2013

REFERENCE APPENDICES

THE BUILDING ENERGY EFFICIENCY STANDARDS FOR RESIDENTIAL AND NONRESIDENTIAL BUILDINGS

JOINT APPENDICES
RESIDENTIAL APPENDICES
NONRESIDENTIAL APPENDICES

EFFECTIVE JANUARY 1, 2014

MAY 2012
CEC-400-2012-005-CMF-REV

CALIFORNIA ENERGY COMMISSION
Edmund G. Brown Jr., Governor

John Laird
Secretary for Natural Resources Agency

CALIFORNIA ENERGY COMMISSION:

Robert Weisenmiller, Ph.D.
Chairman

Commissioners:
Andrew McAlister
Karen Douglas, J.D.
David Hochschild
Janea A. Scott, J.D.

Robert P. Oglesby
Executive Director

David Ashuckian
Deputy Director
Efficiency and Renewable Energy Division

Bill Pennington
Deputy Division Chief
Efficiency and Renewable Energy Division

Eurlyne Geiszler
Office Manager
High Performance Buildings Office

Project Managers:
Maziar Shirakh, P.E.
Martha Brook, P.E.
High Performance Buildings Office

Acknowledgments

The Building Energy Efficiency Standards (Standards) were first adopted and put into effect in 1978 and have been updated periodically in the intervening years. The Standards are a unique California asset and have benefitted from the conscientious involvement and enduring commitment to the public good of many persons and organizations along the way. The 2013 Standards development and adoption process continued that long-standing practice of maintaining the Standards with technical rigor, challenging but achievable design and construction practices, public engagement and full consideration of the views of stakeholders.

The 2013 Standards revision and the supporting documents were conceptualized, evaluated and justified through the excellent work of Energy Commission staff and consultants working under contract to the Energy Commission, Pacific Gas and Electric Company, Southern California Edison Company, San Diego Gas and Electric Company, and Southern California Gas Company. At the Energy Commission, Maziar Shirakh, P.E.; and Martha Brook, P.E. served as the project managers and senior engineers. Bill Pennington, Deputy Division Chief of the Efficiency and Renewable Energy Division, provided overall guidance to the staff and consultants. Eurlyne Geiszler served as the Office Manager for the High Performance Buildings Office. Pippin Brehler and Kristen Driskell provided legal counsel to the staff. This document was created with the technical assistance from Martha Brook, PE, Sabaratnam Thamilseran, PE, David Ware; Nelson Pena, Rob Hudler; and Owen Howlett. Other key technical staff contributors included, Gary Flamm; Patrick Saxton P.E.; Jeff Miller, P.E.; Payam Bozorgchami, P.E.; Tav Commins; and Mark Alatorre. Additional staff input and assistance came from Ron Yasny; the Energy Hotline staff; and the Energy Commission's Web Team. Critical support for the staff in conceptualizing, evaluating, and reviewing this document came from Architectural Energy Corporation, L'Monte Information Services, Gard Analytics, National Renewable Energy Laboratory, Hitchcock consulting, 360 Analytics, Wrightsoft Corporation, Taylor Engineering, McHugh Energy, Gabel Associates, Energy Solutions, E3, PECI, and the Heschong Mahone Group.

The authors are grateful to the many people and organizations that contributed to the development and production of the Standards and the supporting documents. The documents reflect, to a large extent, the comments made by the many people who took time to carefully review earlier versions. Reviewers who significantly contributed to the content include members of CABEC and CALBO. Special thanks go to Panama Bartholomy, the former Deputy Director Efficiency and Renewable Energy Division for his vision and support of the 2013 Standards.

The authors are grateful to the many people and organizations that contributed to the development and production of the Standards and the supporting documents. The documents reflect, to a large extent, the comments made by the many people who took time to carefully review earlier versions. Reviewers who significantly contributed to the content include members of CABEC and CALBO. Special thanks go to Panama Bartholomy, the former Deputy Director Efficiency and Renewable Energy Division for his vision and support of the 2013 Standards.

The Energy Commission dedicates the adoption of the 2013 Building Energy Efficiency Standards to ***Valerie T. Hall****, (November 28, 1952 - December 21, 2010), Deputy Director of the Efficiency and Renewable Energy Division for her more than 32 years of dedication to excellence in the development and implementation of energy efficiency programs in California with the most aggressive energy efficient building standards in the country and for being a model for others to follow.*

ABSTRACT

Public Resources Code Sections 25402 and 25402.1 were enacted in 1975 as part of the enabling legislation establishing the California Energy Commission and its basic mandates. These sections require the Energy Commission to adopt, implement, and periodically update energy efficiency standards for both residential and nonresidential buildings.

The Standards must be cost effective based on the life cycle of the building, must include performance and prescriptive compliance approaches, and must be periodically updated to account for technological improvements in efficiency technology. Accordingly, the California Energy Commission has adopted and periodically updated the Standards (codified in Title 24, Part 6 of the California Code of Regulations) to ensure that building construction, system design and installation achieve energy efficiency and preserve outdoor and indoor environmental quality. The Standards establish a minimum level of building energy efficiency. A building can be designed to a higher efficiency level, resulting in additional energy savings.

The 2013 Building Energy Efficiency Standards focus on several key areas to improve the energy efficiency of newly constructed buildings and additions and alterations to existing buildings, and include requirements that will enable both demand reductions during critical peak periods and future solar electric and thermal system installations. The most significant efficiency improvements to the residential Standards are proposed for windows, envelope insulation and HVAC system testing. The most significant efficiency improvements to the nonresidential Standards are proposed for lighting controls, windows, unitary HVAC equipment and building commissioning. New efficiency requirements for process loads such as commercial refrigeration, data centers, kitchen exhaust systems and compressed air systems are included in the nonresidential Standards. The 2013 Standards include expanded criteria for acceptance testing of mechanical and lighting systems, as well as new requirements for code compliance data to be collected in a California Energy Commission-managed repository.

The 2013 Standards also include updates to the energy efficiency divisions of the California Green Building Code Standards (Title 24, Part 11). A set of prerequisites has been established for both the residential and nonresidential Reach Standards, which include efficiency measures that should be installed in any building project striving to meet advanced levels of energy efficiency. The residential Reach Standards have also been updated to require additional energy efficiency or on-site renewable electricity generation to meet a specific threshold of expected electricity use. Both the residential and nonresidential Reach Standards include requirements for additions and alterations to existing buildings.

Energy Commission staff estimates that the implementation of the 2013 Building Energy Efficiency Standards may reduce statewide annual electricity consumption by approximately 613 gigawatt-hours per year, electrical peak demand by 195 megawatts, and natural gas consumption by 10 million therms per year. The potential effect of these energy savings to air quality may be a net reduction in the emission of nitric oxide by approximately 59 tons per year,

sulfur oxides by 2.4 tons per year, carbon monoxide by 41 tons per year and particulate matter less than 2.5 microns in diameter by 10 tons per year. Additionally, Energy Commission staff estimates that the implementation of the 2013 Standards may reduce statewide carbon dioxide equivalent emissions by 215 thousand metric tons per year.

Energy Commission staff have completed an analysis of the environmental impacts of the proposed 2013 Building Energy Efficiency Standards for residential and nonresidential buildings. In addition to air emissions, issues of on-site water use, indoor air pollution and changes in materials use including: Mercury, Lead, Cooper, Steel, Plastic Silicon, Gold, Aluminum, Fiber Glass, Titanium, Glass and Wood were considered. It is the opinion of Energy Commission staff that the potential environmental impacts that may be associated with the implementation of the 2013 Building Energy Efficiency Standards are less than significant. Therefore, Energy Commission staff recommends the adoption of a Negative Declaration for the 2013 Building Energy Efficiency Standards.

Key Words:
California Energy Commission,
California Building Energy Efficiency Standards
Title 24, Part 6
2013 Building Energy Efficiency Standards
California Green Building Code Standards
Title 24, Part 11
Negative Declaration
Residential
Nonresidential
Newly Constructed
Additions and Alterations to Existing Buildings
Mandatory
Prescriptive
Performance
Windows
Envelope Insulation
HVAC
Building Commissioning
Process Load
Commercial Refrigeration
Data Center
Kitchen Exhaust
Compressed Air
Acceptance Testing
Data Collection
Cool Roof

Reach Standards
On-site Renewable Electricity Generation
Giga-watt hours
Mega-Watt
Therms per year
Nitric Oxides
Sulfur Oxides
Carbon Monoxide
Carbone Dioxide Equivalent
NOx
SOx
CO
PM2.5
CO2e
Mercury
Lead
Cooper
Steel
Plastic
Silicon
Gold
Aluminum
Fiber Glass
Titanium
Glass
Wood
Time Dependent Valuation
TDV

2013 REFERENCE APPENDICES
TABLE OF CONTENTS

Joint Appendices

JA1 – Glossary
JA2 – Reference Weather/Climate Data
JA3 – Time Dependent Valuation (TDV)
JA4 – U-factor, C-factor, and Thermal Mass Data
JA5 – Technical Specifications For Occupant Controlled Smart Thermostats
JA6 – HVAC System Fault Detection and Diagnostic Technology
JA7 – Data Registry Requirements
JA8 – Qualification Requirements for Residential Luminaires Using LED Light Source
JA9 – Qualification Requirements for Low Leakage Air-Handling Units ....

Residential Appendices

RA1 – Special Case Residential Field Verification and Diagnostic Test Protocols .
RA2 – Residential HERS Verification, Testing, and Documentation Procedures
RA3 – Residential Field Verification and Diagnostic Test Protocols
RA4 – Eligibility Criteria for Energy Efficiency Measures

Nonresidential Appendices

NA1 – Nonresidential HERS Verification, Testing, and Documentation Procedures
NA2 – Nonresidential Field Verification and Diagnostic Test Procedures
NA3 – Fan Motor Efficiencies
NA4 – Compliance Procedures for Relocatable Public School Buildings
NA5 – RESERVED
NA6 – Alternate Default Fenestration Procedure to Calculate Thermal Performance
NA7 – Installation and Acceptance Requirements for Nonresidential Buildings and Covered Procssses
NA8 –Luminaire Power

JOINT APPENDICES

Joint Appendix JA

Table of Contents

Appendix JA1 – Glossary **5**

Appendix JA2 – Reference Weather/Climate Data **1**

JA2.1 Weather Data - General 2

JA2.1.1 Counties and Cities with Climate Zone Designations 3

JA2.2 California Design Location Data 31

Appendix JA3 – Time Dependent Valuation (TDV) **1**

JA3.1 Scope and Purpose 1

JA3.2 Summary of Data 1

Appendix JA4 – U-factor, C-factor, and Thermal Mass Data **1**

4.1 Scope and Purpose 2

JA4.1.1 Introduction 2

JA4.1.2 California Energy Commission Approved Software 3

JA4.1.3 Tapered Insulation 7

JA4.1.4 Insulating Layers on Mass and Other Walls 7

JA4.1.5 Wood Based Sheathing R-values 7

JA4.1.6 Framing Percentages for Calculating U-factors 8

JA4.1.7 R-values and U-factors for Medium-Density Closed Cell and Low-Density Open Cell Spray Polyurethane Foam (SPF) Insulation: 9

JA4.2 Roofs and Ceilings 11

JA4.3 Walls 31

4.4 Floors and Slabs 60

JA4.5 Miscellaneous Construction 73

JA4.6 74

Appendix JA5 - Technical Specifications For Occupant Controlled Smart Thermostats **1**

JA5.1 Introduction 2

JA5.2 Required Functional Resources 2

JA5.2.1 Setback Capabilities 2

JA5.2.2 Communication Capabilities 2

JA5.2.3 OCST Messages and Attributes 3

JA5.2.4 Event Response 3

JA5.2.5 Other Required Capabilities 4

JA5.3 Functional Descriptions 4

JA5.3.1 Communications Interface 4

JA5.3.2 Expansion/Communication Port 4
JA5.3.3 Onboard Communications Devices 5
JA5.3.4 User Display and Interface 5
JA5.3.5 Required Functional Behavior 5
JA5.3.6 Restoring Factory Installed Default Settings 6
JA5.3.7 Security 7
JA5.4 The HVAC System Interface 7
JA5.5 Terminology 7
Appendix JA6 – HVAC System Fault Detection and Diagnostic Technology 1
JA6.1 Charge Indicator Display (CID) 2
JA6.1.1 Purpose and Scope 2
JA6.1.2 CID Product Approval 2
JA6.1.3 CID Installation 2
JA6.1.4 CID Product Documentation 2
JA6.1.5 Optional Fault Detection Capabilities 2
JA6.1.6 Requirements for a Charge Indicator Display 2
JA6.2 Saturation Pressure Measurement Sensors 7
JA6.2.1 Purpose and Scope 7
JA6.2.2 SPMS Device Approval 7
JA6.2.3 Standard for Saturation Pressure Measurement Sensors 7
Appendix JA7 – Data Registry Requirements 1
JA7.1 Purpose and Scope 3
JA7.2 Definitions 4
JA7.3 Introduction 8
JA7.4 Roles and Responsibilities, and Authorized Users 9
JA7.4.1 Registration Provider 9
JA7.4.2 Authorized Users 9
JA7.4.3 View-Only Authorized User 9
JA7.4.4 Documentation Author 10
JA7.4.5 Field Technician 10
JA7.4.6 Registration Signer (Responsible Person) 10
JA7.4.7 Enforcement Agency 10
JA7.5 Document Registration Requirements 12
JA7.5.1 Overview 12
JA7.5.2 Document Appending 12
JA7.5.3 Data Validation for Compliance Document Registration 13
JA7.5.4 Registration Numbering Conventions 14

JA7.5.5 Verification of Authenticity of Copies of Registered Documents 16
JA7.5.6 Project Document Configuration 16
JA7.5.7 Certificate of Compliance Requirements 18
JA7.5.8 Certificate of Installation Requirements 18
JA7.5.9 Certificate of Verification Requirements 19
JA7.5.10 Certificate of Acceptance Requirements 20
JA7.6 Electronic and Digital Signature Requirements 21
JA7.6.1 Introduction 21
JA7.6.2 Overall Description 21
JA7.6.3 Specific requirements 23
JA7.7 Data Exchange Requirements 28
JA7.7.1 Data Exchange Requirements for Document Registration 28
JA7.8 Data Registry Approval 30
JA7.8.1 Overview 30
JA7.8.2 Application Checklist 30
JA7.8.3 Types of Approval 31
JA7.8.4 Rescinding Approval (Deactivation) of Data Registries 32
JA7.8.5 Data Registry User Manual 33
JA7.9 Approval of Software Used for Data Input to Data Registries 34
JA7.9.1 Overview 34
JA7.9.2 Application Checklist 35
JA7.9.3 Types of Approval 35
JA7.9.4 Rescinding Approval (Deactivation) of Software 36
JA7.9.5 Software User Manual 38
JA7.10 Related Publications 38
Appendix JA8 – Qualification Requirements for Residential Luminaires Using LED Light Source 1
Appendix JA9 – Qualification Requirements for Low Leakage Air-Handling Units 1
JA9.1 Purpose and Scope 1
JA9.2 Qualification Requirements 1
JA9.2.1 Method of Test 1
JA9.2.2 Testing Laboratory Requirements 1
JA9.2.3 Nominal Air-Handling Unit Airflow 1
JA9.2.4 Leakage Criterion for Qualification 2

Joint Appendix JA1

Appendix JA1 – Glossary

ACCA is the Air Conditioning Contractors of America

ACCA MANUAL J is the Air Conditioning Contractors of America document titled "Manual J - Residential Load Calculation" (ANSI/ACCA 2 Manual J – 2006).

ACCEPTANCE REQUIREMENTS FOR CODE COMPLIANCE is a description of test procedures in the Reference Nonresidential Appendices that includes equipment and systems to be tested, functions to be tested, conditions under which the test shall be performed, the scope of the tests, results to be obtained, and measurable criteria for acceptable performance.

ACCESSIBLE is having access thereto, but which first may require removal or opening of access panels, doors, or similar obstructions.

ACM See Alternative Calculation Method.

ACP See Alternative Component Package.

ADDITION is any change to a building that increases conditioned floor area and conditioned volume. Addition is also any change that increases the floor area and volume of an unconditioned building of an occupancy group or type regulated by Part 6. Addition is also any change that increases the illuminated area of an outdoor lighting application regulated by Part 6.

AFUE See Annual Fuel Utilization Efficiency.

AGRICULTURAL BUILDING is a structure designed and constructed to house farm implements, hay, grain, poultry, livestock or other horticultural products. It is not a structure that is a place of human habitation, a place of employment where agricultural products are processed, treated or packaged, or a place used by the public.

AIR BARRIER is combination of interconnected materials and assemblies joined and sealed together to provide a continuous barrier to air leakage through the building envelope that separates conditioned from unconditioned space, or adjoining conditioned spaces of different occupancies or uses.

AIR CONDITIONER is an appliance that supplies cooled and dehumidified air to a space for the purpose of cooling objects within the space.

AIR-COOLED AIR CONDITIONER is an air conditioner using an air-cooled condenser.

AIR-HANDLING UNIT or AIR HANDLER is a blower or fan that distributes supply air to a room, space, or area.

AIR FILTER EQUIPMENT or AIR FILTER DEVICE is air-cleaning equipment used for removing particulate matter from the air.

AIR FILTER MEDIA is the part of the air filter equipment, that is the actual particulate removing agent.

AIR LEAKAGE Is a measure of how much outside air comes into a home or building through a manufactured fenestration or exterior door products.

AIR POROSITY is a measure of the air-tightness of infiltration barriers in units of cubic feet per hour per square foot per inch of mercury pressure difference.

AIRFLOW ACROSS THE EVAPORATOR is the rate of airflow, usually measured in cfm across a heating or cooling coil. The efficiency of air conditioners and heat pumps is affected by the airflow across the evaporator (or condenser in the case of a heat pump).

AIR-TO-AIR HEAT EXCHANGER is a device which will reduce the heat losses or gains that occur when a building is mechanically ventilated, by transferring heat between the conditioned air being exhausted and outside air being supplied.

AIR-SOURCE HEAT PUMP is an appliance that consists of one or more factory-made assemblies that includes an indoor conditioning coil, a compressor and a refrigerant-to-air heat exchanger, and that provides heating and cooling functions.

ALTERATION is any change to a building's water-heating system, space-conditioning system, lighting system, or envelope that is not an addition. Alteration is also any change that is regulated by Part 6 to an outdoor lighting system that is not an addition. Alteration is also any change that is regulated by Part 6 to signs located either indoors or outdoors.

ALTERED COMPONENT is a component that has undergone an alteration and is subject to all applicable Standards requirements.

ALTERNATIVE CALCULATION METHOD (ACM) APPROVAL MANUAL or ACM APPROVAL MANUAL are the document that establishes the requirements for Energy Commission approval of performance software used to demonstrate compliance with the Building Energy Efficiency Standards for Residential and Nonresidential Buildings, Published by the California Energy Commission.

ALTERNATIVE CALCULATION METHOD (ACM) REFERENCE MANUAL or ACM REFERENCE MANUAL contains the specific procedures to implement Sections 140.1 and 150.1 of Title 24, Part 6 of the California Code of Regulations in Compliance Software.

ALTERNATIVE CALCULATION METHODS (ACM) are the Commission's Public Domain Computer Programs, one of the Commission's Simplified Calculation Methods, or any other calculation method approved by the Commission. ACMs are also referred to as compliance software.

ALTERED COMPONENT is a component that has undergone an alteration and is subject to all applicable Standards requirements.

ALTERNATIVE COMPONENT PACKAGE is a set of building measures whose aggregate calculated energy use is less than or equal to the maximum allowed Energy Budget.

ANNUAL FUEL UTILIZATION EFFICIENCY (AFUE) is a measure of the percentage of heat from the combustion of gas or oil which is transferred to the space being heated during a year, as determined using the applicable test method in the Appliance Efficiency Regulations or §110.2.

ANNUNCIATED is a type of visual signaling device that indicates the on, off, or other status of a load.

ANSI is the American National Standards Institute.

ANSI C82.6-2005 is the American National Standards Institute document titled “Ballasts for High-Intensity Discharge Lamps – Methods of Measurement” (ANSI C82.6-2005).

ANSI/IES RP-16-10 is the document coauthored by the American National Standards Institute and the Illuminating Engineering Society of North America, Recommended Practice titled "Nomenclature and Definitions for Illuminating Engineering."

ANSI Z21.10.3 is the American National Standards Institute document titled “Gas Water Heaters - Volume III, Storage Water Heaters With Input Ratings Above 75,000 Btu Per Hour,” 2011 (ANSI Z21.10.3-2011/CSA 4.3-2011).

ANSI Z21.13 is the American National Standards Institute document titled “Gas-Fired Low Pressure Steam and Hot Water Boilers,” 2010 (ANSI Z21.13-2010/CSA 4.9-2010).

ANSI Z21.40.4A is the American National Standards Institute document titled “Addenda 1 to ANSI Z21.40.4-1996/CGA 2.94-M96, Performance Testing and Rating of Gas-Fired, Air Conditioning and Heat Pump Appliances,” 1998 (ANSI Z21.40.4-1998/CGA 2.94A-M98).

ANSI Z21.47 is the American National Standards Institute document titled “Gas-Fired Central Furnaces,” 2006 (ANSI Z21.47-2006/CSA 2.3-2006).

ANSI Z83.8 is the American National Standards Institute document titled “American National Standard/CSA Standard For Gas Unit Heaters, Gas Packaged Heaters, Gas Utility Heaters and Gas-Fired Duct Furnaces,” 2009 (ANSI Z83.8 -2009/CSA 2.6-2009).

APPLIANCE EFFICIENCY REGULATIONS are the regulations in Title 20, Section 1601 et seq. of the California Code of Regulations.

APPLIANCE STANDARDS are the Standards contained in the Appliance Efficiency Regulations.

APPROVED as to a home energy rating provider or home energy rating system, is reviewed and approved by the Commission under Title 20, Section 1675 of the California Code of Regulations.

APPROVED BY THE COMMISSION means approval under Section 25402.1 of the Public Resources Code.

APPROVED CALCULATION METHOD is compliance software, or alternative component packages, or exceptional methods approved under Section 10-109.

AREAL HEAT CAPACITY See Heat Capacity.

AHRI is the Air-Conditioning, Heating and Refrigeration Institute.

AHRI 210/240 is the Air-conditioning, Heating, and Refrigeration Institute document titled “Performance Rating of Unitary Air-Conditioning and Air-Source Heat Pump Equipment,” 2008 (ANSI/AHRI Standard 210/240-2008 with Addenda 1 and 2).

ANSI/AHRI/CSA 310/380 is the Air-Conditioning, Heating, and Refrigeration Institute document titled “Standard for Packaged Terminal Air-Conditioners and Heat Pumps (CSA-C744-04),” 2004 (ANSI/AHRI/CSA Standard 310/380-2004).

AHRI 320 is the Air-Conditioning, Heating and Refrigeration Institute document titled “Water-Source Heat Pumps,” 1998 (AHRI Standard 320-1998).

AHRI 325 is the Air-Conditioning, Heating and Refrigeration Institute document titled “Ground Water-Source Heat Pumps,” 1998 (ARI Standard 325-1998).

ANSI/AHRI 340/360 is the Air-Conditioning, Heating and Refrigeration Institute document titled “Performance Rating of Commercial and Industrial Unitary Air-Conditioning and Heat Pump Equipment,” 2007 (ANSI/AHRI Standard 340/360-2007 with Addenda 1 and 2).

ANSI/AHRI 365 is the Air-Conditioning, Heating and Refrigeration Institute document titled "Commercial and Industrial Unitary Air-Conditioning Condensing Units," 2009 (ANSI/AHRI Standard 365 (I-P)-2009).

ANSI/AHRI 390 is the Air-Conditioning, Heating and Refrigeration Institute document titled "Performance Rating of Single Package Vertical Air-Conditioners and Heat Pumps," 2003 (ANSI/AHRI Standard 390 (I-P)-2003).

ANSI/AHRI 400 is the Air-Conditioning, Heating and Refrigeration Institute document titled "Liquid to Liquid Heat Exchangers," 2001 (ANSI/AHRI Standard 400 (I-P)-2001) with addenda 1 and 2.

ANSI/AHRI 460 is the Air-Conditioning, Heating and Refrigeration Institute document titled “Performance Rating of Remote Mechanical-Draft Air-Cooled Refrigerant Condensers,” 2005 (ANSI/AHRI Standard 460-2005).

AHRI 550/590 is the Air-Conditioning, Heating and Refrigeration Institute document titled “Performance Rating of Water Chilling Packages Using the Vapor Compression Cycle,” 2011 (AHRI Standard 550/590-(I-P)-2011).

ANSI/AHRI 560 is the Air-Conditioning, Heating and Refrigeration Institute document titled “Absorption Water Chilling and Water Heating Packages,” 2000 (ANSI/AHRI Standard 560-2000).

AHRI 680 is the Air-Conditioning, Heating and Refrigeration Institute document titled “Performance Rating of Residential Air Filter Equipment,” 2009 (ANSI/AHRI Standard 680).

AHRI 1230 is the Air-Conditioning, Heating and Refrigeration Institute document titled “Performance Rating of Variable Refrigerant Flow (VRF) Multi-Split Air-Conditioning and Heat Pump Equipment,” 2010 (AHRI Standard 1230-2010) with Addendum 1.

ASHRAE is the American Society of Heating, Refrigerating, and Air-conditioning Engineers.

ASHRAE CLIMATIC DATA FOR REGION X is the American Society of Heating, Refrigerating and Air-Conditioning Engineers document titled "ASHRAE Climatic Data for Region X, Arizona, California, Hawaii and Nevada," Publication SPCDX, 1982 and "Supplement," 1994.

ASHRAE HANDBOOK, APPLICATIONS VOLUME is the American Society of Heating, Refrigerating and Air-Conditioning Engineers document titled "ASHRAE Handbook: Heating, Ventilating, and Air-Conditioning Applications" (2011).

ASHRAE HANDBOOK, EQUIPMENT VOLUME is the American Society of Heating, Refrigerating and Air-Conditioning Engineers document titled "ASHRAE Handbook: Heating, Ventilating, and Air-Conditioning Systems and Equipment" (2008).

ASHRAE HANDBOOK, FUNDAMENTALS VOLUME is the American Society of Heating, Refrigerating and Air-Conditioning Engineers document titled "ASHRAE Handbook: Fundamentals" (2009).

ASHRAE STANDARD 52.2 is the American Society of Heating, Refrigerating and Air-Conditioning Engineers document titled "Method of Testing General Ventilation Air-Cleaning Devices for Removal Efficiency by Particle Size," 2007 (ANSI/ASHRAE Standard 52.2-2007 including ANSI/ASHRAE Addendum b to ANSI/ASHRAE Standard 52.2-2007).

ASHRAE STANDARD 55 is the American Society of Heating, Refrigerating and Air-Conditioning Engineers document titled " Thermal Environmental Conditions for Human Occupancy," 2010 (ASHRAE Standard 55-2010).

ASHRAE STANDARD 62.2 is the American Society of Heating, Refrigerating and Air-Conditioning Engineers document titled "Ventilation and Acceptable Indoor Air Quality in Low-Rise Residential Buildings," 2010 (ANSI/ASHRAE Standard 62.2-2010 including ANSI/ASHRAE Addenda b, c, e, g, h, i and l to ANSI/ASHRAE 62.2-2010 published in the 2011 supplement, and ANSI/ASHRAE Addendum j to ANSI/ASHRAE Standard 62.2-2010 published in March, 2012, and ANSI/ASHRAE Addendum n to ANSI/ASHRAE Standard 62.2-2010 published in February, 2012).

ASHRAE STANDARD 193 is the American Society of Heating, Refrigerating and Air-Conditioning Engineers document titled "Method of Test for Determining the Airtightness of HVAC Equipment," 2010 (ANSI/ASHRAE Standard 193-2010).

ASME is the American Society of Mechanical Engineers.

ASME A112.18.1/CSA B125.1 is the American Society of Mechanical Engineers document titled "Plumbing Fixture Fittings" 2011 (ASME Standard A112.18.1-2011/CSA B125.1-11).

ASTM is the American Society for Testing and Materials / International.

ASTM C1167 is the American Society for Testing and Materials document titled "Standard Specification for Clay Roof Tiles," 2011 (ASTM C1167-11).

ASTM C1371 is the American Society for Testing and Materials document titled "Standard Test Method for Determination of Emittance of Materials Near Room Temperature Using Portable Emissometers," 1998 (ASTM C1371-98).

ASTM C1492 is the American Society for Testing and Materials document entitled "Standard Specification for Concrete Roof Tile," 2009 (ASTM C1492-03(2009)).

ASTM C1583 is the American Society of Testing and Materials document titled, "Standard Test Method for Tensile Strength of Concrete Surfaces and the Bond Strength or Tensile Strength of Concrete Repair and Overlay Materials by Direct Tension (Pull-off Method)," 2004 (ASTM C1583-04).

ASTM C177 is the American Society for Testing and Materials document titled "Standard Test Method for Steady-State Heat Flux Measurements and Thermal Transmission Properties by Means of the Guarded-Hot-Plate Apparatus," 1997 (ASTM C177-97).

ASTM C272 is the American Society for Testing and Materials document titled "Standard Test Method for Water Absorption of Core Materials for Structural Sandwich Constructions," 2001 (ASTM C272-01).

ASTM C335 is the American Society for Testing and Materials document titled “Standard Test Method for Steady-State Heat Transfer Properties of Horizontal Pipe Insulation,” 1995 (ASTM C335-95).

ASTM C518 is the American Society for Testing and Materials document titled “Standard Test Method for Steady-State Thermal Transmission Properties by Means of the Heat Flow Meter Apparatus,” 2002 (ASTM C518-02).

ASTM C55 is the American Society for Testing and Materials document titled “Standard Specification for Concrete Brick,” 2001 (ASTM C55-01).

ASTM C731 is the American Society for Testing and Materials document titled “Standard Test Method for Extrudability, After Package Aging of Latex Sealants,” 2000 (ASTM C731-00).

ASTM C732 is the American Society for Testing and Materials document titled “Standard Test Method for Aging Effects of Artificial Weathering on Latex Sealants,” 2001 (ASTM C732-01).

ASTM C836 is the American Society of Testing and Materials document titled, “Standard Specification for High Solids Content, Cold Liquid-Applied Elastomeric Waterproofing Membrane for Use with Separate Wearing Course,” 2005 (ASTM C836-05).

ASTM C1549 is the American Society for Testing and Materials document entitled, "Standard Test Method for Determination of Solar Reflectance Near Ambient Temperature Using a Portable Solar Reflectometer,"2004 (ASTM C1549-04).

ASTM D1003 is the American Society for Testing and Materials document titled “Standard Test Method for Haze and Luminous Transmittance of Transparent Plastics,” 2000 (ANSI/ASTM D1003-00).

ASTM D1653 is the American Society of Testing and Materials document titled, “Standard Test Methods for Water Vapor Transmission of Organic Coating Films,” 2003 (ASTM D1653-03).

ASTM D2370 is the American Society of Testing and Materials document titled, “Standard Test Method for Tensile Properties of Organic Coatings,” 2002 [ASTM D2370-98 (2002)].

ASTM D2824 is the American Society of Testing and Materials document titled “Standard Specification for Aluminum-Pigmented Asphalt Roof Coatings, Nonfibered, Asbestos Fibered, and Fibered without Asbestos,” 2002 (ASTM D2824-02).

ASTM D3468 is the American Society of Testing and Materials document titled, “Standard Specification for Liquid-Applied Neoprene and Chlorosulfonated Polyethylene Used in Roofing and Waterproofing,” 1999 (ASTM D3468-99).

ASTM D3805 is the American Society of Testing and Materials document titled “Standard Guide for Application of Aluminum-Pigmented Asphalt Roof Coatings,” 1997 (ASTM D3805-97 (reapproved 2003)).

ASTM D4798 is the American Society for Testing and Materials document titled “Standard Test Method for Accelerated Weathering Test Conditions and Procedures for Bituminous Materials (Xenon-Arc Method),” 2001 (ASTM D4798-01).

ASTM D522 is the American Society of Testing and Materials document titled, “Standard Test Methods for Mandrel Bend Test of Attached Organic Coatings,” 2001 [ASTM D522-93a (2001)].

ASTM D5870 is the American Society of Testing and Materials document titled, “Standard Practice for Calculating Property Retention Index of Plastics,” 2003 [ASTM D5870-95 (2003)].

ASTM D6083 is the American Society of Testing and Materials document titled, “Standard Specification for Liquid Applied Acrylic Coating Used in Roofing,” 2005 (ASTM D6083-05e1).

ASTM D6694 is the American Society of Testing and Materials document titled, “Standard Specification for Liquid-Applied Silicone Coating Used in Spray Polyurethane Foam Roofing,” 2001 (ASTM D6694-01).

ASTM D6848 is the American Society of Testing and Materials document titled “Standard Specification for Aluminum-Pigmented Emulsified Asphalt Used as a Protective Coating for Roofing,” 2002 (ASTM D6848-02).

ASTM D822 is the American Society of Testing and Materials document titled, “Standard Practice for Filtered Open-Flame Carbon-Arc Exposures of Paint and Related Coatings,” 2001 (ASTM D822-01).

ASTM E96 is the American Society for Testing and Materials document titled “Standard Test Methods for Water Vapor Transmission of Materials,” 200 (ASTM E96-00).

ASTM E283 is the American Society for Testing and Materials document titled “Standard Test Method for Determining the Rate of Air Leakage Through Exterior Windows, Curtain Walls, and Doors Under Specified Pressure Differences Across the Specimen,” 1991 (ASTM E283-91(1999)).

ASTM E408 is the American Society for Testing and Materials document titled, “Standard Test Methods for Total Normal Emittance of Surfaces Using Inspection-Meter Techniques,” 1971 (ASTM E408-71(2002)).

ASTM E972 is the American Society for Testing and Materials document titled, "Standard Test Method for Solar Photometric Transmittance of Sheet Materials Using Sunlight,"1996 (ASTM E972-96(2007)).

ASTM E1918 is the American Society for Testing and Materials document entitled, "Standard Test Method for Measuring Solar reflectance of Horizontal and Low-Sloped Surfaces in the Field,"2006 (ASTM E972-06).

ASTM E2178-03 is the American Society for Testing and Materials document titled, "Standards Test Method for Air Permeance of Building Materials.

ASTM E2357-11 is the American Society for Testing and Materials document titled, "Standard Test Method for determining air leakage of air barrier assemblies.

ATTIC is an enclosed space directly below the roof deck and above the ceiling beams.

AUTO REPAIR See Nonresidential Functional Area or Type of Use.

AUTOMATED TELLER MACHINE (ATM) is any electronic information processing device which accepts or dispenses currency in connection with a credit, deposit, or convenience account without involvement by a clerk.

AUTOMATIC is capable of operating without human intervention.

BACK is the back side of the building as one faces the front façade from the outside (see Front). This designation is used on the Certificate of Compliance (CF-1R form) to indicate the orientation of fenestration (e.g., Back-West).

BELOW-GRADE WALL is the portion of a wall, enclosing conditioned space that is below the grade line.

BRITISH THERMAL UNIT (BTU) is the amount of heat needed to raise the temperature of one pound of water one degree Fahrenheit.

BTU/H is the amount of heat in Btu that is removed or added during one hour. Used for measuring heating and cooling equipment output.

BUBBLE POINT is the liquid saturation temperature of a refrigerant at a specified pressure.

BUILDER is the general contractor responsible for construction.

BUILDING is any structure or space covered by Section 100.0 of the Building Energy Efficiency Standards.

BUILDING COMMISSIONING is a systematic quality assurance process that spans the entire design and construction process, including verifying and documenting that building systems and components are planned, designed, installed, tested, operated and maintained to meet the owner’s project requirements.

BUILDING ENERGY EFFICIENCY STANDARDS are the California Building Energy Efficiency Standards as set forth in the California Code of Regulations, Title 24, Part 6. Also known as the California Energy Code.

BUILDING ENVELOPE is the ensemble of exterior and demising partitions of a building that enclose conditioned space.

BUILDING LOCATION DATA is the specific outdoor design temperatures shown in Reference Joint Appendix JA2 used in calculating heating and cooling loads for the particular location of the building.

BUILDING OWNER is the owner of the building or dwelling unit.

BUILDING PERMIT is an electrical, plumbing, mechanical, building, or other permit or approval, that is issued by an enforcement agency, and that authorizes any construction that is subject to Part 6.

BUILDING TYPES is the classification of buildings defined by the CBC and applicable to the requirements of the Building Energy Efficiency Standards.

CALIFORNIA ELECTRICAL CODE is the 2007 California Electrical Code.

CALIFORNIA ENERGY CODE See Building Energy Efficiency Standards.

CALIFORNIA ENERGY COMMISSION Is the California State Energy Resources Conservation and Development Commission.

CALL CENTER is a phone center that handles large number of phone calls including but not limited to help desk, customer and sales support, technical support, emergency response, telephone answering service, and inbound and outbound telemarketing.

CBC is the 2007 California Building Code.

CEILING is the interior upper surface of a space separating it from an attic, plenum, indirectly or directly conditioned space or the roof assembly, which has a slope less than 60 degrees from horizontal.

CENTRAL FAN-INTEGRATED VENTILATION SYSTEM is a central forced air heating and/or cooling system which is intended to operate on a regular basis to bring in outdoor ventilation air and/or distribute air around the home for comfort and ventilation even when heating and cooling are not needed.

CERTIFICATE OF COMPLIANCE is a document with information required by the Commission that is prepared by the Documentation Author that indicates whether the building includes measures that require field verification and diagnostic testing.

CERTIFICATE OF INSTALLATION is a document with information required by the Commission that is prepared by the builder or installer verifying that the measure was installed to meet the requirements of the Standards.

CERTIFICATE OF VERIFICATION is a document with information required by the Commission that is prepared by the HERS Rater to certify that measures requiring field verification and diagnostic testing comply with the requirements.

CERTIFICATION is certification by the manufacturer to the Commission, as specified the Appliance Efficiency Regulations, that the appliance complies with the applicable standard for that appliance. The term certification is also used in other ways in the standards. Many of the compliance forms are certificates, whereby installers, HERS testers and others certify that equipment was correctly installed and/or tested.

CERTIFIED as to a home energy rater, is having been found by a certified home energy rating provider to have successfully completed the requirements established by that home energy rating provider.

CERTIFIED TO THE ENERGY COMMISSION means certified by the manufacturer in a declaration, executed under penalty of perjury of the laws of California, that all the information provided in the statement is true, complete, accurate and in compliance with all applicable provisions of Part 6; and the equipment, product, or device was tested under the applicable test method specified in Part 6.

CERTIFYING ORGANIZATION is an independent organization recognized by the Commission to certify manufactured devices for performance values in accordance with procedures adopted by the Commission.

CLIMATE ZONES are the 16 geographic areas of California for which the Commission has established typical weather data, prescriptive packages and energy budgets. Climate zones are defined by ZIP code and listed in Reference in Joint Appendix JA2 FIGURE 100.1-A is an approximate map of the 16 climate zones.

CLOSED-CIRCUIT COOLING TOWER is a cooling tower that utilizes indirect contact between a heated fluid, typically water or glycol, and the cooling atmosphere to transfer the source heat load indirectly to the air, essentially combining a heat exchanger and cooling tower into relatively compact device.

CLTD is the Cooling Load Temperature Difference.

CMC is the 2010 California Mechanical Code.

CODES, CALIFORNIA HISTORICAL BUILDING CODE is the California Historical Building Code, California Code of Regulations, Title 24, Part 8 and Part 2 (Chapter 34).

CODES, CBC is the 2010 California Building Code.

CODES, CEC is the 2010 California Electrical Code.

CODES, CMC is the 2010 California Mechanical Code.

CODES, CPC is the 2010 California Plumbing Code.

COEFFICIENT OF PERFORMANCE (COP), COOLING is the ratio of the rate of net heat removal to the rate of total energy input, calculated under designated operating conditions and expressed in consistent units, as determined using the applicable test method in the Appliance Efficiency Regulations or §110.2.

COEFFICIENT OF PERFORMANCE (COP), HEAT PUMP is the ratio of the rate of useful heat output delivered by the complete heat pump unit (exclusive of supplementary heating) to the corresponding rate of energy input, in consistent units and as determined using the applicable test method in Appliance Efficiency Regulations or §110.2.

COEFFICIENT OF PERFORMANCE (COP), HEATING is the ratio of the rate of useful heat output delivered by the complete heat pump unit (exclusive of supplementary heating) to the corresponding rate of energy input, in consistent units, and as determined using the applicable test method in the Appliance Efficiency Regulations or §110.2.

COMBINATION SPACE-HEATING AND WATER-HEATING APPLIANCE is an appliance that is designed to provide both space heating and water heating from a single primary energy source.

COMBINED HYDRONIC SPACE/WATER HEATING SYSTEM is a system which both domestic hot water and space heating is supplied from the same water heating equipment. Combined hydronic space heating may include both radiant floor systems and convective or fan coil systems.

COMBUSTION EFFICIENCY is a measure of the percentage of heat from the combustion of gas or oil that is transferred to the medium being heated or lost as jacket loss.

COMMERCIAL BOILER is a type of boiler with a capacity (rated mazimum input) of 300,000 Btus per hour (Btu/h) or more and serving a space heating or water heating load in a commercial building.

COMMISSION is the California State Energy Resources Conservation and Development Commission.

COMPLEX MECHANICAL SYSTEMS are systems that include 1) fan systems each serving multiple thermostatically controlled zones, or 2) built-up air handler systems (non-unitary or non-packaged HVAC equipment), or 3) hydronic or steam heating systems, or 4) hydronic cooling systems. Complex systems are NOT the following: (a) unitary or packaged equipment listed in Tables 110.2-A, 110.2-B, 110.2-C, and 110.2-E that each serve one zone or (b) two-pipe, heating only systems serving one or more zones.

COMPLIANCE APPROACH is any one of the allowable methods by which the design and construction of a building may be demonstrated to be in compliance with Part 6. The compliance approaches are the performance compliance approach and the prescriptive compliance approach. The requirements for each compliance approach are set forth in §100.0(e)2 of Part 6.

COMPLIANCE DOCUMENTS are any of the documentation specified in §10-103(a) utilized to demonstrate compliance with Part 6 (i.e. Certificate of Compliance, Certificate of Installation, Certificate of Acceptance, and Certificate of Verification).

COMPLIANCE OPTION is a method or procedure for demonstrating compliance with Title 24, Part 6 and Part 11, Division 4.2 and 5.2 of the California Code of Regulations through modifications of approved calculation methods.

COMPLIANCE SOFTWARE is software that has been approved pursuant to Section 10-109 of Part 1 of Title 24 of the California Code of Regulations, to demonstrate compliance with the performance approach of Part 6.

COMPUTER ROOM is a room whose primary function is to house electronic equipment and that has a design equipment power density exceeding 20 watts/ft2 (215 watts/m2) of conditioned floor.

CONDENSER SPECIFIC EFFICIENCY is the full load condenser Total Heat of Rejection (THR) capacity at standardized conditions divided by the fan input electric power (including but not limited to spray pump electric input power for evaporative condensers) at 100% rated fan speed.

CONDITIONED FLOOR AREA (CFA) is the floor area in square feet (ft^2) of enclosed conditioned space on all floors of a building, as measured at the floor level of the exterior surfaces of exterior walls enclosing the conditioned space.

CONDITIONED FOOTPRINT is a projection of all conditioned space on all floors to a vertical plane. The conditioned footprint area may be equal to the first floor area, or it may be greater, if upper floors project over lower floors. One way to think of the conditioned footprint area is as the area of the largest conditioned floor in the building plus the conditioned floor area of any projections from other stories that extend beyond the outline of that largest floor.

CONDITIONED SPACE is space in a building that is either directly conditioned or indirectly conditioned.

CONDITIONED SPACE, DIRECTLY is an enclosed space that is provided with wood heating, is provided with mechanical heating that has a capacity exceeding 10 Btu/hr-ft^2), or is provided with mechanical cooling that has a capacity exceeding 5 Btu/hr-ft^2 unless the space-conditioning system is designed for process load. (See “process load” and “process space”).

CONDITIONED SPACE, INDIRECTLY is enclosed space, including, but not limited to, unconditioned volume in atria, that (1) is not directly conditioned space; and (2) either (a) has a thermal transmittance area product (UA) to directly conditioned space exceeding that to the outdoors or to unconditioned space and does not have fixed vents or openings to the outdoors or to unconditioned space, or (b) is a space through which air from directly conditioned spaces is transferred at a rate exceeding three air changes per hour.

CONDITIONED VOLUME is the total volume in cubic feet (ft^3) of the conditioned space within a building.

CONSTRUCTION LAYERS are roof, wall and floor constructions which represent an assembly of layers. Some layers are homogeneous, such as gypsum board and plywood sheathing, while other layers are non-homogeneous such as the combination of wood framing and cavity insulation typical in many buildings.

CONTINUOUS AIR BARRIER See Air Barrier

CONTINUOUS INSULATION (c.i.) is insulation that is continuous across all assemblies that separate conditioned from unconditioned space. It is installed on the exterior or interior or is integral to any opaque surface of the building envelope and has no thermal bridges other than fasteners and necessary service openings.

CONTROLLED ATMOSPHERE is an airtight space maintained at reduced oxygen levels for the purpose of reducing respiration of perishable product in longterm storage.

CONTROLLED VENTILATION CRAWL SPACE (CVC) is a crawl space in a residential building where the side walls of the crawlspace are insulated rather than the floor above the crawlspace. A CVC has automatically controlled crawl space vents. Credit for a CVC is permitted for low-rise residential buildings that use the performance approach to compliance.

COOLER is a space to be capable of operation at a temperature greater than or equal to 28°F but less than 55°F.

COOL ROOF is a roofing material with high thermal emittance and high solar reflectance, or low thermal emittance and exceptionally high solar reflectance as specified in Part 6 that reduces heat gain through the roof.

COOL ROOF RATING COUNCIL (CRRC) is a not-for-profit organization designated by the Commission as the Supervisory Entity with responsibility to rate and label the reflectance and emittance of roof products.

COOLING COIL AIRFLOW Is the air flow through the evaporator (indoor) coil of a direct expansion air conditioning unit in cooling mode. The air flow is expressed in cubic feet per minute (CFM) or liter per second (L/S) of standard air (standard air has a density of 0.075 lb/ft^3).

COOLING EQUIPMENT is equipment used to provide mechanical cooling for a room or rooms in a building.

COOLING LOAD is the rate at which heat must be extracted from a space to maintain a desired room condition.

COOLING LOAD TEMPERATURE DIFFERENCE (CLTD) is an equivalent temperature difference used for calculating the instantaneous external cooling loads across a wall or roof. The cooling load is the CLTD x U-factor x Area.

COP See Coefficient of Performance.

COURTYARD is an open space through one or more floor levels surrounded by walls within a building.

CRAWL SPACE is a space immediately under the first floor of a building adjacent to grade.

CRRC See Cool Roof Rating Council.

CRRC-1 is the Cool Roof Rating Council document titled “Product Rating Program Manual.” (2002)

CTI is the Cooling Technology Institute.

CTI ATC-105 is the Cooling Technology Institute document titled “Acceptance Test Code for Water Cooling Towers,” 2000 (CTI ATC-105-00).

CTI ATC-105S(11) is the Cooling Technology Institute document titled “Acceptance Test Code for Closed-Circuit Cooling Towers,” 2011 (CTI ATC-105-11).

CTI STD-201 is the Cooling Technology Institute document titled “Standard for Thermal Performance Certification of Evaporative Heat Rejection Equipment,” 2011 (CTI STD-201-11).

CURRENT AIR DEMAND is the actual cubic feet per minute (acfm) of total airflow necessary for end uses in a compressed air system.

CUSTOM ENERGY BUDGET See Energy Budget.

C-VALUE (ALSO KNOWN AS C-FACTOR) is the time rate of heat flow through unit area of a body induced by a unit temperature difference between the body surfaces, in Btu (hr. x ft.2 x °F). It is not the same as K-value or K-factor.

CYCLES OF CONCENTRATION is the number of times the concentration of total dissolved (TDS) in cooling tower water is multiplied relative to the TDS in the makeup water. Because evaporation of pure water leaves dissolved solids behind in the system water, TDS increases over time as the tower operates. The number of times the dissolved minerals are concentrated is relative to the TDS in the makeup water. For example, five cycles of concentration represents five times the concentration of solids in the cooling tower system water relative to the TDS in the makeup water entering the tower.

CRRC-1 is the Cool Roof Rating Council document titled “Product Rating Program.”

DAYLIT ZONE is the floor area under skylights or next to windows. Types of Daylit Zones include Primary Sidelit Daylit Zone, Secondary Sidelit Daylit Zone, Secondary Sidelit Daylit Zone, and Skylit Daylit Zone.

DATA REGISTRY is a web service with a user interface and database maintained by a Registration Provider that complies with the applicable requirements in Reference Joint Appendix JA7, with guidance from the Data Registry Requirements Manual, and provides for registration of residential or nonresidential compliance documentation used for demonstrating compliance with Part 6.

> **RESIDENTIAL DATA REGISTRY** is a data registry that is maintained by a HERS Provider that provides for registration when required by Part 6 of all residential compliance documentation and the nonresidential Certification of Verification.

NONRESIDENTIAL DATA REGISTRY is a data registry that is maintained by the Registration Provider approved by the Commission that provides for registration, when required by Part 6, of all nonresidential documentation. However, nonresidential data registries may not provide for registration of nonresidential Certificate of Verification.

DATA REGISTRY REQUIREMENTS MANUAL is a document that provides additional detailed guidance regarding the functional and technical aspects of the Data Registry requirements given in Reference Joint Appendix JA7.

DEADBAND is the temperature range within which the HVAC system is neither calling for heating or cooling.

DECORATIVE GAS APPLIANCE is a gas appliance that is designed or installed for visual effect only, cannot burn solid wood, and simulates a fire in a fireplace.

DEGREE DAY, HEATING is a unit, based upon temperature difference and time, used in estimating fuel consumption and specifying nominal annual heating load of a building. For any one day, when the mean temperature is less than 65°F, there exist as many degree days as there are Fahrenheit degrees difference in temperature between the mean temperature for the day and 65°F. The number of degree days for specific geographical locations are those listed in the Reference Joint Appendix JA2. For those localities not listed in the Reference Joint Appendix JA2, the number of degree days is as determined by the applicable enforcing agency.

DEMAND RESPONSE is short-term changes in electricity usage by end-use customers from their normal consumption patterns. Demand response may be in response to

(a) a change in the price of electricity; or

(b) participation in programs or services designed to modify electricity use:

1. in response to wholesale market prices; or

2. when system reliability is jeopardized.**DEMAND RESPONSE PERIOD** is a period of time during which electricity loads are modified in response to a demand response signal.**DEMAND RESPONSE SIGNAL** is a signal sent by the local utility, Independent System Operator (ISO), or designated curtailment service provider or aggregator, to a customer, indicating a price or a request to modify electricity consumption, for a limited time period.**DEMAND RESPONSIVE CONTROL** is a kind of control that is capable of receiving and automatically responding to a demand response signal.**DEMISING PARTITION** is a wall, fenestration, floor, or ceiling that separates conditioned space from enclosed unconditioned space.**DEMISING WALL** is a wall that is a demising partition.**DENSITY** is the mass per unit volume of a construction material as documented in an ASHRAE handbook, a comparably reliable reference or manufacturer's literature.**DEPLETABLE SOURCES** is energy obtained from electricity purchased from a public utility, or energy obtained from burning coal, oil, natural gas, or liquefied petroleum gases.**DESIGN CONDITIONS** are the parameters and conditions used to determine the performance requirements of space-conditioning systems. Design conditions for determining design heating and cooling loads are specified in §140.4(b) for nonresidential, high-rise residential, and hotel/motel buildings and in §150.0 (h) for low-rise residential buildings.**DESIGN HEAT GAIN RATE** is the total calculated heat gain through the building envelope under design conditions.**DESIGN HEAT LOSS RATE** is the total calculated heat loss through the building envelope under design conditions.

DESIGN REVIEW is an additional secondary review of the construction documents (drawings and specifications) that seeks to improve compliance with existing Title 24 regulations, encourage adoption of best practices in design, and encourage designs that are constructable and maintainable. It is an opportunity for an experienced design engineer to look at a project with a fresh perspective in an effort to catch missing or unclear design information and to suggest design enhancements.

DEW POINT TEMPERATURE is the vapor saturation temperature at a specified pressure for a substance undergoing phase change from vapor to liquid.

DIRECT DIGITAL CONTROL (DDC) is a type of control where controlled and monitored analog or binary data, such as temperature and contact closures, are converted to digital format for manipulation and calculations by a digital computer or microprocessor, then converted back to analog or binary form to control mechanical devices.

DIRECTLY CONDITIONED SPACE is an enclosed space that is provided with wood heating, is provided with mechanical heating that has a capacity exceeding 10 Btu/(hr.×ft.^{2}), or is provided with mechanical cooling that has a capacity exceeding 5 Btu/(hr.×ft.^{2}), unless the space-conditioning system is designed and thermostatically controlled to maintain a process environment temperature less than 55°F or to maintain a process environment temperature greater than 90°F for the whole space that the system serves, or unless the space-conditioning system is designed and controlled to be incapable of operating at temperatures above 55°F or incapable of operating at temperatures below 90°F at design conditions.

DISPLAY PERIMETER is the length of an exterior wall in a Group B; Group F, Division 1; or Group M Occupancy that immediately abuts a public sidewalk, measured at the sidewalk level for each story that abuts a public sidewalk.

DIVIDERS are wood, aluminum or vinyl glazing dividers including mullions, muntins, munnions and grilles. Dividers may truly divide lights, be between the panes, or be applied to the exterior or interior of the glazing.

DOCUMENTATION AUTHOR is a person who prepares a Title 24, Part 6 document that must subsequently be reviewed and signed by a responsible person in order to certify compliance with Part 6.

DOMINANT OCCUPANCY is the occupancy type in mixed occupancy buildings with the greatest percentage of total conditioned floor area.

DUCT LOSSES is heat transfer into or out of a space conditioning system duct through conduction or leakage.

DUCT SEALING is a procedure for installing a space conditioning distribution system that minimizes leakage of air from or to the distribution system. Minimum specifications for installation procedures, materials, diagnostic testing and field verification are contained in the Reference Residential Appendix RA3 and Reference Nonresidential Appendix NA2.

DUCT SYSTEM Includes all ducts, duct fittings, plenums and fans assembled to form a continuous passageway for the distribution of air.

> **ENTIRELY NEW OR REPLACEMENT DUCT SYSTEMS** installed as part of an alteration of a dwelling unit's space conditioning system(s) shall be constructed of at least 75% new duct material and may include reused parts from the dwelling unit's existing duct system (e.g. registers, boots, air handler, coil, plenums, duct material, etc.) but only if the reused parts are accessible and they can be sealed to prevent leakage.

DWELLING is a building that contains one or two dwelling units used, intended or designed to be used, rented, leased, let or hired out to be occupied for living purposes.

DWELLING UNIT is a single unit providing complete, independent living facilities for one or more persons including permanent provisions for living, sleeping, eating, cooking and sanitation.

EAST-FACING See Orientation.

ECONOMIZER, AIR is a ducting arrangement, including dampers, linkages, and an automatic control system, that allows a cooling supply fan system to supply outside air to reduce or eliminate the need for mechanical cooling.

ECONOMIZER, WATER is a system by which the supply air of a cooling system is cooled directly or indirectly by evaporation of water, or other appropriate fluid, in order to reduce or eliminate the need for mechanical cooling.

EDGE OF GLASS is the portion of fenestration glazing that is within two and one half inches of the spacer.

EER See Energy Efficiency Ratio.

ELECTRIC HEATING is an electrically powered heating source, such as electric resistance, heat pumps with no auxiliary heat or with electric auxiliary heat, solar with electric back-up, etc.

ELECTRIC RESISTANCE HEATING is a heating system that converts electric energy directly into heat energy by passing a current through an electric resistance. Electric resistance heat is inherently less efficient than gas as a heating energy source because it must account for losses associated with generation from depletable fossil fuels and transmission to the building site.

ELECTRONICALLY-COMMUTATED MOTOR is a brushless DC motor with a permanent magnet rotor that is surrounded by stationary motor windings, and an electronic controller that varies rotor speed and direction by sequentially supplying DC current to the windings.

EMITTANCE, THERMAL is the ratio of the radiant heat flux emitted by a sample to that emitted by a blackbody radiator at the same temperature.

ENCLOSED SPACE is space that is substantially surrounded by solid surfaces, including walls, ceilings or roofs, doors, fenestration areas, and floors or ground.

ENERGY BUDGET is the maximum amount of Time Dependent Valuation (TDV) energy that a proposed building, or portion of a building, can be designed to consume, calculated with the approved procedures specified in Part 6.

ENERGY COMMISSION See Commission.

ENERGY EFFICIENCY RATIO (EER) is the ratio of net cooling capacity (in Btu/hr.) to total rate of electrical energy input (in watts), of a cooling system under designated operating conditions, as determined using the applicable test method in the Appliance Efficiency Regulations or §110.2.

ENERGY EFFICIENCY STANDARDS See Building Energy Efficiency Standards.

ENERGY FACTOR (EF) of a water heater is a measure of overall water heater efficiency as determined using the applicable test method in the Appliance Efficiency Regulations.

ENERGY MANAGEMENT CONTROL SYSTEM (EMCS) is a computerized control system designed to regulate the energy consumption of a building by controlling the operation of energy consuming systems, such as the heating, ventilation and air conditioning (HVAC), lighting, and water heating systems, and is capable of monitoring environmental and system loads, and adjusting HVAC operations in order to optimize energy usage and respond to demand response signals.

ENERGY OBTAINED FROM DEPLETABLE SOURCES is electricity purchased from a public utility, or any energy obtained from coal, oil, natural gas, or liquefied petroleum gases.

ENERGY OBTAINED FROM NONDEPLETABLE SOURCES is energy that is not energy obtained from depletable sources.

ENFORCEMENT AGENCY is the city, county or state agency responsible for approving the plans, issuing a building permit and approving occupancy of the dwelling unit.

ENTIRE BUILDING is the ensemble of all enclosed space in a building, including the space for which a permit is sought, plus all existing conditioned and unconditioned space within the structure.

ENVELOPE See Building Envelope.

EVAPORATIVE COOLER provides cooling to a building by either direct contact with water (direct evaporative cooler), no direct contact with water (indirect evaporative cooler), or a combination of direct and indirect cooling (indirect/direct evaporative cooler). The credit offered for evaporative coolers depends on building type and climate.

EXCEPTIONAL METHOD is a method for estimating the energy performance of building features that cannot be adequately modeled using the public domain computer programs and that is approved by the Executive Director.

EXECUTIVE DIRECTOR is the Executive Director of the Commission.

EXFILTRATION is uncontrolled outward air leakage from inside a building, including leakage through cracks and interstices, around windows and doors, and through any other exterior partition or duct penetration.

EXPOSED THERMAL MASS is mass that is directly exposed (uncovered) to the conditioned space of the building. Concrete floors that are covered by carpet are not considered exposed thermal mass.

EXTERIOR FLOOR/SOFFIT is a horizontal exterior partition, or a horizontal demising partition, under conditioned space. For low-rise residential occupancies, exterior floors also include those on grade.

EXTERIOR PARTITION is an opaque, translucent, or transparent solid barrier that separates conditioned space from ambient air or space. For low-rise residential occupancies, exterior partitions also include barriers that separate conditioned space from unconditioned space, or the ground.

EXTERIOR ROOF/CEILING is an exterior partition, or a demising partition, that has a slope less than 60 degrees from horizontal, that has conditioned space below, and that is not an exterior door or skylight.

EXTERIOR ROOF/CEILING AREA is the area of the exterior surface of exterior roof/ceilings.

EXTERIOR WALL is any wall or element of a wall, or any member or group of members, which defines the exterior boundaries or courts of a building and which has a slope of 60 degrees or greater with the horizontal plane. An exterior wall or partition is not an exterior floor/soffit, exterior door, exterior roof/ceiling, window, skylight, or demising wall.

EXTERIOR WALL AREA is the area of the opaque exterior surface of exterior walls.

FACTORY ASSEMBLED COOLING TOWERS are cooling towers constructed from factory-assembled modules either shipped to the site in one piece or put together in the field.

FENESTRATION definitions include the following:

ACE is an NFRC-Approved Calculation Entity (ACE) that conducts calculations of fenestration product ratings for certification authorization using the NFRC Component Modeling approach and issues label certificates to Specifying Authorities for product certification authorization in accordance with NFRC requirements.

ALTERATION is any change to an existing building's exterior fenestration product that is not a repair (see Fenestration Repair) that:

(a) Replaces existing fenestration in an existing wall or roof with no net area added is considered an alteration and is subject to the Alteration Section in Part 6; or

(b) Replaces existing fenestration and adds new net area in the existing wall or roof; is subject to the Alteration Section in Part 6.

(c) Adds a new window that increases the net fenestration area to an existing wall or roof. New added window is not subject to the maximum window wall ration in Part 6.

ALTERED COMPONENT is a new fenestration component that has undergone an alteration other than a repair and is subject to all applicable Standards requirements.

BAY WINDOW is a combination assembly which is composed of three or more individual windows either joined side by side or installed within opaque assemblies and which projects away from the wall on which it is installed. Center windows, if used are parallel to the wall on which the bay is installed, the end panels or two side windows are angled with respect to the center window. Common angles are 30° and 45°, although other angles may be employed.

CMA (Component Modeling Approach) is a Fenestration Product Certification Program from the National Fenestration Rating Council (NFRC) which enables energy-related performance ratings for

nonresidential fenestration products, including the thermal performance U-factor, Solar Heat Gain Coefficient, and Visible Transmittance.

CENTER OF GLASS U-FACTOR is the U-factor for the glass portion only of vertical or horizontal fenestration and is measured at least two and one half inches from the frame. Center of glass U-factor does not consider the U-factor of the frame.

CMAST (Component Modeling Approach Software Tool) is an NFRC approved software that allows a user to create a fenestration product "virtually" and generate its energy-related performance ratings, including the thermal performance U-factor, Solar Heat Gain Coefficient, and Visible Transmittance.

CURTAIN WALL/STOREFRONT is an external nonbearing wall intended to separate the exterior non-conditioned and interior conditioned spaces. It also consists of any combination of framing materials, fixed glazing, opaque glazing, operable windows, or other in-fill materials.

GLAZED DOOR is an exterior door having a glazed area of 50 percent or greater of the area of the door.

DUAL-GLAZED GREENHOUSE WINDOWS is a double glass pane separated by an air or other gas space that adds conditioned volume but not conditioned floor area to a building.

DYNAMIC GLAZING SYSTEMS are glazing systems that have the ability to reversibly change their performance properties, including U-factor, Solar Heat Gain Coefficient (SHGC) and/or Visible Transmittance (VT) between well-defined end points. These may include, but are not limited to chromogenic glazing systems and integrated shading systems (Defined below). Dynamic Glazing systems do not include internally mounted or externally mounted shading devices that attach to the window framing/glazing that may or may not be removable.

(a) **CHROMOGENIC GLAZING** is a class of switchable glazing that includes active materials (e.g. electrochromic) and passive materials (e.g. photochromic and thermochromic) permanently integrated into the glazing assembly. Their primary function is to switch reversibly from a high transmission state to a low transmission state with associated changes in VT and SHGC.

(b) **INTEGRATED SHADING SYSTEM** is a class of fenestration products including an active layer: e.g. shades, louvers, blinds or other materials permanently integrated between two or more glazing layers. The U-factor and/or SHGC and VT of the insulating glass assembly can be altered by reversibly changing the enclosed active layer.

FAÇADE is the contiguous exterior of a building surface, but not limited to fenestration products.

FENESTRATION AREA for windows is the total window rough opening area which includes the fenestration, fenestration frame components in the exterior walls and roofs.

FENESTRATION PRODUCT is any transparent or translucent material plus any sash, frame, mullions and dividers, in the facade of a building, including, but not limited to, windows, sliding glass doors, French doors, skylights, curtain walls, dynamic glazing, garden windows and glass block.

FENESTRATION REPAIR shall not increase the preexisting energy consumption of the repaired component, system, or equipment. Replacement of any component, system, or equipment for which there are requirements in the Standards are considered an alteration (see Fenestration, Alterations) and not a repair and is subject to the requirements of Part 6 of the Standard.

FIELD-FABRICATED is a fenestration product whose frame is made at the construction site of standard dimensional lumber or other materials that were not previously cut, or otherwise formed with the specific intention of being used to fabricate a fenestration product. Field fabricated does not include site-built fenestration.

FIN is an opaque surface, oriented vertically and projecting outward horizontally from an exterior vertical surface.

(a) **FIN OFFSET** is the horizontal distance from the edge of exposed exterior glazing at the jamb of a window to the fin.

(b) **FIN PROJECTION** is the horizontal distance, measured outward horizontally, from the surface of exposed exterior glazing at the jamb of a window to the outward edge of a fin.

(c) **SIDE FINS** are vertical shading elements mounted on either side of a glazed opening that can protect the glazing from lateral low angle sun penetration.

FIXED is fenestration that is not designed to be opened or closed.

GREENHOUSE or GARDEN WINDOW is a window unit that consists of a three-dimensional, five-sided structure generally protruding from the wall in which it is installed. Operating sash may or may not be included.

LOW-E COATING is a low emissivity metallic coating applied to glazing in fenestration products. See Soft Coat and Hard Coat.

(a) **HARD COAT** is a low emissivity metallic coating applied to the glass, which will be installed in a fenestration product, through a pyrolytic process (at or near the melting point of the glass so that it bonds with the surface layer of glass). Hard coatings are less susceptible to oxidation and scratching as compared to soft coats. Hard coatings generally do not have as low emissivity as soft coats.

(b) **SOFT COAT** is a low emissivity metallic coating applied to glass, which will be installed in a fenestration product through a sputter process where molecules of metals such as stainless steel or titanium are sputtered onto the surface of glass. Soft coats generally have lower emissivity than hard coats.

MANUFACTURED or KNOCKED DOWN PRODUCT is a fenestration product constructed of materials which are factory cut or otherwise factory formed with the specific intention of being used to fabricate a fenestration product. However a “knocked-down or partially assembled product, sold as a fenestration product is also a manufactured fenestration product when provided with temporary and permanent labels as described in Section 10-111; otherwise it is a site-built fenestration product when not provided with temporary and permanent labels as described in Section 10-111.

NFRC 100 is the National Fenestration Rating Council document titled “NFRC 100: Procedure for Determining Fenestration Product U-factors.” (2011; NFRC 100 includes procedures for site fenestration formerly included in a separate document, NFRC 100-SB).

NFRC 200 is the National Fenestration Rating Council document titled “NFRC 200: Procedure for Determining Fenestration Product Solar Heat Gain Coefficients and Visible Transmittance at Normal Incidence.” (2011).

NFRC 202 is the National Fenestration Rating Council document entitled “NFRC 202: Procedures for Determining Translucent Fenestration Product Visible Transmittance at Normal Incidence.” (2011).

NFRC 203 is the National Fenestration Rating Council document entitled “NFRC 203: Procedure for Determining Visible Transmittance of Tubular Daylighting Devices.” (2012).

NFRC 400 is the National Fenestration Rating Council document titled “NFRC 400: Procedure for Determining Fenestration Product Air Leakage.” (2010).

OPERABLE is fenestration that is designed to be opened or closed.

OPERABLE SHADING DEVICE is a device at the interior or exterior of a building or integral with a fenestration product, which is capable of being operated, either manually or automatically, to adjust the amount of solar radiation admitted to the interior of the building.

OVERHANG is a contiguous opaque surface, oriented horizontally and projecting outward horizontally from an exterior vertical surface.

OVERHANG OFFSET is the vertical distance from the edge of exposed exterior glazing at the head of a window to the overhang.

OVERHANG PROJECTION is the horizontal distance, measured outward horizontally from the surface of exposed exterior glazing at the head of a window to the outward edge of an overhang.

RELATIVE SOLAR HEAT GAIN is the ratio of solar heat gain through a fenestration product (corrected for external shading) to the incident solar radiation. Solar heat gain includes directly transmitted solar heat and absorbed solar radiation, which is then reradiated, conducted, or convected into the space.

SITE-BUILT is fenestration designed to be field-glazed or field assembled units using specific factory cut or otherwise factory formed framing and glazing units, that are manufactured with the intention of being assembled at the construction site. These include storefront systems, curtain walls, and atrium roof systems.

SKYLIGHT is fenestration installed on a roof less than 60 degrees from the horizontal.

SKYLIGHT AREA is the area of the rough opening for the skylight.

SKYLIGHT TYPE Is one of the following three types of skylights: glass mounted on a curb, glass not mounted on a curb or plastic (assumed to be mounted on a curb).

SOLAR HEAT GAIN COEFFICIENT (SHGC) is the ratio of the solar heat gain entering the space through the fenestration area to the incident solar radiation. Solar heat gain includes directly transmitted solar heat and absorbed solar radiation, which is then reradiated, conducted, or convected into the space.

SOLAR HEAT GAIN COEFFICIENT, CENTER OF GLAZING (SHGCc) is the SHGC for the center of glazing area.

SOLAR HEAT GAIN COEFFICIENT, TOTAL FENESTRATION PRODUCT (SHGC or SHGCT) is the SHGC for the total fenestration product.
SPANDREL PANEL is opaque glazing material most often used to conceal building elements between floors of a building so they cannot be seen from the exterior, also known as “opaque in-fill systems.”

TINTED GLASS is colored glass by incorporation of a mineral admixture resulting in a degree of tinting. Any tinting reduces both visible and radiant transmittance.

U-FACTOR, CENTER OF GLAZING (Uc) is the U-Factor for the center of glazing area.

U-FACTOR, TOTAL FENESTRATION PRODUCT (U_t) is the U-Factor for the total fenestration product.

VISIBLE TRANSMITTANCE (VT) is the ratio (expressed as a decimal) of visible light that is transmitted through a glazing fenestration.The higher the VT rating, the more light is allowed through a window.

VISIBLE TRANSMITTANCE, CENTER OF GLAZING (VTC) the VT for the center of glazing area.

VISIBLE TRANSMITTANCE, TOTAL FENESTRATION PRODUCT (VT or VTt) is the VT for the total fenestration product.

VISIBLE TRANSMITTANCE (VT) is the ratio (expressed as a decimal) of visible light that is transmitted through a glazing fenestration. The higher the VT rating, the more light is allowed through a window.

WINDOW is fenestration that is not a skylight and that is an assembled unit consisting of a frame and sash component holding one or more pieces of glazing.

WINDOW AREA is the area of the surface of a window, plus the area of the frame, sash, and mullions.

WINDOW FILM is fenestration attachment products which consist of a flexible adhesive-backed polymer film which may be applied to the interior or exterior surface of an existing glazing system.

WINDOW WALL RATIO Is the ratio of the window area to the gross exterior wall area.

FIELD ERECTED COOLING TOWERS are cooling towers which are custom designed for a specific application and which cannot be delivered to a project site in the form of factory assembled modules due to their size, configuration, or materials of construction.

FIELD TECHNICIAN is a person who performs acceptance tests in accordance with the specifications in Reference Nonresidential Appendix NA-7 and reports the results of the acceptance tests on the Certificate of Acceptance document, in accordance with the requirements of §10-103(a)4.

FIREPLACE is a hearth and fire chamber or similar prepared place in which a fire may be made and which is built in conjunction with a flue or chimney, including but not limited to factory-built fireplaces, masonry fireplaces, and masonry heaters as further clarified in the CBC.

FLOOR AREA is the floor area (in square feet) of enclosed conditioned or unconditioned space on all floors of a building, as measured at the floor level of the exterior surfaces of exterior walls enclosing the conditioned or unconditioned space.

FLOOR/SOFFIT TYPE is a floor/soffit assembly having a specific heat capacity, framing type, and U-factor.

FLUID COOLER is a fan-powered heat rejection device that includes a water or glycol circuit connected by a closed circulation loop to a liquid-cooled refrigerant condenser, and may be either evaporative-cooled, air-cooled or a combination of the two.

FOOD PREPARATION EQUIPMENT is cooking equipment intended for commercial use, including coffee machines, espresso coffee makers, conductive cookers, food warmers including heated food servers, fryers, griddles, nut warmers, ovens, popcorn makers, steam kettles, ranges, and cooking appliances for use in commercial kitchens, restaurants, or other business establishments where food is dispensed.

FOSSIL FUELS are fuels which are derived from natural gas, coal, oil and liquefied petroleum products. These are generally nonrenewable resources, although natural gas may also be produced by other means, such as biomass conversion.

FRAMED PARTITION OR ASSEMBLY is a partition or assembly constructed using separate structural members spaced not more than 32 inches on center.

FRAMING EFFECTS is the effect on the overall U-factor due to the type and amount of framing in walls, roofs/ceilings and floors. For compliance, fixed values for wood framing percentages are assumed when calculating U-factors.

FRAMING PERCENTAGE is the fraction of the surface of a partition that is framing as compared to that portion which is cavity.

FREEZER is a space designed to maintain less than 28°F.

FRONT is the primary entry side of the building (front facade) used as a reference in defining the orientation of the building or unit plan. The orientation of the front facade may not always be the same as that for the front door itself.

GAP WIDTH is the distance between lites in multi-glazed systems. This is typically measured from inside surface to inside surface, though some manufacturers may report “overall” insulated glass (IG) width, which is measured from outside surface to outside surface.

GAS COOLING EQUIPMENT is cooling equipment that produces chilled water or cold air using natural gas or liquefied petroleum gas as the primary energy source.

GAS HEATING SYSTEM is a system that uses natural gas or liquefied petroleum gas as fuel to heat a conditioned space.

GAS INFILLS are air, argon, krypton, CO_2, SF6, or a mixture of these gasses between the panes of glass in insulated glass units.

GAS LOG is a self-contained, free-standing, open-flame, gas-burning appliance consisting of a metal frame or base supporting simulated logs, and designed for installation only in a vented fireplace.

GEOTHERMAL HEAT PUMP See Ground Source Heat Pump.

GLAZING See Fenestration Product.

GLAZING AREA See Fenestration Area.

GLOBAL WARMING POTENTIAL (GWP) is the radiative forcing impact of one mass-based unit of a given greenhouse gas relative to an equivalent unit of carbon dioxide over a given period of time.

GLOBAL WARMING POTENTIAL VALUE (GWP VALUE) is the 100-yr GWP value first published by the Intergovernmental Panel on Climate Change (IPCC) in its Second Assessment Report (SAR) (IPCC, 1995; or if a 100-yr GWP value was not specified in the IPCC SAR, it means the GWP value published by the IPCC in its Fourth Assessment A-3 Report (AR4) (IPCC, 2007); or if a 100-yr GWP value was not specified in the IPCC AR4, then the GWP value will be determined by the Commission based on data, studies and/or good engineering or scientific judgment. Both the 1995 IPCC SAR values and the 2007 IPCC AR4 values are published in table 2.14 of the 2007 IPCC AR4. The SAR GWP values are found in column "SAR (100-yr)" of Table 2.14.; the AR4 GWP values are found in column "100 yr" of Table 2.14."

GOVERNMENTAL AGENCY is any public agency or subdivision thereof, including, but not limited to, any agency of the state, a county, a city, a district, an association of governments, or a joint power agency.

GRILLES See Dividers.

GROSS EXTERIOR ROOF AREA is the sum of the skylight area and the exterior roof/ceiling area.

GROSS EXTERIOR WALL AREA is the sum of the window area, door area, and exterior wall area.

GROUND FLOOR AREA is the slab-on-grade area of a slab-on-grade building and the conditioned footprint area of a raised floor building (for compliance with the low-rise residential standards).

GROUND SOURCE HEAT PUMP is a heat pump that uses the earth as a source of energy for heating and a sink for energy when cooling. Some systems pump water from an aquifer in the ground and return the water to the ground after transferring heat from or to the water. A few systems use refrigerant directly in a loop of piping buried in the ground. Those heat pumps that use either a water loop or pump water from an aquifer have efficiency test methods that are accepted by the Energy Commission. These efficiency values are certified to the Energy Commission by the manufacturer and are expressed in terms of heating Coefficient of Performance (COP) and cooling Energy Efficiency Ratio (EER).

HABITABLE SPACE is building space intended for continual human occupancy; such space generally includes areas used for living, sleeping, dining, and cooking but does not generally include bathrooms, toilets, hallways, storage areas, closets or utility rooms.

HABITABLE STORY is a story that contains space in which humans may work or live in reasonable comfort, and that has at least 50 percent of its volume above grade.

HEAT CAPACITY (HC) or thermal capacity is the measurable physical quantity that characterizes the amount of heat required to change a substance's temperature by a given amount.

HEAT PUMP is an appliance, that consists of one or more assemblies; that uses an indoor conditioning coil, a compressor, and a refrigerant-to-outdoor air heat exchanger to provide air heating; and that may also provide air cooling, dehumidifying, humidifying, circulating, or air cleaning.

HEATED SLAB FLOOR is a concrete floor, either on-grade, raised, or a lightweight concrete slab topping. Heating is provided by a system placed within or under the slab, and is sometimes referred to as a radiant slab floor.

HEATING EQUIPMENT is equipment used to provide mechanical heating for a room or rooms in a building.

HEATING SEASONAL PERFORMANCE FACTOR (HSPF) is the total heating output of a central air-conditioning heat pump (in Btu) during its normal use period for heating divided by the total electrical energy input (in watt-hours) during the same period, as determined using the applicable test method in the Appliance Efficiency Regulations.

HERS Is the California Home Rating System as described in Title 20, Chapter 4, Article 8, Section 1670.

HERS PROVIDER is an organization that administers a home energy rating system as described in Title 20, Chapter 4, Article 8, Section 1670.

HERS PROVIDER DATA REGISTRY is a residential data registry maintained by an approved HERS provider.

HERS RATER is a person who has been trained, tested, and certified by a HERS Provider to perform the field verification and diagnostic testing required for demonstrating compliance with the Part 6, as described in Title 20, Chapter 4, Article 8, Section 1670.

HI is the Hydronics Institute of the Gas Appliance Manufacturers Association (GAMA).

HI HTG BOILER STANDARD is the Hydronics Institute document titled "Testing and Rating Standard for Rating Boilers," 1989.

HIGH-RISE RESIDENTIAL BUILDING is a building, other than a hotel/motel, of Occupancy Group R, Group R-2 or R-4 with four or more stories.

HOME ENERGY RATING SYSTEM (HERS) PROVIDER See HERS Rater.

HOOD is a device designed to capture and contain cooking effluent including, grease, smoke, steam, heat, and vapor until it is exhausted through a duct or recirculating system. Hoods are categorized as Type 1 or Type 2:

TYPE I HOOD is a hood used for collecting and removing convective heat, grease particulate, condensable vapor, and smoke. It includes listed grease filters, baffles, or extractors for removing the grease and a fire-suppression system. Type I hoods are installed over cooking appliances, such as ranges, fryers, griddles, broilers, and ovens, that produce smoke or grease-laden vapors. For Type I hoods, the following types of hoods are commonly available:

WALL-MOUNTED CANOPY HOOD is mounted against a wall above a single appliance or a line of appliances, or it may be free-standing with a vertical back panel extending from the rear of the appliance(s) to the hood. It typically extends beyond the front and sides of the appliance(s) on all open sides. The wall acts as a back panel, forcing replacement air to be drawn across the front and/or side(s) of the cooking appliance, thus increasing the effectiveness of the hood to capture and contain effluent generated by the cooking operations.

SINGLE ISLAND CANOPY HOOD is placed over a single appliance or line of appliances. It is open on all sides and overhangs the front, rear, and sides of the appliance(s). A single island canopy is more susceptible to cross-drafts and requires a greater exhaust airflow than an equivalent sized wall-mounted canopy to capture and contain effluent generated by the cooking operations.

DOUBLE ISLAND CANOPY HOOD is placed over back-to-back appliances or lines of appliances. It is open on all sides and overhangs the front and the sides of the appliance(s). It may have a wall panel between the backs of the appliances.

BACKSHELF or PROXIMITY HOOD is a low-proximity hood, or a wall-mounted sidewall hood that:

(a) is positioned lower in height and depth than a canopy hood;

(b) is set back from the front of the appliance;

(c) is closed to the rear of the appliances by (a) a panel when the appliance is freestanding, or (b) a panel or wall when the appliance is wall mounted, and;

(d) is located above the cooking surface.

This style of hood can be constructed with partial end panels to increase its effectiveness in capturing the effluent generated by the cooking operations.

EYEBROW HOOD is mounted directly to the face or top of an appliance above the opening(s) or door(s) from which effluent is emitted, overhanging the front of the opening(s) to capture the effluent.

PASS-OVER HOOD is a back shelf hood constructed and installed low enough to allow food to be passed over the top.

TYPE II HOOD is a type of hood that collects and removes steam, heat, and products of combustion where grease or smoke is not present. It may or may not have grease filters or baffles and is not required to have a fire-suppression system.

HORIZONTAL GLAZING See Skylight.

HOTEL/MOTEL is a building or buildings that has six or more guest rooms or a lobby serving six or more guest rooms, where the guest rooms are intended or designed to be used, or which are used, rented, or hired out to be occupied, or which are occupied for sleeping purposes by guests, and all conditioned spaces within the same building envelope. Hotel/motel also includes all conditioned spaces which are (1) on the same property as the hotel/motel, (2) served by the same central heating, ventilation, and air-conditioning system as the hotel/motel, and (3) integrally related to the functioning of the hotel/motel as such, including, but not limited to, exhibition facilities, meeting and conference facilities, food service facilities, lobbies, and laundries.

HSPF See Heating Seasonal Performance Factor.

HVAC SYSTEM is a space conditioning system or ventilation system.

HYDRONIC COOLING SYSTEM is any cooling system which uses water or a water solution as a source of cooling or heat rejection, including chilled water systems (both air and water-cooled) as well as water-cooled or evaporatively cooled direct expansion systems, such as water source (water-to-air) heat pumps.

HYDRONIC SPACE HEATING SYSTEM is a system that uses water-heating equipment, such as a storage tank water heater or a boiler, to provide space heating. Hydronic space heating systems include both radiant floor systems and convective or fan coil systems. See Combined Hydronic Space/Water Heating System.

IES HB See IES Lighting Handbook.

IES LIGHTING HANDBOOK is the Illuminating Engineering Society National Association document titled “The IES Lighting Handbook: Reference and Applications, Tenth Edition” (2011).

IES LM-79-08 is the Illuminating Engineering Society document titled, “IES Approved Method for the Electrical and Photometric Measurements of Solid-State Lighting Products.”

IES TM-15-11 is the Illuminating Engineering Society document titled, “Luminaire Classification Systems for Outdoor Luminaires.”

IG UNIT See Insulating Glass Unit.

INDEPENDENT IDENTITY is having no financial interest in, and not advocating or recommending the use of any product or service as a means of gaining increased business with firms or persons specified in Section 1673(i) of the California Home Energy Rating System Program regulations (California Code of Regulations, Title 20, Division 2, Chapter 4, Article 8). (Financial Interest is an ownership interest, debt agreement, or employer/employee relationship. Financial interest does not include ownership of less than 5 percent of the outstanding equity securities of a publicly traded corporation).

> ***NOTE****:* The definitions of "independent entity" and "financial interest," together with Title 20, Section 1673(i), prohibit conflicts of interest between HERS Providers and HERS Raters, or between Providers/Raters and builders/subcontractors.

INDIRECTLY CONDITIONED SPACE is enclosed space, including, but not limited to, unconditioned volume in atria, that (1) is not directly conditioned space; and (2) either (a) has a thermal transmittance area product (UA) to directly conditioned space exceeding that to the outdoors or to unconditioned space and does not have fixed vents or openings to the outdoors or to unconditioned space, or (b) is a space through which air from directly conditioned spaces is transferred at a rate exceeding three air changes per hour.

INDUSTRIAL EQUIPMENT is manufactured equipment used in industrial processes.

INFILTRATION is uncontrolled inward air leakage from outside a building or unconditioned space, including leakage through cracks and interstices, around windows and doors, and through any other exterior or demising partition or pipe or duct penetration.

INFILTRATION CONTROLS are measures taken to control the infiltration of air. (Mandatory Infiltration control measures include weather-stripping, caulking, and sealing in and around all exterior joints and openings).

INSTALLER means the builder's subcontractor or the person installing the equipment.

INSULATING GLASS UNIT is a self-contained unit, including the glazings (lites or panes of glass), spacer(s), films (if any), gas infills, and edge caulking, installed in fenestration products. It does not include the frame.

INSULATION is a material that limits heat transfer. Insulating material of the types and forms listed in Section 110.8(a) may be installed only if the manufacturer has certified that the insulation complies with the Standards for Insulating Material, Title 24, Part 12, Chapter 12-13 of the California Code of Regulations. (Movable insulation is designed to cover windows and other glazed openings part of the time to reduce heat loss and heat gain.)

INTEGRATED ENERGY EFFICIENCY RATIO (IEER) is a single-number cooling part load efficiency figure of merit calculated per the method described in AHRI Standard 340/360. This metric replaces the IPLV for ducted and non-ducted units.

INTEGRATED PART LOAD VALUE (IPLV) is a single-number figure of merit calculated per the method described in AHRI Standard 550/590 for use with chillers.

INTERIOR PARTITION is an interior wall or floor/ceiling that separates one area of conditioned space from another within the building envelope.

IPLV See Integrated Part Load Value.

ISO 13256-1 is the International Organization for Standardization document titled "Water-source heat pumps -- Testing and rating for performance -- Part 1: Water-to-air and brine-to-air heat pumps," 1998.

ISO 13256-2 is the International Organization for Standardization document titled "Water-source heat pumps Testing and rating for performance -- Part 1: Water-to-water and brine-to-water heat pumps," 1998.

ISO/IEC 17011 is the International Organization for Standardization and the International Electrotechnical Commission document titled "Conformity assessment – General requirements for accreditation bodies accrediting conformity assessment bodies." (EN ISO/IEC 17011:2004)

ISO/IEC 17020 is the International Organization for Standardization and the International Electrotechnical Commission document titled "General criteria for the operation of various types of bodies performing inspection." (EN ISO/IEC 17020:2004)

ISO/IEC 17025 is the International Organization for Standardization and the International Electrotechnical Commission document titled "General requirements for the competence of testing and calibration laboratories." 2005 (ANS/ISO/IEC Standard 17025:2005).

ISOLATION DEVICE is a device that prevents the conditioning of a zone or group of zones in a building while other zones of the building are being conditioned.

KNEE WALL is a sidewall separating conditioned space from attic space under a pitched roof. Knee walls should be insulated as an exterior wall as specified by the chosen method of compliance.

LANGELIER SATURATION INDEX (LSI) is expressed as the difference between the actual system pH and the saturation pH. LSI indicates whether water will precipitate, dissolve, or be in equilibrium with calcium carbonate, and is a function of hardness, alkalinity, conductivity, pH and temperature.

LARGEST NET CAPACITY INCREMENT is the largest increase in capacity when switching between combinations of base compressors that is expected to occur under the compressed air system control scheme.

LEFT SIDE is the left side of the building as one faces the front facade from the outside. This designation is used on the Certificate of Compliance and other compliance documentation.

LIGHTING definitions:

> **Accent Lighting** is directional lighting designed to highlight or spotlight objects. It can be recessed, surface mounted or mounted to a pendant, stem or track.
>
> **Chandelier** is a ceiling-mounted, close-to-ceiling or suspended decorative luminaire that uses glass, crystal, ornamental metals or other decorative material.

Compact Fluorescent Lamp is a fluorescent lamp less than 9 inches maximum overall length (M.O.L.) with a T5 or smaller diameter glass tube that is folded, bent or bridged.

Decorative (Lighting/Luminaire) is lighting or luminaires installed only for aesthetic purposes and that does not serve as display lighting or general lighting.

Display Lighting is lighting that provides a higher level of illuminance to a specific area than the level of surrounding ambient illuminance. Types of display lighting include:

Floor: supplementary lighting required to highlight features, such as merchandise on a clothing rack, which is not displayed against a wall.

Wall: supplementary lighting required to highlight features, such as merchandise on a shelf, which is displayed on perimeter walls.

Window: lighting of objects such as merchandise, goods, and artifacts, in a show window, to be viewed from the outside of a space through a window.

Case: lighting of small art objects, artifacts or valuable collections which involves customer inspection of very fine detail from outside of a glass enclosed display case.

General Lighting is installed electric lighting that provides a uniform level of illumination throughout an area, exclusive of any provision for special visual tasks or decorative effect, exclusive of daylighting, and also known as ambient lighting.

GU-24 is the designation of a lamp holder and socket configuration, based on a coding system by the International Energy Consortium, where “G” indicates the broad type of two or more projecting contacts, such as pins or posts, “U” distinguishes between lamp and holder designs of similar type but that are not interchangeable due to electrical or mechanical requirements, and “24” indicates 24 millimeters center to center spacing of the electrical contact posts.

Illuminance is the incident luminous flux density on a differential element of surface located at a point and oriented in a particular direction, expressed in lumens per unit area.

Illumination is light incident on a surface of body, or the general condition of being illuminated.

Lamp is an electrical appliance that produces optical radiation for the purpose of visual illumination, designed with a base to provide an electrical connection between the lamp and a luminaire, and designed to be installed into a luminaire by means of a lamp-holder integral to the luminaire.

Landscape Lighting is a type of outdoor lighting that is recessed into or mounted on the ground, paving or raised deck, which is mounted less than 42” above grade or mounted onto trees or trellises, and that is intended to be aimed only at landscape features.

Lantern is an outdoor luminaire that uses an electric lamp to replicate the appearance of a pre-electric lantern, which used a flame to generate light.

Light is the luminous equivalent of power and is properly called luminous flux.

Lighting, or illumination, is the application of light to achieve some practical or aesthetic effect.

Light Emitting Diode (LED) definitions used in Part 6 are in section 6.8 of ANSI/IES RP-16-10.

Low Voltage is less than 90 volts.

Lumen Maintenance is a strategy used to provide a precise, constant level of lighting from a lighting system regardless of the age of the lamps or the maintenance of the luminaires.

Luminaire is a complete lighting unit consisting of lamp(s) and the parts that distribute the light, position and protect the lamp(s), and connect the lamp(s) to the power supply.

Luminance is a measure of the light emitting power of a surface, in a particular direction, per unit apparent area.

Luminous flux is visually evaluated radiant flux and defines “light” for purposes of lighting design and illuminating engineering.

Marquee lighting is a permanent lighting system consisting of one or more rows of many small lamps, including light emitting diodes (LEDs), or fiber optic lighting, attached to a canopy.

Ornamental lighting for compliance with Part 6 is the following:

Luminaires installed outdoor which are rated for 100 watts or less that are post-top luminaires, lanterns, pendant luminaires, chandeliers and marquee lighting.

Decorative Luminaires installed indoor that are chandeliers, sconces, lanterns, neon and cold cathode, light emitting diodes, theatrical projectors, moving lights and light color panels.

Pendant is a mounting method in which the luminaire is suspended from above.

Permanently Installed lighting consists of luminaires that are affixed to land, within the meaning of Civil Code Sections 658 and 660, except as provided below. Permanently installed luminaires may be mounted inside or outside of a building or site. Permanently installed luminaires may have either plug-in or hardwired connections for electric power. Examples include track and flexible lighting systems; lighting attached to walls, ceilings, columns, inside or outside of permanently installed cabinets, internally illuminated cabinets, mounted on poles, in trees, or in the ground; attached to ceiling fans and integral to exhaust fans. Permanently installed lighting does not include portable lighting or lighting that is installed by the manufacturer in exhaust hoods for cooking equipment, refrigerated cases, food preparation equipment, and scientific and industrial equipment.

Portable Lighting is lighting, with plug-in connections for electric power, that is: table and freestanding floor lamps; attached to modular furniture; workstation task luminaires; luminaires attached to workstation panels; attached to movable displays; or attached to other personal property.

Post top luminaire is an outdoor luminaire that is mounted directly on top of a lamp-post.

Precision Lighting is task lighting for commercial or industrial work that illuminates low contrast, finely detailed, or fast moving objects.

Radiant power is the time-rate-flow of radiant energy.

Radiant Energy is the electromagnetic or photonic radiant energy from a source.

Sconce is a wall mounted decorative accent luminaire.

Source (light) is the general term used to reference a source of light. It can refer variously to an electric lamp, a light emitting diode (LED), an entire luminaire with lamp and optical control, or fenestration for daylighting.

Special Effects Lighting is lighting installed to give off luminance instead of providing illuminance, which does not serve as general, task, or display lighting.

Task Lighting is lighting that is not general lighting and that specifically illuminates a location where a task is performed.

Temporary Lighting is a lighting installation, with plug-in connections, that does not persist beyond 60 consecutive days or more than 120 days per year.

Track Lighting is a system that includes luminaires and a track, rails, or cables that both mount the system, and deliver electric power. Track lighting includes the following types:

Line-Voltage Track Lighting is equipped with luminaires that use line-voltage lamps or that are equipped with integral transformers at each luminaire.

Low-Voltage Track Lighting is equipped with remote transformers for use with low-voltage equipment along the entire length of track.

Track-Mounted Luminaires are luminaires designed to be attached at any point along a track lighting system. Track mounted luminaires may be line-voltage or low-voltage.

Tuning is the ability to set maximum light levels at a lower level than full lighting power.

LIQUID LINE is the refrigerant line that leads from the condenser to the evaporator in a split system air conditioner or heat pump. The refrigerant in this line is in a liquid state and is at an elevated temperature. This line should not be insulated.

LISTED is in accordance with Article 100 of the California Electrical Code.

LOW-GWP REFRIGERANT is a compound used as a heat transfer fluid or gas that is: (A) any compound or blend of compounds, with a GWP Value less than 150; and (B) U.S. EPA Significant New Alternatives Policy (SNAP)-approved; and (C) not an ozone depleting substance as defined in Title 40 of the Code of Federal Regulations, Part 82, §82.3 (as amended March 10, 2009).

LOW-RISE ENCLOSED SPACE is an enclosed space located in a building with 3 or fewer stories.

LOW-RISE RESIDENTIAL BUILDING is a building, other than a hotel/motel that is Occupancy Group:

R-2, multi-family, with three stories or less; or

R-3, single family; or

U-building, located on a residential site.

LOW-SLOPED ROOF is a roof that has a ratio of rise to run of 2:12 or less.

LPG is liquefied petroleum gas. Propane is one type of LPG.

MAKEUP AIR is outdoor air deliberately brought into the building from the outside and supplied to the vicinity of an exhaust hood to replace air, vapor, and contaminants being exhausted. Makeup air is generally filtered and fan-forced, and it may be heated or cooled depending on the requirements of the application. Makeup air may be delivered through outlets integral to the exhaust hood or through outlets in the same room. (see Stds.)

MANDATORY MEASURES CHECKLIST is a form used by the building plan checker and field inspector to verify compliance of the building with the prescribed list of mandatory features, equipment efficiencies and product certification requirements. The documentation author indicates compliance by initialing, checking, or marking N/A (for features not applicable) in the boxes or spaces provided for the designer.

MANUAL is capable of being operated by personal intervention.

MANUFACTURED DEVICE is any heating, cooling, ventilation, lighting, water heating, refrigeration, cooking, plumbing fitting, insulation, door, fenestration product, or any other appliance, device, equipment, or system subject to §110.0 through §110.9 of Part 6.

LIGHTING CONTROLS consist of the following:

Astronomical Time-Switch Control is an Automatic Time-Switch Control that controls lighting based on the time of day and astronomical events such as sunset and sunrise, accounting for geographic location and calendar date.

Automatic Daylight Control uses one or more photosensors to detect changes in daylight illumination and then automatically adjusts the luminous flux of the electric lighting system in response.

Automatic Multi-Level Daylight Control adjusts the luminous flux of the electric lighting system in either a series of steps or by continuous dimming in response to available daylight. This kind of control uses one or more photosensors to detect changes in daylight illumination and then automatically adjusts the electric lighting levels in response.

Automatic Time Switch Control controls lighting based on the time of day.

Captive-Key Override is a type of lighting control in which the key that activates the override cannot be released when the lights are in the on position.

Countdown Timer Switch turns lighting or other loads ON when activated using one or more selectable count-down time periods and then automatically turns lighting or other loads OFF when the selected time period had elapsed.

Dimmer varies the luminous flux of the electric lighting system by changing the power delivered to that lighting system.

Dimmer, Full-Range (Also known as a Continuous Dimmer) varies the luminous flux of the electric lighting system over a continuous range from the device's maximum light output to the device's minimum light output without visually apparent abrupt changes in light level between the various steps.

Dimmer, Stepped varies the luminous flux of the electric lighting system in one or more predetermined discrete steps between maximum light output and OFF with changes in light level between adjacent steps being visually apparent.

Lighting Control, Self Contained is a unitary lighting control module that requires no additional components to be a fully functional lighting control.

Lighting Control System requires two or more components to be installed in the building to provide all of the functionality required to make up a fully functional and compliant lighting control.

Multi-Level Astronomical Time Switch is an Astronomical Time Switch Control that reduces lighting power in multiple steps.

Multi-Level Lighting Control reduces power going to a lighting system in multiple steps.

Multiscene Programmable Control allows for two or more pre-defined lighting settings, in addition to all-OFF, for two or more groups of luminaires to suit multiple activities in the space.

Occupant Sensing Controls automatically control levels of illumination, allow for manual operation, and consist of the following types:

Motion Sensor is used outdoors, automatically turns lights OFF after an area is vacated of occupants, and automatically turns the lightsON when the area is occupied.

Occupant Sensor is used indoors and automatically turns lights OFF after an area is vacated of occupants and is capable of automatically turning the lights ON when an area is occupied.

Partial-ON Occupant/Motion Sensor automatically turns lights OFF after an area is vacated of occupants and is capable of automatically or manually turning ON part of the lightswhen an area is occupied.

Partial-OFF Occupant/Motion Sensor automatically turns OFF part of the lights after an area is vacated of occupants and is capable of automatically turning ON the lightswhen an area is occupied.

Vacancy Sensor automatically turns lights OFF after an area is vacated of occupants but requires lights to be turned ON manually.

Part-Night Outdoor Lighting Control is a time or occupancy-based lighting control device or system that is programmed to reduce or turn off the lighting power to an outdoor luminaire for a portion of the night.

Photo Control automatically turns lights ON and OFF, or automatically adjusts lighting levels, in response to the amount of daylight that is available. A Photo Control may also be one component of a field assembled lighting system, the component having the capability to provide a signal proportional to the amount of daylight to a Lighting Control System to continuously dim or brighten the electric lights in response.

Track Lighting Integral Current Limiter consists of a current limiter integral to the end-feed housing of a manufactured line-voltage track lighting system.

Track Lighting Supplementary Overcurrent Protection Panel is a Panelboard containing Supplementary Overcurrent Protection Devices as defined in Article 100 of the California Electrical Code, and used only with line voltage track lighting.

MECHANICAL COOLING is lowering the temperature within a space using refrigerant compressors or absorbers, desiccant dehumidifiers, or other systems that require energy from depletable sources to directly condition the space. In nonresidential, high-rise residential, and hotel/motel buildings, cooling of a space by direct or indirect evaporation of water alone is not considered mechanical cooling.

MECHANICAL HEATING is raising the temperature within a space using electric resistance heaters, fossil fuel burners, heat pumps, or other systems that require energy from depletable sources to directly condition the space.

MEDICAL AND CLINICAL CARE See Nonresidential Functional Area or Type of Use.

MERV is the Minimum Efficiency Reporting Value as determined by ASHRAE Standard 52.2 Method of Testing General Ventilation Air-Cleaning Devices for Removal Efficiency by Particle Size.

METAL BUILDING is a complete integrated set of mutually dependent components and assemblies that form a building, which consists of a steel-framed superstructure and metal skin. This does not include structural glass or metal panels such as in a curtain wall system.

MICROCHANNEL CONDENSER is an air-cooled condenser for refrigeration systems which utilizes multiple small parallel gas flow passages in a flat configuration with fin surfaces bonded between the parallel gas passages.

MINISPLIT AIR CONDITIONERS AND HEAT PUMPS are systems that have a single outdoor section and one or more indoor sections. The indoor sections cycle on and off in unison in response to a single indoor thermostat.

MIXED OCCUPANCY BUILDING is a building designed and constructed for more than one type of occupancy, such as a three story building with ground floor retail and second and third floor residential apartments.

MODEL is a single floor plan of a dwelling unit design. To be considered the same model; dwelling units shall be in the same subdivision or multi-family housing development and have the same energy designs and features, including the same floor area and volume. For multi-family buildings, variations in the exterior surface areas caused by the location of dwelling units within the building do not cause dwelling units to be considered different models.

> ***NOTE:*** For purposes of establishing HERS sampling groups, variations in the basic floor plan layout, energy design, compliance features, zone floor area, or zone volume, that do not change the HERS features to be tested, the heating or cooling capacity of the HVAC unit(s), or the number of HVAC units specified for each dwelling unit, shall not cause dwelling units to be considered different models.

MODELING ASSUMPTIONS are the conditions (such as weather conditions, thermostat settings and schedules, internal gain schedules, etc.) that are used for calculating a building's annual energy consumption as specified in the Alternative Calculation Methods (ACM) Approval Manuals.

MOVABLE SHADING DEVICE See Operable Shading Device.

MULLION is a vertical framing member separating adjoining window or door sections. See Dividers.

MULTI-FAMILY DWELLING UNIT is a dwelling unit of occupancy type R, as defined by the CBC, sharing a common wall and/or ceiling/floor with at least one other dwelling unit.

MULTIPLE-SPLIT AIR CONDITIONERS AND HEAT PUMPS are systems that have two or more indoor sections. The indoor sections operate independently and can be used to condition multiple zones in response to multiple indoor thermostats.

MULTIPLE ZONE is a supply fan (and optionally a return fan) with heating and/or cooling heat exchangers (e.g. DX coil, chilled water coil, hot water coil, furnace, electric heater) that serves more than one thermostatic zone. Zones are thermostatically controlled by features including but not limited to variable volume, reheat, recool and concurrent operation of another system.

MULTIPLE ZONE SYSTEM is an air distribution system that supplies air to more than one Space Conditioning Zone, each of which has one or more devices (such as dampers, cooling coils, and heating coils) that regulate airflow, cooling, or heating capacity to the zone.

MUNTINS See Dividers.

NET EXHAUST FLOW RATE is the exhaust flow rate for a hood, minus any internal discharge makeup air flow rate.

NEWLY CONDITIONED SPACE is any space being converted from unconditioned to directly conditioned or indirectly conditioned space. Newly conditioned space must comply with the requirements for an addition. See §1410.0 for nonresidential occupancies and §150.2 for residential occupancies.

NEWLY CONSTRUCTED BUILDING is a building that has never been used or occupied for any purpose.

NFRC is the National Fenestration Rating Council. This is a national organization of fenestration product manufacturers, glazing manufacturers, manufacturers of related materials, utilities, state energy offices, laboratories, home builders, specifiers (architects), and public interest groups.

> ***NOTE*:** This organization is designated by the Commission as the Supervisory Entity, which is responsible for rating the U-factors and solar heat gain coefficients of manufactured fenestration products (i.e., windows, skylights, glazed doors) that must be used in compliance calculations. See also Fenestration Area and Fenestration Product.

NFRC 100 is the National Fenestration Rating Council document titled "NFRC 100: Procedure for Determining Fenestration Product U-factors." (2011) NFRC 100 includes procedures for the Component Modeling Approach (CMA) and site built fenestration formerly included in a separate document, NFRC 100-SB.

NFRC 200 is the National Fenestration Rating Council document titled "NFRC 200: Procedure for Determining Fenestration Product Solar Heat Gain Coefficients and Visible Transmittance at Normal Incidence." (2011).

NFRC 202 is the National Fenestration Rating Council document titled "NFRC 202: Procedures for Determining Translucent Fenestration Product Visible Transmittance at Normal Incidence." (2011).

NFRC 203 is the National Fenestration Rating Council document titled "NFRC 203: Procedure for Determining Visible Transmittance of Tubular Daylighting Devices." (2012).

NFRC 400 is the National Fenestration Rating Council document titled "NFRC 400: Procedure for Determining Fenestration Product Air Leakage." (2010).

NONDEPLETABLE SOURCES is defined as energy that is not obtained from depletable sources. Also referred to as renewable energy, including solar and wind power. See Energy Obtained from Nondepletable Sources.

NONDUCTED SYSTEM Is an air conditioner or heat pump that is designed to be permanently installed equipment and directly heats or cools air within the conditioned space using one or more indoor coils that are mounted on room walls and/or ceilings. The unit may be of a modular design that allows for combining multiple outdoor coils and compressors to create one overall system.

NONRESIDENTIAL BUILDING is any building which is identified in the California Building Code Table; Description of Occupancy as Group A, B, E, F, H, M, or S; and is a U; as defined by Part2 of Title24, CCR.

> ***NOTE*:** Requirements for high-rise residential buildings and hotels/motels are included in the nonresidential sections of Part 6.

NONRESIDENTIAL BUILDING OCCUPANCY TYPES are building types in which a minimum of 90 percent of the building floor area functions as one of the following, which do not qualify as any other Building Occupancy Types more specifically defined in Section 100.1, and which do not have a combined total of more than 10 percent of the area functioning of any Nonresidential Function Areas specifically defined in Section 100.1:

> **Auditorium Building** is a public building in which a minimum of 90 percent of the building floor area are rooms with fixed seating that are primarily used for public meetings or gatherings.
>
> **Classroom Building** is a building for an educational institution in which a minimum of 90 percent of the building floor area are classrooms or educational laboratories.
>
> **Commercial and Industrial Storage Building** is a building for which a minimum or 90% of the building floor area is used for storing items.
>
> **Convention Center Building** is a building in which a minimum of 90 percent of the building floor area are rooms for meetings and conventions, which have neither fixed seating nor fixed staging.

Financial Institution Building is a building in which a minimum of 90 percent of the building floor area are rooms used for an institution which collects funds from the public and places them in financial assets, such as deposits, loans, and bonds.

General Commercial and Industrial Work Building is a building in which a minimum of 90 percent of the building floor area are rooms for performing a craft, assembly or manufacturing operation.

Grocery Store Building is a building in which a minimum of 90 percent of the building floor area is sales floor for the sale of foodstuffs.

Library Building is a building which is in which a minimum of 90 percent of the building floor area are rooms use as a repository of literary materials kept for reading or reference, such as books, periodicals, newspapers, pamphlets and prints..

Medical Buildings and Clinic Buildings are non "I" occupancy buildings in which a minimum of 90 percent of the building floor area are rooms where medical or clinical care is provided, does not provide overnight patient care, and is used to provide physical and mental care through medical, dental, or psychological examination and treatment.

Office Building is a building of CBC Group B Occupancy in which a minimum of 90 percent of the building floor area are rooms in which business, clerical or professional activities are conducted.

Parking Garage Building is a building in which a minimum of 90 percent of the building floor area is for the purpose of parking vehicles, which consists of at least a roof over the parking area enclosed with walls on all sides. The building includes areas for vehicle maneuvering to reach designated parking spaces. If the roof of a parking structure is also used for parking, the section without an overhead roof is considered an outdoor parking lot instead of a parking garage.

Religious Facility Building is a building in which a minimum of 90 percent of the floor area in the building floor area are rooms for assembly of people to worship.

Restaurant Building is a building in which a minimum of 90 percent of the building floor area are rooms in which food and drink are prepared and served to customers in return for money.

School Building is a building in which a minimum of 90 percent of the building floor area is used for an educational institution, but in which less than 90 percent of the building floor area is classrooms or educational laboratories, and may include an auditorium, gymnasium, kitchen, library, multi-purpose room, cafeteria, student union, or workroom. A maintenance or storage building is not a school building.

Theater Building is a building in which a minimum of 90 percent of the building floor area are rooms having tiers of rising seats or steps for the viewing of motion pictures, or dramatic performances, lectures, musical events and similar live performances.

NONRESIDENTIAL COMPLIANCE MANUAL is the manual developed by the Commission, under Section 25402.1 (e) of the Public Resources Code, to aid designers, builders, and contractors in meeting the energy efficiency requirements for nonresidential, high-rise residential, and hotel/motel buildings.

NONRESIDENTIAL FUNCTION AREAS are those areas, rooms, and spaces within Nonresidential Buildings which fall within the following particular definitions, and are defined according to the most specific definition:

Aisle Way is the passage or walkway between storage racks in a Commercial or Industrial Storage Building, where the racks are permanently anchored to the floor and used to store materials such as goods and merchandise, **Atrium** is a large-volume indoor space created by openings between two or more stories but is not used for an enclosed stairway, elevator hoistway, escalator opening, or utility shaft for plumbing, electrical, air-conditioning or other equipment.

Auditorium Room is a room with fixed seats used for public meetings or gatherings.

Auto Repair Bay is a room or area used to repair automotive equipment and/or vehicles.

Beauty Salon is a room or area in which the primary activity is manicures, pedicures, facials, or the cutting or styling of hair.

Civic Meeting Place is a space in a government building designed or used for public debate, discussion, or public meetings of governmental bodies.

Classroom, Lecture, Training, Vocational Room is a room or area where an audience or class receives instruction.

Commercial and Industrial Storage Area is a room or area used for storing of items such as goods and merchandise.

Commercial and Industrial Storage Area (refrigerated) is a room or area used for storing items items such as goods and merchandise where mechanical refrigeration is used to maintain the space temperature at 55° F or less.

Convention, Conference, and Meeting Centers are rooms or areas that are designed or used for meetings, conventions or events, and that have neither fixed seating nor fixed staging.

Corridor is a passageway or route into which compartments or rooms open.

Dining is a room or area where meals that are served to the customers will be consumed.

Electrical/Mechanical/Telephone Room is a room in which the building's electrical switchbox or control panels, telephone switchbox, and/or HVAC controls or equipment is located.

Exercise Center or Gymnasium is a room or area equipped for gymnastics, exercise equipment, or indoor athletic activities.

Exhibit, Museum Area is a room or area in a museum that has for its primary purpose exhibitions, having neither fixed seating nor fixed staging. An exhibit does not include a gallery or other place where art is for sale. An exhibit does not include a lobby, conference room, or other occupancies where the primary function is not exhibitions.

Financial Transaction Area is a room or area used by an institution that collects funds from the public and places them in financial assets, such as deposits, loans and bonds, and includes tellers, work stations, and customers' waiting areas; to complete financial transactions. Financial transaction areas do not include private offices, hallways, restrooms, or other support areas.

General Commercial and Industrial Work Area is a room or area in which an art, craft, assembly or manufacturing operation is performed. Lighting installed in these areas is classified as follows:

High bay: Where the luminaires are 25 feet or more above the floor.

Low bay: Where the luminaires are less than 25 feet above the floor.

Precision: Where visual tasks of small size or fine detail such as electronics assembly, fine woodworking, metal lathe operation, fine hand painting and finishing, egg processing operations, or tasks of similar visual difficulty are performed.

Grocery Sales Area is a room or area that has as its primary purpose the sale of foodstuffs requiring additional preparation prior to consumption.

Hotel Function Area is a hotel room or area such as a hotel ballroom, meeting room, exhibit hall or conference room, together with pre-function areas and other spaces ancillary to its function.

Kitchen/Food Preparation is a room or area with cooking facilities or an area where food is prepared.

Laboratory, Scientific is a room or area where research, experiments, and measurement in medical and physical sciences are performed requiring examination of fine details. The area may include workbenches, countertops, scientific instruments, and associated floor spaces. Scientific laboratory does not refer to film, computer, and other laboratories where scientific experiments are not performed.

Laundry is a room or area primarily designed or used for laundering activities.

Library Area is a room or area primarily designed or used as a repository for literary materials, such as books, periodicals, newspapers, pamphlets and prints, kept for reading or reference.

Reading Area is a room or area in a library containing tables, chairs, or desks for patrons to use for the purpose of reading books and other reference documents. Library reading areas include reading, circulation, and checkout areas. Reading areas do not include private offices, meeting, photocopy, or other rooms not used specifically for reading by library patrons.

Stack Area is a room or area in a library with grouping of shelving sections. Stack aisles include pedestrian paths located in stack areas.

Lobby:

Hotel is the contiguous area in a hotel/motel between the main entrance and the front desk, including reception, waiting and seating areas.

Main Entryis the contiguous area in buildings other than hotel/motel that is directly located by the main entrance of the building through which persons must pass, including any ancillary reception, waiting and seating areas.

Locker or Dressing Room is a room or area for changing clothing, sometimes equipped with lockers.

Lounge is a room or area in a public place such as a hotel, airport, club, or bar, where you can sit, wait and relax.

Mall is a roofed or covered common pedestrian area within a mall building that serves as access for two or more tenants.

Medical and Clinical Care Area is a non “I” occupancy room or area in a building that does not provide overnight patient care and that is used to provide physical and mental care through medical, dental, or psychological examination and treatment, including, but not limited to, laboratories and treatment spaces.

Museum is a room or area in which the primary function is the care or exhibit of works of artistic, historical, or scientific value. A museum does not include a gallery or other place where art is for sale. A museum does not include a lobby, conference room, or other occupancies where the primary function is not the care or exhibit of works of artistic, historical, or scientific value.

Office Area is a room, area in a building of CBC Group B Occupancy in which business, clerical or professional activities are conducted.

Open Area is a warehouse facility term describing a large unobstructed area that is typically used for the handling and temporary storage of goods.

Parking Garage Areas include the following:

Parking Areas are the areas of a Parking Garage used for the purpose of parking and maneuvering of vehicles on a single floor. Parking areas include sloping floors of a parking garage. Parking areas do not include Daylight Transition Zones, Dedicated Ramps, or the roof of a Parking Garage, which may be present in a Parking Garage.

Daylight Transition Zone in a Parking Garage is the interior path of travel for vehicles to enter a parking garage as needed to transition from exterior daylight levels to interior light levels. Daylight Transition Zones only include the path of vehicular travel and do not include adjacent Parking Areas.

Dedicated Ramps in Parking Garages are driveways specifically for the purpose of moving vehicles between floors of a parking garage and which have no adjacent parking. Dedicated ramps do not include sloping floors of a parking structure, which are considered Parking Areas.

Religious Worship Area is a room or area in which the primary function is for an assembly of people to worship. Religious worship does not include classrooms, offices, or other areas in which the primary function is not for an assembly of people to worship.

Restroom is a room providing personal facilities such as toilets and washbasins.

Retail Merchandise Sales Area is a room or area in which the primary activity is the sale of merchandise.

Server Room is a room smaller than 500 square feet, within a larger building, in which networking equipment and Information Technology (IT) server equipment is housed, and a minimum of five IT severs are installed in frame racks.

Server Aisle is an aisle of racks of Information Technology (IT) server equipment in a Server Room. While networking equipment may also be housed on these racks, it is largely a room to manage server equipment.

Stairs is a series of steps providing passage for persons from one level of a building to another, including escalators.

Stairwell is a vertical shaft in which stairs are located.

Support Area is a room or area used as a passageway, utility room, storage space, or other type of space associated with or secondary to the function of an occupancy that is listed in these regulations.

Tenant Lease Area is a room or area in a building intended for lease for which a specific tenant is not identified at the time of building permit application.

Theater Areas include the following:

Motion Picture Theater is an assembly room or area with tiers of rising seats or steps for the showing of motion pictures.

Performance Theater is an assembly room or area with tiers of rising seats or steps for the viewing of dramatic performances, lectures, musical events and similar live performances.

Transportation Function Area is the ticketing area, waiting area, baggage handling areas, concourse, in an airport terminal, bus or rail terminal or station, subway or transit station, or a marine terminal.

Videoconferencing Studio is a room with permanently installed videoconferencing cameras, audio equipment, and playback equipment for both audio-based and video-based two-way communication between local and remote sites.

Vocational Area is a room or area used to provide training in a special skill to be pursued as a trade.

Waiting Area is an area other than a hotel lobby or main entry lobby normally provided with seating and used for people waiting.

Wholesale Showroom is a room or area where samples of merchandise are displayed.

NONSTANDARD PART LOAD VALUE (NPLV) is a single-number part-load efficiency figure of merit for chillers referenced to conditions other than IPLV conditions. (See “Integrated Part Load Value”).

NORTH-FACING See Orientation.

NSHP GUIDEBOOK is the New Solar Homes Partnership Guidebook, currently adopted by the Energy Commission.

OCCUPIABLE SPACE is any enclosed space inside the pressure boundary and intended for human activities, including, but not limited to, all habitable spaces, toilets, closets, halls, storage and utility areas, and laundry areas.

OPEN COOLING TOWER is an open or direct contact cooling tower which exposes water directly to the cooling atmosphere, thereby transferring the source heat load from the water directly to the air by a combination of heat and mass transfer.

ORIENTATION, CARDINAL is one of the four principal directional indicators, north, east, south, and west, which are marked on a compass. Also called cardinal directions.

ORIENTATION, EAST-FACING is oriented to within 45 degrees of true east, including 45°00'00" south of east (SE), but excluding 45°00'00" north of east (NE).

ORIENTATION, NORTH-FACING is oriented to within 45 degrees of true north, including 45°00'00" east of north (NE), but excluding 45°00'00' west of north (NW).

ORIENTATION, SOUTH-FACING is oriented to within 45 degrees of true south including 45°00'00" west of south (SW), but excluding 45°00'00" east of south (SE).

ORIENTATION, WEST-FACING is oriented to within 45 degrees of true west, including 45°00'00" north of due west (NW), but excluding 45°00'00" south of west (SW).

OUTDOOR AIR (OUTSIDE AIR) is air taken from outdoors and not previously circulated in the building.

OUTDOOR AREAS are areas external to a building. These include but are not limited to the following areas:

Building entrance way is the external area of any operable doorway in or out of a building, including overhead doors. These areas serve any doorway, set of doors (including elevator doors such as in parking garages), turnstile, vestibule, or other form of portal that is ordinarily used to gain access to the building by its users and occupants. Where buildings have separate one-way doors to enter and to leave, this also includes any area serving any doors ordinarily used to leave the building.

Building façade is the exterior surfaces of a building, not including horizontal roofing, signs, and surfaces not visible from any public accessible viewing location.

Canopy is a permanent structure, other than a parking garage area, consisting of a roof and supporting building elements, with the area beneath at least partially open to the elements. A canopy may be freestanding or attached to surrounding structures. A canopy roof may serve as the floor of a structure above.

Carport is a covered, open-sided structure designed or used primarily for the purpose of parking vehicles, having a roof over the parking area. Typically, carports are free-standing or projected from the side of the building and are only two or fewer car lengths deep. A Carport is not a Garage.

Hardscape is the area of an improvement to a site that is paved or has other structural features such as curbs, plazas, entries, parking lots, site roadways, driveways, walkways, sidewalks, bikeways, water features and pools, storage or service yards, loading docks, amphitheaters, outdoor sales lots, and private monuments and statuary.

Outdoor sales frontage is the portion of the perimeter of an outdoor sales area immediately adjacent to a street, road, or public sidewalk.

Outdoor sales lot is an uncovered paved area used exclusively for the display of vehicles, equipment or other merchandise for sale. All internal and adjacent access drives, walkway areas, employee and customer parking areas, vehicle service or storage areas are not outdoor sales lot areas, but are considered hardscape.

Parking lot is an uncovered area for the purpose of parking vehicles. Parking lot is a type of hardscape.

Paved area is an area that is paved with concrete, asphalt, stone, brick, gravel, or other improved wearing surface, including the curb.

Principal viewing location is anywhere along the adjacent highway, street, road or sidewalk running parallel to an outdoor sales frontage.

Public monuments are statuary, buildings, structures, and/or hardscape on public land.

Sales canopy is a canopy specifically to cover and protect an outdoor sales area.

Stairways and Ramps. Stairways are one or more flights of stairs with the necessary landings and platforms connecting them to form a continuous and uninterrupted passage from one level to another. An exterior stairway is open on at least one side, except for required structural columns, beams, handrails and

guards. The adjoining open areas shall be either yards, courts or public ways. The other sides of the exterior stairway need not be open. Ramps are walking surfaces with a slope steeper than 5 percent.

Vehicle service station is a gasoline, natural gas, diesel, or other fuel dispensing station.

OUTDOOR LIGHTING ZONE is a geographic area designated by the California Energy Commission in accordance with Part 1, Section 10-114, that determines requirements for outdoor lighting, including lighting power densities and specific control, equipment or performance requirements. Lighting zones are numbered LZ1, LZ2, LZ3 and LZ4.

OUTSIDE AIR See Outdoor Air.

PACKAGED AIR CONDITIONER OR HEAT PUMP is an air conditioner or heat pump that combines both the condenser and air handling capabilities in a single enclosure or package.

PARALLEL FAN-POWERED TERMINAL UNIT is a terminal unit that combines a VAV damper in parallel with a fan that only runs when the terminal unit is providing heating to the space.

PART 6 is Title 24, Part 6 of the California Code of Regulations.

PARTY PARTITION is a wall, floor, or ceiling that separates the conditioned spaces of two different tenants.

PART-LOAD OPERATION occurs when a loaded air compressor is operating below its maximum rated capacity.

PARTICLE SIZE EFFICIENCY is the fraction (percentage) of particles that are captured on air filter equipment as determined during rating tests conducted in accordance with ASHRAE Standard 52.2 or AHRI Standard 680. Particle Size Efficiency is measured in three particle size ranges: 0.3-1.0, 1.0-3.0, 3.0-10 microns.

PERM is equal to 1 grain of water vapor transmitted per 1 square foot per hour per inch of mercury pressure difference.

PLENUM is an air compartment or chamber, including uninhabited crawl space, areas above a ceiling or below a floor, including air spaces below raised floors of computer/data processing centers, or attic spaces, to which one or more ducts are connected and which forms part of either the supply-air, return-air or exhaust air system, other than the occupied space being conditioned.

POOLS, ANSI/NSPI-5 is the American National Standards Institute and National Spa and Pool Institute document titled “American National Standard for Residential Inground Swimming Pools” 2003 (ANSI/NSPI-5 2003).

POOLS, AUXILIARY POOL LOADS are features or devices that circulate pool water in addition to that required for pool filtration, including, but not limited to, solar pool heating systems, filter backwashing, pool cleaners, waterfalls, fountains, and spas.

POOLS, BACKWASH VALVE is a diverter valve designed to backwash filters located between the circulation pump and the filter, including, but not limited to, slide, push-pull, multi-port, and full-flow valves.

POOLS, MULTI-SPEED PUMP is a pump capable of operating at two (2) or more speeds and includes two-speed and variable-speed pumps.

POOLS, NSF/ANSI 50 is the NSF International (formerly National Sanitation Foundation) Standard and American National Standards Institute document titled “Circulation System Components and Related Materials for Swimming Pools, Spas/Hot Tubs” 2005 (NSF/ANSI 50 – 2005).

POOLS, RESIDENTIAL are permanently installed residential in-ground swimming pools intended to use by a single-family home for noncommercial purposes and with dimensions as defined in ANSI/NSPI-5.

PRESSURE BOUNDARY is the primary air enclosure boundary separating indoor and outdoor air. For example, a volume that has more leakage to the outside than to the conditioned space would be considered outside the pressure boundary. Exposed earth in a crawlspace or basement shall not be considered part of the pressure boundary.

PRIMARY AIRFLOW is the airflow (cfm or L/s) supplied to the zone from the air-handling unit at which the outdoor air intake is located. It includes outdoor intake air and recirculated air from that air-handling unit but does not include air transferred or air recirculated to the zone by other means.

PRIMARY STORAGE is compressed air storage located between the compressors and any dryers or other conditioning equipment.

PROCESS is an activity or treatment that is not related to the space conditioning, lighting, service water heating, or ventilating of a building as it relates to human occupancy.

PROCESS BOLER is a type of boiler with a capacity (rated maximum input) of 300,000 Btus per hour (Btu/h) or more that serves a process.

PROCESS, COVERED are processes that are regulated under Part 6, which include datacom equipment, laboratory exhaust, garage exhaust, commercial kitchen ventilation, refrigerator warehouses, supermarket refrigeration systems, compressed air systems, process cooling towers, process boilers.

PROCESS, EXEMPT is process that is not listed as a covered process.

PROCESS LOAD is a load resulting from a process.

PROCESS LOAD, COVERED is a load resulting from a covered process. (see Stds.)

PROCESS LOAD, EXEMPT is a load resulting from an exempt process.

PROCESS SPACE is a space that is thermostatically controlled to maintain a process environment temperature less than 55º F or to maintain a process environment temperature greater than 90º F for the whole space that the system serves, or that is a space with a space-conditioning system designed and controlled to be incapable of operating at temperatures above 55º F or incapable of operating at temperatures below 90º F at design conditions.

PROPOSED DESIGN BUILDING is a proposed building being modeled using rules described in the Alternative Calculation Method Manual. In order for a building to comply with the standards, the proposed building energy use must be less than or equal to the Standard Design Building energy use and meet the mandatory requirements in the Title 24 Building Energy Efficiency Standards.

PROPOSED DESIGN BUILDING ENERGY USE is the predicted energy use of proposed building derived from application of the building energy use modeling rules described in the Alternative Calculation Method (ACM) Approval Manual.

PUBLIC ADVISER is the Public Adviser of the Commission.

PUBLIC AREAS are spaces generally open to the public at large, customers or congregation members, or similar spaces where occupants need to be prevented from controlling lights for safety, security, or business reasons.

R-VALUE is the measure of the thermal resistance of insulation or any material or building component expressed in ft^2-hr-^oF/Btu.

RADIANT BARRIER is a highly reflective, low emitting material installed at the underside surface of the roof deck and the inside surface of gable ends or other exterior vertical surfaces in attics to reduce solar heat gain.

RAISED FLOOR is a floor (partition) over a crawl space, or an unconditioned space, or ambient air.

READILY ACCESSIBLE is capable of being reached quickly for operation, repair or inspection, without requiring climbing or removing obstacles, or resorting to access equipment.

REAR See Back.

RECOOL is the cooling of air that has been previously heated by space-conditioning equipment or systems serving the same building.

RECORD DRAWINGS are drawings that document the as installed location and performance data on all lighting and space conditioning system components, devices, appliances and equipment, including but not limited to wiring sequences, control sequences, duct and pipe distribution system layout and sizes, space

conditioning system terminal device layout and air flow rates, hydronic system and flow rates, and connections for the space conditioning system. Record drawings are sometimes called “as builts.”

RECOVERED ENERGY is energy used in a building that (1) is recovered from space conditioning, service water heating, lighting, or process equipment after the energy has performed its original function; (2) provides space conditioning, service water heating, or lighting; and (3) would otherwise be wasted.

RECOVERY EFFICIENCY is one measure of the efficiency of water heaters. It is required for water heating energy calculations for some types of water heaters. It is a measure of the percentage of heat from combustion of gas or oil which is transferred to the water. For non-storage type water heaters, the recovery efficiency is really a thermal efficiency.

REFERENCE APPENDICES are the Reference Joint Appendices (JA), the Reference Residential Appendices (RA), and the Reference Nonresidential Appendices (NA).

REFERENCE COMPUTER PROGRAM is the reference method against which other methods are compared. For the Nonresidential Standards, the reference computer program is DOE 2.1E. For the low-rise Residential Standards the reference computer program is CALRES.

REFERENCE JOINT APPENDICES Are the Reference Joint Appendices published by the Commission.

REFERENCE NONRESIDENTIAL APPENDICES Are the Nonresidential Appendices published by the Commission.

REFERENCE RESIDENTIAL APPENDICES Are the Residential Appendices published by the Commission.

REFLECTANCE, SOLAR is the ratio of the reflected solar flux to the incident solar flux.

REFRIGERANT CHARGE is to the amount of refrigerant that is installed or “charged” into an air conditioner or heat pump. The refrigerant is the working fluid. It is compressed and becomes a liquid as it enters the condenser. The hot liquid is cooled in the condenser and flows to the evaporator where it released through the expansion valve. When the pressure is released, the refrigerant expands into a gas and cools. Air is passed over the evaporator to provide the space cooling. When an air conditioner or heat pump has too much refrigerant (overcharged) the compressor may be damaged. When an air conditioner has too little refrigerant (undercharged), the efficiency of the unit is reduced. A thermostatic expansion valve (TXV) can mitigate the impact of improper refrigerant charge.

REFRIGERATED CASE is a manufactured commercial refrigerator or freezer, including but not limited to display cases, reach-in cabinets, meat cases, and frozen food and soda fountain units.

REFRIGERATED SPACE is a space constructed for storage or handling of products, where mechanical refrigeration is used to maintain the space temperature at 55° F or less.

REFRIGERATED WAREHOUSE is a building or a space greater than or equal to 3,000 square feet constructed for storage or handling of products, where mechanical refrigeration is used to maintain the space temperature at 55°F or less.

REGISTERED DOCUMENT means the document has been submitted to a residential or nonresidential data registry for retention, and the data registry has assigned a unique registration number to the document.

REGISTRATION PROVIDER is an organization that administers a data registry service that conforms to the requirements of Reference Joint Appendix JA-7.

REHEAT is the heating of air that has been previously cooled by cooling equipment or supplied by an economizer.

RELOCATABLE PUBLIC SCHOOL BUILDING is a relocatable building as defined by Title 24, Part 1, Section 4-314, which is subject to Title 24, Part 1, Chapter 4, Group 1.

REPAIR is the reconstruction or renewal for the purpose of maintenance of any component, system or equipment of an existing building. Repairs shall not increase the preexisting energy consumption of the repaired component, system, or equipment. Replacement of any component, system or equipment for which there are requirements in the standards is considered an alteration and not a repair.

REPLACEMENT AIR is outdoor air that is used to replace air removed from a building through an exhaust system. Replacement air may be derived from one or more of the following: makeup air, supply air, transfer air and infiltration. However, the ultimate source of all replacement air is outdoor air. When replacement air exceeds exhaust, the result is exfiltration.

> **Supply Air** is air entering a space from an air-conditioning, heating or ventilating system for the purpose of comfort conditioning. Supply air is generally filtered, fan-forced, and heated, cooled, humidified or dehumidified as necessary to maintain specified temperature and humidity conditions.
>
> **Transfer Air** is air transferred, whether actively by fans or passively by pressure differentials, from one room to another within a building through openings in the room envelope.
>
> **Infiltration Air** is outdoor air that enters a building or space through openings in the building or space envelope due to negative pressure in the space or building relative to the exterior of the building envelope.

RESIDENTIAL COMPLIANCE MANUAL is the manual developed by the Commission, under Section 25402.1 of the Public Resources Code, to aid designers, builders, and contractors in meeting energy efficiency standards for low-rise residential buildings.

RESIDENTIAL SPACE TYPE is one of the following:

> **Bathroom** is a room or area containing a sink used for personal hygiene, toilet, shower, or a tub.
>
> **Closet** is a non-habitable room used for the storage of linens, household supplies, clothing, non-perishable food, or similar uses, and which is not a hallway or passageway.
>
> **Garage** is a non-habitable building or portion of building, attached to or detached from a residential dwelling unit, in which motor vehicles are parked.
>
> **Kitchen** is a room or area used for cooking, food storage and preparation and washing dishes, including associated counter tops and cabinets, refrigerator, stove, ovens, and floor area.
>
> **Laundry** is a non-habitable room or space which contains plumbing and electrical connections for a washing machine or clothes dryer.
>
> **Storage Building** is a non-habitable detached building used for the storage of tools, garden equipment, or miscellaneous items.
>
> **Utility Room** is a non-habitable room or building which contains only HVAC, plumbing, or electrical controls or equipment; and which is not a bathroom, closet, garage, or laundry room.**RIGHT SIDE** is the right side of the building as one faces the front facade from the outside (see Front). This designation is used to indicate the orientation of fenestration and other surfaces, especially in model homes that are constructed in multiple orientations.**ROOF** is the outside cover of a building or structure including the structural supports, decking, and top layer that is exposed to the outside with a slope less than 60 degrees from the horizontal.**ROOF, LOW-SLOPED** is a roof that has a ratio of rise to run of 2:12 or less (9.5 degrees from the horizontal).**ROOF, STEEP-SLOPED** is a roof that has a ratio of rise to run of greater than 2:12 (9.5 degrees from the horizontal).**ROOF RECOVER BOARD** is a rigid type board, installed directly below a lowsloped roof membrane, with or without above deck thermal insulation, to: (a) improve a roof system's compressive strength, (b) physically separate the roof membrane from the thermal insulation, (c) physically separate a new roof covering from an underlying roof membrane as part of a roof overlay project.**ROOFING PRODUCT** is the top layer(s) of the roof that is exposed to the outside, which has properties including but not limited to solar reflectance, thermal emittance, and mass.

RUNOUT is piping that is no more than 12 feet long and that connects to a fixture or an individual terminal unit.

R-VALUE is the measure of the thermal resistance of insulation or any material or building component expressed in (ft^2-hr °F)/Btu.

SATURATED CONDENSING TEMPERATURE (CONDENSING TEMPERATURE) is: (a) for single component and azeotropic refrigerants, the saturation temperature corresponding to the refrigerant pressure at the

condenser entrance, or (b) for zeotropic refrigerants, the arithmetic average of the Dew Point and Bubble Point temperatures corresponding to the refrigerant pressure at the condenser entrance.

SC See Shading Coefficient.

SCIENTIFIC EQUIPMENT is measurement, testing or metering equipment used for scientific research or investigation, including but not limited to manufactured cabinets, carts and racks.

SEASONAL ENERGY EFFICIENCY RATIO (SEER) is the total cooling output of an air conditioner in Btu during its normal usage period for cooling divided by the total electrical energy input in watt-hours during the same period, as determined using the applicable test method in the Appliance Efficiency Regulations.

SERVICE WATER HEATING is heating of water for sanitary purposes for human occupancy, other than for comfort heating.

SHADING is the protection from heat gains because of direct solar radiation by permanently attached exterior devices or building elements, interior shading devices, glazing material, or adherent materials.

SHADING COEFFICIENT (SC) is the ratio of the solar heat gain through a fenestration product to the solar heat gain through an unshaded 1/8-inch-thick clear double strength glass under the same set of conditions. For nonresidential, high-rise residential, and hotel/motel buildings, this shall exclude the effects of mullions, frames, sashes, and interior and exterior shading devices.

SHOWER HEAD is a fixture for directing the spray of water in a shower. A shower head may incorporate one or more sprays, nozzles or openings. All components that are supplied standard together and function from one inlet (i.e., after the mixing valve) form a single shower head.

SIGN definitions include the following:

> **Electronic Message Center (EMC)** is a pixilated image producing electronically controlled sign formed by any light source. Bare lamps used to create linear lighting animation sequences through the use of chaser circuits, also known as “chaser lights” are not consider an EMC.
>
> **Illuminated face** is a side of a sign that has the message on it. For an exit sign it is the side that has the word “EXIT” on it.
>
> **Sign, cabinet** is an internally illuminated sign consisting of frame and face, with a continuous translucent message panel, also referred to as a panel sign.
>
> **Sign, channel letter** is an internally illuminated sign with multiple components, each built in the shape of an individual three dimensional letters or symbol that are each independently illuminated, with a separate translucent panel over the light source for each element.
>
> **Sign, double-faced** is a sign with two parallel opposing faces.
>
> **Sign, externally illuminated** is any sign or a billboard that is lit by a light source that is external to the sign directed towards and shining on the face of the sign.
>
> **Sign, internally illuminated** is a sign that is illuminated by a light source that is contained inside the sign where the message area is luminous, including cabinet signs and channel letter signs.
>
> **Sign, traffic** is a sign for traffic direction, warning, and roadway identification.
>
> **Sign, unfiltered** is a sign where the viewer perceives the light source directly as the message, without any colored filter between the viewer and the light source, including neon, cold cathode, and LED signs.

SINGLE FAMILY RESIDENCE is a building that is of Occupancy Group R-3.

SINGLE PACKAGE VERTICAL AIR CONDITIONER (SPVAC) is a type of air-cooled small or large commercial package air-conditioning and heating equipment; factory assembled as a single package having its major components arranged vertically, which is an encased combination of cooling and optional heating components; is intended for exterior mounting on, adjacent interior to, or through an outside wall; and is powered by single or three-phase current. It may contain separate indoor grille(s), outdoor louvers, various ventilation options, indoor free air discharge, ductwork, wall plenum, or sleeve. Heating components may

include electrical resistance, steam, hot water, gas, or no heat but may not include reverse cycle refrigeration as a heating means.

SINGLE PACKAGE VERTICAL HEAT PUMP (SPVHP) is an SPVAC that utilizes reverse cycle refrigeration as its primary heat source, with secondary supplemental heating by means of electrical resistance, steam, hot water, or gas.

SINGLE ZONE is an HVAC system with a supply fan (and optionally a return fan) and heating and/or cooling heat exchangers (e.g. DX coil, chilled water coil, hot water coil, furnace, electric heater) that serves a single thermostatic zone. This system may or may not be constant volume.

SITE SOLAR ENERGY is thermal, chemical, or electrical energy derived from direct conversion of incident solar radiation at the building site.

SLAB-ON-GRADE is an exterior concrete floor in direct contact with the earth below the building.

SMACNA is the Sheet Metal and Air-conditioning Contractors National Association.

SMACNA HVAC DUCT CONSTRUCTION STANDARDS is the Sheet Metal Contractors' National Association document "HVAC Duct Construction Standards Metal and Flexible - 3rd Edition," 2006 (2006ANSI/SMACNA-006-2006 HVAC Duct Construction Standards Metal and Flexible 3rd Edition).

SMACNA RESIDENTIAL COMFORT SYSTEM INSTALLATION STANDARDS MANUAL is the Sheet Metal Contractors' National Association document titled "Residential Comfort System Installation Standards Manual, Seventh Edition." (1998).

SOLAR REFLECTANCE See Reflectance.

SOLAR REFLECTANCE INDEX (SRI) is a measure of the roof's ability to reject solar heat which includes both reflectance and emittance.

SOLAR SAVINGS FRACTION (SSF) is the fraction of domestic hot water demand provided by a solar water-heating system.

SOLAR ZONE is a section of the roof designated and reserved for the future installation of a solar electric or solar thermal system.

SOUTH-FACING See Orientation.

SPA is a vessel that contains heated water in which humans can immerse themselves, is not a pool, and is not a bathtub.

SPACE-CONDITIONING SYSTEM is a system that provides heating, ventilating or cooling within or associated with conditioned spaces in a building, and may incorporate use of components such as chillers/compressors, distribution systems (air ducts, water piping, refrigerant piping), pumps, air handlers, cooling and heating coils, air or water cooled condensers, economizers, terminal units, and associated controls.

SPACER, ALUMINUM is a metal channel that is used either against the glass (sealed along the outside edge of the insulated glass unit), or separated from the glass by one or more beads of caulk, which is used to separate panes of glass in an insulated glass unit.

SPACER, INSULATING is a non-metallic, relatively non-conductive material, usually of rubber compounds, that is used to separate panes of glass in an insulated glass unit.

SPACER, OTHER is a wood, fiberglass, or composite material that is used as a spacer between panes of glass in insulated glass units.

SPACER, SQUIGGLE is a flexible material, usually butyl, formed around a thin corrugated aluminum strip that is used as a spacer in insulated glass units.

SPECIFIC HEAT is the quantity of heat that must be added to a unit mass of a material to increase its temperature by one degree. Typical units are Btu/°F-lb.

SPLIT SYSTEM AIR CONDITIONER OR HEAT PUMP is an air conditioner or heat pump that has physically separate condenser and air handling units that work together as a single cooling system.

STANDARD DESIGN BUILDING is a building that complies with the mandatory and prescriptive requirements in the Title 24 Building Energy Efficiency Standards by using the building energy modeling rules described in the Alternative Calculation Method (ACM) Approval Manual.

STANDARDS See Building Energy Efficiency Standards.

STANDBY LOSS, BTU/HR is the heat lost per hour from the stored water above room temperature. It is one of the measures of efficiency of water heaters required for water heating energy calculations for some types of water heaters. This standby loss is expressed as Btu/hr.

STANDBY LOSS, PERCENT is the ratio of heat lost per hour to the heat content of the stored water above room temperature. It is one of the measures of efficiency of water heaters required for water heating energy calculations for some types of water heaters. Standby loss is expressed as a percentage.

STORAGE, COLD is a storage area within a refrigerated warehouse where space temperatures are maintained at or above 32° F.

STORAGE, COOL is a storage area within a refrigerated warehouse where space temperatures are maintained between 32° F and 55° F.

STORAGE, FROZEN is a storage area within a refrigerated warehouse where the space temperatures are maintained below 32° F.

SUBORDINATE OCCUPANCY is any occupancy type, in mixed occupancy buildings, that is not the dominant occupancy. See Dominant Occupancy, Mixed Occupancy.

SUCTION LINE is the refrigerant line that leads from the evaporator to the condenser in a split system air conditioner or heat pump. This line is insulated since it carries refrigerant at a low temperature.

SUSPENDED FILMS are low-e coated plastic films stretched between the elements of the spacers between panes of glazing; acts as a reflector to slow the loss of heat from the interior to the exterior.

SYSTEM is a combination of equipment, controls, accessories, interconnecting means, or terminal elements by which energy is transformed to perform a specific function, such as space conditioning, service water heating, or lighting.

TDV ENERGY See Time Dependent Valuation (TDV) Energy.

THERMAL BREAK WINDOW FRAME is metal fenestration frames that are not solid metal from the inside to the outside, but are separated in the middle by a material, usually urethane, with a lower conductivity.

THERMAL CONDUCTIVITY is the quantity of heat that will flow through a unit area of the material per hour when the temperature difference through the material is one degree.

THERMAL EMITTANCE See Emittance, Thermal.

THERMAL MASS is solid or liquid material used to store heat for later heating use or for reducing cooling requirements.

THERMAL RESISTANCE (R) is the resistance over time of a material or building component to the passage of heat in (hr. x ft.^{2} x °F)/Btu.

THERMOSTATIC EXPANSION VALVE (TXV) is a refrigerant metering valve, installed in an air conditioner or heat pump, which controls the flow of liquid refrigerant entering the evaporator in response to the superheat of the gas leaving it.

TIME DEPENDENT VALUATION (TDV) ENERGY is the time varying energy caused to be used by the building to provide space conditioning and water heating and for specified buildings lighting. TDV energy accounts for the energy used at the building site and consumed in producing and in delivering energy to a site, including, but not limited to, power generation, transmission and distribution losses.

TITLE 24 is all of the building standards and associated administrative regulations published in Title 24 of the California Code of Regulations. The Building Energy Efficiency Standards are contained in Part 6. Part 1 contains the administrative regulations for the building standards.

TOTAL HEAT OF REJECTION (THR) is the heat absorbed at the evaporator plus the heat picked up in the suction line plus the heat added to the refrigerant in the compressor.

TOWNHOUSE is a single-family dwelling unit constructed in a group of three or more attached units in which each unit extends from the foundation to roof and with open space on at least two sides.

TRANSFER AIR is air transferred, whether actively by fans or passively by pressure differentials, from one room to another within a building through openings in the room envelope.

TRIM COMPRESSOR is a compressor that is designated for part-load operation, handling the short term variable trim load of end uses, in addition to the fully loaded base compressors.

U-FACTOR, CENTER OF GLAZING (Uc) is the U-factor for the center of glazing area

U-FACTOR, is the overall coefficient of thermal transmittance of a fenestration, wall, floor, roof or ceiling component, in Btu/(hr. x ft.^{2} x °F), including air film resistance at both surfaces.

U-FACTOR, TOTAL FENESTRATION PRODUCT (Ut) is the U-factor for the total fenestration product.

UIMC See Unit Interior Mass Capacity.

UL is the Underwriters Laboratories.

UL 1574 is the Underwriters Laboratories document titled "Track Lighting Systems.," 2000.

UL 1598 is the Underwriters Laboratories document titled "Standard for Luminaires," 2000.

UL 181 is the Underwriters Laboratories document titled "Standard for Factory-Made Air Ducts and Air Connectors," 1996.

UL 181A is the Underwriters Laboratories document titled "Standard for Closure Systems for Use With Rigid Air Ducts and Air Connectors," 1994.

UL 181B is the Underwriters Laboratories document titled "Standard for Closure Systems for Use With Flexible Air Ducts and Air Connectors," 1995.

UL 723 is the Underwriters Laboratories document titled "Standard for Test for Surface Burning Characteristics of Building Materials," 1996.

UL 727 is the Underwriters Laboratories document titled "Standard for Oil-Fired Central Furnaces," 2006.

UL 731 is the Underwriters Laboratories document titled "Standard for Oil-Fired Unit Heaters," 2006 with revisions 1 through 7.

UL 2108 is the Underwriters Laboratories document titled "Low Voltage Lighting Systems," 2008.

UL DATA ACCEPTANCE PROGRAM (DAP) is an Underwriters Laboratory program that utilizes work conducted by a client as well as third-party test facilities in accordance with national and international accreditation criteria to facilitate the conduct of investigations of products. Among the types UL uses are Witnessed Test Data Program (WTDP) where UL witnesses the tests being conducted, Client Test Data Program (CTDP) which is where the client conducts the test and submits the data for UL review, and Third Party Test Data Program (TPTDP) where testing is conducted by another testing organization for clients and submitted to UL for review.

UL® is the Underwriters Laboratories.

UNCONDITIONED SPACE is enclosed space within a building that is not directly conditioned, or indirectly conditioned.

UNIT INTERIOR MASS CAPACITY (UIMC) is the amount of effective heat capacity per unit of thermal mass, taking into account the type of mass material, thickness, specific heat, density and surface area.

U-VALUE See U-factor.

VAPOR RETARDER CLASS is a measure of the ability of a material or assembly to limit the amount of moisture that passes through the material or assembly. Vapor retarder class shall be defined using the desiccant method with Procedure A of ASTM E96 as follows:

Class I: 0.1 perm or less

Class II: 0.1 < perm < 1.0 perm

Class III: 1.0 < perm < 10 perm (see Stds.)

VARIABLE AIR VOLUME (VAV) SYSTEM is a space-conditioning system that maintains comfort levels by varying the volume of supply air to the zones served.

VENDING MACHINE is a machine for vending and dispensing refrigerated or non-refrigerated food and beverages or general merchandise.

VENTILATION AIR is that portion of supply air which comes from outside plus any recirculated air that has been treated to maintain the desired quality of air within a designated space. See also Outside Air.

VERTICAL GLAZING See Window.

VINYL WINDOW FRAME is a fenestration frame constructed with a polyvinyl chloride (PVC) which has a lower conductivity than metal and a similar conductivity to wood.

WALL TYPE is a type of wall assembly having a specific heat capacity, framing type, and U-factor.

WATER BALANCE IN EVAPORATIVE COOLING TOWERS The water balance of a cooling tower is:

$M = E + B$, where:

M = makeup water (from the mains water supply)

E = losses due to evaporation

B = losses due to blowdown

WEATHERSTRIPPING is a specially designed strip, seal or gasket attached to doors and windows to prevent infiltration and exfiltration through cracks around the openings. Weatherstripping is one of the mandatory requirements for all new residential construction. See Infiltration, Exfiltration.

WEIGHTED AVERAGING is an arithmetic technique for determining an average of differing values for the members of a set by weighting each value by the extent to which the value occurs. In some cases when two or more types of a building feature, material or construction assembly occur in a building, a weighted average of the different types may be sufficiently accurate to represent the energy impact of each type considered separately.

WEST-FACING See Orientation.

WINDOW TYPE is a window assembly having a specific solar heat gain coefficient, relative solar heat gain, and U-factor.

WOOD HEATER is an enclosed wood-burning appliance used for space heating and/or domestic water heating.

WOOD STOVE See Wood Heater.

ZONAL CONTROL is the practice of dividing a residence into separately controlled HVAC zones. This may be done by installing multiple HVAC systems that condition a specific part of the building, or by installing one HVAC system with a specially designed distribution system that permits zonal control. The Energy Commission has approved an alternative calculation method for analyzing the energy impact of zonally controlled space heating and cooling systems. To qualify for compliance credit for zonal control, specific eligibility criteria specified in the Residential ACM Manual must be met.

ZONE, CRITICAL is a zone serving a process where reset of the zone temperature setpoint during a demand shed event might disrupt the process, including but not limited to data centers, telecom and private branch exchange (PBX) rooms, and laboratories.

ZONE, NON-CRITICAL is a zone that is not a critical zone.

ZONE, SPACE-CONDITIONING is a space or group of spaces within a building with sufficiently similar comfort conditioning requirements so that comfort conditions, as specified in §140.4(b)3 or §150.0(h), as applicable, can be maintained throughout the zone by a single controlling device.

Joint Appendix JA2

Appendix JA2 – Reference Weather/Climate Data

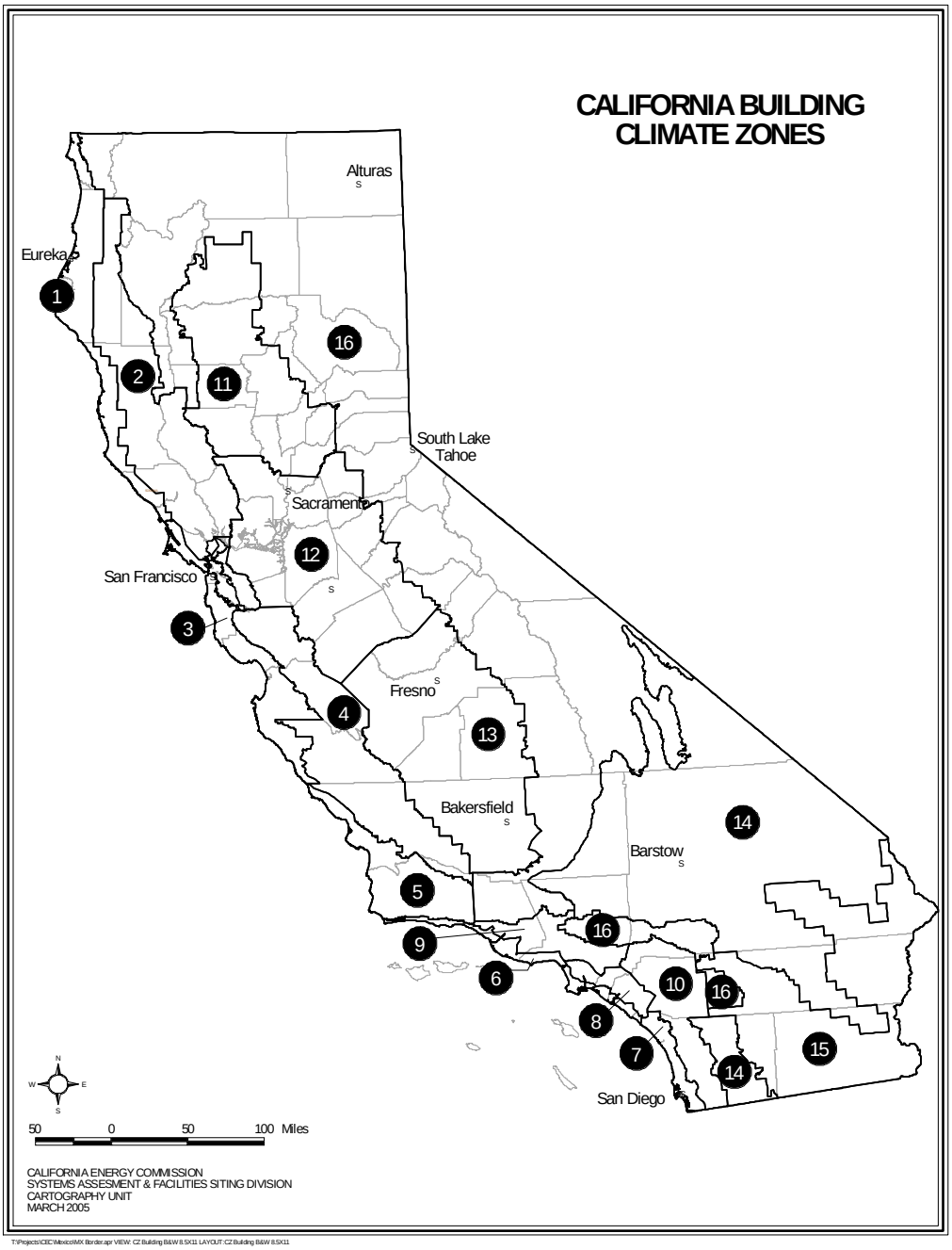

Figure2-1 – Climate Zone Map

JA2.1 Weather Data - General

All energy calculations used for compliance with the Standards must use the Commission's sixteen (16) official hourly weather files or modifications of these files adapted for the design day conditions in Table 2-3. The modified weather files make the HVAC sizing and energy calculations more realistic for energy compliance simulations. These files are available in electronic form from the Commission in CSV (Comma Delimited File) format, TMY2 (Typical Meteorological Year) format and EPW (EnergyPlus) format.

Each weather file contains data on a variety of ambient conditions such as:

(a) Dry bulb temperature

(b) Wet bulb temperature

(c) Wind speed and direction

(d) Direct solar radiation

(e) Diffuse radiation

Table 2-1 –California Standard Climate Zone Summary

Note: The alternative weather files modified for local design conditions use the specific latitude, longitude and elevation of the selected city.

Climate Zone	City	Latitude	Longitude	Elevation (ft)
1	Arcata	41.0	124.1	203
2	Santa Rosa	38.5	122.8	125
3	Oakland	37.7	122.2	6
4	San Jose-Reid	37.3	121.8	135
5	Santa Maria	34.9	120.4	253
6	Torrance	33.8	118.3	88
7	San Diego-Lindbergh	32.7	117.2	13
8	Fullerton	33.9	118.0	95
9	Burbank-Glendale	34.2	118.3	741
10	Riverside	33.9	117.4	840
11	Red Bluff	40.1	122.2	348
12	Sacramento	38.5	121.5	16
13	Fresno	36.8	119.7	335
14	Palmdale	34.6	118.0	2523
15	Palm Springs-Intl	33.8	116.5	475
16	Blue Canyon	39.2	120.7	5279

JA2.1.1 Counties and Cities with Climate Zone Designations

The following pages are a listing of California cities, ZIP codes, and counties with a climate zone designation for each. This information represents an abridged version of the Commission publication *California Climate Zone Descriptions* which contains detailed survey definitions of the 16 climate zones.

Table 2-2 – Counties and Cities with Climate Zone Designations

CITY	ZIP CODE	COUNTY	CZ
A			
Acampo	95220	San Joaquin	12
Acton	93510	Los Angeles	14
Adelanto	92301	San Bernardino	14
Adin	96006	Modoc	16
Agoura	91301	Los Angeles	9
Agoura	91301	Ventura	9
Aguanga	92536	Riverside	15
Ahwahnee	93601	Madera	13
Ahwahnee	93601	Mariposa	13
Alameda	94501	Alameda	3
Alameda	94502	Alameda	3
Alamo	94507	Contra Costa	12
Albany	94706	Alameda	3
Alderpoint	95511	Humboldt	2
Alhambra	91801	Los Angeles	9
Alhambra	91803	Los Angeles	9
Aliso Viejo	92656	Orange	6
CITY	**ZIP CODE**	**COUNTY**	**CZ**
Alleghany	95910	Sierra	16
Alpine	91901	San Diego	10
Alta	95701	Placer	16
Altadena	91001	Los Angeles	16
Alturus	96101	Modoc	16
Amboy	92304	San Bernardino	15
American Canyon	94503	Napa	2

American Canyon	94503	Solano	2
Anaheim	92801	Orange	8
Anaheim	92802	Orange	8
Anaheim	92804	Orange	8
Anaheim	92805	Orange	8
Anaheim	92806	Orange	8
Anaheim	92807	Orange	8
Anaheim	92808	Orange	8
Anderson	96007	Shasta	11
Anderson	96007	Tehama	11
Angels Camp	95222	Calaveras	12
Angels Camp	95222	Tuolumne	12
Angelus Oaks	92305	San Bernardino	15
CITY	**ZIP CODE**	**COUNTY**	**CZ**
Angwin	94508	Napa	2
Annapolis	95412	Sonoma	1
Antioch	94509	Contra Costa	12
Antioch	94531	Contra Costa	12
Anza	92539	Riverside	16
Apple Valley	92307	San Bernardino	14
Apple Valley	92308	San Bernardino	14
Applegate	95703	Placer	11
Aptos	95003	Santa Cruz	3
Arcadia	91006	Los Angeles	9
Arcadia	91007	Los Angeles	9
Arcata	95521	Humboldt	1
Aretsia	90701	Los Angeles	8
Armona	93202	Kings	13
Arnold	95223	Alpine	16
Arnold	95223	Calaveras	16
Aromas	95004	Monterey	4
Aromas	95004	San Benito	4
Arroyo Grande	93420	San Luis Obispo	5
Arvin	93203	Kern	13
Atascadero	93422	San Luis Obispo	4
Atherton	94027	San Mateo	3
Atwater	95301	Merced	12
Auberry	93602	Fresno	16
Auberry	93602	Madera	16
Auburn	95602	Nevada	11
Auburn	95602	Placer	11
Auburn	95603	Placer	11
Avenal	93204	Kings	13
Azusa	91702	Los Angeles	9

B

Bakersfield	93301	Kern	13
Bakersfield	93304	Kern	13
Bakersfield	93305	Kern	13
Bakersfield	93306	Kern	13
Bakersfield	93307	Kern	13
Bakersfield	93308	Kern	13
Bakersfield	93309	Kern	13
Bakersfield	93311	Kern	13
Bakersfield	93312	Kern	13
Bakersfield	93313	Kern	13
Bakersfield	93314	Kern	13
Balboa	92662	Orange	6
Baldwin Park	91706	Los Angeles	9
Ballico	95303	Merced	12
Bangor	95914	Butte	11
Bangor	95914	Yuba	11
Banning	92220	Riverside	15
Barstow	92311	San Bernardino	14
Bass Lake	93604	Madera	16
Bayside	95524	Humboldt	1
CITY	**ZIP CODE**	**COUNTY**	**CZ**
Beale AFB	95903	Yuba	11
Beaumont	92223	Riverside	10
Belden	95915	Plumas	16
Bell	90201	Los Angeles	8
Bella Vista	96008	Shasta	11
Bellflower	90706	Los Angeles	8
Belmont	94002	San Mateo	3

Belvedere Tiburon	94920	Marin	3
Ben Lomond	95005	Santa Cruz	3
Benicia	94510	Solano	12
Berkeley	94702	Alameda	3
Berkeley	94703	Alameda	3
Berkeley	94704	Alameda	3
Berkeley	94705	Alameda	3
Berkeley	94707	Alameda	3
Berkeley	94707	Contra Costa	3
Berkeley	94708	Alameda	3
Berkeley	94708	Contra Costa	3
Berkeley	94709	Alameda	3
Berkeley	94710	Alameda	3
Berkeley	94720	Alameda	3
Berry Creek	95916	Butte	16
Beverly Hills	90210	Los Angeles	9
Beverly Hills	90211	Los Angeles	9
Beverly Hills	90212	Los Angeles	9
Big Bar	96010	Trinity	16
Big Bear City	92314	San Bernardino	16
Big Bear Lake	92315	San Bernardino	16
Big Pine	93513	Inyo	16
Big River	92242	San Bernardino	15
Big Sur	93920	Monterey	3
Biggs	95917	Butte	11
Birds Landing	94512	Solano	12
Bishop	93512	Mono	16
Bishop	93514	Inyo	16
Bishop	93514	Mono	16
Blairsden	96103	Plumas	16
Blocksburg	95514	Humboldt	2
Bloomington	92316	San Bernardino	10
Blue Jay	92317	San Bernardino	16
Blue Lake	95525	Humboldt	1
Blythe	92225	Riverside	15
Bodega	94922	Sonoma	1
Bodega Bay	94923	Sonoma	1
Bodfish	93205	Kern	16
Bolinas	94924	Marin	3
Bonita	91902	San Diego	7
Bonsall	92003	San Diego	10
Boonville	95415	Mendocino	2
Boron	93516	Kern	14
Borrego Springs	92004	San Diego	15
Boulder Creek	95006	San Mateo	3

CITY	ZIP CODE	COUNTY	CZ
Boulder Creek	95006	Santa Cruz	3
Boulevard	91905	San Diego	14
Bradley	93426	Monterey	4
Bradley	93426	San Luis Obispo	4
Branscomb	95417	Mendocino	1
Brawley	92227	Imperial	15
Brea	92821	Orange	8
Brea	92823	Orange	8
Brentwood	94513	Contra Costa	12
Bridgeport	93517	Mono	16
Bridgeville	95526	Humboldt	2
Bridgeville	95526	Trinity	2
Brisbane	94005	San Mateo	3
Brooks	95606	Yolo	12
Browns Valley	95918	Yuba	11
Brownsville	95919	Yuba	11
Buellton	93427	Santa Barbara	5
Buena Park	90620	Orange	8
Buena Park	90621	Orange	8
Burbank	91501	Los Angeles	9
Burbank	91502	Los Angeles	9
Burbank	91504	Los Angeles	9
Burbank	91505	Los Angeles	9
Burbank	91506	Los Angeles	9
Burbank	91521	Los Angeles	9
Burbank	91522	Los Angeles	9
Burbank	91523	Los Angeles	9
Burlingame	94010	San Mateo	3
Burney	96013	Shasta	16

Burney	96013	Siskiyou	16
Burnt Ranch	95527	Trinity	16
Butte City	95920	Glenn	11
Buttonwillow	93206	Kern	13
Byron	94514	Alameda	12
Byron	94514	Contra Costa	12

C

Cabazon	92230	Riverside	15
Calexico	92231	Imperial	15
Caliente	93518	Kern	16
California City	93505	Kern	14
California City	93505	San Bernardino	14
California Hot Springs	93207	Tulare	13
Calimesa	92320	Riverside	10
Calipatria	92233	Imperial	15
Calistoga	94515	Napa	2
Calistoga	94515	Sonoma	2
Callahan	96014	Siskiyou	16
Callahan	96014	Trinity	16
Calpine	96124	Sierra	16
Camarillo	93010	Ventura	6

CITY	ZIP CODE	COUNTY	CZ
Camarillo	93012	Ventura	6
Cambria	93428	San Luis Obispo	5
Camino	95709	El Dorado	12
Camp Pendelton North	92055	San Diego	7
Campbell	95008	Santa Clara	4
Campo	91906	San Diego	14
Camptonville	95922	Sierra	16
Camptonville	95922	Yuba	16
Canby	96015	Modoc	16
Cantua Creek	93608	Fresno	13
Canyon Country	91351	Los Angeles	9
Canyon Country	91387	Los Angeles	9
Canyon Country	91390	Los Angeles	16
Canyondam	95923	Plumas	16
Capay	95607	Yolo	12
Capistrano Beach	92624	Orange	6
Capitola	95010	Santa Cruz	3
Cardiff by the Sea	92007	San Diego	7
Carlotta	95528	Humboldt	1
Carlsbad	92008	San Diego	7
Carlsbad	92009	San Diego	7
Carlsbad	92010	San Diego	7
Carlsbad	92011	San Diego	7
Carmel	93923	Monterey	3
Carmel Valley	93924	Monterey	3
Carmichael	95608	Sacramento	12
Carnelian Bay	96140	Placer	16
Carpinteria	93013	Santa Barbara	6
Carpinteria	93013	Ventura	6
Carson	90745	Los Angeles	6
Carson	90746	Los Angeles	8
Carson	90747	Los Angeles	8
Caruthers	93609	Fresno	13
Casmalia	93429	Santa Barbara	5
Caspar	95420	Mendocino	1
Cassel	96016	Shasta	16
Castaic	91384	Los Angeles	9
Castro Valley	94546	Alameda	3
Castro Valley	94552	Alameda	3
Castroville	95012	Monterey	3
Cathedral City	92234	Riverside	15
Catheys Valley	95306	Mariposa	12
Cayucos	93430	San Luis Obispo	5
Cazadero	95421	Sonoma	1
Cedar Glen	92321	San Bernardino	16
Cedarpines Park	92322	San Bernardino	16
Cedarville	96104	Modoc	16
Ceres	95307	Stanislaus	12
Cerritos	90703	Los Angeles	8
Challenge	95925	Yuba	16

Chatsworth	91311	Los Angeles	9
Chatsworth	91311	Ventura	9
CITY	**ZIP CODE**	**COUNTY**	**CZ**
Chester	96020	Plumas	16
Chico	95926	Butte	11
Chico	95928	Butte	11
Chico	95928	Glenn	11
Chico	95973	Butte	11
Chico	95973	Tehama	11
Chilcoot	96105	Plumas	16
Chinese Camp	95309	Tuolumne	12
Chino	91708	San Bernardino	10
Chino	91710	Los Angeles	10
Chino	91710	San Bernardino	10
Chino Hills	91709	San Bernardino	10
Chowchilla	93610	Madera	13
Chowchilla	93610	Merced	13
Chualar	93925	Monterey	3
Chula Vista	91910	San Diego	7
Chula Vista	91911	San Diego	7
Chula Vista	91913	San Diego	7
Chula Vista	91914	San Diego	10
Chula Vista	91915	San Diego	7
Chula Vista	91932	San Diego	7
Cilo	96106	Plumas	16
Citrus Heights	95610	Sacramento	12
Citrus Heights	95621	Sacramento	12
Claremont	91711	Los Angeles	9
Clarksburg	95612	Yolo	12
Clayton	94517	Contra Costa	12
Clearlake	95422	Lake	2
Clearlake Oaks	95423	Colusa	2
Clearlake Oaks	95423	Lake	2
Cloverdale	95425	Sonoma	2
Clovis	93611	Fresno	13
Clovis	93612	Fresno	13
Clovis	93619	Fresno	13
Coachella	92236	Riverside	15

Coalinga	93210	Fresno	13
Coarsegold	93614	Madera	13
Coleville	96107	Mono	16
Colfax	95713	Placer	11
College City	95912	Colusa	11
Colton	92324	Riverside	10
Colton	92324	San Bernardino	10
Columbia	95310	Tuolumne	12
Colusa	95932	Colusa	11
Comptche	95427	Mendocino	1
Compton	90220	Los Angeles	8
Compton	90221	Los Angeles	8
Compton	90222	Los Angeles	8
Concord	94518	Contra Costa	12
Concord	94519	Contra Costa	12
Concord	94520	Contra Costa	12
Concord	94521	Contra Costa	12
CITY	**ZIP CODE**	**COUNTY**	**CZ**
Cool	95614	El Dorado	12
Cool	95614	Placer	12
Cooperopolis	95228	Calaveras	12
Cooperopolis	95228	Tuolumne	12
Corcoran	93212	Kings	13
Corcoran	93212	Tulare	13
Corning	96021	Tehama	11
Corona	92879	Riverside	10
Corona	92880	Riverside	10
Corona	92880	San Bernardino	10
Corona	92881	Riverside	10
Corona	92882	Riverside	10
Corona	92883	Riverside	10
Corona dl Mar	92625	Orange	6
Coronado	92118	San Diego	7
Corte Madera	94925	Marin	3
Costa Mesa	92626	Orange	6
Costa Mesa	92627	Orange	6
Cotati	94931	Sonoma	2
Coto De Caza	92679	Orange	8

Cottonwood	96022	Shasta	11
Cottonwood	96022	Tehama	11
Coulterville	95311	Mariposa	12
Coulterville	95311	Tuolumne	12
Courtland	95615	Sacramento	12
Courtland	95615	Yolo	12
Covelo	95428	Mendocino	2
Covelo	95428	Tehama	2
Covina	91722	Los Angeles	9
Covina	91723	Los Angeles	9
Covina	91724	Los Angeles	9
Crescent City	95531	Del Norte	1
Crescent Mills	95934	Plumas	16
Crestline	92325	San Bernardino	16
Creston	93432	San Luis Obispo	4
Crockett	94525	Contra Costa	12
Crows Landing	95313	Stanislaus	12
Culver City	90230	Los Angeles	8
Culver City	90232	Los Angeles	8
Cupertino	95014	Santa Clara	4
Cutler	93615	Tulare	13
Cypress	90630	Orange	8

D

Daggett	92327	San Bernardino	14
Daly City	94014	San Francisco	3
Daly City	94014	San Mateo	3
Daly City	94015	San Francisco	3
Daly City	94015	San Mateo	3
Dan Point	92629	Orange	6
Danville	94506	Contra Costa	12
Danville	94526	Contra Costa	12
CITY	**ZIP CODE**	**COUNTY**	**CZ**
Davenport	95017	Santa Cruz	3
Davis	95616	Solano	12
Davis	95616	Yolo	12
Davis	95618	Solano	12
Davis	95618	Yolo	12
Davis Creek	96108	Modoc	16
Death Valley	92328	Inyo	14
Deer Park	94576	Napa	2
Del Mar	92014	San Diego	7
Del Rey	93616	Fresno	13
Delano	93215	Kern	13
Delano	93215	Tulare	13
Delhi	95315	Merced	12
Denair	95316	Merced	12
Denair	95316	Stanislaus	12
Descanso	91916	San Diego	14
Desert Hot Springs	92240	Riverside	15
Desert Hot Springs	92241	Riverside	15
Diablo	94528	Contra Costa	12
Diamond Bar	91765	Los Angeles	9
Diamond Springs	95619	El Dorado	12
Dillon Beach	94929	Marin	3
Dinuba	93618	Fresno	13
Dinuba	93618	Tulare	13
Discovery Bay	94505	Contra Costa	12
Dixon	95620	Solano	12
Dixon	95620	Yolo	12
Dobbins	95935	Yuba	11
Dorris	96023	Siskiyou	16
Dos Palos	93620	Fresno	12
Dos Palos	93620	Madera	12
Dos Palos	93620	Merced	12
Dos Rios	95429	Mendocino	2
Douglas City	96024	Trinity	16
Downey	90240	Los Angeles	8
Downey	90241	Los Angeles	8
Downey	90242	Los Angeles	8
Downieville	95936	Sierra	16
Doyle	96109	Lassen	16

Duarte	91008	Los Angeles	16
Duarte	91010	Los Angeles	9
Dublin	94568	Alameda	12
Dublin	94568	Contra Costa	12
Dulzura	91917	San Diego	10
Dunlap	93621	Fresno	13
Dunnigan	95937	Yolo	12
Dunsmuir	96025	Shasta	16
Dunsmuir	96025	Siskiyou	16
Durham	95938	Butte	11
Dutch Flat	95714	Placer	16

CITY	ZIP CODE	COUNTY	CZ
E			
Eagle Mountain	92239	Riverside	15
Earlimart	93219	Tulare	13
Echo Lake	95721	El Dorado	16
Edwards AFB	93524	Kern	14
Edwards AFB	93524	San Bernardino	14
El Cajon	92019	San Diego	10
El Cajon	92020	San Diego	7
El Cajon	92021	San Diego	10
El Centro	92243	Imperial	15
El Cerrito	94530	Contra Costa	3
El Dorado	95623	El Dorado	12
El Dorado Hills	95762	El Dorado	12
El Dorado Hills	95762	Sacramento	12
El Monte	91731	Los Angeles	9
El Monte	91732	Los Angeles	9
El Nido	95317	Merced	12
El Portal	95318	Mariposa	16
El Segundo	90245	Los Angeles	6
El Sobrante	94803	Contra Costa	3
El Toro	92630	Orange	8
Elk	95432	Mendocino	1
Elk Creek	95939	Glenn	11
Elk Grove	95624	Sacramento	12
Elk Grove	95757	Sacramento	12
Elk Grove	95758	Sacramento	12
Elverta	95626	Placer	12
Elverta	95626	Sacramento	12
Elverta	95626	Sutter	12
Emeryville	94608	Alameda	3
Emigrant Gap	95715	Placer	16
Encinitas	92024	San Diego	7
Escalon	95320	San Joaquin	12
Escondido	92025	San Diego	10
Escondido	92026	San Diego	10
Escondido	92027	San Diego	10
Escondido	92029	San Diego	10
Esparto	95627	Yolo	12
Essex	92332	San Bernardino	14
Etna	96027	Siskiyou	16
Eureka	95501	Humboldt	1
Eureka	95503	Humboldt	1
Exeter	93221	Tulare	13
F			
Fair Oaks	95628	Sacramento	12
Fairfax	94930	Marin	2
Fairfield	94533	Solano	12
Fairfield	94534	Solano	12
Fairfield	94535	Solano	12
CITY	**ZIP CODE**	**COUNTY**	**CZ**
Fall River Mills	96028	Shasta	16
Fallbrook	92028	Riverside	10
Fallbrook	92028	San Diego	10
Farmersville	93223	Tulare	13
Farmington	95230	Calaveras	12
Farmington	95230	San Joaquin	12
Farmington	95230	Stanislaus	12
Fellows	93224	Kern	13

Felton	95018	Santa Cruz	3
Ferndale	95536	Humboldt	1
Fiddletown	95629	Amador	12
Fiddletown	95629	El Dorado	12
Fillmore	93015	Ventura	9
Firebaugh	93622	Fresno	13
Firebaugh	93622	Madera	13
Firebaugh	93622	Merced	13
Fish Camp	93623	Mariposa	16
Floriston	96111	Nevada	16
Folsom	95630	Sacramento	12
Fontana	92335	San Bernardino	10
Fontana	92336	San Bernardino	10
Fontana	92337	San Bernardino	10
Foothill Ranch	92610	Orange	8
Forbestown	95941	Butte	11
Forbestown	95941	Yuba	11
Forest Falls	92339	San Bernardino	16
Forest Ranch	95942	Butte	16
Forest Ranch	95942	Tehama	16
Foresthill	95631	Placer	16
Forestville	95436	Sonoma	2
Forks of Salmon	96031	Siskiyou	16
Forks of Salmon	96031	Trinity	16
Fort Bidwell	96112	Modoc	16
Fort Bragg	95437	Mendocino	1
Fort Irwin	92310	San Bernardino	14
Fort Jones	96032	Siskiyou	16
Fortuna	95540	Humboldt	1
Fountain Valley	92708	Orange	6
Fowler	93625	Fresno	13
Frazier Park	93225	Kern	16
Frazier Park	93225	Ventura	16
Freedom	95019	Santa Cruz	3
Fremont	94536	Alameda	3
Fremont	94538	Alameda	3
Fremont	94539	Alameda	3
Fremont	94539	Santa Clara	3
Fremont	94555	Alameda	3
French Camp	95231	San Joaquin	12
French Gulch	96033	Shasta	11
Fresno	93650	Fresno	13
Fresno	93701	Fresno	13
Fresno	93702	Fresno	13
CITY	**ZIP CODE**	**COUNTY**	**CZ**
Fresno	93703	Fresno	13
Fresno	93704	Fresno	13
Fresno	93705	Fresno	13
Fresno	93706	Fresno	13
Fresno	93710	Fresno	13
Fresno	93711	Fresno	13
Fresno	93720	Fresno	13
Fresno	93720	Madera	13
Fresno	93721	Fresno	13
Fresno	93722	Fresno	13
Fresno	93723	Fresno	13
Fresno	93725	Fresno	13
Fresno	93726	Fresno	13
Fresno	93727	Fresno	13
Fresno	93728	Fresno	13
Fresno	93730	Fresno	13
Fresno	93730	Madera	13
Fresno	93741	Fresno	13
Friant	93626	Fresno	13
Friant	93626	Madera	13
Fullerton	92831	Orange	8
Fullerton	92832	Orange	8
Fullerton	92833	Orange	8
Fullerton	92835	Orange	8

G

Galt	95632	Sacramento	12
Galt	95632	San Joaquin	12
Garberville	95542	Humboldt	2

Garberville	95542	Trinity	2
Garberville	95554	Humboldt	2
Garden Grove	92840	Orange	8
Garden Grove	92841	Orange	8
Garden Grove	92843	Orange	8
Garden Grove	92844	Orange	8
Garden Grove	92845	Orange	8
Garden Valley	95633	El Dorado	12
Gardena	90247	Los Angeles	8
Gardena	90248	Los Angeles	8
Gardena	90249	Los Angeles	8
Gasquet	95543	Del Norte	16
Gazelle	96034	Siskiyou	16
Georgetown	95634	El Dorado	12
Gerber	96035	Tehama	11
Geyserville	95441	Sonoma	2
Gilroy	95020	Santa Clara	4
Glen Ellen	95442	Sonoma	2
Glencoe	95232	Calaveras	12
Glendale	91201	Los Angeles	9
Glendale	91202	Los Angeles	9
Glendale	91203	Los Angeles	9
Glendale	91204	Los Angeles	9
CITY	**ZIP CODE**	**COUNTY**	**CZ**
Glendale	91205	Los Angeles	9
Glendale	91206	Los Angeles	9
Glendale	91207	Los Angeles	9
Glendale	91208	Los Angeles	9
Glendora	91740	Los Angeles	9
Glendora	91741	Los Angeles	9
Glenn	95943	Butte	11
Glenn	95943	Glenn	11
Glennville	93226	Kern	16
Gold Run	95717	Placer	16
Goleta	93117	Santa Barbara	6
Gonzales	93926	Monterey	3
Goodyears Bar	95944	Sierra	16
Grand Terrace	92313	San Bernardino	10
Granite Bay	95746	Placer	11
Grass Valley	95945	Nevada	11
Grass Valley	95949	Nevada	11
Graton	95444	Sonoma	2
Greenfield	93927	Monterey	4
Greenville	95947	Plumas	16
Greenwood	95635	El Dorado	12
Grenada	96038	Siskiyou	16
Gridley	95948	Butte	11
Gridley	95948	Sutter	11
Grizzly Flats	95636	El Dorado	16
Groveland	95321	Mariposa	16
Groveland	95321	Tuolumne	16
Grover Beach	93433	San Luis Obispo	5
Guadalupe	93434	Santa Barbara	5
Gualala	95445	Mendocino	1
Guerneville	95446	Sonoma	2
Guinda	95637	Yolo	12
Gustin	95322	Merced	12
Gustin	95322	Stanislaus	12

H

Hacienda Heights	91745	Los Angeles	9
Half Moon Bay	94019	San Mateo	3
Hamilton	95951	Glenn	11
Hanford	93230	Kings	13
Happy Camp	96039	Siskiyou	16
Harbor City	90710	Los Angeles	6
Hat Creek	96040	Shasta	16
Hawaiian Gardens	90716	Los Angeles	8
Hawthorne	90250	Los Angeles	8
Hayford	96041	Trinity	16
Hayward	94541	Alameda	3
Hayward	94542	Alameda	3
Hayward	94544	Alameda	3
Hayward	94545	Alameda	3

Healdsberg	95448	Sonoma	2

CITY	ZIP CODE	COUNTY	CZ
Heber	92249	Imperial	15
Helendale	92342	San Bernardino	14
Helm	93627	Fresno	13
Hemet	92543	Riverside	10
Hemet	92544	Riverside	10
Hemet	92545	Riverside	10
Herald	95638	Sacramento	12
Hercules	94547	Contra Costa	3
Herlong	96113	Lassen	16
Hermosa Beach	90254	Los Angeles	6
Hesperia	92344	San Bernardino	14
Hesperia	92345	San Bernardino	14
Hickman	95323	Stanislaus	12
Hidden Hills	91302	Los Angeles	9
Hidden Valley Lake	95467	Lake	2
Highland	92346	San Bernardino	10
Hilmar	95324	Merced	12
Hinley	92347	San Bernardino	14
Hollister	95023	San Benito	4
Hollister	95023	Santa Clara	4
Holtville	92250	Imperial	15
Homeland	92548	Riverside	10
Homewood	96141	Placer	16
Hoopa	95546	Humboldt	2
Hopland	95449	Mendocino	2
Hornbrook	96044	Siskiyou	16
Hornitos	95325	Mariposa	12
Hughson	95326	Stanislaus	12
Huntington Beach	92646	Orange	6
Huntington Beach	92647	Orange	6
Huntington Beach	92648	Orange	6
Huntington Beach	92649	Orange	6
Huntington Park	90255	Los Angeles	8
Huron	93234	Fresno	13
Hyampom	96046	Humboldt	16
Hyampom	96046	Trinity	16
Hydesville	95547	Humboldt	1

I

Idyllwild	92549	Riverside	16
Igo	96047	Shasta	11
Imperial	92251	Imperial	15
Independence	93526	Inyo	16
Indian Wells	92210	Riverside	15
Indio	92201	Riverside	15
Indio	92203	Riverside	15
Inglewood	90301	Los Angeles	8
Inglewood	90302	Los Angeles	8
Inglewood	90303	Los Angeles	8
Inglewood	90304	Los Angeles	8
Inglewood	90305	Los Angeles	8

CITY	ZIP CODE	COUNTY	CZ
Inverness	94937	Marin	3
Inyokern	93527	Inyo	16
Inyokern	93527	Kern	16
Ione	95640	Amador	12
Irvine	92602	Orange	8
Irvine	92603	Orange	8
Irvine	92604	Orange	8
Irvine	92606	Orange	8
Irvine	92612	Orange	8
Irvine	92614	Orange	8
Irvine	92617	Orange	8
Irvine	92618	Orange	8
Irvine	92620	Orange	8
Irvine	92697	Orange	8
Isleton	95641	Sacramento	12
Ivanhoe	93235	Tulare	13

J

	95642	Amador	12

Jackson			
Jacumba	91934	San Diego	14
Jamestown	95327	Tuolumne	12
Jamul	91935	San Diego	10
Janesville	96114	Lassen	16
Janesville	96114	Plumas	16
Jenner	95450	Sonoma	1
Johannesburg	93528	Kern	14
Johnson Valley	92285	San Bernardino	14
Joshua Tree	92252	San Bernardino	14
Julian	92036	San Diego	15
Junction City	96048	Trinity	16
June Lake	93529	Mono	16

K

Keene	93531	Kern	16
Kelseyville	95451	Lake	2
Kelso	92309	San Bernardino	14
Kentfield	94904	Marin	2
Kenwood	95452	Sonoma	2
Kerman	93630	Fresno	13
Kernville	93238	Kern	16
Kettleman City	93239	Kings	13
King City	93930	Monterey	4
Kings Beach	96143	Placer	16
Kings Canyon National Park	93633	Fresno	16
Kingsburg	93631	Fresno	13
Kingsburg	93631	Kings	13
Kingsburg	93631	Tulare	13
Klamath	95548	Del Norte	1
Klamath River	96050	Siskiyou	16
Kneeland	95549	Humboldt	2
CITY	**ZIP CODE**	**COUNTY**	**CZ**
Knights Landing	95645	Sutter	11
Knights Landing	95645	Yolo	11
Knightsen	94548	Contra Costa	12
Korbel	95550	Humboldt	2
Kyburz	95720	El Dorado	16

L

La Canada Flintridge	91011	Los Angeles	16
La Grange	95329	Mariposa	12
La Grange	95329	Stanislaus	12
La Grange	95329	Tuolumne	12
La Habra	90631	Los Angeles	8
La Habra	90631	Orange	8
La Honda	94020	San Mateo	3
La Honda	94020	Santa Clara	3
La Mesa	91941	San Diego	10
La Mesa	91942	San Diego	10
La Mirada	90638	Los Angeles	9
La Mirada	90639	Los Angeles	9
La Palma	90623	Orange	8
La Porte	95981	Plumas	16
La Porte	95981	Yuba	16
La Puente	91744	Los Angeles	9
La Puente	91746	Los Angeles	9
La Quinta	92253	Riverside	15
La Verne	91750	Los Angeles	9
Lafayette	94549	Contra Costa	12
Laguna Beach	92651	Orange	6
Laguna Hills	92653	Orange	8
Laguna Niguel	92677	Orange	6
Laguna Woods	92637	Orange	8
Lagunitas	94938	Marin	3
Lagunitas-Forest Knolls	94933	Marin	3
Lake Arrowhead	92352	San Bernardino	16
Lake City	96115	Modoc	16
Lake Elsinore	92530	Orange	10
Lake Elsinore	92530	Riverside	10
Lake Elsinore	92532	Riverside	10

Lake Hughes	93532	Los Angeles	14
Lake Isabella	93240	Kern	16
Lake View Ter	91342	Los Angeles	9
Lakehead	96051	Shasta	11
Lakeport	95453	Lake	2
Lakeside	92040	San Diego	10
Lakewood	90712	Los Angeles	8
Lakewood	90713	Los Angeles	8
Lakewood	90715	Los Angeles	8
Lamont	93241	Kern	13
Lancaster	93534	Los Angeles	14
Lancaster	93535	Los Angeles	14
CITY	**ZIP CODE**	**COUNTY**	**CZ**
Lancaster	93536	Kern	14
Lancaster	93536	Los Angeles	14
Larkspur	94939	Marin	3
Lathrop	95330	San Joaquin	12
Laton	93242	Fresno	13
Laton	93242	Kings	13
Lawndale	90260	Los Angeles	8
Laytonville	95454	Mendocino	2
Laytonville-Leggett	95488	Mendocino	1
Laytonville-Leggett	95585	Mendocino	1
Le Grand	95333	Merced	12
Lebec	93243	Kern	16
Lebec	93243	Los Angeles	16
Lebec	93243	Ventura	16
Lee Vining	93541	Mono	16
Lemon Grove	91945	San Diego	10
Lemoncove	93244	Tulare	13
Lemoore	93245	Kings	13
Lewiston	96052	Trinity	16
Likely	96116	Modoc	16
Lincoln	95648	Placer	11
Linden	95236	San Joaquin	12
Lindsay	93247	Tulare	13

Litchfield	96117	Lassen	16
Littlerock	93543	Los Angeles	14
Live Oaks	95953	Sutter	11
Live Oaks	95953	Yuba	11
Livermore	94550	Alameda	12
Livermore	94550	Santa Clara	12
Livermore	94551	Alameda	12
Livermore	94551	Contra Costa	12
Livingston	95334	Merced	12
Llano	93544	Los Angeles	14
Lockerford	95237	San Joaquin	12
Lockwood	93932	Monterey	4
Lodi	95240	San Joaquin	12
Lodi	95242	San Joaquin	12
Loleta	95551	Humboldt	1
Loma Linda	92350	San Bernardino	10
Loma Linda	92354	San Bernardino	10
Lomita	90717	Los Angeles	6
Lompoc	93436	Santa Barbara	5
Lompoc	93437	Santa Barbara	5
Lone Pine	93545	Inyo	16
Long Barn	95335	Tuolumne	16
Long Beach	90802	Los Angeles	6
Long Beach	90803	Los Angeles	6
Long Beach	90804	Los Angeles	6
Long Beach	90805	Los Angeles	8
Long Beach	90806	Los Angeles	6
Long Beach	90807	Los Angeles	8
CITY	**ZIP CODE**	**COUNTY**	**CZ**
Long Beach	90808	Los Angeles	8
Long Beach	90810	Los Angeles	6
Long Beach	90813	Los Angeles	6
Long Beach	90814	Los Angeles	6
Long Beach	90815	Los Angeles	6
Long Beach	90840	Los Angeles	6
Lookout	96054	Modoc	16
Loomis	95650	Placer	11
Los Alamitos	90720	Orange	8

Los Altos	94022	Santa Clara	4
Los Altos	94024	Santa Clara	4
Los Angeles	90001	San Diego	8
Los Angeles	90002	San Diego	8
Los Angeles	90003	San Diego	8
Los Angeles	90004	Los Angeles	9
Los Angeles	90005	Los Angeles	9
Los Angeles	90006	Los Angeles	9
Los Angeles	90007	Los Angeles	8
Los Angeles	90008	Los Angeles	8
Los Angeles	90010	Los Angeles	9
Los Angeles	90011	Los Angeles	8
Los Angeles	90012	Los Angeles	9
Los Angeles	90013	Los Angeles	9
Los Angeles	90014	Los Angeles	9
Los Angeles	90015	Los Angeles	9
Los Angeles	90016	Los Angeles	8
Los Angeles	90017	Los Angeles	9
Los Angeles	90018	Los Angeles	8
Los Angeles	90019	Los Angeles	9
Los Angeles	90020	Los Angeles	9
Los Angeles	90021	Los Angeles	9
Los Angeles	90022	Los Angeles	9
Los Angeles	90023	Los Angeles	8
Los Angeles	90024	Los Angeles	9
Los Angeles	90025	Los Angeles	6
Los Angeles	90026	Los Angeles	9
Los Angeles	90027	Los Angeles	9
Los Angeles	90028	Los Angeles	9
Los Angeles	90029	Los Angeles	9
Los Angeles	90031	Los Angeles	9
Los Angeles	90032	Los Angeles	9
Los Angeles	90033	Los Angeles	9
Los Angeles	90034	Los Angeles	8
Los Angeles	90035	Los Angeles	9
Los Angeles	90036	Los Angeles	9
Los Angeles	90037	Los Angeles	8
Los Angeles	90038	Los Angeles	9
Los Angeles	90039	Los Angeles	9
Los Angeles	90040	Los Angeles	8
Los Angeles	90041	Los Angeles	9
Los Angeles	90042	Los Angeles	9
Los Angeles	90043	Los Angeles	8

CITY	ZIP CODE	COUNTY	CZ
Los Angeles	90044	Los Angeles	8
Los Angeles	90045	Los Angeles	6
Los Angeles	90046	Los Angeles	9
Los Angeles	90047	Los Angeles	8
Los Angeles	90048	Los Angeles	9
Los Angeles	90049	Los Angeles	6
Los Angeles	90056	Los Angeles	8
Los Angeles	90057	Los Angeles	9
Los Angeles	90058	Los Angeles	8
Los Angeles	90059	Los Angeles	8
Los Angeles	90061	Los Angeles	8
Los Angeles	90062	Los Angeles	8
Los Angeles	90063	Los Angeles	9
Los Angeles	90064	Los Angeles	9
Los Angeles	90065	Los Angeles	9
Los Angeles	90066	Los Angeles	6
Los Angeles	90067	Los Angeles	9
Los Angeles	90068	Los Angeles	9
Los Angeles	90071	Los Angeles	9
Los Angeles	90073	Los Angeles	6
Los Angeles	90077	Los Angeles	9
Los Angeles	90089	Los Angeles	8
Los Angeles	90094	Los Angeles	6
Los Angeles	90095	Los Angeles	9
Los Angeles	91306	Los Angeles	9
Los Angeles	91316	Los Angeles	9
Los Angeles	91324	Los Angeles	9
Los Angeles	91325	Los Angeles	9
Los Angeles	91330	Los Angeles	9
Los Angeles	91331	Los Angeles	9
Los Angeles	91335	Los Angeles	9
Los Angeles	91343	Los Angeles	9

Los Angeles	91356	Los Angeles	9
Los Angeles	91401	Los Angeles	9
Los Angeles	91402	Los Angeles	9
Los Angeles	91403	Los Angeles	9
Los Angeles	91405	Los Angeles	9
Los Angeles	91406	Los Angeles	9
Los Angeles	91411	Los Angeles	9
Los Angeles	91423	Los Angeles	9
Los Angeles	91436	Los Angeles	9
Los Angeles	91606	Los Angeles	9
Los Banos	93635	Merced	12
Los Gatos	95030	Santa Clara	4
Los Gatos	95032	Santa Clara	4
Los Gatos	95033	Santa Clara	4
Los Gatos	95033	Santa Cruz	4
Los Molinos	96055	Tehama	11
Lost Hills	93249	Kern	13
Lotus	95651	El Dorado	12
Lower Lake	95457	Lake	2
Loyalton	96118	Sierra	16
CITY	**ZIP CODE**	**COUNTY**	**CZ**
Lucerne	95458	Lake	2
Lucerne Valley	92356	San Bernardino	14
Ludlow	92338	San Bernardino	14
Lynwood	90262	Los Angeles	8
Lytle Creek	92358	San Bernardino	16

M

Macdoel	96058	Siskiyou	16
Mad River	95552	Trinity	2
Madeline	96119	Lassen	16
Madera	93636	Madera	13
Madera	93637	Madera	13
Madera	93638	Madera	13
Madison	95653	Yolo	12
Magalia	95954	Butte	11
Malibu	90263	Los Angeles	6
Malibu	90265	Los Angeles	6
Mammoth Lakes	93546	Mono	16
Manchester	95459	Mendocino	1
Manhattan Beach	90266	Los Angeles	6
Manteca	95336	San Joaquin	12
Manteca	95337	San Joaquin	12
Manton	96059	Shasta	11
Manton	96059	Tehama	11
March Air Reserve Base	92518	Riverside	10
Maricopa	93252	Kern	13
Maricopa	93252	San Luis Obispo	13
Maricopa	93252	Santa Barbara	13
Maricopa	93252	Ventura	13
Marin del Rey	90292	Los Angeles	6
Marina	93933	Monterey	3
Mariposa	95338	Mariposa	12
Markleeville	96120	Alpine	16
Martinez	94553	Contra Costa	12
Marysville	95901	Butte	11
Marysville	95901	Sutter	11
Marysville	95901	Yuba	11
Mather	95655	Sacramento	12
Maxwell	95955	Colusa	11
Maywood	90270	Los Angeles	8
McArthur	96056	Lassen	16
McArthur	96056	Modoc	16
McArthur	96056	Shasta	16
McClellan	95652	Sacramento	12
McCloud	96057	Siskiyou	16
McFarland	93250	Kern	13
McKinleyville	95519	Humboldt	1
McKittrick	93251	Kern	13
McKittrick	93251	San Luis Obispo	13
Meadow Valley	95956	Plumas	16
Meadow Vista	95722	Placer	11
CITY	**ZIP CODE**	**COUNTY**	**CZ**

Mecca	92254	Riverside	15
Mendonico	95460	Mendocino	1
Mendonico-Anderson	95410	Mendocino	1
Mendonico-Anderson	95456	Mendocino	1
Mendota	93640	Fresno	13
Menlo Park	94025	San Mateo	3
Mentone	92359	San Bernardino	16
Merced	95340	Merced	12
Merced	95341	Merced	12
Merced	95348	Merced	12
Meridian	95957	Sutter	11
Middletown	95461	Lake	2
Middletown	95461	Sonoma	2
Midpines	95345	Mariposa	12
Midway City	92655	Orange	6
Milford	96121	Lassen	16
Mill Valley	94941	Marin	3
Millbrae	94030	San Mateo	3
Millville	96062	Shasta	11
Milpitas	95035	Alameda	4
Milpitas	95035	Santa Clara	4
Mineral	96063	Plumas	16
Mineral	96063	Tehama	16
Mira Loma	91752	Riverside	10
Miramonte	93641	Fresno	13
Mission Viejo	92691	Orange	8
Mission Viejo	92692	Orange	8
Mission Viejo	92694	Orange	8
Mi-Wuk Village	95346	Tuolumne	16
Modesto	95350	Stanislaus	12
Modesto	95351	Stanislaus	12
Modesto	95354	Stanislaus	12
Modesto	95355	Stanislaus	12
Modesto	95356	Stanislaus	12
Modesto	95357	Stanislaus	12
Modesto	95358	Stanislaus	12
Mojave	93501	Kern	14
Mojave	93519	Kern	14
Mokelumne Hill	95245	Calaveras	12
Monrovia	91016	Los Angeles	9
Montague	96064	Siskiyou	16
Montclair	91763	San Bernardino	10
Monte Rio	95462	Sonoma	1
Montebello	90640	Los Angeles	9
Monterey	93940	Monterey	3
Monterey	93943	Monterey	3
Monterey Park	91754	Los Angeles	9
Monterey Park	91755	Los Angeles	9
Montgomery Creek	96065	Shasta	16
Montrose	91020	Los Angeles	9
CITY	**ZIP CODE**	**COUNTY**	**CZ**
Montrose	91214	Los Angeles	9
Moorpark	93021	Ventura	9
Moraga	94556	Contra Costa	3
Moreno Valley	92551	Riverside	10
Moreno Valley	92553	Riverside	10
Moreno Valley	92555	Riverside	10
Moreno Valley	92557	Riverside	10
Morgan Hill	95037	Santa Clara	4
Morongo Valley	92256	San Bernardino	14
Morro Bay	93442	San Luis Obispo	5
Moss Beach	94038	San Mateo	3
Moss Landing	95039	Monterey	3
Mount Hamilton	95140	Santa Clara	4
Mountain Center	92561	Riverside	16
Mountain Ranch	95246	Calaveras	12
Mountain View	94035	Santa Clara	4
Mountain View	94040	Santa Clara	4
Mountain View	94041	Santa Clara	4
Mountain View	94043	Santa Clara	4
Mt Baldy	91759	San Bernardino	16
Mt Shasta	96067	Siskiyou	16
Murphys	95247	Calaveras	12

Murrieta	92562	Riverside	10
Murrieta	92563	Riverside	10

N

Napa	94558	Napa	2
Napa	94558	Sonoma	2
Napa	94559	Napa	2
National City	91950	San Diego	7
Needles	92363	San Bernardino	15
Nevada City	95959	Nevada	11
New Cuyama	93254	Santa Barbara	4
Neward	94560	Alameda	3
Newberry Springs	92365	San Bernardino	14
Newcastle	95658	Placer	11
Newman	95360	Merced	12
Newman	95360	Stanislaus	12
Newport Beach	92657	Orange	6
Newport Beach	92660	Orange	6
Newport Beach	92661	Orange	6
Newport Beach	92663	Orange	6
Nicasio	94946	Marin	2
Nice	95464	Lake	2
Nicolaus	95659	Sutter	11
Niland	92257	Imperial	15
Nipomo	93444	San Luis Obispo	5
Nipton	92364	San Bernardino	14
Norco	92860	Riverside	10
Norden	95724	Nevada	16
Norden	95724	Placer	16
North Coast	90742	Orange	6

CITY	ZIP CODE	COUNTY	CZ
North Edwards	93523	Kern	14
North Fork	93643	Madera	16
North Highlands	95660	Sacramento	12
North San Juan	95960	Nevada	16
North San Juan	95960	Sierra	16
North San Juan	95960	Yuba	16
Nortwest Marin	94940	Marin	3
Norwalk	90650	Los Angeles	8
Novato	94945	Marin	2
Novato	94947	Marin	2
Novato	94949	Marin	2
Nuevo	92567	Riverside	10

O

Oak Park	91377	Ventura	9
Oak Run	96069	Shasta	11
Oak View	93022	Ventura	9
Oakdale	95361	San Joaquin	12
Oakdale	95361	Stanislaus	12
Oakhurst	93644	Madera	16
Oakhurst	93644	Mariposa	16
Oakland	94601	Alameda	3
Oakland	94602	Alameda	3
Oakland	94603	Alameda	3
Oakland	94605	Alameda	3
Oakland	94606	Alameda	3
Oakland	94607	Alameda	3
Oakland	94609	Alameda	3
Oakland	94610	Alameda	3
Oakland	94611	Alameda	3
Oakland	94611	Contra Costa	3
Oakland	94612	Alameda	3
Oakland	94613	Alameda	3
Oakland	94618	Alameda	3
Oakland	94619	Alameda	3
Oakland	94621	Alameda	3
Oakley	94561	Contra Costa	12
Occidental	95465	Sonoma	1
Oceano	93445	San Luis Obispo	5
Oceanside	92054	San Diego	7
Oceanside	92056	San Diego	7
Oceanside	92057	San Diego	7

Oceanside	92058	San Diego	7
Ocotillo	92259	Imperial	15
Ojai	93023	Ventura	16
Old Station	96071	Shasta	16
Olivehurst	95961	Yuba	11
O'Neals	93645	Madera	13
Ontario	91761	San Bernardino	10
Ontario	91762	San Bernardino	10
Ontario	91764	San Bernardino	10
Onyx	93255	Kern	16
CITY	**ZIP CODE**	**COUNTY**	**CZ**
Orange	92862	Orange	8
Orange	92865	Orange	8
Orange	92866	Orange	8
Orange	92867	Orange	8
Orange	92868	Orange	8
Orange	92869	Orange	8
Orange Cove	93646	Fresno	13
Orange Cove	93646	Tulare	13
Orangevale	95662	Sacramento	12
Oregon House	95962	Yuba	11
Orick	95555	Humboldt	1
Orinda	94563	Contra Costa	12
Orland	95963	Glenn	11
Orland	95963	Tehama	11
Orleans	95556	Humboldt	2
Oro Grande	92368	San Bernardino	14
Orosi	93647	Fresno	13
Orosi	93647	Tulare	13
Oroville	95965	Butte	11
Oroville	95966	Butte	11
Oroville	95966	Yuba	11
Oxnard	93030	Ventura	6
Oxnard	93033	Ventura	6
Oxnard	93035	Ventura	6
Oxnard	93036	Ventura	6

P

Pacific Grove	93950	Monterey	3
Pacific PLSDS	90272	Los Angeles	6
Pacifica	94044	San Mateo	3
Paicines	95043	Fresno	4
Paicines	95043	San Benito	4
Pala	92059	San Diego	10
Palermo	95968	Butte	11
Palm Desert	92211	Riverside	15
Palm Desert	92260	Riverside	15
Palm Springs	92262	Riverside	15
Palm Springs	92264	Riverside	15
Palmdale	93550	Los Angeles	14
Palmdale	93551	Los Angeles	14
Palmdale	93552	Los Angeles	14
Palmdale	93591	Los Angeles	14
Palo Alto	94301	Santa Clara	4
Palo Alto	94303	San Mateo	4
Palo Alto	94303	Santa Clara	4
Palo Alto	94304	Santa Clara	4
Palo Alto	94306	Santa Clara	4
Palo Cedro	96073	Shasta	11
Palos Verdes Peninsula	90274	Los Angeles	6
Paradise	95969	Butte	11
Paramount	90723	Los Angeles	8
CITY	**ZIP CODE**	**COUNTY**	**CZ**
Parker Dam	92267	San Bernardino	15
Parlier	93648	Fresno	13
Pasadena	91101	Los Angeles	9
Pasadena	91103	Los Angeles	9
Pasadena	91104	Los Angeles	9
Pasadena	91105	Los Angeles	9
Pasadena	91106	Los Angeles	9
Pasadena	91107	Los Angeles	16
Pasadena	91123	Los Angeles	9
Paso Robles	93446	San Luis Obispo	4

Patterson	95363	Stanislaus	12
Pauma Valley	92061	San Diego	10
Paynes Creek	96075	Tehama	11
Pearblossom	93553	Los Angeles	14
Pebble Beach	93953	Monterey	3
Penn Valley	95946	Nevada	11
Penngrove	94951	Sonoma	2
Penryn	95663	Placer	11
Perris	92570	Riverside	10
Perris	92571	Riverside	10
Pescadero	94060	San Mateo	3
Pescadero	94060	Santa Cruz	3
Petaluma	94952	Marin	2
Petaluma	94952	Sonoma	2
Petaluma	94954	Sonoma	2
Petrolia	95558	Humboldt	1
Phelan	92371	San Bernardino	14
Philo	95466	Mendocino	2
Pico Rivera	90660	Los Angeles	9
Piercy	95587	Mendocino	2
Pilot Hill	95664	El Dorado	12
Pilot Hill	95664	Placer	12
Pine Grove	95665	Amador	12
Pine Valley	91962	San Diego	14
Pinecrest	95364	Tuolumne	16
Pinole	94564	Contra Costa	3
Pinon Hills	92372	San Bernardino	14
Pioneer	95666	Amador	16
Pioneer	95666	El Dorado	16
Pismo Beach	93449	San Luis Obispo	5
Pittsburg	94565	Contra Costa	12
Pixley	93256	Tulare	13
Placentia	92870	Orange	8
Placerville	95667	El Dorado	12
Platina	96076	Shasta	11
Platina	96076	Tehama	11
Platina	96076	Trinity	11
Playa Del Ray	90293	Los Angeles	6
Pleasant Grove	95668	Placer	11
Pleasant Grove	95668	Sutter	11
Pleasant Hill	94523	Contra Costa	12
Pleasanton	94566	Alameda	12

CITY	ZIP CODE	COUNTY	CZ
Pleasanton	94588	Alameda	12
Plymouth	95669	Amador	12
Point Arena	95468	Mendocino	1
Point Reyes Station	94956	Marin	3
Pollock Pines	95726	El Dorado	16
Pomona	91766	Los Angeles	9
Pomona	91766	San Bernardino	9
Pomona	91767	Los Angeles	9
Pomona	91768	Los Angeles	9
Pope Valley	94567	Napa	2
Port Costa	94569	Contra Costa	12
Port Hueneme	93041	Ventura	6
Port Hueneme	93042	Ventura	6
Port Hueneme	93043	Ventura	6
Porter Ranch	91326	Los Angeles	9
Porterville	93257	Tulare	13
Portola	96122	Plumas	16
Portola Valley	94028	San Mateo	3
Portola Valley	94028	Santa Clara	3
Posey	93260	Tulare	16
Potrero	91963	San Diego	14
Potter Valley	95469	Lake	2
Potter Valley	95469	Mendocino	2
Poway	92064	San Diego	10
Prather	93651	Fresno	13
Princeton	95970	Colusa	11
Princeton	95970	Glenn	11

Q

Quincy	95971	Plumas	16
	95972	Yuba	11

R

Rackerby			
Raisin City	93652	Fresno	13
Ramona	92065	San Diego	10
Ranchita	92066	San Diego	14
Rancho Cordova	95670	Sacramento	12
Rancho Cordova	95742	Sacramento	12
Rancho Cucamonga	91701	San Bernardino	10
Rancho Cucamonga	91730	San Bernardino	10
Rancho Cucamonga	91737	San Bernardino	10
Rancho Cucamonga	91739	San Bernardino	10
Rancho Mirage	92270	Riverside	15
Rancho Palos Verdes	90275	Los Angeles	6
Rancho Santa Margarita	92688	Orange	8

CITY	ZIP CODE	COUNTY	CZ
Rancho Sante Fe	92067	San Diego	7
Rancho Sante Fe	92091	San Diego	7
Randsburg	93554	Kern	14
Ravendale	96123	Lassen	16
Raymond	93653	Madera	13
Raymond	93653	Mariposa	13
Red Bluff	96080	Tehama	11
Redcrest	95569	Humboldt	2
Redding	96001	Shasta	11
Redding	96002	Shasta	11
Redding	96003	Shasta	11
Redlands	92373	Riverside	10
Redlands	92373	San Bernardino	10
Redlands	92374	San Bernardino	10
Redondo Beach	90277	Los Angeles	6
Redondo Beach	90278	Los Angeles	6
Redway	95560	Humboldt	2
Redwood City	94061	San Mateo	3
Redwood City	94062	San Mateo	3
Redwood City	94063	San Mateo	3
Redwood City	94065	San Mateo	3
Redwood Valley	95470	Mendocino	2
Reedley	93654	Fresno	13
Reedley	93654	Tulare	13
Rescue	95672	El Dorado	12
Rialto	92376	San Bernardino	10
Rialto	92377	San Bernardino	10
Richmond	94801	Contra Costa	3
Richmond	94804	Contra Costa	3
Richmond	94805	Contra Costa	3
Ridgecrest	93555	Inyo	14
Ridgecrest	93555	Kern	14
Ridgecrest	93555	San Bernardino	14
Rio Dell	95562	Humboldt	1
Rio Linda	95673	Sacramento	12
Rio Oso	95674	Sutter	11
Rio Oso	95674	Yuba	11
Rio Vista	94571	Sacramento	12
Rio Vista	94571	Solano	12
Ripon	95366	San Joaquin	12
Riverbank	95367	Stanislaus	12
Riverdale	93656	Fresno	13
Riverdale	93656	Kings	13
Riverside	92501	Riverside	10
Riverside	92503	Riverside	10
Riverside	92504	Riverside	10
Riverside	92505	Riverside	10
Riverside	92506	Riverside	10
Riverside	92507	Riverside	10
Riverside	92508	Riverside	10
Riverside	92509	Riverside	10
Riverside	92509	San Bernardino	10

CITY	ZIP CODE	COUNTY	CZ
Riverside	92521	Riverside	10
Rocklin	95677	Placer	11
Rodeo	94572	Contra Costa	3

Rohnert Park	94928	Sonoma	2
Rosamond	93560	Kern	14
Rosamond	93560	Los Angeles	14
Rosemead	91770	Los Angeles	9
Roseville	95661	Placer	11
Roseville	95661	Sacramento	11
Roseville	95678	Placer	11
Roseville	95747	Placer	11
Rough and Ready	95975	Nevada	11
Rowland Heights	91748	Los Angeles	9
Rumsey	95679	Yolo	12
Running Springs	92382	San Bernardino	16

S

Sacramento	95811	Sacramento	12
Sacramento	95814	Sacramento	12
Sacramento	95815	Sacramento	12
Sacramento	95816	Sacramento	12
Sacramento	95817	Sacramento	12
Sacramento	95818	Sacramento	12
Sacramento	95819	Sacramento	12
Sacramento	95820	Sacramento	12
Sacramento	95821	Sacramento	12
Sacramento	95822	Sacramento	12
Sacramento	95823	Sacramento	12
Sacramento	95824	Sacramento	12
Sacramento	95825	Sacramento	12
Sacramento	95826	Sacramento	12
Sacramento	95827	Sacramento	12
Sacramento	95828	Sacramento	12
Sacramento	95829	Sacramento	12
Sacramento	95830	Sacramento	12
Sacramento	95831	Sacramento	12
Sacramento	95832	Sacramento	12
Sacramento	95833	Sacramento	12
Sacramento	95834	Sacramento	12
Sacramento	95835	Sacramento	12
Sacramento	95836	Sacramento	12
Sacramento	95836	Sutter	12
Sacramento	95837	Sacramento	12
Sacramento	95837	Sutter	12
Sacramento	95838	Sacramento	12
Sacramento	95841	Sacramento	12
Sacramento	95842	Sacramento	12
Sacramento	95843	Sacramento	12
Sacramento	95864	Sacramento	12
Salida	95368	Stanislaus	12
Salinas	93901	Monterey	3
Salinas	93905	Monterey	3

CITY	ZIP CODE	COUNTY	CZ
Salinas	93906	Monterey	3
Salinas	93907	Monterey	3
Salinas	93908	Monterey	3
Salyer	95563	Trinity	16
Samoa	95564	Humboldt	1
San Andreas	95249	Calaveras	12
San Anselmo	94960	Marin	2
San Ardo	93450	Monterey	4
San Bernardino	92401	San Bernardino	10
San Bernardino	92404	San Bernardino	16
San Bernardino	92405	San Bernardino	10
San Bernardino	92407	San Bernardino	10
San Bernardino	92408	San Bernardino	10
San Bernardino	92410	San Bernardino	10
San Bernardino	92411	San Bernardino	10
San Bruno	94066	San Mateo	3
San Carlos	94070	San Mateo	3
San Clemente	92672	Orange	6
San Clemente	92672	San Diego	6
San Clemente	92673	Orange	6
San Diego	92037	San Diego	7
San Diego	92101	San Diego	7
San Diego	92102	San Diego	7
San Diego	92103	San Diego	7
San Diego	92104	San Diego	7

San Diego	92105	San Diego	7
San Diego	92106	San Diego	7
San Diego	92107	San Diego	7
San Diego	92108	San Diego	7
San Diego	92109	San Diego	7
San Diego	92110	San Diego	7
San Diego	92111	San Diego	7
San Diego	92113	San Diego	7
San Diego	92114	San Diego	7
San Diego	92115	San Diego	10
San Diego	92116	San Diego	7
San Diego	92117	San Diego	7
San Diego	92119	San Diego	10
San Diego	92120	San Diego	10
San Diego	92121	San Diego	7
San Diego	92122	San Diego	7
San Diego	92123	San Diego	7
San Diego	92124	San Diego	10
San Diego	92126	San Diego	7
San Diego	92127	San Diego	10
San Diego	92128	San Diego	10
San Diego	92129	San Diego	7
San Diego	92130	San Diego	7
San Diego	92131	San Diego	10
San Diego	92133	San Diego	7
San Diego	92134	San Diego	7
San Diego	92135	San Diego	7
CITY	**ZIP CODE**	**COUNTY**	**CZ**
San Diego	92136	San Diego	7
San Diego	92139	San Diego	7
San Diego	92140	San Diego	7
San Diego	92145	San Diego	7
San Diego	92152	San Diego	7
San Diego	92154	San Diego	7
San Diego	92155	San Diego	7
San Diego	92173	San Diego	7
San Diego	92182	San Diego	7
San Dimas	91773	Los Angeles	9

San Fernando	91340	Los Angeles	9
San Fernando	91344	Los Angeles	9
San Fernando	91345	Los Angeles	9
San Fernando Valley	91352	Los Angeles	9
San Fernando Valley	91602	Los Angeles	9
San Fernando Valley	91605	Los Angeles	9
San Francisco	94102	San Francisco	3
San Francisco	94103	San Francisco	3
San Francisco	94104	San Francisco	3
San Francisco	94105	San Francisco	3
San Francisco	94107	San Francisco	3
San Francisco	94108	San Francisco	3
San Francisco	94109	San Francisco	3
San Francisco	94110	San Francisco	3
San Francisco	94111	San Francisco	3
San Francisco	94112	San Francisco	3
San Francisco	94112	San Mateo	3
San Francisco	94114	San Francisco	3
San Francisco	94115	San Francisco	3
San Francisco	94116	San Francisco	3
San Francisco	94117	San Francisco	3
San Francisco	94118	San Francisco	3
San Francisco	94121	San Francisco	3
San Francisco	94122	San Francisco	3
San Francisco	94123	San Francisco	3
San Francisco	94124	San Francisco	3
San Francisco	94127	San Francisco	3
San Francisco	94128	San Mateo	3
San Francisco	94129	San Francisco	3
San Francisco	94130	San Francisco	3
San Francisco	94131	San Francisco	3
San Francisco	94132	San Francisco	3
San Francisco	94133	San Francisco	3
San Francisco	94134	San Francisco	3
San Francisco	94134	San Mateo	3
San Francisco	94158	San Francisco	3

San Gabriel	91775	Los Angeles	9
San Gabriel	91776	Los Angeles	9
San Geronimo	94963	Marin	2
San Gregorio	94074	San Mateo	3
CITY	**ZIP CODE**	**COUNTY**	**CZ**
San Jacinto	92582	Riverside	10
San Jacinto	92583	Riverside	10
San Joaquin	93660	Fresno	13
San Jose	95002	Santa Clara	4
San Jose	95013	Santa Clara	4
San Jose	95110	Santa Clara	4
San Jose	95111	Santa Clara	4
San Jose	95112	Santa Clara	4
San Jose	95113	Santa Clara	4
San Jose	95116	Santa Clara	4
San Jose	95117	Santa Clara	4
San Jose	95118	Santa Clara	4
San Jose	95119	Santa Clara	4
San Jose	95120	Santa Clara	4
San Jose	95121	Santa Clara	4
San Jose	95122	Santa Clara	4
San Jose	95123	Santa Clara	4
San Jose	95124	Santa Clara	4
San Jose	95125	Santa Clara	4
San Jose	95126	Santa Clara	4
San Jose	95127	Santa Clara	4
San Jose	95128	Santa Clara	4
San Jose	95129	Santa Clara	4
San Jose	95130	Santa Clara	4
San Jose	95131	Santa Clara	4
San Jose	95132	Santa Clara	4
San Jose	95133	Santa Clara	4
San Jose	95134	Santa Clara	4
San Jose	95135	Santa Clara	4
San Jose	95136	Santa Clara	4
San Jose	95138	Santa Clara	4
San Jose	95139	Santa Clara	4
San Jose	95141	Santa Clara	4

San Jose	95148	Santa Clara	4
San Jose	95192	Santa Clara	4
San Juan Bautista	95045	San Benito	4
San Juan Capistrano	92675	Orange	6
San Juan Capistrano	92675	Riverside	6
San Leandro	94577	Alameda	3
San Leandro	94578	Alameda	3
San Leandro	94579	Alameda	3
San Lorenzo	94580	Alameda	3
San Luis Obispo	93401	San Luis Obispo	5
San Luis Obispo	93402	San Luis Obispo	5
San Luis Obispo	93405	San Luis Obispo	5
San Luis Obispo	93407	San Luis Obispo	5
San Marcos	92069	San Diego	10
San Marcos	92078	San Diego	10
San Marcos	92096	San Diego	10
San Marino	91108	Los Angeles	9
San Martin	95046	Santa Clara	4
CITY	**ZIP CODE**	**COUNTY**	**CZ**
San Mateo	94401	San Mateo	3
San Mateo	94402	San Mateo	3
San Mateo	94403	San Mateo	3
San Mateo	94404	San Mateo	3
San Miguel	93451	Kings	4
San Miguel	93451	Monterey	4
San Miguel	93451	San Luis Obispo	4
San Pablo	94806	Contra Costa	3
San Pedro	90731	Los Angeles	6
San Pedro	90732	Los Angeles	6
San Quentin	94964	Marin	2
San Rafael	94901	Marin	2
San Rafael	94903	Marin	2
San Ramon	94582	Contra Costa	12
San Ramon	94583	Alameda	12
San Ramon	94583	Contra Costa	12
San Simeon	93452	San Luis Obispo	5

CITY	ZIP CODE	COUNTY	CZ
Sanger	93657	Fresno	13
Santa Ana	92701	Orange	8
Santa Ana	92703	Orange	8
Santa Ana	92704	Orange	8
Santa Ana	92705	Orange	8
Santa Ana	92706	Orange	8
Santa Ana	92707	Orange	8
Santa Barbara	93101	Santa Barbara	6
Santa Barbara	93103	Santa Barbara	6
Santa Barbara	93106	Santa Barbara	6
Santa Barbara	93108	Santa Barbara	6
Santa Barbara	93109	Santa Barbara	6
Santa Barbara	93110	Santa Barbara	6
Santa Barbara	93111	Santa Barbara	6
Santa Clara	95050	Santa Clara	4
Santa Clara	95051	Santa Clara	4
Santa Clara	95053	Santa Clara	4
Santa Clara	95054	Santa Clara	4
Santa Clarita	91321	Los Angeles	9
Santa Clarita	91350	Los Angeles	9
Santa Clarita	91354	Los Angeles	9
Santa Clarita	91355	Los Angeles	9
Santa Cruz	95060	Santa Cruz	3
Santa Cruz	95062	Santa Cruz	3
Santa Cruz	95064	Santa Cruz	3
Santa Cruz	95065	Santa Cruz	3
Santa Fe Springs	90670	Los Angeles	9
Santa Margar	93453	San Luis Obispo	4
Santa Maria	93454	San Luis Obispo	5
Santa Maria	93454	Santa Barbara	5
Santa Maria	93455	Santa Barbara	5
Santa Maria	93458	San Luis Obispo	5
Santa Maria	93458	Santa Barbara	5
Santa Monica	90401	Los Angeles	6
Santa Monica	90402	Los Angeles	6
Santa Monica	90403	Los Angeles	6
Santa Monica	90404	Los Angeles	6
Santa Monica	90405	Los Angeles	6
Santa Paula	93060	Ventura	9
Santa Rosa	95401	Sonoma	2
Santa Rosa	95403	Sonoma	2
Santa Rosa	95404	Sonoma	2
Santa Rosa	95405	Sonoma	2
Santa Rosa	95407	Sonoma	2
Santa Rosa	95409	Sonoma	2
Santa Rosa	95439	Sonoma	2
Santa Ynez	93460	Santa Barbara	5
Santa Ynez Valley	93441	Santa Barbara	5
Santa Ysabel	92070	San Diego	14
Santee	92071	San Diego	10
Saratoga	95070	Santa Clara	4
Sausalito	94965	Marin	3
Scotia	95565	Humboldt	1
Scott Bar	96085	Siskiyou	16
Scotts Valley	95066	Santa Cruz	3
Sea Ranch	95497	Sonoma	1
Seal Beach	90740	Orange	6
Seal Beach	90743	Orange	6
Seaside	93955	Monterey	3
Sebastopol	95472	Sonoma	2
Seiad Valley	96086	Siskiyou	16
Selma	93662	Fresno	13
Sequoia National Park	93262	Tulare	16
Shafter	93263	Kern	13
Shandon	93461	Kern	4
Shandon	93461	San Luis Obispo	4
Shasta	96087	Shasta	11
Shasta Lake	96019	Shasta	11
Shaver Lake	93664	Fresno	16
Sheridan	95681	Placer	11
Shingle Springs	95682	El Dorado	12
Shingletown	96088	Shasta	11
Shoshone	92384	Inyo	14
Sierra City	96125	Sierra	16

Sierra Madre	91024	Los Angeles	9
Sierraville	96126	Sierra	16
Signal Hill	90755	Los Angeles	6
Silverardo	92676	Orange	8
Simi Valley	93063	Los Angeles	9
Simi Valley	93063	Ventura	9
Simi Valley	93065	Ventura	9
Skyforest	92385	San Bernardino	16
Sloughhouse	95683	Sacramento	12
Smartsville	95977	Nevada	11
Smartsville	95977	Yuba	11
Smith River	95567	Del Norte	1
Snelling	95369	Mariposa	12
CITY	**ZIP CODE**	**COUNTY**	**CZ**
Snelling	95369	Merced	12
Soda Springs	95728	Nevada	16
Soda Springs	95728	Placer	16
Solano Beach	92075	San Diego	7
Soledad	93960	Monterey	3
Solvang	93463	Santa Barbara	5
Somerset	95684	El Dorado	12
Somes Bar	95568	Siskiyou	16
Somis	93066	Ventura	9
Sonoma	95476	Napa	2
Sonoma	95476	Sonoma	2
Sonora	95370	Tuolumne	12
Soquel	95073	Santa Cruz	3
Soulsbyville	95372	Tuolumne	12
South Coastside	94021	San Mateo	3
South El Monte	91733	Los Angeles	9
South Gate	90280	Los Angeles	8
South Lake Tahoe	96150	El Dorado	16
South Pasadena	91030	Los Angeles	9
South San Francisco	94080	San Mateo	3
Spring Valley	91977	San Diego	10
Spring Valley	91978	San Diego	10
Springville	93265	Tulare	13

Squaw Valley	93675	Fresno	13
Squaw Valley	96146	Placer	16
St Helena	94574	Napa	2
St Helena	94574	Sonoma	2
Standish	96128	Lassen	16
Stanford	94305	Santa Clara	4
Stanton	90680	Orange	8
Stevenson Ranch	91381	Los Angeles	9
Stevinson	95374	Merced	12
Stewarts Point	95480	Sonoma	1
Stinson Beach	94970	Marin	3
Stockton	95202	San Joaquin	12
Stockton	95203	San Joaquin	12
Stockton	95204	San Joaquin	12
Stockton	95205	San Joaquin	12
Stockton	95206	San Joaquin	12
Stockton	95207	San Joaquin	12
Stockton	95209	San Joaquin	12
Stockton	95210	San Joaquin	12
Stockton	95211	San Joaquin	12
Stockton	95212	San Joaquin	12
Stockton	95215	San Joaquin	12
Stockton	95219	San Joaquin	12
Stonyford	95979	Colusa	11
Stratford	93266	Kings	13
Strathmore	93267	Tulare	13
Studio City	91604	Los Angeles	9
Suisun City	94585	Contra Costa	12
Suisun City	94585	Solano	12
CITY	**ZIP CODE**	**COUNTY**	**CZ**
Summerland	93067	Santa Barbara	6
Sun City	92584	Riverside	10
Sun City	92585	Riverside	10
Sun City	92586	Riverside	10
Sun City	92587	Riverside	10
Sunland	91040	Los Angeles	16
Sunnyside-Tahoe City	96145	Placer	16

Sunnyvale	94085	Santa Clara	4
Sunnyvale	94086	Santa Clara	4
Sunnyvale	94087	Santa Clara	4
Sunnyvale	94089	Santa Clara	4
Sunol	94586	Alameda	12
Susanville	96130	Lassen	16
Sutter	95982	Sutter	11
Sutter Creek	95685	Amador	12

T

Taft	93268	Kern	13
Tahoe Vista	96148	Placer	16
Tahoma	96142	El Dorado	16
Tahoma	96142	Placer	16
Taylorsville	95983	Plumas	16
Tecate	91980	San Diego	14
Tecopa	92389	Inyo	14
Tehachapi	93561	Kern	16
Temeluca	92590	Riverside	10
Temeluca	92591	Riverside	10
Temeluca	92592	Riverside	10
Temple City	91780	Los Angeles	9
Templeton	93465	San Luis Obispo	4
Termo	96132	Lassen	16
Terra Bella	93270	Tulare	13
Thermal	92274	Imperial	15
Thermal	92274	Riverside	15
Thousand Oaks	91320	Ventura	9
Thousand Oaks	91360	Ventura	9
Thousand Oaks	91362	Los Angeles	9
Thousand Oaks	91362	Ventura	9
Thousand Palms	92276	Riverside	15
Three Rivers	93271	Tulare	13
Tipton	93272	Tulare	13
Tollhouse	93667	Fresno	13
Toluca Ter	91601	Los Angeles	9
Tomales	94971	Marin	3
Topanga	90290	Los Angeles	6
Topaz	96133	Mono	16
Torrance	90501	Los Angeles	6
Torrance	90502	Los Angeles	6
Torrance	90503	Los Angeles	6
Torrance	90504	Los Angeles	8
Torrance	90505	Los Angeles	6

CITY	ZIP CODE	COUNTY	CZ
Torrance	90506	Los Angeles	8
Tracy	95304	San Joaquin	12
Tracy	95376	San Joaquin	12
Tracy	95377	Alameda	12
Tracy	95377	San Joaquin	12
Tracy	95391	Alameda	12
Tracy	95391	San Joaquin	12
Tranquility	93668	Fresno	13
Trinidad	95570	Humboldt	1
Trinity Center	96091	Trinity	16
Trona	93562	San Bernardino	14
Truckee	96161	Nevada	16
Truckee	96161	Placer	16
Truckee	96162	Nevada	16
Truckee	96162	Placer	16
Tujunga	91042	Los Angeles	16
Tulare	93274	Tulare	13
Tulelake	96134	Modoc	16
Tulelake	96134	Siskiyou	16
Tuolumne	95379	Tuolumne	12
Tupman	93276	Kern	13
Turlock	95380	Merced	12
Turlock	95380	Stanislaus	12
Turlock	95382	Stanislaus	12
Tustin	92780	Orange	8
Tustin	92782	Orange	8
Twain	95984	Plumas	16
Twain Harte	95383	Tuolumne	16
Twentynine Palms	92277	San Bernardino	14

Twentynine Palms	92278	San Bernardino	14
Twin Bridges	95735	El Dorado	16

U

Ukiah	95482	Mendocino	2
Union City	94587	Alameda	3
Universal City	91608	Los Angeles	9
Upland	91784	San Bernardino	10
Upland	91786	Los Angeles	10
Upland	91786	San Bernardino	10
Upper Lake	95485	Lake	2
Upper Lake	95493	Lake	2
Upper Lake-Clearlake Oaks	95443	Lake	2

V

Vacaville	95687	Solano	12
Vacaville	95688	Napa	12
Vacaville	95688	Solano	12
Vallecito	95251	Calaveras	12
CITY	**ZIP CODE**	**COUNTY**	**CZ**
Vallejo	94589	Solano	2
Vallejo	94590	Solano	3
Vallejo	94591	Solano	12
Vallejo	94592	Solano	3
Valley Center	92082	San Diego	10
Valley Ford	94972	Sonoma	1
Valley Springs	95252	Calaveras	12
Valley Village	91607	Los Angeles	9
Valyermo	93563	Los Angeles	16
Venice	90291	Los Angeles	6
Ventura	93001	Ventura	6
Ventura	93003	Ventura	6
Ventura	93004	Ventura	6
Vernalis	95385	San Joaquin	12
Vernalis	95385	Stanislaus	12
Victorville	92392	San Bernardino	14
Victorville	92394	San Bernardino	14
Victorville	92395	San Bernardino	14
Vidal	92280	San Bernardino	15
Villa Park	92861	Orange	8
Vinton	96135	Plumas	16
Visalia	93277	Tulare	13
Visalia	93291	Tulare	13
Visalia	93292	Tulare	13
Vista	92081	San Diego	10
Vista	92083	San Diego	10
Vista	92084	San Diego	10
Volcano	95689	Amador	12

W

Walnut	91789	Los Angeles	9
Walnut Creek	94595	Contra Costa	12
Walnut Creek	94596	Contra Costa	12
Walnut Creek	94597	Contra Costa	12
Walnut Creek	94598	Contra Costa	12
Walnut Grove	95690	Sacramento	12
Walnut Grove	95690	San Joaquin	12
Walnut Grove	95690	Solano	12
Warner Springs	92086	San Diego	14
Wasco	93280	Kern	13
Waterford	95386	Stanislaus	12
Watsonville	95076	Monterey	3
Watsonville	95076	Santa Clara	3
Watsonville	95076	Santa Cruz	3
Weaverville	96093	Trinity	16
Weed	96094	Siskiyou	16
Weldon	93283	Kern	16
Wendel	96136	Lassen	16
West Covina	91790	Los Angeles	9
West Covina	91791	Los Angeles	9
West Covina	91792	Los Angeles	9

West Hills	91304	Los Angeles	9
CITY	**ZIP CODE**	**COUNTY**	**CZ**
West Hills	91304	Ventura	9
West Hills	91307	Los Angeles	9
West Hills	91307	Ventura	9
West Hollywood	90069	Los Angeles	9
West Point	95255	Amador	12
West Point	95255	Calaveras	12
West Sacramento	95605	Yolo	12
West Sacramento	95691	Yolo	12
Westlake Village	91361	Los Angeles	9
Westlake Village	91361	Ventura	9
Westminster	92683	Orange	6
Westmorland	92281	Imperial	15
Westwood	96137	Lassen	16
Westwood	96137	Plumas	16
Wheatland	95692	Yuba	11
White Water	92282	Riverside	15
Whitethorn	95589	Humboldt	1
Whitethorn	95589	Mendocino	1
Whitmore	96096	Shasta	11
Whittier	90601	Los Angeles	9
Whittier	90602	Los Angeles	9
Whittier	90603	Los Angeles	9
Whittier	90604	Los Angeles	9
Whittier	90605	Los Angeles	9
Whittier	90606	Los Angeles	9
Wildomar	92595	Riverside	10
Williams	95987	Colusa	11
Willits	95490	Mendocino	2
Willow Creek	95573	Humboldt	2
Willows	95988	Glenn	11
Wilmington	90744	Los Angeles	6
Wilseyville	95257	Calaveras	12
Wilton	95693	Sacramento	12
Winchester	92596	Riverside	10
Windsor	95492	Sonoma	2
Winterhaven	92283	Imperial	15
Winters	95694	Solano	12
Winters	95694	Yolo	12
Winton	95388	Merced	12
Wishon	93669	Madera	16
Wofford Heights	93285	Kern	16
Woodbridge	95258	San Joaquin	12
Woodcare	94973	Marin	2
Woodlake	93286	Tulare	13
Woodland	95695	Yolo	12
Woodland	95776	Yolo	12
Woodland Hills	91303	Los Angeles	9
Woodland Hills	91364	Los Angeles	9
Woodland Hills	91367	Los Angeles	9
Woodland Hills	91371	Los Angeles	9
Woody	93287	Kern	13
Wrightwood	92397	San Bernardino	16
CITY	**ZIP CODE**	**COUNTY**	**CZ**

Y

Yorba Linda	92886	Orange	8
Yorba Linda	92887	Orange	8
Yorkville	95494	Mendocino	2
Yosemite National Park	95389	Mariposa	16
Yosemite National Park	95389	Tuolumne	16
Yountville	94599	Napa	2
Yreka	96097	Siskiyou	16
Yuba City	95991	Sutter	11
Yuba City	95993	Sutter	11
Yucaipa	92399	Riverside	10
Yucaipa	92399	San Bernardino	10
Yucca Valley	92284	San Bernardino	14

Z

Zamora	95698	Yolo	12

Zenia	95595	Trinity	2

JA2.2 California Design Location Data

The data contained in the following table was obtained through a joint effort by the Southern California Chapter and the Golden Gate Chapter of ASHRAE. It is reprinted here with the written permission of Southern California Chapter ASHRAE, Inc. The values for 1.0 percent drybulb and 1.0 percent mean coincident wetbulb (MCWB) are interpolated.[1]

The data in Table 2-3 is developed from A full listing of design location data for California is contained in the ASHRAE publication *SPCDX, Climate Data for Region X, Arizona, California, Hawaii, and Nevada* (ISBN 200021, May 1982) and *Supplement to Climatic Data for Region X, Arizona, California, Hawaii, Nevada* (ISBN 20002956, November 1994). The publication may be ordered from:

Order Desk
Building News
10801 National Blvd.
Los Angeles, CA 90064
(888) 264-7483 or (310) 474-7771
http://www.bnibooks.com

1 The interpolation formula is 2.0%value + 0.6667 (0.5%Value – 2.0% value + 0.5).

Table 2-3 – Design Day Data for California Cities

					Cooling												Heating		
					0.10%		0.50%		1.00%		2.00%								
City	Climate Zone	Latitude	Elevation (ft)	Longitude	DB	MCWB	DB	MCWB	DB	MCWB	DB	MCWB	Design Wetbulb 0.1%	Design Wetbulb 0.5%	Outdoor Daily Range	Winter Median of Extremes	Design Drybulb (0.2%)	Design Drybulb (0.6%)	HDD*
Adelanto	14	34.6	2865	117.4	105	67	101	65	100	64	97	62	70	68	39	14	24	27	1654
Adin RS	16	41.2	4195	121	96	61	92	60	91	60	88	59	65	63	43	-7	-2	4	
Agoura Hills	9	34.2	700	118.8	103	70	96	68	94	68	90	66	73	71	29	27	31	34	
Alameda NAS	3	37.8	15	122.3	88	65	82	64	80	64	76	62	66	64	21	35	38	40	2507
Alamo	12	37.9	410	122.9	102	69	97	68	96	68	92	66	72	70	30	23	28	31	
Albany	3	37.9	40	122.3	88	65	83	64	81	64	77	62	66	64	16	30	35	38	
Alderpoint	2	40.2	460	123.6	100	69	95	67	94	67	90	65	70	68	39	21	27	30	3424
Alhambra	9	34	483	118.1	100	71	96	70	94	70	90	68	73	71	25	30	35	37	
Aliso Viejo	6	33.6	50	117.7	91	69	83	68	81	68	76	66	71	69	18	30	33	36	
Almaden AFS	4	37.2	3470	121.9	95	62	90	60	89	60	85	59	64	62	20	20	25	29	4468
Alondra Park	8	33.9	50	118.3	91	69	86	68	85	68	81	66	71	69	17	35	40	42	
Alpine	10	32.8	1735	116.8	99	69	95	68	94	68	91	67	72	70	35	27	32	35	
Alta Sierra	16	35.7	6500	118.6	87	62	84	61	83	61	80	59	65	63	32	-4	1	8	2428
Altadena	9	34.2	1200	118.1	99	68	94	67	92	67	88	66	72	70	31	32	37	39	1920
Alturas RS	16	41.5	4400	120.6	99	62	96	61	95	61	91	59	65	63	43	-10	-4	0	6895
Alum Rock	4	37.4	70	121.8	95	68	90	66	88	66	84	64	70	68	22	28	33	36	
American Canyon	2	37.6	85	122.3	93	67	90	66	88	66	84	64	70	68	23	28	33	36	
Anaheim	8	33.8	158	117.9	99	69	92	68	90	68	85	67	73	71	26	32	37	39	
Anderson	11	40.5	430	122.3	107	71	103	70	101	70	97	68	72	70	30	26	31	34	
Angwin	2	38.6	1815	122.4	98	66	93	64	92	64	88	62	69	66	33	25	30	33	
Antioch	12	38	60	121.8	102	70	97	68	95	68	91	66	70	69	34	22	28	31	2627
Apple Valley	14	34.5	2935	117.2	105	66	101	65	100	65	97	64	70	68	38	14	21	25	

City	Climate Zone	Latitude	Elevation (ft)	Longitude	Cooling 0.10% DB	Cooling 0.10% MCWB	Cooling 0.50% DB	Cooling 0.50% MCWB	Cooling 1.00% DB	Cooling 1.00% MCWB	Cooling 2.00% DB	Cooling 2.00% MCWB	Design Wetbulb 0.1%	Design Wetbulb 0.5%	Outdoor Daily Range	Heating Winter Median of Extremes	Heating Design Drybulb (0.2%)	Heating Design Drybulb (0.6%)	HDD*
Aptos	3	37	500	121.9	94	67	88	66	87	65	83	63	69	67	30	27	32	35	
Arcadia	9	34.2	475	118	100	69	96	68	95	68	91	67	73	71	30	31	36	38	
Arcata	1	41	218	124.1	75	61	69	59	68	59	65	58	61	60	11	28	31	33	5029
Arden	12	38.5	80	121.4	104	70	100	69	98	69	94	67	73	71	35	28	33	35	
Arroyo Grande	5	35.1	105	120.6	92	66	86	64	84	64	79	62	67	65	18	28	32	35	
Artesia	8	33.8	50	118.1	99	71	91	70	89	70	85	68	73	71	23	33	37	40	
Arvin	13	35.2	445	118.8	106	71	102	69	101	69	98	68	74	72	30	26	29	32	
Ash Mtn	13	36.5	1708	118.8	105	69	101	68	100	68	97	66	72	70	30	25	31	33	2703
Ashland	3	37.7	45	122.1	92	66	86	65	85	64	81	62	68	66	24	26	31	34	977
Atascadero	4	35.5	837	120.7	94	66	89	67	88	67	84	65	70	68	42	25	29	32	
Atherton	3	37.5	50	122.2	90	66	84	64	82	64	78	62	68	66	27	23	29	33	
Atwater	12	37.3	150	120.6	102	72	99	70	98	69	94	67	74	72	38	24	30	34	
Auberry	16	37.1	2140	119.5	102	69	98	67	97	66	95	64	71	69	36	21	27	30	3313
Auburn	11	38.9	1292	121.1	103	69	100	67	99	67	95	66	72	69	33	25	30	33	3089
Avalon	6	33.4	25	118.3	83	64	75	62	73	62	69	60	68	66	11	37	41	44	2204
Avenal	13	36	550	120.1	103	70	98	70	97	70	93	69	73	72	34	23	28	31	
Avocado Heights	9	34.2	550	118	101	69	97	68	95	68	91	68	74	72	30	28	32	35	741
Azusa	9	34.1	605	118.2	101	70	97	69	95	69	91	68	74	72	36	31	36	38	
Baker	14	35.3	940	116.1	115	73	112	72	111	72	108	70	77	75	29	23	28	31	
Bakersfield AP	13	35.4	475	119.1	106	71	102	70	101	70	98	68	74	72	34	26	31	35	2185
Balch PH	14	36.9	1720	116.0	100	67	97	66	96	66	93	64	71	69	26	26	31	34	
Baldwin Park	9	34	394	118	100	69	96	69	94	69	90	68	73	72	32	31	36	38	
Banning	15	33.9	2349	116.9	104	69	100	68	99	68	96	67	73	71	34	20	26	30	
Barrett Dam	10	32.7	1623	116.7	103	69	97	68	96	68	92	67	73	71	35	22	26	28	2656
Barstow	14	34.9	2162	117	107	69	104	69	103	69	100	67	74	72	35	16	23	27	2580

City	Climate Zone	Latitude	Elevation (ft)	Longitude	Cooling 0.10% DB	Cooling 0.10% MCWB	Cooling 0.50% DB	Cooling 0.50% MCWB	Cooling 1.00% DB	Cooling 1.00% MCWB	Cooling 2.00% DB	Cooling 2.00% MCWB	Design Wetbulb 0.1%	Design Wetbulb 0.5%	Outdoor Daily Range	Winter Median of Extremes	Heating Design Drybulb (0.2%)	Heating Design Drybulb (0.6%)	HDD*
Baywood-Los Osos	5	35.3	100		88	65	82	64	80	64	76	62	67	65	14	31	36	38	
Beale AFB	11	39.1	113	121.4	105	71	102	70	101	70	97	68	74	72	34	25	28	30	2835
Beaumont	10	33.9	2605	117	103	68	99	67	98	67	95	66	72	70	38	22	27	30	2628
Bell	8	33.9	143	118.2	97	70	91	69	89	69	85	67	72	70	22	33	38	41	
Bell Gardens	8	33.9	160	118.2	97	70	91	69	87	67	85	67	72	70	22	32	37	40	
Bellflower	8	33.8	73	118.1	98	70	91	69	89	69	85	67	72	70	21	32	37	40	
Belmont	3	37.5	33	122.3	90	66	84	64	82	64	78	62	68	66	24	29	34	36	
Ben Lomond	3	37.1	450	122.1	92	67	85	66	83	65	79	63	69	67	30	25	30	33	
Benicia	12	38.1	55	122.1	99	69	93	67	91	67	87	65	70	68	30	28	33	36	
Berkeley	3	37.9	345	122.3	90	64	83	63	81	63	76	61	66	64	16	33	37	40	2950
Berryessa Lake	2	38.6	480	122.1	102	70	98	69	96	69	92	67	72	70	35	26	31	34	
Beverly Hills	9	34.1	268	118.2	94	69	88	68	87	68	83	66	71	69	20	39	43	46	
Big Bar RS	16	40.8	1260	121.8	102	68	98	67	97	67	93	65	70	68	46	19	25	28	
Big Bear Lake	16	34.2	6745	116.9	87	59	83	58	82	58	79	56	64	62	32	-3	3	7	6850
Bishop AP	16	37.4	4108	118.4	103	61	100	60	99	60	97	58	65	63	40	5	12	16	4313
Blackhawk	12	37.7	10	121.9	88	65	82	64	80	64	76	62	66	64	21	35	38	40	977
Blackwells Corner	13	35.6	644	119.9	99	68	94	66	93	66	89	65	71	69	31	23	28	32	
Bloomington	10	34	980	117.4	106	71	102	70	101	70	98	69	75	73	34	30	35	38	
Blue Canyon AP	16	39.3	5280	120.7	88	60	85	59	84	59	81	57	64	62	20	13	20	24	5704
Blythe AP	15	33.6	395	114.7	115	74	112	73	111	73	108	71	80	78	27	28	33	36	1219
Blythe CO	15	33.6	268	114.6	115	74	112	73	111	73	108	71	80	78	27	24	29	32	1312
Boca	16	39.4	5575	120.1	92	58	89	57	88	57	84	55	62	60	46	-18	-13	-10	8340
Bodie	16	38.2	8370	119	83	50	80	49	79	49	76	48	55	53	42	-21	-16	-13	
Bonadella Ranchos – Madera Rancho	13	36.8	270	119.9	105	72	101	70	100	70	96	68	74	72	40		29	32	1273

City	Climate Zone	Latitude	Elevation (ft)	Longitude	Cooling 0.10% DB	Cooling 0.10% MCWB	Cooling 0.50% DB	Cooling 0.50% MCWB	Cooling 1.00% DB	Cooling 1.00% MCWB	Cooling 2.00% DB	Cooling 2.00% MCWB	Design Wetbulb 0.1%	Design Wetbulb 0.5%	Outdoor Daily Range	Winter Median of Extremes	Heating Design Drybulb (0.2%)	Heating Design Drybulb (0.6%)	HDD*
Bonita	7	32.7	105	117	91	69	82	67	81	66	78	64	70	68	20	28	32	44	1864
Boron AFS	14	35.1	3015	117.6	106	70	103	69	102	69	98	68	73	71	35	18	23	26	3000
Borrego Desert PK	15	33.2	805	116.4	112	76	107	74	105	74	101	72	79	77	36	25	30	33	
Bostonia	10	32.8	600	116.9	96	70	91	69	88	69	81	67	72	70	30	29	34	36	
Boulder Creek	3	37.2	493	122.1	92	67	85	65	83	65	79	63	69	67	30	25	30	33	1120
Bowman Dam	16	39.4	5347	120.7	89	59	86	57	85	57	82	55	63	60	26	9	17	22	5964
Boyes Hot Sprgs	2	38.2	300	122.5	100	70	95	69	93	69	89	67	72	70	40	22	28	31	1289
Brannan Island	12	38.1	30	121.7	100	69	95	68	93	68	89	67	72	70	10	24	28	31	
Brawley 2 SW	15	33	-100	115.6	113	74	110	73	109	73	105	73	81	79	32	25	30	33	1204
Brea Dam	8	33.9	275	117.9	100	69	94	68	92	68	86	66	73	71	29	30	34	37	
Brentwood	12	37.9	71	121.7	102	70	97	68	95	67	89	65	71	68	34	27	32	35	
Bridgeport	16	38.2	6470	119.2	89	56	86	54	85	54	82	53	60	57	41	-20	-15	-12	
Broderick-Bryte	12	38.6	20	121.5	104	71	100	69	98	69	94	67	72	71	36	25	31	35	
Brooks Ranch	12	38.8	294	122.2	104	71	99	70	97	70	93	68	73	71	35	19	25	28	2968
Buena Park	8	33.9	75	118	98	69	92	68	90	68	85	67	72	70	25	31	35	38	
Burbank AP	9	34.2	699	118.4	101	70	96	68	94	68	90	67	72	70	28	29	34	36	1701
Burbank Vly Pump	9	34.2	655	118.4	101	69	96	68	94	68	90	66	72	70	28	29	34	36	1678
Burlingame	3	37.6	10	122.4	88	67	82	64	80	64	76	63	68	65	20	30	35	37	
Burney	16	40.9	3127	121.7	95	64	92	63	91	63	88	61	67	65	42	0	5	12	6404
Butler Valley (Korbel)	1	40.7	420	123.9	91	66	86	64	85	64	81	62	67	65	22	20	26	29	
Buttonwillow	13	35.4	269	119.5	103	71	99	70	98	70	95	68	74	72	36	20	26	29	2621
Cabrillo NM	7	32.7	410	117.2	89	69	84	68	83	68	80	67	71	69	12	39	43	45	
Cachuma Lake	5	34.6	781	120	97	69	92	67	91	67	87	65	70	68	19	26	31	34	
Calabasas	9	34.2	1100	118.6	102	71	98	70	97	70	93	69	73	71	26	26	30	33	2348
Calaveras Big Trees	16	38.3	4696	120.3	92	61	88	60	87	60	84	58	64	62	33	11	18	23	5848

City	Climate Zone	Latitude	Elevation (ft)	Longitude	Cooling 0.10% DB	Cooling 0.10% MCWB	Cooling 0.50% DB	Cooling 0.50% MCWB	Cooling 1.00% DB	Cooling 1.00% MCWB	Cooling 2.00% DB	Cooling 2.00% MCWB	Design Wetbulb 0.1%	Design Wetbulb 0.5%	Outdoor Daily Range	Winter Median of Extremes	Heating Design Drybulb (0.2%)	Heating Design Drybulb (0.6%)	HDD*
Calexico	15	32.7	12	115.5	114	74	110	73	109	73	106	71	81	79	28	26	31	34	
California City	14	35.1	2400	118	107	69	104	68	103	68	99	66	72	70	33	10	17	22	2572
Callahan	16	41.3	3185	122.8	97	63	93	62	92	62	88	60	66	64	35	7	15	20	
Calwa	13	36.8	330	119.8	105	73	101	71	100	70	97	68	75	73	34	23	27	29	
Camarillo	6	34.2	147	119.2	91	69	84	68	82	68	78	67	71	69	22	28	32	35	
Cambria AFS	5	35.5	690	121.1	78	62	72	61	70	61	66	59	64	62	16	30	35	38	3646
Cameron Park	12	38.6	1800	121	101	67	98	66	97	66	93	65	70	68	42	20	26	29	2235
Camp Pardee	12	38.2	658	120.9	106	71	103	70	102	70	98	69	74	72	36	27	32	35	2812
Camp Pendleton	7	33.4	50	117.4	88	69	85	68	84	68	80	67	71	69	12	34	38	40	
Camp Roberts	4	35.8	765	120.8	106	72	101	71	99	71	95	69	74	72	45	16	24	27	2890
Campbell	4	37.3	195	121.8	93	69	88	66	87	66	83	65	71	68	30	28	33	36	
Campo	14	32.6	2630	116.5	101	67	95	66	94	66	90	66	71	69	41	16	23	27	3303
Canoga Park	9	34.2	790	118.6	104	71	99	70	97	70	93	69	74	72	38	25	30	33	1884
Cantil	14	35.3	2010	118	111	71	107	71	106	71	103	70	74	73	32	12	19	24	
Canyon Dam	16	40.1	4555	121.1	93	60	90	59	89	59	85	57	64	62	39	1	6	13	6834
Canyon Lake	10	33.8	1500	117.3	105	70	101	69	100	69	97	68	74	72	39	22	27	30	
Capitola	3	37	64	122	94	67	88	66	86	65	81	63	69	67	24	27	32	35	
Cardiff-by-the-Sea	7	33	80	117.3	87	68	83	67	81	67	77	65	70	68	12	35	39	41	
Carlsbad	7	33.2	44	117.4	87	68	83	67	81	67	77	65	70	68	10	34	38	40	
Carmel Valley	3	36.5	425	121.7	94	68	88	66	86	66	80	65	69	67	20	25	30	33	
Carmel-by-the-Sea	3	36.5	20	121.9	87	65	78	62	76	62	71	61	66	63	20	30	35	38	968
Carmichael	12	38.6	100	121.5	104	70	100	69	98	69	94	68	73	71	35	25	35	37	1290
Carpinteria	6	34.4	385	119.5	90	69	83	67	81	67	77	65	70	68	15	30	34	37	
Carson	6	33.8	60	118.3	96	69	88	68	86	68	82	66	71	69	19	33	38	40	

City	Climate Zone	Latitude	Elevation (ft)	Longitude	Cooling 0.10% DB	Cooling 0.10% MCWB	Cooling 0.50% DB	Cooling 0.50% MCWB	Cooling 1.00% DB	Cooling 1.00% MCWB	Cooling 2.00% DB	Cooling 2.00% MCWB	Design Wetbulb 0.1%	Design Wetbulb 0.5%	Outdoor Daily Range	Heating Winter Median of Extremes	Heating Design Drybulb (0.2%)	Heating Design Drybulb (0.6%)	HDD*
Casa de Oro-Mount Helix	10	32.7	530	117.0	96	71	88	69	87	69	84	67	72	70	19	34	38	41	404
Castle AFB	12	37.4	188	120.6	105	71	101	70	100	70	96	69	73	71	33	24	28	31	2590
Castro Valley	3	37.6	177	122.2	93	67	87	67	85	67	80	65	69	68	25	24	29	32	
Castroville	3	36.8	20	121.8	86	66	77	63	75	63	70	61	67	64	18	32	37	40	1151
Cathedral City	15	33.8	400	116.5	117	74	113	73	112	73	109	72	79	78	33	26	31	34	374
Catheys Valley	12	37.4	1000	120.1	102	69	99	68	98	68	94	67	72	70	38	21	27	30	
Cecilville	16	41.1	3000	123.1	95	63	89	62	88	61	84	59	65	63	44	13	20	24	
Cedarville	16	41.5	4670	120.2	97	61	94	60	93	60	89	58	65	63	35	1	6	13	6304
Centerville PH	11	39.8	522	121.7	105	70	100	68	99	68	96	67	72	70	40	25	30	33	2895
Ceres	12	37.6	90	121	101	72	96	70	94	69	90	67	74	72	36	24	30	34	
Cerritos	8	33.9	34	118.1	99	71	92	69	90	69	85	68	73	71	23	33	38	40	
Charter Oak	9	34.1	600	117.9	101	70	97	69	95	69	91	68	74	72	34	29	34	36	
Chatsworth	9	34.2	964	118.6	98	69	93	68	91	68	87	66	72	70	38	26	31	34	664
Cherry Valley Dam	16	38	4765	119.9	96	62	92	61	91	61	88	59	65	63	32	9	16	21	
Cherryland	3	37.5	100	122.1	93	67	86	66	84	66	79	64	69	67	24	26	31	37	
Chester	16	40.3	4525	121.2	94	62	91	61	90	61	86	59	65	63	33	-3	2	8	
Chico Exp Sta	11	39.7	205	121.8	105	70	102	69	100	69	96	68	72	71	37	22	27	30	2878
China Lake	14	35.7	2220	117.7	112	70	108	68	107	68	104	68	74	72	33	15	22	25	2560
Chino	10	34	714	117.7	104	70	100	69	98	69	94	68	74	72	35	27	32	35	
Chino Hills	10	34.1	800	117.7	104	70	100	69	98	69	94	68	74	72	35	27	32	35	800
Chowchilla	13	37	200	120.3	104	72	101	70	100	70	96	68	74	72	38	22	28	31	1250
Chula Vista	7	32.6	9	117.1	90	70	84	68	83	68	79	66	71	69	9	33	38	40	2072
Citrus Heights	12	38.7	138	121.5	104	71	100	70	98	70	94	68	74	72	36	24	26	29	
Claremont	9	34.1	1201	117.8	101	69	97	68	95	68	91	66	73	71	34	29	34	36	2049

City	Climate Zone	Latitude	Elevation (ft)	Longitude	Cooling 0.10% DB	Cooling 0.10% MCWB	Cooling 0.50% DB	Cooling 0.50% MCWB	Cooling 1.00% DB	Cooling 1.00% MCWB	Cooling 2.00% DB	Cooling 2.00% MCWB	Design Wetbulb 0.1%	Design Wetbulb 0.5%	Outdoor Daily Range	Winter Median of Extremes	Heating Design Drybulb (0.2%)	Heating Design Drybulb (0.6%)	HDD*
Clarksburg	12	38.4	14	121.5	102	70	97	69	95	69	91	67	72	70	35	24	29	32	2971
Clayton	12	38	60	121.9	102	70	97	68	95	67	89	65	71	68	34	27	32	35	
Clearlake Highlands	2	39	1360	122.7	101	69	97	68	95	67	89	65	71	69	36	15	22	26	
Cloverdale	2	38.8	320	123	102	70	97	69	95	68	89	66	72	70	37	26	31	34	2763
Clovis	13	36.8	404	119.7	105	72	102	70	101	70	98	68	74	72	36	22	28	32	
Coachella	15	33.7	-76	116.2	114	74	110	73	109	73	106	73	80	79	28	25	30	34	
Coalinga	13	36.2	671	120.4	103	70	98	70	97	70	93	69	73	72	34	23	28	31	2592
Colfax	11	39.1	2418	121	100	66	97	65	96	65	92	63	69	67	29	22	28	31	3424
Colton	10	34.1	978	117.3	105	70	102	68	101	68	97	67	74	72	35	28	33	36	
Colusa	11	39.2	60	122	103	72	100	70	98	70	94	68	74	71	36	23	29	31	2793
Commerce	8	33.9	175	118.2	98	69	92	68	90	68	86	67	72	70	23	33	37	39	
Compton	8	33.9	71	118.2	97	69	90	68	88	68	83	67	72	70	21	33	37	39	1606
Concord	12	38	195	112	102	70	97	68	95	67	89	65	71	68	34	27	32	35	3035
Corcoran	13	36.1	200	119.7	106	72	102	71	101	71	98	70	74	73	36	22	28	31	2666
Corning	11	39.9	487	122.2	106	71	103	70	102	69	98	67	73	71	33	23	28	31	1330
Corona	10	33.9	710	117.6	104	70	100	69	98	69	92	67	74	72	35	26	31	34	1794
Coronado	7	32.7	20	117.2	89	69	82	67	80	67	76	65	70	68	10	36	39	41	1500
Corte Madera	3	37.9	55	122.5	97	68	91	66	89	66	84	64	69	68	34	28	33	35	
Costa Mesa	6	33.7	100	117.9	88	68	81	66	79	66	73	65	70	68	16	31	36	38	1482
Cotati	2	38.3	100	122.7	99	69	94	68	93	68	89	66	71	69	32	24	28	30	1205
Country Club	12	37.8	600	121.3	102	69	97	68	96	68	92	66	72	70	30	68	28	31	977
Covelo	2	39.8	1385	123.3	99	67	93	65	91	65	87	63	69	67	43	15	22	26	4179
Covina	9	34.1	575	117.9	101	70	97	69	95	69	91	68	74	72	34	29	34	36	
Crescent City	1	41.8	40	124.2	75	61	69	59	68	59	65	58	61	60	18	28	33	36	4445
Crestline	16	34.2	4900	117.3	90	62	86	61	85	61	81	59	66	64	26	13	20	24	3200

City	Climate Zone	Latitude	Elevation (ft)	Longitude	Cooling 0.10% DB	Cooling 0.10% MCWB	Cooling 0.50% DB	Cooling 0.50% MCWB	Cooling 1.00% DB	Cooling 1.00% MCWB	Cooling 2.00% DB	Cooling 2.00% MCWB	Design Wetbulb 0.1%	Design Wetbulb 0.5%	Outdoor Daily Range	Heating Winter Median of Extremes	Heating Design Drybulb (0.2%)	Heating Design Drybulb (0.6%)	HDD*
Crockett	12	38	9	122.2	96	68	90	66	89	66	85	64	70	67	23	28	33	36	
Crows Landing	12	37.4	140	121.1	101	70	96	68	94	68	89	66	72	70	33	23	28	31	2767
Cucamonga	10	34.1	1450	117.6	103	69	99	68	97	67	93	65	73	71	31	29	34	36	
Cudahy	8	33.9	130	118.2	98	70	91	69	89	69	85	67	72	70	21	33	37	39	
Culver City	8	34	106	118.4	96	70	88	69	87	69	83	67	72	70	18	35	40	42	1515
Cupertino	4	37.3	70	122	96	68	88	67	86	66	80	64	70	68	30	28	33	36	
Cuyama	4	34.9	2255	116.6	99	68	96	67	94	67	89	66	72	70	42	13	20	24	
Cuyamaca	14	33	4650	116.6	92	64	85	62	84	61	81	59	67	65	29	11	18	23	4848
Cypress	8	33.8	75	118	98	70	92	69	90	69	85	67	72	70	24	31	35	38	
Daggett AP	14	34.9	1915	116.8	109	68	106	68	105	68	102	66	73	72	33	21	26	29	2203
Daly City	3	37.6	410	122.5	84	65	78	62	77	62	73	61	66	63	16	34	37	39	
Dana Point	6	33.5	100	117.7	91	69	84	68	82	68	78	66	71	69	13	30	33	36	600
Danville	12	37.8	368	122	102	69	97	68	96	68	92	66	72	70	30	23	28	31	977
Davis	12	38.5	60	121.8	103	72	99	70	97	70	93	68	74	71	41	24	30	34	2844
De Sabla	11	39.9	2713	121.6	97	66	94	64	92	64	88	62	68	66	35	18	24	27	4237
Death Valley	14	36.5	-194	116.9	121	77	118	76	117	76	114	74	81	79	28	27	33	37	1147
Deep Springs Clg	16	37.5	5225	118	98	60	95	59	94	59	92	58	64	62	35	-3	2	8	
Deer Creek PH	11	39.3	4455	120.9	93	61	91	60	90	60	87	58	65	63	39	10	17	22	5863
Del Aire	6	34	100	118.4	91	69	84	67	83	67	79	66	71	69	15	37	40	42	383
Delano	13	35.8	323	119.3	106	71	102	70	101	70	98	69	74	72	36	22	25	28	
Denair	12	37.6	137	120.8	100	70	95	69	93	69	89	67	72	70	38	22	28	31	2974
Desert Hot Springs	15	34	1060	116.5	115	73	111	72	110	72	107	71	78	77	35	24	29	32	400
Diamond Bar	9	34	880	117.8	101	69	97	68	96	68	92	66	73	71	33	28	33	35	
Dinuba	13	36.5	340	119.4	104	73	101	70	100	70	96	69	75	73	36	24	30	34	
Discovery Bay	12	38.1	10	121.6	102	70	97	68	95	67	89	65	71	68	34	27	32	35	

City	Climate Zone	Latitude	Elevation (ft)	Longitude	Cooling 0.10% DB	Cooling 0.10% MCWB	Cooling 0.50% DB	Cooling 0.50% MCWB	Cooling 1.00% DB	Cooling 1.00% MCWB	Cooling 2.00% DB	Cooling 2.00% MCWB	Design Wetbulb 0.1%	Design Wetbulb 0.5%	Outdoor Daily Range	Winter Median of Extremes	Heating Design Drybulb (0.2%)	Heating Design Drybulb (0.6%)	HDD*
Dixon	12	38.4	100	121.9	104	72	99	70	97	70	93	68	74	71	36	24	30	33	2826
Dobbins	11	39.4	1640	121.2	104	70	101	68	100	68	96	67	72	70	31	24	29	32	
Donner Mem Stt Pk	16	39.3	5937	120.3	85	56	82	56	81	56	77	54	60	58	40	-3	3	6	
Donner Summit	16	39.4	7239	120.3	80	53	77	53	76	52	72	50	57	55	40	-8	-1	3	8290
Downey	8	33.9	110	118	98	71	90	70	88	70	84	68	73	71	21	32	37	39	
Downieville RS	16	39.6	2895	120.8	98	64	95	63	94	63	90	61	68	66	42	13	20	24	
Doyle	16	40	4390	120.1	96	63	93	62	92	61	88	59	66	64	42	0	5	12	
Dry Canyon Res	16	34.5	1455	118.5	105	71	100	69	99	69	96	68	74	72	32	24	29	32	
Duarte	9	34.1	500	118	100	69	96	68	94	68	90	67	73	71	33	31	36	38	
Dublin	12	37.7	200	121.5	99	69	93	67	91	67	86	65	70	68	35	24	29	32	
Dudleys	12	37.7	3000	120.1	97	65	94	64	93	64	90	62	68	66	44	10	17	22	4959
Duttons Landing	12	38.2	20	122.3	96	68	91	66	89	66	84	64	70	68	31	26	31	34	
Eagle Mtn	14	33.8	973	115.5	113	72	110	71	109	71	105	69	77	75	24	32	37	39	1138
Earlimart	13	35.8	283	119.3	106	71	102	70	101	70	98	69	74	72	36	23	26	29	1100
East Compton	8	34	71	118.2	97	69	90	68	88	68	83	67	72	70	21	33	37	39	436
East Hemet	10	33.7	1655	116.9	109	70	104	69	103	69	101	67	74	72	40	20	25	28	
East La Mirada	9	33.9	115	118.0	99	70	91	69	89	69	85	68	73	71	26	31	36	38	
East Los Angeles	9	34	250	118.3	99	69	92	68	90	68	86	67	72	70	21	38	41	43	
East Palo Alto	3	37.5	25	122.1	93	66	85	64	83	64	77	62	68	66	25	26	31	34	1103
East Park Res	11	39.4	1205	122.5	101	69	97	68	96	68	92	66	71	69	38	19	25	28	3455
East Pasadena	9	34.2	864	118.1	99	69	94	68	92	68	88	67	73	71	30	32	37	40	452
East Porterville	13	36.1	393	119.0	106	71	102	70	101	70	97	69	74	72	36	25	30	33	1129
East San Gabriel	9	34.1	450	118.1	99	70	94	69	92	69	88	68	73	71	30	30	35	37	431
Edwards AFB	14	34.9	2316	117.9	107	69	104	68	103	68	99	66	72	70	35	10	17	22	3123
El Cajon	10	32.7	525	117	96	70	91	69	90	69	87	67	72	70	30	29	34	36	

City	Climate Zone	Latitude	Elevation (ft)	Longitude	Cooling 0.10% DB	Cooling 0.10% MCWB	Cooling 0.50% DB	Cooling 0.50% MCWB	Cooling 1.00% DB	Cooling 1.00% MCWB	Cooling 2.00% DB	Cooling 2.00% MCWB	Design Wetbulb 0.1%	Design Wetbulb 0.5%	Outdoor Daily Range	Winter Median of Extremes	Heating Design Drybulb (0.2%)	Heating Design Drybulb (0.6%)	HDD*
El Capitan Dam	10	32.9	600	116.8	105	71	98	70	97	70	93	68	74	72	35	29	34	36	1533
El Centro	15	32.8	-30	115.6	115	74	111	73	110	73	107	73	81	79	34	26	35	38	1212
El Cerrito	3	37.8	70	122.3	91	66	84	64	81	64	75	62	68	65	17	30	35	38	
El Dorado Hills	12	38.6	673	121.1	103	70	100	69	98	69	94	67	72	71	36	24	30	34	
El Mirage	14	34.6	2910	117.6	105	69	101	68	100	68	97	66	72	70	31	9	16	21	
El Monte	9	34.1	271	118	101	71	97	70	95	70	91	68	73	71	30	31	36	39	
El Paso de Robles	4	35.6	721	120.7	102	65	95	65	94	65	90	65	69	67	44	16	20	23	1768
El Rio	6	34.3	50	119.2	95	69	88	68	86	68	82	66	71	69	20	30	34	37	
El Segundo	6	33.9	105	118.4	91	69	84	68	83	68	79	66	71	69	14	37	40	42	
El Sobrante	3	37.9	55	122.3	91	66	87	65	86	65	82	64	69	67	25	30	35	38	823
El Toro MCAS	8	33.7	380	117.7	96	69	89	69	87	69	82	68	73	71	26	34	38	41	1591
El Toro Station	8	33.7	380	117.7	96	69	89	69	87	69	82	68	73	71	26	34	38	41	560
Electra PH	12	38.3	715	120.7	106	70	102	69	101	69	98	68	73	71	41	23	28	31	2858
Elk Grove	12	38.4	50	121.4	104	71	100	69	98	69	94	68	73	71	35	29	34	36	1150
Elk Valley	1	42	1705	123.7	96	65	90	63	88	63	84	61	67	65	39	16	23	27	5404
Elsinore	10	33.7	1285	117.3	105	71	101	70	100	70	98	69	74	72	39	22	26	29	2128
Encinitas	7	33	50	117.3	87	68	83	67	81	67	77	65	70	68	10	35	39	41	
Encino	9	34.2	750	118.5	103	71	98	69	96	69	92	67	74	71	27	28	33	36	664
Enterprise	11	40.6	470	122.3	107	69	103	68	101	68	97	67	72	70	29	26	31	34	
Escondido	10	33.1	660	117.1	97	69	90	68	88	68	84	67	72	70	29	26	31	34	2005
Eureka	1	40.8	43	124.2	75	61	69	59	68	59	65	58	61	60	11	30	35	38	4679
Exeter	13	36.3	350	119.1	104	72	101	71	100	71	97	69	74	72	39	24	29	32	1236
Fair Oaks	12	38.7	50	121.3	104	70	100	69	98	69	94	69	72	71	36	23	29	33	
Fairfax	2	38	110	122.6	96	68	90	66	88	65	83	63	71	68	34	26	31	34	
Fairfield FS	12	38.3	38	122	103	69	98	68	96	68	91	66	73	71	34	24	30	33	2686

City	Climate Zone	Latitude	Elevation (ft)	Longitude	Cooling 0.10% DB	Cooling 0.10% MCWB	Cooling 0.50% DB	Cooling 0.50% MCWB	Cooling 1.00% DB	Cooling 1.00% MCWB	Cooling 2.00% DB	Cooling 2.00% MCWB	Design Wetbulb 0.1%	Design Wetbulb 0.5%	Outdoor Daily Range	Heating Winter Median of Extremes	Heating Design Drybulb (0.2%)	Heating Design Drybulb (0.6%)	HDD*
Fairmont	14	34.7	3060	118.4	100	67	96	66	95	66	92	65	71	69	22	22	28	31	3330
Fairview	3	35.9	3519	118.5	97	67	94	66	93	66	90	64	70	68	43	11	18	23	
Fallbrook	10	33.6	660	117.3	94	68	89	67	88	67	85	66	71	69	29	26	31	34	2077
Farmersville	13	36.3	350	119.2	104	72	101	72	100	71	97	69	74	72	39	24	29	32	1236
Felton	3	37	100	122.1	94	68	88	66	86	66	81	64	69	67	28	27	32	35	1097
Ferndale	1	40.5	1445	124.3	76	57	66	56	65	56	62	54	59	57	12	28	33	35	
Fillmore	9	34.4	435	118.9	100	70	94	69	92	69	87	67	73	71	30	28	32	35	
Five Points	13	36.4	285	120.2	103	71	99	70	97	70	93	68	73	71	36	21	27	30	
Fleming Fish & Game	16	40.4	4000	120.3	96	62	93	61	92	61	88	59	66	64	40	-3	2	8	
Florence-Graham	8	34	175	118.3	98	69	90	68	88	68	84	67	72	70	19	35	40	43	
Florin	12	38.5	100	121.4	104	71	100	69	98	69	94	68	73	71	35	29	34	36	
Folsom Dam	12	38.7	350	121.2	104	70	101	69	99	69	95	67	72	71	36	25	31	35	
Fontana	10	34.1	1090	117.4	105	70	101	69	100	69	97	67	74	72	33	30	35	38	1530
Foothill Farms	12	38.6	90	121.3	104	71	100	70	98	70	94	68	73	71	36	24	30	34	
Forest Glen	16	40.4	2340	123.3	96	65	92	64	91	64	88	62	67	65	42	12	19	24	
Fort Baker	3	37.8	15	122.5	87	66	81	65	79	65	73	65	67	65	12	33	38	40	3080
Fort Bidwell	16	41.9	4498	120.1	93	60	90	59	89	59	85	57	64	62	38	-2	3	10	6381
Fort Bragg	1	39.5	80	123.8	75	60	67	59	66	59	62	58	62	61	15	29	34	37	4424
Fort Jones RS	16	41.6	2725	122.9	98	64	93	63	92	63	88	61	67	65	44	5	13	18	5590
Fort MacArthur	7	33.7	200	118.3	92	69	84	68	82	68	78	66	71	69	13	35	40	42	1819
Fort Ord	3	36.7	134	121.8	86	65	77	63	75	62	70	60	67	64	18	24	29	32	3818
Fort Ross	1	38.5	116	123.3	79	63	74	62	71	61	65	59	64	62	19	30	35	37	4127
Fortuna	1	40.6	100	124.2	75	61	69	59	68	59	65	58	61	60	11	30	35	38	2000
Foster City	3	37.5	20	122.7	92	67	84	65	82	65	76	63	68	66	22	29	34	36	
Fountain Valley	6	33.7	60	118	97	70	90	68	88	68	84	67	72	70	18	33	38	40	

City	Climate Zone	Latitude	Elevation (ft)	Longitude	Cooling 0.10% DB	Cooling 0.10% MCWB	Cooling 0.50% DB	Cooling 0.50% MCWB	Cooling 1.00% DB	Cooling 1.00% MCWB	Cooling 2.00% DB	Cooling 2.00% MCWB	Design Wetbulb 0.1%	Design Wetbulb 0.5%	Outdoor Daily Range	Winter Median of Extremes	Heating Design Drybulb (0.2%)	Heating Design Drybulb (0.6%)	HDD*
Freedom	3	37	1495	121.8	89	67	85	64	83	64	79	62	68	65	22	27	32	34	
Fremont	3	37.5	56	122	94	67	88	65	86	65	81	63	69	67	24	25	30	33	
Fresno AP	13	36.8	328	119.7	104	73	101	71	100	70	97	68	75	73	34	24	28	30	2650
Friant Gov Camp	13	37	410	119.7	106	72	103	70	102	70	100	68	74	72	40	23	28	31	2768
Fullerton	8	33.9	340	117.9	100	70	94	69	92	69	87	68	73	71	26	30	35	37	
Galt	12	38.2	40	121.3	101	70	97	68	95	68	91	67	72	70	38	23	28	31	1240
Garden Acres	12	38	20	121.3	103	71	98	69	97	69	93	67	73	71	35	24	28	30	1334
Garden Grove	8	33.6	85	117.9	98	70	91	68	89	68	84	67	72	70	23	31	36	38	
Gardena	8	33.9	40	118.3	92	69	85	68	84	68	80	66	71	69	18	32	37	39	
George AFB	14	34.6	2875	117.4	105	67	102	65	101	64	98	62	70	68	31	19	23	26	2887
Georgetown RS	12	38.9	3001	120.8	98	64	95	63	94	63	90	61	68	66	31	18	24	27	
Giant Forest	16	36.6	6412	118.8	84	56	81	55	80	55	77	53	60	58	26	5	13	18	
Gillespie Field	10	32.8	385	117.0	98	71	91	70	89	70	85	68	73	71	30	24	29	32	
Gilroy	4	37	194	121.6	101	70	93	68	91	67	86	65	72	69	25	23	28	31	
Glen Avon	10	34	827	117.5	105	70	101	69	99	69	95	67	74	72	35	28	33	35	
Glendale	9	34.2	563	118.3	101	70	96	68	94	68	90	67	73	71	28	30	35	37	
Glendora	9	34.1	822	117.9	102	69	98	68	96	68	92	67	73	71	35	30	35	37	
Glennville	16	35.7	3140	118.7	97	67	94	66	93	66	90	64	70	68	43	11	18	23	4423
Gold Rock Rch	15	32.9	485	114.8	113	73	110	72	109	72	106	70	79	77	28	31	36	38	
Golden Hills	16	35.1	4000	118.5	97	66	93	65	92	65	89	64	69	67	33	13	20	24	
Granada Hills	6	34.4	1032	118.5	100	70	95	68	93	68	89	66	73	70	37	28	31	34	664
Grand Terrace	10	34.1	1000	117.3	105	70	102	68	101	68	97	67	74	72	35	28	33	36	611
Grant Grove	13	36.7	6600	119	82	56	78	55	77	54	74	52	59	57	26	6	14	19	7044
Grass Valley	11	39.2	2400	121.1	99	67	96	65	95	65	91	63	69	67	29	19	25	28	
Graton	2	38.4	200	122.9	95	68	91	67	88	66	82	64	70	68	34	22	28	31	3409

City	Climate Zone	Latitude	Elevation (ft)	Longitude	Cooling 0.10% DB	Cooling 0.10% MCWB	Cooling 0.50% DB	Cooling 0.50% MCWB	Cooling 1.00% DB	Cooling 1.00% MCWB	Cooling 2.00% DB	Cooling 2.00% MCWB	Design Wetbulb 0.1%	Design Wetbulb 0.5%	Outdoor Daily Range	Winter Median of Extremes	Heating Design Drybulb (0.2%)	Heating Design Drybulb (0.6%)	HDD*
Greenacres	13	35.3	400	119.1	106	71	102	70	101	70	98	68	74	72	34	26	31	35	934
Greenfield	4	36.2	287	121.2	92	67	88	65	87	65	84	64	70	68	32	22	27	30	1020
Grossmont	7	32.7	530	117	96	69	89	68	88	68	84	66	71	69	23	31	36	38	
Grover City	5	35.1	100	120.6	93	69	86	64	84	64	80	62	67	65	18	30	34	37	
Guadalupe	5	35	85	120.6	92	66	86	64	84	64	79	62	67	65	18	28	32	35	1035
Hacienda Hts	9	34	300	118	100	69	96	68	94	68	90	67	73	71	28	31	36	38	
Haiwee	16	36.1	3825	118	102	65	99	64	98	64	95	62	68	66	27	15	22	26	3700
Half Moon Bay	3	37.5	60	122.4	83	64	76	62	74	61	69	59	65	63	15	32	37	39	3843
Hamilton AFB	2	38.1	3	122.5	95	69	88	67	86	67	81	65	73	70	28	27	30	32	3311
Hanford	13	36.3	242	119.7	102	71	99	70	98	70	94	68	73	71	37	22	28	31	2736
Happy Camp RS	16	41.8	1150	123.4	103	67	97	66	96	66	92	65	69	67	41	18	24	27	4263
Hat Creek PH 1	16	40.9	3015	121.6	99	65	96	64	95	64	91	62	68	66	48	2	7	17	5689
Hawaiian Gardens	8	33.8	75	118.1	97	70	91	69	89	69	84	67	72	70	23	32	37	39	
Hawthorne	8	33.9	70	118.4	92	69	85	68	84	68	80	66	71	69	16	37	40	42	
Hayfield Pumps	14	33.7	1370	115.6	112	71	108	70	107	70	104	68	77	75	31	24	29	32	1529
Hayward	3	37.7	530	122.1	92	66	86	65	85	64	81	62	68	66	24	26	31	34	2909
Healdsburg	2	38.6	102	122.9	102	69	95	68	94	68	90	66	71	69	37	26	31	34	2572
Hemet	10	33.7	1655	117	109	70	104	69	103	69	101	67	74	72	40	20	25	28	
Henshaw Dam	10	33.2	2700	116.8	99	68	94	67	93	67	90	66	71	69	38	15	22	26	3708
Hercules	3	38	15	122.3	91	66	87	65	86	65	82	64	69	67	25	30	35	38	823
Hermosa Beach	6	33.9	16	118.4	92	69	84	68	82	68	78	66	71	69	12	38	42	45	
Hesperia	14	34.4	3191	117.3	105	67	101	65	100	65	97	63	70	68	38	14	21	25	1654
Hetch Hetchy	16	38	3870	119.8	93	62	89	61	88	61	85	59	65	63	32	14	21	25	4816
Highland	10	34.1	1315	117.2	106	70	102	69	101	69	97	68	74	72	36	26	31	34	
Hillcrest Center	16	35.4	500		106	71	102	70	101	70	98	68	74	72	34	26	31	35	

City	Climate Zone	Latitude	Elevation (ft)	Longitude	Cooling 0.10% DB	Cooling 0.10% MCWB	Cooling 0.50% DB	Cooling 0.50% MCWB	Cooling 1.00% DB	Cooling 1.00% MCWB	Cooling 2.00% DB	Cooling 2.00% MCWB	Design Wetbulb 0.1%	Design Wetbulb 0.5%	Outdoor Daily Range	Heating Winter Median of Extremes	Heating Design Drybulb (0.2%)	Heating Design Drybulb (0.6%)	HDD*
Hillsborough	3	37.6	352	122.3	90	66	82	65	80	65	74	64	68	66	23	30	35	37	
Hilt	16	42	2900	122.6	97	64	93	62	92	62	89	60	66	64	39	5	13	18	
Hollister	4	36.9	280	121.4	96	68	89	67	87	67	81	65	70	68	30	21	27	30	2725
Hollywood	9	34	384	118.4	96	70	89	69	87	69	83	67	72	70	20	36	41	44	
Home Gardens	10	33.9	678	117.5	104	70	100	69	98	69	92	67	74	72	35	26	31	34	
Hoopa	2	41	360	123.7	100	67	92	66	91	66	87	64	69	67	25	23	28	31	
Huntington Beach	6	33.7	40	117.8	91	69	83	67	81	67	76	66	71	69	14	34	38	41	
Huntington Lake	16	37.2	7020	119.2	80	55	77	54	76	53	73	51	58	56	25	3	11	16	7632
Huntington Park	8	34	175	118	98	70	90	69	88	69	84	67	72	70	20	38	42	45	
Idlewild	1	41.9	1250	124	103	68	96	66	95	66	92	65	69	67	40	18	24	27	
Idria	4	36.4	2650	120.7	97	66	92	65	91	64	87	62	68	66	27	24	29	32	3128
Idyllwild	1	33.7	5397	116.7	93	62	89	61	88	61	84	60	67	65	35	9	16	21	
Imperial AP	15	32.8	-59	115.6	114	74	110	73	109	73	106	72	81	79	31	26	31	34	1060
Imperial Beach	7	32.5	23	117.1	87	69	82	68	81	68	78	67	71	69	10	35	39	41	1839
Imperial CO	15	32.9	-64	115.6	112	73	108	72	107	72	104	71	80	78	31	29	34	36	976
Independence	16	36.8	3950	118.2	104	61	101	60	100	60	97	60	65	63	31	12	19	24	
Indio	15	33.7	11	116.3	115	75	112	75	111	75	107	74	81	79	30	24	29	32	1059
Inglewood	8	33.9	105	118	92	68	85	67	84	67	80	65	70	68	15	37	40	42	
Inyokern NAS	16	35.7	2440	117.8	110	71	106	68	105	68	102	66	75	71	37	15	22	26	2772
Ione	12	38.3	298	120.9	101	70	97	68	95	68	91	67	72	70	38	23	28	31	
Iron Mtn	11	34.1	922	115.1	116	75	112	74	111	74	108	73	80	78	26	29	34	36	1251
Irvine	8	33.7	50	118	96	69	88	68	86	68	82	67	72	70	27	33	37	40	
Isla Vista	6	34.5	40	119.9	90	69	83	67	81	67	77	65	70	68	20	33	38	40	
Jess Valley	16	41.3	5300	120.3	92	59	89	58	88	58	84	56	63	61	35	-7	-2	4	7045
John Wayne AP	6	33.6	115	117.9	98	70	91	68	89	68	84	67	72	70	26	33	37	39	1496

City	Climate Zone	Latitude	Elevation (ft)	Longitude	Cooling 0.10% DB	Cooling 0.10% MCWB	Cooling 0.50% DB	Cooling 0.50% MCWB	Cooling 1.00% DB	Cooling 1.00% MCWB	Cooling 2.00% DB	Cooling 2.00% MCWB	Design Wetbulb 0.1%	Design Wetbulb 0.5%	Outdoor Daily Range	Winter Median of Extremes	Heating Design Drybulb (0.2%)	Heating Design Drybulb (0.6%)	HDD*
Julian Wynola	14	33.1	3650	116.8	96	66	91	64	90	64	87	62	69	67	39	20	24	26	4049
Kentfield	2	38	120	122.6	97	66	91	65	89	65	84	63	70	68	35	27	32	35	3009
Kerman	13	36.6	216	120.1	105	73	101	71	100	70	97	68	75	73	34	24	28	30	1262
Kern River PH 1	13	35.5	970	118.8	106	72	103	71	102	71	99	69	75	73	26	30	35	37	1878
Kern River PH 3	16	35.8	2703	118.6	103	69	100	68	99	68	96	66	72	70	34	19	25	28	2891
Kettleman Stn	13	36.1	508	120.1	104	71	100	70	98	70	93	68	74	72	31	26	31	34	2180
King City	4	36.2	320	121.1	94	67	90	65	89	65	85	64	70	68	36	20	26	29	2639
Kingsburg	13	36.4	297	119.6	104	73	101	71	100	71	97	69	75	73	36	24	30	34	1300
Klamath	1	41.5	25	124.1	79	62	71	60	70	60	66	58	64	61	18	26	31	33	4509
Knights Ferry	12	37.8	315	120.6	103	70	99	68	98	68	94	67	73	71	37	19	25	28	
La Canada-Flintridge	16	34.2	1365	118	99	69	95	68	93	68	88	66	72	70	30	32	36	38	
La Crescenta-Montrose	9	34.2	1565	118	98	69	94	68	92	68	87	66	72	70	33	31	35	37	
La Habra	8	33.9	305	118	100	69	94	68	92	68	87	67	72	70	27	30	35	37	
La Habra Heights	9	34	400	118	100	69	94	68	92	68	87	67	72	70	27	30	35	37	
La Mesa	7	32.8	530	117	94	70	88	69	87	69	84	67	72	70	23	34	39	41	1567
La Mirada	9	33.9	115	118	99	70	91	69	89	69	85	68	73	71	26	31	36	38	
La Palma	8	33.9	75	118	98	69	92	68	90	68	85	67	72	70	25	31	35	38	
La Puente	9	34	320	118	101	71	97	70	95	70	91	69	74	72	28	31	36	38	
La Quinta	15	33.8	400	116.3	116	74	112	73	111	73	108	72	79	78	34	26	32	34	332
La Riviera	12	38.6	190	121.3	104	71	100	70	98	70	94	68	73	71	32	30	35	37	1025
La Verne	9	34.1	1235	118	101	69	97	68	95	68	91	67	73	71	34	29	34	36	
Ladera Heights	8	34.1	100	118.4	91	67	84	67	83	67	79	66	71	69	14	37	40	42	383
Lafayette	12	37.9	535	122.1	100	69	94	67	92	67	87	66	71	69	32	24	29	32	
Laguna Beach	6	33.5	35	117.8	91	69	83	68	81	68	76	66	71	69	18	30	33	36	2222

City	Climate Zone	Latitude	Elevation (ft)	Longitude	Cooling 0.10% DB	Cooling 0.10% MCWB	Cooling 0.50% DB	Cooling 0.50% MCWB	Cooling 1.00% DB	Cooling 1.00% MCWB	Cooling 2.00% DB	Cooling 2.00% MCWB	Design Wetbulb 0.1%	Design Wetbulb 0.5%	Outdoor Daily Range	Heating Winter Median of Extremes	Heating Design Drybulb (0.2%)	Heating Design Drybulb (0.6%)	HDD*
Laguna Niguel	6	33.6	500	117.7	95	67	87	66	85	65	81	63	71	67	22	33	37	40	
Lake Arrowhead	16	34.2	5205	117.2	90	62	86	61	85	61	81	59	66	64	26	13	20	24	5310
Lake Elsinore	10	33.7	1233	117.3	105	70	101	69	100	69	97	68	74	72	39	22	27	30	827
Lake Los Angeles	14	34.7	2300	117.8	106	68	102	67	101	67	98	66	72	70	35	12	17	20	1455
Lake Spaulding	16	39.3	5156	120.6	89	58	86	57	85	57	83	55	62	60	34	3	11	16	6447
Lakeland Village	10	33.6	1233	117.3	105	70	101	69	100	69	97	68	74	72	39	12	27	30	827
Lakeport	2	39	1347	122.9	97	67	93	66	92	65	88	63	69	67	41	20	26	29	3728
Lakeshore	16	40.9	1075	119.2	104	69	100	68	99	68	95	66	71	69	28	29	34	36	
Lakeside	10	32.8	690	117	95	69	90	68	89	68	86	66	72	70	20	26	31	34	
Lakewood	8	33.9	45	118	98	70	90	68	88	68	84	66	72	70	22	33	37	40	
Lamont	13	35.3	500	120	106	72	102	71	101	71	98	69	75	73	34	26	32	35	
Lancaster	14	34.7	2340	118.2	106	68	102	67	101	67	98	66	72	70	35	12	17	20	
Larksfield-Wikiup	2	38.5	170	122.8	99	69	96	68	95	68	92	66	71	69	35	24	27	29	1249
Larkspur	3	37.9	20	122.5	97	68	91	66	89	66	84	64	69	68	34	28	33	35	
Las Plumas	11	39.7	506	121.4	104	71	101	70	100	70	96	68	73	71	32	24	29	32	
Lathrop	12	37.8	22	121.3	103	71	98	69	97	69	93	67	73	71	35	24	28	30	1300
Lava Beds	16	41.7	4770	121.5	93	59	89	58	88	58	84	56	63	61	41	-1	4	11	
Lawndale	8	33.9	66	118	92	69	85	68	84	68	80	66	71	69	16	37	40	42	
Le Grand	12	37.2	255	120.3	101	70	96	68	95	68	91	66	72	70	38	23	28	31	2696
Lemon Grove	7	32.7	437	117.2	96	71	88	69	87	69	84	67	72	70	19	34	38	41	
Lemoncove	13	36.4	513	119	105	72	102	70	101	70	98	68	72	70	38	25	38	41	2513
Lemoore NAS	13	36.3	228	120	104	72	101	71	100	71	97	69	74	72	37	19	25	28	2960
Lennox	8	33.9	71	117.8	92	69	85	68	84	68	80	66	71	69	16	37	41	44	
Lincoln Village	12	38	12	121.3	101	70	96	68	95	68	91	67	72	70	37	24	28	30	1334
Linda	11	39	60	121.6	105	72	102	70	101	70	97	68	74	72	30	27	32	35	1160

City	Climate Zone	Latitude	Elevation (ft)	Longitude	Cooling 0.10% DB	Cooling 0.10% MCWB	Cooling 0.50% DB	Cooling 0.50% MCWB	Cooling 1.00% DB	Cooling 1.00% MCWB	Cooling 2.00% DB	Cooling 2.00% MCWB	Design Wetbulb 0.1%	Design Wetbulb 0.5%	Outdoor Daily Range	Winter Median of Extremes	Heating Design Drybulb (0.2%)	Heating Design Drybulb (0.6%)	HDD*
Lindsay	13	36.2	395	119.1	105	72	101	71	100	71	97	69	74	72	40	24	29	32	2634
Little Panoche	13	36.8	677	120.7	100	68	94	67	92	67	86	66	71	69	33	23	28	31	
Live Oak	11	39.2	75	121.7	105	70	102	69	101	69	97	69	73	71	36	24	29	32	1160
Livermore	12	37.7	490	122	100	69	95	68	93	68	88	67	71	70	35	22	25	28	3012
Livingston	12	37.3	165	120.7	103	72	100	70	99	70	95	68	74	72	39	24	30	34	1244
Llano Shawnee	14	34.5	3820	117.8	104	68	99	67	98	67	95	65	71	69	31	21	27	31	
Lodgepole	16	36.6	6735	118.7	84	57	80	56	80	56	78	54	60	58	26	-4	1	7	
Lodi	12	38.1	40	121.3	101	70	97	68	95	68	91	67	72	70	38	23	28	31	2859
Loma Linda	10	34	1150	117.5	106	70	103	69	102	69	99	67	74	72	36	27	32	35	
Lomita	6	33.8	56	119	95	69	87	68	85	68	81	66	71	69	18	33	38	40	
Lompoc	5	34.9	95	120.5	84	63	77	62	76	62	72	60	65	63	18	26	31	34	2888
Long Beach	6	33.7	34	118.2	97	70	88	68	86	67	82	65	65	63	18	35	31	34	
Long Beach AP	8	33.8	25	118.2	99	71	90	69	88	68	84	66	73	71	21	33	38	41	1606
Loomis	11	38.8	408	121.2	107	71	103	70	102	70	98	69	74	72	39	21	27	30	
Los Alamitos NAS	8	33.8	30	118.1	98	71	89	69	87	69	83	68	73	71	23	32	37	39	1740
Los Altos	4	37.3	163	122	96	68	88	65	86	64	80	62	70	68	26	28	33	35	
Los Altos Hills	4	37.3	183	122.1	93	67	85	64	83	64	77	63	68	66	25	28	33	35	1103
Los Angeles AP	6	33.9	97	118.4	91	67	84	67	83	67	79	66	71	69	14	37	40	42	1819
Los Angeles CO	9	34	270	118.2	99	69	92	68	90	68	86	67	72	70	21	38	41	43	1245
Los Banos	12	37	120	120.9	100	70	96	68	94	68	88	67	72	70	42	22	28	31	2616
Los Banos Res	12	37	407	120.9	101	70	97	68	95	68	89	67	72	70	42	23	29	31	
Los Gatos	4	37.2	365	122	98	69	90	67	88	67	82	66	71	69	32	26	31	34	2741
Los Serranos	10	34.1	714	117.7	104	70	100	69	98	69	94	68	74	72	35	27	32	35	706
Lucas Vly-Marinwood	2	38.3	20	122.6	79	63	74	62	71	61	65	59	64	62	12	30	35	37	874
Lucerne Valley	14	34.5	2957	117	105	67	101	66	100	66	98	64	71	69	38	12	19	24	

City	Climate Zone	Latitude	Elevation (ft)	Longitude	Cooling 0.10% DB	Cooling 0.10% MCWB	Cooling 0.50% DB	Cooling 0.50% MCWB	Cooling 1.00% DB	Cooling 1.00% MCWB	Cooling 2.00% DB	Cooling 2.00% MCWB	Design Wetbulb 0.1%	Design Wetbulb 0.5%	Outdoor Daily Range	Heating Winter Median of Extremes	Heating Design Drybulb (0.2%)	Heating Design Drybulb (0.6%)	HDD*
Lynwood	8	33.9	88	118	98	70	90	69	88	69	83	67	72	70	21	32	37	39	
Madera	13	37	268	120.1	105	72	101	70	100	70	96	68	74	72	40	24	29	32	2673
Madera Acres	13	36.9	275	120.1	105	72	101	70	100	70	96	68	74	72	40	24	29	32	1250
Manhattan Beach	6	33.9	120	118	91	69	84	68	83	68	79	66	71	69	12	38	42	45	
Manteca	12	37.8	34	121.2	102	70	97	68	95	68	91	67	72	70	37	24	29	32	
Manzanita Lake	11	40.5	5850	121.6	87	58	84	57	83	57	79	55	61	59	34	-3	2	8	7617
March AFB	10	33.9	1511	117.3	103	70	99	68	98	67	94	65	74	71	34	23	30	33	2089
Maricopa	13	35.1	675	119.4	106	71	102	70	101	70	98	68	74	72	29	25	30	33	2302
Marina	3	36.7	20	121.8	86	66	77	63	75	63	70	61	67	64	18	32	37	40	
Marina del Rey	6	34.1	40	118.5	91	69	84	68	83	68	79	66	71	69	12	38	42	45	383
Markley Cove	2	38.5	480	122.1	104	70	99	69	97	69	93	67	72	70	39	23	29	31	
Martinez FS	12	38	40	122.1	99	67	94	66	92	66	88	65	71	69	36	28	33	35	
Marysville	11	39.2	60	121.6	105	72	102	70	101	70	97	68	74	72	36	27	32	35	2552
Mather AFB	12	38.6	96	121.3	104	71	100	70	98	70	94	68	73	71	35	28	33	35	
Maywood	8	34	170	118	97	70	91	69	89	69	85	67	72	70	21	34	38	41	
McClellan AFB	12	38.7	86	121.4	105	71	102	70	100	70	96	68	74	71	35	23	28	21	2566
McCloud	16	41.3	3300	122.1	96	63	93	62	91	62	87	60	66	64	42	5	13	18	5990
McFarland	13	35.6	350	119.2	106	71	102	70	101	70	98	69	74	72	36	22	25	28	1162
McKinleyville	1	40.9	33	124.1	75	61	69	59	68	59	65	58	61	60	11	28	31	33	1995
Mecca FS	15	33.6	-180	116.1	115	75	111	75	110	75	107	74	81	79	30	24	29	32	1185
Mendota	13	36.7	169	120.4	105	73	101	71	100	70	97	68	75	73	34	24	28	30	1273
Menlo Park	3	37.4	65	122.3	94	67	86	65	84	65	78	63	69	67	25	27	32	34	
Mentone	10	34.1	1700	117.1	106	70	102	69	101	69	98	67	74	72	34	27	32	35	741
Merced AP	12	37.3	153	120.6	103	71	100	69	99	69	95	67	73	71	36	21	27	30	2653
Mill Creek	16	35.1	2940	117	102	67	97	66	96	66	94	65	70	68	28	28	33	36	

City	Climate Zone	Latitude	Elevation (ft)	Longitude	Cooling 0.10% DB	Cooling 0.10% MCWB	Cooling 0.50% DB	Cooling 0.50% MCWB	Cooling 1.00% DB	Cooling 1.00% MCWB	Cooling 2.00% DB	Cooling 2.00% MCWB	Design Wetbulb 0.1%	Design Wetbulb 0.5%	Outdoor Daily Range	Heating Winter Median of Extremes	Heating Design Drybulb (0.2%)	Heating Design Drybulb (0.6%)	HDD*
Mill Valley	3	37.9	80	122.6	97	68	91	66	89	66	84	64	70	68	28	28	33	35	3400
Millbrae	3	37.6	10	122.4	90	66	82	63	80	63	74	61	67	65	24	30	35	37	
Milpitas	4	37.4	15	121.9	94	68	87	65	85	65	79	63	70	67	27	27	32	35	
Mineral	16	40.4	4911	121.6	90	60	87	59	86	59	82	57	63	61	38	2	7	14	7257
Mira Loma	10	34	700	117.5	105	70	101	69	99	68	95	66	74	72	34	25	33	36	600
Miramar AFS	7	32.9	477	117.1	97	69	91	68	90	68	86	67	72	70	22	32	36	38	1532
Miramonte	13	34.4	750	119.1	102	71	97	69	95	69	91	68	73	71	38	25	29	32	771
Mission Viejo	8	33.6	350	118	95	67	87	66	85	65	81	63	71	67	22	33	37	40	
Mitchell Caverns	14	34.9	4350	117.0	102	64	98	63	97	63	94	61	69	67	29	21	27	30	
Modesto	12	37.6	91	121	102	73	99	70	98	70	95	68	75	72	36	25	30	33	2671
Moffett Field NAS	4	37.4	39	122.1	89	68	84	66	82	66	78	64	70	68	23	30	34	36	2511
Mojave	14	35.1	2735	118.2	106	68	102	67	101	67	98	66	71	69	35	16	22	26	3012
Mono Lake	16	38	6450	119.2	91	58	88	57	87	57	84	55	62	60	32	4	12	17	6518
Monrovia	9	34.2	562	118.3	100	69	96	68	94	68	90	67	73	71	30	33	38	41	
Montague	16	41.8	2648	122.5	99	66	95	65	94	65	90	63	69	67	39	3	11	16	5474
Montclair	10	34	1220	117	104	69	100	68	98	68	94	66	73	71	35	28	33	35	
Montebello	9	34	205	118.1	98	69	93	68	91	68	86	67	72	70	24	33	37	39	
Monterey AP	3	36.6	245	121.9	86	65	77	62	75	62	70	61	66	63	20	30	35	38	3556
Monterey CO	3	36.6	345	121.9	87	65	78	62	76	62	71	61	66	63	20	32	37	40	3169
Monterey Park	9	34	380	118	99	69	94	68	92	68	87	67	72	70	23	30	35	37	
Monticello Dam	2	38.5	505	122.1	105	71	100	70	98	70	94	68	73	71	39	26	31	34	
Moraga	12	37.8	600	122.2	99	68	93	66	91	66	86	64	70	68	27	21	26	29	
Moreno Valley	10	33.9	1600	117.2	103	70	99	68	98	67	94	65	74	71	34	27	30	33	611
Morgan Hill	4	37.1	350	120	100	69	92	68	90	68	85	66	71	69	25	26	31	34	
Morro Bay FD	5	35.4	115	120.9	88	65	82	64	80	64	76	62	67	65	14	31	36	38	

City	Climate Zone	Latitude	Elevation (ft)	Longitude	Cooling 0.10% DB	Cooling 0.10% MCWB	Cooling 0.50% DB	Cooling 0.50% MCWB	Cooling 1.00% DB	Cooling 1.00% MCWB	Cooling 2.00% DB	Cooling 2.00% MCWB	Design Wetbulb 0.1%	Design Wetbulb 0.5%	Outdoor Daily Range	Heating Winter Median of Extremes	Heating Design Drybulb (0.2%)	Heating Design Drybulb (0.6%)	HDD*
Mount Baldy Notch	16	34.3	7735	117.6	80	58	76	57	75	56	71	54	61	59	32	4	10	14	
Mount Diablo	12	37.9	2100	121.9	101	68	96	66	93	66	87	65	68	59	28	27	32	35	4600
Mount Hamilton	4	37.3	4206	121.7	95	59	88	58	86	58	81	56	63	61	18	18	24	27	4724
Mount Hebron RS	16	41.8	4250	122	92	60	88	59	86	59	82	57	63	61	42	-10	-4	0	
Mount San Jacinto	16	33.8	8417	116.6	82	56	77	55	76	55	73	53	61	59	35	-1	4	11	
Mount Shasta	16	41.3	3535	122.3	93	62	89	61	88	61	84	59	65	63	34	8	15	20	5890
Mount Wilson	16	34.2	5709	118.1	90	63	85	61	83	60	79	58	66	64	21	15	22	26	4296
Mountain Pass	14	35.5	4730	115.5	100	65	96	64	95	64	92	63	68	66	29	11	18	23	
Mountain View	4	37.5	95	121.9	93	67	85	64	83	64	77	62	68	66	25	28	33	35	
Muscoy	10	34.2	1400	117.3	105	71	101	69	100	68	96	66	75	72	37	26	31	34	614
Nacimiento Dam	4	35.8	770	120.9	100	68	94	66	92	66	88	64	70	68	35	22	28	31	
Napa State Hospital	2	37.3	60	122.3	94	67	91	67	90	67	86	66	71	70	29	26	31	34	2749
National City	7	32.7	34	117	87	70	82	68	81	68	78	66	71	69	10	36	40	42	
Needles AP	15	34.8	913	114.6	117	73	114	72	113	72	110	71	77	75	26	27	32	35	1391
Nevada City	11	39.3	2600	121	97	66	94	64	92	64	88	63	68	66	41	14	21	25	4900
Newark	3	37.5	10	122	94	68	89	67	87	67	82	65	70	68	24	29	34	36	
Newhall Soledad	9	34.4	1243	118.6	104	70	100	68	99	68	95	67	73	71	42	27	33	36	
Newman	12	37.3	90	121.1	104	71	99	69	97	69	93	67	73	71	38	22	28	31	
Newport Beach	6	33.6	10	117.9	87	68	80	66	78	66	72	65	70	68	12	34	39	41	1952
Nipomo	5	35	330	120.5	90	66	83	64	82	63	78	61	67	65	23	25	31	33	1035
Norco	10	33.9	700	117	103	70	99	69	98	69	94	67	74	72	34	27	32	35	
North Auburn	11	38.9	1300	121.1	103	69	100	67	99	67	95	66	72	69	33	25	30	33	1518
North Fork RS	16	37.2	2630	119.5	98	66	95	65	94	64	92	62	69	67	36	15	22	26	
North Highlands	12	38.6	45	121.4	104	71	100	69	98	69	94	67	73	71	35	23	28	31	2566
North Hollywood	9	34.2	619	118.4	102	70	97	69	95	69	91	67	73	71	31	28	33	36	

City	Climate Zone	Latitude	Elevation (ft)	Longitude	Cooling 0.10% DB	Cooling 0.10% MCWB	Cooling 0.50% DB	Cooling 0.50% MCWB	Cooling 1.00% DB	Cooling 1.00% MCWB	Cooling 2.00% DB	Cooling 2.00% MCWB	Design Wetbulb 0.1%	Design Wetbulb 0.5%	Outdoor Daily Range	Winter Median of Extremes	Heating Design Drybulb (0.2%)	Heating Design Drybulb (0.6%)	HDD*
Northridge	9	34.2	875	118.5	101	70	96	69	94	69	90	67	73	71	36	30	35	38	650
Norwalk	8	33.9	97	118.1	99	69	90	68	88	68	84	67	72	70	26	31	35	37	
Novato	2	38.1	370	122.5	94	64	87	63	85	63	80	61	68	66	30	25	30	32	
Oakdale	12	37.8	215	120.9	102	71	99	69	97	69	93	67	73	71	37	22	28	32	
Oakland AP	3	37.7	6	122.2	91	66	84	64	82	64	77	62	67	65	20	32	34	37	2909
Oakland Museum	3	37.8	30	122.2	96	68	89	66	87	65	82	63	69	67	20	31	33	36	
Oakley	12	38	20	121.7	102	70	97	68	95	68	91	66	70	69	34	22	28	31	
Oceano	5	35.1	20	120.6	93	69	86	64	84	64	80	62	67	65	18	30	34	37	795
Oceanside	7	33.2	10	117.4	84	69	80	67	78	67	74	65	70	68	10	33	37	39	
Oildale	13	35.5	450	119	106	71	102	70	101	70	98	68	74	72	34	26	31	35	
Ojai	16	34.5	750	119.3	102	71	97	69	95	69	91	68	73	71	38	25	29	32	2145
Olivehurst	11	39	64	121.6	105	72	102	70	101	70	97	68	74	72	36	27	32	35	1160
Ontario AP	10	34	934	117	105	70	101	69	99	68	95	66	74	72	34	26	33	36	1710
Opal Cliffs	3	37	125	122	94	68	88	66	86	66	81	64	69	67	28	27	32	35	1097
Orange	8	33.6	194	118	99	70	92	68	90	68	85	67	72	70	27	33	37	40	
Orange Cove	13	36.6	431	119.3	104	71	100	69	99	69	97	68	73	71	38	25	30	33	2684
Orangevale	12	38.7	140	121.2	105	72	102	70	100	70	96	68	74	71	36	24	30	34	
Orick Prairie Creek	1	41.4	161	124	80	61	75	60	74	60	70	59	63	61	23	25	30	33	4816
Orinda	12	37.9	550	122.2	99	68	93	66	91	66	86	64	70	68	32	21	26	29	
Orland	11	39.8	254	122.2	105	71	102	70	101	70	97	68	73	71	36	22	28	31	2824
Orleans	2	41.3	403	123.5	104	70	97	68	95	68	91	66	71	69	42	21	27	30	3628
Orosi	13	36.5	400	119.3	104	73	101	70	100	70	96	69	75	73	36	24	30	34	1130
Oroville East	11	39.5	171	121.6	106	71	104	70	102	70	98	69	74	72	37	25	30	33	1385
Oroville RS	11	39.5	300	121.6	106	71	104	70	102	70	98	69	74	72	37	25	30	33	
Otay-Castle Pk	7	32.6	500	117	87	68	81	66	79	65	74	63	69	67	10	33	38	40	

City	Climate Zone	Latitude	Elevation (ft)	Longitude	Cooling 0.10% DB	Cooling 0.10% MCWB	Cooling 0.50% DB	Cooling 0.50% MCWB	Cooling 1.00% DB	Cooling 1.00% MCWB	Cooling 2.00% DB	Cooling 2.00% MCWB	Design Wetbulb 0.1%	Design Wetbulb 0.5%	Outdoor Daily Range	Winter Median of Extremes	Heating Design Drybulb (0.2%)	Heating Design Drybulb (0.6%)	HDD*
Oxnard AFB	6	34.2	49	119.2	94	69	86	68	84	68	79	67	71	69	21	30	34	37	2068
Pacific Grove	3	36.7	114	122	87	66	78	63	76	63	71	61	67	64	19	31	35	37	
Pacifica	3	37.6	13	122	87	65	79	62	77	62	71	60	66	64	16	31	35	37	
Pacoima	9	34.3	895	118.4	104	71	99	70	98	70	94	68	74	72	35	29	34	37	664
Palermo	11	39.4	154	121.5	106	71	104	70	102	70	98	69	74	72	37	25	30	33	1170
Palm Desert	15	33.7	200	116.5	116	74	112	73	111	73	108	72	79	78	34	26	32	34	
Palm Desert Country	15	33.7	243	116.3	116	74	112	73	111	73	108	72	79	78	34	26	32	34	374
Palm Springs	15	33.8	411	116.5	117	74	113	73	112	73	109	72	79	78	35	26	31	34	1109
Palmdale AP	14	34.6	2517	118.1	107	67	103	67	102	66	98	64	71	69	33	12	20	24	2929
Palmdale CO	14	34.6	2596	118.1	106	67	102	67	101	66	97	64	71	69	35	13	21	25	2908
Palo Alto	4	37.5	25	122.1	93	66	85	64	83	64	77	62	68	66	25	26	31	34	2891
Palomar Obsy	14	33.4	5545	116.9	90	62	85	61	84	61	80	59	66	64	22	16	20	23	4141
Palos Verdes	6	33.8	216	119	92	69	84	68	82	68	78	66	71	69	14	38	43	46	
Panorama City	9	34.2	801	118.5	103	71	98	69	96	69	92	67	74	71	32	28	33	36	664
Paradise	11	39.8	1750	121.6	102	69	99	67	98	67	94	66	71	69	34	25	30	33	
Paramount	8	33.9	70	117	98	70	90	69	88	69	84	67	72	70	22	32	37	40	
Parker Res	15	34.3	738	114.2	115	74	112	73	111	73	108	72	79	77	26	32	37	40	1223
Parkway-South Sacramento	12	38.5	17	121.4	104	71	100	70	98	70	94	68	73	71	32	30	35	37	1150
Parlier	13	36.6	320	119.5	104	73	101	71	100	70	97	68	75	73	38	24	30	34	1262
Pasadena	9	34.2	864	118.2	99	69	94	68	92	68	88	67	73	71	30	32	37	40	1551
Paso Robles AP	4	35.7	815	120.7	104	66	97	66	96	66	92	65	70	68	40	19	23	26	2973
Paso Robles CO	4	35.6	700	120.7	102	65	95	65	94	65	90	65	69	67	44	16	20	23	2885
Patterson	12	37.4	97	121.1	101	72	96	70	94	69	90	67	74	72	36	24	30	34	1240
Pedley	10	34	718	117.5	105	70	101	69	99	68	95	66	74	72	34	26	33	36	600

City	Climate Zone	Latitude	Elevation (ft)	Longitude	Cooling 0.10% DB	Cooling 0.10% MCWB	Cooling 0.50% DB	Cooling 0.50% MCWB	Cooling 1.00% DB	Cooling 1.00% MCWB	Cooling 2.00% DB	Cooling 2.00% MCWB	Design Wetbulb 0.1%	Design Wetbulb 0.5%	Outdoor Daily Range	Heating Winter Median of Extremes	Heating Design Drybulb (0.2%)	Heating Design Drybulb (0.6%)	HDD*
Pendleton MCB	7	33.3	63	117.3	92	68	87	67	85	67	81	66	71	69	22	34	39	41	1532
Pendleton MCB Coast	7	33.2	24	117.4	84	69	80	67	79	67	75	65	70	68	10	39	44	46	1782
Perris	10	33.8	1470	117.2	105	70	101	69	100	69	97	68	74	72	39	22	27	30	
Petaluma FS 2	2	38.2	16	122.6	98	69	92	67	90	67	85	66	72	69	31	24	29	32	2959
Pico Rivera	9	34	180	118	98	70	91	69	89	69	85	67	72	70	24	31	35	38	
Piedmont	3	37.8	325	122	96	68	89	66	87	65	82	63	70	68	23	31	33	36	
Pinnacles NM	4	36.5	1307	121.2	98	68	94	67	93	66	89	64	70	68	45	20	26	29	2956
Pinole	3	38	10	122.3	91	66	87	65	86	65	82	64	69	67	25	30	35	38	
Pismo Beach	5	35.1	80	120.6	92	66	85	64	84	64	80	62	67	65	16	30	34	37	2756
Pittsburg	12	38	50	121.8	102	70	97	68	95	68	90	67	72	70	34	26	32	35	
Placentia	8	33.9	323	118	101	69	93	68	91	68	87	67	73	71	28	30	34	37	
Placerville	12	38.7	1890	120.8	101	67	98	66	97	66	93	65	70	68	42	20	26	29	4086
Placerville IFG	12	38.7	2755	120.8	100	66	97	65	96	65	92	64	69	67	42	23	28	31	
Platina	11	40.4	2260	122.9	96	65	92	64	91	63	87	61	67	65	36	13	20	24	
Pleasant Hill	12	37.9	102	122	96	68	93	67	92	67	88	65	70	68	34	25	30	33	
Pleasanton	12	37.6	350	121.8	97	68	94	67	93	67	89	65	70	68	35	24	29	32	
Point Arena	1	38.9	100	123.7	76	62	72	60	71	60	67	58	63	61	19	29	32	34	4747
Point Arguello	5	34.6	76	120.7	75	64	71	63	69	62	65	59	65	63	17	29	32	35	3826
Point Mugu	6	34.1	14	119.1	88	68	81	67	79	67	75	66	70	68	15	33	37	39	2328
Point Piedras Blancas	5	35.7	59	121.3	73	60	67	59	65	59	61	57	62	60	10	36	41	43	3841
Pomona Cal Poly	9	34.1	740	117.8	102	70	98	69	97	69	93	67	74	72	36	27	32	35	1971
Port Chicago ND	12	38	50	122	98	69	94	68	92	68	88	66	71	69	34	28	33	36	
Port Hueneme	6	34.2	13	119	88	68	81	67	79	67	75	66	70	68	15	33	37	39	2334
Porterville	13	36.1	393	119	106	71	102	70	101	70	97	69	74	72	36	25	30	33	2456
Portola	16	39.8	4850	120.5	92	63	89	61	88	61	84	59	65	63	48	-9	-3	1	7111

City	Climate Zone	Latitude	Elevation (ft)	Longitude	Cooling 0.10% DB	Cooling 0.10% MCWB	Cooling 0.50% DB	Cooling 0.50% MCWB	Cooling 1.00% DB	Cooling 1.00% MCWB	Cooling 2.00% DB	Cooling 2.00% MCWB	Design Wetbulb 0.1%	Design Wetbulb 0.5%	Outdoor Daily Range	Winter Median of Extremes	Heating Design Drybulb (0.2%)	Heating Design Drybulb (0.6%)	HDD*
Posey 3 E	16	35.8	4960	119	89	62	86	61	85	61	82	59	65	63	26	9	16	21	
Potter Valley PH	2	39.4	1015	123.1	101	68	96	67	94	67	89	65	70	68	40	20	26	29	3276
Poway Valley	10	33	500	117	100	70	94	69	93	69	89	68	73	71	26	29	33	35	
Priest Valley	4	36.2	2300	120.7	97	66	93	65	92	65	88	63	69	67	34	13	20	24	4144
Prunedale	3	36.6	260	121.7	86	66	83	65	82	64	79	62	68	66	20	26	31	34	1100
Quartz Hill	14	34.6	2428	118.2	106	68	102	67	101	67	98	66	72	70	35	12	17	20	1455
Quincy	16	39.9	3409	120.9	101	64	98	63	97	63	93	62	68	66	45	1	6	13	5763
Ramona Spaulding	10	33.1	1480	116.8	103	70	97	69	96	69	92	68	73	71	40	22	28	31	
Rancho Bernardo	10	33	500	117.1	96	69	91	68	89	68	85	67	72	70	26	29	34	36	
Rancho Cordova	12	38.6	190	121.3	104	72	100	69	98	69	94	68	74	71	35	26	31	33	
Rancho Mirage	15	33.8	248	116.4	117	74	113	73	112	73	109	72	79	78	33	26	31	34	374
Rancho Palos Verdes	6	33.7	216	118.2	92	69	84	68	82	68	78	66	71	69	14	38	43	46	
Rancho San Diego	10	32.8	300	117.0	94	69	86	68	85	68	82	66	71	69	30	34	38	41	404
Rancho Santa Margarita	8	33.6	116	117.6	95	67	87	66	85	65	81	63	71	67	22	33	37	40	496
Randsburg	14	35.3	3570	117.7	105	67	102	66	101	66	97	65	70	68	30	19	25	28	2922
Red Bluff AP	11	40.2	342	122.3	107	70	104	69	102	68	98	66	73	71	31	24	29	31	2688
Redding FS 4	11	40.6	470	122.4	107	69	103	68	101	68	97	67	72	70	30	26	31	34	2544
Redlands	10	34.1	1318	117.2	106	70	102	69	101	69	98	67	74	72	34	27	32	35	1993
Redondo Beach	6	33.8	45	118.3	92	69	84	68	82	68	78	66	71	69	12	37	42	44	
Redwood City	3	37.5	31	122.2	90	67	86	66	85	66	81	64	69	67	28	28	33	35	2599
Reedley	13	36.6	344	119.7	104	71	101	70	100	70	96	68	74	72	40	24	30	34	
Reseda	9	34.2	736	118.5	103	71	98	69	96	69	92	67	74	71	32	28	33	36	664
Rialto	10	34.1	1254	117	105	70	101	69	100	68	96	66	74	72	35	28	33	35	
Richardson Grove	2	40	500	123.8	96	67	92	66	91	66	87	64	69	67	28	25	30	33	

City	Climate Zone	Latitude	Elevation (ft)	Longitude	Cooling 0.10% DB	Cooling 0.10% MCWB	Cooling 0.50% DB	Cooling 0.50% MCWB	Cooling 1.00% DB	Cooling 1.00% MCWB	Cooling 2.00% DB	Cooling 2.00% MCWB	Design Wetbulb 0.1%	Design Wetbulb 0.5%	Outdoor Daily Range	Winter Median of Extremes	Heating Design Drybulb (0.2%)	Heating Design Drybulb (0.6%)	HDD*
Richmond	3	37.9	55	121.6	88	65	84	64	82	64	77	62	67	65	17	31	36	38	2684
Ridgecrest	14	35.6	2340	117.8	110	70	106	68	105	68	102	66	75	71	35	15	22	26	
Rio Del Mar	3	37	50	121.9	94	67	88	66	87	65	83	63	69	67	30	27	32	35	1097
Rio Linda	12	38.6	86	121.5	104	72	100	70	98	70	94	68	74	71	32	28	33	35	1290
Ripon	12	37.7	61	121.1	102	70	97	68	95	68	91	67	72	70	37	23	30	33	1240
Riverbank	12	37.7	133	120.9	102	73	99	70	98	70	95	68	75	72	36	25	30	33	1240
Riverside Exp Sta	10	34	986	117.4	106	71	102	69	101	69	97	67	75	72	36	29	34	36	
Riverside FS 3	10	34	840	117.4	104	70	100	69	99	68	95	65	74	72	37	27	32	35	1818
Rocklin	11	38.8	239	121.2	108	72	104	70	103	70	99	69	74	72	39	20	26	29	3143
Rodeo	3	38.1	15	122.3	93	67	90	66	88	66	84	64	70	68	23	28	33	36	823
Rohnert Park	2	38.4	106	122.6	99	69	96	68	95	68	92	66	71	69	33	24	27	29	
Rolling Hills	6	33.6	216	119	92	69	84	68	82	68	78	66	71	69	15	38	43	46	
Rosamond	14	34.8	2326	118.2	106	68	102	67	101	67	98	66	71	69	35	16	22	26	1455
Roseland	2	38.4	167	122.7	99	69	96	68	95	68	92	66	71	69	35	24	27	29	1249
Rosemead	9	34	275	118	98	70	90	69	88	69	84	67	72	70	27	30	35	37	
Rosemont	12	38.3	190	121.4	104	71	100	70	98	70	94	68	73	71	32	30	35	37	1025
Roseville	11	38.7	160	121.2	105	71	102	70	100	70	96	68	74	71	36	24	30	34	
Rossmoor	8	33.8	20	118.1	92	67	85	64	83	64	79	62	71	69	19	32	37	39	
Rowland Hts	9	33.9	540	118	99	70	93	69	91	69	86	68	73	71	27	29	34	36	
Rubidoux	10	34	792	117	106	71	102	70	101	70	97	68	75	73	36	27	32	35	
Sacramento AP	12	38.5	17	121.5	104	72	100	70	98	70	94	68	74	71	35	26	31	33	2843
Sacramento CO	12	38.6	84	121.5	104	71	100	70	98	70	94	68	73	71	32	30	35	37	
Saint Helena	2	38.5	225	122.5	102	70	98	69	97	69	93	67	72	70	40	22	28	31	2878
Saint Mary's College	12	37.8	623	122.1	98	69	93	68	91	68	86	66	71	69	28	21	27	30	3543
Salinas 3 E	3	36.7	85	121.6	86	66	83	65	82	64	79	62	68	66	20	26	31	34	

City	Climate Zone	Latitude	Elevation (ft)	Longitude	Cooling 0.10% DB	Cooling 0.10% MCWB	Cooling 0.50% DB	Cooling 0.50% MCWB	Cooling 1.00% DB	Cooling 1.00% MCWB	Cooling 2.00% DB	Cooling 2.00% MCWB	Design Wetbulb 0.1%	Design Wetbulb 0.5%	Outdoor Daily Range	Winter Median of Extremes	Heating Design Drybulb (0.2%)	Heating Design Drybulb (0.6%)	HDD*
Salinas AP	3	36.7	69	121.6	85	67	82	65	81	64	78	62	69	66	20	28	33	35	2959
Salt Springs PH	16	38.5	3700	120.2	95	62	92	61	91	61	87	59	66	64	27	19	25	28	3857
Salyer RS	16	40.9	623	123.6	102	69	95	67	93	66	87	64	70	68	33	22	28	31	
San Anselmo	2	38	50	122	95	67	89	66	87	66	82	65	70	68	32	26	31	33	
San Antonio Canyon	10	34.2	2394	117.7	100	68	96	67	94	67	90	65	72	70	33	29	35	39	
San Antonio Mission	4	36	1060	117.7	99	69	94	68	92	68	88	67	71	69	28	19	25	28	
San Bernardino	10	34.1	1125	117.3	106	70	102	69	101	69	98	68	75	72	39	27	31	33	1777
San Bruno	3	37.7	20	122.4	86	66	80	64	78	64	73	62	67	65	23	30	35	38	3042
San Carlos	3	37.5	26	122.3	92	67	88	65	86	65	82	63	68	66	28	28	33	35	
San Clemente	6	33.4	208	118.6	91	68	85	67	84	67	80	66	71	69	12	31	35	37	
San Diego AP	7	32.7	13	117.2	88	70	83	69	82	69	78	68	72	70	13	38	42	44	1507
San Dimas	9	34	955	118.4	102	70	98	69	96	69	92	67	74	72	35	30	35	37	
San Fernando	9	34.3	977	118.5	104	71	99	70	98	70	94	68	74	72	37	30	35	37	1800
San Francisco AP	3	37.6	8	122.4	89	66	83	64	80	63	74	61	67	64	20	31	35	38	3042
San Francisco CO	3	37.8	52	122.4	84	65	79	63	77	62	71	60	66	63	14	38	41	44	3080
San Gabriel FD	9	34.1	450	118.1	99	70	94	69	92	69	88	68	73	71	30	30	35	37	1532
San Gregorio 2 SE	3	37.3	275	122.4	87	66	81	63	79	63	74	61	68	65	30	27	32	35	
San Jacinto	10	33.8	1535	117	110	70	105	69	104	69	102	68	75	73	41	20	26	29	2376
San Jose	4	37.4	67	121.9	94	68	86	66	84	66	78	64	70	68	26	29	34	36	2438
San Leandro	3	37.7	45	122.2	89	67	83	64	81	64	76	62	69	66	22	28	33	35	
San Lorenzo	3	37.7	45	122.1	89	67	83	64	81	64	76	62	69	66	23	28	33	36	
San Luis Dam	12	37.1	277	121.1	97	68	91	66	90	66	86	64	70	68	32	25	30	33	
San Luis Obispo	5	35.3	320	120.7	94	63	87	63	85	63	81	62	67	65	26	30	33	35	2498
San Marcos	10	33.1	567	117.2	97	69	98	68	94	68	84	67	72	70	29	26	31	34	662
San Marino	9	34.2	300	118.1	100	69	95	68	93	68	88	66	73	71	28	30	35	37	

City	Climate Zone	Latitude	Elevation (ft)	Longitude	Cooling 0.10% DB	Cooling 0.10% MCWB	Cooling 0.50% DB	Cooling 0.50% MCWB	Cooling 1.00% DB	Cooling 1.00% MCWB	Cooling 2.00% DB	Cooling 2.00% MCWB	Design Wetbulb 0.1%	Design Wetbulb 0.5%	Outdoor Daily Range	Winter Median of Extremes	Heating Design Drybulb (0.2%)	Heating Design Drybulb (0.6%)	HDD*
San Mateo	3	37.5	21	122.3	92	67	84	65	82	65	76	63	68	66	24	31	36	38	2655
San Nicholas Island	6	33.2	504	119.5	85	66	78	65	76	65	70	64	69	67	11	39	43	45	2454
San Pablo	3	37.6	30	122.3	90	65	84	63	82	63	77	61	69	66	17	29	34	37	
San Pedro	6	33.7	10	118.3	92	69	84	68	82	68	78	66	72	70	13	35	31	34	1819
San Rafael	2	38	40	122.6	96	67	90	65	88	65	83	63	71	68	29	30	35	37	2440
San Ramon	12	37.7	360	122	99	69	93	67	91	67	86	65	70	68	35	24	29	32	1369
Sandberg	16	34.8	4517	118.7	95	63	91	61	90	61	87	59	67	65	32	17	21	24	4427
Sanger	13	36.7	364	119.6	105	72	101	70	100	70	96	68	74	72	37	24	30	34	
Santa Ana FS	8	33.8	115	117.8	98	70	91	68	89	68	84	67	72	70	26	33	35	38	1430
Santa Barbara AP	6	34.4	9	119.8	90	69	83	67	81	67	77	65	70	68	20	29	34	36	2487
Santa Barbara CO	6	34.4	5	119.7	91	69	84	67	82	67	78	65	70	68	22	33	38	40	1994
Santa Clara Univ	4	37.4	88	121.9	90	67	87	65	86	65	82	63	69	67	30	29	34	36	2566
Santa Clarita	9	34.4	1300	118.5	103	71	98	70	97	70	93	68	74	72	36	30	35	37	
Santa Cruz	3	37	125	122	94	68	88	66	86	66	81	64	69	67	28	27	32	35	3136
Santa Fe Springs	9	33.9	280	118.1	99	69	90	68	88	68	84	67	72	70	24	31	36	38	
Santa Maria AP	5	34.9	236	120.5	90	66	83	64	82	63	78	61	67	65	23	25	31	33	3053
Santa Monica	6	34	15	118.5	85	67	78	66	76	66	72	64	69	67	15	39	44	46	1873
Santa Paula	9	34.4	263	119.1	101	71	94	70	92	70	87	68	73	71	28	28	33	35	2030
Santa Rosa	2	38.5	167	122.8	99	69	96	68	95	68	92	66	71	69	35	24	27	29	2980
Santee	10	32.8	400	117	96	69	91	68	90	68	87	67	72	70	20	25	30	33	
Saratoga	4	37.3	500	122	96	67	88	66	86	66	80	65	70	68	31	27	32	35	
Sausalito	3	37.9	10	122.5	85	66	80	65	78	65	73	63	67	65	12	30	34	36	
Sawyer's Bar RS	16	41.3	2169	123.1	100	66	95	65	93	64	88	62	68	66	38	14	21	25	4102
Scotia	1	40.5	139	124.4	78	61	74	60	73	60	69	58	63	61	19	28	33	35	3954
Scotts Valley	3	37	400	122	94	68	88	66	86	66	81	64	69	67	28	27	32	35	1097

City	Climate Zone	Latitude	Elevation (ft)	Longitude	Cooling 0.10% DB	Cooling 0.10% MCWB	Cooling 0.50% DB	Cooling 0.50% MCWB	Cooling 1.00% DB	Cooling 1.00% MCWB	Cooling 2.00% DB	Cooling 2.00% MCWB	Design Wetbulb 0.1%	Design Wetbulb 0.5%	Outdoor Daily Range	Heating Winter Median of Extremes	Heating Design Drybulb (0.2%)	Heating Design Drybulb (0.6%)	HDD*
Seal Beach	6	33.8	21	118.1	94	69	86	68	84	67	80	65	71	69	15	35	40	42	1519
Seaside	3	36.6	17	122.9	85	66	79	64	77	64	73	62	67	65	20	30	35	37	
Sebastapol	2	38.4	102	122.8	99	69	96	68	95	68	92	66	71	69	35	24	27	29	1249
Selma	13	36.6	305	119.6	104	73	101	71	100	70	97	68	75	73	38	24	30	34	
Sepulveda	9	34.2	818	118.5	103	71	98	69	96	69	92	67	74	71	32	28	33	36	664
Shafter	13	35.5	345	119.2	106	71	102	70	101	70	98	68	74	72	28	24	29	32	2185
Shasta Dam	11	40.7	1076	122.4	105	69	101	68	99	68	95	67	72	70	27	29	34	36	2943
Shelter Cove	1	40	110	124.1	80	61	73	60	72	59	68	57	63	61	15	34	39	41	
Sherman Oaks	9	34.2	657	118.5	103	71	98	69	96	69	92	67	74	71	28	29	34	37	664
Sierra City	16	39.6	4230	120.1	96	62	93	61	92	61	89	59	66	64	43	12	19	24	
Sierra Madre	9	34.2	1153	118.1	102	69	96	68	94	68	90	67	73	71	27	32	37	39	
Sierraville RS	16	39.6	4975	120.4	94	60	91	59	90	59	86	57	64	62	44	-10	-4	0	6893
Signal Hill	6	33.5	100	118.2	99	70	90	69	88	68	84	66	72	70	19	35	39	42	
Simi Valley	9	34.4	500	118.8	98	70	93	68	91	68	87	66	73	71	30	28	33	35	
Solana Beach	7	33	15	117.3	87	68	83	67	81	67	77	65	70	68	10	35	39	41	
Soledad	3	36.4	200	121.3	90	67	87	65	86	65	82	64	70	67	23	24	29	32	1020
Sonoma	2	38.3	70	122.5	101	70	96	69	94	69	90	67	72	70	40	22	28	31	2998
Sonora RS	12	38	1749	120.4	103	68	100	67	99	67	95	66	72	70	34	20	26	29	3537
Soquel	3	37	50	122	94	67	88	66	86	65	81	63	69	67	24	27	32	35	1097
South El Monte	9	34	270	118.1	101	72	97	70	95	70	91	68	74	72	28	31	36	38	
South Entr Yosemite	16	37.5	5120	119.6	92	61	88	60	87	60	84	59	64	62	36	8	15	20	5789
South Gate	8	33.9	120	118.2	97	70	90	69	88	69	84	67	72	70	21	32	37	39	
South Laguna	6	33.6	100	117.7	91	69	83	68	82	68	78	66	71	69	18	30	33	36	586
South Lake Tahoe	16	38.9	6200	120	85	56	82	55	79	55	71	54	60	58	33	-2	3	10	
South Oroville	11	39.5	174	121.6	106	71	104	70	102	70	98	69	74	72	37	25	30	33	1385

City	Climate Zone	Latitude	Elevation (ft)	Longitude	Cooling 0.10% DB	Cooling 0.10% MCWB	Cooling 0.50% DB	Cooling 0.50% MCWB	Cooling 1.00% DB	Cooling 1.00% MCWB	Cooling 2.00% DB	Cooling 2.00% MCWB	Design Wetbulb 0.1%	Design Wetbulb 0.5%	Outdoor Daily Range	Heating Winter Median of Extremes	Heating Design Drybulb (0.2%)	Heating Design Drybulb (0.6%)	HDD*
South Pasadena	9	34	657	118.2	99	69	94	68	92	68	88	67	73	71	30	31	36	38	
South San Francisco	3	37.7	10	122.4	87	67	81	64	78	64	72	62	68	65	20	32	36	38	
South San Gabriel	9	34.1	450	118.1	99	70	94	69	92	69	88	68	73	71	73	30	35	37	431
South Whittier	9	33.9	300	118	100	70	92	69	90	69	84	68	73	71	30	31	36	38	
South Yuba City	11	39.1	59	121.6	105	69	101	69	100	69	96	68	72	71	36	24	29	32	1160
Spring Valley	10	32.7	300	117	94	69	86	68	85	68	82	66	71	69	30	34	38	41	
Squaw Valley	16	39.2	6235	120.2	88	57	85	56	84	56	80	54	61	59	40	-10	-4	0	
Squirrel Inn	16	34.2	5680	117.2	86	61	82	60	81	60	77	58	65	63	23	12	18	22	5175
Stanford	4	37.5	23	122.1	93	66	85	64	83	64	77	62	68	66	25	26	31	34	1103
Stanton	8	33.6	45	118	98	69	91	68	89	68	84	67	72	70	24	31	36	38	
Stockton AP	12	37.9	22	121.3	103	71	98	69	97	69	93	67	73	71	35	24	28	30	2806
Stockton FS 4	12	38	12	121.3	101	70	96	68	95	68	91	67	72	70	37	24	28	30	2846
Stony Gorge Res	11	39.6	791	122.5	104	70	99	69	97	69	93	67	72	70	37	21	27	30	3149
Strawberry Valley	16	39.6	3808	121.1	96	63	93	62	92	62	88	60	66	64	32	14	21	25	5120
Studio City	9	34.3	620	118.4	102	70	97	69	95	69	91	67	73	71	31	28	33	36	664
Suisun City	12	38.2	72	122	103	71	98	69	96	68	91	66	73	70	35	24	29	32	1299
Sun City	10	33.7	1420	117.2	105	70	101	69	100	69	97	68	74	72	39	22	27	30	827
Sunland	16	34.3	1460	118.3	107	71	102	70	100	70	96	68	74	72	36	28	33	36	
Sunnyvale	4	37.3	97	122	96	68	88	66	86	66	80	64	70	68	26	29	34	36	2511
Susanville AP	16	40.4	4148	120.6	98	62	95	61	94	61	90	59	66	64	38	-1	4	11	6233
Taft	13	35.1	987	119.5	106	71	102	70	101	70	98	68	74	72	34	26	31	35	934
Tahoe City	16	39.2	6230	120.1	84	56	81	55	80	55	76	53	60	58	36	2	7	14	8085
Tahoe Valley AP	16	38.9	6254	120.0	85	56	82	55	81	55	77	53	60	58	38	-5	2	6	
Tamalpais-Homestead Valley	3	37.9	25	122.5	97	68	91	66	89	66	84	64	70	68	28	28	33	35	874

City	Climate Zone	Latitude	Elevation (ft)	Longitude	Cooling 0.10% DB	Cooling 0.10% MCWB	Cooling 0.50% DB	Cooling 0.50% MCWB	Cooling 1.00% DB	Cooling 1.00% MCWB	Cooling 2.00% DB	Cooling 2.00% MCWB	Design Wetbulb 0.1%	Design Wetbulb 0.5%	Outdoor Daily Range	Heating Winter Median of Extremes	Heating Design Drybulb (0.2%)	Heating Design Drybulb (0.6%)	HDD*
Tarzana	9	34.2	800	118.6	104	71	99	69	97	69	93	68	74	71	27	27	32	35	664
Tehachapi	16	35.1	3975	118.5	97	66	93	65	92	65	89	64	69	67	33	13	20	24	4494
Tejon Rancho	16	35	1425	118.8	107	71	103	70	102	70	99	68	74	72	27	24	29	32	2602
Temecula	10	33.5	1006	117.2	101	69	96	68	95	68	91	67	73	71	34	24	29	32	
Temple City	9	34.1	403	118.1	101	70	95	69	93	69	89	68	73	71	27	30	35	37	
Termo	16	40.9	5300	120.5	95	60	92	59	91	59	87	57	64	62	37	-17	-11	-4	
Thermal AP	15	33.6	-112	116.1	114	74	110	74	109	74	106	74	80	79	29	26	31	35	1154
Thermalito	11	37.9	25	121.6	106	71	104	70	102	70	98	69	74	72	37	25	30	33	
Thousand Oaks	9	34.2	810	118.8	98	69	93	68	92	68	88	67	72	70	30	27	32	35	
Three Rivers PH 1	13	36.5	1140	118.9	105	70	102	69	101	69	98	67	73	71	38	24	30	32	2642
Tiburon	3	37.9	90	122.5	85	66	80	65	78	65	73	63	67	65	12	30	34	36	
Tiger Creek PH	16	38.5	2355	120.5	100	66	96	65	95	65	92	63	69	67	36	20	26	29	3795
Torrance	6	33.8	110	118.3	93	69	86	68	84	68	80	66	71	69	18	32	37	39	1859
Tracy Carbona	12	37.7	140	121.4	102	70	97	68	95	68	90	67	72	70	38	24	29	32	2704
Tracy Pumps	12	37.8	61	121.4	104	71	99	69	97	69	92	68	73	71	39	23	28	31	
Travis AFB	12	38.3	72	121.9	103	71	98	69	96	68	91	66	73	70	35	24	29	32	2725
Trinity Dam	16	40.8	2500	122.8	99	65	94	64	92	64	88	62	68	66	37	17	24	28	
Trona	14	35.8	1695	117.4	113	72	109	70	108	70	105	68	76	73	35	18	24	27	2415
Truckee RS	16	39.3	5995	120.2	90	58	87	57	86	57	82	55	62	60	40	-10	-4	0	8230
Tujunga	16	34.3	1820	118.3	103	70	99	69	98	69	94	67	73	71	36	20	26	29	
Tulare	13	36.2	290	119.4	105	72	101	71	100	71	96	69	74	72	39	24	30	34	
Tulelake	16	42	4035	121.5	92	60	88	59	87	59	83	57	63	61	41	-5	0	6	6854
Turlock	12	37.5	100	120.9	104	72	100	70	99	70	95	68	74	72	40	24	30	34	
Turntable Creek	16	40.8	1067	120.9	105	69	101	68	99	68	95	66	72	70	28	24	29	32	
Tustin Foothills	8	33.8	500	117.8	99	71	92	69	90	69	85	68	73	71	27	28	31	34	550

City	Climate Zone	Latitude	Elevation (ft)	Longitude	Cooling 0.10% DB	Cooling 0.10% MCWB	Cooling 0.50% DB	Cooling 0.50% MCWB	Cooling 1.00% DB	Cooling 1.00% MCWB	Cooling 2.00% DB	Cooling 2.00% MCWB	Design Wetbulb 0.1%	Design Wetbulb 0.5%	Outdoor Daily Range	Heating Winter Median of Extremes	Heating Design Drybulb (0.2%)	Heating Design Drybulb (0.6%)	HDD*
Tustin Irvine Rch	8	33.7	118	117.8	99	71	92	69	90	69	85	68	73	71	27	28	31	34	1856
Twentynine Palms	14	34.1	1975	116.1	110	71	107	70	106	70	103	69	76	74	31	21	26	29	1973
Twin Lakes	16	38.7	7829	119.1	73	49	64	47	62	47	57	46	53	50	30	-7	-2	4	9196
Twitchell Dam	5	35	582	120.3	99	70	93	68	92	68	88	66	71	69	26	26	31	34	
UCLA	9	34.1	430	118.4	93	69	86	68	84	68	80	66	71	69	20	39	43	46	1509
Ukiah	2	39.2	623	123.2	100	70	97	69	96	69	92	68	72	71	42	22	28	31	2958
Union City	3	37.6	5	122.1	90	67	87	66	85	65	81	63	69	67	20	25	30	33	
Upland	10	34.1	1605	117.7	102	69	98	68	96	68	92	66	73	71	31	29	34	36	2175
Upper Lake RS	2	39.2	1347	123	98	68	95	67	94	66	91	64	73	71	39	18	34	36	
Upper San Leandro	3	37.8	394	122.1	93	67	87	66	85	65	80	63	69	67	22	28	33	35	
Vacaville	12	38.4	105	122	103	71	100	70	98	70	94	68	73	71	40	23	28	31	2788
Valinda	9	34	340	117.9	102	70	98	69	96	69	92	68	74	72	28	31	36	38	
Valle Vista	10	33.8	1655	116.9	109	70	104	69	103	69	101	67	74	72	40	20	25	28	
Vallejo	3	38.1	85	122.3	93	67	90	66	88	66	84	64	70	68	23	28	33	36	
Valyermo RS	14	34.5	3600	117.9	100	67	96	66	95	66	91	65	70	68	41	12	19	24	3870
Van Nuys	9	34.2	708	118.5	103	71	98	69	96	69	92	67	74	71	30	28	33	39	664
Vandenburg AFB	5	34.7	368	122.8	85	62	77	61	75	61	71	60	64	62	16	30	35	37	3451
Ventura	6	34.3	341	119.3	89	68	82	67	80	67	76	66	70	68	15	29	34	36	
Victorville Pumps	14	34.5	2858	117.3	105	67	101	65	100	64	97	62	70	68	39	14	24	27	3191
View Park	6, 8	34	300	118.3	95	69	88	68	85	68	78	66	71	69	18	36	40	43	
Villa Park	8	33.8	300	117.8	99	70	92	68	90	68	85	67	72	70	27	33	37	40	550
Vincent	9	34.5	3135	118.1	105	67	101	65	100	65	96	64	71	69	33	10	18	22	1455
Visalia	13	36.3	325	119.3	103	71	100	70	99	70	96	69	73	72	38	25	30	33	2459
Vista	10	33.2	510	117.2	96	69	90	68	89	68	85	67	72	70	16	30	35	37	
Volta PH	12	40.5	2220	120.9	101	66	98	65	97	65	93	63	69	67	33	21	27	30	

City	Climate Zone	Latitude	Elevation (ft)	Longitude	Cooling 0.10% DB	Cooling 0.10% MCWB	Cooling 0.50% DB	Cooling 0.50% MCWB	Cooling 1.00% DB	Cooling 1.00% MCWB	Cooling 2.00% DB	Cooling 2.00% MCWB	Design Wetbulb 0.1%	Design Wetbulb 0.5%	Outdoor Daily Range	Heating Winter Median of Extremes	Heating Design Drybulb (0.2%)	Heating Design Drybulb (0.6%)	HDD*
Walnut	9	34	550	117.9	101	70	97	69	96	69	92	69	74	72	30	28	33	35	
Walnut Creek	12	37.9	245	122.1	100	69	94	67	92	67	87	66	71	69	32	23	29	31	
Walnut Grove	12	38.2	23	121.5	102	70	98	69	96	69	92	68	72	71	37	24	30	32	
Walnut Park	8	33.9	45	118.2	92	69	84	68	82	68	78	66	71	69	12	37	42	44	450
Warner Springs	14	33.3	3180	116.6	100	67	95	66	94	66	91	65	71	69	40	15	22	26	3591
Wasco	13	35.6	333	119.3	105	71	101	70	100	70	97	68	74	72	36	23	28	31	2466
Watsonville	3	36.9	95	121.8	86	66	82	64	81	63	79	61	68	65	22	28	33	35	3418
Weaverville RS	16	40.7	2050	122.9	100	67	95	66	93	65	89	63	69	67	46	10	17	22	4992
Weed FD	16	41.4	3590	122.4	92	63	89	62	88	61	84	59	65	63	35	4	12	17	
West Athens	8	33.9	25	118.3	92	69	85	68	84	68	80	66	71	69	18	32	37	39	450
West Carson	6	33.8	100	118.3	92	69	87	68	85	68	81	66	71	69	18	32	37	39	
West Compton	8	33.9	71	118.3	97	69	90	68	88	68	83	67	72	70	21	33	37	39	450
West Covina	9	34	365	117.9	102	70	98	69	96	69	92	68	74	72	34	29	34	36	
West Hollywood	9	34	290	118.4	95	70	89	69	87	69	82	67	72	70	20	38	42	45	
West Pittsburg	12	38	12	121.9	102	70	97	68	95	68	90	67	72	70	34	26	32	35	
West Puente Valley	9	34	500	117.9	101	71	97	70	95	70	91	68	73	71	26	31	36	39	
West Sacramento	12	38.6	19	121.5	104	72	100	70	98	70	94	68	74	71	35	26	31	33	1290
West Whittier-Los Nietos	9	34	320	118.1	99	69	90	68	88	68	84	67	72	70	24	31	35	38	
Westlake Village	9	34.2	750	118.8	103	71	99	70	98	70	94	69	73	71	26	26	30	33	
Westminster	6	33.8	38	118	95	70	88	68	86	68	81	67	72	70	23	33	38	41	
Westmont	8	33.9	110	118.3	96	70	89	69	87	69	83	67	72	70	20	36	41	44	400
Whiskeytown Res	11	40.6	1295	122.6	105	69	101	68	100	68	96	67	72	70	31	25	30	33	
White Mtn 1	16	37.5	10150	119.3	73	49	69	47	68	47	65	45	53	50	37	-15	-9	-6	
White Mtn 2	16	37.6	12470	119.3	61	42	58	41	57	41	54	40	46	43	38	-20	-15	-12	

City	Climate Zone	Latitude	Elevation (ft)	Longitude	Cooling 0.10% DB	Cooling 0.10% MCWB	Cooling 0.50% DB	Cooling 0.50% MCWB	Cooling 1.00% DB	Cooling 1.00% MCWB	Cooling 2.00% DB	Cooling 2.00% MCWB	Design Wetbulb 0.1%	Design Wetbulb 0.5%	Outdoor Daily Range	Winter Median of Extremes	Heating Design Drybulb (0.2%)	Heating Design Drybulb (0.6%)	HDD*
Whittier	9	34	320	118	99	69	90	68	88	68	84	67	72	70	24	31	35	38	
Wildomar	10	33.6	1255	117.3	103	70	99	69	98	69	94	68	74	72	36	23	28	30	827
Wildrose RS	16	36.3	4100		100	64	97	63	96	63	93	61	68	66	33	13	20	24	
Williams	11	39.2	85	122.2	104	71	100	70	98	70	94	68	73	71	36	24	29	32	
Willits	2	39.4	1350	123.3	95	66	89	65	87	64	82	62	68	66	38	18	24	27	
Willow Brook	8	33.9	60	118.2	97	70	90	69	88	69	83	67	72	70	21	35	39	42	
Willow Creek	2	41	461	123	104	70	98	68	96	68	92	66	71	69	35	22	28	31	
Willows	11	39.5	140	122.2	104	71	100	70	98	70	94	68	73	71	36	22	28	31	2836
Windsor	2	38.5	130	122.8	99	69	96	68	95	68	92	66	71	69	35	24	27	29	1249
Winters	12	38.5	135	122	104	71	99	70	97	70	93	68	73	71	38	24	29	32	2593
Winton	12	37.4	168	120.6	103	71	100	69	99	69	95	67	73	71	36	21	27	30	1244
Woodcrest	10	33.9	1500	117.4	104	70	100	69	99	68	95	65	74	72	37	27	32	35	611
Woodfords	16	38.8	5671	119.8	92	59	89	58	88	58	84	56	63	61	32	0	5	12	6047
Woodlake	13	36.3	500	119.1	103	71	100	70	99	70	96	69	73	72	38	25	30	33	1130
Woodland	12	38.7	69	121.8	106	72	101	71	100	71	96	69	74	72	40	25	30	33	2708
Woodland Hills	9	34.2	944	118.6	104	71	99	70	97	70	93	68	74	72	32	26	31	34	664
Woodside	3	37.5	75	122.3	92	67	84	66	82	65	76	63	69	67	24	22	28	31	
Yorba Linda	8	33.9	350	117.8	102	70	94	69	92	69	88	68	73	71	31	30	35	37	1643
Yosemite Park Hq	16	37.7	3970	119.6	97	63	94	62	93	62	90	60	67	65	38	11	18	23	4785
Yreka	16	41.7	2625	122.6	99	66	95	65	94	65	90	64	69	67	39	8	15	20	5395
Yuba City	11	39.1	70	121.6	105	69	101	69	100	69	96	68	72	71	36	24	29	32	
Yucaipa	10	34	2600	117	106	68	102	67	101	67	98	65	73	71	35	27	32	35	
Yucca Valley	14	34.2	2600	116.4	108	71	105	70	104	70	101	69	75	73	32	19	24	27	862

*__Heating Degree Day__ is a unit, based on temperature difference and time, used in estimating fuel consumption and specifying nominal annual heating load of a building. For any one day when the mean temperature is less than 65ºF (18ºC), there exist as many degree days as there are Fahrenheit degrees difference in temperature between mean temperature for the day and 65ºF (18ºC).

KEY TO ABBREVIATIONS:

AFB	Air Force Base
AFS	Air Force Station
AP	Airport
CO	City/County Office
FD	Fire Department
FS	Fire Station
MCB	Marine Corps Base
MWWB	Mean Coincident Wet Bulb
NAS	Naval Air Station
NM	National Monument
PH	Power House
RS	Ranger Station

(This page left intentionally blank.)

Joint Appendix JA3

Appendix JA3 – Time Dependent Valuation (TDV)

JA3.1 Scope and Purpose

Time dependent valuation (TDV) is the currency used to compare energy performance when the performance compliance method is used. TDV is also used to evaluate the cost effectiveness of measures and to perform other codes analysis. TDV replaces source energy, which was used to compare performance prior to the 2005 Standards.

TDV consists of large data sets that convert electricity, gas or propane to TDV energy. The rate of conversion varies for each hour of the year, for each climate zone and for each energy type (electricity, natural gas or propane). The conversion factors also vary by building type: low-rise residential and other building types, including nonresidential, hotel/motel and high-rise residential. There are a total of 144 hourly data sets (16 climate zones x 3 fuel types x 3 building types) where the 3 building types are residential 30 year, nonresidential 15 year, nonresidential 30 year. The actual TDV data may be downloaded from http://www.energy.ca.gov/title24/2013standards/prerulemaking/documents/general_cec_documents/2011_TDV_v3_110112.xlsx.

Because of the length, the actual data is not published in this appendix.

JA3.2 Summary of Data

Table 3-4 through Table 3-6 give a statistical summary of the TDV conversion factors for electricity, natural gas and propane. Each table has the annual minimum, maximum, and average for each climate zone and building type.

(a) Table 3-4 – TDV Statistical Data – Electricity (kBtu/kWh)

(b) Table 3-5 – TDV Statistical Data – Natural Gas (kBtu/therm)

(c) Table 3-6 – TDV Statistical Data – Propane (kBtu/therm)

Table 3-4 – TDV Statistical Data – Electricity (kBtu/kWh)

	Residential			Nonresidential (15yr)			Nonresidential (30 yr)		
Climate Zone	Minimum	Average	Maximum	Minimum	Average	Maximum	Minimum	Average	Maximum
1	10.68	21.26	165.87	9.40	20.89	188.25	10.02	21.92	184.56
2	10.68	21.26	237.74	9.35	20.83	271.49	9.96	21.86	265.33
3	10.68	21.26	276.54	9.36	20.84	317.49	9.97	21.87	308.99
4	10.68	21.26	254.19	9.35	20.84	290.99	9.97	21.87	283.84
5	10.67	21.26	203.75	9.42	20.90	231.55	10.03	21.93	227.17
6	9.99	20.53	343.04	9.31	20.75	397.14	9.92	21.77	384.48
7	10.78	21.32	308.10	9.71	21.15	352.22	10.33	22.18	344.71
8	10.02	20.56	240.70	9.32	20.76	275.83	9.94	21.79	269.38
9	9.87	20.41	317.59	9.22	20.66	367.04	9.84	21.70	355.93
10	9.86	20.40	241.73	9.20	20.64	277.34	9.82	21.68	270.60
11	9.86	21.26	245.82	9.37	20.85	281.60	9.98	21.89	274.44
12	10.67	21.26	208.46	9.38	20.86	236.81	9.99	21.89	232.43
13	10.68	21.26	175.5	9.36	20.84	197.73	9.97	21.87	195.34
14	9.85	20.39	153.52	9.20	20.64	172.81	9.82	21.68	171.40
15	9.87	20.40	156.97	9.23	20.67	176.90	9.85	21.70	175.29
16	9.81	20.35	225.15	9.17	20.61	257.72	9.80	21.65	251.97

Table 3-5 – TDV Statistical Data – Natural Gas (kBtu/therm)

	Residential			Nonresidential (15yr)			Nonresidential (30 year)		
Climate Zone	Minimum	Average	Maximum	Minimum	Average	Maximum	Minimum	Average	Maximum
1	140.86	159.51	185.55	142.20	163.33	192.87	147.02	167.98	197.27
2	140.86	159.51	185.55	142.20	163.33	192.87	147.02	167.98	197.27
3	140.86	159.51	185.55	142.20	163.33	192.87	147.02	167.98	197.27
4	140.86	159.51	185.55	142.20	163.33	192.87	147.02	167.98	197.27
5	140.86	159.51	185.55	142.20	163.33	192.87	147.02	167.98	197.27
6	141.14	160.45	187.44	142.50	164.40	195.04	147.33	169.04	199.40
7	140.43	157.62	181.62	142.70	165.49	197.38	147.54	170.12	201.70
8	141.14	160.45	187.44	142.50	164.40	195.04	147.33	169.04	199.40
9	141.14	160.45	187.44	142.50	164.40	195.04	147.33	169.04	199.40
10	141.14	160.45	187.44	142.50	164.40	195.04	147.33	169.04	199.40
11	140.86	159.51	185.55	142.20	163.33	192.87	147.02	167.98	197.27
12	140.86	159.51	185.55	142.20	16.33	192.87	147.02	167.98	197.27
13	140.86	159.51	185.55	142.20	163.33	192.87	147.02	167.98	197.27
14	141.14	160.45	187.44	142.50	164.40	195.04	147.33	169.04	199.40
15	141.14	160.45	187.44	142.50	164.40	195.04	147.33	169.04	199.40
16	141.14	160.45	187.44	142.50	164.40	195.04	147.33	169.04	199.40

Table 3-6 – TDV Statistical Data – Propane (kBtu/therm)

	Residential			Nonresidential (15yr)			Nonresidential (30 year)		
Climate Zone	Minimum	Average	Maximum	Minimum	Average	Maximum	Minimum	Average	Maximum
1	328.06	410.71	480.19	299.23	374.89	438.49	311.42	389.24	454.66
2	328.06	410.71	480.19	299.23	374.89	438.49	311.42	389.24	454.66
3	328.06	410.71	480.19	299.23	374.89	438.49	311.42	389.24	454.66
4	328.06	410.71	480.19	299.23	374.89	438.49	311.42	389.24	454.66
5	328.06	410.71	480.19	299.23	374.89	438.49	311.42	389.24	454.66
6	328.06	410.71	480.19	299.23	374.89	438.49	311.42	389.24	454.66
7	328.06	410.71	480.19	299.23	374.89	438.49	311.42	389.24	454.66
8	328.06	410.71	480.19	299.23	374.89	438.49	311.42	389.24	454.66
9	328.06	410.71	480.19	299.23	374.89	438.49	311.42	389.24	454.66
10	328.06	410.71	480.19	299.23	374.89	438.49	311.42	389.24	454.66
11	328.06	410.71	480.19	299.23	374.89	438.49	311.42	389.24	454.66
12	328.06	410.71	480.19	299.23	374.89	438.49	311.42	389.24	454.66
13	328.06	410.71	480.19	299.23	374.89	438.49	311.42	389.24	454.66
14	328.06	410.71	480.19	299.23	374.89	438.49	311.42	389.24	454.66
15	328.06	410.71	480.19	299.23	374.89	438.49	311.42	389.24	454.66
16	328.06	410.71	480.19	299.23	374.89	438.49	311.42	389.24	454.66

(This page left intentionally blank.)

Joint Appendix JA4

Appendix JA4 – U-factor, C-factor, and Thermal Mass Data

Table of Contents

4.1 Scope and Purpose 2
4.1.1 Introduction 2
4.1.2 California Energy Commission Approved Software 3
Accounting for Continuous Insulation R-value 5
Accounting for Unusual Construction Layers 6
Double Walls 6
4.1.3 Tapered Insulation 7
4.1.4 Insulating Layers on Mass and Other Walls 7
4.1.5 Wood Based Sheathing R-values 7
4.1.6 Framing Percentages for Calculating U-factors 8
4.1.7 R-values and U-factors for Spray Polyurethane Foam (SPF) Insulation 6
4.2 Roofs and Ceilings 11
Table 4.2.1 – U-factors of Wood Framed Attic Roofs 11
Table 4.2.2 – U-factors of Wood Framed Rafter Roofs 14
Table 4.2.3 – U-factors of Structurally Insulated Panels (SIPS) Roof/Ceilings 17
Table 4.2.4 – U-factors of Metal Framed Attic Roofs 20
Table 4.2.5 – U-factors of Metal Framed Rafter Roofs 22
Table 4.2.6 –U-factors for Span Deck and Concrete Roofs 25
Table 4.2.7 – U-factors for Metal Building Roofs 27
Table 4.2.8 – U-factors for Insulated Ceiling with Removable Panels 29
Table 4.2.9 – U-factors of Insulated Metal Panel Roofs and Ceilings 30
4.3 Walls 31
Table 4.3.1 – U-factors of Wood Framed Walls 31
Table 4.3.2 – U-factors of Structurally Insulated Wall Panels (SIPS) 33
Table 4.3.3 – U-factors of Metal Framed Walls for Nonresidential Construction 37
Table 4.3.4 – U-factors of Metal Framed Walls for Residential Construction 39
Table 4.3.5 – Properties of Hollow Unit Masonry Walls 41
Table 4.3.6 – Properties of Solid Unit Masonry and Solid Concrete Walls 43

Table 4.3.7 – Properties of Concrete Sandwich Panels ..... **Error! Bookmark not defined.**
Table 4.3.8 – U-factors for Spandrel Panels and Glass Curtain Walls 47
Table 4.3.9 – U-factors for Metal Building Walls 51
Table 4.3.10 – U-factors for Insulated Metal Panel Walls 53
Table 4.3.11 – Thermal Properties of Log Home Walls 54
Table 4.3.12 – Thermal and Mass Properties of Straw Bale Walls 55
Table 4.3.13 – Thermal Properties of Insulated Concrete Forms 56
Table 4.3.14 – Effective R-values for Interior or Exterior Insulation Layers 58
4.4 Floors and Slabs 60
Table 4.4.1 – Standard U-factors for Wood-Framed Floors with a Crawl Space 60
Table 4.4.2 – Standard U-factors for Wood Framed Floors without a Crawl Space 62
Table 4.4.3 – Standard U-factors for Wood Foam Panel (SIP) Floors 64
Table 4.4.4 – Standard U-factors for Metal-Framed Floors with a Crawl Space 66
Table 4.4.5 – Standard U-factors for Metal-Framed Floors without a Crawl Space 68
Table 4.4.6 – Standard U-factors for Concrete Raised Floors 70
Table 4.4.7 – F-Factors for Unheated Slab-on-Grade Floors 71
Table 4.4.8 – F-Factors for Heated Slab-on-Grade Floors 72
4.5 Miscellaneous Construction 73
Table 4.5.1 – Opaque Doors 73
4.6 Modeling Constructions in the Nonresidential ACM ..... **Error! Bookmark not defined.**
Table 4.6.1 – Physical Properties of Materials 75
Table 4.6.2 – Rules for Calculating Mass Thermal Properties From Published Values 75

4.1 Scope and Purpose

JA4.1.1 Introduction

The values in this appendix must be used for all residential and nonresidential prescriptive compliance calculations. California Energy Commission approved compliance software may make adjustments to the values in these tables using procedures described in this appendix.

The data tables are organized first by roofs, walls, and floors. For each, the data is further organized by construction type, beginning with wood framed construction, followed by metal framed construction, concrete and special construction assemblies. Each table features a letter/number coordinate system (shaded in gray) that can be used as an identifier for each value, i.e. 4.2.1-A10 indicates Table 4.2.1, Column A, Row 10. Construction assembly descriptions shall be concatenated first by row and then by column. For example, the descriptions of 4.2.1.-A20 and 4.3.1-H3 and shall be as follows (abbreviations are acceptable):

Wood Framed Attic, Trusses@24 inch. OC, R-30 attic insulation, No continuous insulation
Wood Framed Wall, Wd 2x4 @16 inch OC, R-13 cavity insulation, R-14 continuous insulation

The R-value representing the component(s) of a construction assembly may be rounded to the nearest whole R-value. If a construction assembly is not adequately represented in the tables below, the permit applicant or the manufacturer of the product may request the California Energy Commission approve alternative U-factors for the construction assembly. The California Energy Commission Executive Director will grant such approval,

after reviewing submittals and supporting information from the applicant and the merits of the information to support the intended use. Acceptable calculation methods for determining a construction component's R-value or overall assembly U-factor are based on ASHRAE *Handbook of Fundamental* procedures, such as:

(a) Testing: Guarded Hot Plate (ASTM C177)

Heat Flow Meter (ASTM C518)

Hot Box Apparatus (ASTM C1363)

(b) Series/Parallel Path Calculation Method for wood framed assemblies of roof/ceilings, walls (above and below grade), and floors.

(c) Modified Zone Method for roof/ceilings, walls, and floor constructions that have metal framing.

New component(s) of a construction assembly approved by the Executive Director will be published as an addendum to this appendix for use by all compliance authors. Addenda may consist of new tables or additional rows or columns to existing tables.

JA4.1.2 California Energy Commission Approved Software

California Energy Commission approved software used for performance or prescriptive calculations may make adjustments to the data contained in this appendix to account for the special circumstances of particular constructions. This section defines the rules for making these adjustments. These adjustments may not be made when the tables are used manually. Software may have input screens where the user may choose a construction by entering the cavity insulation (or insulation penetrated by framing); the continuous insulation; and other factors such as framing spacing. To the software user, the process of using these tables may look very much like a traditional U-factor calculation.

JA4.1.2.1 Determining R-value and U-factor of Construction Assemblies

The installer shall provide documentation from the manufacturer supporting the installed R-value. Some products have R-value markings, others do not. For site applied insulation (i.e., loose-fill glass fiber and mineral fiber, cellulose, and spray polyurethane foam insulation), the insulation shall be installed in comformance to the manufacturer's coverage chart, R-value chart, or similar performance data sheet.

Data presented in the tables is not inclusive of all materials or combinations of materials used in construction of residential and nonresidential buildings. Information presented for framed and nonframed assemblies provides a summary of the reference assembly components representing the R-value and U-factor necessary for determining prescriptive compliance with the Standards. This data is also used by approved compliance software to establish the required thermal efficiencies affecting energy use for the standard design building in performance compliance calculations.

R-value is used to describe insulation effectiveness, but R-value does not describe the overall performance of the complete assembly. Construction assemblies usually have more than one layer and each layer has its own conductance, or rate of heat transfer. The U-factor more fully describes the conductance of every component of the construction assembly.

The prescriptive compliance table values for framed and nonframed assemblies of wood and steel roof and ceilings, walls, and floors are developed from series and parallel path procedures of the American Society of Heating, Refrigerating and Air-Conditioning Engineers, Inc. (ASHRAE). Approved computer software uses more detailed calculations and must be used for all buildings using mass type construction. Prescriptive compliance can be demonstrated when the insulation's R-value is equal to or greater than the R-value required for the envelope feature in the climate zone which the building is permitted for construction; or has an overall U-factor equal to or less than the U-factor required for the envelope feature in the climate zone which the building is permitted for construction.

For example, the R-value and U-factor of components within assemblies of wood framing that are not represented in the tables can be calculated using the procedure shown below (i.e., substituting for different components). For example, R-values of different insulation types can be inserted into Table 4.1.1 and the assembly's overall R-value and U-factor can be determined. Each layer of the assembly is entered in sequence at a cross-section through its cavity, from outside to inside.

For more advanced assemblies, and for steel framed assemblies, the Energy Commission has developed the EZ-FRAME2013 program to automate ASHRAE procedures in order to help the building community in calculating R-values and U-factors of wood and metal framed assemblies with a higher degree of accuracy and speed. The output forms of this program can be used as part of a residential or nonresidential building permit submittal.

Table 4.1.1 U-Factor Calculations for Wood Framed Assembly

	Assembly Type: Wall 2x4 16 in. o.c	R-Value	
	Framing Material: Wood		
	Assembly Components	**Cavity (R_c)**	**Frame (R_f)**
	Outside air film	0.17	0.17
1	3/8 inch 2-coat stucco	0.08	0.08
2	1 inch, R-4 EPS insulating sheathing	4.0	4.0
3	Building paper (felt)	0.06	0.06
4	R-15 insulation	15	--
5	2x4 inch doug fir framing @ R-0.99 per inch	--	3.47
6	0.50 inch gypsum board	0.45	0.45
	Inside air film	0.68	0.68
	Subtotal	**20.44**	**8.91**

	1/Rc	X (1–(Frame% / 100))]	+	[	(1/Rf)	X	(Frame% / 100)]		Assembly U-Factor
	[(1/20.44)	X (1- (25/100))]	+	[	(1/8.91)	X	(25/100)]		**0.065**

[1/Rc x (1 – (Frame% / 100))] + [(1/Rf) x (Frame% / 100)] = Assembly U-Factor

Where: Frame percentage (%) determined by Table 4.1.6

JA4.1.2.2 Accounting for Continuous Insulation R-value

Many of the tables in this appendix have columns for varying levels of continuous insulation. Continuous insulation is insulation that is uninterrupted by framing and provides a continuous insulating layer. Limits on the position of the continuous insulation and other factors are specified in each table. When data from a table is used manually, the R-value of the continuous insulation in the proposed construction shall be equal to or greater than the R-value shown in the column heading; no interpolation is permitted. California Energy Commission approved software used for performance or prescriptive calculations may account for any amount of continuous insulation using Equation 4-1. This adjustment may not be used, however, for continuous insulation with thermal resistance less than R-2.

$$U_{With.Cont.Insul} = \frac{1}{\frac{1}{U_{Col.A}} + R_{Cont.Insul}}$$ **Equation 4-1**

Where:

$U_{With.Cont.Insul}$ Calculated U-factor of the construction assembly with a specific R-value of continuous insulation.

$U_{Col.A}$ A U-factor selected from column A.

$R_{Cont.Insul}$ The R-value of continuous insulation.

If insulation layers are added that are interrupted by furring strips, then the effective R-values from Table 4. 3.13 shall be used in Equation 4-1.

JA4.1.2.3 Accounting for Unusual Construction Layers

The assumptions that are the basis of the U-factors published in this appendix are documented in the paragraphs following each table. California Energy Commission approved software used for prescriptive or performance calculations may be used to make adjustments to these assumptions based on data entered by the software user. Adjustments may only be made, however, when the total R-value of the proposed construction is at least an R-2 greater than the documented assumption. Each table includes the assumptions used to determine the U-factors.

Equation 4-2 shall be used to make these adjustments.

$$U_{Proposed} = \frac{1}{\frac{1}{U_{With.Cont.Insul}} + \Delta R_{Assumed}} \qquad \text{Equation 4-2}$$

Where:

$U_{Proposed}$ Calculated U-factor of the proposed construction assembly.

$U_{With.Cont.Insul}$ The U-factor adjusted for continuous insulation using Equation 4-1.

$\Delta R_{Assumed}$ The difference in R-value between what was assumed in the table and the proposed construction for a continuous layer.

There are limits, however, on the types of adjustments that can be made.

(a) The difference in resistance shall be at least R-2. When calculating the difference in R-value, no changes in assumptions shall be made to the framing/insulation layer; the proposed construction shall assume the same values as the table.

(b) The thermal resistance of air layers shall be taken from the 2009 ASHRAE Handbook of Fundamentals, for a mean temperature of 50°F, a temperature difference of 20 °F and an effective emittance of 0.82.

(c) R-values for air layers for roof and ceiling assemblies shall be based on heat flow up. R-values for air layers for floor assemblies shall be based on heat flow down. R-values for other assemblies shall be based on horizontal heat flow. Air layers must be sealed on edges to prevent air layer mixing with ambient air.

(d) One additional air gap may be credited, but not air gaps that are within the framing insulation cavity layer; these are already accounted for in the published data. Air gaps of less than 0.5 inch thickness shall be considered to have an R-value of zero. An example of an acceptable additional air gap would be the space between a brick veneer and the sheathing on the framed wall.

JA4.1.2.4 Double Walls

The U-factor of double walls or other double assemblies may be determined by combining the U-factors from the individual construction assemblies that make up the double wall. The following equation shall be used.

$$U_{Combined} = \frac{1}{\frac{1}{U_1} + \frac{1}{U_2}} \qquad \text{Equation 4-3}$$

JA4.1.3 Tapered Insulation

If continuous roof insulation is tapered for drainage or other purposes, then the user may determine the overall U-factor in one of two ways:

(a) To determine the U-factor for the roof at the location where the insulation is at a minimum and where it is at a maximum. Take the average of these two U-factors. With the R-value compliance approach (prescriptive method only), calculate the R-value as the inverse of the average U-factor as determined above. R-values may not be averaged.

(b) Divide the roof into sub-areas for each one-inch increment of insulation and determine the U-factor of each sub-area. This approach may only be used with the performance method, and in this case, each sub area shall be modeled as a separate surface.

When roofs have a drain located near the center and when tapered insulation creates a slope to the drain, the surface area at the maximum insulation thickness will be significantly greater than the surface area at the minimum thickness, so the second method will give a more accurate result. The first method yields a conservative estimate for roofs with central drains.

JA4.1.4 Insulating Layers on Mass and Other Walls

The data in Table 4.3.14 may be used to modify the U-factors and C-factors from Table 4.3.5, Table 4.3.6, and Table 4.3.7 when an additional layer is added to the inside or outside of the mass wall. For exterior insulation finish systems (EIFS) or other insulation only systems, values should be selected from row 26 of Table 4.3.14 In these cases, the R-value of the layer is equal to the R-value of the insulation. The other choices from this table represent systems typically placed on the inside of mass walls. The following equations calculate the total U-factor or C-factor, where U_{mass} and C_{mass} are selected from Table 4.3.5, Table 4.3.6, or Table 4.3.7 and $R_{Outside}$ and R_{Inside} are selected from Table 4.3.14. $R_{outside}$ is selected from row 26 while R_{inside} is selected from rows 1 through 25.

$$U_{Total} = \frac{1}{R_{Outside} + \frac{1}{U_{Mass}} + R_{Inside}} \qquad \text{Equation 4-4}$$

$$C_{Total} = \frac{1}{R_{Outside} + \frac{1}{C_{Mass}} + R_{Inside}} \qquad \text{Equation 4-5}$$

The values from Table 4.3.14 may be used to modify the U-factors of other construction assemblies as well, when non-homogeneous layers are added (see Equation 4-1).

JA4.1.5 Wood Based Sheathing R-values

For the purpose of calculations for the Joint Appendices plywood, particle board, oriented strand board (OSB) and similar sheathing materials will all be considered Wood Based Sheathing. A single R-value will be used for each thickness listed regardless of the material. This approach simplifies calculations yet has little effect on the overall R-value of assemblies since the differences in sheathing R-value are minimal compared to the overall assembly.

R-values for Wood Based Sheathing

Thickness	R-value (ft^2-hr ^oF/Btu)
3/8 inch	0.36
1/2 inch	0.48
5/8 inch	0.60
3/4 inch	0.72
1 inch	0.96
1 1/4 inch	1.20

JA4.1.6 Framing Percentages for Calculating U-factors

The thermal resistance of framed assemblies is dependent on the assembly's total R-value, and the quality of construction to limit air intrusion within the assembly that can rob the insulation of its effectiveness. A given assembly type is made of several individual layers components, each having specific resistance values. However, the assembly's R-value and overall U-factor is primarily affected by: (1) the R-value of insulation installed within the cavity, (2) the R-value of continuous insulating sheathing added to the interior or exterior face of the framing, and, (3) the amount of framing that interrupts the plane of insulation separating conditioned from unconditioned space. All framed assemblies shall include the framing percentages indicated in Table 4.1.6.

Advanced wall systems (AWS) reduce the amount of material required for wall framing which increases the insulation within the cavity by:

(a) Use of 24" oc framing

(b) Eliminating intermediate framing for cripple and king studs

(c) Use of single top plates

(d) Use of double stud corners

(e) Use of in-line (i.e., stack) framing to maintain continuity of transferring live loads of roof framing to wall framing, allowing roof sheathing and exterior siding to be installed at full widths

(f) Reducing framing for connections at interior partition walls (i.e., T-walls)

(g) Reducing window and door header size

Table 4.1.6 – Framing Percentages

Assembly Type	Framing Spacing	Framing Percentage
Walls	16"o.c.	25 %
	24"o.c.	22 %
	48"o.c.	4 %
AWS	24" o.c.	17%
Walls Metal	16"o.c.	15%
	24"o.c.	12%
Floors	16"o.c.	10 %
	24"o.c.	7 %
Roofs	16"o.c.	10 %
	24"o.c.	7 %
	48"o.c.	4 %

JA4.1.7 R-values and U-factors for Medium-Density Closed Cell and Low-Density Open Cell Spray Polyurethane Foam (SPF) Insulation:

These procedures apply to two types of SPF used as building insulation: medium-density closed cell SPF (ccSPF) and low-density open cell SPF (ocSPF).

(a) ccSPF: A spray applied polyurethane foam insulation having a closed cellular structure resulting in an installed nominal density of 1.5 to less than 2.5 pounds per cubic foot (pcf).

R-value: The total R-value shall be calculated based on the nominal required thickness of the insulation multiplied by an R-value of 5.8 per inch. The R-value of ccSPF insulation shall meet or exceed the installed thickness specified in Table 4.1.7.

Alternatively, the total R-value may be calculated based on the thickness of insulation multiplied by the "tested R-value per inch" as listed in the Table of R-values or R-value Chart from the manufacturer's current ICC Evaluation Service Report (ESR) that shows compliance with *Acceptance Criteria for Spray-Applied Foam Plastic Insulation--AC377*. Based on this calculation, the overall assembly U-factor shall be determined by selecting the assembly that matches the assembly type, framing configuration, and cavity insulation from the appropriate Reference Joint Appendix JA4 table or other approved method specified in Section JA4 of the Reference Appendices.

The R-value of the installed insulation shall be based on the verified thickness at an R-value of 5.8 per inch unless an ESR is provided with compliance documentation that verifies use of other values. Approved compliance software shall make appropriate adjustments to account for the R-value and U-factor effects of the ccSPF assembly.

Nominal Thickness: ccSPF sprayed into framed cavities or on flat surfaces will expand with variable thicknesses, visibly appearing as undulations on the surface of the insulation. The average thickness of the foam insulation must meet or exceed the required R-value. Depressions in the foam insulation's surface shall not be greater than 1/2-inch of the required thickness at any given point of the surface area being insulated.

Filling of Framed Assemblies: ccSPF insulation is not required to fill the cavities of framed assemblies provided the installed thickness of insulation conforms to compliance documentation and that the bottom and top plates of vertical framing and both ends of horizontal framing, including band and rim joists, are sprayed to completely fill the cavity adjacent to and in contact with the framing to a distance of 2.0 inches away from the framing for ocSPF insulation, or filled to the thickness meeting ASTM testing as an air barrier.

Air Barrier: ccSPF installed as an air barrier shall be a minimum of 2.0 inches in thickness; alternatively, ccSPF insulation shall be installed at a thickness that meets an air permeance no greater than 0.02 L/s-m^2 at 75 Pa pressure differential when tested in accordance to ASTM E2178 or ASTM E283.

(b) ocSPF: A spray applied polyurethane foam insulation having an open cellular structure resulting in an installed nominal density of 0.4 to less than 1.5 pounds per cubic foot (pcf).

R-value: The total R-value shall be calculated based on the nominal required thickness of the insulation multiplied by an R-value of 3.6 per inch. The R-value of ocSPF insulation shall meet or exceed the installed thickness specified in Table 4.1.7.

Alternatively, the total R-value may be calculated based on the thickness of insulation multiplied by the "tested R-value per inch" as listed in the Table of R-values or R-value Chart from the manufacturer's current ICC Evaluation Service Report (ESR) that shows compliance with *Acceptance Criteria for Spray-Applied Foam Plastic Insulation--AC377*. Based on this calculation, the overall assembly U-factor shall be determined by selecting the assembly that matches the assembly type, framing configuration, and cavity insulation from the appropriate Reference Joint Appendix JA4 table or other approved method specified in Section JA4 of the Reference Appendices.

The R-value of the installed insulation shall be based on the verified thickness at an R-value of 3.6 per inch unless an ESR is provided with compliance documentation that verifies use of other values. Approved compliance software shall make appropriate adjustments to account for the R-value and U-factor effects of the ocSPF assembly.

Nominal Thickness: ocSPF sprayed into framed cavities or on flat surfaces will expand with variable thicknesses, visibly appearing as undulations on the surface of the insulation. The average thickness of the foam insulation must meet or exceed the required R-value. Depressions in the foam insulation surface shall not be greater than 1-inch of the required thickness provided these depressions do not exceed 10% of the surface area being insulated.

Filling of Framed Assemblies: ocSPF insulation shall completely fill cavities of 2x4 inch framing or less. Cavities greater than 2x4 inch framing dimensions may be filled to the thickness that meets the required R-value used for compliance provided that the bottom and top plates of vertical framing and both ends of horizontal framing, including band and rim joists, are sprayed to completely fill the cavity adjacent to and in contact with the framing to a distance of 5.5 inches away from the framing for ocSPF insulation, or filled to the thickness meeting ASTM testing as an air barrier.

Air Barrier: ocSPF installed as an air barrier shall be a minimum of 5.5 inches in thickness; alternatively, ocSPF insulation shall be installed at a thickness that meets an air permeance no greater than 0.02 L/s-m^2 at 75 Pa pressure differential when tested in accordance to ASTM E2178 or ASTM E283.

Table 4.1.7: Required Thickness of SPF Insulation (inches) to Achieve Specified R-values

Equivalent R-Values for SPF insulation	**11**	**13**	**15**	**19**	**21**	**22**	**25**	**30**	**38**
Required thickness of ccSPF Insulation @ R5.8/inch	2.00	2.25	2.75	3.50	3.75	4.00	4.50	5.25	6.75
Required thickness of ocSPF insulation @ R3.6/inch	3.0	3.5	4.2	5.3	5.8	6.1	6.9	8.3	10.6

NOTE:

A HERS rater shall verify the installation of SPF insulation using the procedures specified in RA3.5.5 whenever R-values other than the default R-value per inch listed in Table 4.1.7 are used for compliance (see *"R-value"* in sections RA3.5.5.0.1(a) and RA3.5.5.0.1(b)).

JA4.2 Roofs and Ceilings

Table 4.2.1 – U-factors of Wood Framed Attic Roofs

Truss Spacing	R-value of Attic Insulation		Rated R-value of Continuous Insulation[1]							
			None	R-2	R-4	R-6	R-7	R-8	R-10	R-14
			A	B	C	D	E	F	G	H
16 in. OC	None	**1**	0.300	0.187	0.136	0.107	0.097	0.088	0.075	0.058
	R-11	**2**	0.079	0.068	0.060	0.053	0.051	0.048	0.044	0.037
	R-13	**3**	0.071	0.062	0.055	0.050	0.047	0.045	0.041	0.036
	R-19	**4**	0.049	0.045	0.041	0.038	0.037	0.035	0.033	0.029
	R-21	**5**	0.042	0.039	0.036	0.034	0.032	0.031	0.030	0.026
	R-22	**6**	0.043	0.039	0.037	0.034	0.033	0.032	0.030	0.027
	R-25	**7**	0.038	0.035	0.033	0.031	0.030	0.029	0.028	0.025
	R-30	**8**	0.032	0.030	0.028	0.027	0.026	0.025	0.024	0.022
	R-38	**9**	0.026	0.024	0.023	0.022	0.022	0.021	0.020	0.019
	R-44	**10**	0.021	0.020	0.019	0.019	0.018	0.018	0.017	0.016
	R-49	**11**	0.020	0.019	0.019	0.018	0.018	0.017	0.017	0.016
	R-60	**12**	0.017	0.016	0.016	0.015	0.015	0.015	0.014	0.013
24 in. OC	None	**13**	0.305	0.189	0.137	0.108	0.097	0.089	0.075	0.058
	R-11	**14**	0.076	0.066	0.058	0.052	0.050	0.047	0.043	0.037
	R-13	**15**	0.068	0.060	0.054	0.048	0.046	0.044	0.041	0.035
	R-19	**16**	0.048	0.043	0.040	0.037	0.036	0.034	0.032	0.029
	R-21	**17**	0.043	0.040	0.037	0.034	0.033	0.032	0.030	0.027
	R-22	**18**	0.041	0.038	0.036	0.033	0.032	0.031	0.029	0.026
	R-25	**19**	0.037	0.034	0.032	0.030	0.029	0.028	0.027	0.024
	R-30	**20**	0.031	0.029	0.028	0.026	0.025	0.025	0.024	0.022
	R-38	**21**	0.025	0.024	0.023	0.022	0.021	0.021	0.020	0.018
	R-44	**22**	0.021	0.020	0.019	0.019	0.018	0.018	0.017	0.016
	R-49	**23**	0.019	0.019	0.018	0.017	0.017	0.017	0.016	0.015
	R-60	**24**	0.016	0.016	0.015	0.015	0.014	0.014	0.014	0.013

Notes:

1. Continuous insulation shall be located at the ceiling, below the bottom chord of the truss and be uninterrupted by framing.
2. In climate zones 1 and 16 the insulating R-value of continuous insulation materials installed above the roofs waterproof membrane shall be multiplied by 0.8 before choosing the table column for determining assembly U-factor.

This table contains thermal performance data (U-factors) for wood framed attics where the ceiling provides the air barrier and the attic is ventilated. Wood trusses are the most common construction for low-rise residential buildings and for Type V nonresidential buildings. While the sketch shows a truss system with a flat ceiling, the data in this table may be used for scissor trusses and other non-flat trusses. If the bottom chord is not flat, then the slope should not exceed 4:12 for nonadhesive binder blown insulation. This table may also be used with composite trusses that have a wood top and bottom chord and metal struts connecting them.

For the majority of cases, values will be selected from column A of this table. Column A shall be used for the common situation where either batt or blown insulation is placed directly over the ceiling (and tapered at the edges). Builders or designers may increase thermal performance by adding a continuous insulation layer at the ceiling. The continuous insulation is typically a rigid polystyrene or polyisocyanurate foam insulation. Continuous insulation does not include the blown or batt insulation that is over the bottom chord of the truss (this is already accounted for in the U-factors published in Column A).

When this table is used manually, the R-value of continuous insulation shall be equal to or greater than the R-value published in the continuous insulation columns. For instance if the insulation is R-3, the R-2 column shall be used. No interpolation is permitted when data from the table is selected manually. CEC approved compliance software, including those used for prescriptive compliance, may accurately account for any amount of continuous insulation or for unusual construction assemblies using Equation 4-1 and Equation 4-2.

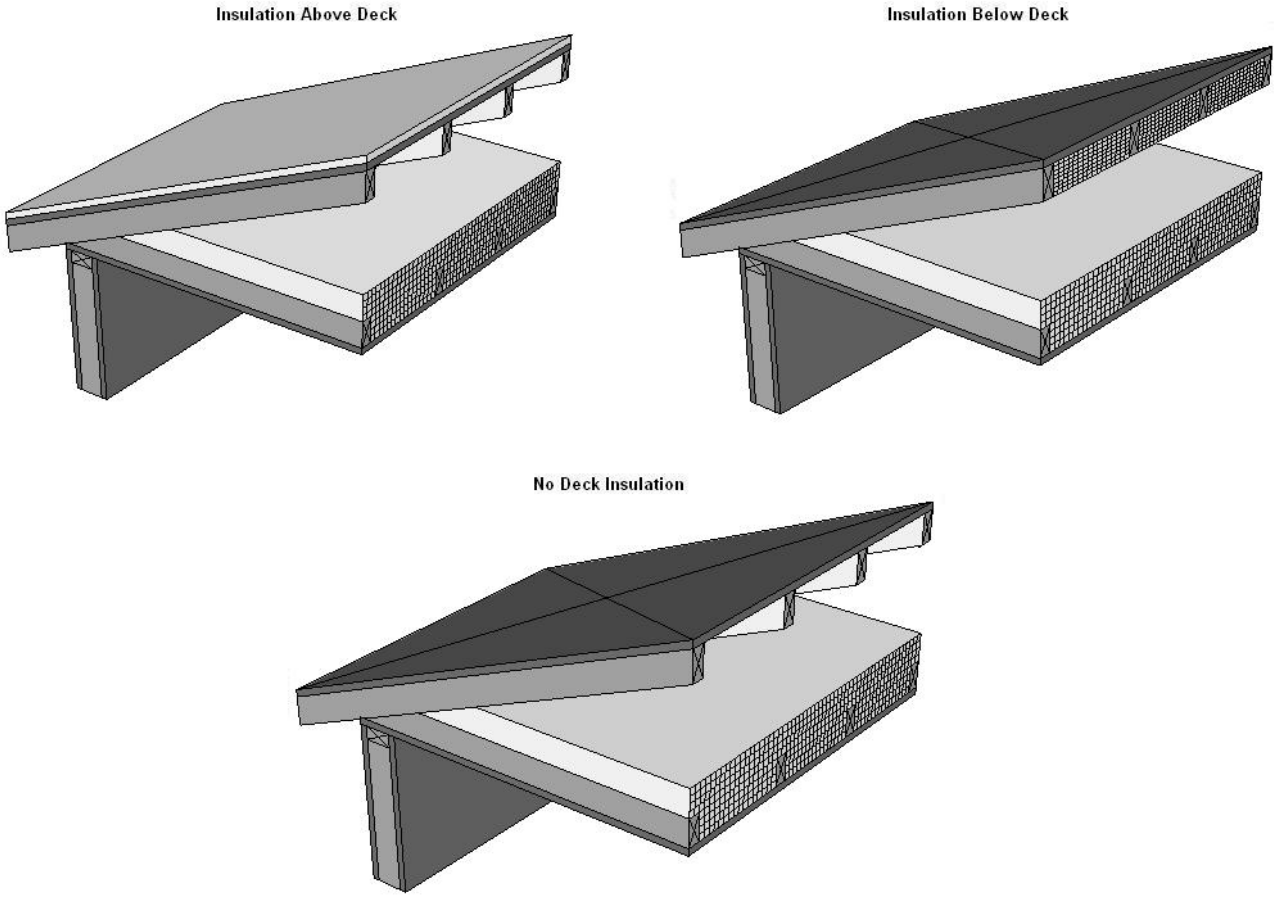

Figure 4.2.2 – Wood Framed Attic Roofs

This table shall not be used for cases where insulation is located at the roof of the attic. There are two situations where this may be done. Foamed plastic may be sprayed onto the top chord of the trusses and onto the bottom of the upper structural deck (roof). The foam expands and cures to provide an airtight barrier and continuous insulation. Another case is where a plastic membrane or netting is installed above the ceiling, (hanging below the roof deck) and either batt or blown insulation is installed over the netting. In both of these cases, the attic is sealed (not ventilated). There are a number of issues related to these insulation techniques and special CEC approval is required.

Assumptions: These data are calculated using the parallel path method documented in the 2009 ASHRAE Handbook of Fundamentals. These calculations assume an exterior air film of R-0.17, asphalt shingles of R-0.44 (AR02), building paper of R-0.06 (BP01), ½ inch of wood based sheathing (Custom), an attic air space (greater than 3.5 inch) with a R-0.80, the insulation / framing layer, continuous insulation (if any) 1/2 inch gypsum board (GP01) of R-0.45, and an interior air film (heat flow up) of R-0.61. Wood 2x4 framing is assumed at the ceiling level. R-13 of attic insulation is assumed between the framing members; above that level, attic insulation is uninterrupted by framing. The framing percentage is assumed to be 10 percent for 16

inch on center and 7 percent for 24 inch on center. 7.25 percent of the attic insulation above the framing members is assumed to be at half depth, due to decreased depth of insulation at the eaves.

Table 4.2.2 – U-factors of Wood Framed Rafter Roofs

Rafter Spacing	R-value of Cavity Insulation	Nominal Framing Size		Rated R-value of Continuous Insulation[5]							
				None	R-2	R-4	R-6	R-7	R-8	R-10	R-14
				A	B	C	D	E	F	G	H
16 in. OC	None	Any	**1**	0.297	0.186	0.136	0.107	0.096	0.088	0.075	0.058
	R-11[2]	2x4	**2**	0.084	0.072	0.063	0.056	0.053	0.050	0.046	0.039
	R-13[2]	2x4	**3**	0.075	0.065	0.058	0.052	0.049	0.047	0.043	0.037
	R-15[2]	2x4	**4**	0.068	0.060	0.053	0.048	0.046	0.044	0.040	0.035
	R-19[2]	2x4	**5**	0.075	0.065	0.058	0.052	0.049	0.047	0.043	0.037
	R-19[2,3]	2x4	**6**	0.062	0.055	0.050	0.045	0.043	0.041	0.038	0.033
	R-11	2x6	**7**	0.076	0.066	0.058	0.052	0.050	0.047	0.043	0.037
	R-13	2x6	**8**	0.069	0.061	0.054	0.049	0.047	0.044	0.041	0.035
	R-15	2x6	**9**	0.062	0.055	0.050	0.045	0.043	0.041	0.038	0.033
	R-19[2]	2x6	**10**	0.056	0.050	0.046	0.042	0.040	0.039	0.036	0.031
	R-21[2]	2x6	**11**	0.052	0.047	0.043	0.040	0.038	0.037	0.034	0.030
	R-19[2]	2x8	**12**	0.051	0.046	0.042	0.039	0.038	0.036	0.034	0.030
	R-21	2x8	**13**	0.048	0.044	0.040	0.037	0.036	0.035	0.032	0.029
	R-22	2x10	**14**	0.044	0.040	0.037	0.035	0.034	0.033	0.031	0.027
	R-25	2x10	**15**	0.041	0.038	0.035	0.033	0.032	0.031	0.029	0.026
	R-30[4]	2x10	**16**	0.036	0.034	0.031	0.030	0.029	0.028	0.026	0.024
	R-30	2x12	**17**	0.035	0.033	0.031	0.029	0.028	0.027	0.026	0.023
	R-38[4]	2x12	**18**	0.029	0.027	0.026	0.025	0.024	0.024	0.022	0.021
	R-38[4]	2x14	**19**	0.028	0.027	0.025	0.024	0.023	0.023	0.022	0.020
24 in. OC	None	Any	**25**	0.237	0.161	0.122	0.098	0.089	0.082	0.070	0.055
	R-11[2]	2x4	**26**	0.081	0.070	0.061	0.055	0.052	0.049	0.045	0.038
	R-13[2]	2x4	**27**	0.072	0.063	0.056	0.050	0.048	0.046	0.042	0.036
	R-15[2]	2x4	**28**	0.065	0.058	0.052	0.047	0.045	0.043	0.039	0.034
	R-19[2]	2x4	**29**	0.072	0.063	0.056	0.050	0.048	0.046	0.042	0.036
	R-19[2,3]	2x4	**30**	0.059	0.053	0.048	0.044	0.042	0.040	0.037	0.032
	R-11	2x6	**31**	0.075	0.065	0.058	0.052	0.049	0.047	0.043	0.037
	R-13	2x6	**32**	0.067	0.059	0.053	0.048	0.046	0.044	0.040	0.035
	R-15[2]	2x6	**33**	0.060	0.054	0.048	0.044	0.042	0.041	0.038	0.033
	R-19[2]	2x6	**34**	0.054	0.049	0.044	0.041	0.039	0.038	0.035	0.031
	R-21[2]	2x6	**35**	0.049	0.045	0.041	0.038	0.036	0.035	0.033	0.029
	R-19[2]	2x8	**36**	0.049	0.045	0.041	0.038	0.036	0.035	0.033	0.029
	R-21	2x8	**37**	0.046	0.042	0.039	0.036	0.035	0.034	0.032	0.028
	R-22	2x10	**38**	0.043	0.040	0.037	0.034	0.033	0.032	0.030	0.027
	R-25	2x10	**39**	0.039	0.036	0.034	0.032	0.031	0.030	0.028	0.025
	R-30[4]	2x10	**40**	0.034	0.032	0.030	0.028	0.027	0.027	0.025	0.023
	R-30	2x12	**41**	0.033	0.031	0.029	0.028	0.027	0.026	0.025	0.023
	R-38 [4]	2x12	**42**	0.028	0.027	0.025	0.024	0.023	0.023	0.022	0.020
	R-38[4]	2x14	**43**	0.027	0.026	0.024	0.023	0.023	0.022	0.021	0.020

Notes:

1. Rigid foam board used for cavity insulation must fill the entire cavity between the rafters and be sealed properly to prevent air gaps, and must be secured properly to prevent any future discrepancies in the construction assembly.

2. This assembly is only allowed where ventilation is provided between the bottom of the roof deck and the top of the insulation meeting CBC requirements or with enforcement agency official's approval of rafter attic assemblies with no ventilation air spaces.

3. This assembly requires insulation with an R-value per inch 5.6 or larger (k-factor 1.8 or less). This is board type insulation, mostly Isocyanurate. Medium density spray polyurethane foam may also be used to meet this requirement if the quality installation procedures and documentation in Reference Joint Appendix JA7 are followed, Documentation from Directory of Certified insulation materials must be provided to show compliance with this assembly.

4. Higher density fiberglass batt is needed to achieve the indicated U-factor. R-30 must be achieved with less than 8.25 inch full thickness. R-38 must be achieved with less than 10.25 inch thickness (R-30c, R-38c).

5. Continuous insulation shall be located at the ceiling or at the roof and be uninterrupted by framing. In climate zones 1 and 16 the insulating R-value of continuous insulation materials installed above the roofs waterproof membrane shall be multiplied by 0.8 before choosing the table column for determining assembly U-factor.

This table contains thermal performance data (U-factors) for wood framed rafter roofs. This is a common construction in low-rise residential buildings and in Type V nonresidential buildings. The rafters may be either flat or in a sloped application. Insulation is typically installed between the rafters. With this construction, the insulation is in contact with the ceiling and there is typically a one-inch air gap above the insulation so that moisture can be vented. Whether there is an air space above the insulation depends on local climate conditions and may not be required in some building permit jurisdictions. Filling the entire cavity of framed rafter assemblies with loose-fill mineral fiber and wool, cellulose, or ocSPF requires prior approval by the local building official.

For the majority of cases, U-factors will be selected from Column A of this table; this case covers insulation placed only in the cavity. When continuous insulation is installed either at the ceiling or at the roof, then U-factors from other columns may be selected. The continuous insulation is typically a rigid polystyrene or polyisocyanurate foam insulation, but can also include mineral wool or other suitable materials.

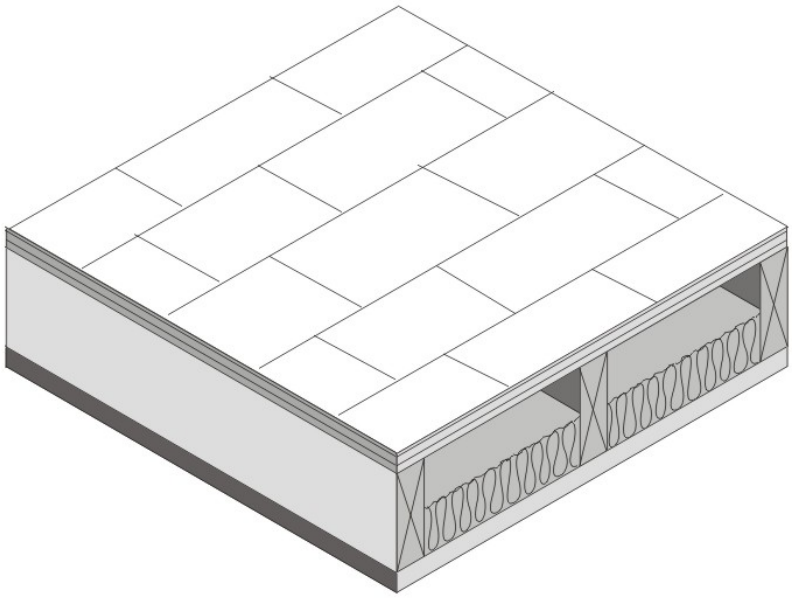

Figure4.2.3 – Wood Frame Rafter Roof

When this table is used manually, the R-value of continuous insulation shall be equal to or greater than the R-value published in the continuous insulation columns. For instance if the continuous insulation is R-3, the R-2 column shall be used. No interpolation is permitted when data from the table is used manually. CEC approved software, however, may determine the U-factor for any amount of continuous insulation and/or for layers using Equation 4-1 and Equation 4-2.

Assumptions: These data are calculated using the parallel path method documented in the 2009 ASHRAE Handbook of Fundamentals. These calculations assume an exterior air film of R-0.17, asphalt shingles of R-0.44 (AR02), building paper of R-0.06 (BP01), ½ inch of wood based sheathing (Custom), continuous insulation (optional), the insulation / framing layer with an air space of R-0.76 or R-0.80 (except for loose-fill mineral fiber and wool, cellulose, ccSPF, and ocSPF), 1/2 inch gypsum of R-0.45 (GP01), and an interior air film (heat flow up diagonally) of R-0.62. The continuous insulation may also be located at the ceiling, between the drywall and the framing. The framing percentage is assumed to be 10 percent for 16 inch OC and 7 percent for 24 inch. OC. The thickness of framing members is assumed to be the actual size of 3.50, 5.50, 7.25, 9.25, and 11.25 inches for 2x4, 2x6, 2x8, 2x10, and 2x12 nominal sizes. High-density batt insulation is assumed to be 8.5 inch thick for R-30 and 10.5 inch thick for R-38. The R-value of sprayed foam and cellulose insulation is assumed to be R-3.6 per inch.

Table 4.2.3 – U-factors of Structurally Insulated Panels (SIPS) Roof/Ceilings

Wood Framing Connection Type (spline)	Insulation Core R-value[1]	Typical Panel Thickness		Rated R-value of Continuous Insulation [4,5]			
				None	R-2	R-4	R-5
				A	B	C	D
OSB	R-22	6.5 in	**1**	0.041	0.038	0.035	0.034
Single 2x	R-22	6.5 in	**2**	0.044	0.040	0.037	0.036
Double 2x	R-22	6.5 in	**3**	0.046	0.042	0.038	0.037
I-joist	R-22	6.5 in	**4**	0.043	0.039	0.036	0.035
OSB	R-28	8.25 in	**5**	0.033	0.031	0.029	0.028
Single 2x	R-28	8.25 in	**6**	0.034	0.032	0.030	0.029
Double 2x	R-28	8.25 in	**7**	0.037	0.034	0.031	0.030
I-joist	R-28	8.25 in	**8**	0.033	0.310	0.029	0.028
OSB	R-33[2]	6.5 in	**9**	0.030	0.027	0.026	0.025
Single 2x	R-33[2]	6.5 in	**10**	0.031	0.029	0.027	0.026
Double 2x	R-33[2]	6.5 in	**11**	0.034	0.031	0.029	0.028
I-joist	R-33[2]	6.5 in	**12**	0.031	0.028	0.027	0.026
OSB	R-36	10.25 in	**13**	0.026	0.025	0.024	0.023
Single 2x	R-36	10.25 in	**14**	0.028	0.026	0.025	0.024
Double 2x	R-36	10.25 in	**15**	0.029	0.028	0.026	0.025
I-joist	R-36	10.25 in	**16**	0.027	0.025	0.024	0.023
OSB	R-44	12.25 in	**17**	0.021	0.020	0.019	0.019
Single 2x	R-44	12.25 in	**18**	0.023	0.022	0.021	0.021
Double 2x	R-44	12.25 in	**19**	0.025	0.023	0.022	0.022
I-joist	R-44	12.25 in	**20**	0.022	0.021	0.020	0.020
OSB	R-55[3]	10.25 in	**21**	0.017	0.016	0.016	0.016
Single 2x	R-55[3]	10.25 in	**22**	0.019	0.018	0.018	0.018
Double 2x	R-55[3]	10.25 in	**23**	0.021	0.020	0.019	0.019
I-joist	R-55[3]	10.25 in	**24**	0.018	0.017	0.017	0.017
Steel Framing	R-14	48 in	**25**	0.075	0.065	0.058	0.055
	R-22	48 in	**26**	0.057	0.051	0.046	0.044
	R-28	48 in	**27**	0.047	0.043	0.040	0.039
	R-36	48 in	**28**	0.043	0.040	0.037	0.036

NOTES:

1. The insulation R-value must be at least R-21.7 in order to use this table. This table assumes moulded expanded polystyrene (EPS) unless noted
   otherwise. Although other insulation types are used by some SIP manufacturers, such as polyurethane and extruded expanded insulation (XPS),
   EPS is the most common insulation used in SIP construction.
2. R-33.2 is achievable using polyurethane insulation in 6.5" panels.
3. R-55.3 is achievable using polyurethane insulation in 10.25" panels.
4. Continuous insulation shall be at least R-2 and may be installed on either the inside or the exterior of the roof/ceiling.
5. In climate zones 1 and 16 the insulating R-value of continuous insulation materials installed above the roof waterproof membrane shall be multiplied times 0.8 before choosing the table column for determining assembly U-factor.

Structural insulated panels (SIPs) consist of a rigid insulation core, securely bonded between two structural facings, to form a structural sandwich panel. SIPs are considered a non-framed assembly usually with little or

no structural framing that penetrates the insulation layer, resulting in less thermal bridging across the insulation when compared to a conventional framed assembly.

This table gives U-factors for structurally insulated panels used in ceiling and roof constructions. Data is provided for three variations of this system. The system labeled “Wood Framing” uses wood spacers to separate the plywood or OSB boards and provide a means to connect the panels with mechanical fasteners. The system labeled “Steel Framing” uses steel framing members and mechanical fasteners at the joints. The system labeled “OSB Spline” uses splines to connect the panels so that framing members do not penetrate the insulation.

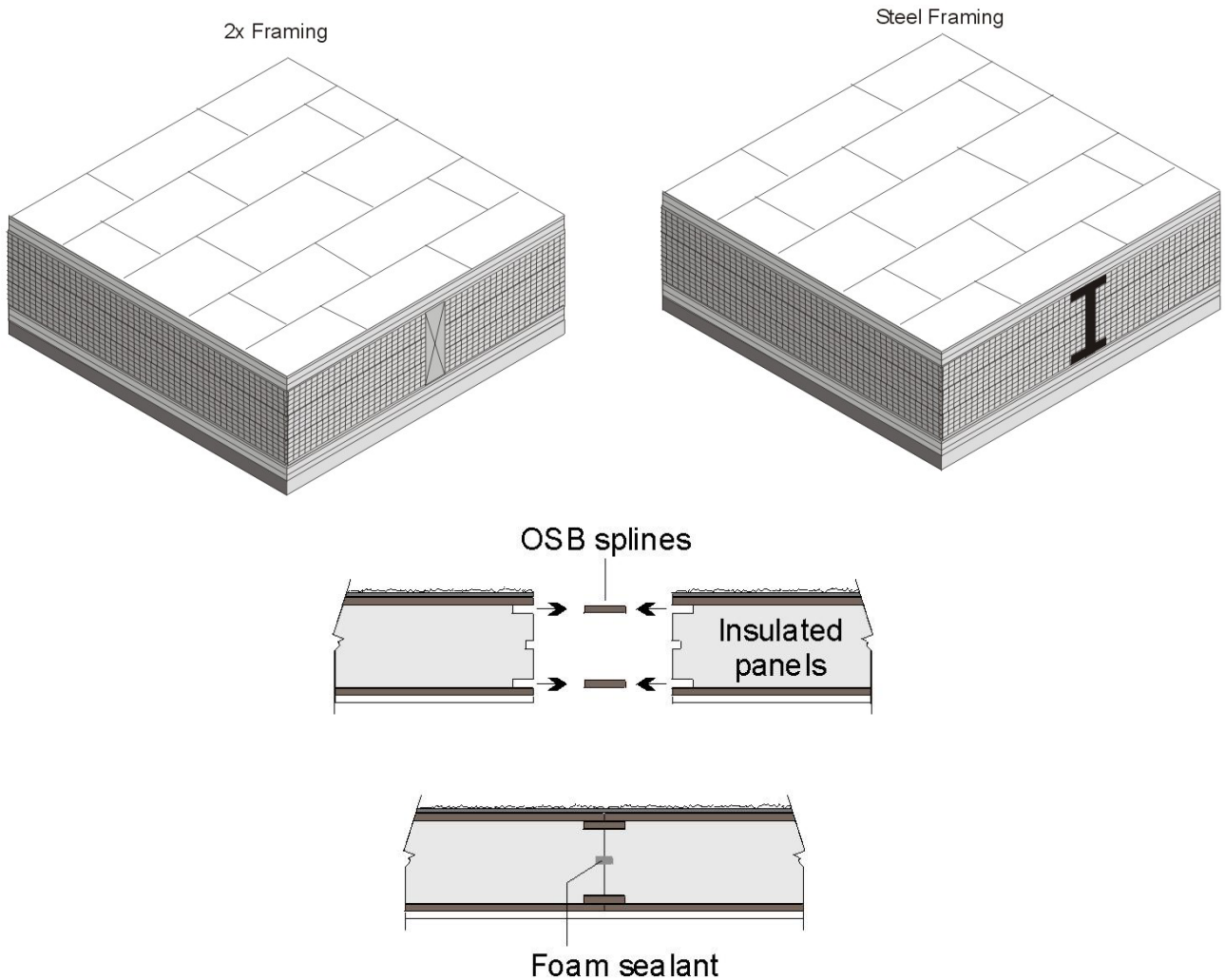

Figure 4.2.4 – SIPS Roof/Ceiling

Data from Column A will be used in most cases, since it is quite unusual to add continuous insulation to a panel that is basically all insulation anyway. If insulation is added, however, then the U-factor is selected from one of the other columns. If the tables are used manually, then the installed insulation shall have a thermal resistance at least as great as the column selected. When the table is used with CEC approved compliance software, then the R-value of any amount of continuous insulation may be accounted for along with the thermal resistance of special construction layers may be accounted for using Equation 4-1 and Equation 4-2.

Assumptions: The wood framing and OSB spline data are calculated using the parallel path method documented in the 2009 ASHRAE Handbook of Fundamentals. Assemblies with metal framing are calculated using the ASHRAE Zone Calculation Method which is also documented in the 2005 ASHRAE Handbook of

Fundamentals. These calculations assume an exterior air film of R-0.17, asphalt shingles of R-0.44 (AR02), building paper of R-0.06 (BP01), 7/16 inch of OSB of R-0.69, the rigid insulation of R-3.85 per inch, another layer of 7/16 inch of OSB, ½ inch gypsum board of R-0.45 (GP01), an R-value of 0.99 per inch is assumed for the wood frame and an interior air film (heat flow up diagonally) of R-0.62. If an additional layer of insulation is used, this may be installed on either the interior or exterior of the SIPS panel assembly.

Table 4.2.4 – U-factors of Metal Framed Attic Roofs

Spacing	Nominal Framing Size	Cavity Insulation R-Value:		Rated R-value of Continuous Insulation[1]							
				R-0	R-2	R-4	R-6	R-7	R-8	R-10	R-14
				A	B	C	D	E	F	G	H
16 in. OC	Any	None	**1**	0.328	0.198	0.142	0.111	0.100	0.091	0.077	0.059
	2 x 4	R-11	**2**	0.126	0.101	0.084	0.072	0.067	0.063	0.056	0.046
	(3.65 in.)	R-13	**3**	0.121	0.097	0.082	0.070	0.066	0.061	0.055	0.045
		R-19	**4**	0.071	0.062	0.055	0.050	0.047	0.045	0.042	0.036
		R-21	**5**	0.063	0.056	0.050	0046	0.044	0.042	0.039	0.033
		R-22	**6**	0.059	0.053	0.048	0.044	0.042	0.040	0.037	0.032
		R-25	**7**	0.051	0.046	0.042	0.039	0.038	0.036	0.034	0.030
		R-30	**8**	0.041	0.038	0.035	0.033	0.032	0.031	0.029	0.026
		R-38	**9**	0.031	0.029	0.028	0.026	0.025	0.025	0.024	0.022
		R-44	**10**	0.027	0.026	0.024	0.023	0.023	0.022	0.021	0.020
		R-49	**11**	0.024	0.023	0.022	0.021	0.021	0.020	0.019	0.018
		R-60	**12**	0.019	0.018	0.018	0.017	0.017	0.016	0.016	0.015
24 in. OC	Any	None	**13**	0.324	0.197	0.141	0.110	0.099	0.090	0.076	0.059
	2 x 4	R-11	**14**	0.109	0.089	0.076	0.066	0.062	0.058	0.052	0.043
	(3.65 in.)	R-13	**15**	0.103	0.085	0.073	0.064	0.060	0.056	0.051	0.042
		R-19	**16**	0.065	0.058	0.052	0.047	0.045	0.043	0.039	0.034
		R-21	**17**	0.058	0.052	0.047	0.043	0.041	0.040	0.037	0.032
		R-22	**18**	0.055	0.050	0.045	0.041	0.040	0.038	0.035	0.031
		R-25	**19**	0.047	0.043	0.040	0.037	0.035	0.034	0.032	0.028
		R-30	**20**	0.039	0.036	0.034	0.032	0.031	0.030	0.028	0.025
		R-38	**21**	0.030	0.028	0.027	0.025	0.025	0.024	0.023	0.021
		R-44	**22**	0.026	0.025	0.024	0.022	0.022	0.022	0.021	0.019
		R-49	**23**	0.023	0.022	0.021	0.020	0.020	0.019	0.019	0.017
		R-60	**24**	0.019	0.018	0.018	0.017	0.017	0.016	0.016	0.015

Notes:

1 Continuous insulation shall be located at the ceiling or at the roof and be uninterrupted by framing.

2. In climate zones 1 and 16 the insulating R-value of continuous insulation materials installed above the roofs waterproof membrane shall be multiplied by 0.8 before choosing the table column for determining assembly U-factor.

This table contains U-factors for metal-framed attic roofs, where the ceiling is the air barrier and the attic is ventilated. This construction assembly is similar to those that are covered by Table 4.2.1, except that metal framing members are substituted for the wood-framing members. The top chord of the truss is typically sloped, while the bottom chord is typically flat. Data from this table may be used for cases where the bottom chord of the truss is sloped. If the bottom chord slopes more than 4:12, nonadhesive binder blown insulation must not be used.

For the majority of cases, values will be selected from column A of this table. Column A applies for the common situation where either batt or blown insulation is placed directly over the ceiling. Builders or designers may increase thermal performance by adding a continuous insulation layer at the ceiling. The continuous insulation is typically a rigid polystyrene or polyisocyurnate foam insulation. Continuous insulation does not include the blown or batt insulation that is over the bottom chord of the truss (this is already accounted for in the first column data).

When this table is used manually, the R-value of continuous insulation shall be equal to or greater than the R-value published in the continuous insulation columns. No interpolation is permitted when data from the table is used manually. CEC approved software, however, may determine the U-factor for any amount of continuous insulation and for unusual construction layers using Equation 4-1 and Equation 4-2.

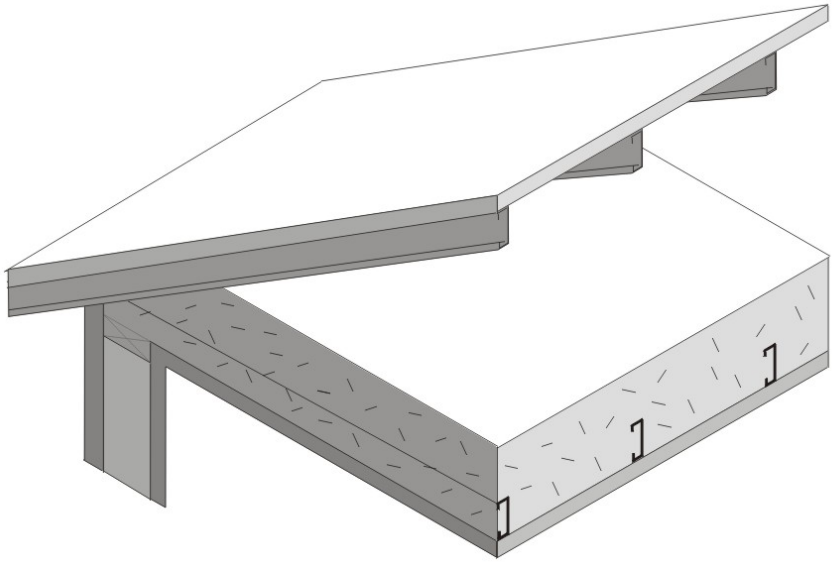

Figure 4.2.5 – Metal Framed Attic Roofs

Assumptions: These data are calculated using the zone method calculation documented in the 2009 ASHRAE Handbook of Fundamentals. These calculations assume an exterior air film of R-0.17, asphalt shingles of R-0.44 (AR02), building paper of R-0.06 (BP01), ½ inch of wood based sheathing (Custom), the attic air space (greater than 3.5 inch) of R-0.80, the insulation / framing layer, continuous insulation (if any) 1/2 inch gypsum of R-0.45 (GP01), and an interior air film (heat flow up) of R-0.61. The framing percentage is assumed to be 10 percent for 16 inch on center and 7 percent for 24 inch on center 7.25 percent of the attic insulation above the framing members is assumed to be at half depth, due to decreased depth of insulation at the eaves. Steel framing has 1.5 inch flange and is 0.0747 inch thick steel with no knockouts. U-factors calculated using EZ Frame 2.0.

Table 4.2.5 – U-factors of Metal Framed Rafter Roofs

Spacing	R-Value of Insulation Between Framing	Nominal Framing Size		Rated R-value of Continuous Insulation							
				R-0	R-2	R-4	R-6	R-7	R-8	R-10	R-14
				A	B	C	D	E	F	G	H
16 in. OC	None	Any	**1**	0.325	0.197	0.141	0.110	0.099	0.090	0.076	0.059
	R-11[2]	2x4	**2**	0.129	0.103	0.085	0.073	0.068	0.063	0.056	0.046
	R-13[2]	2x4	**3**	0.121	0.097	0.082	0.070	0.066	0.061	0.055	0.045
	R-15[2]	2x4	**4**	0.115	0.093	0.079	0.068	0.064	0.060	0.053	0.044
	R-19[2,3]	2x4	**5**	0.121	0.097	0.082	0.070	0.066	0.061	0.055	0.045
	R-11	2x6	**6**	0.123	0.099	0.082	0.071	0.066	0.062	0.055	0.045
	R-13	2x6	**7**	0.115	0.093	0.079	0.068	0.064	0.060	0.053	0.044
	R-15[2]	2x6	**8**	0.101	0.084	0.072	0.063	0.059	0.056	0.050	0.042
	R-19[2]	2x6	**9**	0.100	0.083	0.071	0.063	0.059	0.056	0.050	0.042
	R-19[2]	2x8	**10**	0.096	0.081	0.069	0.061	0.057	0.054	0.049	0.041
	R-21	2x8	**11**	0.093	0.078	0.068	0.060	0.056	0.053	0.048	0.040
	R-25	2x10	**12**	0.084	0.072	0.063	0.056	0.053	0.050	0.046	0.039
	R-30[4]	2x10	**13**	0.079	0.068	0.060	0.054	0.051	0.048	0.044	0.038
	R-30	2x12	**14**	0.076	0.066	0.058	0.052	0.050	0.047	0.043	0.037
	R-38 [4]	2x12	**15**	0.071	0.062	0.055	0.050	0.047	0.045	0.042	0.036
	R-38 [4]	2x14	**16**	0.068	0.060	0.053	0.048	0.046	0.044	0.040	0.035
24 in. OC	None	Any	**22**	0.322	0.196	0.141	0.110	0.099	0.090	0.076	0.058
	R-11[2]	2x4	**23**	0.111	0.091	0.077	0.067	0.062	0.059	0.053	0.043
	R-13[2]	2x4	**24**	0.102	0.085	0.072	0.063	0.060	0.056	0.050	0.042
	R-15[2]	2x4	**25**	0.096	0.081	0.069	0.061	0.057	0.054	0.049	0.041
	R-19[2,3]	2x4	**26**	0.102	0.085	0.072	0.063	0.060	0.056	0.050	0.042
	R-11	2x6	**27**	0.107	0.088	0.075	0.065	0.061	0.058	0.052	0.043
	R-13	2x6	**28**	0.099	0.083	0.071	0.062	0.058	0.055	0.050	0.041
	R-15[2]	2x6	**29**	0.086	0.073	0.064	0.057	0.054	0.051	0.046	0.039
	R-19[2]	2x6	**30**	0.083	0.071	0.062	0.055	0.052	0.050	0.045	0.038
	R-19[2]	2x8	**31**	0.080	0.0690	0.061	0.054	0.051	0.049	0.044	0.038
	R-21	2x8	**32**	0.076	0.066	0.058	0.052	0.050	0.047	0.043	0.037
	R-25	2x10	**33**	0.068	0.060	0.053	0.048	0.046	0.044	0.040	0.035
	R-30[4]	2x10	**34**	0.063	0.056	0.050	0.046	0.044	0.042	0.039	0.033
	R-30	2x12	**35**	0.061	0.054	0.049	0.045	0.043	0.041	0.038	0.033
	R-38[4]	2x12	**36**	0.055	0.050	0.045	0.041	0.040	0.038	0.035	0.031
	R-38[4]	2x14	**37**	0.053	0.048	0.044	0.040	0.039	0.037	0.035	0.030

Notes:

1. Rigid foam board used for cavity insulation must fill the entire cavity between the rafters and be sealed properly to prevent air gaps, and must be secured properly to prevent any future discrepancies in the construction assembly.

2. This assembly is only allowed where ventilation is provided between the bottom of the roof deck and the top of the insulation meeting, CBC requirements or enforcement agency officials approval of rafter attic assemblies with no ventilation air spaces.

3. This assembly requires insulation with an R-value per inch 5.6 or larger (k-factor 1.8 or less). This is board type insulation, mostly Isocyanurate. Medium density spray polyurethane foam may also be used to meet this requirement if the quality installation procedures and documentation in Joint Appendix 7 are followed. Documentation from Directory of Certified insulation materials must be provided to show compliance with this assembly.

4. Higher density fiberglass batt is needed to achieve the indicated U-factor. R-30 must be achieved with less than 8.25 inch full thickness. R-38 must be achieved with less than 10.25 inch thickness (R-30c, R-38c).

This table contains pre-calculated U-factors for metal-framed rafter roofs where the ceiling is the air barrier. This construction assembly is similar to that covered by Table 4.2.2 except that metal framing members are substituted for the wood-framing members. The rafters may be either flat or in a sloped application. Insulation is typically installed between the rafters. With this construction, the insulation is in contact with the ceiling and there is typically a one-inch air gap above the insulation so that moisture can be vented. Whether there is an air space above the insulation depends on local climate conditions and may not be required in some building permit jurisdictions.

U-factors are selected from Column A of this table when there is no continuous insulation. When continuous insulation is installed either at the ceiling or at the roof, then U-factors from other columns may be selected. The continuous insulation is typically a rigid polystyrene or polyisocyanurate foam insulation, but can also include mineral wool or other suitable materials.

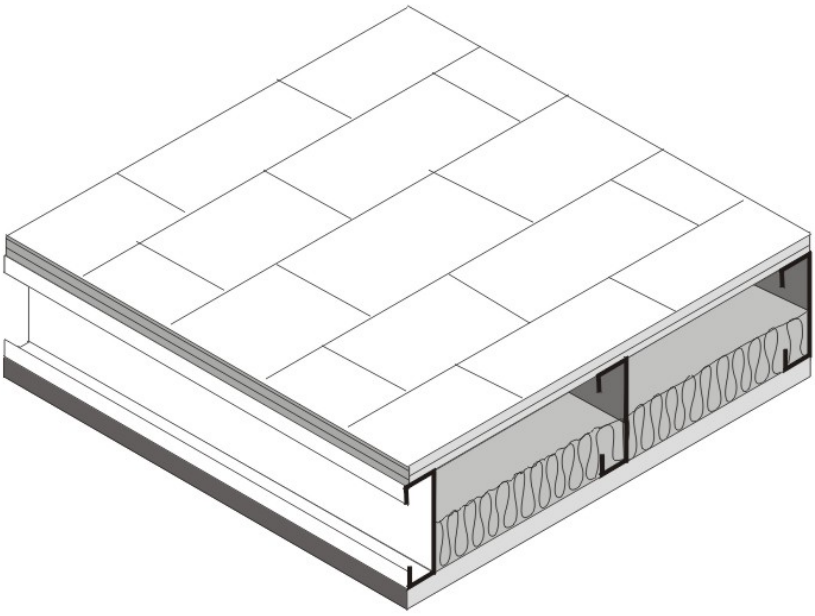

Figure 4.2.6 – Metal Framed Rafter Roof

When this table is used manually, the R-value of continuous insulation shall be equal to or greater than the R-value published in the continuous insulation columns. For instance if the insulation is R-3, the R-2 column shall be used. No interpolation is permitted when data from the table is used manually. CEC approved software, however, may determine the U-factor for any amount of continuous insulation and/or for unusual construction layers using Equation 4-1 and Equation 4-2.

Assumptions: These data are calculated using the zone calculation method documented in the 2009 ASHRAE Handbook of Fundamentals. These calculations assume an exterior air film of R-0.17, asphalt shingles of R-0.44 (AR02), building paper of R-0.06 (BP01), ½ inch of wood based sheathing (Custom), the insulation / framing layer, ½ inch gypsum of R-0.45 (GP01), and an interior air film (heat flow up diagonally) of R-0.62 The continuous insulation may either be located at the ceiling or over the structural deck. The thickness of framing members is assumed to be 3.50, 5.50, 7.25, 9.25, and 11.25 inch for 2x4, 2x6, 2x8, 2x10, and 2x12 nominal sizes. High-density batt insulation is assumed to be 8.5 in. thick for R-30 and 10.5 in thick for R-38. Framing spacing is 10 percent for 16 inches on center and 7 percent for 24 inches on center. Steel framing has 1.5 inch flange and is 0.075 inch thick steel with no knockouts. U-factors calculated using EZ Frame 2.0.

Table 4.2.6 –U-factors for Span Deck and Concrete Roofs

			R-value of Continuous Insulation									
			None	R-4	R-6	R-8	R-10	R-12	R-15	R-20	R-25	R-30
Fireproofing	**Concrete Topping Over Metal Deck**		**A**	**B**	**C**	**D**	**E**	**F**	**G**	**H**	**I**	**J**
Yes	None	**1**	0.348	0.145	0.113	0.092	0.078	0.067	0.056	0.044	0.036	0.030
	2 in.	**2**	0.324	0.141	0.110	0.090	0.076	0.066	0.055	0.043	0.036	0.030
	4 in.	**3**	0.302	0.137	0.107	0.088	0.075	0.065	0.055	0.043	0.035	0.030
	6 in.	**4**	0.283	0.133	0.105	0.087	0.074	0.064	0.054	0.042	0.035	0.030
No	None	**5**	0.503	0.167	0.125	0.100	0.083	0.071	0.059	0.045	0.037	0.031
	2 in.	**6**	0.452	0.161	0.122	0.098	0.082	0.070	0.058	0.045	0.037	0.031
	4 in.	**7**	0.412	0.156	0.119	0.096	0.080	0.069	0.057	0.045	0.036	0.031
	6 in.	**8**	0.377	0.150	0.116	0.094	0.079	0.068	0.057	0.044	0.036	0.031

1. In climate zones 1 and 16 the insulating R-value of continuous insulation materials installed above the roof waterproof membrane shall be multiplied by 0.8 before choosing the table column for determining assembly U-factor.

The constructions in this table are typical of Type I and Type II steel framed or concrete nonresidential buildings. The construction consists of a metal deck with or without a concrete topping. It may also be used for a metal deck or even wood deck ceiling as long as the insulation is continuous. Fireproofing may be sprayed onto the underside of the metal deck; it also covers steel structural members. Insulation is typically installed above the structural deck and below the waterproof membrane. This table may also be used for reinforced concrete roofs that do not have a metal deck. In this case, the fireproofing will typically not be installed and choices from the table should be made accordingly.

When this table is used manually, the R-value of continuous insulation shall be equal to or greater than the R-value published in the continuous insulation columns. No interpolation is permitted when data from the table is used manually. CEC approved compliance software, however, may determine the U-factor for any amount of continuous insulation and for unusual construction layers using Equation 4-1 and Equation 4-2. If the data is adjusted using Equation 4-2, the user shall take credit for a ceiling and the air space above the ceiling only if the ceiling serves as an air barrier. Suspended or T-bar ceilings do not serve as air barriers.

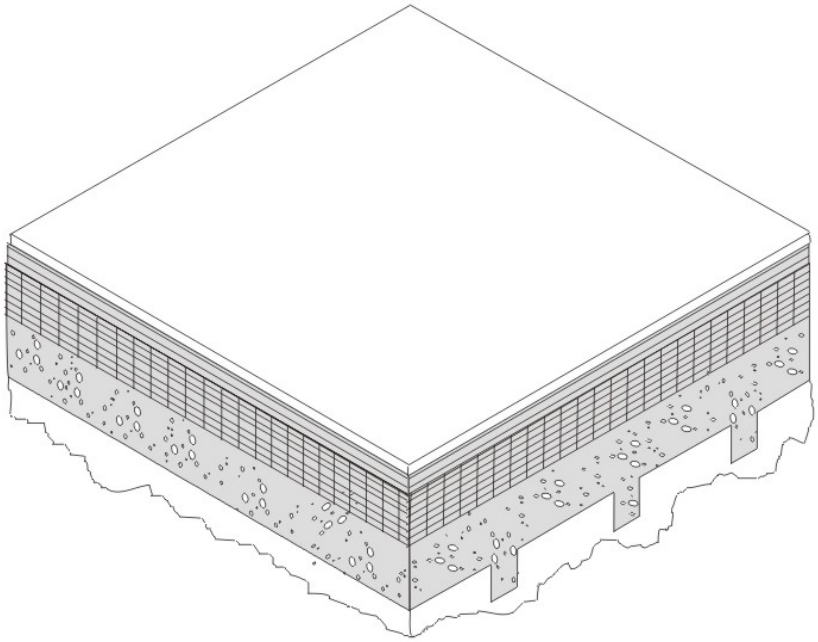

Figure 4.2.7 – Span Deck and Concrete Roof

Assumptions: These calculations are made using the parallel path method documented in the 2009 ASHRAE Handbook of Fundamentals. The assembly is assumed to consist of an exterior air film of R-0.17, a single ply roofing membrane (R-0.15), protective board (R-1.06), continuous insulation (if any), concrete topping with a density of 120 lb/ft and an R-value of 0.11 per inch (if any), metal span deck (negligible), and fireproofing (R-0.88). While a suspended ceiling typically exists below the structure, this is not considered part of the construction assembly therefore the same U-values are used for assemblies with or without suspended ceilings. The fireproofing is assumed to be equivalent to 60 lb/ft^3 concrete with a resistance of 0.44 per inch.

Table 4.2.7 – U-factors for Metal Building Roofs

			Rated R-value of Continuous Insulation									
			R-0	R-4	R-6	R-8	R-10	R-12	R-15	R-20	R-25	R-30
Insulation System	**R-Value of Insulation**		**A**	**B**	**C**	**D**	**E**	**F**	**G**	**H**	**I**	**J**
Screw Down Roofs (no Thermal Blocks)[2]	None	**1**	1.280	0.209	0.147	0.114	0.093	0.078	0.063	0.048	0.039	0.032
	R-10	**2**	0.153	0.095	0.080	0.069	0.060	0.054	0.046	0.038	0.032	0.027
	R-11	**3**	0.139	0.089	0.076	0.066	0.058	0.052	0.045	0.037	0.031	0.027
	R-13	**4**	0.130	0.086	0.073	0.064	0.057	0.051	0.044	0.036	0.031	0.027
	R-19	**5**	0.098	0.070	0.062	0.055	0.049	0.045	0.040	0.033	0.028	0.025
Standing Seam Roof with Single Layer of Insulation Draped over Purlins and Compressed. Thermal blocks at supports.[2]	R-10	**6**	0.097	0.070	0.061	0.055	0.049	0.045	0.040	0.033	0.028	0.025
	R-11	**7**	0.092	0.067	0.059	0.053	0.048	0.044	0.039	0.032	0.028	0.024
	R-13	**8**	0.083	0.062	0.055	0.050	0.045	0.042	0.037	0.031	0.027	0.024
	R-19	**9**	0.065	0.052	0.047	0.043	0.039	0.037	0.033	0.028	0.025	0.022
Standing Seam Roof with Double Layer of Insulation.[3]Thermal blocks at supports.[2]	R-10 + R-10	**10**	0.063	0.050	0.046	0.042	0.039	0.036	0.032	0.028	0.024	0.022
	R-10 + R-11	**11**	0.061	0.049	0.045	0.041	0.038	0.035	0.032	0.027	0.024	0.022
	R-11 + R-11	**12**	0.060	0.048	0.044	0.041	0.038	0.035	0.032	0.027	0.024	0.021
	R-10 + R-13	**13**	0.058	0.047	0.043	0.040	0.037	0.034	0.031	0.027	0.024	0.021
	R-11 + R-13	**14**	0.057	0.046	0.042	0.039	0.036	0.034	0.031	0.027	0.024	0.021
	R-13 + R-13	**15**	0.055	0.045	0.041	0.038	0.035	0.033	0.030	0.026	0.023	0.021
	R-10 + R-19	**16**	0.052	0.043	0.040	0.037	0.034	0.032	0.029	0.025	0.023	0.020
	R-11 + R-19	**17**	0.051	0.042	0.039	0.036	0.034	0.032	0.029	0.025	0.022	0.020
	R-13 + R-19	**17**	0.049	0.041	0.038	0.035	0.033	0.031	0.028	0.025	0.022	0.020
	R-19 + R-19	**18**	0.046	0.039	0.036	0.034	0.032	0.030	0.027	0.024	0.021	0.019
Filled Cavity with Thermal Blocks[2, 4]	R19 + R-10	**19**	0.041	0.035	0.033	0.031	0.029	0.027	0.025	0.023	0.020	0.018

Notes:

1. A roof must have metal purlins no closer than 4 ft on center to use this table. If the roof deck is attached to the purlins more frequently than 12 in oc, 0.008 must be added to the U-factors in this table.
2. Thermal blocks are an R-5 of rigid insulation, which extends 1" beyond the width of the purlin on each side.
3. Multiple R-values are listed in order from outside to inside. First layer is parallel to the purlins, and supported by a system; second layer is laid on top of the purlins.
4. In climate zones 1 and 16 the insulating R-value of continuous insulation materials installed above the roof waterproof membrane shall be multiplied times 0.8 before choosing the table column for determining assembly U-factor.

The U-factors in this table are intended for use with metal building roofs. This type of construction is typical for manufacturing and warehouse facilities, but is used for other building types as well. The typical method of insulating this type of building is to drape vinyl backed fiberglass insulation over the metal purlins before the metal deck is attached with metal screws. With this method, the insulation is compressed at the supports, reducing its effectiveness. The first part of the table contains values for this insulation technique. The second section of the table has data for the case when a thermal block is used at the support. The insulation is still compressed, but the thermal block, which generally consists of an 8 inch wide strip of foam insulation, improves the thermal performance. The third section of the table deals with systems that involve two layers of insulation.

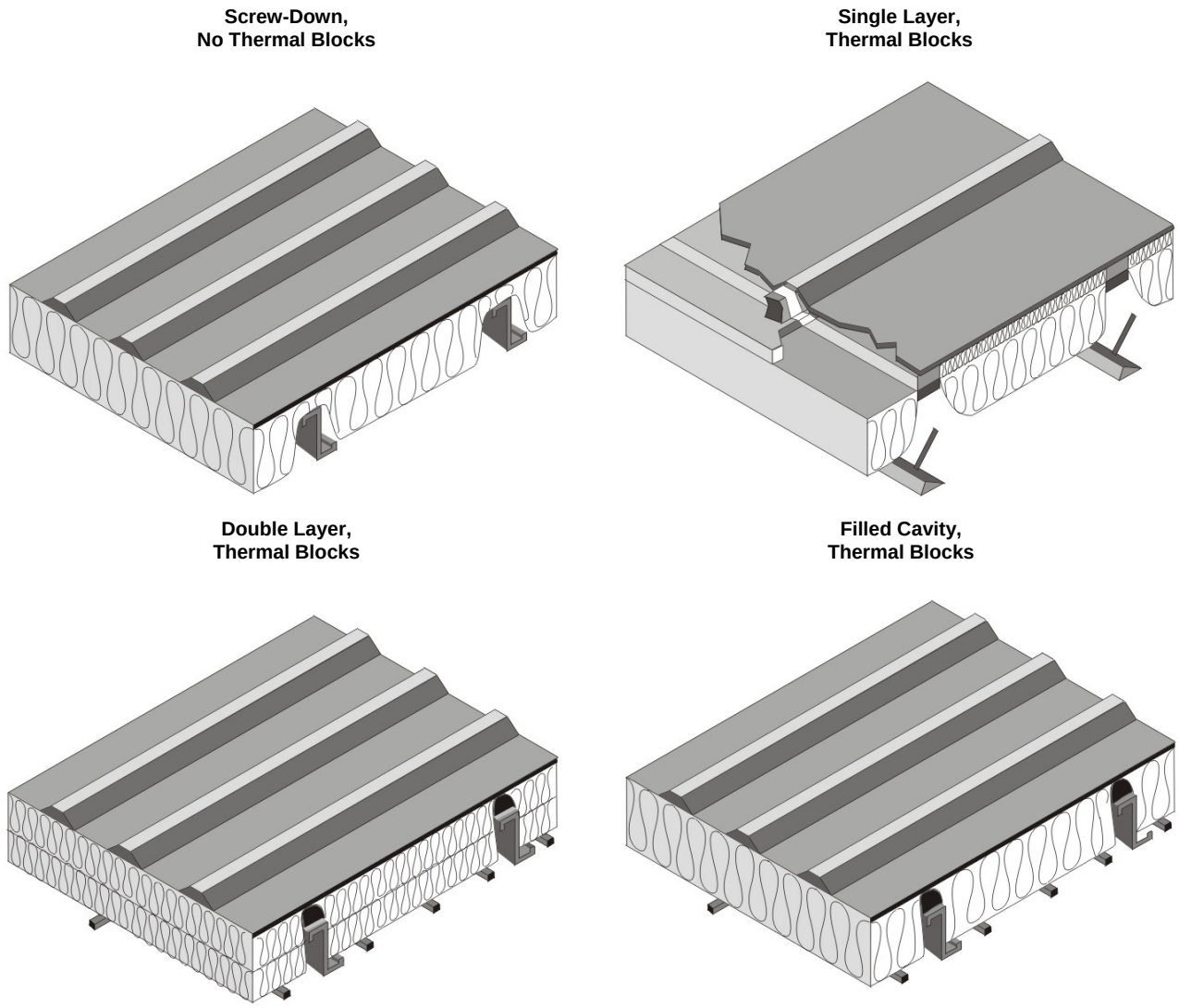

Figure 4.2.8 – Metal Building Roofs

For the majority of cases, values will be selected from column A of this table. Builders or designers may increase thermal performance by adding a continuous insulation layer between the metal decking and the structural supports. The continuous insulation is typically a rigid polystyrene or polyisocyanurate foam insulation.

When this table is used manually, the R-value of continuous insulation shall be equal to or greater than the R-value published in the continuous insulation columns. No interpolation is permitted when data from the table is used manually. CEC approved compliance software, however, may determine the U-factor for any amount of continuous insulation using Equation 4-1.

Assumptions: Data in Column A of this table is taken from the ASHRAE/IESNA Standard 90.1-2004, Appendix A. The data is also published in the NAIMA *Compliance for Metal Buildings*, 1997.

Table 4.2.8 – U-factors for Insulated Ceiling with Removable Panels

R-value of Insulation Over Suspended Ceiling		U-factor A
None	**1**	0.304
7	**2**	0.152
11	**3**	0.132
13	**4**	0.126
19	**5**	0.113
21	**6**	0.110
22	**7**	0.109
30	**8**	0.102
38	**9**	0.098
49	**10**	0.094
60	**11**	0.092

This table includes U-factors for the case of insulation placed over suspended ceilings. This situation is only permitted for a combined floor area no greater than 2,000 square feet in an otherwise unconditioned building, and when the average height of the space between the ceiling and the roof over these spaces is greater than 12 feet. The suspended ceiling does not provide an effective air barrier and leakage is accounted for in the calculations.

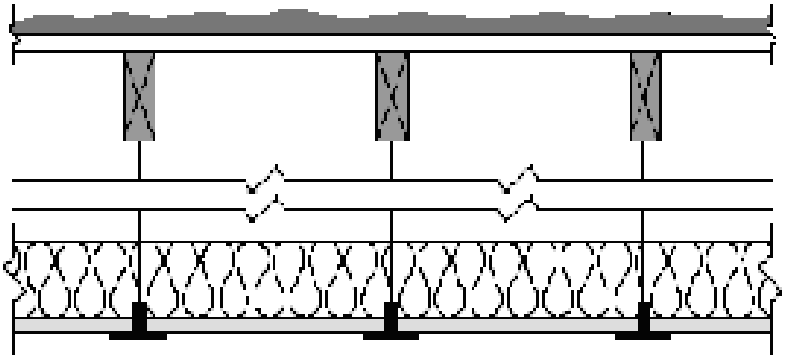

Figure 4.2.9 – Insulated Ceiling with Removable Panels

Assumptions: These calculations assume an exterior air film of R-0.17, a built-up roof of R-0.33 (BR01), ¾ inch wood based sheathing (Custom), a twelve foot air space of R-0.80, the insulation (for the insulated portion), removable ceiling panels with a R-0.50 and an interior air film (heat flow up) of R-0.61. 75 percent of the ceiling is assumed covered by insulation and the remainder is not insulated. The uninsulated portion includes lighting fixtures and areas where the insulation is not continuous. A correction factor of 0.005 is added to the resulting U-factor to account for infiltration through the suspended ceiling and lighting fixtures.

Table 4.2.9 – U-factors of Insulated Metal Panel Roofs and Ceilings

		U-factor (Btu/^{0}F-ft^2)
Panel Thickness		**A**
2”	**1**	0.079
2 ½”	**2**	0.064
3”	**3**	0.054
4”	**4**	0.041
5”	**5**	0.033
6”	**6**	0.028

This table contains thermal performance data (U-factors) for foamed-in-place, insulated metal panels consisting of liquid polyurethane or polyisocyanurate injected between metal skins in individual molds or on fully automated production lines. Metal building construction is the most common application for this product where the metal panel is fastened to the frame of the structure. This table can only be used for insulated panels that are factory built. This table does not apply to panels that utilize polystyrene, or to field applied products such as spray applied insulations.

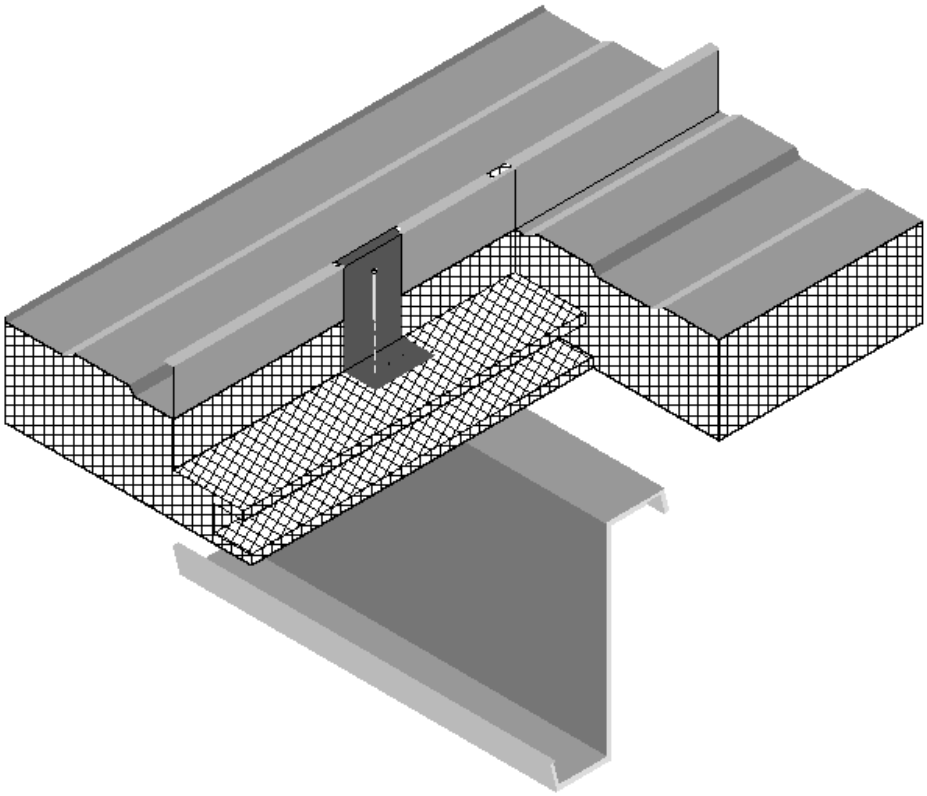

Figure 4.2.9 –Insulated Metal Panel Roofs

Assumptions: These data are calculated using the parallel path method documented in the 2009 ASHRAE Handbook of Fundamentals. These calculations assume an exterior air film of R-0.17, light gauge metal exterior of R-0.0747, continuous insulation R-5.9 per inch, light gauge metal interior of 0.0747 inch thickness and an interior air film (heat flow up) of R-0.61. The panels are assumed to be continuous with no framing penetration. The R-value of the light gauge metal is negligible.

JA4.3 Walls

Table 4.3.1 – U-factors of Wood Framed Walls

Spacing	Cavity Insulation	Nominal Framing Size		Rated R-value of Continuous Insulation [2]						
				R-0	R-2	R-4	R-5	R-6	R-7	R-8
				A	B	C	D	E	F	G
16 in. OC	None	Any	1	0.356	0.209	0.146	0.127	0.113	0.101	0.092
	R-11	2x4	2	0.110	0.088	0.074	0.068	0.064	0.060	0.056
	R-13	2x4	3	0.102	0.082	0.069	0.064	0.060	0.056	0.053
	R-15 [1]	2x4	4	0.095	0.077	0.065	0.060	0.056	0.053	0.050
	R-19	2x6	5	0.074	0.063	0.055	0.051	0.049	0.046	0.044
	R-21[1]	2x6	6	0.069	0.059	0.051	0.048	0.046	0.043	0.041
	R-22	2x6	7	0.072	0.062	0.054	0.051	0.048	0.045	0.043
	R-19	2x8	8	0.065	0.057	0.051	0.048	0.045	0.043	0.041
	R-22	2x8	9	0.061	0.053	0.047	0.045	0.043	0.041	0.039
	R-25	2x8	10	0.057	0.050	0.044	0.042	0.040	0.038	0.037
	R-30[1]	2x8	11	0.056	0.049	0.044	0.041	0.040	0.038	0.036
24 in. OC	None	Any	12	0.362	0.211	0.148	0.128	0.114	0.102	0.092
	R-11	2x4	13	0.106	0.086	0.072	0.067	0.062	0.059	0.055
	R-13	2x4	14	0.098	0.079	0.067	0.062	0.058	0.055	0.052
	R-15	2x4	22	0.091	0.074	0.063	0.059	0.055	0.052	0.049
	R-19	2x6	15	0.071	0.061	0.053	0.050	0.048	0.045	0.043
	R-21[1]	2x6	16	0.066	0.057	0.050	0.047	0.045	0.042	0.040
	R-22	2x6	17	0.069	0.060	0.052	0.049	0.047	0.044	0.042
	R-19	2x8	18	0.063	0.055	0.049	0.047	0.045	0.043	0.041
	R-22	2x8	19	0.058	0.051	0.046	0.044	0.042	0.040	0.038
	R-25	2x8	20	0.055	0.048	0.043	0.041	0.039	0.037	0.036
	R-30[1]	2x8	21	0.054	0.047	0.042	0.040	0.038	0.037	0.035

Notes

1. Higher density fiberglass batt is required in these cases.
2. Continuous insulation may be installed on either the inside or the exterior of the wall, or both.

This table contains U-factors for wood framed walls, which are typical of low-rise residential buildings and Type V nonresidential buildings. If continuous insulation is not used, then choices are made from Column A. In this case, the insulation is installed in the cavity between the framing members. When continuous insulation is used, this is typically installed on the exterior side of the wall, but can also be used on the inside. The continuous insulation is typically a rigid polystyrene or polyisocyanurate foam insulation.

When this table is used manually, the R-value of continuous insulation shall be equal to or greater than the R-value published in the continuous insulation columns. No interpolation is permitted when data from the table is used manually. CEC approved compliance software, however, may determine the U-factor for any amount of continuous insulation or for unusual construction assemblies using Equation 4-1 and Equation 4-2.

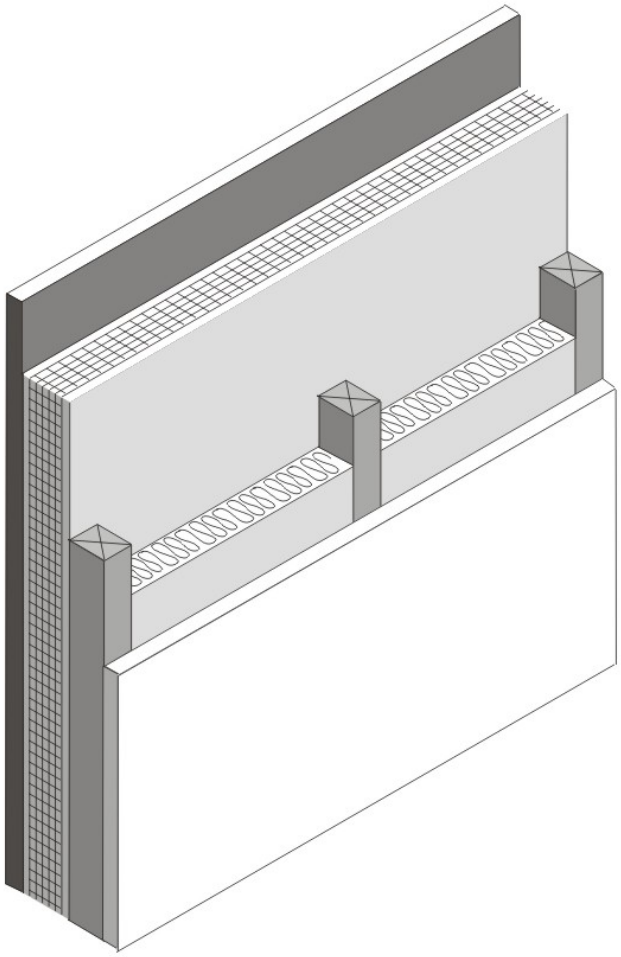

Figure 4.3.1 – Wood Framed Wall

Assumptions: Values in this table were calculated using the parallel heat flow calculation method, documented in the 2009 ASHRAE Handbook of Fundamentals. The construction assembly assumes an exterior air film of R-0.17, a 7/8 inch layer of stucco of R-0.18 (SC01), building paper of R-0.06 (BP01), continuous insulation (if any), the cavity insulation / framing layer, ½ inch gypsum board of R-0.45 (GP01), and an interior air film 0.68. The framing factor is assumed to be 25 percent for 16 inch stud spacing and 22 percent for 24 inch spacing. Actual cavity depth is 3.5 inch for 2x4, 5.5 inch for 2x6, 7.25 inch for 2x8, 9.25 inch for 2x10, and 11.25 inch for 2x12. High density R-30 insulation is assumed to be 8.5 inch thick batt and R-38 is assumed to be 10.5 inch thick. The thickness of the stucco is assumed to be reduced to 3/8 inch when continuous insulation is applied.

Table 4.3.2 – U-factors of Structurally Insulated Wall Panels (SIPS)

Wood Framing Connection Type (spline)	Insulation Core R-value[1]	Typical Panel Thickness		Rated R-value of Continuous Insulation [5]			
				None	R-2	R-4	R-5
				A	B	C	D
OSB	R-14	4.5 in	**1**	0.061	0.055	0.049	0.047
Single 2x	R-14	4.5 in	**2**	0.071	0.061	0.054	0.051
Double 2x	R-14	4.5 in	**3**	0.077	0.065	0.057	0.054
I-joist	R-14	4.5 in	**4**	0.070	0.060	0.053	0.051
OSB	R-18[2]	4.5 in	**5**	0.053	0.045	0.041	0.039
Single 2x	R-18[2]	4.5 in	**6**	0.061	0.052	0.047	0.045
Double 2x	R-18[2]	4.5 in	**7**	0.066	0.056	0.050	0.048
I-joist	R-18[2]	4.5 in	**8**	0.059	0.051	0.046	0.044
OSB	R-22	6.5 in	**9**	0.041	0.038	0.036	0.035
Single 2x	R-22	6.5 in	**10**	0.050	0.044	0.040	0.039
Double 2x	R-22	6.5 in	**11**	0.054	0.048	0.043	0.041
I-joist	R-22	6.5 in	**12**	0.048	0.043	0.039	0.038
OSB	R-28	8.25 in	**13**	0.032	0.030	0.029	0.028
Single 2x	R-28	8.25 in	**14**	0.039	0.036	0.033	0.032
Double 2x	R-28	8.25 in	**15**	0.043	0.039	0.035	0.034
I-joist	R-28	8.25 in	**16**	0.037	0.034	0.032	0.031
OSB	R-33[3]	6.5 in	**17**	0.032	0.029	0.027	0.026
Single 2x	R-33[3]	6.5 in	**18**	0.038	0.034	0.031	0.030
Double 2x	R-33[3]	6.5 in	**19**	0.043	0.038	0.034	0.033
I-joist	R-33[3]	6.5 in	**20**	0.036	0.033	0.030	0.029
OSB	R-36	10.25 in	**21**	0.026	0.024	0.023	0.023
Single 2x	R-36	10.25 in	**22**	0.032	0.030	0.028	0.027
Double 2x	R-36	10.25 in	**23**	0.035	0.032	0.030	0.029
I-joist	R-36	10.25 in	**24**	0.030	0.028	0.026	0.026
OSB	R-44	12.25 in	**25**	0.022	0.021	0.020	0.020
Single 2x	R-44	12.25 in	**26**	0.027	0.025	0.024	0.023
Double 2x	R-44	12.25 in	**27**	0.028	0.027	0.025	0.025
I-joist	R-44	12.25 in	**28**	0.025	0.024	0.022	0.022
OSB	R-55[4]	10.25 in	**29**	0.020	0.019	0.017	0.016
Single 2x	R-55[4]	10.25 in	**30**	0.024	0.022	0.021	0.021
Double 2x	R-55[4]	10.25 in	**31**	0.028	0.025	0.023	0.023
I-joist	R-55[4]	10.25 in	**32**	0.022	0.021	0.019	0.019

Notes:

1. The insulation R-value must be at least R-14 in order to use this table. This table assumes moulded expanded polystyrene (EPS) unless noted otherwise. Although other insulation types are used by some SIP manufacturers, such as polyurethane and extruded expanded insulation (XPS), EPS is the most common insulation used in SIP construction.
2. R-18.1 is achievable using extruded expanded polystyrene (XPS) insulation in 4.5" thick panels.
3. R-33.2 is achievable using polyurethane insulation in 6.5" panels.
4. R-55.3 is achievable using polyurethane insulation in 10.25" panels.
5. Continuous insulation shall be at least R-2 and may be installed on either the inside or the exterior of the wall.

Structural insulated panels (SIPs) consist of a rigid insulation core, securely bonded between two structural facings, to form a structural sandwich panel. SIPs are considered a non-framed assembly usually with little or no structural framing that penetrates the insulation layer, resulting in less thermal bridging across the insulation when compared to a conventional framed assembly.

This table gives U-factors for structurally insulated panels used in wall construction. This is a construction system that consists of rigid foam insulation sandwiched between two layers of plywood or oriented strand board (OSB). Data is provided for four variations of connecting two panels together.

If continuous insulation is not used, then choices are made from Column A. When continuous insulation is also used, this is typically installed on the exterior side of the wall, but can also be used on the inside. The continuous insulation is typically a rigid polystyrene or polyisocyanurate foam insulation. Adding continuous insulation to a SIPS panel is highly unusual since the panel itself is mostly continuous insulation.

When this table is used manually, the R-value of continuous insulation shall be equal to or greater than the R-value published in the continuous insulation columns. No interpolation is permitted when data from the table is used manually. CEC approved software, however, may determine the U-factor for any amount of continuous insulation or for unusual construction assemblies using Equation 4-1 and Equation 4-2.

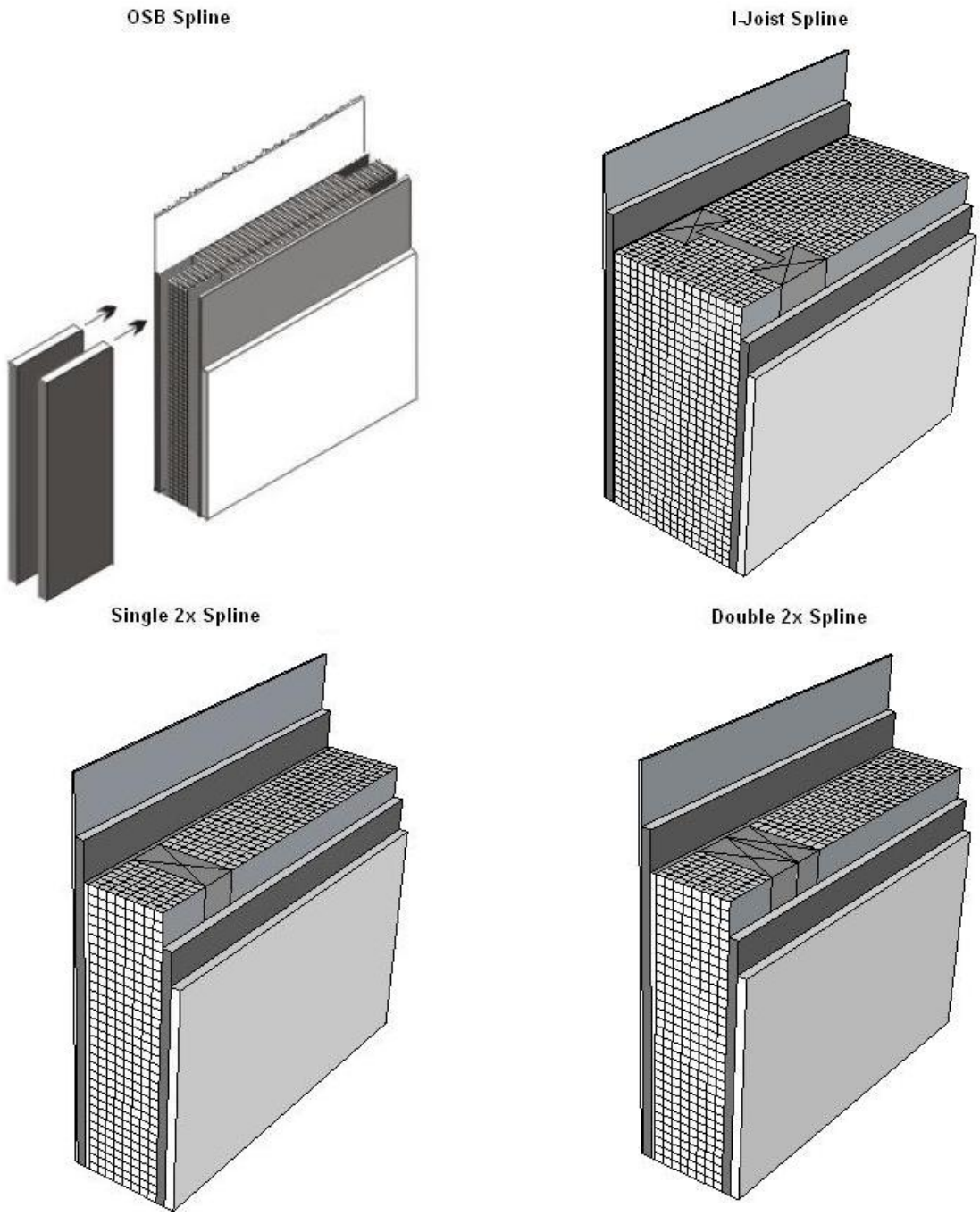

Figure 4.3.2 – Structurally Insulated Wall Panels (SIPS)

This figure shows just one way that panels are connected. Other options exist.

Assumptions: These data are calculated using the parallel path method documented in the 2009 ASHRAE Handbook of Fundamentals.

These calculations assume an exterior air film of R-0.17, a 7/8 inch layer of stucco of R-0.18, building paper of R-0.06 (BP01), 7/16 inch of OSB of R-0.44, insulation at carrying R-values (as specified), 7/16 inch of OSB of R-0.44, ½ inch gypsum board of R-0.45 (GP01), and in interior air film of R-0.68. A framing factor of 13 percent

is assumed for wood spacers and 7 percent for the OSB spline system. Framing includes the sill plate, the header and framing around windows and doors.

Table 4.3.3 – U-factors of Metal Framed Walls for Nonresidential Construction

Spacing	Cavity Insulation R-Value:	Nominal aming Size		Rated R-value of Continuous Insulation [2]								
				R-0	R-2	R-4	R-5	R-6	R-7	R-8	R-10	R-12
				A	B	C	D	E	F	G	H	
16 in. OC	None	Any	**1**	0.458	0.239	0.162	0.139	0.122	0.109	0.098	0.082	0.071
	R-5	2x4	**2**	0.351	0.203	0.144	0.127	0.112	0.101	0.092	0.078	0.067
	R-11	2x4	**3**	0.224	0.155	0.118	0.106	0.096	0.087	0.080	0.069	0.061
	R-13	2x4	**4**	0.217	0.151	0.116	0.104	0.094	0.086	0.079	0.068	0.060
	R-15	2x4	**5**	0.211	0.148	0.114	0.103	0.093	0.085	0.078	0.068	0.060
	R-19	2x6	**6**	0.183	0.134	0.106	0.096	0.087	0.080	0.074	0.065	0.057
	R-21[1]	2x6	**7**	0.178	0.131	0.104	0.094	0.086	0.079	0.073	0.064	0.057
	R-19	2x8	**8**	0.164	0.123	0.099	0.090	0.083	0.076	0.071	0.062	0.055
	R-22	2x8	**9**	0.160	0.121	0.098	0.089	0.082	0.075	0.070	0.062	0.055
	R-25	2x8	**10**	0.158	0.120	0.097	0.088	0.081	0.075	0.070	0.061	0.055
	R-30[1]	2x8	**11**	0.157	0.119	0.096	0.088	0.081	0.075	0.070	0.061	0.054
24 in. OC	None	Any	**20**	0.455	0.238	0.161	0.139	0.122	0.109	0.098	0.082	0.070
	R-5	2x4	**21**	0.333	0.200	0.143	0.125	0.111	0.100	0.091	0.077	0.067
	R-11	2x4	**22**	0.210	0.148	0.114	0.102	0.093	0.085	0.078	0.068	0.060
	R-13	2x4	**23**	0.203	0.144	0.112	0.101	0.092	0.084	0.077	0.067	0.059
	R-15	2x4	**24**	0.197	0.141	0.110	0.099	0.090	0.083	0.076	0.066	0.059
	R-19	2x6	**25**	0.164	0.123	0.099	0.090	0.083	0.076	0.071	0.062	0.055
	R-21[1]	2x6	**26**	0.161	0.122	0.098	0.089	0.082	0.076	0.070	0.062	0.055
	R-19	2x8	**27**	0.153	0.117	0.095	0.087	0.080	0.074	0.069	0.060	0.054
	R-22	2x8	**28**	0.149	0.115	0.093	0.085	0.079	0.073	0.068	0.060	0.053
	R-25	2x8	**29**	0.147	0.114	0.093	0.085	0.078	0.072	0.068	0.060	0.053
	R-30[1]	2x8	**30**	0.146	0.113	0.092	0.084	0.078	0.072	0.067	0.059	0.053

Notes

1. Higher density fiberglass batt is required in these cases.
2. Continuous insulation may be installed on either the inside or the exterior of the wall, or both.

This table contains U-factors for steel or metal-framed walls, which are typical of nonresidential buildings. The table may be used for any construction assembly where the insulation is installed in the cavity of a metal-framed wall, or where continuous insulation is installed on the exterior or interior of the metal framing, or a combination of these two methods of insulating a metal-framed wall.

If continuous insulation is not used, then choices are made from Column A. In this case, the insulation is installed only in the cavity between the framing members. When continuous insulation is used, it is typically installed on the exterior side of the wall, but can also be used on the inside. The continuous insulation is typically a rigid polystyrene or polyisocyanurate foam insulation.

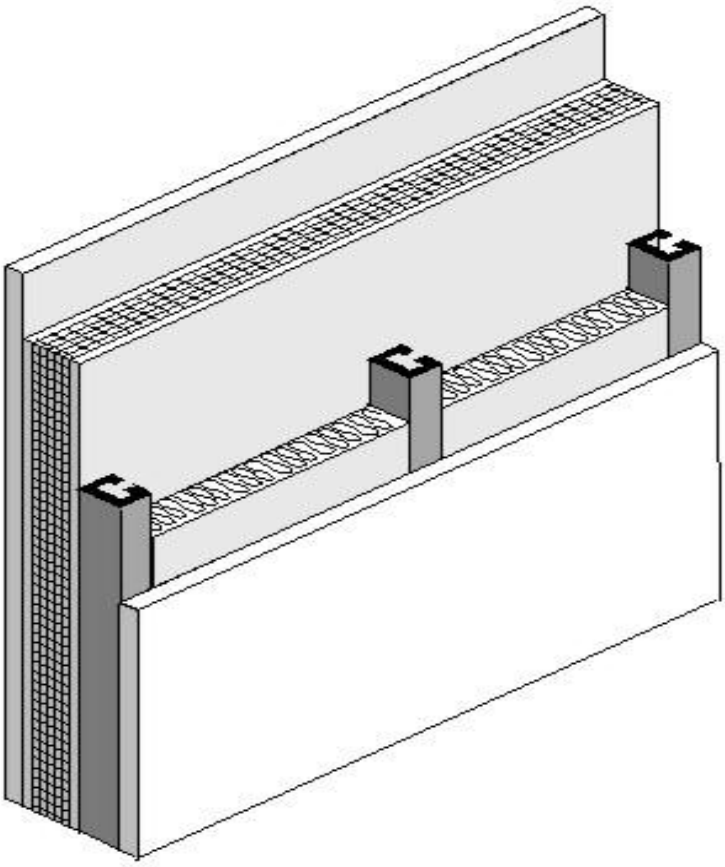

Figure 4.3.3 – Metal Framed Wall

When this table is used manually, the R-value of continuous insulation shall be equal to or greater than the R-value published in the continuous insulation columns. No interpolation is permitted when data from the table is used manually. CEC approved compliance software programs, however, may determine the U-factor for any amount of continuous insulation or for unusual construction assemblies using Equation 4-1 and Equation 4-2.

Assumptions: Values in this table were calculated using the zone calculation method. The construction assembly assumes an exterior air film of R-0.17, a 7/8 inch layer of stucco of R-0.18, building paper of R-0.06 (BP01), continuous insulation (if any), the insulation / framing layer, 1/2 inch gypsum of R-0.45 gypsum board (GP01), and an interior air film 0.68. The steel framing is assumed to be 0.0747 inch thick with a 15 percent knock out. The framing factor is assumed to be 25 percent for 16 inch stud spacing and 22 percent for 24 inch spacing. The EZFrame internal default framing percentages are 15 percent for 16 inch stud spacing and 12 percent for 24 inch spacing. To account for the increased wall framing percentage the frame spacing input to the EZ Frame program is reduced to 13.218 inches for 16 inch stud spacing and 15.231 inches for 24 inch stud spacing. Actual cavity depth is 3.5 inch for 2x4, 5.5 inch for 2x6, 7.25 inch for 2x8, 9.25 inch for 2x10, and 11.25 inch for 2x12. High density R-30 insulation is assumed to be 8.5 inch thick batt and R-38 is assumed to be 10.5 inch thick. The thickness of the stucco is assumed to be reduced to 3/8 inch when continuous insulation is applied.

Table 4.3.4 – U-factors of Metal Framed Walls for Residential Construction

				Rated R-value of Continuous Insulation [2]					
	Cavity Insulation R-Value:	Nominal Framing Size		R-0	R-2	R-4	R-5	R-6	R-7
Spacing				A	B	C	D	E	F
16 in. OC	None	Any	**1**	0.455	0.238	0.161	0.139	0.122	0.109
	R-05	2x4	**2**	0.252	0.165	0.124	0.110	0.099	0.90
	R-11	2x4	**3**	0.200	0.137	0.107	0.097	0.088	0.081
	R-13	2x4	**4**	0.192	0.132	0.105	0.095	0.087	0.080
	R-15	2x4	**5**	0.186	0.129	0.102	0.093	0.085	0.078
	R-19	2x6	**6**	0.154	0.112	0.092	0.084	0.077	0.072
	R-21[1]	2x6	**7**	0.151	0.110	0.090	0.083	0.076	0.071
	R-19	2x8	**8**	0.134	0.102	0.085	0.078	0.072	0.067
	R-22	2x8	**9**	0.129	0.099	0.082	0.076	0.071	0.066
	R-25	2x8	**10**	0.125	0.096	0.081	0.075	0.069	0.065
	R-30[1]	2x8	**11**	0.120	0.093	0.078	0.073	0.068	0.063
	R-30	2x10	**12**	0.109	0.086	0.073	0.068	0.064	0.060
	R-38[1]	2x10	**13**	0.104	0.082	0.071	0.066	0.062	0.058
	R-38	2 x 12	**14**	0.095	0.077	0.067	0.062	0.059	0.055
24 in. OC	None	Any	**15**	0.449	0.236	0.161	0.138	0.121	0.108
	R-05	2x4	**16**	0.243	0.161	0.122	0.108	0.098	0.089
	R-11	2x4	**17**	0.189	0.131	0.104	0.094	0.086	0.079
	R-13	2x4	**18**	0.181	0.127	0.101	0.092	0.084	0.078
	R-15	2x4	**19**	0.175	0.123	0.099	0.090	0.082	0.076
	R-19	2x6	**20**	0.144	0.107	0.088	0.081	0.075	0.070
	R-21[1]	2x6	**21**	0.141	0.105	0.086	0.080	0.074	0.069
	R-19	2x8	**22**	0.126	0.097	0.081	0.075	0.070	0.065
	R-22	2x8	**23**	0.121	0.094	0.079	0.073	0.068	0.064
	R-25	2x8	**24**	0.117	0.091	0.077	0.071	0.067	0.063
	R-30[1]	2x8	**25**	0.112	0.088	0.075	0.069	0.065	0.061
	R-30	2x10	**26**	0.102	0.081	0.070	0.065	0.061	0.058
	R-38[1]	2x10	**27**	0.096	0.077	0.067	0063	0.059	0.056
	R-38	2 x 12	**28**	0.088	0.072	0.063	0.059	0.056	0.053

Notes

1. Higher density fiberglass batt is required in these cases.
2. Continuous insulation may be installed on either the inside or the exterior of the wall, or both.

This table contains U-factors for steel or metal framed walls in low-rise residential buildings where the thickness of the framing members is 18 gauge or thinner. Table 4.3.3 in Reference Joint Appendix JA4 must be used for steel or metal-.framed walls in nonresidential buildings (including high-rise residential buildings and hotels and motels) and in low rise residential buildings if the thickness of the framing members are thinner than 18 gauge.

If continuous insulation is not used, then choices are made from Column A. In this case, the insulation is installed only in the cavity between the framing members. When continuous insulation is-used, it is typically installed on the exterior side of the wall, but can also be used on the inside. The continuous insulation is typically a rigid polystyrene or polyisocyanurate foam insulation.

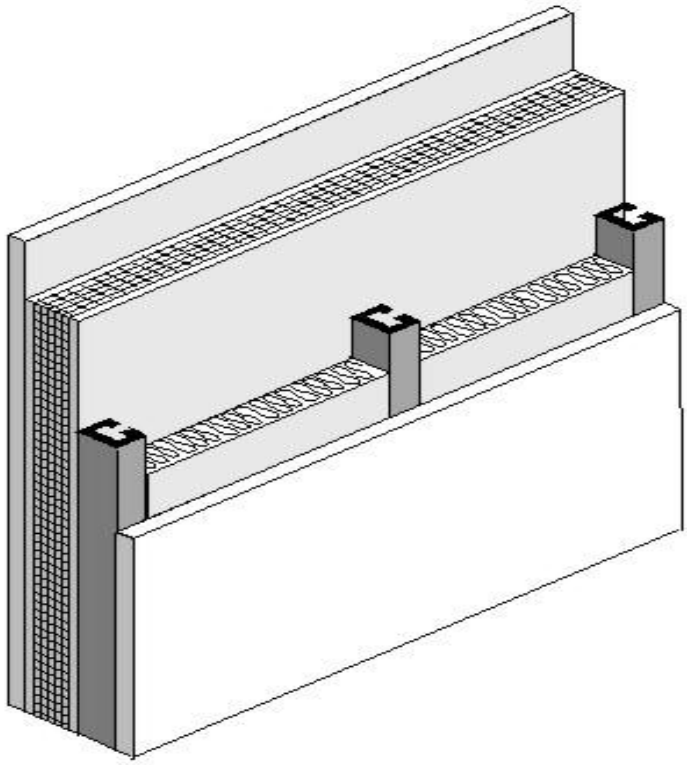

Figure 4.3.4 – Metal Framed Wall

When this table is used manually, the R-value of continuous insulation shall be equal to or greater than the R-value published in the continuous insulation columns. No interpolation is permitted when data from the table is used manually. CEC approved compliance software programs, however, may determine the U-factor for any amount of continuous insulation or for unusual construction assemblies using Equation 4-1 and Equation 4-2.

Assumptions: Values in this table were calculated using the zone calculation method. The construction assembly assumes an exterior air film of R-0.17, a 7/8 inch layer of siding or stucco averaging R-0.18, building paper of R-0.06 (BP01), continuous insulation (if any), the insulation / framing insulation layer, 1/2 inch gypsum of R-0.45 gypsum board (GP01), and an interior air film 0.68. The framing factor is assumed to be 25 percent for 16 inch stud spacing and 22 percent for 24 inch spacing. To account for the increased wall framing percentage, the frame spacing input to the EZ Frame program is reduced to 13.218 inches for 16 inch stud spacing and 15.231 inches for 24 inch stud spacing. The stud web thickness is assumed to be 0.038 inches, which is a 50/50 mix of 18 gauge and 20 gauge C-channel studs. This value was confirmed to be representative of low-rise residential construction by polling several California-based light-gauge steel structural engineers and light-gauge steel framers. Actual cavity depth is 3.5 inch for 2x4, 5.5 inch for 2x6, 8 inch for 2x8, 10 inch for 2x10, and 12 inches for 2x12. High density R-30 insulation is assumed to be 8.5 inch thick batt and R-38 is assumed to be 10.5 inches thick. The thickness of the stucco is assumed to be reduced to 3/8 inch when continuous insulation is applied.

Table 4.3.5 – Properties of Hollow Unit Masonry Walls

			Partly Grouted with Ungrouted Cells								
			Solid Grout			Empty			Insulated		
Thickness	**Type**		A			B			C		
		1	U-factor	C-factor	HC	U-factor	C-factor	HC	U-factor	C-factor	HC
12"	LW CMU	**2**	0.51	0.90	23	0.43	0.68	14.8	0.30	0.40	14.8
	MW CMU	**3**	0.54	1.00	23.9	0.46	0.76	15.6	0.33	0.46	15.6
	NW CMU	**4**	0.57	1.11	24.8	0.49	0.84	16.5	0.36	0.52	16.5
10"	LW CMU	**5**	0.55	1.03	18.9	0.46	0.76	12.6	0.34	0.48	12.6
	MW CMU	**6**	0.59	1.18	19.7	0.49	0.84	13.4	0.37	0.54	13.4
	NW CMU	**7**	0.62	1.31	20.5	0.52	0.93	14.2	0.41	0.63	14.2
8"	LW CMU	**8**	0.62	1.31	15.1	0.50	0.87	9.9	0.37	0.54	9.9
	MW CMU	**9**	0.65	1.45	15.7	0.53	0.96	10.5	0.41	0.63	10.5
	NW CMU	**10**	0.69	1.67	16.3	0.56	1.07	11.1	0.44	0.70	11.1
	Clay Unit	**11**	0.57	1.11	15.1	0.47	0.78	11.4	0.39	0.58	11.4
6"	LW CMU	**12**	0.68	1.61	10.9	0.54	1.00	7.9	0.44	0.70	7.9
	MW CMU	**13**	0.72	1.86	11.4	0.58	1.14	8.4	0.48	0.81	8.4
	NW CMU	**14**	0.76	2.15	11.9	0.61	1.27	8.9	0.52	0.93	8.9
	Clay Unit	**15**	0.65	1.45	11.1	0.52	0.93	8.6	0.45	0.73	8.6

The walls addressed in this table are rarely used in residential construction, but are common in some types of nonresidential construction. The tables include four types of hollow masonry units: lightweight concrete masonry units (CMU), medium weight CMU, normal weight CMU, and hollow clay masonry units. ASTM C-90 defines these masonry products in more detail.

Masonry used in California must be reinforced to withstand wind loads and earthquakes. This is achieved by installing reinforcing steel and grouting the cells in both a vertical and horizontal direction. Since grouting the cells affects thermal performance, data is provided for three cases: where every cell is grouted, where the cells are partially grouted and the remaining cells are left empty, and where the cells are partially grouted and the remaining cells are filled with perlite or some other insulating material.

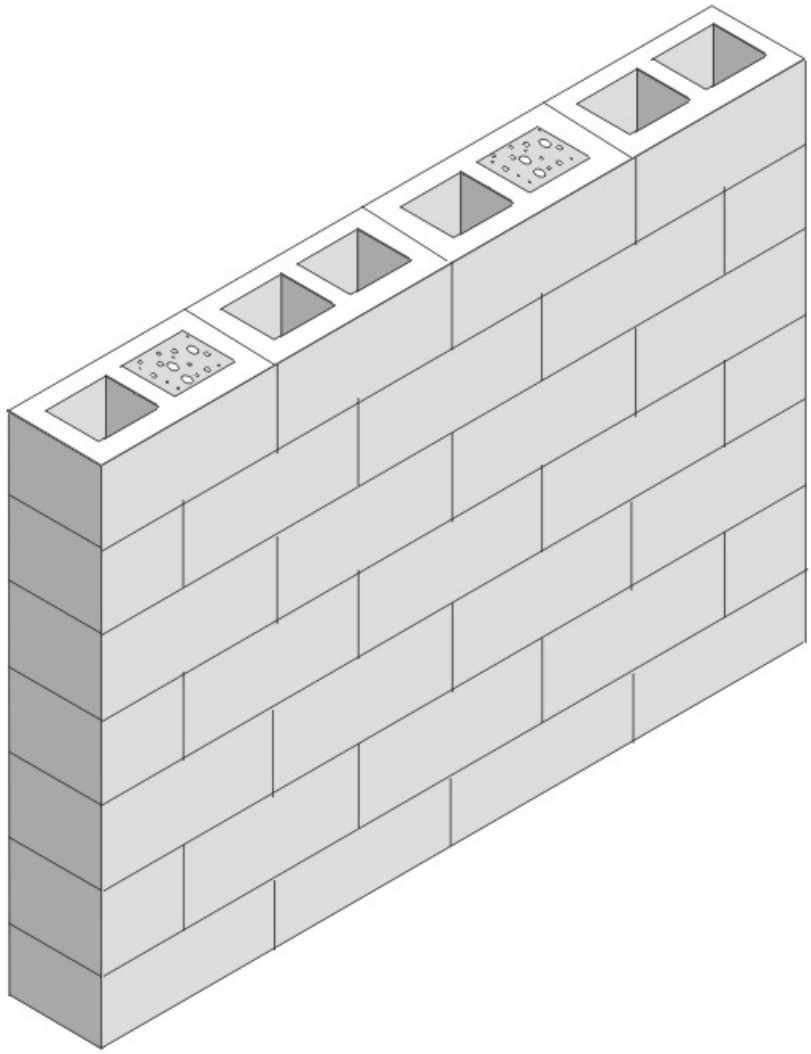

Figure 4.3.5 – Masonry Wall

For each of these conditions the U-factor, C-factor and heat capacity (HC) is published. There are other properties of mass materials that may be needed in compliance calculations, but these values can be determined from the published data using the procedures in Modeling Constructions in the Nonresidential compliance software and in Section 4.6 of this document.

Assumptions: Data is taken from *Energy Calculations and Data*, CMACN, 1986, Berkeley Solar Group; Concrete Masonry Association of California and Nevada. The density of the CMU material (not counting the grouted or hollow cells) is 105 lb/ft³ for lightweight, 115 lb/ft³ for medium weight and 125 lb/ft³ for normal weight. The density of the clay unit material is 130 lb/ft³. For all four types of masonry units, data is provided for thicknesses of 6 in., 8 in., 10 in., and 12 in. For the partially grouted cases, vertical cells are assumed to be grouted at 32 inch on center. Reinforcing in the horizontal direction is at 48 in. on center. Wall thicknesses given in the table are nominal; actual thicknesses are 3/8 in. less. Insulating material inside unit masonry hollow is assumed to be perlite.

Table 4.3.6 – Properties of Solid Unit Masonry and Solid Concrete Walls

			Wall Thickness, inches									
			3	**4**	**5**	**6**	**7**	**8**	**9**	**10**	**11**	**12**
Type	**Property**		**A**	**B**	**C**	**D**	**E**	**F**	**G**	**H**	**I**	**J**
LW CMU	U-Factor		0.79	0.71	0.65	0.59	0.54	0.51	0.47	0.44	0.42	0.39
	C-Factor	**1**	2.38	1.79	1.43	1.18	1.01	0.88	0.79	0.71	0.65	0.59
	HC		5.3	7.00	8.80	10.50	12.30	14.00	15.80	17.50	19.30	21.00
MW CMU	U-Factor		0.84	0.77	0.70	0.65	0.61	0.57	0.53	0.50	0.48	0.45
	C-Factor	**2**	2.94	2.22	1.75	1.47	1.25	1.10	0.98	0.88	0.80	0.74
	HC		5.80	7.70	9.60	11.5	13.40	15.30	17.30	19.20	21.10	23.00
NW CMU	U-Factor		0.88	0.82	0.76	0.71	0.67	0.63	0.60	0.56	0.53	0.51
	C-Factor	**3**	3.57	2.70	2.17	1.79	1.54	1.35	1.20	1.03	0.98	0.90
	HC		6.30	8.30	10.40	12.50	14.6	16.70	18.80	20.80	22.90	25.00
Clay Brick	U-Factor		0.80	0.72	0.66	na	na	Na	na	Na	na	na
	C-Factor	**4**	2.50	1.86	1.50	na	na	Na	na	Na	na	na
	HC		6.30	8.40	10.43	na	na	Na	na	Na	na	na
Concrete	U-Factor		0.96	0.91	0.86	0.82	0.78	0.74	0.71	0.68	0.65	0.63
	C-Factor	**5**	5.22	4.02	3.20	2.71	2.31	1.99	1.79	1.61	1.45	1.36
	HC		7.20	9.60	12.00	14.40	16.80	19.20	21.60	24.00	26.40	28.80

This table provides thermal performance information for solid masonry units and solid concrete walls.

The walls addressed in this table are rarely used in residential construction, but are common in some types of nonresidential construction.

There are other properties of mass materials that may be needed in compliance calculations, but these values can be determined from the published data using the procedures in Modeling Constructions in the Nonresidential compliance software and in Section 4.6 of this document.

When insulation is added to the outside of masonry walls and/or when the inside is furred and insulated, the performance data in this table may be adjusted using Equation 4-4 and Equation 4-5 in coordination with Table 4.3.14.

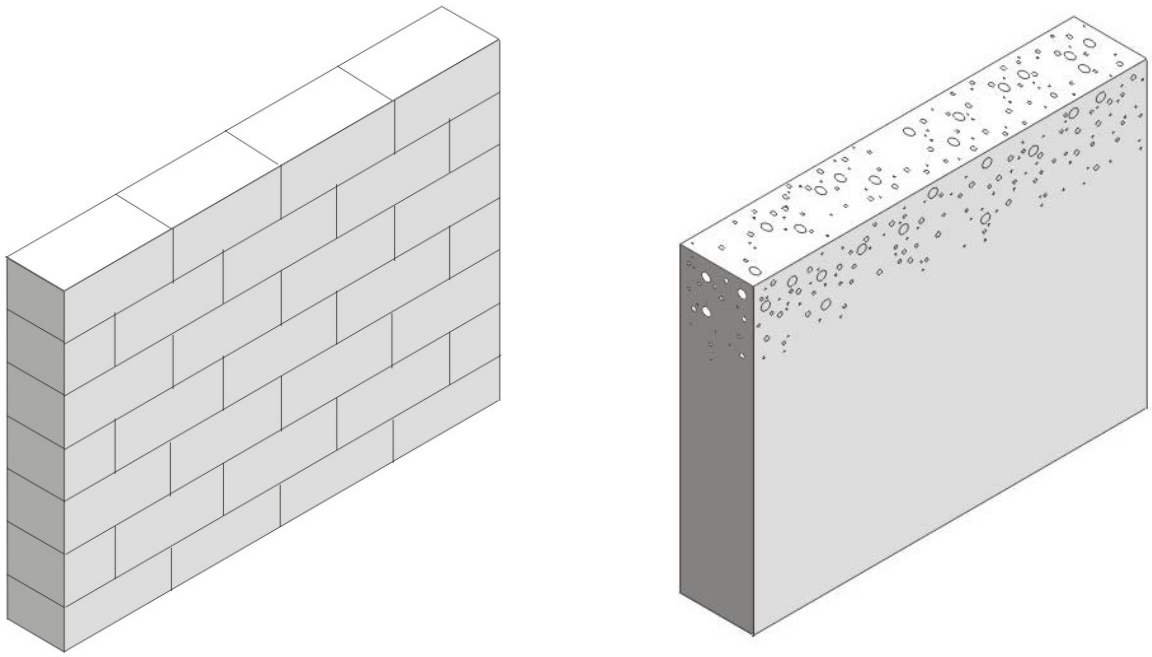

Figure 4.3.6 – Solid Unit Masonry (left) and Solid Concrete (right) Walls

Assumptions: Data is taken from ASHRAE/IESNA Standard 90.1-2004. The density of the CMU material is 105 lb/ft³ for lightweight, 115 lb/ft³ for medium weight and 125 lb/ft³ for normal weight. The density of the clay unit material is 130 lb/ft³ and the density of the concrete is 144 lb/ft³. For all five types of masonry walls, the U-factor, C-factor and heat capacity (HC) is provided for thicknesses of 3 inch, 4 inch, and 5 inch ASTM C-90 provides more information on the classification of masonry walls.

Table 4.3.7 – Properties of Concrete Sandwich Panels

Percent Concrete Web	Steel Penetrates Insulation	Performance Factor		Insulation Thickness (R-value)				
				1.5 (7.0)	**2.0 (9.3)**	**3.0 (14.0)**	**4.0 (18.6)**	**6.0 (27.9)**
				A	**B**	**C**	**D**	**E**
0%	No	U-factor	**1**	0.122	0.095	0.066	0.051	0.034
		C-factor		0.136	0.104	0.070	0.053	0.035
		HC		16.13	16.13	16.13	16.13	16.13
	Yes	U-factor	**2**	0.164	0.128	0.091	0.070	0.048
		C-factor		0.190	0.144	0.099	0.074	0.050
		HC		16.13	16.13	16.13	16.13	16.13
10%	No	U-factor	**3**	0.476	0.435	0.345	0.286	0.217
		C-factor		0.800	0.690	0.488	0.377	0.267
		HC		16.53	16.66	16.93	17.20	17.74
	Yes	U-factor	**4**	0.500	0.435	0.357	0.303	0.227
		C-factor		0.870	0.690	0.513	0.408	0.282
		HC		16.53	16.66	16.93	17.20	17.74
20%	No	U-factor	**5**	0.588	0.556	0.476	0.417	0.333
		C-factor		1.176	1.053	0.800	0.645	0.465
		HC		16.93	17.20	17.74	18.28	19.35
	Yes	U-factor	**6**	0.588	0.556	0.476	0.417	0.333
		C-factor		1.176	1.053	0.800	0.645	0.465
		HC		16.93	17.20	17.74	18.28	19.35

This table provides U-factors, C-factors, and heat capacity (HC) data for concrete sandwich panels. Concrete sandwich panels, as the name suggests, consist of two layers of concrete that sandwich a layer of insulation. The wall system can be constructed in the field or in a factory. One method of field construction is where the wall panels are formed in a flat position using the concrete floor slab of the building as the bottom surface. After the panel has set, it is hoisted with a crane into its final vertical position.

Both the percent of concrete web and the percent steel are factors in determining the thermal performance of walls. The insulation layer in this type of concrete sandwich panel generally does not extend over the entire surface of the wall. To provide structural integrity, a certain portion of the wall is solid concrete, which ties together the two concrete layers. This portion is known as the concrete web. The thermal performance of concrete sandwich panels depends on the percent of the wall that is concrete web. Data is provided for concrete webs representing 0 percent, 10 percent and 20 percent of the opaque wall surface. In some cases, the concrete layers are tied together by structural steel that penetrates the insulation layer. Data is provided for the case where this steel is present and for cases where it is not.

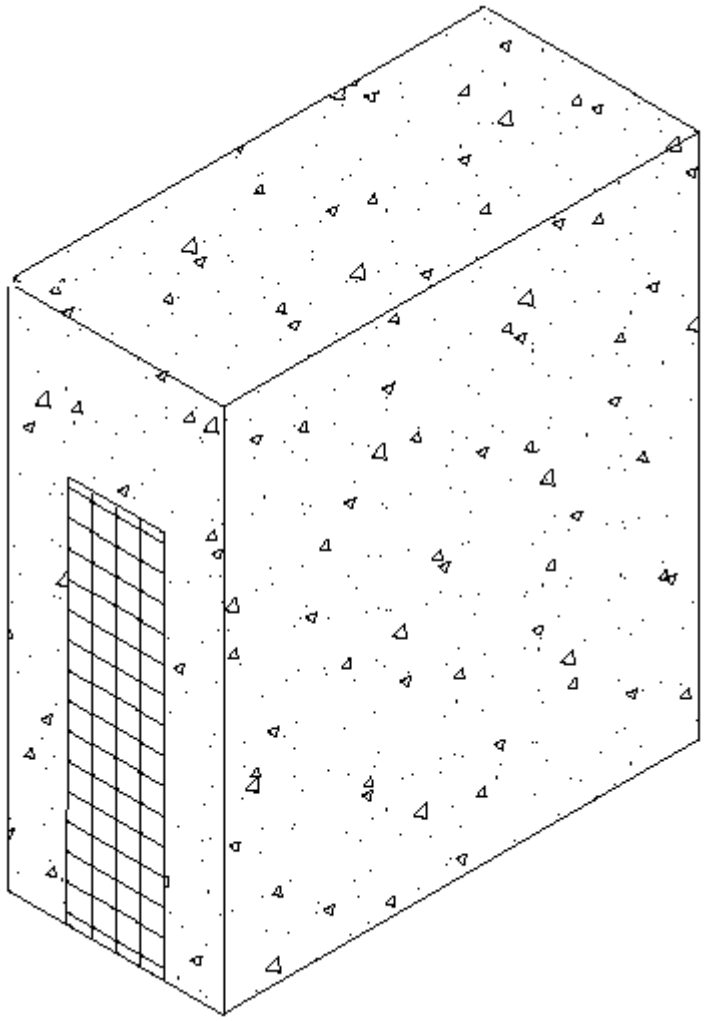

Figure 4.3.7 – Concrete Sandwich Panel

Other properties of mass materials such as density, conductivity, specific heat and wall weight may be needed in compliance calculations and these properties may be determined from the published data in Table 4.3.7 using the procedures in Modeling Constructions in the Nonresidential compliance software and in Section 4.6 of this document.

Values from this table may be combined with values from Table 4.3.14 when a furring layer is added to the inside of the wall and/or continuous insulation is added to the outside of the wall. Adjustments for additional layers shall follow the procedure of Equation 4-4 and Equation 4-5.

Assumptions: U-factors include an inside air film of 0.68 and an exterior air film of 0.17. Conductivity of the concrete is assumed to be 0.215 Btu/h-ºF-f, density is 150 lb/ft³, the thickness of each side of the sandwich panel is 0.5 ft. The data was calculated by Construction Technologies Laboratories, Inc. and published in the Thermal Mass Handbook, Concrete and Masonry Design Provisions Using ASHRAE/IESNA 90.1-1989, National Codes and Standards Council of the Concrete and Masonry Industries, 1994.

Table 4.3.8 – U-factors for Spandrel Panels and Glass Curtain Walls

			Rated R-value of Insulation between Framing Members							
			None	**R-4**	**R-7**	**R-10**	**R-15**	**R-20**	**R-25**	**R-30**
Frame Type	**Spandrel Panel**		**A**	**B**	**C**	**D**	**E**	**F**	**G**	**H**
Aluminum without Thermal Break	Single glass pane, stone, or metal panel	**1**	0.360	0.242	0.222	0.212	0.203	0.198	0.195	0.193
	Double glass with no low-e coatings	**2**	0.297	0.233	0.218	0.209	0.202	0.197	0.194	0.192
	Triple or low-e glass	**3**	0.267	0.226	0.214	0.207	0.200	0.196	0.194	0.192
Aluminum with Thermal Break	Single glass pane, stone, or metal panel	**4**	0.350	0.211	0.186	0.173	0.162	0.155	0.151	0.149
	Double glass with no low-e coatings	**5**	0.278	0.200	0.180	0.170	0.160	0.154	0.151	0.148
	Triple or low-e glass	**6**	0.241	0.191	0.176	0.167	0.159	0.153	0.150	0.148
Structural Glazing	Single glass pane, stone, or metal panel	**7**	0.354	0.195	0.163	0.147	0.132	0.123	0.118	0.114
	Double glass with no low-e coatings	**8**	0.274	0.180	0.156	0.142	0.129	0.122	0.117	0.114
	Triple or low-e glass	**9**	0.231	0.169	0.150	0.138	0.127	0.121	0.116	0.113
No framing or Insulation is Continuous	Single glass pane, stone, or metal panel	**10**	0.360	0.148	0.102	0.078	0.056	0.044	0.036	0.031
	Double glass with no low-e coatings	**11**	0.297	0.136	0.097	0.075	0.054	0.043	0.035	0.030
	Triple or low-e glass	**12**	0.267	0.129	0.093	0.073	0.053	0.042	0.035	0.030

This table has U-factors for the spandrel section of glass and other curtain wall systems. Design factors that affect performance are the type of framing, the type of spandrel panel and the R-value of insulation.

Four framing conditions are considered in the table. The first is the common case where standard aluminum mullions are used. Standard mullions provide a thermal bridge through the insulation, reducing its effectiveness. The second case is for metal framing members that have a thermal break. A thermal break frame uses a urethane or other non-metallic element to separate the metal exposed to outside conditions from the metal that is exposed to interior conditions. The third case is for structural glazing or systems where there is no exposed mullion on the interior. The fourth case is for the condition where there is no framing or the insulation is continuous and uninterrupted by framing. The columns in the table can be used for any specified level of insulation between framing members installed in framed curtain walls or spandrel panels.

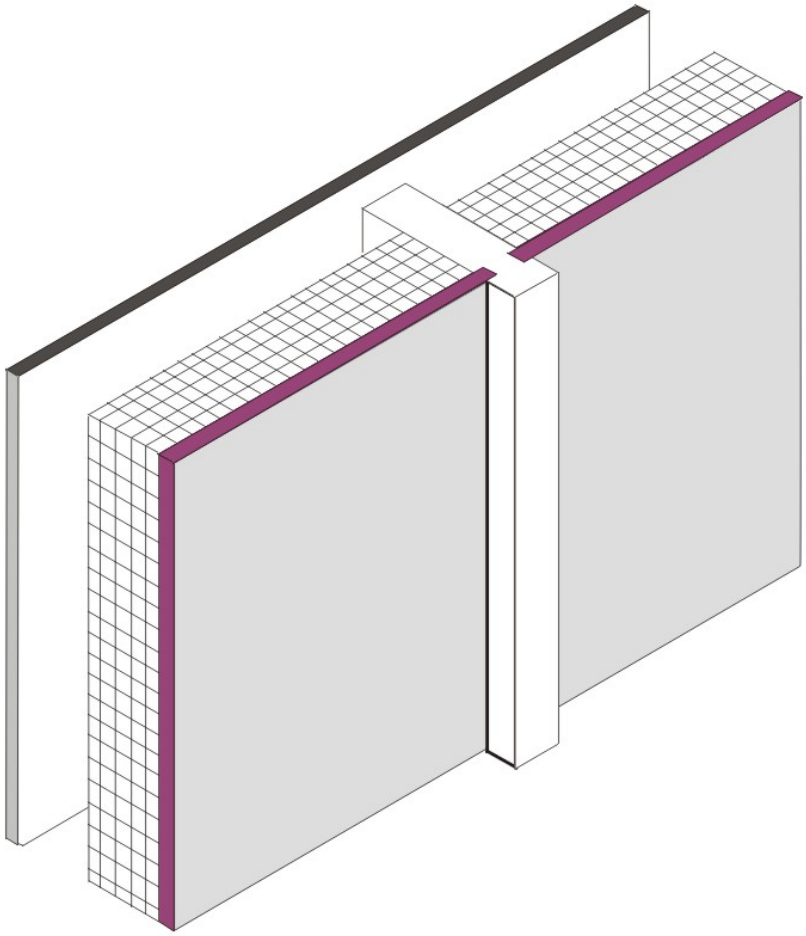

Figure 4.3.8 – Spandrel Panel

There are three spandrel panel cases considered in the table. The first is for a panel that provides little or no insulating value. This includes single pane glass, stone veneer, metal panels, or pre-case concrete less than 2 inches thick. The second case is for insulating glass. Sometimes insulating glass is used so that the spandrel panel looks similar to the vision glass. The third case is for triple glass or double glass that has a low-e coating.

Insulation levels are shown in the columns of the table. When the table is used manually, the R-value of insulation shall be equal to or greater than the R-value published in the columns. No interpolation is permitted when data from the table is selected manually. California Energy Commission approved compliance software programs, including those used for prescriptive compliance, may accurately account for any amount of continuous insulation or for unusual construction assemblies using Equation 4-1 and Equation 4-2. If the curtain wall has an insulated metal-framed wall on the inside, then values from this table may be combined with values from Table 4.3.4 or Table 4.3.14 using the procedures of Equation 4-2 or Equation 4-3.

Assumptions: The U-factors in Table 4.3.8 were derived from a regression analysis of the values for “Glass Only Center of Glass” and “Curtain Wall” in the 2009 ASHRAE Handbook of Fundamentals, Chapter 15, Table 4. The U-factors in Table 4.3.8 include an exterior air film with an R-value of 0.17 and an interior air film R-value of 0.68, which are accounted for in the values from the 2009

ASHRAE Handbook of Fundamentals. The construction assembly consists of the Frame Type and Spandrel Panel combinations listed in Table 4.3.8, an air gap with an R-value of 1.39 (3/4 inch gap, 50 ºF mean temperature and 30 ºF temperature difference), and 5/8 inch gypsum board with an R-value of 0.56 that provides the interior finish. The gypsum board is assumed to span between the window sill and a channel at the floor.

The following equations were used when no rigid insulation is added to the assembly.

Aluminum Without Thermal Break

$$U_{Overall} = \frac{1}{\left[\left(R_{Gypsum} + R_{AirGap}\right) + \left(\frac{1}{0.2798 + 0.8929 \times U_{CenterofGlass}}\right)\right]}$$ Equation 4-6

Aluminum With Thermal Break

$$U_{Overall} = \frac{1}{\left[\left(R_{Gypsum} + R_{AirGap}\right) + \left(\frac{1}{0.1808 + 0.8874 \times U_{CenterofGlass}}\right)\right]}$$ Equation 4-7

Structural Glazing

$$U_{Overall} = \frac{1}{\left[\left(R_{Gypsum} + R_{AirGap}\right) + \left(\frac{1}{0.1151 + 0.9487 \times U_{CenterofGlass}}\right)\right]}$$ Equation 4-8

The following equations were used when rigid insulation is added to the assembly.

Aluminum Without Thermal Break

$$U_{Overall} = \frac{1}{\left[\left(R_{Gypsum} + R_{AirGap}\right) + \left(\frac{1}{\left(0.2798 + 0.8929 \times \left(\left(\frac{1}{R_{AddedInsulation}}\right) + U_{CenterofGlass}\right)\right)}\right)\right]}$$ Equation 4-9

Aluminum With Thermal Break

$$U_{Overall} = \frac{1}{\left[\left(R_{Gypsum} + R_{AirGap}\right) + \left(\frac{1}{\left(0.1808 + 0.8874 \times \left(\left(\frac{1}{R_{AddedInsulation}}\right) + U_{CenterofGlass}\right)\right)}\right)\right]}$$ Equation 4-

10

Structural Glazing

$$U_{Overall} = \frac{1}{\left[\left(R_{Gypsum} + R_{AirGap}\right) + \left(\frac{1}{\left(0.1151 + 0.9487 \times \left(\left(\frac{1}{R_{AddedInsulation}}\right) + U_{CenterofGlass}\right)\right)}\right)\right]}$$

Equation 4-11

Table 4.3.9 – U-factors for Metal Building Walls

Insulation System	Rated R-Value of Insulation		Continuous Rigid Insulation							
			None	R-2	R-4	R-6	R-7	R-8	R-10	R-14
			A	B	C	D	E	F	G	H
Single Layer of Batt Insulation	None	1	1.18	0.351	0.206	0.146	0.127	0.113	0.092	0.067
	R-6	2	0.184	0.135	0.106	0.087	0.080	0.074	0.065	0.051
	R-10	3	0.134	0.106	0.087	0.074	0.069	0.065	0.057	0.047
	R-11	4	0.123	0.099	0.082	0.071	0.066	0.062	0.055	0.045
	R-13	5	0.113	0.092	0.078	0.067	0.063	0.059	0.053	0.044
Double Layer of Batt Insulation	R-6 + R-13	6	0.07	0.061	0.055	0.049	0.047	0.045	0.041	0.035
	R-10 + R-13	7	0.061	0.054	0.049	0.045	0.043	0.041	0.038	0.033
	R-13 + R-13	8	0.057	0.051	0.046	0.042	0.041	0.039	0.036	0.032
	R-19 + R-13	9	0.048	0.044	0.040	0.037	0.036	0.035	0.032	0.029

Double layer or batt insulation may not be able to have Continuous rigid insulation added.

The U-factors in this table are intended for use with metal building walls. This type of construction is typical for manufacturing and warehouse facilities, but is used for other building types as well. The typical method of insulating this type of building is to stretch vinyl backed fiberglass insulation over the metal girts before the metal siding is attached with metal screws. With this method, the insulation is compressed at each girt, reducing its effectiveness. The first part of the table contains values for this insulation technique. The second section of the table has data for systems that have two layers of insulation. In this section layers are listed from inside to outside.

For the majority of cases, values will be selected from column A of this table. Builders or designers may increase thermal performance by adding a rigid continuous insulation layer between the metal siding and the structural supports. When this table is used manually, the R-value of continuous insulation shall be equal to or greater than the R-value published in the continuous insulation columns. No interpolation is permitted when data from the table is used manually. Energy Commission approved compliance software, however, may determine the U-factor for any amount of continuous insulation using Equation 4-1.

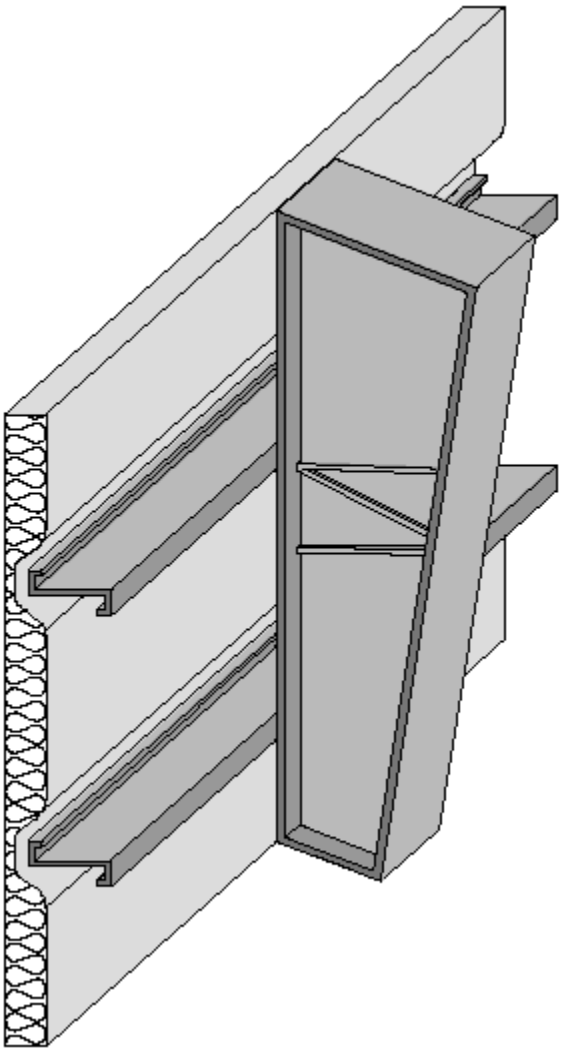

Figure 4.3.9 – Metal Building Wall

Assumptions: Data in Column A of this table is taken from the ASHRAE/IESNA Standard 90.1-2004, Appendix A. The data in columns beyond A are calculated using Equation 4-1.

Table 4.3.10 – U-factors for Insulated Metal Panel Walls

		U-factor (Btu/^{0}F-ft^2)
Panel Thickness		**A**
2”	**1**	0.078
2 ½”	**2**	0.063
3”	**3**	0.053
4”	**4**	0.041
5”	**5**	0.033
6”	**6**	0.027

This table contains thermal performance data (U-factors) for foamed-in-place, insulated metal panels consisting of liquid polyurethane or polyisocyanurate injected between metal skins in individual molds or on fully automated production lines. Metal building construction is the most common application for this product where the metal panel is fastened to the frame of the structure. This table can only be used for insulated panels that are factory built. This table does not apply to panels that utilize polystyrene, or to field applied products such as spray applied insulations.

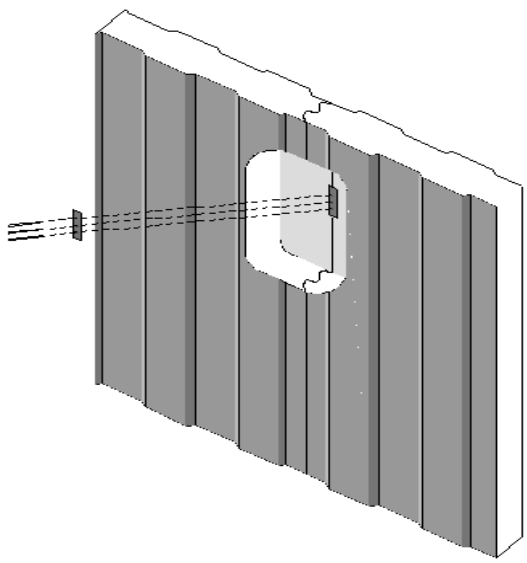

Figure 4.3.10 –Insulated Metal Panel Walls

Assumptions. These data are calculated using the parallel path method documented in the 2009 ASHRAE Handbook of Fundamentals. These calculations assume an exterior air film of R-0.17, light gauge metal exterior of 0.0747 inch thickness, continuous insulation R-5.9 per inch, light gauge metal interior of 0.0747 inch thickness, interior air film (heat flow horizontal) of R-0.68. The panels are assumed to be continuous with no framing penetration. The R-value of the metal is negligible.

Table 4.3.11 – Thermal Properties of Log Home Walls

		U-factor	Heat Capacity (HC)
Log Diameter		A	
6”	**1**	0.133	4.04
8”	**2**	0.102	6.06
10”	**3**	0.083	6.73
12”	**4**	0.070	8.08
14”	**5**	0.060	9.42
16”	**6**	0.053	10.77

This table has U-factors and heat capacity data for log homes Data is provided for logs in six thicknesses ranging from 6 in. to 16 in. If other thermal properties are needed such as density, weight, conductivity, etc., use the procedures in Modeling Constructions in the Nonresidential compliance software and contained in Section 4.6 of this document. Energy Commission approved Compliance Software Programs may adjust the data for interior furring using data from Table 4.3.14 and the procedure from Equation 4-2.

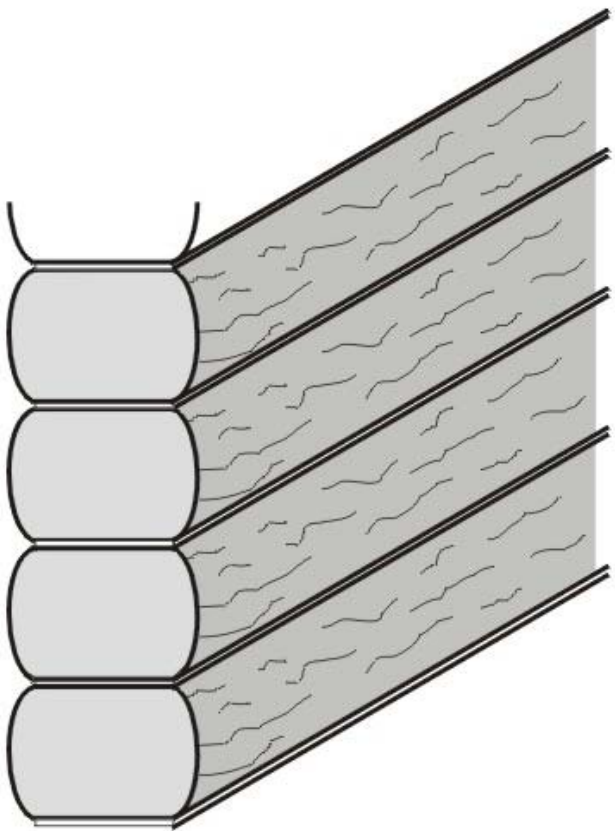

Figure 4.3.11 – Log Home Walls

Assumptions: Calculations are based on ASHRAE series method of calculation, 2009 ASHRAE Handbook of Fundamentals. Values assume a log R-value of R-1.25/inch, an average wall thickness of 90 percent of the log diameter, an interior air film of R-0.68 and an exterior air film of R-0.17. Values do not account for presence of windows or doors. Construction assumes no additional siding or insulation. Heat Capacity is based on a hardwood density of 26.6 lb/ft³ and a specific heat of 0.39 Btu/lb-ºF. An exterior air film of R-0.17 and an interior film of R-0.68 are assumed.

Table 4.3.12 – Thermal and Mass Properties of Straw Bale Walls

		A
R-value	1	30
U-factor		0.033
Heat CapacityBtu/ft^2*°F]		2.24

This table has data that may be used for straw bale construction. This is an alternative construction technique used in some rural areas. The technique is not commonly used for production homes.

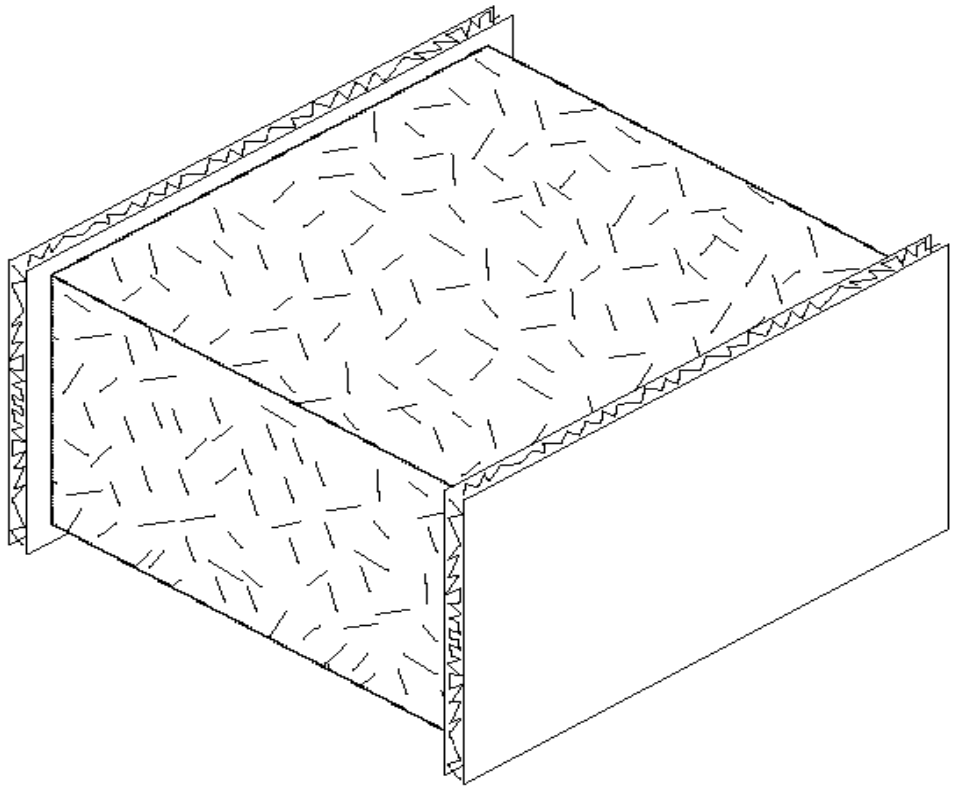

Figure 4.3.12 – Straw Bale Wall

Assumptions: The construction consists of an exterior film of R-0.17, stucco and lath of R-0.18, the straw bale, interior plaster of R-0.47, and an interior air film of 0.68. Straw bale must have a minimum cross section of 22 inch by 16 inch, and shall have a thermal resistance of R-30, whether stacked so the walls are 23 inch wide or 16 inch wide. Due to the higher resistance to heat flow across the grain of the straws, a bale laid on edge with a nominal 16 inch horizontal thickness has the same R-value (R-30) as a bale laid flat. Framing is assumed to not penetrate more than 25 percent of the way through the straw bale.

Table 4.3.13 – Thermal Properties of Insulating Concrete Forms

Insulation Type	Insulation Thickness Per Side (Total R-Value)	Performance Factor		Flat[1]					Waffle Grid[2]		Screen Grid[2]
				Concrete Core Thickness (inches)							
				4	6	8	10	12	6	8	6
				A	B	C	D	E	F	G	H
EPS[3]	2.0 (15.4)	U-factor	1	0.058	0.057	0.056	0.055	0.055	0.047	0.039	0.041
		HC		12.20	17.00	21.80	26.60	31.40	13.90	15.87	12.10
	2.25 (18.9)	U-factor	2	0.052	0.051	0.051	0.050	0.050	0.043	0.036	0.038
		HC		12.22	17.02	21.82	26.62	31.42	13.92	15.89	12.11
	2.5 (19.25)	U-factor	3	0.047	0.047	0.046	0.046	0.045	0.040	0.034	0.036
		HC		12.24	17.04	21.84	26.64	31.44	13.94	15.91	12.13
	2.625 (20.2)	U-factor	4	0.045	0.045	0.044	0.044	0.043	0.038	0.033	0.035
		HC		12.25	17.05	21.85	26.65	31.45	13.95	15.92	12.14
	2.75 (21.2)	U-factor	5	0.043	0.043	0.042	0.042	0.042	0.037	0.032	0.0323
		HC		12.26	17.06	21.86	26.66	31.46	13.96	15.92	12.15
	3.0 (23.1)	U-factor	6	0.040	0.040	0.039	0.039	0.039	0.0334	0.030	0.031
		HC		12.27	17.07	21.87	26.67	31.47	13.98	15.94	12.17
	3.5 (27.0)	U-factor	7	0.035	0.034	0.034	0.034	0.034	0.030	0.027	0.028
		HC		12.31	17.11	21.91	26.71	31.51	14.01	15.98	12.21
	4.0 (30.8)	U-factor	8	0.031	0.030	0.030	0.030	0.030	0.027	0.024	0.025
		HC		12.35	17.15	21.95	26.75	31.55	14.05	16.02	12.24
XPS	2.0 (20.0)	U-factor	9	0.045	0.045	0.045	0.044	0.044	NA	NA	NA
		HC		12.29	17.09	21.89	26.69	31.49	NA	NA	NA
	2.5 (25.0)	U-factor	10	0.037	0.037	0.036	0.036	0.036	NA	NA	NA
		HC		12.35	17.15	21.95	26.75	31.55	NA	NA	NA
	2.625 (26.3)	U-factor	11	0.035	0.035	0.035	0.035	0.034	NA	NA	NA
		HC		12.36	17.16	21.96	26.76	31.56	NA	NA	NA
	2.75 (27.5)	U-factor	12	0.034	0.034	0.033	0.033	0.033	NA	NA	NA
		HC		12.38	17.18	21.98	26.78	31.58	NA	NA	NA
	3.0 (30.0)	U-factor	13	0.031	0.031	0.031	0.031	0.030	NA	NA	NA
		HC		12.41	17.21	22.01	26.81	31.61	NA	NA	NA
	3.5 (35.0)	U-factor	14	0.027	0.027	0.027	0.027	0.026	NA	NA	NA
		HC		12.46	17.26	22.06	26.86	31.66	NA	NA	NA
	4.0 (40)	U-factor	15	0.024	0.024	0.024	0.023	0.023	NA	NA	NA
		HC		12.52	17.32	22.12	26.92	31.72	NA	NA	NA
Polyurethane	1.5 (9.09)	U-factor	16	0.050	0.049	0.049	0.048	0.048	NA	NA	NA
		HC		12.23	17.03	21.83	26.63	31.43	NA	NA	NA
	2.0 (10.9)	U-factor	17	0.042	0.042	0.041	0.041	0.041	NA	NA	NA
		HC		12.41	17.21	22.01	26.81	31.61	NA	NA	NA
	4.5 (20.95)	U-factor	18	0.023	0.023	0.023	0.022	0.022	NA	NA	NA
		HC		12.58	17.38	22.18	26.98	31.78	NA	NA	NA
Cement/EPS Compound	2.0 (12.0)	U-factor	19	NA	NA	NA	NA	NA	0.059	0.048	0.052
		HC		NA	NA	NA	NA	NA	16.49	18.46	14.69
	3.0 (18.0)	U-factor	20	NA	NA	NA	NA	NA	0.043	0.037	0.040
		HC		NA	NA	NA	NA	NA	17.50	19.47	15.69
	4.0 (24.0)	U-factor	21	NA	NA	NA	NA	NA	0.034	0.031	0.032
		HC		NA	NA	NA	NA	NA	18.51	20.47	16.70

Notes:

[1] Flat Insulated Concrete Forms utilizes rigid insulation as the form and do not use cement compound as the form.

[2] Waffle and screen type Insulated Concrete Forms typically utilize either a cement/EPS compound or EPS insulation as the form. ICF's using the cement/EPS compound do not utilize rigid insulation added to the interior and exterior surfaces.

[3] 1.5 lb density EPS insulation at R-3.85 per inch except for the 2.25" insulation thickness which uses 2.0 lb density EPS at R-4.2 per inch.

This table provides thermal performance information for insulating concrete forms.

Insulating Concrete Forms (ICFs) are concrete forming systems that use stay-in-place panels made from a variety of insulating materials for constructing cast-in-place solid concrete walls. There are three basic types of ICFs: flat wall, waffle-grid and screen-grid. A flat wall system is a wall with uniform thickness just like a conventional poured wall made with plywood or metal forms. Waffle-grid wall systems have a solid concrete wall of varying thickness and look like a breakfast waffle. Screen grid wall systems also known as , "post and beam", have a perforated concrete wall of varying thickness similar to the waffle type wall systems but with a solid form material between the horizontal and vertical members instead of concrete. The insulating panels for all three ICF types are most commonly made from expanded polystyrene (EPS) and extruded polystyrene

(XPS) rigid insulation boards. Plastic or metal cross-ties separate the insulating panels and provide structural integrity during the pour. The ICF system is modular and stackable with interlocking edges. The materials can be delivered as pre-assembled blocks or as planks that require the flanges and web to be assembled during construction.

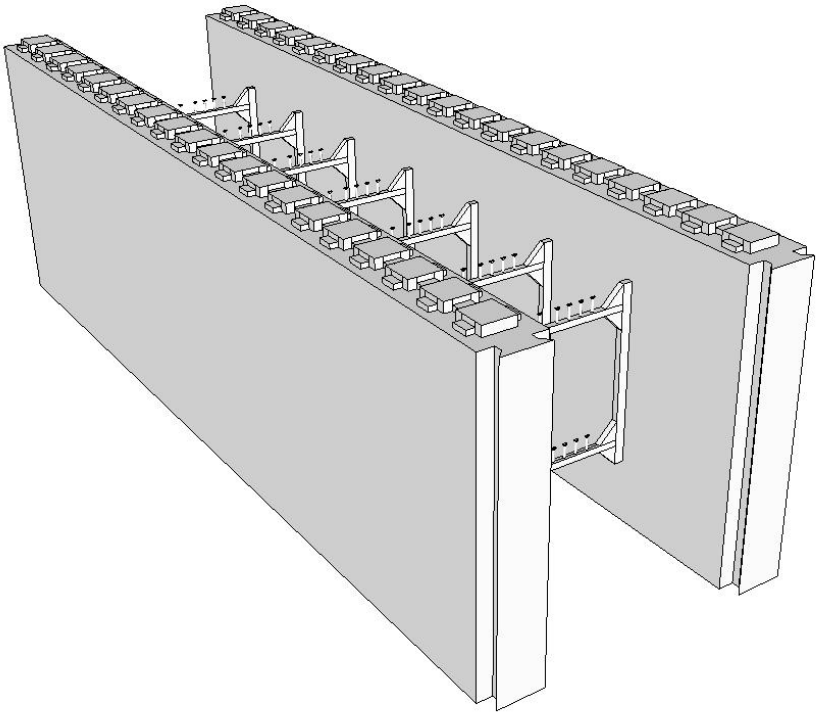

Figure 4.3.13 – Insulating Concrete Forms

Assumptions: Values in this table were calculated using the one dimensional calculation method documented in 2009 ASHRAE Handbook of Fundamentals. The calculations assume an exterior air film of R-0.17, a 7/8 inch layer of stucco of R-0.18, building paper of R-0.06, an exterior insulating form of varying resistance, a concrete core of varying thickness at R-0.11 per inch, an interior insulating form of varying resistance, and an interior air film of R-0.68. The R-value of the cement/EPC compound is assumed to be R-3.0 per inch, the XPS insulation assumed to be R-5.0 per inch, and the polyurethane assumed to be aged and dried in 1.5 inch, 2.0 inch, and 4.5 inch thickness.

Table 4.3.14 – Effective R-values for Interior or Exterior Insulation Layers

			R-value of Insulation Installed in Furring Space																					
			0	**1**	**2**	**3**	**4**	**5**	**6**	**7**	**8**	**9**	**10**	**11**	**12**	**13**	**14**	**15**	**16**	**17**	**18**	**19**	**20**	**21**
Thick-ness	**Frame Type**		**A**	**B**	**C**	**D**	**E**	**F**	**G**	**H**	**I**	**J**	**K**	**L**	**M**	**N**	**O**	**P**	**Q**	**R**	**S**	**T**	**U**	**V**
Any	None	**1**	0.5	1.5	2.5	3.5	4.5	5.5	6.5	7.5	8.5	9.5	10.5	11.5	12.5	13.5	14.5	15.5	16.5	17.5	18.5	19.5	20.5	21.5
0.5"	Wood	**2**	1.3	1.3	1.9	2.4	2.7	n.a.	n.a.	n.a.	n.a.	n.a.	n.a.	n.a.	n.a.	n.a.	n.a.	n.a.	n.a.	n.a.	n.a.	n.a.	n.a.	n.a.
	Metal	**3**	0.9	0.9	1.1	1.1	1.2	n.a.	n.a.	n.a.	n.a.	n.a.	n.a.	n.a.	n.a.	n.a.	n.a.	n.a.	n.a.	n.a.	n.a.	n.a.	n.a.	n.a.
0.75"	Wood	**4**	1.4	1.4	2.1	2.7	3.1	3.5	3.8	n.a.	n.a.	n.a.	n.a.	n.a.	n.a.	n.a.	n.a.	n.a.	n.a.	n.a.	n.a.	n.a.	n.a.	n.a.
	Metal	**5**	1.0	1.0	1.3	1.4	1.5	1.5	1.6	n.a.	n.a.	n.a.	n.a.	n.a.	n.a.	n.a.	n.a.	n.a.	n.a.	n.a.	n.a.	n.a.	n.a.	n.a.
1.0"	Wood	**6**	1.3	1.5	2.2	2.9	3.4	3.9	4.3	4.6	4.9	n.a.	n.a.	n.a.	n.a.	n.a.	n.a.	n.a.	n.a.	n.a.	n.a.	n.a.	n.a.	n.a.
	Metal	**7**	1.0	1.1	1.4	1.6	1.7	1.8	1.8	1.9	1.9	n.a.	n.a.	n.a.	n.a.	n.a.	n.a.	n.a.	n.a.	n.a.	n.a.	n.a.	n.a.	n.a.
1.5"	Wood	**8**	1.3	1.5	2.4	3.1	3.8	4.4	4.9	5.4	5.8	6.2	6.5	6.8	7.1	n.a.	n.a.	n.a.	n.a.	n.a.	n.a.	n.a.	n.a.	n.a.
	Metal	**9**	1.1	1.2	1.6	1.9	2.1	2.2	2.3	2.4	2.5	2.5	2.6	2.6	2.7	n.a.	n.a.	n.a.	n.a.	n.a.	n.a.	n.a.	n.a.	n.a.
2"	Wood	**10**	1.4	1.5	2.5	3.3	4.0	4.7	5.3	5.9	6.4	6.9	7.3	7.7	8.1	8.4	8.7	9.0	9.3	n.a.	n.a.	n.a.	n.a.	n.a.
	Metal	**11**	1.1	1.2	1.7	2.1	2.3	2.5	2.7	2.8	2.9	3.0	3.1	3.2	3.2	3.3	3.3	3.4	3.4	n.a.	n.a.	n.a.	n.a.	n.a.
2.5"	Wood	**12**	1.4	1.5	2.5	3.4	4.2	4.9	5.6	6.3	6.8	7.4	7.9	8.4	8.8	9.2	9.6	10.0	10.3	10.6	10.9	11.2	11.5	n.a.
	Metal	**13**	1.2	1.3	1.8	2.3	2.6	2.8	3.0	3.2	3.3	3.5	3.6	3.6	3.7	3.8	3.9	3.9	4.0	4.0	4.1	4.1	4.1	n.a.
3"	Wood	**14**	1.4	1.5	2.5	3.5	4.3	5.1	5.8	6.5	7.2	7.8	8.3	8.9	9.4	9.9	10.3	10.7	11.1	11.5	11.9	12.2	12.5	12.9
	Metal	**15**	1.2	1.3	1.9	2.4	2.8	3.1	3.3	3.5	3.7	3.8	4.0	4.1	4.2	4.3	4.4	4.4	4.5	4.6	4.6	4.7	4.7	4.8
3.5"	Wood	**16**	1.4	1.5	2.6	3.5	4.4	5.2	6.0	6.7	7.4	8.1	8.7	9.3	9.8	10.4	10.9	11.3	11.8	12.2	12.6	13.0	13.4	13.8
	Metal	**17**	1.2	1.3	2.0	2.5	2.9	3.2	3.5	3.8	4.0	4.2	4.3	4.5	4.6	4.7	4.8	4.9	5.0	5.1	5.1	5.2	5.2	5.3
4"	Wood	**18**	1.4	1.6	2.6	3.6	4.5	5.3	6.1	6.9	7.6	8.3	9.0	9.6	10.2	10.8	11.3	11.9	12.4	12.8	13.3	13.7	14.2	14.6
	Metal	**19**	1.2	1.3	2.0	2.6	3.0	3.4	3.7	4.0	4.2	4.5	4.6	4.8	5.0	5.1	5.2	5.3	5.4	5.5	5.6	5.7	5.8	5.8
4.5"	Wood	**20**	1.4	1.6	2.6	3.6	4.5	5.4	6.2	7.1	7.8	8.5	9.2	9.9	10.5	11.2	11.7	12.3	12.8	13.3	13.8	14.3	14.8	15.2
	Metal	**21**	1.2	1.3	2.1	2.6	3.1	3.5	3.9	4.2	4.5	4.7	4.9	5.1	5.3	5.4	5.6	5.7	5.8	5.9	6.0	6.1	6.2	6.3
5"	Wood	**22**	1.4	1.6	2.6	3.6	4.6	5.5	6.3	7.2	8	8.7	9.4	10.1	10.8	11.5	12.1	12.7	13.2	13.8	14.3	14.8	15.3	15.8
	Metal	**23**	1.2	1.4	2.1	2.7	3.2	3.7	4.1	4.4	4.7	5.0	5.2	5.4	5.6	5.8	5.9	6.1	6.2	6.3	6.5	6.6	6.7	6.8
5.5"	Wood	**24**	1.4	1.6	2.6	3.6	4.6	5.5	6.4	7.3	8.1	8.9	9.6	10.3	11.0	11.7	12.4	13.0	13.6	14.2	14.7	15.3	15.8	16.3
	Metal	**25**	1.3	1.4	2.1	2.8	3.3	3.8	4.2	4.6	4.9	5.2	5.4	5.7	5.9	6.1	6.3	6.4	6.6	6.7	6.8	7.0	7.1	7.2
EIFS		**26**	0.0	1.0	2.0	3.0	4.0	5.0	6.0	7.0	8.0	9.0	10.0	11.0	12.0	13.0	14.0	15.0	16.0	17.0	18.0	19.0	20.0	21.0

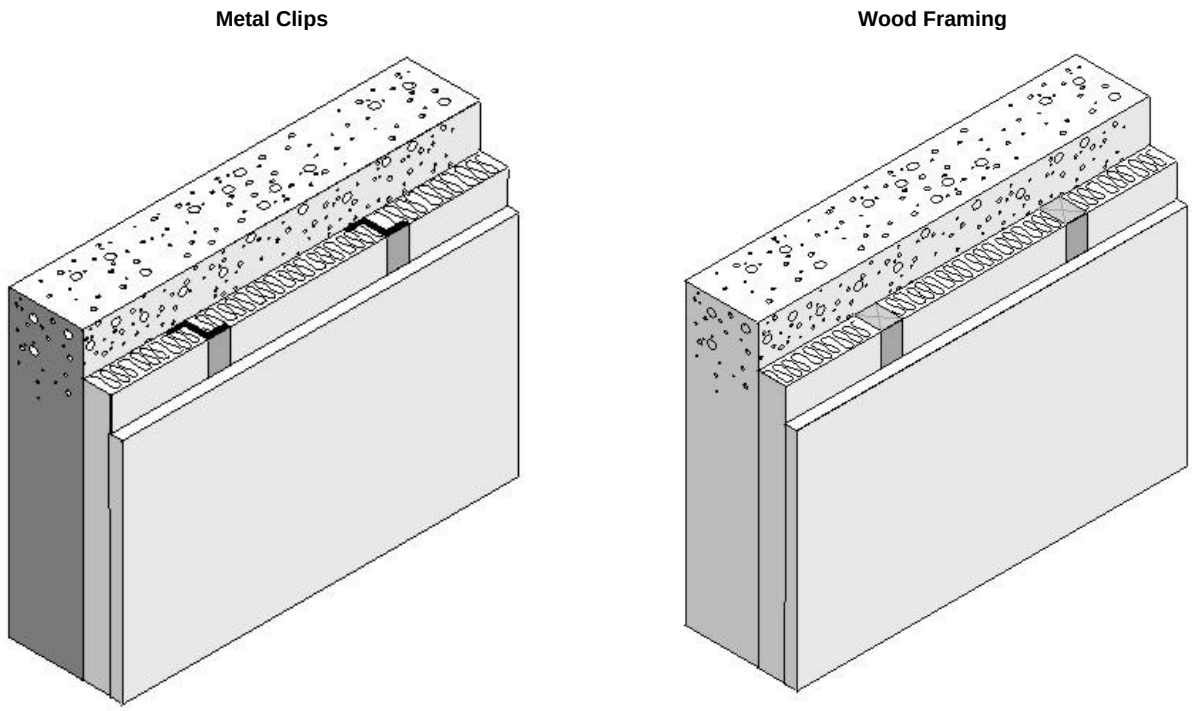

Figure 4.3.14 – Interior or Exterior Insulation Layers

This table is used in combination with other tables and Equation 4-1 and Equation 4-2 to account for interior furring and continuous insulation added to other constructions.

Assumptions: Data is taken from ASHRAE/IESNA Standard 90.1-2004 All furring thickness values given are actual dimensions. All values include 0.5 inch gypsum board on the inner surface, interior surface resistances not included. The metal furring is 24 inch on center, 24 guage, Z-type Metal Furring. The wood furring is 24 inch on center, Douglas-Fir Larch Wood Furring, density = 34.9 lb/ft^3. Insulation assumed to fill the furring space.

4.4 Floors and Slabs

Table 4.4.1 – Standard U-factors for Wood-Framed Floors with a Crawl Space

Framing Spacing	Nominal Framing Size	R-Value Cavity Insul.		Rated R-value of Continuous Insulation							
				R-0	R-2	R-4	R-6	R-7	R-8	R-10	R-14
				A	B	C	D	E	F	G	H
16 in. OC	Any 2 x 6	None	**1**	0.097	0.081	0.070	0.061	0.058	0.055	0.049	0.041
		R-11	**2**	0.049	0.045	0.041	0.038	0.037	0.035	0.033	0.029
		R-13	**3**	0.046	0.042	0.039	0.036	0.035	0.033	0.031	0.028
		R-19	**4**	0.037	0.034	0.032	0.030	0.029	0.029	0.027	0.024
	2 x 8	R-19	**5**	0.037	0.034	0.032	0.030	0.029	0.029	0.027	0.024
		R-22	**6**	0.034	0.032	0.030	0.028	0.027	0.027	0.025	0.023
	2 x 10	R-25	**7**	0.031	0.029	0.028	0.026	0.025	0.025	0.024	0.022
		R-30	**8**	0.028	0.026	0.025	0.024	0.023	0.023	0.022	0.020
	2 x 12	R-38	**9**	0.024	0.023	0.022	0.021	0.020	0.020	0.019	0.018
24 in. OC	Any 2 x 6	None	**10**	0.098	0.082	0.070	0.062	0.058	0.055	0.049	0.041
		R-11	**11**	0.049	0.045	0.041	0.038	0.036	0.035	0.033	0.029
		R-13	**12**	0.045	0.041	0.038	0.035	0.034	0.033	0.031	0.028
		R-19	**13**	0.037	0.034	0.032	0.030	0.029	0.028	0.027	0.024
	2 x 8	R-19	**14**	0.036	0.034	0.032	0.030	0.029	0.028	0.027	0.024
		R-22	**15**	0.033	0.031	0.029	0.028	0.027	0.026	0.025	0.023
	2 x 10	R-25	**16**	0.030	0.029	0.027	0.026	0.025	0.024	0.023	0.021
		R-30	**17**	0.027	0.026	0.024	0.023	0.023	0.022	0.021	0.020
	2 x 12	R-38	**18**	0.023	0.022	0.021	0.020	0.020	0.020	0.019	0.017

Notes:

1. In order to use the U-factors listed in this section, exterior raised-floor insulation shall be installed between floor joists with a means of support that prevents the insulation from falling, sagging or deteriorating. Two approaches that accomplish this are:
2. Nailing insulation hangers 18 inches apart prior to rolling out the insulation. Hangers are heavy wires up to 48 inches long with pointed ends, which provide positive wood penetration.
3. Attaching wire mesh to form a basket between joists to support the insulation. Mesh is nailed or stapled to the underside of the joists.

This table contains U-factors for wood framed floors built over a ventilated crawlspace. This construction is common for low-rise residential buildings and for Type IV nonresidential buildings.

If continuous insulation is not used, then choices are made from Column A. In this case, the insulation is installed only between the framing members. Continuous insulation is not common for wood floors over a crawlspace, but if credit is taken, the insulation may be installed either above or below the framing members. The continuous insulation is typically a rigid polystyrene or polyisocyanurate foam insulation.

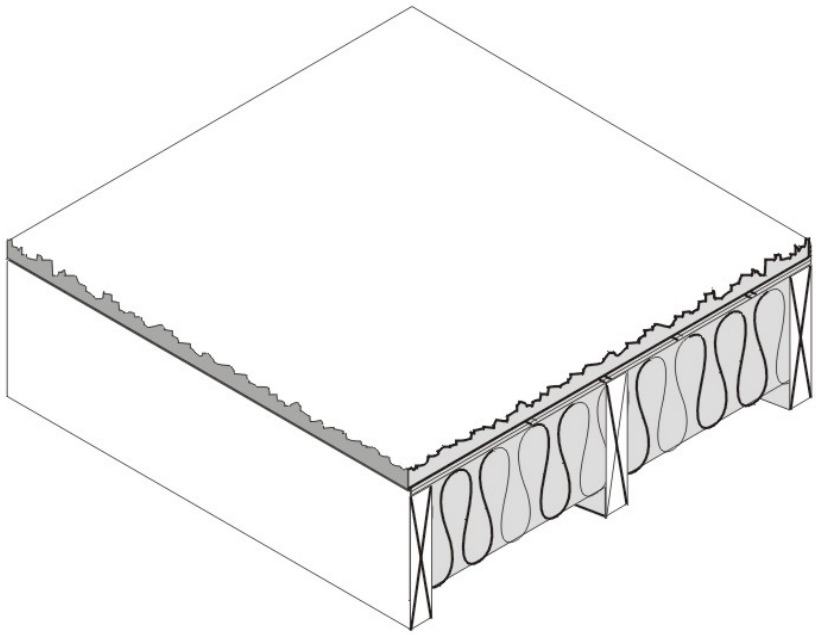

Figure 4.4.1 – Wood Framed Floor with a Crawl Space

When this table is used manually, the R-value of continuous insulation shall be equal to or greater than the R-value published in the continuous insulation columns. Continuous insulation of at least R-2 must exist in order to use columns B and beyond. No interpolation is permitted when data from the table is used manually. CEC approved compliance software, however, may determine the U-factor for any amount of continuous insulation or for unusual construction assemblies using Equation 4-1 and Equation 4-2.

If the crawlspace is not ventilated and is modeled as a controlled ventilation crawlspace (CVC), then values from this table shall not be used. Values from Table 4.21 shall be used instead and the crawlspace shall be modeled as a separate and unconditioned zone.

Assumptions: Calculations use the ASHRAE parallel heat flow method documented in the 2005 ASHRAE Handbook of Fundamentals. These calculations assume an exterior air film of R-0.17, a vented crawlspace for an effective R-6, a continuous insulation layer (if any), the insulation / framing layer, 5/8 inch wood based sheathing (Custom), carpet and pad of R-2.08 (CP01), and an interior air film (heat flow down) of R-0.92. The framing factor is assumed to be 10 percent for 16 inch stud spacing and 7 percent for 24 inch spacing.

Table 4.4.2 – Standard U-factors for Wood Framed Floors without a Crawl Space

Spacing	Nominal Framing Size	R-Value of Cavity Insul.		Rated R-value of Continuous Insulation							
				R-0	R-2	R-4	R-6	R-7	R-8	R-10	R-14
				A	B	C	D	E	F	G	H
16 in. OC	Any	None	**1**	0.238	0.161	0.122	0.098	0.089	0.082	0.070	0.055
	2 x 6	R-11	**2**	0.071	0.062	0.055	0.050	0.047	0.045	0.041	0.036
	(5.50 in)	R-13	**3**	0.064	0.057	0.051	0.046	0.044	0.042	0.039	0.034
		R-19	**4**	0.049	0.044	0.040	0.037	0.036	0.035	0.032	0.028
	2 x 8	R-19	**5**	0.048	0.044	0.040	0.037	0.036	0.035	0.033	0.029
	(7.25 in.)	R-22	**6**	0.044	0.040	0.037	0.035	0.033	0.032	0.030	0.027
	2 x 10	R-25	**7**	0.039	0.036	0.034	0.031	0.030	0.030	0.028	0.025
	(9.25 in.)	R-30	**8**	0.034	0.032	0.030	0.028	0.028	0.027	0.025	0.023
	2 x 12	R-38	**9**	0.029	0.027	0.026	0.024	0.024	0.023	0.022	0.020
	(11.25 in.)										
24 in. OC	Any	None	**10**	0.243	0.163	0.123	0.099	0.090	0.083	0.071	0.055
	2 x 6	R-11	**11**	0.070	0.061	0.054	0.049	0.047	0.045	0.041	0.035
	(5.50 in.)	R-13	**12**	0.062	0.055	0.050	0.045	0.043	0.042	0.038	0.033
		R-19	**13**	0.047	0.043	0.039	0.037	0.035	0.034	0.032	0.028
	2 x 8	R-19	**14**	0.047	0.043	0.039	0.037	0.035	0.034	0.032	0.028
	(7.25 in.)	R-22	**15**	0.042	0.039	0.036	0.034	0.033	0.032	0.030	0.026
	2 x 10	R-25	**16**	0.037	0.035	0.033	0.031	0.030	0.029	0.027	0.025
	(9.25 in.)	R-30	**17**	0.033	0.031	0.029	0.027	0.027	0.026	0.025	0.022
	2 x 12	R-38	**18**	0.027	0.026	0.025	0.023	0.023	0.022	0.021	0.020
	(11.25 in.)										

This table contains U-factors for wood framed floors that are exposed to ambient (outdoor) conditions. This construction is common for low-rise residential buildings and for Type 4 nonresidential buildings.

If continuous insulation is not used, then choices are made from Column A. In this case, the insulation is installed only between the framing members. If credit is taken for continuous insulation, the insulation may be installed either above or below the framing members.

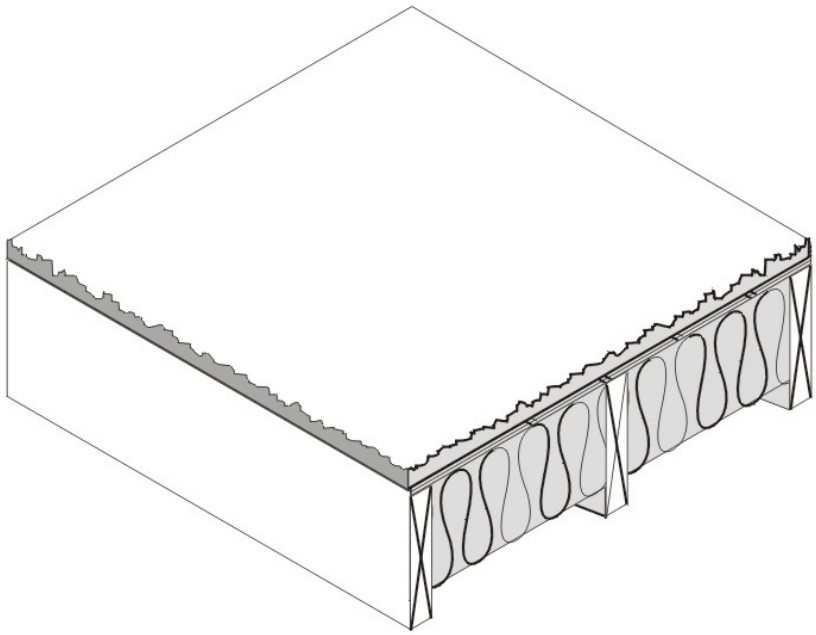

Figure 4.4.2 – Wood Framed Floor without a Crawl Space

When this table is used manually, the R-value of continuous insulation shall be equal to or greater than the R-value published in the continuous insulation columns. No interpolation is permitted when data from the table is used manually. CEC approved compliance software, however, may determine the U-factor for any amount of continuous insulation or for unusual construction assemblies using Equation 4-1 and Equation 4-2.

Assumptions: Calculations use the ASHRAE parallel heat flow method documented in the 2009 ASHRAE Handbook of Fundamentals. These calculations assume an exterior air film of R-0.17, a continuous insulation layer (if any), the cavity insulation / framing layer, 5/8 inch wood based sheathing (Custom), carpet and pad of R-2.08 (CP01), and an interior air film (heat flow down) of R-0.92.

Table 4.4.3 – Standard U-factors for Wood Foam Panel (SIP) Floors

Crawlspace	Insulation R-value[1]	Wood Framing Spline Connection Type (Splines)	Typical Panel Thickness		Rated R-value of Continuous Insulation [3]						
					None	R-2	R-4	R-6	R-7	R-8	R-10
					A	B	C	D	E	F	G
YES	R-22	Single 2x	6.5 in	**1**	0.033	0.030	0.029	0.027	0.026	0.026	0.024
	R-22	Double 2x	6.5 in	**2**	0.034	0.031	0.029	0.028	0.027	0.026	0.025
	R-22	I-Joist	6.5 in	**3**	0.032	0.030	0.028	0.027	0.026	0.025	0.024
	R-28	Single 2x	8.25 in	**4**	0.027	0.026	0.024	0.023	0.023	0.022	0.021
	R-28	Double 2x	8.25 in	**5**	0.028	0.026	0.025	0.024	0.023	0.023	0.022
	R-28	I-Joist	8.25 in	**6**	0.027	0.025	0.024	0.023	0.022	0.022	0.021
	R-33[2]	Single 2x	6.5 in	**7**	0.024	0.023	0.022	0.021	0.021	0.020	0.019
	R-33[2]	Double 2x	6.5 in	**8**	0.026	0.024	0.023	0.022	0.021	0.021	0.020
	R-33[2]	I-Joist	6.5 in	**9**	0.024	0.023	0.022	0.021	0.020	0.020	0.019
	R-36	Single 2x	10.25 in	**10**	0.023	0.022	0.021	0.020	0.019	0.019	0.018
	R-36	Double 2x	10.25 in	**11**	0.024	0.022	0.021	0.020	0.020	0.020	0.019
	R-36	I-Joist	10.25 in	**12**	0.022	0.021	0.020	0.019	0.019	0.019	0.018
NO	R-22	Single 2x	6.5 in	**13**	0.041	0.038	0.035	0.033	0.031	0.030	0.029
	R-22	Double 2x	6.5 in	**14**	0.043	0.039	0.036	0.034	0.032	0.031	0.029
	R-22	I-Joist	6.5 in	**15**	0.040	0.037	0.034	0.032	0.031	0.030	0.028
	R-28	Single 2x	8.25 in	**16**	0.033	0.030	0.029	0.027	0.026	0.026	0.024
	R-28	Double 2x	8.25 in	**17**	0.034	0.032	0.030	0.028	0.027	0.026	0.025
	R-28	I-Joist	8.25 in	**18**	0.032	0.030	0.028	0.027	0.026	0.025	0.024
	R-33[2]	Single 2x	6.5 in	**19**	0.029	0.027	0.026	0.024	0.024	0.023	0.022
	R-33[2]	Double 2x	6.5 in	**20**	0.032	0.029	0.027	0.026	0.025	0.024	0.023
	R-33[2]	I-Joist	6.5 in	**21**	0.028	0.027	0.025	0.024	0.023	0.023	0.022
	R-36	Single 2x	10.25 in	**22**	0.026	0.025	0.024	0.023	0.022	0.022	0.021
	R-36	Double 2x	10.25 in	**23**	0.028	0.026	0.025	0.024	0.023	0.022	0.021
	R-36	I-Joist	10.25 in	**24**	0.026	0.024	0.023	0.022	0.021	0.021	0.020

Notes:

1. The insulation R-value must be at least R-21.7 in order to use this table. This table assumes moulded expanded polystyrene (EPS) unless noted otherwise. Although other insulation types are used by some SIP manufacturers, such as polyurethane and extruded expanded insulation (XPS), EPS is the most common insulation used in SIP construction.
2. R-33.2 is achievable using polyurethane insulation in 6.5" panels.
3. Continuous insulation shall be at least R-2 and may be installed on either the inside or the exterior of the roof/ceiling.

Structural insulated panels (SIPs) consist of a rigid insulation core, securely bonded between two structural facings, to form a structural sandwich panel. SIPs are considered a non-framed assembly usually with little or no structural framing that penetrates the insulation layer, resulting in less thermal bridging across the insulation when compared to a conventional framed assembly.

If continuous insulation is not used, then choices are made from Column A. When continuous insulation is also used, this is typically installed on the exterior side of the floor, but can also be used on the inside. The continuous insulation is typically a rigid polystyrene or polyisocyanurate foam insulation.

When this table is used manually, the R-value of continuous insulation shall be equal to or greater than the R-value published in the continuous insulation columns. Commission approved compliance software, however, may determine the U-factor for any amount of continuous insulation or for unusual construction assemblies using Equation 4-1 and Equation 4-2.

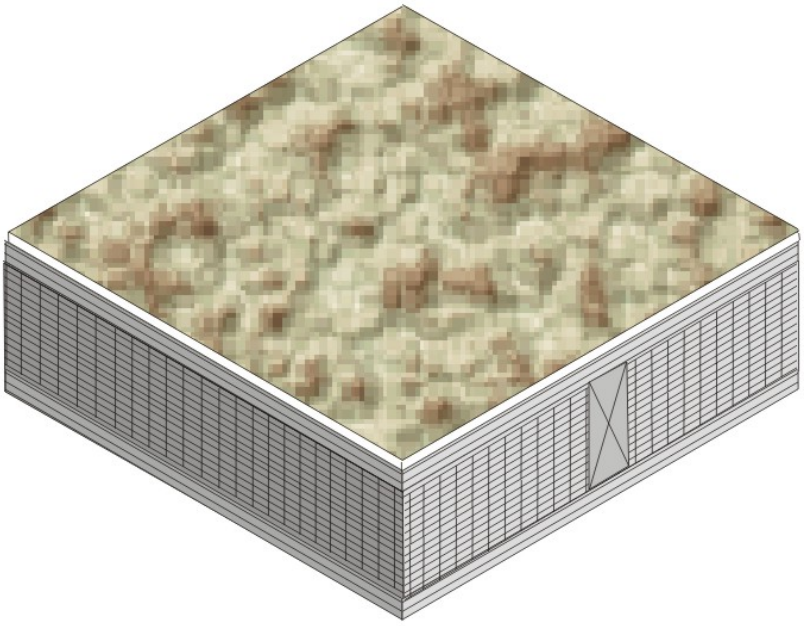

Figure 4.4.3 – Wood Foam Panel (SIP) Floor

Assumptions: These data are calculated using the parallel path method documented in the 2009 ASHRAE Handbook of Fundamentals. These calculations assume an exterior air film of R-0.17, a vented crawlspace of R-6, 7/16 inch of OSB at R-0.44, framing factor of 2%, 7/16 inch of OSB, carpet and pad of R-2.08 and an interior air film of R-0.92.

Table 4.4.4 – Standard U-factors for Metal-Framed Floors with a Crawl Space

Framing Spacing	Nominal Framing Size	Cavity Insulation R-Value:		Rated R-value of Continuous Insulation							
				R-0	R-2	R-4	R-6	R-7	R-8	R-10	R-14
				A	B	C	D	E	ºF	G	H
16 in. OC	Any	None	1	0.094	0.079	0.068	0.060	0.057	0.054	0.048	0.041
	2 x 6	R-11	2	0.065	0.058	0.052	0.047	0.045	0.043	0.039	0.034
		R-13	3	0.063	0.056	0.050	0.046	0.044	0.042	0.039	0.033
		R-19	4	0.059	0.053	0.048	0.044	0.042	0.040	0.037	0.032
	2 x 8	R-19	5	0.058	0.052	0.047	0.043	0.041	0.040	0.037	0.032
		R-22	6	0.056	0.050	0.046	0.042	0.040	0.039	0.036	0.031
	2 x 10	R-30	7	0.051	0.046	0.042	0.039	0.038	0.036	0.034	0.030
	2 x 12	R-38	8	0.048	0.044	0.040	0.037	0.036	0.035	0.032	0.029
24 in. OC	Any	None	9	0.094	0.079	0.068	0.060	0.057	0.054	0.048	0.041
	2 x 6	R-11	10	0.061	0.054	0.049	0.045	0.043	0.041	0.038	0.033
		R-13	11	0.058	0.052	0.047	0.043	0.041	0.040	0.037	0.032
		R-19	12	0.053	0.048	0.044	0.040	0.039	0.037	0.035	0.030
	2 x 8	R-19	13	0.051	0.046	0.042	0.039	0.038	0.036	0.034	0.030
		R-22	14	0.049	0.045	0.041	0.038	0.036	0.035	0.033	0.029
	2 x 10	R-30	15	0.045	0.041	0.038	0.035	0.034	0.033	0.031	0.028
	2 x 12	R-38	16	0.041	0.038	0.035	0.033	0.032	0.031	0.029	0.026

Notes:

In order to use the U-factors listed in this table, exterior raised-floor insulation shall be installed between floor joists with a means of support that prevents the insulation from falling, sagging or deteriorating. Two approaches that accomplish this are:

1. Attaching insulation hangers 18 inches apart prior to rolling out the insulation. Hangers are heavy wires up to 48 inches long with pointed ends.
2. Attaching wire mesh to form a basket between joists to support the insulation. Mesh is nailed or stapled to the underside of the joists.

This table contains U-factors for metal-framed floors built over a crawlspace. The constructions represented are similar to those in Table 4.4.1, except that wood framing is replaced with metal framing. Cavity insulation is installed between the framing members. Since the steel is not as large a cross section as wood, the insulation needs to be wider than that used with wood to fit in between the steel framing members.

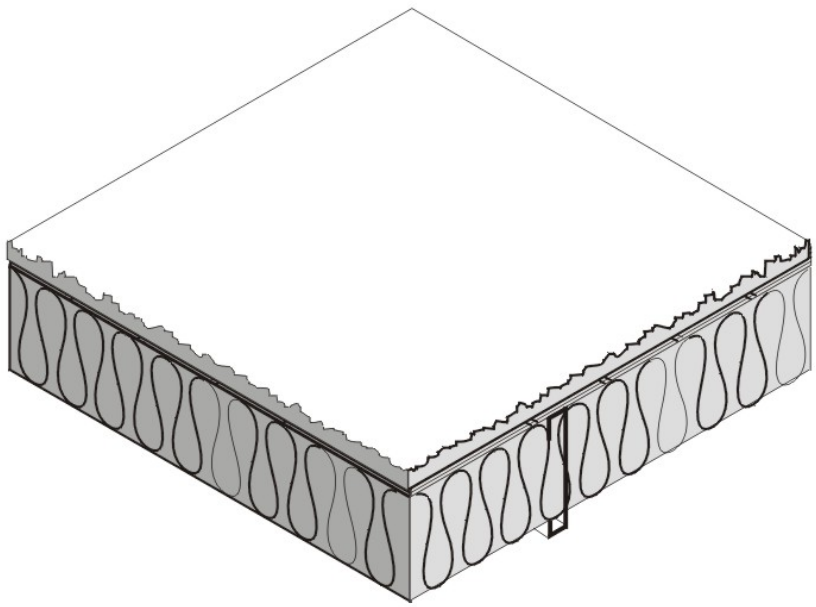

Figure 4.4.4 – Metal Framed Floors with a Crawl Space

For the majority of cases, values will be selected from column A of this table. Column A applies for the common situation where batt insulation is supported between framing members. Builders or designers may increase thermal performance by adding a continuous insulation layer either above or below the framing members.

When this table is used manually, the R-value of continuous insulation shall be equal to or greater than the R-value published in the continuous insulation columns. No interpolation is permitted when data from the table is used manually. CEC approved compliance software, however, may determine the U-factor for any amount of continuous insulation and for unusual construction layers using Equation 4-1 and Equation 4-2.

Assumptions: Calculations are based on the ASHRAE Zone Method Calculation, 2009 ASHRAE Handbook of Fundamentals These calculations assume an exterior air film of R-0.17, a vented crawlspace for an effective R-6, a continuous insulation layer (if any), the insulation / framing layer, 5/8 inch wood based sheathing (Custom), carpet and pad of R-2.08 (CP01), and an interior air film (heat flow down) of R-0.92. The effect of the crawlspace is approximated by an additional R-6 of insulation. The internal default framing percentages are 10 percent for 16 inch on center and 7 percent for 24 inch on center. Steel Framing has a 1.5 inch flange and is 0.075 inch thick steel (14 gauge) with no knockouts. U-factors are calculated using EZ frame 2.0.

Table 4.4.5 – Standard U-factors for Metal-Framed Floors without a Crawl Space

Spacing	Nominal Framing Size	Cavity Insulation R-Value		Rated R-value of Continuous Insulation							
				R-0	R-2	R-4	R-6	R-7	R-8	R-10	R-14
				A	B	C	D	E	F	G	H
16 in. OC	Any	None	**1**	0.253	0.168	0.126	0.100	0.091	0.084	0.072	0.056
	2 x 6	R-11	**2**	0.108	0.089	0.075	0.066	0.062	0.058	0.052	0.043
		R-13	**3**	0.102	0.085	0.072	0.063	0.060	0.056	0.050	0.042
		R-19	**4**	0.092	0.078	0.067	0.059	0.056	0.053	0.048	0.040
	2 x 8	R-19	**5**	0.088	0.075	0.065	0.058	0.054	0.052	0.047	0.039
		R-22	**6**	0.085	0.073	0.063	0.056	0.053	0.051	0.046	0.039
	2 x 10	R-30	**7**	0.075	0.065	0.058	0.052	0.049	0.047	0.043	0.037
	2 x 12	R-38	**8**	0.068	0.060	0.053	0.048	0.046	0.044	0.040	0.035
24 in. OC	Any	None	**9**	0.253	0.168	0.126	0.100	0.091	0.084	0.072	0.056
	2 x 6	R-11	**10**	0.095	0.080	0.069	0.061	0.057	0.054	0.049	0.041
		R-13	**11**	0.087	0.074	0.065	0.057	0.054	0.051	0.047	0.039
		R-19	**12**	0.077	0.067	0.059	0.053	0.050	0.048	0.044	0.037
	2 x 8	R-19	**13**	0.074	0.064	0.057	0.051	0.049	0.046	0.043	0.036
		R-22	**14**	0.07	0.061	0.055	0.049	0.047	0.045	0.041	0.035
	2 x 10	R-30	**15**	0.061	0.054	0.049	0.045	0.043	0.041	0.038	0.033
	2 x 12	R-38	**16**	0.054	0.049	0.044	0.041	0.039	0.038	0.035	0.031

Notes:

In order to use the U-factors listed in this section, exterior raised-floor insulation shall be installed between floor joists with a means of support that prevents the insulation from falling, sagging or deteriorating. Two approaches that accomplish this are:

1. Attaching insulation hangers 18 inches apart prior to rolling out the insulation. Hangers are heavy wires up to 48 inches long with pointed ends.
2. Attaching wire mesh to form a basket between joists to support the insulation. Mesh is nailed or stapled to the underside of the joists.

This table contains U-factors for metal-framed floors built over outdoor conditions. For the majority of cases, values will be selected from column A of this table. Column A applies for the common situation where batt insulation is supported between framing members. Builders or designers may increase thermal performance by adding a continuous insulation layer either above or below the framing members.

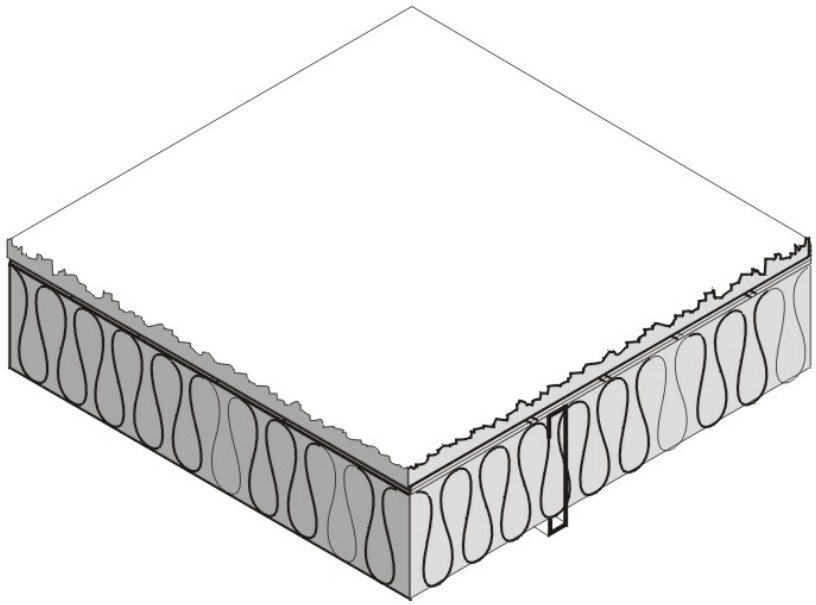

Figure 4.4.5 – Metal Framed Floors without a Crawl Space

When this table is used manually, the R-value of continuous insulation shall be equal to or greater than the R-value published in the continuous insulation columns. No interpolation is permitted when data from the table is used manually. CEC approved compliance software, however, may determine the U-factor for any amount of continuous insulation and for unusual construction layers using Equation 4-1 and Equation 4-2.

Assumptions: Calculations are based on the ASHRAE Zone Method Calculation, 2009 ASHRAE Handbook of Fundamentals Handbook. These calculations assume an exterior air film of R-0.17, a continuous insulation layer (if any), the insulation / framing layer, 5/8 inch wood based sheathing (Custom), carpet and pad of R-2.08 (CP01), and an interior air film (heat flow down) of R-0.92. The internal default framing percentages are 10 percent for 16 inch on center and 7 percent for 24 inch on center. Steel Framing has a 1.5 inch flange and is 0.075 inch thick steel with no knockouts. U-factors calculated using EZ frame 2.0.

Table 4.4.6 – Standard U-factors for Concrete Raised Floors

R-value of Insulation		Rated R-value of Continuous Insulation		
		Continuous Insulation Underneath	**Continuous Insulation Above Deck[1]** with no Sleepers	**Continuous Insulation Above Deck[1]** with Sleepers
		A	**B**	**C**
R-0	**1**	0.269	0.234	0.229
R-2	**2**	0.183	0.159	0.157
R-4	**3**	0.138	0.121	0.120
R-6	**4**	0.111	0.097	0.097
R-8	**5**	0.092	0.081	0.081
R-10	**6**	0.079	0.070	0.070
R-12	**7**	0.069	0.061	0.061
R-15	**8**	0.058	0.052	0.052
R-20	**9**	0.045	0.041	0.041
R-25	**10**	0.037	0.034	0.034
R-30	**11**	0.031	0.029	0.029

Notes:

[1] Above deck case includes a 5/8 inch layer of plywood between the insulation and the carpet and pad.

This table may be used only if the HC of the proposed design floor is greater than or equal to 7.0 Btu/ft²-ºF.

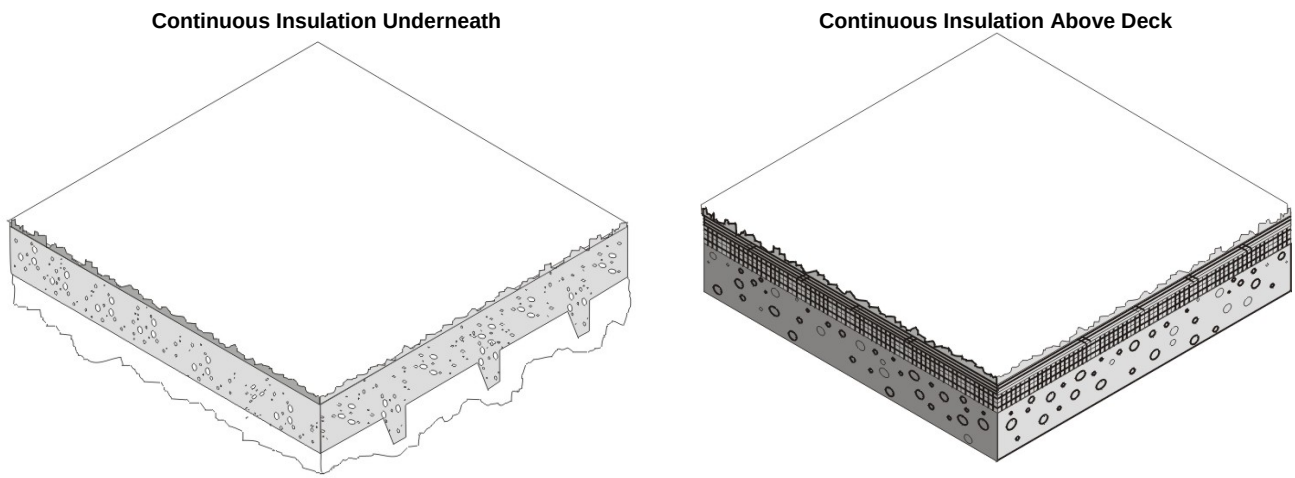

Figure 4.4.6 – Concrete Raised Floors

Assumptions: These calculations assume an exterior air film of R-0.17, a continuous insulation layer (if any), 4 inches of the lightweight concrete (CC14) over metal deck R-0, a continuous insulation layer (if any), 1.5 x 3.5 inch sleeper of R-0.99 per inch, R-0.80 air space between sleepers (2005 ASHRAE Handbook of Fundamentals, Chapter 25, Table 3), 5/8 inches of wood based sheathing (Custom) (if continuous insulation above deck), carpet and pad of R-2.08 (CP01), and an interior air film (heat flow down) of R-0.92. Sleepers have 10 percent framing factor. Below slab insulation assumes 6 inch wide beams 96 inches on center extending 8 inches below the slab.

Table 4.4.7 – F-Factors for Unheated Slab-on-Grade Floors

		Rated R-Value of Insulation												
Insulation Description		R-0	R-5	R-7.5	R-10	R-15	R-20	R-25	R-30	R-35	R-40	R-45	R-50	R-55
		A	**B**	**C**	**D**	**E**	**F**	**G**	**H**	**I**	**J**	**K**	**L**	**M**
None	**1**	0.73												
12 in. horizontal	**2**		0.72	0.71	0.71	0.71								
24 in. horizontal	**3**		0.70	0.70	0.70	0.69								
36 in. horizontal	**4**		0.68	0.67	0.66	0.66								
48 in. horizontal	**5**		0.67	0.65	0.64	0.63								
12 in. vertical	**6**		0.61	0.60	0.58	0.57	0.567	0.565	0.564					
24 in. vertical	**7**		0.58	0.56	0.54	0.52	0.510	0.505	0.502					
36 in. vertical	**8**		0.56	0.53	0.51	0.48	0.472	0.464	0.460					
48 in. vertical	**9**		0.54	0.51	0.48	0.45	0.434	0.424	0.419					
Fully insulated slab	**10**		0.46	0.41	0.36	0.30	0.261	0.233	0.213	0.198	0.186	0.176	0.168	0.161
Note: These values are used for slab edge conditions with and without carpet.														

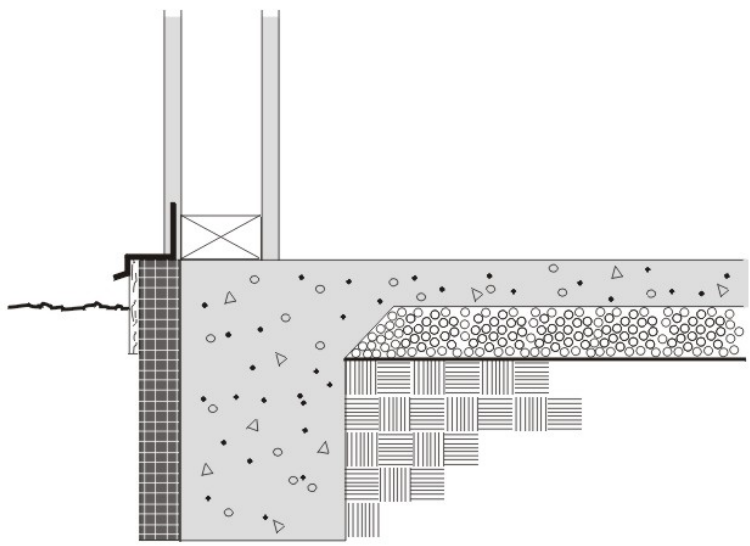

Figure 4.4.7 – Unheated Slab-on-Grade Floor

Horizontal insulation is continuous insulation that is applied directly to the underside of the slab and extends inward horizontally from the perimeter for the distance specified or continuous insulation that is applied downward from the top of the slab and then extends horizontally to the interior or the exterior from the perimeter for the distance specified. *Vertical insulation* is continuous insulation that is applied directly to the slab exterior, extending downward from the top of the slab for the distance specified. *Fully insulated slab* is continuous insulation that extends downward from the top to the slab and along the entire perimeter and completely covers the entire area under the slab.

Assumptions: Data of this table is taken from the ASHRAE/IESNA Standard 90.1-2004, Appendix A.

Table 4.4.8 – F-Factors for Heated Slab-on-Grade Floors

		Rated R-Value of Insulation												
		R-0	R-5	R-7.5	R-10	R-15	R-20	R-25	R-30	R-35	R-40	R-45	R-50	R-55
		A	B	C	D	E	F	G	H	I	J	K	L	M
None	**11**	1.35												
12 in. horizontal	**12**		1.31	1.31	1.30	1.30								
24 in. horizontal	**13**		1.28	1.27	1.26	1.25								
36 in. horizontal	**14**		1.24	1.21	1.20	1.18								
48 in. horizontal	**15**		1.20	1.17	1.13	1.11								
12 in. vertical	**16**		1.06	1.02	1.00	0.98	0.968	0.964	0.961					
24 in. vertical	**17**		0.99	0.95	0.90	0.86	0.843	0.832	0.827					
36 in. vertical	**18**		0.95	0.89	0.84	0.79	0.762	0.747	0.740					
48 in. vertical	**19**		0.91	0.85	0.78	0.72	0.688	0.671	0.659					
Fully insulated slab	**20**		0.74	0.64	0.55	0.44	0.373	0.326	0.296	0.273	0.255	0.239	0.227	0.217
Note: These values are used for slab edge conditions with and without carpet.														

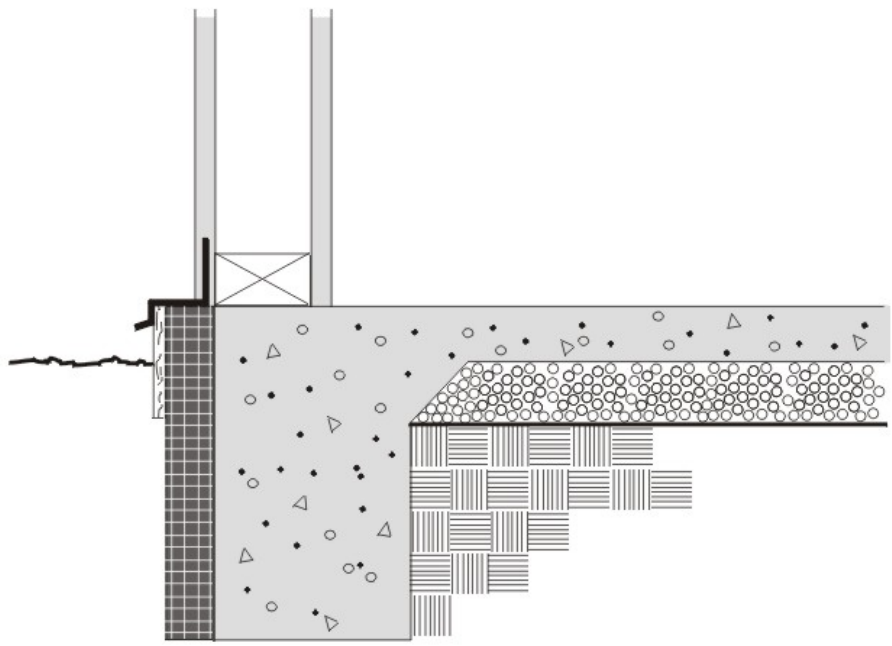

Figure 4.4.8 – Heated Slab-on-Grade Floor

Horizontal insulation is continuous insulation that is applied directly to the underside of the slab and extends inward horizontally from the perimeter for the distance specified or continuous insulation that is applied downward from the top of the slab and then extending horizontally to the interior or the exterior from the perimeter for the distance specified. *Vertical insulation* is continuous insulation that is applied directly to the slab exterior, extending downward from the top of the slab for the distance specified. *Fully insulated slab* is continuous insulation that extends downward from the top to the slab and along the entire perimeter and completely covers the entire area under the slab.

Assumptions: Data of this table is taken from the ASHRAE/IESNA Standard 90.1-2004, Appendix A.

JA4.5 Miscellaneous Construction

Table 4.5.1 – Doors

Description		U-factor (Btu/ºF-ft²)
		A
Uninsulated single-layer metal *swinging doors* or *non-swinging doors*, including single-layer uninsulated access hatches and uninsulated smoke vents:	**1**	1.45
Uninsulated double-layer metal *swinging doors* or *non-swinging doors*, including double-layer uninsulated access hatches and uninsulated smoke vents:	**2**	0.70
Insulated metal *swinging doors*, including fire-rated *doors*, insulated access hatches, and insulated smoke vents:	**3**	0.50
Wood *doors*, minimum nominal thickness of 1-3/4 in. (44 mm), including panel *doors* with minimum panel thickness of 1-1/8 in. (28 mm), and solid core flush *doors*, and hollow core flush *doors*:	**4**	0.50
Any other wood *door*:	**5**	0.60
Uninsulated single layer metal *roll up doors* including fire rated *door*	**6**	1.45
Insulated single layer metal *sectional doors,* minimum insulation nominal thickness of 1-3/8 inch; expanded polystyrene (R-4 per inch).	**7**	0.179
Source: ASHRAE 90.1-2007, Section A7.		

JA4.6

Table 4.6.1 – Physical Properties of Materials

Code	Description	R-value	Thickness	Conductivity	Density	Specific Heat
AR02	Asphalt Shingle & Siding	0.44			70.0	0.35
BP01	Building Paper, Permeable Felt	0.06				
PW03	Plywood 1/2 in.	0.63	0.0417	0.0667	34.0	0.29
GP01	Gypsum Board 1/2 in.	0.45	0.0417	0.0926	50.0	0.26
BR01	Built-up Roofing 3/8 in.	0.33	0.0313	0.0939	70.0	0.35
PW05	Plywood 3/4 in.	0.94	0.0625	0.0667	34.0	0.29
PW04	Plywood 5/8 in.	0.78	0.0521	0.0667	34.0	0.29
CP01	Carpet with Fibrous Pad	2.08				0.34
PB01	Particle Board Low Density 3/4 in.	1.39	0.0625	0.0450	75.0	0.31
SC01	Stucco 1 in.	0.20	0.0833	0.4167	116.0	0.20
WD05	Wood, Soft 4 in.	5.00	0.3333	0.0667	32.0	0.33
WD11	Wood, Hard 3/4 in.	0.68	0.0625	0.0916	45.0	0.30
-CC03	Heavy Wt. Dried Aggregate 4 in.	0.44	0.3333	0.7576	140.0	0.20
CC14	Heavy Wt. Undried Aggregate 4 in.	0.32	0.3333	1.0417	140.0	0.20
AC02	1/2 in. Acoustic Tile	1.26	0.0417	0.0330	18.0	0.32
AL33	Air Layer 4 in. or more, Horizontal Roof	0.92	1.0000	0.4167	120.0	0.20
CP01	Carpet with Fibrous Pad	2.08				0.34
Custom	Concrete	0.11			144.0	0.20
Custom	Light Weight CMU	0.35			105.0	0.20
Custom	Medium Weight CMU	0.35			115.0	0.20
Custom	Normal Weight CMU	0.35			125.0	0.20
Custom	Earth (Soil)	3.00	1.5000	0.5000	85.0	0.20
Custom	Logs 6 in.	7.50	0.5000	0.0667	32.0	0.33
Custom	Logs 8 in.	10.00	0.6667	0.0667	32.0	0.33
Custom	Logs 10 in.	12.49	0.8333	0.0667	32.0	0.33
Custom	Logs 12 in.	14.99	1.0000	0.0667	32.0	0.33
Custom	Logs 14 in.	17.49	1.1667	0.0667	32.0	0.33
Custom	Logs 16 in.	19.99	1.3333	0.0667	32.0	0.33
Custom	Earth 12 in.	2.00	1.0000	0.5000	85.0	0.20
Custom	Vented crawlspace	6.00	NA	NA	NA	NA
Custom	7/8" layer of stucco of R-0.18	0.18	0.0729	0.4167	116.0	0.20
Custom	Straw bale	30.00				
Custom	Acoustic tile + Metal	0.50	0.0417	0.0330	18.0	0.32
Custom	OSB 7/16 in.	0.44	0.4375	0.0667	34.0	0.29

Table 4.6.2 – Rules for Calculating Mass Thermal Properties From Published Values

Property	Units	Rule for Calculation
Heat Capacity (HC)	Btu/ºF-ft²	From Table 4.3.5, Table 4.3.6, or Table 4.3.7
U-factor	Btu/h-ºF-ft²	From Table 4.3.5, Table 4.3.6, or Table 4.14
C-factor	Btu/h-ºF-ft²	From Table 4.3.5, Table 4.3.6, or Table 4.3.7
Thickness (T)	Ft	From Table 4.3.5, Table 4.3.6, or Table 4.3.7
Specific Heat (SH)	Btu/ºF-lb	Assume that the specific heat of all concrete and masonry materials is 0.20 Btu/ºF-lb and that the specific heat of wood or straw (see Table 4.3.11 and Table 4.3.12) is 0.39 Btu/ºF-lb.
Weight (W)	lb/ft²	Divide the HC by the assumed specific heat. Wall weight is used with the low-rise residential standards to define a high mass wall.
Density (D)	lb/ft³	Multiply the weight (as calculated above) by the thickness (T)
Conductivity (C)	Btu/h-ºF-ft	Divide the published C-factor by the thickness (T). When only a U-factor is published, calculate the C-factor by assuming an exterior air film of 0.17 and an interior air film of 0.68.

Joint Appendix JA5

Appendix JA5 - Technical Specifications For Occupant Controlled Smart Thermostats

Table of Contents

Appendix JA5 - Technical Specifications For Occupant Controlled Smart Thermostats 1
JA5.1 Introduction 2
JA5.2 Required Functional Resources 2
JA5.2.1 Setback Capabilities. 2
JA5.2.2 Communication Capabilities. 2
JA5.2.3 OCST Messages and Attributes 3
JA5.2.4 Event Response 3
JA5.2.5 Other Required Capabilities 4
JA5.3 Functional Descriptions 4
JA5.3.1 Communications Interface 4
JA5.3.2 Expansion/Communication Port 4
JA5.3.3 Onboard Communications Devices 5
JA5.3.4 User Display and Interface 5
JA5.3.5 Required Functional Behavior 5
JA5.3.6 Restoring Temperature Offsets and Setpoints 6
JA5.3.7 Security 7
JA5.4 The HVAC System Interface 7
JA5.5 Terminology 7

JA5.1 Introduction

The Occupant Controlled Smart Thermostat (OCST)[2] shall be self-certified by the manufacturer to the Energy Commission to meet the requirements described in this section. This document provides a high level technical specification for an OCST. All OCSTs shall comply with the specifications set forth in this document or a specification approved by the Executive Director. This specification focuses on three interfaces that the Energy Commission has determined shall be supported by all OCSTs:

(a) Communications Interface
(b) User Display and Interface
(c) HVAC System Interface

Sections within this document address each interface in terms of its hardware and software characteristics. This specification is intended to compatible with NEMA Standards Publication DC 3-2008 – "Residential Controls – Electrical Wall-Mounted Thermostats"[3] unless otherwise specified.

The Communications Interface is defined as a set of logical services that may be performed over a physical network interface connected to either an expansion port or an internal communications device. The communications interface is designed to permit a variety of intended uses for OCSTs including remote energy management services, to the extent that occupants voluntarily enable such services. To the extent possible, this document strives to be compatible with related efforts underway (e.g. National Institute of Standards and Technology (NIST) Smart Grid Interoperability Panel (SGIP), Open Smart Grid, etc.).

The following elements are addressed in this document:

(a) Support for the basic HVAC terminal interface specification
(b) Support for an internal communications device or for an expansion port that will allow for the installation of a removable module to enable communications with the thermostat.

The following sections describe these and other elements of the specification in more detail.

JA5.2 Required Functional Resources

JA5.2.1 Setback Capabilities

All OCSTs shall meet the requirements of Section 110.2(c). Thermostats for heat pumps shall also meet the requirements of Section 110.2(b).

JA5.2.2 Communication Capabilities

OCSTs shall include communication capabilities enabled through either
(a) At least one expansion port which will allow for the installation of a removable module containing a radio or physical connection port to enable communication; or
(b) Onboard communication device(s)

2 A networked system of devices which is capable of receiving and responding to Demand Response Signals and provides equivalent functionality as required by Reference Joint Appendix JA5, shall be considered equivalent to an OCST.

3 NEMA DC 3-2008 - http://www.nema.org/Standards/Pages/Residential-Controls-Electrical-Wall-Mounted-Room-Thermostats.aspx

JA5.2.3 OCST Messages and Attributes

The OCST communications capabilities shall enable Demand Responsive Control through receipt of Demand Response Signals or price signals. After OCST communication is enabled and the occupant has enrolled in a Demand Response program or subscribed to receive demand response or pricing related messages or information updates, the OCST shall be capable of both receiving and responding to Demand Response Signals. The OCST with communications enabled recognizes two basic system event modes: price response and Demand Response Periods. Both basic system event modes can be overridden by the occupant.

JA5.2.3.1 Price Signals

Price signals allow the utility or another entity selected by the occupant to send a signal or message to the occupant's OCST to provide pricing information to the occupant and initiate Demand Responsive Control for the Demand Response Period utilizing a Demand Response Signal.

Price signal attributes and requirements shall be specified within the messaging protocol utilized by the utility or other entity selected by the occupant.

JA5.2.3.2 Demand Response Periods

This event class allows the utility or another entity selected by the occupant to initiate Demand Responsive Control for the Demand Response Period utilizing a Demand Response Signal.

Demand Response Signal attributes and requirements shall be specified within the messaging protocol utilized by the utility or other entity selected by the occupant.

If a price signal or Demand Response Signal is received and validated, but conflicts with a prior message, the newer message shall supersede the previous message and any continuing action for the prior message is automatically terminated by the OCST (unless the subsequent message attempts to initiate an action that has been disapproved by the occupant).

JA5.2.4 Event Response

Event response, unless overridden by the occupant or modified by an energy management control system or service, may be triggered by price signals or Demand Response Signals. The OCST shall provide one set of event responses for price signals and one set of event responses for Demand Response Signals. The responses may be common for both types of events.

OCSTs, with communications enabled, shall be capable of receiving and automatically responding to the Demand Response Signals as follows:

(a) A Demand Response Signal shall trigger the OCST to adjust the thermostat setpoint by either the default number of degrees or the number of degrees established by the occupant.
(b) When a price signal indicates a price in excess of a price threshold established by the occupant, the OCST shall adjust the thermostat setpoint by either the default number of degrees or the number of degrees established by the occupant.
(c) In response to price signals or Demand Response signals, the OCST shall default to an event response that initiates setpoint offsets of +4°F for cooling and -4°F for heating relative to the current setpoint.
(d) The OCST shall have the capability to allow occupants or their representative to modify the default event response with occupant defined event responses for cooling and heating relative to the current setpoint in response to price signals or Demand Response Signals.
(e) Override Function: Occupants shall be able to change the event responses and thermostat settings or setpoints at any time, including during price events or Demand Response Periods.
(f) The Demand Response Signal shall start the Demand Response Period either immediately or at a specific start time as specified in the event signal and continue for the Demand Response Period specified in the Demand Response Signal or until the occupant overrides the event setpoint.

(g) The thermostat's price response shall start either immediately or at a specific start time as specified in the pricing signal and continue for the duration specified in the pricing signal or until the occupant overrides the event setpoint.
(h) The OCST shall have the capability to allow occupants to define setpoints for cooling and heating in response to price signals or Demand Response signals as an alternative to the default event response.
(i) At the end of a price event or Demand Response Period, the thermostat setpoint shall be set to the setpoint that is programmed for the point in time that the event ends or to the manually established setpoint that existed just prior to the Demand Response Period.

JA5.2.5 Other Required Capabilities

Unless the messaging protocol contains randomization or restoration delay logic, OCSTs shall provide a mechanism, such as a randomized delay, to prevent all of the OCSTs within a demand-response area from ending the demand-response event at the same time. This mechanism can be implemented within the control logic of the OCST, within the control logic of the demand-response signaling system, or within the control logic of the communication network between the OCST and the demand-response signaling system. The display of the thermostat shall accurately indicate the end of the event, accounting for any delays or advances provided by this mechanism. The specific maximum restoration delay for restoration after a Demand Response Period shall be 30 minutes or alternatively can be defined within the Demand Response Signal for that event.

JA5.3 Functional Descriptions

JA5.3.1 Communications Interface

The communications interface has two aspects – the physical interface and the logical interface.

The physical communications interface includes a one- or two-way communications interface as selected and specified by the occupant's utility, information update service or Demand Response service provider and enabled by either onboard communications devices or a communications module in the case of an expansion/communication port. There is no mandated specification for the physical communications protocol. However, the communications capabilities shall enable Demand Responsive Control through receipt of Demand Response Signals based on communications standards (including but not limited to ZigBee (IEEE 802.15.4) or WiFi (IEEE 802.11)).

The logical interface consists of the information model used to represent messages sent to the OCST. There is no mandated specification for the logical interface , but direction is provided as "standards based messaging protocols (including but not limited to Smart Energy Profile (SEP), OpenADR or others defined in the Smart Grid Interoperability Panel (SGIP) Catalog of Standards (CoS)[4])" or as defined by the occupant's information update service or Demand Response service provider.

JA5.3.2 Expansion/Communication Port

This port is available to be used by a module supporting one-way or two-way communications supporting standards based communication protocols as described in Section 5.3.1. The module shall also enable standards based messaging protocols (including but not limited to Smart Energy Profile (SEP), OpenADR or others defined in the Smart Grid Interoperability Panel (SGIP) Catalog of Standards (CoS)) or as defined by the occupant's information update service or Demand Response service provider.

When the Expansion/Communication port is unpopulated, the thermostat shall function as a programmable setback thermostat and shall meet the requirements of Sections 110.2(b) and (c).

The removable module may also provide a means of memory storage, logging, and firmware upgrade. The requirements associated with the expansion interface are:

(a) The expansion/communication port shall be readily accessible to the occupant for installing and removing the communication module.

4 http://collaborate.nist.gov/twiki-sggrid/bin/view/SmartGrid/SGIPCoSStandardsInformationLibrary

(b) Installation of the module shall upgrade the programmable setback thermostat to an OCST.

(c) After communications are enabled[5] and the occupant has enrolled in a Demand Response program or subscribed to receive demand response related messages or information updates, the OCST shall be capable of both receiving and responding to Demand Response Signals.

The OCST's expansion port interface has no mandated configuration or design specification.

JA5.3.3 Onboard Communications Devices

When onboard communication devices are present, the thermostat or HVAC control system shall be equipped with the capability to enable or disable the onboard communication device(s). The switch or interface to enable or disable onboard communications shall be readily accessible to the occupant.

When onboard communications are disabled, the thermostat shall function as a programmable setback thermostat and shall meet the requirements of Section 110.2(c). Thermostats for heat pumps shall also meet the requirements of Section 110.2(b).

JA5.3.4 User Display and Interface

The OCST shall have the capability to display information to the user. The following information shall be readily available whenever the OCST display is active:

(a) communications system connection status,

(b) an indication that a Demand Response Period or pricing event is in progress,

(c) other maintenance-related information,

(d) the currently sensed temperature,

(e) the current setpoint.

JA5.3.5 Required Functional Behavior

(a) Clock Operation. The clock mechanism enables the OCST to execute temperature setpoints scheduled by the occupant. It also supports other timing functions such as start-time, end-time and duration for coordination of Demand Response Periods and price signal response.

The OCST shall provide a pair of programmable thermostat setpoint time and temperature parameters for at least four operating periods that collectively govern thermostat operation during the 24-hour day.

Accuracy to a precision of one minute is acceptable for this operating environment and the applications being considered.

The clock in an OCST may be set by the occupant, using the OCST's human-machine interface. Alternatively, an OCST with communications enabled may be set or synchronized by the occupant's selected service provider.

(b) Normal Operation. Normal operation of an OCST is defined to be the OCST's prevailing mode of operation as determined by the occupant's prior settings and use of features[6] provided by the OCST manufacturer's design. Aspects of normal operation of an OCST may be modified or interrupted in response to occupant subscribed price signals or when Demand Response Periods are in progress, but only to the extent specified by occupants or their representatives.

5 The removable module, or gateway for a networked system of devices, for enabling communications can be selected and installed at the time of enrollment in a Demand Response program or subscription to receive demand response related messages or information updates.

6 The specific design of such features (e.g. HOLD, OVERRIDE) is defined by individual manufacturers and not by this document.

Unless an occupant has elected to connect the OCST to an energy management control system or service that provides for alternate strategies, the OCST shall provide a mode of operation whereby it controls temperature by following the scheduled temperature setpoints.

Occupants shall always have the ability to change OCST settings or use other features of an OCST during an event. Those changes may alter what is considered to be the prevailing mode of operation when a Demand Response Period is terminated and the OCST returns to normal operation.

(c) Demand Responsive Control. Upon receiving a price signal or a Demand Response Signal, OCSTs shall be capable of automatic event response by adjusting the currently applicable temperature setpoint by the number of degrees indicated in the temperature offset (heating or cooling, as appropriate).

Override: OCSTs shall allow an occupant or their representative to alter or eliminate the default response to price signals or Demand Response Signals, and to override any individual price response or Demand Responsive Control and allow the occupant to choose any temperature setpoint at any time including during a price event or a Demand Response Period.

When the price signal changes to a non-response level or the Demand Response Period is concluded, OCSTs shall return to normal operation. The thermostat setpoint shall be set to the setpoint that is programmed for the point in time that the event ends or to the manually established setpoint that existed just prior to the Demand Response Period.

The OCST shall also be equipped with the capability to allow occupants to define setpoints for cooling and heating in response to price signals or Demand Response Signals as an alternative to the default event response. The default setpoint definitions unless redefined by the occupant shall be as follows:

1. The default price response or Demand Response Period setpoint in the cooling mode for OCSTs shall be 82°F. The OCST shall allow the occupant to change the default event setpoint to any other value.
2. The default price response or Demand Response Period setpoint in the heating mode for OCSTs shall be 60°F. The OCST shall allow the occupant to change the default event setpoint to any other value.
3. The OCST shall ignore price response or Demand Response Period setpoints that are lower (in cooling mode) or higher (in heating mode) than the programmed or occupant selected prevailing setpoint temperature upon initiation of the price event or Demand Response Period.
4. By default, thermostats shall not be remotely set above 90°F or below 50°F. Occupants shall have the ability to redefine these limits. This measure protects occupant premises from extreme temperatures that might otherwise be imposed by event responses, should the occupant already have a very high or low temperature setpoint in effect.

The occupant may still override or change the setpoint during all price events and Demand Response Periods. Price signal response and Demand Responsive Control only modify the operating range of the thermostat. They do not otherwise affect the operation and use of features provided by the manufacturer's design.

JA5.3.6 Restoring Factory Installed Default Settings

The OCST shall include the capability to allow the occupant to restore the factory installed default settings.

JA5.3.7 Security

Demand Response Signal security attributes and requirements shall be specified within both the communications standard and the messaging protocol utilized by the utility or other entity selected by the occupant. The OCST communications system shall consider relevant security issues and potential cyber-attacks[7].

JA5.4 The HVAC System Interface

HVAC wiring terminal designations shall be clearly labeled. OCSTs shall use labels that comply with Table 5-1 in NEMA DC 3-2008. It is noted that OCSTs using wired or wireless digital data interfaces do not directly follow NEMA DC 3-2008.

JA5.5 Terminology

Current Setpoint	The setpoint that existed just prior to the price event or Demand Response Period.
Demand Response	See Joint Appendix JA1- Glossary.
Demand Response Period	See Joint Appendix JA1 – Glossary.
Demand Response Signal	See Joint Appendix JA1 – Glossary.
Demand Responsive Control	See Joint Appendix JA1 – Glossary.
Energy Management Control System	See Joint Appendix JA1 – Glossary.
Override	Refers to an occupant adjusting thermostat settings to either not respond to a Demand Response Signal or adjusting the setpoint compared to the OCST's programmed response to a price signal or Demand Response Signal.
Price Signal	is a signal sent by the local utility, Independent System Operator (ISO), or designated curtailment service provider, information update service or aggregator, to an enrolled or subscribed customer, indicating a price or other economic indicator that can trigger OCST Demand Responsive Control.
Price Event	Refers to a change in pricing sent to the OCST from the utility or the occupant's selected demand response provider.

7 A thorough discussion of security issues may be found at: http://collaborate.nist.gov/twiki-sggrid/bin/view/SmartGrid/CyberSecurityCTG.

Joint Appendix JA6

Appendix JA6 – HVAC System Fault Detection and Diagnostic Technology

Table of Contents

Appendix JA6 – HVAC System Fault Detection and Diagnostic Technology 1
JA6.1 Charge Indicator Display (CID) 2
JA6.1.1 Purpose and Scope 2
JA6.1.2 CID Product Approval 2
JA6.1.3 CID Installation 2
JA6.1.4 CID Product Documentation 2
JA6.1.5 Optional Fault Detection Capabilities 2
JA6.1.6 Requirements for a Charge Indicator Display 2
JA6.2 Saturation Pressure Measurement Sensors 7
JA6.2.1 Purpose and Scope 7
JA6.2.2 SPMS Device Approval 7
JA6.2.3 Standard for Saturation Pressure Measurement Sensors 7

JA6.1 Charge Indicator Display (CID)

JA6.1.1 Purpose and Scope

Joint Appendix JA6.1 defines required elements for charge indicator display technologies that utilize instrumentation and computer software functionality to monitor and determine the operating performance of vapor compression air conditioning and heat pump systems, to provide visual indication to the system owner/operator if the system's refrigerant charge or metering device performance does not conform to approved target parameters for minimally efficient operation.

JA6.1.6 specifies the required instrumentation, instrumentation accuracy, parameters measured, required calculations, allowable deviations from target values for system operating parameters, and the requirements for system fault indication for a charge indicator display technology that conforms to the methods for verifying refrigerant charge and metering device performance described in Reference Residential Appendix RA3.2.2.

Charge indicator display technologies other than what is described in Section JA6.1are possible, and when vapor compression air conditioner and heat pump system refrigerant charge, metering device and airflow operating performance can be reliably determined by methods and instrumentation other than those specifically defined in section JA6.1 such alternative charge indicator display technologies may be allowed for Charge Indicator Display compliance credit if the manufacturer of the product requests approval from the Energy Commission. The Commission may grant such approval after reviewing submittals from the applicant. Charge indicator display technologies that are approved by the Commission shall be specified in documentation that will be published as an addendum to this appendix.

The applicant shall provide information that specifies the required instrumentation, the instrumentation accuracy, the parameters measured, the required calculations, the allowable deviations from target values for system operating parameters, and the requirements for system fault indication.

JA6.1.2 CID Product Approval

Charge indicator display technology manufacturers shall certify to the Energy Commission that the charge indicator display technology meets the requirements of Reference Joint Appendix JA6.1.

JA6.1.3 CID Installation

Charge indicator display devices shall be factory installed by the space-conditioning system manufacturer, or field installed according to the space-conditioning system manufacturer's requirements and the CID manufacturer's specifications.

JA6.1.4 CID Product Documentation

Manufacturers of CID technologies shall, upon request, provide comprehensive engineering specification documentation, installation and technical field service documentation, and homeowner user instructions documentation to designers, installers, service personnel and homeowners who utilize the technology.

JA6.1.5 Optional Fault Detection Capabilities

The CID may also be used to signal other system operation faults as long as these additional functions do not detract from the proper function of the refrigerant charge, metering device, or airflow operation indications.

JA6.1.6 Requirements for a Charge Indicator Display

This section specifies the required instrumentation, the instrumentation accuracy, the parameters measured, the required calculations, the allowable deviations from target values for system operating parameters, and the requirements for system fault indication for a charge indicator display technology.

JA6.1.6.1 Instrumentation Specifications

Instrumentation for the procedures described in JA6.1.6 shall conform to the following specifications:

JA6.1.6.1.1 Temperature Sensors

The temperature sensors shall have an accuracy of plus or minus1.8°F.

JA6.1.6.1.2 Refrigerant Pressure Sensors

Refrigerant pressure sensors, shall have an accuracy of plus or minus 3 percent of full scale.

JA6.1.6.1.3 Parameters Measured

The following parameters shall be measured:

(a) Suction line temperature ($T_{suction,}$)

(b) Liquid line temperature (T_{liquid})

(c) Evaporator saturation temperature or low side refrigerant pressure ($T_{evaporator, sat}$)

(d) Condenser saturation temperature or high side refrigerant pressure ($T_{condensor, sat}$)

(e) Return air wet bulb temperature or humidity ($T_{return, wb}$)

(f) Return air dry bulb temperature ($T_{return, db}$)

(g) Condenser air entering dry bulb temperature ($T_{condenser, db}$)

(h) Supply air dry bulb temperature ($T_{supply, db}$)

JA6.1.6.2 Refrigerant Charge, Metering Device, and Airflow Calculations

Refrigerant charge, metering device and airflow calculations for determining superheat, subcooling, and temperature split values shall conform to the specifications of this section utilizing the measured parameters data from instrumentation as specified in Section JA6.1.6.1.

JA6.1.6.2.1 Fixed Metering Device Calculations

The fixed metering device calculations are used only for systems equipped with fixed metering devices. These include capillary tubes and piston-type metering devices.

(a) Calculate Actual Superheat as the suction line temperature minus the evaporator saturation temperature. Actual Superheat = $T_{suction,} – T_{evaporator, sat}$.

(b) Determine the Target Superheat using Reference Residential Appendix RA3 Table RA3.2-2, the return air wet-bulb temperature ($T_{return, wb}$) and the condenser air entering dry-bulb temperature ($T_{condenser, db}$). If a dash mark is read from Reference Residential Appendix RA3 Table RA3.2-2, the target superheat is less than 5°F.

(c) Calculate the difference between Actual Superheat and Target Superheat (Actual Superheat - Target Superheat)

JA6.1.6.2.2 Variable Metering Device Calculations

The variable metering device calculations are used only for systems equipped with variable metering devices. These include Thermostatic Expansion Valves (TXV) and Electronic Expansion Valves (EXV).

(a) Calculate Actual Subcooling as the condenser saturation temperature minus the liquid line temperature. Actual Subcooling = $T_{condenser, sat} - T_{liquid}$.

(b) Determine the Target Subcooling specified by the manufacturer.

(c) Calculate the difference between actual subcooling and target subcooling (Actual Subcooling - Target Subcooling.

(d) Calculate Actual Superheat as the suction line temperature minus the evaporator saturation temperature. Actual Superheat = $T_{suction} – T_{evaporator, sat}$.

(e) If possible, determine the Superheat Range specified by the manufacturer.

JA6.1.6.2.3 Minimum Airflow Calculations

The minimum airflow calculations are designed to determine whether the rate of airflow across the evaporator coil is above the minimum airflow rate requirement for a valid refrigerant charge test result.

(a) Calculate the Actual Temperature Split as the return air dry-bulb temperature minus the supply air dry-bulb temperature. Actual Temperature Split = $T_{return, db}$ - $T_{supply, db}$

(b) Determine the Target Temperature Split from Table JA6.1-1 using the return air wet-bulb temperature ($T_{return, wb}$) and return air dry-bulb temperature ($T_{return, db}$).

(c) Calculate the difference between target and actual temperature split (Actual Temperature Split - Target Temperature Split).

JA6.1.6.3 System Fault Indication

Data from instrumentation specified in Section JA6.1.6.1 and calculations specified in Section JA6.1.6.2 shall be processed and interpreted continuously or at sufficiently frequent time step intervals, during normal system operation, to insure that system operating conditions that meet the system fault criteria of this section will be detected, and indicated by the charge indicator display. Data from instrumentation specified in Section JA6.1.6.1 and calculations specified in Section JA6.1.6.2 shall be processed and interpreted in a manner that prevents indication of system faults when system fault criteria are triggered by temporary or transitory operating conditions that are not true indicators of problems with refrigerant charge, metering device, or airflow performance.

The charge indicator display shall:

(a) be clearly visible to occupants of the home during normal operation.

(b) be located on or within one foot of (one of) the thermostat(s) controlling the air conditioner.

(c) display an indication of a system fault requiring service or repair when system normal operation fails to meet the required operating performance criteria specified in this section. These system fault indications shall be displayed for a period of at least 7 days after a system fault is detected unless the charge indicator display is reset by the installing or servicing technician.

1. Refrigerant charge verification criterion for fixed metering device systems.

   If the air conditioner has a fixed metering device, runs for 15 minutes, has a Target Superheat value determined by Reference Residential Appendix RA3 Table RA3.2-2 that is greater than or equal to 5°F, the condenser air entering temperature is greater than or equal to 65°F, and the minimum airflow requirement from item d below is satisfied, then the conditions for a valid refrigerant charge test are satisfied.

   If the conditions for a valid refrigerant charge test are satisfied, and the air conditioner has an Actual Superheat value that deviates more than plus or minus 10°F from the Target Superheat value determined by Reference Residential Appendix RA3 Table RA3.2-2, then the system fails the refrigerant charge test, and a system fault shall be reported.

2. Refrigerant charge verification criterion for variable metering device systems.

   If the air conditioner has a TXV or EXV, runs for 15 minutes, the condenser air entering temperature is greater than or equal to 65°F, and the minimum airflow requirement from item d below is satisfied, then the conditions for a valid refrigerant charge test are satisfied.

If the conditions for a valid refrigerant charge test are satisfied, and the air conditioner has an Actual Subcooling value that deviates more than plus or minus 6°F from the Target Subcooling value listed by the manufacturer, then the system fails the refrigerant charge test, and a system fault shall be reported.

3. Variable metering device function verification criterion.

   If the air conditioner has a TXV or EXV, runs for 15 minutes, the condenser air entering temperature is greater than or equal to 65°F, and the minimum airflow requirement from item d below is satisfied, then the conditions for a valid metering device test are satisfied.

   If the conditions for a valid metering device test are satisfied, and the air conditioner has an Actual Superheat value outside the range specified by the manufacturer (or outside the range 2°F to 28°F if there is no manufacturer's specification), then the system fails the metering device test, and a system fault shall be reported.

4. Minimum airflow verification criterion.

   If the air conditioner runs for 15 minutes, and the condenser air entering temperature is greater than or equal to 65°F, then the conditions for a valid minimum airflow test are satisfied.

   If the conditions for a valid minimum airflow test are satisfied, and the air conditioner has an Actual Temperature Split value that deviates more than plus 5°F from the Target Temperature Split value determined by Table JA6.1-1, then the system fails the minimum airflow test, and a system fault shall be reported.

JA6.1.6.4 Optional Functionality

The charge indicator display devices may be set to tighter specifications than those specified in Section JA6.1.6.3. The charge indicator display may also be used to signal other system faults as long as these additional diagnostic functions do not detract from the accuracy of the measurement and reporting of system faults as specified in Section JA6.1.6.3.

JA6.1.6.4.1 Self Diagnostic Reporting

When equipped with self diagnostic reporting functionality, the CID shall check for communication with every sensor and provide an indication when there are any sensor failures.

JA6.1.6.4.2 Data Access

In order to provide for verification of sensor data and CID system functionality, data access shall be provided. The CID manufacturer shall specify the data access method(s), and the minimum data reporting capability including requirements for any data history reporting.

Table JA6.1-1 Target Temperature Split (Return Dry-Bulb – Supply Dry-Bulb)

Return Air Dry–Bulb (ºF) (T return, db)	Return Air Wet-Bulb (ºF) (T return, wb)																										
	50	51	52	53	54	55	56	57	58	59	60	61	62	63	64	65	66	67	68	69	70	71	72	73	74	75	76
70	20.9	20.7	20.6	20.4	20.1	19.9	19.5	19.1	18.7	18.2	17.7	17.2	16.5	15.9	15.2	14.4	13.7	12.8									
71	21.4	21.3	21.1	20.9	20.7	20.4	20.1	19.7	19.3	18.8	18.3	17.7	17.1	16.4	15.7	15.0	14.2	13.4	12.5								
72	21.9	21.8	21.7	21.5	21.2	20.9	20.6	20.2	19.8	19.3	18.8	18.2	17.6	17.0	16.3	15.5	14.7	13.9	13.0	12.1							
73	22.5	22.4	22.2	22.0	21.8	21.5	21.2	20.8	20.3	19.9	19.4	18.8	18.2	17.5	16.8	16.1	15.3	14.4	13.6	12.6	11.7						
74	23.0	22.9	22.8	22.6	22.3	22.0	21.7	21.3	20.9	20.4	19.9	19.3	18.7	18.1	17.4	16.6	15.8	15.0	14.1	13.2	12.2	11.2					
75	23.6	23.5	23.3	23.1	22.9	22.6	22.2	21.9	21.4	21.0	20.4	19.9	19.3	18.6	17.9	17.2	16.4	15.5	14.7	13.7	12.7	11.7	10.7				
76	24.1	24.0	23.9	23.7	23.4	23.1	22.8	22.4	22.0	21.5	21.0	20.4	19.8	19.2	18.5	17.7	16.9	16.1	15.2	14.3	13.3	12.3	11.2	10.1			
77	-	24.6	24.4	24.2	24.0	23.7	23.3	22.9	22.5	22.0	21.5	21.0	20.4	19.7	19.0	18.3	17.5	16.6	15.7	14.8	13.8	12.8	11.7	10.6	9.5		
78	-	-	-	24.7	24.5	24.2	23.9	23.5	23.1	22.6	22.1	21.5	20.9	20.2	19.5	18.8	18.0	17.2	16.3	15.4	14.4	13.4	12.3	11.2	10.0	8.8	
79	-	-	-	-	-	24.8	24.4	24.0	23.6	23.1	22.6	22.1	21.4	20.8	20.1	19.3	18.5	17.7	16.8	15.9	14.9	13.9	12.8	11.7	10.6	9.4	8.1
80	-	-	-	-	-	-	25.0	24.6	24.2	23.7	23.2	22.6	22.0	21.3	20.6	19.9	19.1	18.3	17.4	16.4	15.5	14.4	13.4	12.3	11.1	9.9	8.7
81	-	-	-	-	-	-	-	25.1	24.7	24.2	23.7	23.1	22.5	21.9	21.2	20.4	19.6	18.8	17.9	17.0	16.0	15.0	13.9	12.8	11.7	10.4	9.2
82	-	-	-	-	-	-	-	-	25.2	24.8	24.2	23.7	23.1	22.4	21.7	21.0	20.2	19.3	18.5	17.5	16.6	15.5	14.5	13.4	12.2	11.0	9.7
83	-	-	-	-	-	-	-	-	-	25.3	24.8	24.2	23.6	23.0	22.3	21.5	20.7	19.9	19.0	18.1	17.1	16.1	15.0	13.9	12.7	11.5	10.3
84	-	-	-	-	-	-	-	-	-	25.9	25.3	24.8	24.2	23.5	22.8	22.1	21.3	20.4	19.5	18.6	17.6	16.6	15.6	14.4	13.3	12.1	10.8

JA6.2 Saturation Pressure Measurement Sensors

JA6.2.1 Purpose and Scope

Appendix JA6.2 specifies the required instrumentation, and the instrumentation accuracy, for a saturation pressure measurement sensor (SPMS) device intended to provide a means for a HERS Rater to observe space conditioning system refrigerant pressure measurement data without attaching refrigerant gages to the refrigerant system service access ports.

The SPMS device manufacturer shall provide certification to the commission that the SPMS device conforms to the requirements of Reference Joint Appendix JA6.2.

JA6.2.2 SPMS Device Approval

SPMS devices, if approved by the Commission, shall be allowed for use for determining compliance with the refrigerant charge verification requirements in the Standards. The Commission may grant such approval after reviewing submittals from the applicant. SPMS devices that are approved by the Commission shall be listed as approved SPMS devices in directories published by Energy Commission.

Manufacturers of approved SPMS devices shall, upon request, provide comprehensive engineering specification documentation, installation and technical field service documentation, and user instructions documentation to installers and service personnel that utilize the procedure.

JA6.2.3 Standard for Saturation Pressure Measurement Sensors

SPMS devices shall measure and report the refrigerant system pressure for both the high pressure side and the low pressure side of the air conditioner or heat pump refrigerant system within the tolerances given in Section JA6.2.3.1.

JA6.2.3.1 Instrumentation Specifications

The pressure measurement instrumentation shall have accuracy equal to or better than the following:

(a) accuracy: ± 7.0 psi liquid line pressure

(b) accuracy: ± 3.5 psi suction pressure

JA6.2.3.2 Installation

SPMS devices shall be installed by the space-conditioning equipment manufacturer, or installed in the field according to any applicable space-conditioning equipment manufacturer requirements, within 12 inches of the refrigerant system service port.

(This page intentionally left blank.)

Joint Appendix JA7

Appendix JA7 – Data Registry Requirements

Table of Contents

Appendix JA7 – Data Registry Requirements 1
JA7.1 Purpose and Scope 3
JA7.2 Definitions 4
JA7.3 Introduction 8
JA7.4 Roles and Responsibilities, and Authorized Users 9
JA7.4.1 Registration Provider 9
JA7.4.2 Authorized Users 9
JA7.4.3 View-Only Authorized User 9
JA7.4.4 Documentation Author 10
JA7.4.5 Field Technician 10
JA7.4.6 Registration Signer (Responsible Person) 10
JA7.4.7 Enforcement Agency 10
JA7.5 Document Registration Requirements 12
JA7.5.1 Overview 12
JA7.5.2 Document Appending 12
JA7.5.3 Data Validation for Compliance Document Registration 13
JA7.5.4 Registration Numbering Conventions 14
JA7.5.5 Verification of Authenticity of Copies of Registered Documents 16
JA7.5.6 Project Document Configuration 16
JA7.5.7 Certificate of Compliance Requirements 18
JA7.5.8 Certificate of Installation Requirements 18
JA7.5.9 Certificate of Verification Requirements 19
JA7.5.10 Certificate of Acceptance Requirements 20
JA7.6 Electronic and Digital Signature Requirements 21
JA7.6.1 Introduction 21
JA7.6.2 Overall Description 21
JA7.6.3 Specific requirements 23
JA7.7 Data Exchange Requirements 28
JA7.7.1 Data Exchange Requirements for Document Registration 28

JA7.8 Data Registry Approval 30
JA7.8.1 Overview 30
JA7.8.2 Application Checklist 30
JA7.8.3 Types of Approval 31
JA7.8.4 Rescinding Approval (Deactivation) of Data Registries 32
JA7.8.5 Data Registry User Manual 33
JA7.9 Approval of Software Used for Data Input to Data Registries 34
JA7.9.1 Overview 34
JA7.9.2 Application Checklist 35
JA7.9.3 Types of Approval 35
JA7.9.4 Rescinding Approval (Deactivation) of Software 36
JA7.9.5 Software User Manual 38
JA7.10 Related Publications 38

JA7.1 Purpose and Scope

Joint Appendix JA7 specifies required functional and technical elements for Data Registries that provide services to authorized users and receive data to produce, register, retain, and distribute copies of compliance documents required for compliance with Title 24 Part 6. The functional and technical elements specified in this document include the following:

(a) Document registration is defined.

(b) Roles and responsibilities for users and administrators of data registries are defined.

(c) Requirements for registered documents are defined.

(d) Requirements for configuration of project documents in the Data Registry are defined.

(e) Requirements for electronic and digital signatures used on registered documents are defined.

(f) Requirements for data exchange between Data Registries and external software tools are defined.

(g) Requirements for transmittal of copies of documents to a document repository at time of registration are defined.

(h) Procedures for approval of Data Registries and software used for data input to data registries are defined.

A Data Registry Requirements Manual is expected to be approved by the Energy Commission to provide additional detailed guidance regarding functional and technical aspects of the requirements in Reference Joint Appendix JA7.

JA7.2 Definitions

For the purposes of the specifications in Reference Joint Appendix JA7, the following definitions shall apply:

Asymmetric Key Encryption is also known as public key encryption. This type of encryption uses a pair of keys that are mathematically related: one key for encryption and another key for decryption. In digital signature processing, a user is assigned a private key that is not shared with anyone, and a public key that is given to anyone who receives digitally signed material from the user.

From California Code of Regulations, Title 2. Administration, Division 7. Secretary Of State Chapter 10. Digital Signatures, 22003, List of Acceptable Technologies: "The technology known as Public Key Cryptography is an acceptable technology for use by public entities in California..."

All major development environments such as Microsoft and Adobe support PKCS1 asymmetrical key encryption.

Authorized User is a person who has a user account with a Data Registry and is required to provide their correct user name and password in order to access the Data Registry. Data Registry users may be required to provide professional licensure, certification or credential information, or other qualifying information as condition of receiving authority to provide signatures for certain types of documentation.

Commission means the State of California Energy Resources Conservation and Development Commission, commonly known as the California Energy Commission, also referred to as the Energy Commission.

Commission Compliance Document Repository (also known as an electronic document repository) is an electronic database and document storage software application used for retention of Registered electronic Compliance Documents generated by Data Registries, and may also contain data and documentation relevant to other regulatory procedures administered by the California Energy Commission. The Commission Compliance Document Repository shall maintain these retained documents in accordance with Evidence Code section 1530-1532 (in the custody of a public entity).

Compliance Data Exchange File is an XML file that contains compliance data used to populate a Compliance Document. The Compliance Data Exchange File is part of the Compliance Registration Package.

Compliance Document is one of the following documents required for demonstration of compliance with Title 24, Part 6: Certificate of Compliance, Certificate of Installation, Certificate of Acceptance, Certificate of Verification.

Compliance Registration Package means encrypted digital data that is transmitted to a Data Registry that contains the data required for registering a Compliance Document with a Data Registry, including the Compliance Data Exchange File. The most commonly used method is the Zip file format, a data compression and archiving specification that is in the public domain. Files transmitted to a Data Registry using the Zip file format shall be password protected as described in JA7.6.3.2.7.

Compliance Report Generator is a web service maintained by the Commission that receives standardized document data exchange files from third party software approved by the Commission and produces the document registration package required to complete registered compliance documents in data registries that are approved by the Commission.

Compliance Software is software approved by the California Energy Commission for use in demonstrating compliance with the performance standards in Title 24 Part 6.

Cryptographic Hash Function is a mathematical function that creates a unique number that represents the contents of a block of data or text. In digital signature processing the data or text that the user is digitally signing is called the message. The number generated by the cryptographic hash function is called the message digest. To verify a copy of the message, the cryptographic hash function is applied to both the original message and the copy of the message, and the resulting message digests are compared. If they are both the same, then the copy is valid.

There is a number of cryptographic hash functions used in digital signature processing. All major development environments such as Microsoft and Adobe support the most commonly used hash algorithm family, SHA-1, SHA-256, SHA-384, SHA-512 hash algorithms which were developed by National Security Agency (NSA).

Data Registry is a web service with a user interface and database maintained by a Registration Provider that complies with the applicable requirements in Reference Joint Appendix JA7, with guidance from the Data Registry Requirements Manual, and provides for registration of residential or nonresidential compliance documentation used for demonstrating compliance with Part 6.

> **Residential Data Registry** is a Data Registry that is maintained by a HERS Provider, that provides for registration, when required by Part 6, of all residential compliance documentation and the nonresidential Certificate of Verification.
>
> **Nonresidential Data Registry** is a Data Registry that is maintained by a Registration Provider approved by the Commission, that provides for registration, when required by Part 6, of all nonresidential compliance documentation. However, nonresidential data registries may not provide for registration of nonresidential Certificates of Verification.

Data Registry Requirements Manual is a document that provides additional detailed guidance regarding the functional and technical aspects of the Data Registry requirements given in Joint Appendix JA7.

Digital Certificate is a computer-based record that contains a person's identifying information and the person's digital signature public key, as well as information about the certificate authority that issued the Digital Certificate and the certificate authority's digital signature verifying the authenticity of the person's identity and digital signature. Although the Secretary of State Digital Signature regulations, Section 22003 (a) 2C states "although not all digitally signed communications will require the signer to obtain a certificate, the signer is capable of being issued a certificate to certify that he or she controls the key pair used to create the signature."

Digital Signature an electronic signature that incorporates cryptographic methods of originator authentication, allowing the identity of the signer and the integrity of the data to be verified. The regulations adopted by the Secretary of State that govern the use of Digital Signatures for use by public entities in California are found in the California Code of Regulations, Title 2, Division 7, Chapter 10 Digital Signatures.

DOCUMENTATION AUTHOR is a person who prepares a Title 24 Part 6 compliance document that must subsequently be reviewed and signed by a responsible person in order to certify compliance with Part 6.

Electronic Signature is a "computer data compilation of any symbol or series of symbols executed, adopted, or authorized by an individual to be the legally binding equivalent of the individual's handwritten signature." US 21 Code of Federal Regulations (CFR) Section 11.3.

For the purposes of using electronic signatures to sign compliance documents, the electronic signature shall be an electronic image of the signer's handwritten signature.

Executive Director means the Executive Director of the Energy Commission.

Field Technician is a person who performs acceptance tests in accordance with the specifications in Reference Joint Appendix NA7, and reports the results of the acceptance tests on the Certificate of Acceptance in accordance with the requirements of Section 10-103(a)4.

HERS is the California Home Energy Rating System as described in TITLE 20, Chapter 4, Article 8, Section 1670.

HERS Provider is an organization that administers a home energy rating system as described in TITLE 20, Chapter 4, Article 8, Section 1670.

HERS Rater is a person who has been trained, tested, and certified by a HERS Provider to perform the field verification and diagnostic testing required for demonstrating compliance with the Part 6, as described in TITLE 20, Chapter 4, Article 8, Section 1670(i).

HERS Provider Data Registry is a Data Registry maintained by a HERS Provider.

Login (see Secure Login).

Message is a block of data or text that has been digitally signed.

Message Digest is the unique number generated when a Cryptographic Hash Function is applied to the Message which is the data or text that is digitally signed.

Password is a string of characters used for authenticating a user on a computer system.

Private Key is one of the keys in Asymmetric Key Encryption used in a Digital Signature. As its name implies, the Private Key should only be known to the owner of the Digital Signature. The private key is used to encrypt the Message Digest of the message that the user digitally signed.

Public Key is one of the keys in Asymmetric Key Encryption used in a Digital Signature. As its name implies, the Public Key must be made public to receivers of digitally signed documents in order to decrypt the Message Digest.

Registered Document is a compliance document that has been submitted to a residential or nonresidential Data Registry for retention, verified as complete, and has gone through the registration process so that the Registered Document displays all applicable electronic signatures as well as the Registration Provider's digital certificate and the document's unique registration number. The image of the registered document is accessible for printing or viewing by authorized users of the Data Registry via the Registration Provider’s internet website. The registered document’s unique visible registration number is appended onto the document image by the Data Registry.

A Registered Document meets all applicable requirements in Standards Section 10-103(a), Reference Joint Appendix JA7, and may conform to the guidance given in the Data Registry Requirements Manual.

Registration is the process applicable to electronic Compliance Documents that are verified as complete by the Data Registry, and are electronically signed by all required Data Registry Authorized Users. Registration is initiated when an authorized Registration Signer signs the Compliance Document electronically where subsequently the Data Registry adds the Registration Signer's Electronic Signature to the signature block, appends a unique Registration Number to each page of the document, and then applies the Registration Provider's Digital certificate issued by a Certificate Authority approved by the California Secretary of State to the Compliance Document and displays the Registration Provider's digital signature in the signature block. When Registration is complete, the Data Registry immediately and automatically transmits a copy of the completed Registered Compliance Document to the Commission Compliance Document Repository and also retains a copy of the Registered Compliance Document for use by authorized users for submittals.

Registration Number is an alphanumeric sequence of digits and delimiters appended to a Compliance Document when the document's Registration Signer provides his or her Electronic Signature to the Data Registry to complete Registration for any document. Each Registration Number shall be unique to only one document. The registration numbering convention utilizes specific digits to reference the document type, revision level, and the parent-child relationships between the compliance documents in a specific project.

Registration Provider is an organization that administers a Data Registry service that conforms to the requirements in Reference Joint Appendix JA7 and may conform to the guidance given in the Data Registry Requirements Manual.

Registration Signer is a Responsible Person as defined in Title 24, Part 1, Sections 10-103(a)1, 10-103(a)3, 10-103(a)4, or 10-103(a)5 who has established a user account with a Data Registry and has provided sufficient evidence to the Registration Provider to qualify for the authorization to register applicable compliance documentation by providing an electronic signature. The Documentation Author or Field Technician, and Registration Signer on a compliance document may be one and the same person or they may be different persons.

Secure Login means the unique Username and Password given to an Authorized User for maintaining the security of the Data Registry.

Standards means the California Building Energy Efficiency Standards, Title 24, Part 6.

Standards Data Dictionary (SDD) is a dictionary that contains all data and technical terms used to describe building components, equipment, attributes and measurements that are regulated by the Standards. The purpose of the SDD is to provide the vocabulary that is used in expressing standards as well as published compliance documentation.

URI stands for Uniform Resource Indicator which is a standard for identifying a name or a resource on the Internet.

URL stands for Uniform Resource Locator is a type of URI used to identify locations on the World Wide Web

Username is a name that uniquely identifies someone on a computer system. The Username is paired with a Password to create a Secure Login.

W3C stands for World Wide Web Consortium which is an international standards body that develops standards for the World Wide Web.

XML stands for Extensible Markup Language and is a set of rules for encoding documents in machine-readable form to facilitate the electronic transmission of documents. XML standard was developed by the W3C

XML Schema refers to XML Schema Definition Language, commonly referred to as XSD, which is another standard defined by the W3C. An XML schema uses XSD to define a set of rules to which an XML document must conform in order to be considered valid according to that schema. The rules can include definition of major organizational units, definition of data elements and attributes data types, constraints on valid values such as upper and lower bounds, and whether data is required or optional.

XSL-FO stands for Extensible Stylesheet Language Formatting Objects and is a standard of the W3C for representing content from an XML document. It is based on a standard vocabulary of document plus formatting and layout directives that can be interpreted by a computer application called an FO processor. XSL-FO is commonly used as a intermediary to generate PDF and printable documents.

XSLT stands for Extensible Stylesheet Language Transformation which is a standard from the W3C for translating an XML document into another format such as XSL-FO or HTML.

JA7.3 Introduction

A Data Registry is a web service with a user interface and database maintained by a Registration Provider that provides for registration of residential or nonresidential compliance documentation used for demonstrating compliance with Part 6. Data Registries shall conform to the requirements specified in Reference Joint Appendix JA7 and may conform to the guidance given in the Data Registry Requirements Manual.

A Data Registry shall include the minimum functional features specified by Reference Joint Appendix JA7. Additional guidance on functional features may be given in the Data Registry Requirements Manual.

Document registration is the process for verifying, serializing, and signing electronic compliance documents produced using a method approved by the Commission. Approved Data Registries are the entities that implement and manage the procedures for registering documents. The procedures include authenticating and approving users to submit or sign electronic documents and data for registration, validating that these data and documents are completed in conformance with the requirements defined by the Standard Section 10-103(a) and Reference Joint Appendix JA7, and affixing the electronic signature of the Documentation Author. The registration process is completed only when an authorized registration signer signs the compliance document electronically; whereupon the Data Registry automatically performs the following actions:

(a) Adds the registration signer's electronic signature to the document's signature block.

(b) Appends a unique registration number to each page of the document.

(c) Applies the Registration Provider's digital certificate containing their digital signature to the entire compliance document.

(d) Displays the Registration Provider's digital signature in the signature block that includes a date and time stamp corresponding to the date and time of the document registration process conclusion.

(e) When the document registration process has concluded, the Data Registry shall immediately and automatically transmit a copy of the completed registered compliance document to the Commission Compliance Document Repository.

(f) The Data Registry shall also retain a copy of the registered compliance document for use by authorized users for submittals.

Paper copies of registered compliance documents printed directly from the Data Registry website, or electronic copies downloaded from the Data Registry website shall be used for submittal to enforcement agencies or other parties to the building construction project.

The Registration Provider's digital signature provides for automatic electronic verification of the authenticity of electronic copies of registered documents.

The electronic copies of the registered documents retained by the Commission Compliance Document Repository shall be utilized to satisfy public information requests, perform research, and shall be maintained in a manner conforming to Evidence Code section 1530-1532 (in the custody of a public entity) for use in enforcement of the Standards.

Any person or entity wishing to have a Data Registry approved shall submit an application to the Energy Commission. Data Registries may be approved by the Energy Commission or by the Executive Director to provide document Registration services. Data Registries shall conform to the requirements of Reference Joint Appendix JA7. Detailed guidance for implementation of the requirements in Appendix JA7 may be given in the Registry Requirements Reference Manual.

JA7.4 Roles and Responsibilities, and Authorized Users

This section summarizes the roles and responsibilities for the individuals who participate in the document registration procedures administered by a Data Registry. However, this section is not a complete accounting of the responsibilities of the respective parties.

JA7.4.1 Registration Provider

A Registration Provider is an entity that has been approved by the Energy Commission to provide Data Registry services. Registration Providers maintain Data Registries that conform to the requirements in Reference Joint Appendix JA7 and utilize the guidance in the Data Registry Requirements Manual. Registration Providers are required to retain completed registered compliance documents and make copies of the registered documents available to authorized users for submittals to enforcement agencies or to other parties to the building project that require the documents. Registration Providers make services available that enable authorized users of their Data Registry to verify the authenticity of paper and electronic copies of the retained registered documents.

In order to facilitate Commission oversight of a Registration Provider's documentation processes, the Registration Providers shall grant authorization to Energy Commission staff to view the data and documents retained in the Data Registry, and shall provide functionality that allows Energy Commission staff to query retained data or documents. For residential compliance document registration, the Registration Provider is required to be a HERS Provider approved by the Energy Commission. For nonresidential compliance document registration, the Registration Provider is required to be a Registration Provider approved by the Commission.

JA7.4.2 Authorized Users

Authorized users are persons who have established a user account with a Data Registry and are required to provide their correct user name and password in order to access the secured information in that Data Registry. Data Registry authorized users may be required to provide proof of professional licensure, professional certification, or other qualifying information as a condition for receiving authority to access records or provide signatures for certain types of documentation. User accounts shall be established for each Data Registry for which a user must gain access.

The information required to establish a user account with a Data Registry shall be determined by the Registration Provider who shall gather and verify any and all information necessary to validate a user applicant's identity or applicable professional qualifications as prerequisite to authorizing assignment to a user applicant an electronic signature, or permissions as a documentation author, or permissions as a registration signer.

Authorized Users may not share their Secure Login with any other individual for any purpose. Violation of this policy may constitute fraud, and can be cited as a reason for denial of access for all the persons involved, including the user who releases their Secure Login to another person or persons, and the person or persons who use the Secure Login to gain access the Data Registry.

Additional guidance for establishing user accounts may be given in the Data Registry Requirements Manual.

The roles and responsibilities in the remainder of this section JA7.4 describe specific types of authorized users of the Data Registry. Additional guidance describing roles and responsibilities of Registration Providers and authorized users may be described in the Data Registry Requirements Manual.

JA7.4.3 View-Only Authorized User

Data Registries may provide user accounts that allow users to view only certain records. These types of accounts may allow access to records to view, print or download copies of compliance documents in order to validate the information submitted to enforcement agencies on paper copies of registered documents, and for determining the status of completion of the full documentation package for a project.

JA7.4.4 Documentation Author

Documentation Authors are persons who prepare Title 24 Part 6 compliance documents that must subsequently be reviewed and signed by a Registration Signer (responsible person) in order to certify compliance with Part 6.

Documentation Authors assist with input of information required to complete the compliance documents required for the registration procedures in a Data Registry. Documentation authors who provide support for preparation of compliance documents in a Data Registry shall establish a user account and an electronic signature authority with the Data Registry. Documentation Authors shall sign the documents they prepare, but documentation author signatures do not indicate or assume responsibility for the truth or validity of the information reported on a compliance document. Documentation Authors may engage in business relationships with the Registration Signers they assist, or they may be employees of the Registration Signers they assist.

JA7.4.5 Field Technician

The Field Technician is responsible for performing the acceptance test procedures and documenting the results of the acceptance tests on a Certificate of Acceptance. The Field Technician shall sign the Certificate of Acceptance to certify that the information he reports on the Certificate of Acceptance is true and correct. When registration of a Certificate of Acceptance is required, the Field Technician shall establish a user account and an electronic signature authority with the Data Registry in order to provide electronic signatures to complete the Certificate of Acceptance. When a Field Technician also performs the data input to prepare the Certificate of Acceptance documentation, the Field Technician shall also provide the documentation author signature on the Certificate of Acceptance. The Field Technician may be, but is not required to be the installer of the system that requires Acceptance Testing.

JA7.4.6 Registration Signer (Responsible Person)

The Registration Signer is the person responsible for the work identified on a compliance document (Certificate of Compliance, Certificate of Installation, Certificate of Acceptance, or Certificate of Verification).

(a) **For Certificate of Compliance documentation**, the Registration Signer shall be eligible under Division 3 of the Business and Professions Code to accept responsibility for the building design.

(b) **For Certificate of Installation documentation**, the Registration Signer shall be eligible under Division 3 of the Business and Professions Code to accept responsibility for the building construction or installation in the applicable classification for the scope of work identified on the document.

(c) **For Certificate of Acceptance documentation**, the Registration Signer shall be eligible under Division 3 of the Business and Professions Code to accept responsibility for the system design, construction or installation in the applicable classification for the scope of work identified on the document.

(d) **For Certificate of Verification documentation**, the Registration Signer shall be a certified HERS Rater.

The Registration Signer shall provide a signature to certify that the information reported on a compliance document for which he is responsible is true and correct. When registration of a compliance document is required, the Registration Signer shall establish a user account and an electronic signature authority with the Data Registry. When a Registration Signer also performs the data input to prepare a compliance document, the Registration Signer shall also provide the documentation author signature on the compliance document.

JA7.4.7 Enforcement Agency

Standards Section 10-103(d) requires the Enforcement Agency to verify that all required compliance documents for a project are completed, signed, and submitted or posted as required by Standards Section 10-103(a). Thus, when Section 10-103(a) requires that a compliance document be registered with a Data Registry, the Enforcement Agency must verify that compliance documents submitted when applying for a permit, or

posted in the field are registered documents. Such enforcement agency verification shall be by any valid means the Enforcement agency considers satisfactory.

Enforcement Agency persons may establish user accounts with data registries to enable viewing the compliance documents for projects for which their jurisdiction has enforcement authority.

Enforcement Agencies may be authorized to enter notations into project records in data registries to communicate plan check and field inspection information to builders, designers, installers and raters.

JA7.5 Document Registration Requirements

JA7.5.1 Overview

All compliance documents for which registration is required shall be produced by a method approved by the Commission and then registered with an approved Data Registry by authorized users of the Data Registry. Procedures for submittal of required documentation to enforcement agencies and other parties to the building construction project are given in Reference Residential Appendix RA2, and Reference Nonresidential Appendices NA1. Standards Section 10-103(a) defines the administrative requirements for the compliance documents (Certificate of Compliance, Certificate of Installation, Certificate of Acceptance, and Certificate of Verification).

Compliance document layouts shall be defined by standardized data structures implemented according to the requirements given in JA7.7. Compliance documents produced by the Data Registry shall conform to the applicable informational content and graphical layout formatting approved by the Energy Commission.

The Data Registry shall be capable of tracking all compliance documentation and maintaining the correct associations between related documents within a building project. Any revisions to compliance documents shall be tracked and reported.

The Data Registry shall ensure that registered documents are retained such that they are available to authorized users for submittals to enforcement agencies or other parties to the building construction project that require copies of the registered compliance documents.

Contingent upon the availability of a Commission Compliance Document Repository, the Data Registry shall immediately and automatically, upon concluding the registration of compliance documents, transmit a copy of each registered compliance document to the Commission Compliance Document Repository.

JA7.5.2 Document Appending

The compliance document informational content, graphical layout, and formatting used by the Data Registry shall conform to the document layouts and data structures approved by the Energy Commission as further described in Section JA7.7. The Data Registry shall be capable of receiving electronic compliance documents and compliance data produced by the methods approved by the Commission, and append the compliance documents received from authorized users according to the requirements in JA7.5.

When data exchange procedures for compliance documents are required, the data definitions and data formatting required by Section JA7.7 shall be used.

Electronic document layouts implemented in Commission-approved methods for producing compliance documents shall include specifications indicating coordinate locations and positions where the Data Registry will affix Registration Signer's Electronic Signatures, registration numbers, registration date and time record information and Data Registry provider logos and watermarks.

The ACM Reference Manual will include additional detailed guidance necessary to assist compliance software tools in providing document output formatted to coordinate with these Data Registry-specific information features.

The following conventions shall be enforced:

JA7.5.2.1 Registration Number

The registration number for a multiple-page document shall be visible on all pages of the document.

JA7.5.2.2 Registration Date and Time

The registration date and time shall reflect the point in time corresponding to the submittal of the electronic certification signature by the person responsible for the information on the document. The format for the

registration date and time record shall be calendar date (year-month-day) with time of day (hour-minutes-seconds). Hour of the day shall utilize 24-hour format. Additional guidance describing the formatting and location for these features may be given in the Data Registry Requirements Manual.

JA7.5.2.3 Performance Compliance Software Calculation Date and Time

The performance compliance calculation date and time information that is generated by the compliance software tool shall be retained as data in the record for the registered Certificate of Compliance document in the Data Registry.

The date and time information for the compliance calculation for a multiple-page performance Certificate of Compliance document shall be visible on all pages of the compliance document.

JA7.5.2.4 Electronic Signatures

Registered documents shall be electronically signed by the documentation authors, and by the persons who are eligible to assume responsibility for the documentation as specified by Standards Section 10-103(a) and who are authorized users of the Data Registry who have established an electronic signature authority with the Data Registry. The Registration Provider shall ensure that all required electronic signature features and procedures specified in Section JA7.6 are implemented and enforced. The electronic signature layouts and locations shall be consistent with the document layouts approved by the Energy Commission. Additional guidance on the location and formatting may be given in the Data Registry Requirements Manual.

JA7.5.2.5 Digital Signatures

The Registration Provider shall ensure that the required digital signature procedures specified in Section JA7.6 are enforced. Guidance for the location for the visible aspects of the Registration Provider's digital signature may be described in the Data Registry Requirements Manual.

JA7.5.3 Data Validation for Compliance Document Registration

Data Registries shall have the capability to automatically perform validation of data entered by a documentation author to complete a compliance document as required by the document data validation procedures in Section JA7.6.3.2.2.

There shall be a data validation rule set specific to each compliance document.

Detailed guidance for the data validation rules may be provided in the Data Registry Requirements Manual.

Compliance document data validation rules may be implicit in the formatting of the data elements that define a compliance document for data exchange processes, or data validation rules may be implemented by the Data Registry software.

Data validation rules or specifications may be defined in the XML schema that represents the compliance data for a compliance document as further described in Section JA7.7. Validation criteria such as whether data is required or optional, the required data type, the data numeric upper and lower bounds, acceptable enumeration values, calculations that must be performed, etc., can all be defined in the XSD file.

The Data Registry Requirements Manual will provide guidance for the methods for validation of the data taking into consideration the specifications for the data elements for the data exchange processes described in Section JA7.7.

The Data Registry may flag data entry errors at any time during data entry, however all data validation shall be completed prior to allowing a documentation author signature action to be completed. Documents shall not be marked as ready for registration signing unless all required data validation errors have been corrected, and a documentation author signature action has been completed successfully.

The following conventions shall be enforced as a condition for registration of a document:

JA7.5.3.1 Null Entries

When completion of a compliance document requires data entry for an information field, the data shall be entered, otherwise registration shall not be allowed. However, if data entry for a particular information field is optional, a null entry shall not prevent registration from concluding.

JA7.5.3.2 Calculated Values

Whenever possible or practical, the Data Registry shall perform the calculations required for determining compliance results. Guidance for calculations may be given in the Data Registry Requirements Manual.

JA7.5.3.3 Look-up Functions for Calculations

Whenever possible or practical, the Data Registry shall use lookup functions that provide values needed for completing calculations as referenced from the applicable protocols in the Reference Appendices or from Standards compliance criteria. Guidance for application of lookup functions may be given in the Data Registry Requirements Manual. .

JA7.5.4 Registration Numbering Conventions

Registration numbers used for the document registration procedures described in Joint Appendix JA7 are alphanumeric sequences of digits and delimiters that are appended to a compliance document when the document's registration signer performs an electronic signature action in the Data Registry to conclude the registration procedure for a document. Each registration number shall be unique to only one document. The registration numbering convention assigns significance to certain digits in order to define the document type, document revision level, and the parent-child relationships between the compliance documents contained in a project. As the compliance document types required for residential projects are different than those required for nonresidential projects, the numbering conventions used shall conform to the conventions specified in sections JA7.5.4.1 and JA7.5.4.2 respectively.

Registration numbering conventions for other documentation processes are possible. Any new document process for which the Commission requires the documents to be registered shall use a registration numbering convention that is approved by the Commission.

JA7.5.4.1 Nonresidential Registration Numbering Convention

Contingent upon approval of nonresidential Data Registries, a nonresidential registration numbering convention shall be determined and approved by the Commission in conjunction with the approval of the first nonresidential Data Registry, and shall be used by all nonresidential data registries thereafter. The nonresidential registration numbering convention specification shall use a similar design concept as used in the residential registration numbering convention specified in Section JA7.5.4.2 which assigns significance to digits in order to define the document type, document revision level, and the relationships between the compliance documents contained in a project.

JA7.5.4.2 Residential Registration Numbering Convention

The registration numbers assigned to residential compliance documents by the Data Registry at the conclusion of the registration process shall conform to the conventions described in this section. Refer to Figure JA7.5-1 for information that defines the numbering convention, and an example registration number.

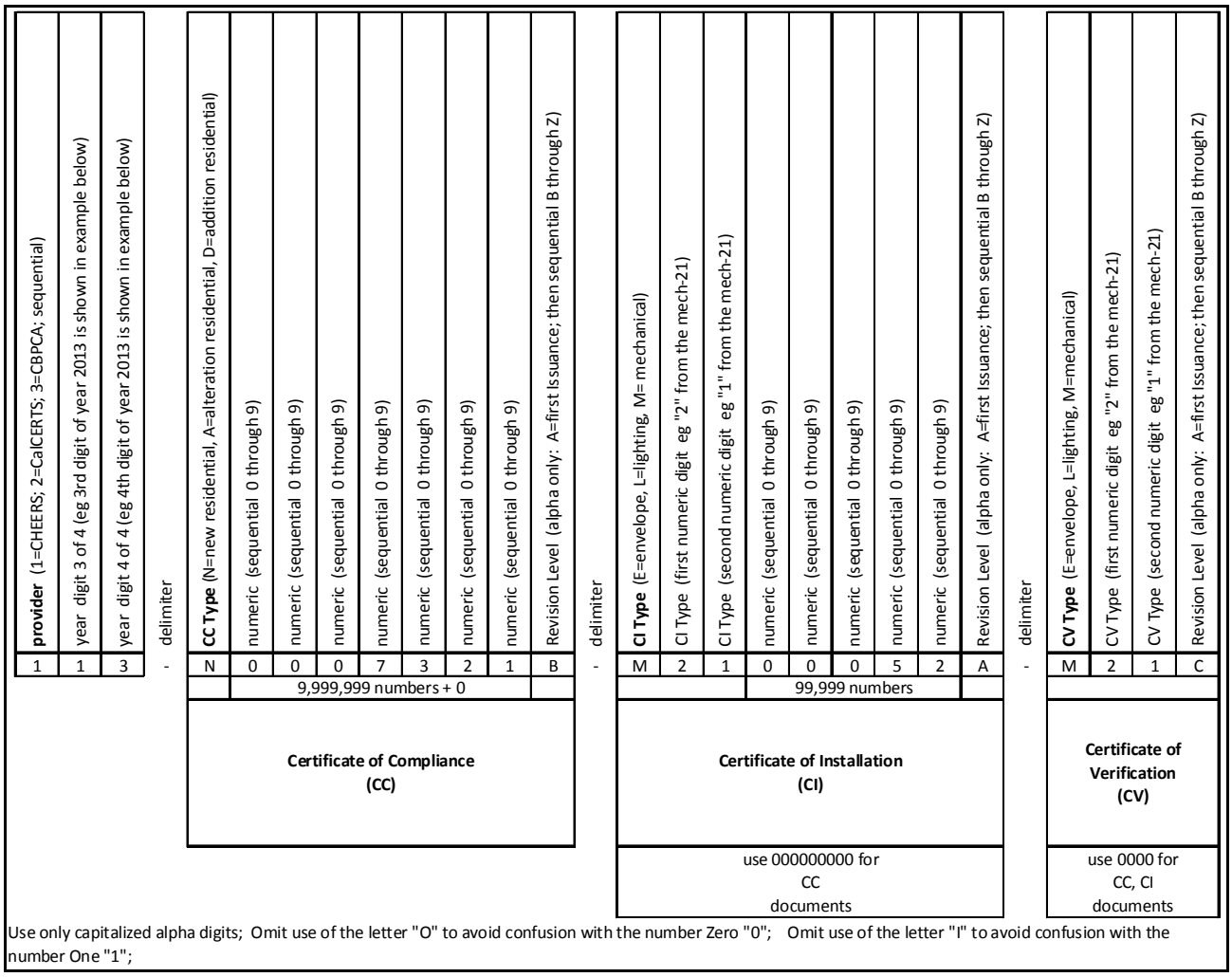

Figure JA7.5-1. Residential Registration Numbering Convention (and Example Number)

As shown in Figure JA7.5-1, the significance of the digits provides descriptors for: the Registration Provider; the year; the type of compliance document; relationships between the documents; and the revision level of the respective documents. The digit type (Alpha or Numeric) and sequencing are also given.

The following are examples of registration numbers and the interpretation of the significance of the numbering as consistent with the descriptions given in Figure JA7.5-1.

113-N0007321B-000000000-0000: CHEERS Provider, 2013 year project, residential new construction Certificate of Compliance document type, and sequential number 0007321, revision B.

113-N0007321B-M2100052A-0000: Certificate of Installation document type associated with the above Certificate of Compliance #113-N0007321B-00000000-0000, MECH-21 Certificate of Installation type, and sequential number 00052, revision A.

113-N0007321B-M2100052A-M21C: Certificate of Verification associated with the above Certificate of Installation #113-N0007321B-M2100052A-0000, MECH-21 HERS Certificate of Verification document type, revision C.

JA7.5.5 Verification of Authenticity of Copies of Registered Documents

For projects for which Standards Section 10-103(a) requires the documents to be registered, compliance requires that documents shall first be registered with a Data Registry before being submitted to an enforcement agency for approval. Additionally, when revisions to the compliance documents are necessary, compliance requires the revised documents to be registered with the Data Registry prior to re-submittal to the enforcement agency for approval. Thus, the current revision of a registered document in the Data Registry shall be the reference document for validation of the authenticity of a document submitted to an enforcement agency or to another party to the construction project.

Registration Providers shall make available document verification services to authorized users of their Data Registry.

Methods for verification of a document's authenticity shall include basic visual comparison of a copy of a registered document to the current version of the registered document on file in the Data Registry.

Additionally, the automated document validation utility that is made possible by digital signature technology makes it possible for a document recipient to automatically verify an electronic copy of a registered compliance document without having to manually inspect it against the registered document in the Data Registry. As described in Section JA7.3, the last step in the document registration procedure in the registry applies the Registration Provider's digital certificate containing their digital signature to the entire compliance document, thus providing the capability for automated verification of authenticity of electronic copies of the registered document.

Additional guidance for use of the Data Registry digital signature technology for verification of document authenticity may be given in the Data Registry Requirements Manual, and in the Residential and Nonresidential Compliance Manuals.

JA7.5.6 Project Document Configuration

Data Registries shall be capable of tracking all compliance documentation and maintaining the correct associations between related documents, including revisions and completion statuses for all documents within a building project.

A certificate of compliance establishes the requirements for project documentation for prescriptive and performance compliance methods.

2013 Standards introduced mandatory HERS verification for residential projects for which there are options for compliance with the mandatory requirement. Thus, indication of the option selected for compliance with a residential mandatory measure may not be known until after a Certificate of Installation is submitted to a Data Registry to demonstrate compliance with the mandatory requirement. The Data Registry shall track when Certificate of Installation documents are registered for any mandatory measure that has an option for compliance; shall report any HERS verification requirement that is triggered by the mandatory measure; and ensure that any required HERS verification is completed as a condition of compliance. Additional guidance describing residential Data Registry tracking of mandatory measure options and the required documentation for the mandatory options may be provided in the Data Registry Requirements Manual.

JA7.5.6.1 Project Status Reports

The status of completion of a project shall be reported by the Data Registry.

The Data Registry shall determine the documents required for a project based on the Certificate of Compliance and maintain a summary that reflects the current status of completion of the required documents and shall be readily accessible to authorized users of the Data Registry. Access to the report shall be facilitated by use of search parameters relevant to the project as listed in Sections JA7.5.6.1.1 and JA7.5.6.1.2.

Enforcement Agencies may be authorized to enter notations into project records in data registries to communicate plan check and field inspection information to builders, designers, installers and raters.

The project status report shall be made available in a printable format.

Minimum information requirements for the project status report shall include the following:

JA7.5.6.1.1 Project Status Report Information for Residential Projects:

(a) Project name

(b) Project location (or address)

(c) Listing of the Certificate of Compliance documents required; date registered (or indicate not complete if the document record has been started but is not yet registered); registration number

(d) Listing of the Certificate of Installation documents required; date registered (or indicate not complete if the document record has been started but is not yet registered); registration number

(e) Listing of the Certificate of Verification documents required; date registered or indicate not complete if the document record has been started but is not yet registered); registration number

(f) Listing of the mandatory measure options required; options selected (refers to the Certificate of Installation and Certificate of Verification documentation).

JA7.5.6.1.2 Project Status Report Information for Nonresidential Projects:

Note: Nonresidential Document registration is contingent upon approval of a nonresidential Data Registry by the Commission, and the requirement for nonresidential document registration is not effective until January 1, 2015.

(a) Project name

(b) Project location (or address)

(c) Listing of the Certificate of Compliance documents required; date registered (or indicate not complete if the document record has been started but is not yet registered); registration number

(d) Listing of the Certificate of Installation documents required; date registered (or indicate not complete if the document record has been started but is not yet registered); registration number

(e) Listing of the Certificate of Acceptance documents required; date registered (or indicate not complete if the document record has been started but is not yet registered); registration number

(f) Listing of the Certificate of Verification documents required; date registered (or indicate not complete if the document record has been started but is not yet registered); registration number.

JA7.5.6.2 Revision Control

When a revision to a compliance document is made, the revised version of the compliance document shall also be registered (a registration signer must sign again to register the revision), and the revision digit for the compliance document shall be incremented. Thus a copy of each registered revision of each registered document shall be transmitted to the Commission Compliance Document Repository.

When a revision is made to a compliance document that is associated with one or more registered dependent (child) documents, the dependent documents shall have their registered status revoked, and their status shall be reported as incomplete (orphaned) until signed again by the registration signer subsequent to making any necessary changes to the "orphaned child" document made necessary by the revision of the applicable dominant (parent) document. A new registration signature is required for the orphaned child document in order to update the registration number such that the new revision level of both the parent and the child documents is shown.

A copy of the new revision of a document shall be submitted to the enforcement agency for all applicable approvals or inspections.

The data that was used to create obsolete versions of compliance documents shall not be required to be retained in the Data Registry history or memory. However, a copy of each revision of each registered electronic document shall be retained.

The current revision of any document in the registry shall be considered to be the only valid version of that document. All previous revisions of that document shall be considered obsolete, thus not valid for use for submittal to enforcement agencies to demonstrate compliance.

JA7.5.7 Certificate of Compliance Requirements

JA7.5.7.1 Prescriptive Certificate of Compliance Document

Procedures for submittal of prescriptive Certificate of Compliance documents may be by direct keyed-in data entry as described in Section JA7.7.1.1, or by other methods if approved in accordance with Section JA7.9. Guidance for the procedures and requirements for Data Registry features for prescriptive certificate of compliance document registration may be given in the Data Registry Requirements Manual.

JA7.5.7.2 Performance Certificate of Compliance Document:

Procedures for submittal of the performance Certificate of Compliance shall use Compliance Software approved by the Commission pursuant to all applicable procedures in Title 24 Part 1, Section 10-109, and shall conform to all applicable data exchange requirements given in Section JA7.7.

JA7.5.7.3 Multiple Orientation Plans (Residential)

The Data Registry shall ensure that multiple orientation performance Certificate of Compliance documents are configured in the Data Registry such that the registered multiple orientation Certificate of Compliance document is referenced for all build-outs of that master plan. The registered Certificate of Compliance that was approved by the enforcement agency shall be the Certificate of Compliance document that is the parent document for each and every dwelling unit built from that master plan.

Detailed guidance describing the procedures for tracking revisions to multiple orientation Certificate of Compliance Documents may be given in the Data Registry Requirements Manual.

JA7.5.7.4 Multifamily Dwelling units

The Data Registry shall ensure that multifamily whole-building performance Certificate of Compliance documents are configured in the Data Registry such that the registered multifamily Certificate of Compliance document is referenced for all dwelling units in the multifamily building. The registered Certificate of Compliance that was approved by the enforcement agency shall be the Certificate of Compliance document that is the parent document for each and every dwelling unit specified by that whole-building certificate of Compliance document.

Detailed guidance describing the procedures for tracking revisions to multifamily whole-building Certificate of Compliance Documents may be given in the Data Registry Requirements Manual.

JA7.5.8 Certificate of Installation Requirements

JA7.5.8.1 Residential Certificate of Installation

Procedures for submittal of residential Certificate of Installation documents may be by direct keyed-in data entry as described in Section JA7.7.1.1, or by other methods if approved in accordance with Section JA7.9. Detailed guidance for the functional and technical elements necessary for registration of residential Certificate of Installation for a Data Registry may be given in the Data Registry Requirements Manual.

JA7.5.8.2 Nonresidential Certificate of Installation

Nonresidential Certificate of Installation document registration is contingent upon the approval of nonresidential Data Registries, and in any event shall not be required before January 01, 2015.

Procedures for submittal of Nonresidential Certificate of Installation documents may be by direct keyed-in data entry as described in Section JA7.7.1.1, or by other methods if approved in accordance with Section JA7.9. Detailed guidance for the functional and technical elements necessary for registration of Nonresidential Certificate of Installation documents for a Data Registry may be given in the Data Registry Requirements Manual.

JA7.5.9 Certificate of Verification Requirements

Certificate of Verification documents are always registered documents.

Procedures for submittal of Certificate of Verification documents may be by direct keyed-in data entry as described in Section JA7.7.1.1, or by other methods if approved in accordance with Section JA7.9. Detailed guidance for the required functional and technical elements necessary for registration of Certificate of Verification documents for a Data Registry may be given in the Data Registry Requirements Manual.

JA7.5.9.1 Managing Sample Groups

HERS Provider Data Registries are required to manage the group sampling procedures. Details that describe the requirements for managing sample groups are given in Reference Residential Appendix RA2 and in Reference Nonresidential Appendix NA1.

JA7.5.9.2 Group Numbering Convention

Group number is a HERS Provider-designated identification number unique to the sample group to which a dwelling has been assigned. The Providers shall utilize the numbering convention given in Figure JA7.5-2. below. The group number shall be reported on all Certificate of Verification documents that utilize group sampling for compliance.

provider (1=CHEERS; 2=CalCERTS; 3=CBPCA)	year (eg 3rd digit of year 2013)	year (eg 4th digit of year 2013)	delimiter	numeric (sequential 0 through 9)	numeric (sequential 0 through 9)	numeric (sequential 0 through 9)	numeric (sequential 0 through 9)
1	1	3	-	0	7	3	1
				9,999 numbers + 0			

Figure JA7.5-2. Group Numbering Convention (and Example Number)

The following is an example group number and the interpretation of the significance of the numbering consistent with the descriptions given in Figure 4-1.

113-0731: CHEERS, group opened during year 2013, sequential group number 0731

JA7.5.10 Certificate of Acceptance Requirements

Certificate Acceptance document registration is contingent on the approval of nonresidential Data Registries, and in any event shall not be required before January 01, 2015.

Procedures for submittal of Certificate Acceptance documents may be by direct keyed-in data entry as described in Section JA7.7.1.1, or by other methods if approved in accordance with Section JA7.9. Detailed guidance for the required functional and technical elements necessary for registration of Certificates of Acceptance documents for a Data Registry may be given in the Data Registry Requirements Manual.

JA7.6 Electronic and Digital Signature Requirements

JA7.6.1 Introduction

This section defines the functional and technical requirements for the use of electronic and digital signatures in the registration of compliance documents. These specifications shall be implemented by a Data Registry as a condition of approval of the Data Registry by the Commission.

JA7.6.2 Overall Description

JA7.6.2.1 Interfaces - Main Users

(a) **Authorized Users** of Data Registries who must sign Compliance Documents either as the Documentation Author, or Field Technician, or as the Registration Signer (responsible person).

(b) **Registration Providers** who must implement the electronic and digital signature specifications into the Data Registry user interface to provide Electronic Signature capabilities to the Authorized Users of the Data Registry, and must append their digital signature to all registered compliance documents created in their Data Registry.

(c) **Commission Compliance Document Repository** which must receive registered documents transmitted from the Data Registries and will process the digital signature to validate the sender and the contents.

(d) **Persons or Software Entities who Validate Electronic Documents** who may receive electronic copies of registered documents made available by the Data Registries and will process the digital signature to validate the sender and the contents.

(e) **Compliance Software Tools** that export compliance documents for transmittal to the Data Registries that must subsequently be electronically signed and registered in the Data Registry.

JA7.6.2.2 Major Functions

The electronic and digital signature requirements of the Data Registry consist of the following major functions:

JA7.6.2.2.1 Electronic Signature Capability

The Data Registry shall provide electronic signature capability to authorized users.

JA7.6.2.2.2 Document Data Validation

The Data Registry shall check that compliance documents are complete and the data entered meets the data validation rules for the applicable document before making the documents available for signing or registering.

JA7.6.2.2.3 Signer Review and Signature Actions

The Data Registry shall provide functionality for authorized users to select, review, and sign compliance documents as a Documentation Author, Field Technician, or Registration Signer.

JA7.6.2.2.4 Digital Signatures

The Data Registry shall apply the Registration Provider's Digital Signature to compliance documents electronically signed by the registration signer when concluding the document registration procedure in the Data Registry, and then append the Registration Provider's digital certificate issued by a certificate authority approved by the California Secretary of State.

The function of the Registration Provider's digital certificate is to provide verification from an approved certificate authority that the document came from the Registration Provider's Data Registry and to provide

automated document verification to persons or agencies that receive electronic submittals of these registered documents.

JA7.6.2.2.5 Transmittal to Commission Compliance Document Repository

The Data Registry, upon completion of the registration procedure, shall immediately and automatically transmit a copy of the completed registered compliance document to the Commission Compliance Document Repository which will process the Registration Provider's digital certificate to validate the sender and the compliance document contents.

JA7.6.2.2.6 Document Retention

The Data Registry shall retain a copy of the completed registered electronic compliance document and make the document available for use by authorized users of the registry who may access a copy of the registered document and may subsequently process the Registration Provider's digital certificate to verify the sender and the compliance document contents.

JA7.6.2.2.7 Receive and Process Output From Compliance Software and Other Software Tools

The Data Registry shall process the completed Compliance Registration Package from Compliance software tools or other software tools approved by the Commission for use in the Compliance Document Registration process.

JA7.6.2.3 User Characteristics

There are four categories of users who will participate in the electronic and digital signature functionality:

JA7.6.2.3.1 Users who will use electronic signatures to sign and register compliance documents.

This is a heterogeneous category composed of HERS Raters, building designers, building contractors, installation contractors, energy consultants, home owners, and others.

JA7.6.2.3.2 Users who use a digital certificate to secure registered compliance documents.

This category consists of each approved Registration Provider.

JA7.6.2.3.3 Users who will receive the electronically transmitted registered compliance documents

These users will need to apply decryption processing using the digital certificate to identify the sender and verify the contents of the received document. The Commission Compliance Document Repository is a main user in this category. Also, users who take advantage of digital signature automated verification capabilities to verify the authenticity of registered compliance documents received as electronic submittals from various other participants in the compliance documentation process will be another main user in this category.

JA7.6.2.3.4 Users who transmit electronic compliance documentation to the Data Registry.

Title 24 compliance software tools are the main users in this Category. The electronic compliance documents exported from the compliance tools must be formatted to provide location coordinate information for use when applying the visible aspects of electronic and digital signatures to the compliance documents. The Data Registry must be capable of appending the visible aspects of electronic and digital signatures to the correct locations in the signature blocks on the imported compliance documents during the subsequent electronic signature and registration procedures.

Detailed guidance for electronic and digital signature target coordinate information may be described in the 2013 Alternative Calculation Method (ACM) Reference Manual to assist in the implementation of the requirements by compliance software vendors. The Data Registry shall implement the capability to append the visible aspects of electronic and digital signatures to the signature blocks on compliance documents in these locations.

JA7.6.2.4 Constraints

JA7.6.2.4.1 Schedule Constraint:

The electronic and digital signature capabilities shall be implemented at least six months before the effective date for the 2013 Standards.

JA7.6.2.4.2 Software Constraint:

The digital signature technology including the hash algorithm and asymmetric key encryption used shall be consistent across all Data Registries because the Commission Compliance Document Repository will not support multiple approaches.

JA7.6.3 Specific requirements

JA7.6.3.1 Interface Requirements

JA7.6.3.1.1 User interfaces

JA7.6.3.1.1.1 All Data Registries shall utilize the same informational content, graphical layout and formatting unique to the applicable type of compliance document when displaying the completed compliance documents for review and signing as part of the registration process. These document layouts shall conform to the informational content, graphical layout and formatting approved by the Commission. Additional detailed guidance regarding informational content, graphical layout and formatting will be presented in the Data Registry Requirements Manual.

JA7.6.3.1.2 Software interfaces

JA7.6.3.1.2.1 All registered compliance documents transmitted from any Data Registry shall be secured with the Registration Provider digital signature.

JA7.6.3.1.2.1.1 All Data Registries shall use the same hash algorithm to generate the document's message digest for the digital signature.

JA7.6.3.1.2.1.2 All Data Registries shall use the same asymmetrical key encryption for generating the digital signature private and public keys used to encrypt and decrypt the message digest.

JA7.6.3.1.2.1.3 Registration Providers shall provide their digital certificate which contains their digital signature public key to any other software entity that receives registered compliance documents from their Data Registry, in particular the Commission document repository.

JA7.6.3.1.2.1.4 The Commission document repository, which will receive registered compliance documents electronically from Data Registries, will have to implement digital signature processing capability in order to perform automatic verification and validation processing on received documents.

JA7.6.3.1.2.1.5 Users who take advantage of digital signature automated verification capabilities to verify the authenticity of registered compliance documents received from Data Registries will have to implement digital signature processing capability in order to perform automatic verification and validation processing on received documents. The Adobe Reader software tool, which is freeware, has the capability to process the digital signatures for any digitally signed documents that utilize standardized digital signature technology.

JA7.6.3.1.2.2 All Data Registries shall implement the same security protocol for importing completed compliance document transmittals generated by 3rd party software tools. The security protocol shall be approved by the Commission.

JA7.6.3.1.2.2.1 Guidance shall be provided in the 2013 ACM Reference Manual and the 2013 Data Registry Requirements Manual to assist all 3rd party software entities in implementing the required security protocols.

JA7.6.3.2 Functions

JA7.6.3.2.1 Electronic Signature Capability

The Data Registry shall provide electronic signature capability to authorized users who have the role of Documentation Author, Field Technician, or Registration Signer. A Field Technician Signature is required only on Certificate of Acceptance Documentation. A Certificate of Acceptance document requires that there be both a Documentation Author signature and a Field Technician signature prior to registration signing.

JA7.6.3.2.1.1 Any authorized user of a Data Registry can request an electronic signature in order to sign compliance documents as the documentation author, Field Technician, or as the registration signer.

JA7.6.3.2.1.2 Registration Providers shall gather and verify any and all information necessary to validate a user applicant's identity and applicable qualifications as prerequisite to authorizing assignment to a user applicant an electronic signature, or permissions as a documentation author, Field Technician, or Registration Signer.

JA7.6.3.2.1.3 Authorized users shall provide to the Data Registry an electronic image of their handwritten signature for use in displaying their electronic signature.

JA7.6.3.2.2 Document Data Validation

The Data Registry shall check that compliance documents are complete and shall perform the required data validation for the document before making them available for signing and/or registering. The guidance for the data validation for each document shall be provided in the Data Registry Requirements Manual.

Any applicable error messages shall be posted indicating the actions necessary as prerequisite to completion of the registration process.

JA7.6.3.2.2.1 When a documentation author indicates that the compliance document is complete and he/she is ready to sign it, the Data Registry shall verify that all information necessary to complete the document has been provided as prerequisite to making the signing functionality available to the documentation author.

JA7.6.3.2.2.2 The Data Registry shall verify that a compliance document is complete and has received the documentation author's signature as prerequisite to making the compliance document available for registration signing. For Certificate of Acceptance documents, both the Documentation Author and the Field Technician signatures shall be provided as prerequisite to making the document available for registration signing.

JA7.6.3.2.3 Signer Review and Signature Actions

The Data Registry shall provide functionality for authorized users to select, review and sign compliance documents as a documentation author, field technician, or registration signer.

JA7.6.3.2.3.1 The documentation author can electronically sign a compliance document if it has been verified as complete by the Data Registry.

JA7.6.3.2.3.2 The Field Technician can electronically sign a Certificate of Acceptance document if it has been verified as complete by the Data Registry and has the documentation author's signature.

JA7.6.3.2.3.3 The registration signer can electronically sign a compliance document if it has been verified as complete by the Data Registry and has the documentation author's signature. For Certificate of Acceptance documents both the Documentation Author signature and the Field Technician signature are prerequisite to allowing registration signing.

JA7.6.3.2.3.4 When an authorized user selects to sign a compliance document, the Data Registry provides a display of the compliance document layout that allows the user access to any part of the compliance document for review, as well as a display of the declaration statement.

JA7.6.3.2.3.4.1 All compliance documents shall include a declaration statement applicable to the documentation author signature. The declaration statement language shall be approved by the Commission.

JA7.6.3.2.3.4.2 All Certificate of Acceptance documents shall include a declaration statement applicable to the field technician signature. The declaration statement language shall be approved by the Commission.

JA7.6.3.2.3.4.3 All compliance documents shall include a declaration statement applicable to the registration signer signature. The declaration statement language shall be approved by the Commission.

JA7.6.3.2.3.4.4 All compliance document layouts displayed shall conform to the same format, informational order, and content approved by the Commission. Guidance for data and layout specifications shall be published in the Data Registry requirements manual.

JA7.6.3.2.3.5 When the documentation author activates the signing control to sign the compliance document, the Data Registry shall display the completed documentation author signature block including the documentation author's electronic signature utilizing the visible image of his or her hand written signature, applicable professional qualifications, licenses and/or certificates the documentation author holds, and the date and time the document was signed.

JA7.6.3.2.3.6 When the Field Technician activates the signing control to sign the Certificate of Acceptance document, the Data Registry shall display the completed field technician's signature block including the Field Technician's electronic signature utilizing the visible image of his or her hand written signature, applicable professional qualifications, licenses and/or certificates the Field Technician holds, and the date and time the document was signed.

JA7.6.3.2.3.7 When the registration signer activates the signing control to register the compliance document, the Data Registry shall display the completed signature block including the registration signer's electronic signature utilizing the visible image of his or her hand written signature, applicable professional qualifications, licenses or certificates the registration signer holds, the date and time the document was signed, with the newly generated registration number appended to the footer of each of the pages of the document. The registration numbering convention shall conform to the requirements given Reference Joint Appendix JA7.5.4.

JA7.6.3.2.4 Digital Signatures

The Data Registry shall apply the Registration Provider digital signature to compliance documents electronically signed by the registration signer and then append the Registration Provider's digital certificate containing their public key, when concluding the document registration procedure in the Data Registry.

JA7.6.3.2.4.1 When a compliance document is electronically signed by the registration signer, the Data Registry shall apply a visible indication of the Registration Provider's digital signature to the document which shall include the following statement: "This digital signature is provided in order

to secure the content of this registered document, and in no way implies Registration Provider responsibility for the accuracy of the information".

JA7.6.3.2.4.1.1 The Data Registry digital signature software generates a hash number from the contents of the registered compliance document to create the message digest part of the digital signature.

JA7.6.3.2.4.1.2 The Data Registry digital signature software encrypts the message digest using the Registration Provider's digital signature private key to produce the digital signature.

JA7.6.3.2.4.1.3 The Data Registry digital signature software attaches the Registration Provider's digital certificate which contains their digital signature public key to the compliance document, displays the Registration Provider name and logo on each page of the document, and the digital signature's date and time stamp in the footer of each page of the compliance document.

JA7.6.3.2.5 Transmittal to Commission Compliance Document Repository

The Data Registry, upon completion of the registration procedure, shall immediately and automatically transmit a copy of the completed registered compliance document to the Commission Compliance Document Repository which will process the Registration Provider's digital signature using the Registration Provider's digital certificate to verify the sender and the compliance document contents.

JA7.6.3.2.5.1 The Data Registry shall transmit the digitally signed and registered compliance document to the Commission document repository using a secure transmission protocol. Detailed guidance for the secure transmission protocol may be specified in the Data Registry Requirements Manual.

JA7.6.3.2.6 Document Retention

The Registration Provider shall retain a copy of the completed registered compliance document and make the document available for use by authorized users of the registry who may print a hard copy, or access an electronic copy of the registered document and may subsequently process the Registration Provider's digital signature using their digital certificate to verify the sender and the compliance document contents.

JA7.6.3.2.6.1 The Data Registry shall provide users the functionality to either view registered documents in their web browser or save the document file to their desktop.

JA7.6.3.2.6.2 The Data Registry shall provide functionality to transmit registered compliance documents to authorized requesters.

JA7.6.3.2.6.3 The Data Registry shall make their digital signature public key available for all types of authorized access to these registered documents.

JA7.6.3.2.7 Receive and Process Output From Compliance Software or Other Software Tools

The Data Registry shall process the Compliance Registration Package transmitted from compliance software tools or other software tools approved by the Commission for use in compliance document registration processes.

JA7.6.3.2.7.1 The Data Registry shall have functionality to receive data containing electronic documents and data exported from compliance software tools or other software tools approved by the Commission. When data is received using a password protected encrypted file, the file password shall be made available to the Data Registry by the software vendor in a separate secure communication. Additional guidance may be provided in the Data Registry Requirements Manual. The passwords for encrypted data files shall not be made available to the software users or the Data Registry authorized users, or others who do not have the authority to administer the security measures for the compliance software or the registries.

There may be alternate means by which Compliance Software tools or other software tools approved by the Commission could communicate with Data Registries such as by a Web Service application that may

not use encrypted data files, but rather data streaming. Use of such alternate means shall not be allowed unless approved by the Commission.

JA7.6.3.2.7.2 The Data Registry shall have functionality to decrypt data files it receives that contain completed compliance documents exported from compliance software tools or other software tools approved by the Commission using the password provided by the software vendor. If the password successfully decrypts the file, the Data Registry shall add the compliance document to the registry. Additional guidance describing methods for decrypting data files will be given in the Data Registry Requirements Manual. If the password fails to decrypt the transmitted file, the Data Registry shall display an error message to that effect, and flag any other applicable corrective actions as may be described in the Data Registry Requirements Manual.

JA7.6.3.2.7.3 The Data Registry shall only allow the transmission of data between compliance software tools or other software tools approved by the Commission using secure data transfer protocols. Detailed guidance for secure data transfer protocols may be given in the Data Registry Requirements Manual.

JA7.7 Data Exchange Requirements

Compliance documents are based on standardized data structures that define the content and layout contained for the standard reports that are required by the Administrative Regulations (Title 24, Part 1, §10-103). These data structures will be represented using XML, a well established public data exchange standard developed by the World Wide Web Consortium. All software that generates data used for producing compliance documents, including Data Registries that provide software interfaces for both keyed data entry or data transmission from external systems, will be required to use this technology. Specifically, the data that represents the content in compliance documents will be expressed as XML data which is validated against an XML schema that shall be approved by the Energy Commission. The XML schema will standardize the organization of the data and the terminology and data types, which will strengthen data integrity and provide built-in data validation. As an industry standard for data exchange, using XML technology will take advantage of support from numerous XML read and write software tools that are available in all major development environments.

The compliance document images rendered from the data in the XML document shall be consistent with the informational content and graphical layout formatting for the compliance documents approved by the Commission.

Detailed Guidance for use of the data definitions defined in the XML schema, and data formats used to render each of the registered compliance documents utilized for data exchange procedures for the compliance documents shall be provided in the Data Registry Requirements Manual. Consideration shall be given to use of two complimentary XML technologies, Extensible Stylesheet Language Transformation (XSLT) and Extensible Stylesheet Language Formatting Objects (XSL-FO) which would work directly with the data in the Compliance Data Exchange File to transform the data into the required graphical layout for the compliance document.

Data registries shall provide web-based services to authorized users to enable data exchange between the Data Registry and the authorized user's computer system(s).

Data exchange transactions used for Data Registry document registration processes shall be transactions that utilize technology or software that has been approved by the Commission in accordance with Section JA7.8 or JA7.9 as applicable. Use of technology or software that has not been approved by the Commission shall not be allowed.

JA7.7.1 Data Exchange Requirements for Document Registration

JA7.7.1.1 Keyed-in Data Entry

Data Registries shall have the capability to receive data input transmitted from an authorized user's computer system keyboard entry devices and pointing devices when the authorized user has logged on to the Data Registry web service.

JA7.7.1.2 Imports from Software Tools External to a Data Registry

For document registration procedures that require electronic data or image files be transmitted to a Data Registry, the electronic data or image file transmittals shall conform to the data exchange requirements specified by Section JA7.7.

Any software tool that utilizes data transmission to a Data Registry for purposes of document registration in a Data Registry shall be a Compliance Software tool approved by the Commission pursuant to all applicable requirements in Title 24 Part 1, Section 10-109, or shall be approved for use in accordance with all applicable requirements in Section JA7.9.

JA7.7.1.3 Image File Format for Document Registration

Image files transmitted to a Data Registry from a compliance report generator as part of document registration procedures shall be non-editable "flat" image files in pdf format. Registered document images produced by a Data Registry shall be non-editable "flat" image files in pdf format. The pdf image shall not be recreated from data every time a user wishes to view the registered document. The image shall be generated only once, and stored as a "non-editable" image file.

JA7.7.1.4 Export to Commission Compliance Document Repository

Contingent upon approval of a document repository by the Commission, upon conclusion of the registration of a document, the Data Registry shall immediately and automatically export a copy of the registered compliance document to the Commission Document Repository. The export shall conform to the specifications for data exchange described in JA7.7 and consist of an XML file which is validated against an XML schema. The xml schema shall be approved by the Energy Commission. Detailed guidance for data and document exports to the document repository may be included in the Data Registry Requirements Manual.

Exports to the Commission Compliance Document Repository shall contain the data represented on the registered compliance document, and the Registration Provider's digitally signed image file that represents the completed registered compliance document.

JA7.7.1.5 Electronic Copies of Registered Compliance Documents for Submittals

Registered document files retained by a Data Registry shall be made available to authorized users of the Data Registry for download for use for electronic submittals. These electronic copies of the registered compliance documents shall have the Registration Provider's digital signature which provides for automatic electronic verification of the authenticity of the document. Refer to Section JA7.5.5 for more information about automatic verification of document authenticity using digital certificates.

JA7.8 Data Registry Approval

This section explains the requirements for approval of Data Registries that provide services to authorized users for creating and registering documents required for compliance with Part 6.

The Commission shall perform acceptance testing of Data Registries when a Registration Provider applicant submits an application in order to determine if the requirements in Reference Joint Appendix JA7 have been met.

Detailed guidance for approval of data registries may be provided in the Data Registry Requirements Manual.

JA7.8.1 Overview

The approval procedure requires self-testing and self-certification by the Registration Provider applicant. The Registration Provider applicant shall conduct the specified tests, evaluate the results and certify in writing that the Data Registry passes the tests. The Commission shall perform spot checks and may require additional tests to verify that the proposed Data Registry is suitable for use for providing the compliance document registration functionality required by the Standards. The Registration Provider shall develop a user manual or online help screens that explain how to perform the document registration procedures offered by the Data Registry. The user manual or online help screens shall be reviewed by the Commission for accuracy and ease of use.

JA7.8.2 Application Checklist

Application for approval shall conform to all applicable requirements given in Standards Section 10-109. The following is a list of the items that shall be included in an application package:

JA7.8.2.1 Registration Provider Applicant Certification Statement.

A statement from the Registration Provider applicant certifying the reliability and accuracy of the Data Registry when used for registration of Compliance Documents in accordance with the requirements of Standards Section 10-103(a), Reference Joint Appendix JA7, and may reference the guidance given in the Data Registry Requirements Manual.

The template for the Registration Provider Certification Statement document may be published in the Data Registry Requirements Manual, and electronic versions of the Registration Provider Certification Statement template shall be made available to Registration Provider applicant upon request.

JA7.8.2.2 Compliance Document Registration Test Results.

Electronic copies of the results of the data exchange verification tests, and electronic copies of the registered documents that result from the document registration tests shall be provided. Detailed guidance to assist the applicant in performing and reporting the standardized tests may be given in the Data Registry Requirements Manual.

JA7.8.2.3 User Manual

A copy of the user manual for the Data Registry shall be provided in an electronic format that can be utilized by word processing software. Help screens from the Data Registry user interface, organized into an electronic document file with a table of contents is an acceptable alternative to the requirement for a user manual.

JA7.8.2.4 Data Registry Authorized User Account Access.

User name and password information shall be provided to allow access to the Data Registry for Commission staff to perform verification of Data Registry functionality.

The Registration Provider's digital signature public key shall be provided in order that their digital signature on registered documents can be tested.

JA7.8.2.5 Application Fee and Other Administrative Requirements

Refer to Standards Section 10-109 for required application fees and additional administrative requirements applicable to approval of data registries.

JA7.8.3 Types of Approval

There are two Data Registry approval procedures: full approval, and amendment to full approval. Full approval is required for all Data Registry changes unless they qualify for the amendment to full approval procedure.

JA7.8.3.1 Full Approval

Full approval is required when an applicant Data Registry service has not previously been approved by the Commission. Additionally, the Commission may require that all Data Registries conform to the requirements of a full approval procedure when the Standards are updated (re-approval), or whenever substantial changes are made to a Data Registry's functionality, security, or technology features. When Data Registry re-approval is mandated by the Commission, all Registration Providers shall be notified of the re-approval timetable. A revised Data Registry Requirements Manual may be published to provide guidance for the re-approval process.

Full approval shall ensure the Data Registry conforms to all applicable requirements for functionality and security in JA7 including but not limited to:

(a) Capability to produce and manage registered documents (JA7.5).

(b) Electronic signature capability, and manage authorization of users (JA7.6.3.2.1).

(c) Document data validation (JA7.6.3.2.2).

(d) Signer review and signature actions (JA7.6.3.2.3).

(e) Digital signature and digital certificate actions (JA7.6.3.2.4).

(f) Capability to transmit secured documents and data to the Commission Compliance Document Repository (JA7.6.3.2.5).

(g) Document retention capability (JA7.6.3.2.6).

(h) Capability to receive and process secured output files from compliance software and other software tools approved for use for registering compliance documents (JA7.6.3.2.7).

(i) Capability for data exchange with compliance report generation services approved by the Commission to generate formatted electronic documents (JA7.7).

Detailed guidance to assist with approval procedures may be given in the Data Registry Requirements Manual.

JA7.8.3.2 Amendments

Certain types of changes to Data Registry software applications may be made through a streamlined amendment process. Changes that qualify for amendment approval are changes for which there are minor changes to the document registration procedures, data input requirements, or registered documentation output for the Data Registry. When Data Registry modifications qualify for amendment approval, the following procedure shall be followed:

(a) The Registration Provider applicant shall notify the Commission in writing to provide a description of the change and the reason for making the change.

(b) The Registration Provider applicant shall prepare an addendum to the user manual describing the change to the Data Registry if applicable.

(c) The Commission shall respond to the Registration Provider applicant within 45 days. The Commission response to the applicant may:

1. approve the modification;
2. request additional information;
3. refuse to approve the modification;
4. require the Registration Provider to submit results of additional acceptance tests applicable to the modification; or
5. require that the Registration Provider make specific changes to either the User Manual addendum or the Data Registry functionality.

The Registration Provider shall submit results of any required validation tests applicable to the modification. It is not necessary to resubmit Data Registry test results previously submitted that remain valid.

Any amendment to an existing Data Registry approval shall be accompanied by a cover letter explaining the type of amendment requested, and copies of any other applicable documents that are required. All items on the application checklist shall be submitted, when applicable. The timetable for approval of amendments is the same as for full approval.

(d) With Commission approval, the Registration Provider may make the modified Data Registry available for use for registration of compliance documentation, along with the modified user manual or addendum to the user manual, and shall notify authorized users of the Data Registry.

JA7.8.4 Rescinding Approval (Deactivation) of Data Registries

The Commission may rescind approval of Data Registries through various means.

JA7.8.4.1 Procedures that Initiate Deactivation

(a) All Data Registries are deactivated when the Standards undergo substantial changes, usually occurring with each Standards update. However, the Data Registry shall remain approved to provide document registration for projects that have been permitted under the prior versions of the Standards.

(b) Any Data Registry can be deactivated by a letter from the Registration Provider requesting that the Data Registry be deactivated. The deactivation request shall briefly describe the reasons that justify the need for deactivation.

(c) Any "initiating party" may commence a procedure to deactivate a Data Registry according to the steps outlined below. The intent is to provide a means whereby serious Data Registry errors, flawed numeric results, improper registered document output not discovered in the Data Registry approval process can be verified, and a corrective course of action determined. In this process, there is ample opportunity for the Commission, the Registration Provider, and all interested parties to evaluate any alleged errors in the Data Registry functionality.

JA7.8.4.2 Challenging a Data Registry and Initiating Deactivation

A description of the process for challenging a Data Registry or initiating a deactivation procedure follows:

(a) Any party may initiate a review of a Data Registry approval by sending a written communication to the Commission's Executive Director. (The Commission may be the initiating party for this type of review by noticing the availability of the same information listed here.) The initiating party shall:

1. State the name of the Data Registry that contains the alleged errors;
2. Identify concisely the nature of the alleged errors in the Data Registry that require review;

3. Explain why the alleged errors are serious enough in their effect on document registration compliance to justify a deactivation procedure; and

4. Include appropriate data electronically (in a format agreed to by the Commission staff) and/or information sufficient to evaluate the alleged errors.

(b) The Executive Director shall make a copy or copies of the initial written communication available to the Registration Provider and interested parties within 30 days. Comments from interested parties shall be received within 60 days of the acceptance of the original application.

(c) Within 75 days of receipt of the written communication, the Executive Director may request any additional information needed to evaluate the alleged Data Registry errors from the party who initiated the deactivation review process. If the additional information is incomplete, this procedure will be delayed until the initiating party submits complete information.

(d) Within 75 days of receipt of the initial written communication, the Executive Director may convene a workshop to gather additional information from the initiating party, the Registration Provider and interested parties. All parties will have 15 days after the workshop to submit additional information regarding the alleged program errors.

(e) Within 90 days after the Executive Director receives the application or within 30 days after receipt of complete additional information requested of the initiating party, whichever is later, the Executive Director shall either:

1. Determine that the Data Registry need not be deactivated; or

2. Submit to the Commission a written recommendation that the Data Registry be deactivated.

(f) If the Commission approves the Data Registry deactivation, it shall take effect 60 days later. During the first 30 days of the 60 day period, the Executive Director shall send out a Notice to Enforcement Agencies and Interested Parties announcing the deactivation.

JA7.8.4.3 Burden of Proof

All initiating parties have the burden of proof to establish that the review of alleged Data Registry errors should be granted. The deactivation process may be terminated at any time by mutual written consent of the initiating party and the Executive Director.

The Registration Provider may use the 180 to 210-day period outlined here to update the Data Registry, get it re-approved by the Commission, and make available for use by authorized users, the revised version of the Data Registry that does not contain the errors initially brought to the attention of the Commission.

JA7.8.5 Data Registry User Manual

Each Registration Provider is required to publish a Data Registry User Manual. This requirement may be met with help screens incorporated into the Data Registry user interface, however, a printed version which includes all help screen items must be submitted with the application. The Data Registry User Manual provides guidance for building permit applicants and enforcement agency officials to enable correct use of the Data Registry, and assists with preparation of registered documentation used for submittals to enforcement agencies and other parties to the construction project.

The Document Registration Manual shall describe the specific Data Registry procedures for completing registered compliance documents. The manual shall provide instructions for preparing the data input and utilizing the registered documents for submittals. An example of a full set of compliance documents for a building project shall be included.

Data Registry User Manuals shall be written in a clear and concise manner and with an organization and format that will allow users to quickly locate the topic and understand the instructions. Also, Registration Providers shall make electronic copies of their user manual available from their Data Registry website to all building departments in California.

The following sections describe the information that shall be included in all Data Registry User Manuals. It also presents the required organization for that information.

JA7.8.5.1 Energy Commission Approval

This section includes a copy of the official Energy Commission notice of approval of the Data Registry. It shall include the date of approval, and may include an expiration date for approval as well. The Energy Commission will provide this notice upon completion of evaluation and approval of the Data Registry service.

JA7.8.5.2 Data Registry Capabilities

This section shall discuss the Data Registry capabilities, providing explanation of how to access these capabilities, and the purpose for each of these features. Reference may be made to sections of the Data Registry Users Manual for more complete description.

JA7.8.5.3 Preparing Basic Documents

This section shall cover the basic use of the Data Registries to prepare each of the basic Compliance Document types. Reference may be made to the users' manual, but this section should include a complete summary of all document creation methods or commands necessary to complete the required registered documents.

JA7.8.5.4 Instruction for Submittal of the Registered Document(s)

This section shall contain instruction for completing submittals of completed registered documents to enforcement agencies or other persons who require copies of completed registered documents. Instruction shall be given for all methods of submittal the Data Registry supports, including various methods for submittal of electronic copies of the registered documents, as well as for printing of paper copies

JA7.8.5.5 Sample Compliance Documentation

This section shall include an example of a complete set of compliance documentation for a sample building. The building need not be overly complex, nor need it include every document type possible. The example should, however, include example documentation for all Compliance document types that would normally be submitted for any occupancy types administered by the Data Registry.

JA7.9 Approval of Software Used for Data Input to Data Registries

This section explains the requirements for approval of software used for data input to data registries for creating and registering documents required for compliance with Part 6.

The Commission shall perform acceptance testing of software when a software vendor applicant submits an application in order to determine if the applicable requirements in Reference Joint Appendix JA7 have been met.

Detailed guidance for approval of software may be provided in the Data Registry Requirements Manual.

Note: JA7.9 does not apply to approval of compliance software used for the performance method for demonstrating compliance with Part 6.

JA7.9.1 Overview

The approval procedure requires self-testing and self-certification by the software vendor applicant. The software vendor applicant shall conduct the specified tests, evaluate the results and certify in writing that the software passes the tests. The Commission shall perform spot checks and may require additional tests to verify

that the proposed software is suitable for use for providing the data input for completion of the compliance documents as required by the Standards. The software vendor shall develop a user manual or online help screens that explain how to perform the data input procedures offered by the software. The user manual or online help screens shall be reviewed by the Commission for accuracy and ease of use.

JA7.9.2 Application Checklist

Application for approval shall conform to all applicable requirements given in Standards Section 10-109. The following is a list of the items that shall be included in an application package:

JA7.9.2.1 Software Vendor Applicant Certification Statement.

A statement from the software vendor applicant certifying the reliability and accuracy of the software when used for data input to Data Registries for creating and registering compliance documents in accordance with the requirements of Reference Joint Appendix JA7, and may reference the guidance given in the Data Registry Requirements Manual.

The template for the Software Vendor Certification Statement document may be published in the Data Registry Requirements Manual, and electronic versions of the Software Vendor Certification Statement template shall be made available to Software Vendor applicant upon request.

JA7.9.2.2 Compliance Document Registration Test Results.

Electronic copies of the results of the data exchange verification tests, and electronic copies of the registered documents that result from the compliance report generator tests shall be provided.

Detailed guidance to assist the applicant in performing and reporting the standardized tests may be given in the Data Registry Requirements Manual.

JA7.9.2.3 User Manual

A copy of the user manual for the software shall be provided in an electronic format that can be utilized by word processing software. Help screens from the software user interface, organized into an electronic document file with a table of contents is an acceptable alternative to the requirement for a user manual.

JA7.9.2.4 Application Fee and Other Administrative Requirements

Refer to Standards Section 10-109 for required application fees and additional administrative requirements applicable to approval of software used with data registries.

JA7.9.3 Types of Approval

There are two software approval procedures: full approval, and amendment to full approval. Full approval is required for all software changes unless they qualify for the amendment to full approval procedure.

JA7.9.3.1 Full Approval

Full approval is required when an applicant software service has not previously been approved by the Commission. Additionally, the Commission may require that all approved data input software tools conform to the requirements of a full approval procedure when the Standards are updated (re-approval), or whenever substantial changes are made to a software's functionality, security, or technology features. When software re-approval is mandated by the Commission, all software vendors shall be notified of the re-approval timetable. A revised Data Registry Requirements Manual may be published to provide guidance for the re-approval process.

Full approval shall ensure the software conforms to all applicable requirements for functionality and security in JA7 including but not limited to:

(a) Document data validation (JA7.6.3.2.2)

(b) Capability for data exchange with compliance report generation services approved by the Commission to generate formatted electronic documents (JA7.7),

Detailed guidance to assist with approval procedures may be given in the Data Registry Requirements Manual.

JA7.9.3.2 Amendments

Certain types of changes to software applications may be made through a streamlined amendment process. Changes that qualify for amendment approval are changes for which there are minor changes to the document registration procedures, data input requirements, or documentation output for the software. When software modifications qualify for amendment approval, the following procedure shall be followed:

(a) The software vendor applicant shall notify the Commission in writing to provide a description of the change and the reason for making the change.

(b) The software vendor applicant shall prepare an addendum to the user manual describing the change to the software if applicable.

(c) The Commission shall respond to the software vendor applicant within 45 days. The Commission response to the applicant may:

1. approve the modification;
2. request additional information;
3. refuse to approve the modification;
4. require the software vendor to submit results of additional acceptance tests applicable to the modification; or
5. require that the software vendor make specific changes to either the User Manual addendum or the software functionality.

The software vendor shall submit results of any required validation tests applicable to the modification. It is not necessary to resubmit software test results previously submitted that remain valid.

Any amendment to an existing software approval shall be accompanied by a cover letter explaining the type of amendment requested, and copies of any other applicable documents that are required. All items on the application checklist shall be submitted, when applicable. The timetable for approval of amendments is the same as for full approval.

(d) With Commission approval, the software vendor may make the modified software available for use for registration of compliance documentation, along with the modified user manual or addendum to the user manual, and shall notify authorized users of the software.

JA7.9.4 Rescinding Approval (Deactivation) of Software

The Commission may rescind approval of software through various means.

JA7.9.4.1 Procedures that Initiate Deactivation

(a) All software is deactivated when the Standards undergo substantial changes, usually occurring with each Standards update. However, the software shall remain approved to provide data input to Data Registries for creating and registering compliance documents for projects that have been permitted under the prior versions of the Standards.

(b) Any software can be deactivated by a letter from the software vendor requesting that the software be deactivated. The deactivation request shall briefly describe the reasons that justify the need for deactivation.

(c) Any "initiating party" may commence a procedure to deactivate a software tool according to the steps outlined below. The intent is to provide a means whereby serious software errors, flawed numeric results, improper document output not discovered in the software approval process can be verified, and

a corrective course of action determined. In this process, there is ample opportunity for the Commission, the software vendor, and all interested parties to evaluate any alleged errors in the software functionality.

JA7.9.4.2 Challenging a Software Tool and Initiating Deactivation

A description of the process for challenging a software tool or initiating a deactivation procedure follows:

(a) Any party may initiate a review of a software tool approval by sending a written communication to the Commission's Executive Director. (The Commission may be the initiating party for this type of review by noticing the availability of the same information listed here.) The initiating party shall:

1. State the name of the software that contains the alleged errors;
2. Identify concisely the nature of the alleged errors in the software that require review;
3. Explain why the alleged errors are serious enough in their effect on document registration compliance to justify a deactivation procedure; and
4. Include appropriate data electronically (in a format agreed to by the Commission staff) and/or information sufficient to evaluate the alleged errors.

(b) The Executive Director shall make a copy or copies of the initial written communication available to the software vendor and interested parties within 30 days. Comments from interested parties shall be received within 60 days of the acceptance of the original application.

(c) Within 75 days of receipt of the written communication, the Executive Director may request any additional information needed to evaluate the alleged software errors from the party who initiated the deactivation review process. If the additional information is incomplete, this procedure will be delayed until the initiating party submits complete information.

(d) Within 75 days of receipt of the initial written communication, the Executive Director may convene a workshop to gather additional information from the initiating party, the software vendor and interested parties. All parties will have 15 days after the workshop to submit additional information regarding the alleged program errors.

(e) Within 90 days after the Executive Director receives the application or within 30 days after receipt of complete additional information requested of the initiating party, whichever is later, the Executive Director shall either:

1. Determine that the software need not be deactivated; or
2. Submit to the Commission a written recommendation that the software be deactivated.

(f) If the Commission approves the software deactivation, it shall take effect 60 days later. During the first 30 days of the 60 day period, the Executive Director shall send out a Notice to Data Registries, Enforcement Agencies, and other Interested Parties announcing the deactivation.

JA7.9.4.3 Burden of Proof

All initiating parties have the burden of proof to establish that the review of alleged software errors should be granted. The deactivation process may be terminated at any time by mutual written consent of the initiating party and the Executive Director.

The software vendor may use the 180 to 210-day period outlined here to update the software, get it re-approved by the Commission, and make available for use by authorized users, the revised version of the software that does not contain the errors initially brought to the attention of the Commission.

JA7.9.5 Software User Manual

Each software vendor is required to publish a Software User Manual. This requirement may be met with help screens incorporated into the software user interface, however, a printed version which includes all help screen items must be submitted with the application. The Software User Manual provides guidance for building permit applicants and enforcement agency officials to enable correct use of the software, and assists with preparation of registered documentation used for submittals to enforcement agencies and other parties to the construction project.

The Software User Manual shall describe the specific software procedures for completing compliance documents for use for registration. The manual shall provide instructions for preparing the data input and utilizing the completed formatted documents for registration.

Software User Manuals shall be written in a clear and concise manner and with an organization and format that will allow users to quickly locate the topic and understand the instructions. Also, software vendor shall make electronic copies of their user manual available from their Software product website to all building departments in California.

The following sections describe the information that shall be included in all software user manuals. It also presents the required organization for that information.

JA7.9.5.1 Energy Commission Approval

This section includes a copy of the official Energy Commission notice of approval of the software tool. It shall include the date of approval, and may include an expiration date for approval as well. The Energy Commission will provide this notice upon completion of evaluation and approval of the software tool.

JA7.9.5.2 Software Capabilities

This section shall discuss the software capabilities, providing explanation of how to access these capabilities, and the purpose for each of these features.

JA7.9.5.3 Preparing Basic Documents

This section shall cover the basic use of the software to prepare each of the applicable Compliance Document types. Reference may be made to the users' manual, but this section should include a complete summary of all document creation methods or commands necessary to complete the required compliance documents.

JA7.9.5.4 Sample Compliance Documentation

This section shall include an example of the applicable compliance documentation for a sample building. The building need not be overly complex, but the example should, however, include example documentation for all Compliance document types that would normally be submitted for any occupancy types administered by the Data Registry.

JA7.10 Related Publications

The Compliance Supplement should refer users to the following related Energy Commission publications and where to obtain them:

(a) 2013 Building Energy Efficiency Standards (publication number unknown at time of printing)

(b) 2013 Joint Appendices (publication number unknown at time of printing)

(c) 2013 ACM Approval Manual (publication number unknown at time of printing)

(d) 2013 Residential Compliance Manual (publication number unknown at time of printing)

(e) 2013 Nonresidential Compliance Manual (publication number unknown at time of printing)

(f) 2013 Data Registry Requirements Manual (publication number unknown at time of printing)

(g) 2013 ACM Reference Manual (publication number unknown at time of printing)

These publications are available from:

California Energy Commission
Publications Unit
1516 Ninth Street
Sacramento CA 95814
(916) 654-5200

(This page intentionally left blank.)

Joint Appendix JA8

Appendix JA8 – Qualification Requirements for Residential Luminaires Using LED Light Source

To qualify as a residential high efficacy luminaire using Light Emitting Diode (LED) as the light source (as defined in IES LM-80-2008), the LED light engine (as defined in ANSI/IES RP-16-2010) used in the luminaire shall be certified to the Energy Commission according to all of the following requirements, or by a method approved by the Executive Director. If the LED light engine is inseparable from the luminaire (integral LED luminaire) then the entire luminaire shall meet the same requirements. LED light engine(s) and integral LED luminaire(s) are referred to as LED luminaire(s) below.

(a) Shall be manufactured for use in residential applications. LED luminaires not intended for use in residential applications, LED landscape luminaires, and luminaire housings not containing a light engine shall not be certified to the Energy Commission for the purpose of complying with Joint Appendix JA-8.

(b) The efficacy of the integral LED luminaire or LED light engine, when tested in accordance with IES LM-79-2008, shall be equal to or greater than the efficacies contained in TABLE JA-8.

(c) When designed or rated for indoor use shall be capable of providing a nominal Correlated Color Temperature (CCT) that includes at least one point within the range of 2700K to 4000K; when designed or rated for outdoor use shall be capable of providing a nominal CCT that includes at least one point within the range of 2700K to 5000K; with tolerance defined as in ANSI C78-377-2008.

Exception to Section (c): Monochromatic LEDs that are only for decorative purposes

(d) Shall be capable of providing a minimum Color Rendering Index (CRI) of 90.

Exception 1 to Section (d): Monochromatic LEDs that are only for decorative purposes.

Exception 2 to Section (d): LED luminaires used for compliance with the outdoor lighting requirements in Title 24, Part 6, Section 150.0(k)9.

(e) An LED light engine shall be capable of being installed in luminaire housing without using any type of base or socket used for incandescent lamps; it may include a GU-24 or modular quick connect, but shall not include screw base sockets or adaptors of type and size E12 through E39.

(f) An LED lamp, integrated or non-integrated type in accordance with the definition in ANSI/IES RP-16-2010, shall not be certified to the Energy Commission as a high efficacy luminaire or high efficacy light engine, and shall not be classified as a high efficacy luminaire for compliance with Title 24, Part 6 of the CCR.

(g) The integral LED luminaire or LED light engine under test shall be tested in a Underwriters Laboratory (UL) 1598 testing apparatus in a testing laboratory participating in the ISO/IEC 17025, by the National Voluntary Laboratory Accreditation Program (NVLAP) or other laboratory accreditation body operating in accordance with ISO/IEC 17011 and produced under an ongoing inspection program carried out by a Type A inspection body in accordance with ISO/IEC 17020, accredited to ISO/IEC 17020 by an accreditation body operating in accordance with ISO/IEC 17011.

(h) Each integral LED luminaire or LED light engine tested shall produce the same quantity and quality of light. An integral LED luminaire or LED light engine under test producing different Correlated Color Temperature (CCT), Color Rendering Index (CRI), total flux (per linear foot for linear systems) or other quantitative and qualitative differences in light shall be separately tested and separately certified to the Energy Commission.

(j) For determining efficacy, the input wattage of the integral LED luminaire or LED light engine under test shall be determined as follows:

1. For single LED luminaires, use the maximum rated input wattage of the luminaire.
2. When multiple LED light engines are connected to a single power supply, all possible combinations shall be tested to determine the various input wattages and efficacies for the power supply under test. The combination providing the worst case efficacy shall be the system efficacy.
3. LED luminaires, installed on lighting track that is capable of being used with multiple lighting technologies, shall be treated as single LED luminaires in accordance with section (j)1. Lighting track capable of accommodating any non-LED lighting technologies shall not be certified as LED lighting.

(k) For single LED luminaires, maximum rated input wattage, total luminous flux, CCT, and CRI of the integral LED luminaire or LED light engine under test shall be listed on a permanent, pre-printed, factory-installed label on the circuit board, light engine, or luminaire housing.

(l) For LED systems in accordance with section (j)2, all possible wattage combinations, luminous flux, CCT, CRI, and efficacies of each of possible combination of the integral LED luminaire or LED light engine under test shall be listed on a permanent, pre-printed, factory-installed label on the power supply, or published in manufacturer's catalogs.

TABLE JA-8 HIGH EFFICACY QUALIFICATION REQUIRMENTS FOR LUMINAIRES OR LIGHT ENGINES USING LED LIGHT SOURCES

Power Rating per Integral LED Luminaire, or per LED Light Engine Under Test	Minimum Efficacy (Lumens Per Watt)
5 watts or less	30
over 5 watts to 15 watts	45
over 15 watts to 40 watts	60
over 40 watts	90

Joint Appendix JA9

Appendix JA9 – Qualification Requirements for Low Leakage Air-Handling Units

JA9.1 Purpose and Scope

Joint Appendix JA9 provides the qualification requirements for air-handling units to meet the requirements for low leakage air-handling unit compliance credit(s) available in the performance standards set forth in Title 24, Part 6, Sections 150.1(b) and 140.1. Joint Appendix JA9 is applicable to air-handling units intended for installation in ducted forced-air space conditioning systems. Joint Appendix JA9 is applicable to air-handling units that are rated by the manufacturer to move less than 3,000 cfm (1400 L/s) of air.

Air-handling unit equipment types include:

(a) furnaces

(b) heat pumps

(c) air conditioners

Joint Appendix JA9 does not apply to coil boxes, filter boxes, or other duct system components that are not an integral part of the air-handling unit cabinet or enclosure certified by the manufacturer.

Joint Appendix JA9 does not apply to ducts, plenums, or other field-constructed components.

JA9.2 Qualification Requirements

To qualify as a low leakage air-handling unit for use for compliance with applicable performance compliance credits, the air-handling unit shall be certified to the Energy Commission according to the following requirements:

JA9.2.1 Method of Test

The air-handling unit shall be tested in accordance with the requirements given in ASHRAE Standard 193.

JA9.2.2 Testing Laboratory Requirements

The Air-Handling Unit shall be tested in a laboratory that has demonstrated compliance with ISO Standard 17025, General Criteria for the Competence of Testing and Calibration Laboratories, and is accredited for the ASHRAE Standard 193 test methods. The accreditation body shall be a signatory to the International Laboratory Accreditation Cooperation Mutual Recognition Arrangement www.ilac.org.

JA9.2.3 Nominal Air-Handling Unit Airflow

The nominal air-handling unit airflow used for determining the leakage criterion for qualification shall be as follows:

(a) For heating-only systems the nominal air-handling unit airflow shall be 21.7 cfm per kBtu/hr of rated heating output capacity.

(b) For systems that provide space cooling, the nominal air-handling unit airflow shall be 400 cfm per nominal ton of cooling capacity as specified by the manufacturer, or the heating-only value, whichever is greater.

JA9.2.4 Leakage Criterion for Qualification

Allowable leakage for qualification as a Low Leakage Air-Handling Unit shall be equal to or less than 1.4 percent of the nominal air-handling unit airflow determined by Section JA9.2.3.

RESIDENTIAL APPENDICES

Residential Appendix RA1

Appendix RA1 - Special Case Residential Field Verification and Diagnostic Test Protocols

Note: The HVAC Sizing procedures previously assigned to the 2008 version of RA1 have been moved to the 2013 ACM reference manual.

Table of Contents

Appendix RA1 – Special Case Residential Field Verification and Diagnostic Test Protocols 2

RA1.1 Special Case Protocol Approval 3

RA1.1.1 Special Case Refrigerant Charge Verification Protocol Approval 3

RA1.2 Winter Setup for the Standard Charge Measurement Procedure 3

RA1.2.1 Purpose and Scope 3

RA1.2.2 Winter Setup for the Standard Charge Measurement Procedure 4

RA1.2.3 Additional Requirements and Qualifications 4

RA1.1 *Special Case Protocol Approval*

Field verification and diagnostic test protocols other than those described in Reference Residential Appendix RA3 are possible, and when field verification or diagnostic testing measurements can be reliably determined by methods, procedures or instrumentation other than those specified in Reference Residential Appendix RA3, such alternative protocols shall be allowed if approved by the Commission. The Commission may grant such approval after reviewing submittals from the applicant. Special Case Protocols that are approved by the Commission shall be published as an addendum to Reference Residential Appendix RA1.

RA1.1.1 Special Case Refrigerant Charge Verification Protocol Approval

The applicant for a special case refrigerant charge verification protocol shall provide information that specifies:

(a) the required instrumentation,

(b) the instrumentation accuracy,

(c) the parameters measured,

(d) the required calculations,

(e) the target values for system operating parameters for verification of optimum system operation,

(f) the allowable deviations from target values for system operating parameters,

(g) the requirements for reporting system faults.

Manufacturers that elect to utilize a special case protocol for compliance with refrigerant charge verification requirements in the Standards shall certify to the Energy Commission that use of the special case refrigerant charge verification protocol produces equipment performance at a sensible EER at AHRI Standard 210/240 standard rating conditions (80°F indoor dry-bulb, 67°F indoor wet-bulb, and 95°F outdoor dry-bulb) that deviates less than or equal to 5 percent from the sensible EER determined by laboratory testing at the AHRI Standard 210/240 standard rating conditions when the air conditioner is charged with the manufacturer's specified refrigerant charge determined by measurement of the weight of the specified refrigerant charge. The deviations from the manufacturer's target values of system operating parameters, that correspond to the maximum allowable 5 percent deviation in sensible EER shall be determined and reported to the Energy Commission by the manufacturer, and shall be utilized as the required compliance criteria for HERS Rater refrigerant charge verification. Deviations of system operating parameters from the manufacturer's target values for less than 5 percent deviation in sensible EER (tighter tolerances) may be specified by the manufacturer for use by the installing contractor.

Manufacturers using special case refrigerant charge verification protocols shall, upon request, provide comprehensive engineering specification documentation, installation and technical field service documentation, and user instructions documentation to installers and service personnel that utilize the procedure.

RA1.2 *Winter Setup for the Standard Charge Verification Procedure*

RA1.2.1 Purpose and Scope

The purpose of this procedure is to verify that residential split system air conditioners and heat pumps have the required refrigerant charge and that the metering device is working as designed. The procedures only apply to ducted split system central air-cooled air conditioners and ducted split system central air-source heat pumps for which the system manufacturer has specified that this procedure may be used to verify refrigerant charge.

The Standard Charge Verification Procedure (Section RA3.2.2 of the Reference Residential Appendices) calls for the outdoor temperature to be within the manufacturer's specified range. When outdoor temperatures are below 70°F, the setup for the Standard Charge Verification Procedure must be modified in order to achieve the proper system pressure differential needed for the procedure. The Winter Setup for the Standard Charge Verification Procedure (Winter Charge Setup) allows both installers and HERS Raters to utilize the Standard Charge Verification Procedure of RA3.2.2 in the winter. Note that the Weigh-in Charging Procedure specified in Section RA3.2.3 may also be used only by the installer.

The Winter Charge Setup creates the right conditions at the unit being tested for outdoor temperatures above 37°F and below 71°F that allow the system to operate in the same range of pressure differences between the low side pressure and the high side pressure as occurs during warm outdoor temperatures.

The Winter Charge Setup is used only for units equipped with variable metering devices, which include Thermostatic Expansion Valves (TXV) and Electronic Expansion Valves (EXV) for which the manufacturer specifies subcooling as the means for determining the proper charge for the unit, including units equipped with micro-channel heat exchangers. The Winter Charge Setup achieves an appropriate high side - low side pressure differential to conduct the Standard Charge Verification Procedure, by restricting the airflow at the condenser fan outlet through the use of a Condenser Outlet Air Restrictor. Once this pressure differential is achieved, the Variable Metering Device Calculations are conducted in the same way as the variable metering device procedures described in Reference Residential Appendix RA 3.2.2.6.2. All other applicable requirements of Section RA3.2.2 remain the same and must also be completed when using the Winter Charge Setup,

Definition - Condenser Outlet Air Restrictor: A device which restricts the free area of the outlet from the condenser fan to reduce the air flow, but does not interfere with air entering the condenser coil. The amount of restriction shall be adjustable to allow the operator to vary the airflow to achieve the target refrigerant pressure difference.

RA1.2.2 Winter Setup for the Standard Charge Verification Procedure

(a) Install the condenser outlet air restrictor on the outlet from the condenser fan:

Position the restrictor so it does not interfere with the inlet airflow to the condenser.

Start the air conditioner or heat pump in the cooling mode and restrict the outlet until the difference between the high side pressure and the low side pressure is between 160 psi and 220 psi for R-410A refrigerant and 100 to 145 psi for R-22 refrigerant.

160 psi ≤ (P_{high}, – P_{low}) ≤ 220 psi for R-410A refrigerant;
100 psi ≤ (P_{high}, – P_{low}) ≤ 145 psi for R-22 refrigerant

Allow the unit to stabilize for 15 minutes, watching the pressures to make sure the differential achieves and remains within 160 psi ≤ (P_{high}, – P_{low}) ≤ 220 psi for R-410A refrigerant

100 psi ≤ (P_{high}, – P_{low}) ≤ 145 psi for R-22 refrigerant

(b) Follow the test procedures specified in the Reference Residential Appendix, Section RA3.2.2.6.2, Variable Metering Device Calculations to determine compliance.

RA1.2.3 Additional Requirements and Qualifications

The Winter Charge Setup may only be used for equipment for which the air conditioning manufacturer approves the use of the Winter Charge Setup. Refer to the Energy Commissions website for the list of split system air conditioner units approved by the manufacturers to use the Winter Charge Setup. In addition to the requirements of Section RA1.2, manufacturers may issue additional instructions/clarification for the equipment and procedures required to be used to conduct the Winter Charge Setup. These additional instruction/clarifications shall also be available on the Energy Commission website: www.energy.ca.gov/title24/.

Winter Charge Setup may be used for systems that use a target subcooling for refrigerant charge verification, including units equipped with micro-channel heat exchangers where the manufacturer specifies subcooling for measuring refrigerant charge.

Similar to the Standard Charge Verification Procedure for warm weather, the Winter Charge Setup may be used by the Installer and/or the HERS Rater.

The system shall comply with the minimum system airflow requirements specified in Reference Residential Appendix Section RA3.2.2.7.

Similar to the Standard Charge Verification Procedure for warm weather, the Winter Charge Setup requires that the return air dry bulb temperature must be maintained within the manufacturer's specification during the test, as specified in RA3.2.2. Suggestions for methods to accomplish warmer return air are posted on the Energy Commission website at the following link:

www.energy.ca.gov/title24/2008standards/changeout/documents/Refrigerant_Charge_Verification_Protocol.pdf

Similar to the Standard Charge Measurement Procedure for warm weather, the Winter Charge Setup procedure does not relieve the installing contractor from any obligations to follow manufacturers' specifications. The procedures in Section RA1.2 are used to demonstrate compliance with Title 24, Part 6 requirements for refrigerant charge verification.

Residential Appendix RA2

Appendix RA2 – Residential HERS Verification, Testing, and Documentation Procedures

Table of Contents

Appendix RA2 – Residential HERS Verification, Testing, and Documentation Procedures 1
RA2.1 California Home Energy Rating Systems 2
RA2.2 Measures that Require Field Verification and Diagnostic Testing 2
RA2.3 Documentation and Communication Requirements for HERS Verification Compliance 4
RA2.3.1 Documentation Constraints, Registration, and Validation 5
RA2.3.2 Summary of Documentation and Communication Procedures 6
RA2.4 Summary of Responsibilities 7
RA2.4.1 Builder 7
RA2.4.2 HERS Provider and Rater 7
RA2.4.3 Third Party Quality Control Program 8
RA2.4.4 Enforcement Agency 9
RA2.5 Installer Requirements - Certificate of Installation Documentation 9
RA2.5.1 Field Verification, Diagnostic Testing, and Certificate of Installation Registration 10
RA2.6 HERS Procedures – Verification, Testing, and Sampling 10
RA2.6.1 HERS Procedures - General Requirements 10
RA2.6.2 HERS Procedures - Initial Model Field Verification and Diagnostic Testing 11
RA2.6.3 HERS Procedures – Group Sample Field Verification and Diagnostic Testing 11
RA2.6.4 HERS Procedures - Re-sampling, Full Testing and Corrective Action 14
RA2.7 Third Party Quality Control Programs 16
RA2.8 Installer Requirements and HERS Procedures for Alterations 17

RA2.1 *California Home Energy Rating Systems*

Compliance for certain energy efficiency measures, as specified by the Commission, requires field verification and diagnostic testing of dwelling units by a certified Home Energy Rating System (HERS) Rater. The Commission approves HERS Providers, subject to the Commission's HERS regulations, which appear in the California Code of Regulations, Title 20, Division 2, Chapter 4, Article 8, Sections 1670-1675. Approved HERS Providers are authorized to certify HERS Raters and are required to maintain quality control over HERS Rater field verification and diagnostic testing activities.

When the Certificate of Compliance documentation for a dwelling unit indicates that field verification and diagnostic testing of specific energy efficiency measures are required as a condition for complying with Title 24, Part 6, an approved HERS Provider and certified HERS Rater shall be used to conduct the field verification and diagnostic testing according to the applicable procedures in Appendix RA2. HERS Raters shall be considered special inspectors by enforcement agencies and shall demonstrate competence, to the satisfaction of the building official, for the visual inspections and diagnostic testing that they perform. Per California Code of Regulations, Title 20, Division 2, Chapter 4, Article 8, Section 1673(j)(2), "Providers and Raters shall be independent entities from the builder and from the subcontractor installer of energy efficiency improvements field verified or diagnostically tested." An "Independent Entity means having no financial interest in, and not advocating or recommending the use of any product or service as a means of gaining increased business with, firms or persons specified in California Code of Regulations Title 20, Division 2, Chapter 4, Article 8, Sections 1671 and 1673(j)." Third Party Quality Control Programs approved by the Commission may serve some of the functions of HERS Raters for field verification purposes as specified in Section RA2.7.

The remainder of this Appendix RA2 describes the:

(a) Measures that require field verification or diagnostic testing;

(b) Requirements for documentation and communication for HERS verification compliance processes;

(c) Responsibilities assigned to each of the parties involved in the field verification and diagnostic testing process;

(d) Requirements for procedures for installing contractors and Certificate of Installation documentation;

(e) Requirements for HERS Rater field verification and diagnostic testing and documentation procedures;

(f) Requirements for sampling procedures for HERS verification compliance;

(g) Requirements for Third Party Quality Control Programs;

(h) Requirements for HERS verification compliance for alterations to existing dwellings.

RA2.2 *Measures that Require Field Verification and Diagnostic Testing*

Table RA2-1 describes the measures that require installer certification and HERS Rater field verification and diagnostic testing, and identifies the protocol or test procedure in the Reference Residential Appendices that shall be used for completing installer and HERS Rater field verification and diagnostic testing.

Table RA2-1 – Summary of Measures Requiring Field Verification and Diagnostic Testing

Measure Title	Description	Procedure(s)
	Duct Measures	
Duct Sealing	Component Packages require that space conditioning ducts be sealed. If sealed and tested ducts are claimed for compliance, field verification and diagnostic testing is required to verify that approved duct system materials are utilized, and that duct leakage meets the specified criteria.	RA3.1.4.3
Supply Duct Location, Surface Area and R-value	Compliance credit can be taken for improved supply duct location, surface area and R-value. Field verification is required to verify that the duct system was installed according to the design, including location, size and length of ducts, duct insulation R-value and installation of buried ducts.[1] For buried ducts measures, Duct Sealing and High Quality Insulation Installation (QII) is required.	RA3.1.4.1
Verification of ducts located entirely in directly conditioned space, and Low Leakage Ducts in Conditioned Space	When the Standards specify use of the procedures in Section RA3.1.4.3.8 to determine if space conditioning system ducts are located entirely in directly conditioned space, the duct system location shall be verified by diagnostic testing. Compliance credit can be taken for verified duct systems with low air leakage to the outside when measured in accordance with Reference Residential Appendix Section RA3.1.4.3.8. Field Verification for ducts in conditioned space is required. Duct sealing is required.	RA3.1.4.3.8
Low Leakage Air-handling Units	Compliance credit can be taken for installation of a factory sealed air handling unit tested by the manufacturer and certified to the Commission to have met the requirements for a Low Leakage Air-Handling Unit. Field verification of the air handler's model number is required. Duct Sealing is required.	RA3.1.4.3.9
Verification of Return Duct Design	Verification to confirm that the return duct design conform to the criteria given in TABLE 150.0-C or TABLEable 150.0-D.	RA3.1.4.4
Verification of Air Filter Device Design	Verification to confirm that the air filter devices conform to the requirements given in Standards Section 150.0(m)12.	RA3.1.4.5
Verification of Bypass Duct Prohibition	Verification to determine if system is zonally controlled, and confirm that bypass ducts are not used as required by Section 150.1(c)13.	RA3.1.4.6
	Air Conditioning Measures	
Improved Refrigerant Charge	Component Packages require in some climate zones that air-cooled air conditioners and air-source heat pumps be diagnostically tested in the field to verify that the system has the correct refrigerant charge. For the performance method, the Proposed Design is modeled with less efficiency if diagnostic testing and field verification is not performed. The system must also meet the prerequisite minimum System Airflow requirement.	RA3.2 RA1.2
Installation of Charge Indicator Display	Component Packages specify that a Charge Indicator Display can be installed as an alternative to refrigerant charge testing. The existence of a Charge Indicator Display has the same calculated benefit as refrigerant charge testing. Field verification is required.	RA3.4.2
Verified System Airflow	When compliance requires verified system airflow greater than or equal to a specified criterion, field verification and diagnostic testing is required.	RA3.3
Air-handling Unit Fan Efficacy	When compliance requires verified fan efficacy (Watt/cfm) less than or equal to a specified criterion, field verification and diagnostic testing is required.	RA3.3
Verified Energy Efficiency Ratio (EER)	Compliance credit can be taken for increased EER by installation of specific air conditioner or heat pump models. Field verification is required.[2]	RA3.4.3 RA3.4.4.1
Verified Seasonal Energy Efficiency Ratio (SEER)	HERS Rater field verification of the SEER rating is required for some systems.	RA3.4.3 RA3.4.4.1
Maximum Rated Total Cooling Capacity	The calculations for determining Maximum Rated Total Cooling Capacity need not be field verified, but the prerequisites to taking the credit –Minimum Cooling Coil Airflow, duct sealing, and Verified EER/SEER – must be field verified and diagnostically tested.	RA3.1.4.3, RA3.3, RA3.4.3 RA3.4.4.1
Evaporatively Cooled Condensers	Compliance credit can be taken for installation of evaporatively cooled condensers. Field verification of duct leakage is required. Field verification of refrigerant charge is required. Field verification of EER is required.	RA3.1.4.3, RA3.2 RA3.4.3. RA3.4.4.1

Measure Title	Description	Procedure(s)
Ice Storage Air Conditioners	Compliance Credit can be taken for installation of distributed energy storage equipment. Field verification of duct sealing is required. Field verification of refrigerant charge is required.	RA3.1.4.3, RA3.2, RA3.4.3. RA3.4.4.1
	Mechanical Ventilation Measures	
Continuous Whole-Building Mechanical Ventilation Airflow	Measurement of whole-building mechanical ventilation is mandatory for newly constructed buildings.	RA3.7.4.1
Intermittent Whole-Building Mechanical Ventilation Airflow	Measurement of whole-building mechanical ventilation is mandatory for newly constructed buildings.	RA3.7.4.2
	Building Envelope Measures	
Building Envelope Air Leakage	Compliance credit can be taken for reduced building envelope air leakage. Field verification and diagnostic testing is required.	RA3.8
High Quality Insulation Installation (QII)	Compliance Software recognizes standard and improved envelope construction. Compliance credit can be taken for quality installation of insulation. Field verification is required.	RA3.5
Quality Insulation Installation for Spray Polyurethane Foam (SPF) Insulation	A HERS Rater shall verify the installation of SPF insulation whenever R-values other than the default R-value per inch are used for compliance.	RA3.5.6
	Single Family Domestic Hot Water Measures	
Verified Pipe Insulation Credit (PIC-H)	Inspection to verify that all hot water piping in non-recirculating systems is insulated and that corners and tees are fully insulated. No piping should be visible due to insulation voids with the exception of the last segment of piping that penetrate walls and delivers hot water to the sink, appliance, etc.	RA3.6.3.
Verified Parallel Piping (PP-H)	Inspection that requires that the measured length of piping between the water heater and single central manifold does not exceed five feet	RA3.6.4
Verified Compact Hot Water Distribution System (CHWDS-H)	Field verification to insure that the longest pipe run from any use point to the water heater serving that use point does not exceed a maximum length as Specified in RA 3.6.5.	RA3.6.5
Verified Point of USE (POU-H)	Inspection that all hot water fixtures in the dwelling unit, with the exception of the clothes washer, must be located within a restricted length (total piping length) based on pipe diameter from a water heater. To meet this requirement, most houses will require multiple water heaters	RA3.6.6
Demand Recirculation: Manual Control (RDRmc-H)	Inspection to verify that all recirculating hot water piping is insulated and that corners and tees are fully insulated. No piping should be visible due to insulation voids	RA3.6.7
Demand Recirculation: Sensor Control(RDRsc-H)	Inspection to verify that all recirculating hot water piping is insulated and that corners and tees are fully insulated. No piping should be visible due to insulation voids.	RA3.6.8
	Multi Family Domestic Hot Water Heating Measures	
Multiple Recirculation Loop Design for DHW Systems Serving Multiple Dwelling Units	Inspection that a central DHW system serving a building with more than eight dwelling units has at least two recirculation loops, each serving roughly the same number of dwelling units. These recirculation loops may the same water heating equipment or be connected to independent water heating equipment.	RA3.6.9

1. Note: Compliance credit for increased duct insulation R-value (not buried ducts) may be taken without field verification if the R-value is the same throughout the building, and for supply ducts located in crawlspaces and garages where all supply registers are either in the floor or within 2 feet of the floor. These two credits may be taken subject only to enforcement agency inspection.
2. Note: The requirement for verification of a high EER does not apply to equipment rated only with an EER.

RA2.3 *Documentation and Communication Requirements for HERS Verification Compliance*

The building energy compliance features, HERS field verification requirements, and applicable special feature eligibility criteria shall be identified on a Certificate of Compliance that conforms to the requirements in Standards Sections 10-103(a)1 and 10-103(a)2. The builder or subcontractor shall submit all applicable Certificate of Installation documentation in conformance with the requirements in Standards Section 10-103(a)3 and the procedures described in RA2, and shall provide certification that the construction/installation complies with all applicable requirements on the Certificate of Compliance and complies with all applicable field verification and eligibility criteria. Field verification shall be performed by a HERS Rater and documented on applicable Certificate of Verification documentation that conforms to the requirements of Standards Section 10-103(a)5 and the procedures in RA2.

RA2.3.1 Documentation Constraints, Registration, and Verification

The performance compliance method allows for preparation of Certificate of Compliance documentation for multifamily buildings that precludes use of certain HERS verification compliance credits that would otherwise be available for compliance credit as described in Section RA2.3.1.1 below. Document registration is required for all dwelling units that utilize building energy features for which HERS verification is required as introduced in Section RA2.3.1.2 and described in the procedures in subsequent sections of RA2. Verification of electronic documentation is introduced in section RA2.3.1.3 and is applicable to many aspects of the documentation procedures described in subsequent sections of RA2.

RA2.3.1.1 ***Whole-Building Compliance Approach for Multifamily Buildings***

For multi-family buildings, a single Certificate of Compliance may be prepared for the whole building, however *dwelling unit-specific* Certificates of Installation and *dwelling unit-specific* Certificates of Verification shall be required for each individual dwelling unit in the building. Thus, for the whole-building compliance approach in a multifamily building utilizing features that require HERS verification, the required energy compliance documentation for each dwelling unit shall consist of a copy of the whole-building Certificate of Compliance, the applicable *dwelling unit-specific* Certificates of Installation, and the applicable *dwelling unit-specific* Certificates of Verification.

When the whole-building compliance approach is utilized for a multifamily building, some energy efficiency measures that require HERS field verification shall not be used for compliance credit in performance compliance calculations. These measures require *dwelling unit-specific* information input to the compliance software, and *dwelling unit-specific* information that must be shown on the Certificate of Compliance, thus these measures cannot be properly documented using a whole-building Certificate of Compliance (which is not a *dwelling unit-specific* document type). The HERS measures that shall not be utilized for the multifamily whole-building compliance approach are:

(a) Buried Ducts credit

(b) Deeply Buried Ducts credit

(c) Reduced Supply Duct Surface Area credit

(d) Maximum Rated Total Cooling Capacity credit

(e) Building Envelope Sealing credit (blower door test)

All other measures that require HERS field verification and diagnostic testing are allowed for use with the multifamily whole-building compliance approach.

RA2.3.1.2 ***Document Registration***

For all low-rise residential buildings for which compliance requires HERS field verification, all compliance documentation (Certificate of Compliance, Certificate of Installation, and Certificate of Verification) required for the dwelling unit shall be submitted for registration and retention to a HERS Provider data registry. When submittal of documentation to a HERS Provider data registry is required, the completed documents are referred to as registered documents, and the process of completing these documents by submitting information and certification signatures to the HERS Provider data registry is called registration. Refer to Reference Joint

Appendix JA1 for the definitions for HERS Provider data registry, and for registered document. Additional specification for the document registration process is given in Reference Joint Appendix JA7.

RA2.3.1.3 *Verification of Registered Documents*

Printed paper copies or electronic copies of the completed, signed, registered Certificate of Compliance, Certificate of Installation, and Certificate of Verification documentation shall be allowed for use for required submittals to enforcement agencies, subject to verification that the information shown on the submitted document(s) conforms to the information shown on the current revision of the registered document(s) on file in the HERS Provider data registry for the applicable dwelling unit.

The HERS Provider shall make document verification services available via phone, internet, or utilization of digital technologies, to enable enforcement agency officials, builders, installation contractors, HERS Raters, and other authorized users of the HERS Provider data registry to verify that the information shown on submitted documentation is consistent with the information shown on the current revision of the registered document on file in the HERS Provider data registry for the applicable dwelling unit.

RA2.3.2 Summary of Documentation and Communication Procedures

The documentation and communication process for measures that require field verification and diagnostic testing is summarized below. The subsequent sections of this chapter contain additional information and requirements that apply to all situations; however the section on alterations, RA2.8, applies specifically to the differences in the requirements for alterations. Section RA2.7 applies specifically to the differences in the requirements for Third Party Quality Control Programs.

(a) A Certificate of Compliance shall be prepared for each dwelling unit or building that requires a building permit. The Certificate of Compliance information shall be submitted to the HERS Provider data registry, validated, and signed by the documentation author and the building's designer or owner to register the documentation prior to submittal of the Certificate of Compliance to the enforcement agency for approval. The documentation author and the building designer or owner shall submit certification to the HERS Provider data registry electronically.

(b) The builder shall arrange for the services of a certified HERS Rater prior to installation of the measures, so that once the installation is complete the HERS Rater has ample time to complete the field verification and diagnostic testing without delaying final approval of the dwelling unit by the enforcement agency. The Builder shall make available to the HERS Rater a copy of the Certificate of Compliance that was approved/signed by the building designer or owner and submitted to the enforcement agency.

(c) The builder or subcontractor shall install the measure(s) that require field verification and diagnostic testing. When the installation is complete, the builder or subcontractor shall perform diagnostic testing on the installation using the applicable procedures specified in Reference Residential Appendix RA2.5, RA3, and RA1. If testing confirms compliance, the builder or subcontractor shall submit the required information and signatures electronically to the HERS Provider data registry to register the applicable Certificate(s) of Installation, then post a copy of the applicable registered Certificate(s) of Installation at the building site for review by the enforcement agency in conjunction with requests for final inspection for each dwelling unit.

(d) The HERS Rater shall confirm that registration of the Certificate(s) of Compliance and the applicable Certificate(s) of Installation has been completed for each dwelling unit that requires HERS verification. The HERS Rater shall complete the applicable field verification and diagnostic testing as specified in Section RA2.6. The HERS Rater shall submit the required field verification and diagnostic testing information and signatures electronically to the HERS Provider data registry to register the applicable Certificate of Verification documentation.

(e) The HERS Provider shall make available registered copies of the Certificate(s) of Verification to the HERS Rater, builder, enforcement agency and other authorized users of the HERS Provider data registry.

(f) The enforcement agency shall not approve a dwelling unit until the enforcement agency has received the required registered Certificate(s) of Verification, posted at the building site for review in conjunction with requests for final inspection for the dwelling. The HERS Provider shall make document verification services available, to enforcement agencies, builders and contractors, HERS Raters, the Energy Commission, and other authorized users of the HERS Provider data registry. The HERS Provider shall ensure that the content and approval signatures for copies of submitted Certificate(s) of Compliance, Certificate(s) of Installation, and Certificate(s) Verification are retained per Title 20, Division 2, Chapter 4, Article 8, Section 1673(e).

RA2.4 *Summary of Responsibilities*

Section RA2.4 summarizes responsibilities set forth in Appendix RA2 and organizes them by the responsible party. This section is not, however, a complete accounting of the responsibilities of the respective parties.

RA2.4.1 Builder

The builder shall make arrangements for submittal of the Certificate of Compliance information and certification signatures to the HERS Provider data registry for dwelling units with features that require HERS verification. The builder shall make arrangements for the services of a certified HERS Rater prior to installation of the features, so that once the installation is complete the HERS Rater has ample time to complete the field verification and diagnostic testing without delaying final approval of the building permit by the enforcement agency. The Builder shall make available to the HERS Rater a copy of the Certificate of Compliance that was approved/signed by the building designer or owner and submitted to the enforcement agency.

The builder or subcontractor responsible for the installation shall complete and sign all applicable Certificates of Installation to certify that the installation work meets the requirements for compliance credit shown on the Certificate of Compliance and that all applicable field verification and diagnostic test results reported on Certificates of Installation are accurate. The builder or subcontractor shall post a copy of all applicable Certificates of Installation at the construction site for review by the enforcement agency in conjunction with requests for final inspection for each dwelling unit. The builder or subcontractor shall also make available to the HERS Rater copies of all applicable Certificates of Installation.

If the builder utilizes group sampling for HERS verification compliance, the builder, builder's authorized representative, or the HERS Rater shall identify the dwelling units to be included in the sample group for field verification and diagnostic testing. The HERS Rater, with no direction from the installer or builder, shall randomly select one dwelling unit from a sample group for field verification and diagnostic testing upon receiving the builder's or builder representative's request for HERS verification of that group.

The builder shall arrange for copies of all applicable registered Certificates of Verification to be posted at the building site for review by the enforcement agency in conjunction with requests for final inspection for each dwelling unit.

When re-sampling reveals a failure (see Section RA2.6.4), the builder is required to offer at no charge to all building owners for occupied dwelling units in the group to complete field verification, diagnostic testing and corrective action if necessary. Building owners may decline to have field verification and diagnostic testing and corrective action completed for the dwelling unit. The builder shall report the identifying location of any dwelling unit in which the building owner declines field verification and diagnostic testing and corrective action to the HERS Provider. The builder shall take corrective action as required in all unoccupied dwelling units in the group and in occupied dwelling units in the group where building owners have accepted field verification, diagnostic testing and corrective action.

The builder shall leave in the building, for the building owner at occupancy, copies of all compliance, operating, maintenance, and ventilation information specified in applicable sections of Title 24, Part 1, Section 10-103(b).

RA2.4.2 HERS Provider and Rater

The HERS Provider shall maintain a data registry with the capability to receive and store electronic data and image information provided by authorized users of the data registry sufficient to facilitate administration of all

applicable document registration procedures and HERS compliance verification procedures as described in Reference Residential Appendix RA2 and Reference Joint Appendix JA7. Data registry capabilities include a secure web-based interface accessible by authorized users, and the ability to receive and process data transfer files generated by the Title 24 performance compliance software tools or other approved data input software. For sampling purposes, the HERS Provider shall maintain a list of the dwelling units in a group, the features that require Field Verification and Diagnostic Testing, the dwelling units selected for sample testing for each feature and the dwelling units that were not tested, the results of the sample testing, the dwelling units that were tested and verified as a result of re-sampling, and any corrective action taken.

For all dwelling units that require HERS verification for compliance, the HERS Provider shall retain records of all information and approval signatures for completed Certificates of Compliance, Certificates of Installation, and Certificates of Verification for a period of ten years per Title 20, Division 2, Chapter 4, Article 8, Section 1673(e).

The HERS Rater who provides field verification and diagnostic testing shall transmit the required test results and certification signatures to the HERS Provider data registry. Registered Certificates of Verification from the Provider shall be made available for the tested dwelling unit and each of the remaining untested dwelling units from a designated group for which compliance is verified based on the results of a sample test. The registered Certificates of Verification shall be made available to the HERS Rater, the builder, the enforcement agency, and to other authorized users of the HERS Provider data registry.

The HERS Rater shall produce a separate Certificate of Verification for each dwelling unit that meets the requirements for compliance. The registered Certificate of Verification shall have unique HERS Provider-designated identifiers for registration number and sample group number, and shall include lot location or address, building permit number, time and date stamp, Provider logo, water mark or official seal, and indicate if the dwelling unit has been tested or if it was an untested dwelling unit approved as part of sample group. The HERS Rater shall not submit a Certificate of Verification for a dwelling unit that does not have a completed Certificate of Installation submitted by the installer as required in Section RA2.5.

If field verification and diagnostic testing on a sampled dwelling unit identifies a failure to meet the requirements for compliance credit, the HERS Rater shall report to the HERS Provider, the builder, and the enforcement agency that re-sampling will be required.

If re-sampling identifies another failure, the HERS Rater shall report to the HERS Provider, the builder, and the enforcement agency that field verification and diagnostic testing will be required for all the untested dwelling units in the group. The report shall specify the identifying location of all dwelling units that shall be fully tested.

(a) The HERS Provider shall also report to the builder once diagnostic testing and field verification has shown that the failures have been corrected in all of the dwelling units except those for which the building owner has declined field verification, diagnostic testing, and corrective action. When field verification and diagnostic testing confirm that the requirements for compliance have been met, the HERS Provider shall make available the applicable registered Certificate(s) of Verification for each dwelling unit in the group.

The HERS Provider shall file a report with the enforcement agency if there has been a failure on a re-sample within a group, explaining all actions taken (including field verification, testing, corrective actions, offers to building owners for testing and corrective action, and building owner declines of such offers) to bring into compliance dwelling units for which full testing has been required.

RA2.4.3 Third Party Quality Control Program

An approved Third Party Quality Control Program shall:

(a) Provide training to participating program installing contractors, installing technicians, and specialty Third Party Quality Control Program subcontractors regarding compliance requirements for measures for which diagnostic testing and field verification is required,

(b) Collect data from participating installers for each installation completed for compliance credit,

(c) Complete data checking analysis to evaluate the validity and accuracy of the data to independently determine whether compliance has been achieved,

(d) Provide direction to the installer to retest and correct problems when data checking determines that compliance has not been achieved,

(e) Require resubmission of data when retesting and correction is directed, and

(f) Maintain a database of all data submitted by participating program installing contractors, installing technicians, and specialty Third Party Quality Control Program subcontractors, and shall provide functionality that allows Energy Commission staff to query retained data or documents.

The HERS Provider shall arrange for the services of an independent HERS Rater to conduct independent field verifications of the installation work performed by the participating installing contractor and Third Party Quality Control Program, completing all of the responsibilities of a HERS Rater as specified in Appendix RA2 with the exception that sampling shall be completed for a group of up to thirty dwelling units.

RA2.4.4 Enforcement Agency

The enforcement agency at its discretion may require independent testing and field verification to be scheduled so that it can be completed in conjunction with the enforcement agency's required inspections, or observe the field verification and diagnostic testing performed by builders, subcontractors or the certified HERS Rater in conjunction with the enforcement agency's required inspections to corroborate the results documented on the Certificate(s) of Installation and on the Certificate(s) of Verification.

For dwelling units that have used a compliance alternative that requires field verification and diagnostic testing, the enforcement agency shall not approve a dwelling unit until the enforcement agency has received, in accordance with Title 24, Part 1 Section 10-103(a), Section 10-103(d) and the procedures in Appendix RA2, a registered copy of the Certificate of Compliance that has been completed and signed by the person responsible for the design; all applicable registered Certificates of Installation that have been completed and signed by the builder or subcontractor, and all applicable registered Certificates of Verification that have been completed and signed by the HERS Rater in conjunction with requests for final inspection for each dwelling unit. The HERS Provider shall make document verification services available to enforcement agencies, builders and contractors, HERS Raters, the Energy Commission, and other authorized users of the Provider data registry.

If necessary to avoid delay of approval of dwelling units completed when outside temperatures are below 55°F, the enforcement agency may approve compliance with the refrigerant charge verification requirements when installers have used the Weigh-in Charging Method described in Reference Residential Appendix RA3, Section RA3.2.3.1 and have not used the Section RA3.2.3.2 option for HERS verification compliance. This approval will be on the condition that installers submit to the enforcement agency a registered Certificate of Installation that includes a signed declaration indicating agreement to return to correct refrigerant charge if a HERS Rater determines at a later time when the outside temperature is 55°F or above, that correction is necessary. The HERS Provider shall track these projects to ensure a HERS Rater conducts the required refrigerant charge verification for all such systems. When the outdoor temperature is 55°F or above, the HERS Rater shall use the RA3.2.2 standard charge verification procedure, or a procedure approved by the HVAC system manufacturer and Energy Commission for the refrigerant charge verification. The HERS Rater shall report the diagnostic results on the applicable Certificate of Verification, and shall register the certificate with the HERS Provider. When refrigerant charge verification testing performed by the HERS Rater indicates adjustment to the charge is required, the HERS Provider shall notify the installer, and the builder or building owner that corrective action is required. The HERS Provider may also notify the enforcement agency that corrective action is required. All air-cooled air conditioners and air-source heat pumps that utilize the Weigh-In Method shall be verified by a HERS Rater using one of the applicable refrigerant charge verification procedures. Compliance with HERS verification requirements cannot utilize group sampling procedures when the installer utilized the Weigh-In Method.

RA2.5 *Installer Requirements - Certificate of Installation Documentation*

Certificates of Installation are required when dwelling units utilize features, materials, components, or manufactured devices that are required for compliance with the Appliance Efficiency Regulations and Title 24, Part 6. Certificates of Installation shall indicate the installed features, materials, components, or manufactured devices are in conformance with the specifications listed on the Certificate of Compliance for the dwelling. The builder or the installing subcontractor eligible under Division 3 of the Business and Professions Code to accept

responsibility for construction or installation, in the applicable classification for the scope of work, shall sign and submit Certificate of Installation documentation and post a copy of the Certificate(s) at the building site for review by the enforcement agency in conjunction with requests for final inspection for each dwelling unit.

When the dwelling unit does not require HERS field verification for compliance, the Certificates of Installation that are posted in the field for review by the enforcement agency at final inspection are not required to be registered certificates from a HERS Provider data registry, but shall conform to all other applicable requirements of 10-103(a)3. The remainder of Section RA2.5 describes the documentation procedures for Certificates of Installation for dwelling units that require HERS verification.

RA2.5.1 Field Verification, Diagnostic Testing, and Certificate of Installation Registration

For the features, materials, components, or manufactured devices that are listed on the Certificate of Compliance indicating HERS verification is required for compliance, the builder shall arrange for the services of a certified HERS Rater prior to installation of the measures so that once the installation is complete the HERS Rater will have ample time to complete the required field verification and diagnostic testing without delaying final approval of the dwelling unit by the enforcement agency.

For all low-rise residential buildings for which compliance requires HERS field verification and diagnostic testing, the Certificate(s) of Installation shall be signed and submitted to a HERS Provider data registry as specified in Standards Section 10-103(a)3 to certify conformance with Part 6. When Standards Section 10-103(a)3 requires document registration, all Certificates of Installation that are applicable to the dwelling unit shall be registered.

When the installation of a measure is complete, the builder or the builder's subcontractor shall perform all required field verification and diagnostic testing of the installation(s) to confirm compliance with the Standards utilizing the applicable procedures specified in Reference Residential Appendix RA3 or RA1, and submit, or make arrangements for submittal of all required Certificate of Installation information to a HERS Provider data registry. Submittal of Certificate of Installation information to the HERS Provider data registry shall be done electronically.

HERS Raters or other authorized users of the HERS Provider data registry may provide *documentation author* support to facilitate the submittal of the Certificate of Installation information to the HERS Provider data registry on behalf of the builder or the builder's subcontractor when such facilitation has been authorized by the builder or subcontractor. *Documentation authors* shall provide an electronic signature to certify the documentation is accurate and complete. The builder or subcontractor who is eligible under Division 3 of the Business and Professions Code to take responsibility for the construction or installation, or their authorized representative, shall provide an electronic signature to register the Certificate of Installation, to certify the information provided on the Certificate is true and correct, and confirm that the construction or installation complies with the requirements shown on the dwelling unit's Certificate of Compliance that was approved by the enforcement agency. The builder or subcontractor shall make available a copy of the registered Certificate of Installation to the HERS Rater, and post a copy of the registered Certificate of Installation at the building site for review by the enforcement agency in conjunction with requests for final inspection for each dwelling unit.

RA2.6 *HERS Procedures – Verification, Testing, and Sampling*

At the builder's option, HERS field verification and diagnostic testing (HERS verification) shall be completed either for each and every dwelling unit, or alternatively for a dwelling unit sample from a designated group of dwelling units in which the same measure(s) requiring HERS verification is installed in each dwelling unit in the group. If the builder elects to demonstrate compliance utilizing group sampling, all applicable procedures described in Sections RA2.6.2, RA2.6.3, and RA2.6.4 shall be followed.

RA2.6.1 HERS Procedures - General Requirements

The general requirements in RA2.6.1 are applicable to all dwelling units that require HERS verification for compliance, and shall be incorporated into procedures specified in Sections RA2.6.2, RA2.6.3, and RA2.6.4 whenever applicable.

The builder or the builder's authorized representative shall make available to the HERS Rater the names and license numbers of the subcontractors responsible for the installations in the dwelling units that require HERS verification; and a copy of the registered Certificate of Compliance that was signed and submitted by the person responsible for the building design and was approved by the enforcement agency.

The builder, builder's authorized representative, or subcontractor shall make available to the HERS Rater a copy of the applicable registered Certificate(s) of Installation signed and submitted by the builder or subcontractors responsible for the construction or installation as described in Section RA2.5.

Prior to performing field verification and diagnostic testing, the HERS Rater shall verify that registration of all applicable Certificate of Compliance documentation, and registration of all applicable Certificate of Installation documentation has been completed for all dwelling units for which compliance requires HERS verification. The HERS Rater shall confirm the installer's diagnostic test results and all other Certificate of Installation information indicates compliance consistent with the requirements given in the plans and specifications and registered Certificate of Compliance documents approved by the enforcement agency for the dwelling.

The HERS Rater shall perform all applicable field verification and diagnostic testing.

If the HERS Rater's field verification and diagnostic testing determines that the requirements for compliance are met, the HERS Rater shall submit, or make arrangements for submittal of the Certificate of Verification testing information to the HERS Provider data registry.

Authorized users of the HERS Provider data registry that are not certified HERS Raters may provide *documentation author* support to facilitate submittal of the Certificate of Verification information to the HERS Provider data registry on behalf of the HERS Rater when such facilitation has been authorized by the HERS Rater. *Documentation authors* shall provide an electronic signature to certify the documentation is accurate and complete.

The Certificate of Verification shall be signed by the HERS Rater who performed the field verification and diagnostic testing services to certify that the information provided on the Certificate is true and correct.

A completed signed registered copy of the Certificate of Verification shall be posted at the building site for review by the enforcement agency in conjunction with requests for final inspection for each dwelling unit.

The HERS Provider shall make document verification services available, to enforcement agencies, builders and contractors, HERS Raters, the Energy Commission, and other authorized users of the HERS Provider data registry.

RA2.6.2 HERS Procedures - Initial Model Field Verification and Diagnostic Testing

The HERS Rater shall diagnostically test and field verify the first dwelling unit of each model within a subdivision or multifamily housing development when the builder elects to demonstrate HERS verification compliance utilizing group sampling. To be considered the same model, dwelling units shall have the same basic floor plan layout, energy design, and compliance features as shown on the Certificate of Compliance. Variations in the basic floor plan layout, energy design, compliance features, zone floor area, or zone volume, that do not change the HERS features to be tested, the heating or cooling capacity of the HVAC unit(s), or the number of HVAC units specified for the dwelling units, shall not cause dwelling units to be considered a different model. For multi-family buildings, variations in exterior surface areas caused by location of dwelling units within the building shall not cause dwelling units to be considered a different model. This initial model testing allows the builder to identify and correct any potential construction flaws or practices in advance of the build out of each model. If field verification and diagnostic testing determines that the requirements for compliance are met, the HERS Rater shall transmit the test results to the HERS Provider data registry, whereupon the Provider shall make available a registered copy of the Certificate of Verification, to the HERS Rater, the builder, the enforcement agency, and other authorized users of the HERS Provider data registry.

RA2.6.3 HERS Procedures – Group Sample Field Verification and Diagnostic Testing

Descriptions for HERS verification compliance using group sampling, and details describing procedures for sampling of a "closed" group of up to seven dwellings, and for sampling of an "open" group of up to five dwellings are described in Section RA2.6.3.

RA2.6.3.1 *Designation of Groups*

After the initial model field verification and diagnostic testing is completed as specified in RA2.6.2, the builder, or the builder's authorized representative shall determine a sampling procedure to be used, and shall designate the dwelling units to include in the group of dwellings that require HERS verification. The maximum number of dwelling units allowed in a sample group may range from five, to seven, to thirty as described in Sections RA2.6.3.3, RA2.6.3.4, and RA2.7 respectively.

If multiple measures requiring HERS verification are installed, each dwelling unit in a designated group shall have the same measures requiring HERS verification as the other dwelling units in the designated group. If some dwelling units have installed a different set of measures requiring HERS verification, those dwelling units shall be in a separate group.

If the dwelling units in a designated group have multiple measures that require HERS verification, sample testing for individual measures may be conducted in any of the dwelling units in the group - it is not required that all of the sample tests for all of the individual measures be completed in the same dwelling unit. Individual measures shall be allowed to be included in a group regardless of whether compliance requires one sample test, or if compliance requires more than one sample test (up to100% sample test rate) be reported for such individual measures.

Dwelling units in a designated group shall all be located within the same enforcement agency jurisdiction and subdivision or multifamily housing development. Refer also to Section RA2.8 for requirements for sample groups applicable to alterations.

If dwelling units have central forced-air space conditioning equipment that introduces outside air into the conditioned space utilizing means that connect outside air ventilation ducts directly to the dwelling unit's central forced air duct system (Central Fan-Integrated Ventilation System or CFI Ventilation System), the CFI ventilation technology shall be considered a separate measure for HERS verification sampling purposes, and dwellings with CFI ventilation systems shall be placed in separate groups from other dwelling units that do not utilize CFI ventilation technology.

RA2.6.3.2 *Group Status - "Open" Groups and "Closed" Groups*

Submittal of the Certificate of Installation information, for at least one dwelling, to the HERS Provider data registry, is required in order to "open" a new group. Additional dwellings may be entered into the registry, and included in an "open" group over a period of time subject to submittal of the Certificate of Installation information to the registry for each additional dwelling. However the group shall not remain "open" to receive additional dwellings for a period longer than six months from the earliest date shown on any Certificate of Installation for a dwelling included in a group. A group may be "closed" at any time after the group has been "opened" at the option of the builder or builder's authorized representative, thus the size of a "closed" group may range from a minimum of one dwelling to a maximum of seven dwellings. When a group becomes classified as "closed", no additional dwellings shall be added to the group.

RA2.6.3.3 *Sampling of a "Closed" Group of Up to Seven Dwellings*

The following criteria shall be met as prerequisite to attaining HERS verification compliance for the group:

(a) All of the dwelling units contained in the sample group have been identified. A maximum of seven dwellings are allowed to be included in a "closed" sample group for HERS compliance.

(b) Installation of all the measures that require HERS verification has been completed in all the dwellings that are entered in the group, and registration of the Certificates of Installation for all the dwellings entered in the group has been completed.

(c) The group has been classified as a "closed" group in the Provider data registry

(d) At the request of the builder or the builder's authorized representative, a HERS Rater shall randomly select one dwelling unit from the "closed" sample group for field verification and diagnostic testing. If the dwelling unit meets the compliance requirements, this "tested" dwelling and also each of the other "not-tested" dwellings in the group shall receive a registered Certificate of Verification.

RA2.6.3.4 *Sampling of an "Open" Group of Up to Five Dwellings*

The following criteria shall be met as prerequisite to attaining HERS verification compliance for the group:

(a) At least one dwelling unit from the sample group has been identified. A maximum of five dwellings are allowed to be included in an "open" sample group for HERS compliance.

(b) Installation of all the measures that require HERS verification shall be completed in all the dwellings that are entered in the group, and registration of the Certificates of Installation for all the dwellings entered in the group has been completed.

(c) At the request of the builder, or the builder's authorized representative, a HERS Rater shall randomly select one dwelling unit from those currently entered into the "open" sample group for field verification and diagnostic testing. If the dwelling unit meets the compliance requirements, the "tested" dwelling and also each of the other "not tested" dwellings currently entered into the group shall receive a registered Certificate of Verification. If less than five dwelling units have been entered into the group, the group shall be allowed to remain "open" and eligible to receive additional dwelling units. Dwelling units entered into the "open" group subsequent to the compliant HERS verification of the "tested" dwelling shall also receive a registered Certificate of Verification as a "not tested" dwelling subject to receipt of the registered Certificate of Installation by the HERS Provider data registry for the dwelling. The group shall be "closed" when it reaches the limit of five dwellings or when the six month limit for "open" groups has been exceeded, or when the builder requests that the group be closed.

RA2.6.3.5 *Additional Requirements Applicable to Group Sampling Procedures*

The builder or the HERS Rater may request removal of untested dwelling units from a group by notifying the HERS Provider prior to selection of the dwelling sample that will be tested from an "open" or "closed" group and shall provide justification for the change. Removed dwelling units shall be field verified and diagnostically tested individually or shall be included in a subsequent group for sampling.

There are exceptions to the requirement to have completed Certificate of Installation data entered into the HERS Provider data registry prior to selection of the dwelling unit to be tested in a group. Some HERS measures require multiple verifications during the construction process. A sample group is not required to be closed before HERS field verification and diagnostic testing can begin for the following measures. For these measures the HERS Rater is allowed to randomly select the dwelling unit to be field verified from those that are at the proper stage of construction to enable the first of the multiple verifications to be completed.

(a) **Quality Installation of Insulation** measure requires inspection of the air barrier and inspection of the insulation behind tubs and showers at framing rough-in. Verification of the wall, floor and ceiling insulation must be completed prior to drywall installation. Attic insulation installation may require follow-up verification.

(b) **Buried Ducts** measure requires verification of the duct design prior to verification of the attic insulation.

(c) **Duct Surface Area** requires verification of the duct design prior to installation of the attic insulation.

The HERS Rater, with no direction from the installer or builder, shall randomly select one dwelling unit from a "closed" sample group for field verification and diagnostic testing upon receiving the builder's or builder representative's request for HERS verification of that group. Alternatively, the HERS Rater shall randomly select one dwelling unit from the dwellings currently entered into an "open" sample group upon receiving the builder's or builder representative's request for HERS verification of that group. The HERS Rater shall diagnostically test and field verify the selected dwelling unit. The HERS Rater shall enter the test and/or field verification results into the HERS Provider data registry regardless of whether the results indicate a pass or fail. If the test fails, then the failure must be entered into the Provider's data registry even if the installer immediately corrects the problem. In addition, the procedures in Section RA2.6.4 shall be followed.

If field verification and diagnostic testing determines that the requirements for compliance are met, the HERS Rater shall enter the test results into the HERS Provider data registry. Whereupon the Provider shall make available to the HERS Rater, the builder, the enforcement agency, and other approved users of the HERS Provider data registry, a registered copy of the Certificate of Verification for the "tested" dwelling, and for all other "not tested" dwelling units entered in the group at the time of the sample test. The registered Certificate of

Verification shall report the successful diagnostic testing results and conclusions regarding compliance for the tested dwelling unit. The registered Certificate of Verification shall also provide:

(a) Building permit number for the dwelling unit.

(b) Registration Number that conforms to the numbering convention specified in Reference Joint Appendix JA7.

(c) Group Number that conforms to the numbering convention specified in Reference Joint Appendix JA7.

(d) Time and date stamp of the Provider's issuance of the registered Certificate of Verification.

(e) Provider's logo, water mark, or official seal.

(f) Indication that the dwelling was a "tested" dwelling, or was a "not-tested" dwelling in a sample group.

Whenever the builder changes subcontractors who are responsible for a feature that is being diagnostically field verified and tested, the builder shall notify the HERS Rater of the subcontractor change, and terminate sampling for any affected groups. All dwelling units utilizing features that require HERS verification for compliance that were installed by previous subcontractors or were subject to verification and testing under the supervision of a previous HERS Provider, for which the builder does not have a completed Certificate of Verification, shall be individually tested or included in a separate group for sampling. Dwelling units with installations completed by new subcontractors shall be individually tested or shall be included in a new sampling group.

The HERS Rater shall not notify the builder when sample testing will occur prior to the completion of the work that is to be tested, or prior to registration of the Certificate of Installation.

The HERS Provider shall "close" any "open" group within 6 months after the earliest signature date shown on any Certificate of Installation for a dwelling entered in the group. When such group closure occurs, the HERS Provider shall notify the builder that the group has been "closed," and require that a sample dwelling shall be selected for field verification and diagnostic testing by a HERS Rater if field verification has not yet been conducted on a sample dwelling entered in the group.

RA2.6.4 HERS Procedures - Re-sampling, Full Testing and Corrective Action

"Re-sampling" refers to the procedure that requires testing of additional dwellings within a group when the initial selected sample dwelling from a group fails to comply with the HERS verification requirements.

When a failure is encountered during sample testing, the failure shall be entered into the HERS Provider data registry. Corrective action shall be taken on the failed dwelling unit and the dwelling unit shall be retested to verify that corrective action was successful. Corrective action and retesting on the dwelling unit shall be repeated until the testing indicates compliance and the successful compliance results have been entered into the HERS Provider data registry (or the dwelling unit complies using an alternative method). Whereupon, a registered Certificate of Verification for the dwelling shall be made available to the HERS Rater, the builder, the enforcement agency, and other authorized users of the HERS Provider data registry.

In addition, the HERS Rater shall conduct re-sampling to assess whether the first failure in the group is unique, or if the rest of the dwelling units in the group are likely to have similar failings.

RA2.6.4.1 ***Re-sampling procedures for a "closed" group of up to seven dwellings:***

The HERS Rater shall randomly select for re-sampling one of the remaining untested dwelling units in the group for retesting of the feature that failed. If the failed dwelling was entered in a "closed" group, and the testing of the second randomly selected dwelling unit in the group confirms that the requirements for compliance credit are met on that unit, then the dwelling unit with the initial failure shall not be considered an indication of failure in the remaining untested dwelling units in the group. The HERS Rater shall transmit the re-sample test results to the HERS Provider registry, whereupon the Provider shall make available to the HERS Rater, the builder, the enforcement agency, and other authorized users of the HERS Provider data registry, a registered copy of the Certificate of Verification for the remaining dwelling units in the group including the dwelling unit in the re-sample.

If field verification and diagnostic testing of the second sample results in a failure, the HERS Rater shall report the second failure to the HERS Provider, the builder, and the enforcement agency. All dwelling units in the group must thereafter be individually field verified and diagnostically tested to confirm compliance for the feature that failed to comply with re-sampling. In cases where corrective action would require destruction of building components, the builder may choose to reanalyze compliance and choose different measures that will achieve compliance. In this case a new Certificate of Compliance shall be completed and submitted to the HERS Provider, the HERS Rater, and the enforcement agency. Even with a new Certificate of Compliance, the dwelling unit must be individually field verified and diagnostically tested. Upon verification of compliance, the HERS Rater shall enter the test results into the HERS Provider data registry. Whereupon the Provider shall make available to the HERS Rater, the builder, the enforcement agency, and other authorized users of the HERS Provider data registry, a registered copy of the Certificate of Verification for each individual dwelling in the group.

RA2.6.4.2 ***Re-sampling procedures for an "open" group of up to five dwellings:***

The HERS Rater shall randomly select for re-sampling one of the remaining untested dwelling units in the group for retesting of the feature that failed. If the failed dwelling was entered in an "open" group, and there are no other untested dwellings entered in the "open" group at the time of the failed HERS verification, subsequent dwellings entered into the "open" group shall not receive a Certificate of Verification until a second dwelling in the "open" group is tested and successfully complies. If the subsequent testing of the second dwelling unit in the group confirms that the requirements for compliance credit are met on that unit, then the dwelling unit with the initial failure shall not be considered an indication of failure in the untested dwelling units in the group. The HERS Rater shall transmit the compliant re-sample test results to the HERS Provider data registry, whereupon the Provider shall make available to the HERS Rater, the builder, the enforcement agency, and other authorized users of the HERS Provider data registry, a registered copy of the Certificate of Verification, for the re-sampled dwelling, and the remaining not yet tested dwelling units entered in the "open" group at the time of the re-sample test, and the group shall be allowed to remain open and eligible to receive additional dwelling units. Dwelling units entered into the "open" group of up to 5 dwellings following the successful HERS verification of the re-sampled dwelling shall receive a Certificate of Verification as a "not tested" dwelling subject to registration of the Certificate of Installation by the HERS Provider data registry for the dwelling.

If field verification and diagnostic testing of the second sample results in a failure, the HERS Rater shall report the second failure to the HERS Provider, the builder, and the enforcement agency, and the Provider shall require the "open" group to be "closed". All remaining untested dwelling units entered in the group at the time of the re-sample must thereafter be individually field verified and diagnostically tested. In cases where corrective action would require destruction of building components, the builder may choose to reanalyze compliance and choose different measures that will achieve compliance. In this case, a new Certificate of Compliance shall be completed and submitted to the HERS Provider, the HERS Rater, and the enforcement agency. Even with a new Certificate of Compliance, the dwelling unit must be individually field verified and diagnostically tested. Upon verification of compliance, the HERS Rater shall enter the test results into the HERS Provider data registry. Whereupon the Provider shall make available to the HERS Rater, the builder, the enforcement agency, and other authorized users of the HERS Provider data registry, a registered copy of the Certificate of Verification for each individual dwelling in the group.

RA2.6.4.3 ***Corrective Action***

Builders shall offer to provide the necessary field verification and diagnostic testing services and any necessary corrective action at no charge to building owners (for a definition of "building owner" and of other terms used, see Reference Joint Appendix JA1) in occupied dwelling units in the group. Builders shall report to the HERS Provider the identifying location of any dwelling unit in which the building owner or occupant declines field verification and diagnostic testing and corrective action. The HERS Provider shall verify that the builder has made this offer. If a building owner of a dwelling unit declines this offer, field verification, diagnostic testing, and corrective action will not be required for that dwelling unit and the dwelling unit will no longer be considered a part of the group. If a building owner accepts this offer, the builder shall take corrective action, and the HERS Rater shall conduct field verification and diagnostic testing to verify that problems have been corrected. Upon verification of compliance, the HERS Rater shall transmit the test results to the HERS Provider data registry.

Whereupon the Provider shall make available to the HERS Rater, the builder, the enforcement agency, and other authorized users of the HERS Provider data registry, a registered copy of the Certificate of Verification for the dwelling unit.

The HERS Provider shall file a report with the enforcement agency explaining all actions taken (including field verification, diagnostic testing, corrective action, offers to building owners for testing and corrective action, and/or building owner declines of such offers) to bring into compliance dwelling units for which full testing has been required. If corrective action requires work not specifically exempted by the CMC or the CBC, the builder shall obtain a permit from the enforcement agency prior to commencement of any of the work.

Corrections to avoid reporting a failure to the HERS Provider data registry shall not be made to a sampled dwelling unit after the HERS Rater selects the sample dwelling unit. If it is evident that such corrections have been made to a sampled dwelling unit to avoid reporting a failure, field verification and diagnostic testing shall be required for 100 percent of the dwelling units in the group.

RA2.7 *Third Party Quality Control Programs*

The Commission may approve Third Party Quality Control Programs that serve some of the functions of HERS Raters for field verification purposes but do not have the authority to sign compliance documentation as a HERS Rater. Third Party Quality Control Programs shall provide training to installers regarding compliance requirements for measures for which diagnostic testing and field verification is required. Third Party Quality Control Programs shall collect data from participating installers for each installation completed for compliance credit, provide data checking analysis to evaluate the validity and accuracy of the data to independently determine whether compliance has been achieved, provide direction to the installer to retest and correct problems when data checking determines that compliance has not been achieved, require resubmission of data when retesting and correction is directed, and maintain a database of all data submitted by installers and shall provide functionality that allows Energy Commission staff to query retained data or documents. The data that is collected by the Third Party Quality Control Program shall be more detailed than the data required for showing compliance with the Standards, shall provide an independent check on the validity and accuracy of the installer's claim that compliance has been achieved, and shall not be alterable by the installer to indicate that compliance has been achieved when in fact compliance has not been achieved.

The HERS Provider shall arrange for the services of a HERS Rater to conduct independent field verification of the installation work performed by the participating Third Party Quality Control Program installing contractor. The HERS Rater shall complete all of the responsibilities of a HERS Rater as specified in Appendix RA2, with the exception that sampling procedures utilized shall be limited to sampling of a "closed" group as described in Section RA2.6.3. However, the sample tested shall be selected and field verified from within a group of up to thirty dwelling units. The HERS Rater shall be an independent entity from the Third Party Quality Control Program. If re-sampling is required, full testing and corrective action shall be completed as specified in Section RA2.6.4 with the exception that re-sampling shall be completed for a minimum of one out of every thirty dwelling units from the group. The Third Party Quality Control Program shall not impose restrictions on the HERS Rater or the HERS Provider that limit their independence, or the ability of the HERS Rater or the HERS Provider to properly perform their functions. For example, the Third Party Quality Control Program shall not impose restrictions on the HERS Rater's use of equipment beyond those required by the Commission.

The Third Party Quality Control Program shall meet the requirements imposed on a HERS Rater specified in the Commission's HERS Program regulations (California Code of Regulations, Title 20, Division 2, Chapter 4, Article 8, Sections 1670 -1675), including the requirement to be an independent entity from the builder, the HERS Rater that provides independent field verifications, and the subcontractor installer as specified by Section 1673(j). However, a Third Party Quality Control Program may have business relationships with installers participating in the program to advocate or promote the program and an installer's participation in the program, and to advocate or promote products that the Third Party Quality Control Program sells to installers as part of the Program.

Prior to approval by the Commission, the Third Party Quality Control Program shall provide a detailed explanation to the Commission of 1) the data that is to be collected from the installers, 2) the data checking process that will be used to evaluate the validity and accuracy of the data, 3) the justification for why this data checking process will provide strong assurance that the installation actually complies, and 4) the format for the

database that will be maintained and the functionality that will allow Energy Commission staff to query retained data or documents. The Third Party Quality Control Program may apply for a confidential designation of this information as specified in the Commission's Administrative Regulations (California Code of Regulations, Title 20, Division 2, Chapter 7, Article 2, Section 2505). The Third Party Quality Control Program shall also provide a detailed explanation of the training that will be provided to installers, and the procedures that it will follow to complete independent field verifications.

The Third Party Quality Control Program certified installing contractor and the installing contractor's responsible installing technicians shall be required to be trained in quality installation procedures; the requirements of this Appendix RA2; and any other applicable specialized Third Party Quality Control Program-specific procedures as a condition to participation in the program. The training requirements also apply to the installing contractor's specialty subcontractors who provide Third Party Quality Control Program services. All installation verification and diagnostic work performed in the program shall be subject to the same quality assurance procedures as required by the Energy Commission's HERS program regulations.

The Third Party Quality Control Program shall be considered for approval as part of the rating system of a HERS Provider, which is certified as specified in the Commission's HERS Program regulations, Section 1674. A Third Party Quality Control Program can be added to the rating system through the recertification of a certified HERS Provider as specified by Title 20, Division 2, Chapter 4, Article 8, Section 1674(e).

RA2.8 *Installer Requirements and HERS Procedures for Alterations*

This section on alterations describes the differences that apply to alterations. Otherwise the procedures and requirements detailed in previous sections of Appendix RA2 shall also apply to alterations. For alterations, building owners or their agents may carry out the actions that are assigned to builders in previous sections of AppendixRA2.

Applicable procedures for registration of compliance documents described in Appendix RA2 shall also apply to alterations.

When compliance for an alteration requires field verification and diagnostic testing, the building owner may choose for the field verification and diagnostic testing to be completed for the dwelling unit individually, or alternatively, as part of a designated sample group of dwelling units for which the same installing company has completed work that requires HERS verification for compliance.

When sampling is utilized for HERS verification compliance for alterations, the dwelling units in a designated sample group are not required to be located within the same enforcement agency jurisdiction. However, to enable the enforcement agency to schedule testing to accomplish the corroboration of field verification and diagnostic testing procedures performed by the building owner, subcontractors, or certified HERS Rater as described in Section RA2.4.4, the enforcement agency may require that a separate dwelling unit from the sample group that is located within its jurisdiction be tested.

The building owner or agent of the building owner shall submit, or make arrangements for submittal of the required Certificate of Compliance information to the HERS Provider data registry to complete the applicable Certificate of Compliance documentation in accordance with the requirements in Standards Section 10-103(a)1 and 10-103(a)2.

When the enforcement agency does not require building design plans to be submitted with the application for a building permit for an alteration, the applicable registered Certificate of Compliance documentation specified in 10-103(a)1 is not required to be approved by the enforcement agency prior to issuance of a building permit, but shall be approved by the enforcement agency prior to final inspection of the dwelling unit, and shall be made available to the enforcement agency for all applicable inspections as specified in Standards Section 10-103(a)2A.

HERS Raters or other authorized users of the HERS Provider data registry may provide *documentation author* support to facilitate the submittal of the required Certificate of Compliance information to the HERS Provider data registry on behalf of the building owner or agent of the building owner, when such facilitation has been authorized by the building owner or agent of the building owner. *Documentation authors* shall provide an electronic signature to certify the documentation is accurate and complete. The building owner or agent of the

building owner who is eligible under Division 3 of the Business and Professions Code to take responsibility for the design specification for the alteration shall provide an electronic signature to register the Certificate of Compliance, to certify the information provided on the Certificate is true and correct, to certify conformance with Part 6, and shall submit the registered Certificate of Compliance to the enforcement agency for approval.

The building owner or agent shall make available to the HERS Rater a copy of the registered Certificate of Compliance approved by the enforcement agency.

The installer shall perform diagnostic testing and the procedures specified in Section RA2.5.

When the installation is complete, the person responsible for the performance of the installation shall complete the Certificate of Installation in accordance with the procedures specified in Section RA2.5.

The HERS Rater shall perform the applicable verification and diagnostic testing required for compliance following the procedures in Section RA2.6. If group sampling is utilized for compliance, the sampling procedures described in Section RA2.6.3 for sampling of a ”closed” group of up to seven dwelling units shall be used, requiring that all dwelling units within the group have been serviced by the same installing company. The installing company may request a group for sampling that is smaller than seven dwelling units. Whenever a HERS Rater for the group is changed, a new group shall be established.

Re-sampling, full testing, and corrective action shall be completed, if necessary, as specified by Section RA2.6.4.

The enforcement agency shall not approve the alteration until the enforcement agency has received a completed Certificate of Installation as specified in Section RA2.5, and a completed Certificate of Verification as specified in Section RA2.6.

Third Party Quality Control Programs, as specified in Section RA2.7, may also be used with alterations, and shall be limited to “closed” sample group sizes of thirty dwelling units or less.

When a Third Party Quality Control Program is used, the enforcement agency may approve compliance based on the Certificate of Installation, where data checking has indicated that the unit complies, on the condition that if the required HERS verification procedures determine that re-sampling, full testing, or corrective action is necessary, such work shall be completed.

(This page left intentionally blank)

Residential Appendix RA3

Appendix RA3 – Residential Field Verification and Diagnostic Test Protocols

Table of Contents

Appendix RA3 – Residential Field Verification and Diagnostic Test Protocols 1

RA3.1 Field Verification and Diagnostic Testing of Air Distribution Systems 3

RA3.1.1 Purpose and Scope 3

RA3.1.2 Instrumentation Specifications 3

RA3.1.3 Diagnostic Apparatus 4

RA3.1.4 Verification and Diagnostic Procedures 4

RA3.2 Field Verification and Diagnostic Testing of Refrigerant Charge for Air Conditioners and Heat Pumps 12

RA3.2.1 Purpose and Scope 12

RA3.2.2 Standard Charge Verification Procedure 14

RA3.2.3 Weigh-In Charging Procedure 23

RA3.3 Field Verification and Diagnostic Testing of Forced Air System Airflow Rate, Fan Watt Draw, and Determination of Fan Efficacy. 28

RA3.3.1 Instrumentation Specifications 28

RA3.3.2 Apparatus 29

RA3.3.3 Procedures 31

RA3.4 Field Verification of Installed HVAC System Components and Devices 34

RA3.4.1 Purpose and Scope 34

RA3.4.2 Charge Indicator Display (CID) Verification Procedure 34

RA3.4.3 Time Delay Relay Verification Procedure 35

RA3.4.4 HVAC System Verification Procedures 35

RA3.5 Quality Insulation Installation Procedures 36

RA3.5.1 Purpose and Scope 36

RA3.5.2 Definitions 36

RA3.5.3 BATT AND BLANKET INSULATION 40

RA3.5.4 LOOSE FILL INSULATION 46

RA3.5.5 RIGID BOARD INSULATION 52

RA3.5.6 SPRAY POLYURETHANE FOAM INSULATION 56
RA3.5.7 STRUCTURAL INSULATED PANEL (SIP) 64
RA3.5.8 INSULATED CONCRETE FORM (ICF) 68
RA3.6 Field Verification of Water Heating Systems 73
RA3.6.1 Purpose and Scope 73
RA3.6.2 HERS-Verified Pipe Insulation Requirements for all Hot Water Distribution Systems 73
RA3.6.3 HERS-Verified Pipe Insulation Credit (PIC-H) 73
RA3.6.4 HERS-Verified Central Parallel Piping (PP-H) 73
RA3.6.5 HERS-Verified Compact Hot Water Distribution System (CHWDS-H) 74
RA3.6.6 HERS-Verified Point of Use (POU-H) 75
RA3.6.7 HERS Verified Demand Recirculation; Manual Control (R-DRmc-H) 75
RA3.6.8 HERS-Verified Demand Recirculation: Sensor Control (RDRsc-H) 76
RA3.6.9 HERS-Multiple Recirculation Loop Design for DHW Systems Serving Multiple Dwelling Units 77
RA3.7 Field Verification and Diagnostic Testing of Mechanical Ventilation Systems 78
RA3.7.1 Purpose and Scope 78
RA3.7.2 Instrumentation Specifications 78
RA3.7.3 Diagnostic Apparatus for Measurement of Ventilation System Airflow 78
RA3.7.4 Procedures 79
RA3.8 Field Verification and Diagnostic Testing of Building Air Leakage 81
RA3.8.1 Purpose and Scope 81
RA3.8.2 On-Site Inspection Protocol 81
RA3.8.3 Protocol for Preparing the Building Enclosure for Testing 81
RA3.8.4 Accuracy Levels for Enclosure Leakage Testing 83
RA3.8.5 Installation of the Blower Door Air Tightness Testing System and Preliminary Recordings 84
RA3.8.6 Procedure for Conducting a Single-Point Air Tightness Test 84
RA3.8.7 Procedure for Conducting a Multi-Point Air Tightness Test 86
RA3.8.8 Procedure for Conducting a Repeated Single-Point Test 87
RA3.8.9 Application Results 89
RA3.8.10 Other Leakage Metrics: 89
RA3.8.11 Equipment Accuracy and Requirements 90
RA3.8.12 Air Leakage Reporting 90

RA3.1 *Field Verification and Diagnostic Testing of Air Distribution Systems*

RA3.1.1 Purpose and Scope

RA3.1 contains procedures for measuring the air leakage in forced air distribution systems as well as procedures for verifying duct location, duct surface area, duct R-value, return duct design, return grille design, and air filter installation.

RA3.1 applies to air distribution systems in both new and existing low-rise residential buildings.

RA3.1 provides required procedures for installers, HERS raters and others who need to perform field verification of air distribution systems.

Table RA3.1-1 is a summary of the tests and criteria included in RA3.1.

Table RA3.1-2 Provides compliance criteria for the duct leakage test protocols in Section RA3.1.4.3.

Table RA3.1-1 – Summary of Duct System Field Verification and Diagnostic Test Protocols

Verification/Diagnostic	Description	Procedure
Duct Location, Surface Area and R-value	Verify duct system was installed according to the specifications on the Certificate of Compliance or in accordance with an approved duct system design layout.	RA3.1.4.1
Verified Duct System Design	Procedure for duct system design layout approval and field verification	RA3.1.4.1.1
Duct Leakage	Verify that duct leakage is less than or equal to the compliance criteria given in Table RA3.1-2.	RA3.1.4.3
Return Duct Design	Verify compliance with the return duct and return grill sizing requirements of Table 150.0-C or Table 150.0-D).	RA3.1.4.4
Air Filter Device Design	Verify compliance with the requirements in 150(m)12.	RA3.1.4.5
Verification of Prescriptive Bypass Duct Requirements	Verification to confirm zonally controlled systems comply with the bypass duct requirements in 150.1(c)13	RA3.1.4.6

RA3.1.2 Instrumentation Specifications

The instrumentation for the air distribution diagnostic measurements shall conform to the following specifications:

RA3.1.2.1 *Pressure Measurements*

All pressure measurements shall be measured with measurement systems (i.e. sensor plus data acquisition system) having an accuracy equal to or better than ± 1% of pressure reading or ± 0.2 Pa. (0.0008 inches water) (whichever is greater). All pressure measurements within the duct system shall be made with static pressure probes such as Dwyer A303 or equivalent.

RA3.1.2.2 *Duct Leakage Measurements*

Duct leakage airflow rates during duct leakage testing shall be measured with a duct leakage airflow rate measurement apparatus that has a duct leakage airflow rate measurement accuracy equal to or better than ± 3 percent of reading or ± 1 cfm (whichever is greater).

RA3.1.2.3 *Calibration*

All instrumentation used for duct leakage diagnostic measurements shall be calibrated according to the manufacturer's calibration procedure to conform to the accuracy requirement specified in Section RA3.1.2.

RA3.1.3 Diagnostic Apparatus

RA3.1.3.1 *Apparatus for Duct Pressurization and Leakage Flow Measurement*

The apparatus for fan pressurization duct leakage measurements shall consist of a duct pressurization and flow measurement device meeting the specifications in Section RA3.1.2.

RA3.1.3.2 *Apparatus for Duct Leakage to Outside Measurement*

The apparatus for measuring duct leakage to outside shall include a fan that is capable of maintaining the pressure within the conditioned spaces in the house at 25 Pa (0.1 inches water) relative to the outdoors. The fan most commonly used for this purpose is known as a “blower door” and is typically installed within a temporary seal of an open exterior doorway.

RA3.1.3.3 *Apparatus for Smoke-Test of Accessible-Duct Sealing (Existing Duct Systems)*

The apparatus for determining leakage in and verifying sealing of all accessible leaks in existing duct systems provide means for introducing controllable amounts of non-toxic visual/theatrical smoke into the duct pressurization apparatus for identifying leaks in accessible portions of the duct system. The means for generating smoke shall have sufficient capacity to ensure that any accessible leaks will emit visibly identifiable smoke.

RA3.1.4 Verification and Diagnostic Procedures

This section describes the procedures used to verify compliance with the mandatory and performance compliance requirements for air distribution systems.

RA3.1.4.1 *Diagnostic Supply Duct Location, Surface Area and R-value*

The performance compliance calculations allow credit for duct systems that are designed to be in advantageous locations, that have reduced supply duct surface areas, and/or that provide higher R-values for portions of the system. This section specifies procedures for verification of duct systems for conformance with the requirements for the performance compliance credits. When indicated on the Certificate of Compliance, the Installer shall certify compliance with the applicable procedures in RA3.1.4.1 on a Certificate of Installation, and a HERS rater shall verify compliance on a Certificate of Verification.

RA3.1.4.1.1 **Verified Duct System Design**

An installed duct system meets the Verified Duct System Design compliance criteria if it is field verified by a HERS rater to be in conformance with a duct design layout that meets all applicable duct design and documentation requirements given in Section RA3.1.4.1.1. The duct design layout shall be approved by the enforcement agency.

RA3.1.4.1.1.1 *Verified Duct System Design - Duct Design Layout*

The duct system design shall be documented on the Duct Design Layout, a scaled layout drawing that identifies the location of the space conditioning equipment, all supply and return registers/grilles, the size, R-value, and location of each duct segment. The Duct Design Layout shall incorporate all other supply duct details reported on the registered Certificate of Compliance.

RA3.1.4.1.1.2 *Verified Duct System Design - Compliance Criteria*

The duct system design shall be based on an industry standard design methodology such as ACCA Manual D or an equivalent, and shall take into account: the available external static pressure from the air handler, the equivalent length or pressure drop of external devices, and the pressure drop of the duct runs accounting for size, type and configuration of the ducts and fittings. The duct system shall be designed to meet the required system airflow rate with the manufacturer-specified available external static pressure for the specified system

air handler at that airflow. The duct system design shall include calculations that indicate the duct system will operate at equal to or greater than 0.0292 cfm/Btu (350 cfm/12000 Btu) in cooling speed (350 cfm per nominal ton of condensing unit cooling capacity specified by the manufacturer) or, if heating only, equal to or greater than 16.8 cfm per 1000 Btu/hr furnace nominal output specified by the manufacturer.

RA3.1.4.1.1.3 *Verified Duct System Design - Duct Design Layout Approval*

The Duct Design Layout shall be included with the building design plans and the registered Certificate of Compliance submitted to the enforcement agency in conjunction with the application for the building permit. A copy of the Duct Design Layout approved by the enforcement agency shall be posted or made available with the building permit(s) issued for the building, and shall be made available to the enforcement agency, installing contractor, and HERS rater for use during the installation work and for all applicable inspections.

RA3.1.4.1.1.4 *Verified Duct System Design - Field Verification of Installation*

The location of all supply and return registers shall be verified by inspection of the interior of the dwelling unit. The location of the space conditioning equipment and the size, R-value, and location of each duct segment shall be verified by observation in the spaces where they are located. Deviations from the approved Duct Design Layout shall not be allowed without a revised a Duct Design Layout approved by the enforcement agency.

RA3.1.4.1.2 **Verification of 12 Linear Feet or Less of Duct Located Outside Of Conditioned Space**

A visual inspection shall confirm space conditioning systems with air handlers located outside the conditioned space have 12 linear feet or less of duct located outside the conditioned space including air handler and plenum. If the space conditioning system has more than 12 feet of duct outside of conditioned space, the system does not pass.

RA3.1.4.1.3 **Verification of Ducts Located In Conditioned Space**

A visual inspection shall confirm space conditioning systems are located entirely in conditioned space. If any part of the space conditioning duct system is outside of conditioned space, the system does not pass.

RA3.1.4.1.4 **Verification of Supply Duct Surface Area Reduction**

Compliance with Verified Duct System Design procedures specified in RA3.1.4.1.1 are prerequisite for compliance with the Supply Duct Surface Area Reduction compliance credit. A visual inspection shall confirm the installed duct system layout conforms to the Duct Design Layout.

RA3.1.4.1.5 **Verification of Buried Ducts on The Ceiling R-Value**

Compliance with Verified Duct System Design procedures specified in RA3.1.4.1.1 is prerequisite for compliance with the Buried Ducts on the Ceiling compliance credit. A visual inspection shall confirm the installed duct system layout conforms to the Duct Design Layout. This procedure shall be carried out prior to covering the ducts with insulation.

Ducts designed to be buried shall be insulated to R4.2 or greater. In addition, ducts designed to be in contact with the ceiling shall be not more than 3.5 inches from the ceiling drywall. A sign shall be hung near the attic access that displays a warning: “Caution: Buried Ducts. Markers indicate location of buried ducts.” All ducts that will be completely buried shall have vertical markers that are visible after insulation installation, placed at least every 8 feet of duct length and at the beginning and end of each duct run.

RA3.1.4.1.6 **Verification of Deeply Buried Ducts R-Value**

Compliance with Verified Duct System Design procedures specified in RA3.1.4.1.1 is prerequisite for compliance with the Deeply Buried Ducts compliance credit. A visual inspection shall confirm the installed duct system layout conforms to the Duct Design Layout. This procedure shall be carried out prior to covering the ducts with insulation.

Ducts designed to be buried shall be insulated to R4.2 or greater. In addition, ducts designed to be in contact with the ceiling shall be not more than 3.5 inches from the ceiling drywall. A sign shall be hung near the attic access that displays a warning: “Caution: Buried Ducts. Markers indicate location of buried ducts.” All ducts that will be completely buried shall have vertical markers that are visible after insulation installation, placed at least every 8 feet of duct length and at the beginning and end of each duct run.

RA3.1.4.2 *Determining Air Handler Airflow for Calculation of Duct Leakage Rate Compliance Targets*

For use in establishing the target duct leakage rate compliance criteria, the system air handler airflow shall be calculated using RA3.1.4.2.1, RA3.1.4.2.2, or RA3.1.4.2.3.

RA3.1.4.2.1 **Default Air Handler Airflow**

Default air handler airflow may be used only for homes where the duct system is being tested before the air conditioning and heating system is installed and the equipment specification is not known. For heating only systems the default air handler airflow shall be 0.5 CFM per ft² of Conditioned Floor Area.

RA3.1.4.2.2 **Nominal Air Handler Airflow**

For heating only systems the nominal air handler airflow shall be 21.7 CFM per kBtu/hr of rated heating output capacity. For systems with cooling, the nominal air handler airflow shall be 400 CFM per nominal ton of condensing unit cooling capacity as specified by the manufacturer or the heating only value, whichever is greater.

RA3.1.4.2.3 **Measured System Airflow**

The system airflow shall be as measured according to a procedure in Section RA3.3.3. The system airflow can be used as the air handler airflow for the purpose of establishing duct leakage percentage.

RA3.1.4.3 *Diagnostic Duct Leakage*

Diagnostic duct leakage measurement is used by installers and raters to verify that total leakage meets the criteria for any sealed duct system specified in the compliance documents.. Table RA3.1-2 shows the leakage compliance criteria and test procedures that may be used to demonstrate compliance.

Table RA3.1-2 – Duct Leakage Verification and Diagnostic Test Protocols and Compliance Criteria

Case	User Application	Leakage Compliance Criteria (% of Air Handler Airflow)	Procedure(s)
Sealed and tested new duct systems in single family homes and townhomes	Installer Testing at Final HERS Rater Testing	6%	RA3.1.4.3.1
Sealed and tested new duct systems in single family homes and townhomes	Installer Testing at Rough-in, Air Handling Unit Installed	6% Installer Inspection at Final	RA3.1.4.3.2 RA3.1.4.3.2.1 RA3.1.4.3.3
Sealed and tested new duct systems in single family homes and townhomes	Installer Testing at Rough-in, Air Handling Unit Not Installed	4% Installer Inspection at Final	RA3.1.4.3.2 RA3.1.4.3.2.2 RA3.1.4.3.3
Sealed and tested new duct systems in multi-family homes regardless of duct system location.	Installer Testing at Final HERS Rater Testing	12%Total Duct Leakage	RA3.1.4.3.1
Sealed and tested new duct systems in multi-family homes regardless of duct system location.	Installer Testing at Final HERS Rater Testing	6% Leakage to Outside	RA3.1.4.3.4
Verified Low Leakage Air Handler with Sealed and Tested Duct System Compliance Credit	Installer Testing at Final HERS Rater Testing	compliance target values 6% or less as specified on the Certificate of Compliance	RA3.1.4.3.1 and RA3.1.4.3.9
Verification of ducts located entirely in directly conditioned space, and Low leakage ducts in conditioned space compliance credit.	Installed Testing HERS Rater Testing	25 CFM Leakage to Outside	RA3.1.4.3.8
Sealed and tested altered existing duct systems	Installer Testing HERS Rater Testing	15% Total Duct Leakage	RA3.1.4.3.1
Sealed and tested altered existing duct systems	Installer Testing HERS Rater Testing	10% Leakage to Outside	RA3.1.4.3.4
Sealed and tested altered existing duct systems	Installer Testing and Inspection HERS Rater Testing and Verification	Fails Leakage Tests but All Accessible Ducts are Sealed Inspection and Smoke Test with 100% Verification	RA3.1.4.3.5 RA3.1.4.3.6 RA3.1.4.3.7

RA3.1.4.3.1 Diagnostic Duct Leakage from Fan Pressurization of Ducts

The objective of this procedure is for an installer to determine or a rater to verify the total leakage of a new or altered duct system. The total duct leakage shall be determined by pressurizing the entire duct system to a positive pressure of 25 Pa (0.1 inches water) with respect to outside. The following procedure shall be used for the fan pressurization tests:

(a) Verify that the air handler, supply and return plenums and all the connectors, transition pieces, duct boots and registers are installed. The entire duct system shall be included in the total leakage test.

(b) For newly installed or altered ducts, verify that cloth backed rubber adhesive duct tape has not been used and if a platform or other building cavity used to house the air distribution system has been newly installed or altered, it contains a duct or is ducted with duct board or sheet metal.

(c) Seal all the supply registers and return grilles except for one large centrally located return grille or the air handler cabinet access panel.

(d) Attach the fan flowmeter device to the duct system at the unsealed return grille or the air handler cabinet access panel.

(e) Install a static pressure probe at a supply register located close to the air handler, or at the supply plenum.

(f) Adjust the fan flowmeter to produce a positive 25 Pa (0.1 inches water) pressure at the supply register or the supply plenum with respect to the outside or with respect to the building space with the entry door open to the outside.

(g) Record the flow through the flowmeter; this is the leakage flow at 25 Pa (0.1 inches water).

(h) Divide the leakage flow by the total air handler airflow determined by the procedure in Section RA3.1.4.2 and convert to a percentage. If the leakage flow percentage is equal to or less than the compliance criterion from Table RA3.1-2 the system passes.

RA3.1.4.3.2 **Diagnostic Duct Leakage at Rough-in Construction Stage**

Installers may determine duct leakage in new construction by using diagnostic measurements at the rough-in building construction stage prior to installation of the interior finishing. When using this measurement technique, the installer shall complete additional inspection (as described in section RA3.1.4.3.3) of duct integrity after the finishing wall has been installed. In addition, after the finishing wall is installed, spaces between the register boots and the wallboard shall be sealed. Cloth backed rubber adhesive duct tapes shall not be used to seal the space between the register boot and the wall board.

The duct leakage measurement at rough-in construction stage shall be performed using a fan pressurization device. The duct leakage shall be determined by pressurizing both the supply and return ducts to 25 Pa (0.1 inches water). The following procedure (either RA3.1.4.3.2.1 or RA3.1.4.3.2.2) shall be used:

RA3.1.4.3.2.1 *Ducts with the Air Handling Unit Installed and Connected:*

For total leakage:

(a) Verify that supply and return plenums and all the collars, connectors, transition pieces, duct boots, and return boxes have been installed. If a platform or other building cavity is used to house portions of the air distribution system, it shall contain a duct, be lined with duct board or sheet metal, and all duct connectors and transition parts shall be installed and sealed. The platform, ducts, and connectors shall be included in the total leakage test. All joints shall be inspected to ensure that no cloth backed rubber adhesive duct tape is used.

(b) Seal all the supply duct boots and return boxes except for one return duct box.

(c) Attach the fan flowmeter device at the unsealed return duct box.

(d) Insert a static pressure probe at one of the sealed supply duct boots located close to the supply plenum or at the supply plenum.

(e) Adjust the fan flowmeter to maintain a positive 25 Pa (0.1 inches water) pressure in the duct system with respect to the outside, or with respect to the building space with the entry door open to the outside.

(f) Record the flow through the flowmeter; this is the leakage flow at 25 Pa (0.1 inches water).

(g) Divide the leakage flow by the total air handler airflow determined by the procedure in Section RA3.1.4.2 and convert to a percentage. If the leakage flow percentage is less than or equal to the compliance criterion from Table RA3.1-2 the system passes.

RA3.1.4.3.2.2 *Ducts with Air Handling Unit Not Yet Installed:*

For total leakage:

(a) Verify that supply and return plenums and all the collars, connectors, transition pieces, duct boots, and return boxes have been installed. If a platform or other building cavity is used to house portions of the air distribution system, it shall contain a duct, be lined with duct board or sheet metal, and all duct connectors and transition parts shall be installed and sealed. The platform, ducts and connectors shall be included in the total leakage test. All joints shall be inspected to ensure that no cloth backed rubber adhesive duct tape is used.

(b) Supply and return leaks may be tested separately, or the supply and return plenums may be connected together using suitable temporary air-tight means to facilitate testing the total system. If the supply and return systems are to be tested separately, the opening to the supply or return plenums shall be sealed to prevent leakage unless used as the point of attachment for the fan flowmeter.

(c) Seal all the supply duct boots and/or return duct boxes except for a location where the fan flowmeter device will be attached.

(d) Attach the fan flowmeter device at the unsealed location..

(e) Insert a static pressure probe at one of the sealed supply duct boots, or return duct boxes, located at a point in the system close to the fan flowmeter.

(f) Adjust the fan flowmeter to produce a positive 25 Pa (0.1 inches water) pressure at the supply plenum with respect to the outside or with respect to the building space with the entry door open to the outside.

(g) Record the airflow through the flowmeter; this is the leakage flow at 25 Pa (0.1 inches water).

(h) If the supply and return ducts are tested separately, repeat items 4 through 6 with the flow meter attached to the unsealed return box and the static pressure probe in the return duct boxes, located at a point in the system close to the fan flowmeter, then add the two leakage rates together to get a total leakage flow.

(i) Divide the leakage flow by the total air handler airflow determined by the procedure in Section RA3.1.4.2 and convert to a percentage. If the leakage flow percentage is less than or equal to the compliance criterion from Table RA3.1-2 the system passes.

RA3.1.4.3.3 Installer Visual Inspection at Final Construction Stage

After installing the interior finishing wall and verifying that one of the above rough-in tests was completed, the following procedure shall be used:

(a) Remove at least one supply and one return register, and verify that the spaces between the register boot and the interior finishing wall are properly sealed.

(b) If the house rough-in duct leakage test was conducted without an air handler installed, inspect the connection points between the air handler and the supply and return plenums to verify that the connection points are properly sealed.

(c) Inspect all joints to ensure that no cloth backed rubber adhesive duct tape is used.

RA3.1.4.3.4 Duct Leakage to Outside from Fan Pressurization of Ducts

The objective of this test is to determine the amount of duct leakage to outside the air barrier for the conditioned space. This measurement is utilized to verify that duct systems are located entirely within conditioned space. The procedure is also utilized to provide an alternate leakage measurement for situations when it is likely that a portion of the total duct leakage is inside the air barrier for the conditioned space. The duct leakage to outside shall be determined by pressurizing the ducts and the conditioned space of the house to 25 Pa (0.1 inches water) with respect to outside. The following procedure shall be used for the fan pressurization test of leakage to outside:

(a) Seal all the supply registers and return grilles except for one large centrally located return grille or the air handler cabinet access panel.

(b) Attach the fan flowmeter device to the duct system at the unsealed return grille or the air handler cabinet access panel.

(c) Install a static pressure probe at the supply plenum.

(d) Attach a blower door to an external doorway.

(e) If any ducts are located in an unconditioned basement, all doors or accesses between the conditioned space and the basement shall be closed, and at least one operable door or window (if it exists) between the basement and outside shall be open during the test.

(f) If the ducts are located in a conditioned basement, any door between the basement and the remaining conditioned space shall be open, and any basement doors or windows to outside must be closed during the test.

(g) Adjust the blower door fan to provide positive 25 Pa (0.1 inches of water) pressure in the conditioned space with respect to outside.

(h) Adjust the fan/flowmeter to maintain a zero pressure difference (plus or minus 0.5Pa (.002 inches water)) between the ducts and the conditioned space, and adjust the blower door fan to maintain a positive 25 Pa (0.1 inches of water) pressure in the conditioned space with respect to outside. This step may require several iterations.

(i) Record the flow through the flowmeter; this is the duct leakage flow to outside at 25 Pa (0.1 inches water). If the leakage flow is less than or equal to the applicable compliance criteria in Table RA3.1-2, the system passes.

(j) If required for compliance, divide the leakage flow by the system air handler airflow determined by the procedure in Section RA3.1.4.2, and convert to a percentage. If the leakage flow percentage is less than or equal to the criterion from Table 3.1-2 the system passes.

RA3.1.4.3.5 **Sealing of All Accessible Leaks**

For altered existing duct systems that are unable to pass either the Fan Pressurization of Ducts test (RA3.1.4.3.1), or the Duct Leakage to Outside test (RA3.1.4.3.4)), the objective of this test is to verify that all accessible leaks are sealed. The following procedure shall be used:

(a) Complete the leakage test specified in Section RA3.1.4.3.1 to measure the leakage before commencing duct sealing.

(b) Seal all accessible ducts.

(c) After sealing is complete, again use the procedure in RA3.1.4.3.1 to measure the leakage after duct sealing.

(d) Complete the Smoke Test as specified in RA3.1.4.3.6.

(e) Complete the Visual Inspection as specified in RA3.1.4.3.7.

RA3.1.4.3.6 **Smoke-Test of Accessible-Duct Sealing**

For altered existing ducts that fail the leakage tests, the objective of the smoke test is to confirm that all accessible leaks have been sealed. The following procedure shall be used:

(a) Inject either theatrical or other non-toxic smoke into a fan pressurization device that is maintaining a duct pressure difference of 25 Pa (0.1 inches water) relative to the duct surroundings, with all grilles and registers in the duct system sealed.

(b) Visually inspect all accessible portions of the duct system during smoke injection.

(c) The system shall pass the test if one of the following conditions is met:

1. No visible smoke exits the accessible portions of the duct system.
2. Smoke only emanates from the furnace cabinet which is gasketed and sealed by the manufacturer and no visible smoke exits from the accessible portions of the duct system.

RA3.1.4.3.7 **Visual Inspection of Accessible Duct Sealing**

For altered existing ducts that fail the leakage tests, the objective of this inspection in conjunction with the smoke test (RA3.1.4.3.6) is to confirm that all accessible leaks have been sealed. Visually inspect to verify that the following locations have been sealed:

(a) Connections to plenums and other connections to the forced air unit

(b) Refrigerant line and other penetrations into the forced air unit

(c) Air handler door panel (do not use permanent sealing material, metal tape is acceptable)

(d) Register boots sealed to surrounding material

(e) Connections between lengths of duct, as well as connections to takeoffs, wyes, tees, and splitter boxes.

RA3.1.4.3.8 **Verification of Low Leakage Ducts in Conditioned Space Compliance Credit, and Ducts Located Entirely In Directly Conditioned Space**

When ducts are located in conditioned space, additional performance compliance credit is available for low leakage ducts. If duct leakage to outside is equal to or less than 25 cfm when measured in accordance with Section RA3.1.4.3.4, the system passes. The dwelling must also be qualified to receive the credit for verified ducts in conditioned space as verified by visual inspection according to Section RA3.1.4.1.3.

When the Standards specify use of the procedures in Section RA3.1.4.3.8 to determine if space conditioning system ducts are located entirely in directly conditioned space, the duct system location shall be verified by diagnostic testing according to the following criterion: If duct leakage to outside is equal to or less than 25 cfm when measured in accordance with Section RA3.1.4.3.4, the system ducts shall be considered to be located entirely in directly conditioned space. Duct systems that do not meet this criterion shall not be considered to be located entirely in directly conditioned space.

RA3.1.4.3.9 **Verification of Low Leakage Air-Handling Unit with Sealed and Tested Duct System**

An additional performance compliance credit is available for verified low leakage ducts if a qualified low leakage air-handling unit is installed. The low leakage air-handling unit cabinet (furnace, or heat pump fan and inside coil) shall conform to the qualification requirements given in Reference Joint Appendix JA9, and shall be included in the list of low leakage air handling units published by the Energy Commission. The qualified air handler must be connected to a sealed and tested new duct system to receive the credit.

In order to comply with this credit, the duct system shall be verified to leak less than or equal to the leakage rate specified on the Certificate of Compliance using the methods in Section RA3.1.4.3.1, and the air handler manufacturer make and model number shall be verified to be a model certified to the Energy Commission as qualified for credit as a low leakage air handler.

RA3.1.4.4 ***Verification of Return Duct Design***

Verification shall consist of a visual inspection to confirm that the duct design conforms to the criteria given in Table 150.0-C or Table 150.0-D.

RA3.1.4.5 ***Verification of Air Filter Device Design***

Verification shall consist of a visual inspection to confirm that the air filter devices conform to the requirements given in Section 150.0(m)12.

RA3.1.4.6 ***Verification of Prescriptive Bypass Duct Requirements for Zonally Controlled Forced Air Systems***

When a zonally controlled forced air system is installed, the following shall be verified to determine compliance as required by Standards Section 150.1(c)13:

(a) A visual inspection shall confirm that bypass ducts that deliver conditioned supply air directly to the space conditioning system return duct airflow are not used; or
(b) If the Certificate of Compliance indicates an allowance for use of a bypass duct, the system with the bypass duct shall conform to the specifications given on the Certificate of Compliance.

If the zonally controlled system meets one of these criteria, the system complies. Otherwise the system does not comply

RA3.2 *Field Verification and Diagnostic Testing of Refrigerant Charge for Air Conditioners and Heat Pumps*

RA3.2.1 Purpose and Scope

(a) The procedures in Appendix RA3.2 are for use for residential air-cooled air conditioners and air-source heat pumps to verify the systems have the required refrigerant charge.

(b) For dwelling units with multiple air conditioners or heat pumps, the procedures shall be applied to each system separately.

(c) Appendix RA3.2 defines two procedures, the Standard Charge Verification Procedure in Section RA3.2.2 and the Weigh-in Charging procedure in Section RA3.2.3.

(d) Failure to follow the manufacturer's installation and charging instructions may result in significant refrigeration system faults that may invalidate refrigerant charge and metering device verification results. The installer shall certify that he/she has conformed to the manufacturer's instructions and specifications for charging the system prior to proceeding with the verification procedures in this appendix.

RA3.2.1.1 *Scope of the Standard Charge Verification Procedure (RA3.2.2)*

(a) The procedures in Section RA3.2.2 are applicable to ducted split system air-cooled air conditioners and ducted split system air-source heat pumps, and may be applicable to packaged air-cooled air conditioners and packaged air-source heat pumps.

(b) The procedures in Section RA3.2.2 require verification of the applicable minimum system airflow rate across the cooling coil when refrigerant charge is verified as specified in Section RA3.2.2.7.

(c) The procedures in Section RA3.2.2 require verification (for applicable systems) that the metering device is operating properly.

(d) The procedures in Section RA3.2.2 may be used when the outdoor air temperature is 55°F or above.

(e) When refrigerant charge verification is required for compliance, the applicable procedures in Section RA3.2.2 shall be used by the HVAC installer after installing a new HVAC system or after altering refrigerant-containing components in an existing HVAC system, and after charging the air conditioner or heat pump system in accordance with the manufacturer's instructions and specifications.

(f) The applicable procedures in Section RA3.2.2 shall always be used by the HERS Rater for verification of the system's refrigerant charge when HERS verification is required for compliance unless an applicable alternate procedure is available in Reference Residential Appendix RA1, or the Standards specify the Section RA3.2.3.2 procedure (observation of weigh-in) as mandatory for compliance, or as an available option for compliance and the HVAC installer elects to use the RA3.2.3.2 procedure for HERS verification.

(g) When the procedures in Section RA3.2.2.7.3 (alternative to compliance with minimum system airflow) are utilized for compliance, HERS verification compliance shall not use group sampling.

RA3.2.1.2 *Scope of the Weigh-In Charging Procedure (RA3.2.3)*

(a) The procedures in Section RA3.2.3 are applicable to air-cooled air conditioners or air-source heat pumps.

(b) The weigh-in charging procedure is an acceptable method for demonstrating compliance at any outdoor temperature.

(c) Use of the Section RA3.2.3 procedure does not exempt the system from compliance with all applicable minimum airflow verification requirements.

(d) When the procedures in Section RA3.2.3 are utilized by the HVAC installer, HERS verification compliance shall not use group sampling.

(e) The procedures in Section RA3.2.3.1 may be used by the HVAC installer as an alternative to the Standard Charge Verification Procedure in RA3.2.2, or as an alternative to any applicable Special Case Refrigerant Charge Verification Protocol in Reference Residential Appendix RA1.

(f) The procedures in Section RA3.2.3.1 shall be used by HVAC installers when refrigerant charge verification is required for compliance when the outdoor air temperature is below 55°F, and there is no applicable special case refrigerant charge verification protocol in Reference Residential Appendix RA1 available for use with the system for outdoor temperatures below 55°F.

(g) The procedures in Section RA3.2.3.1 shall be used by HVAC installers when refrigerant charge verification is required for compliance when the standard charge verification procedure in RA3.2.2 is not applicable to the system that must demonstrate compliance, and there is no applicable alternative special case refrigerant charge verification protocol in Reference Residential Appendix RA1 available for use with the system.

(h) The procedures in Section RA3.2.3.1 shall not be utilized by HERS Raters for verification of refrigerant charge.

(i) The procedures in Section RA3.2.3.2 shall be utilized by HERS Raters for verification of refrigerant charge only when the Standards specify that the RA3.2.3.2 procedure shall be used for HERS verification compliance, otherwise only when the Standards specify the RA3.2.3.2 procedure is an available option, and the HVAC installer elects to use the RA3.2.3.2 procedure for HERS verification compliance.

RA3.2.2 Standard Charge Verification Procedure

This section specifies the standard charge verification procedure. Under this procedure, the refrigerant charge is verified using the "superheat charging method" for systems with fixed metering devices, or the "subcooling charging method" for systems with thermostatic expansion valves (TXV) or electronic expansion valves (EXV).

The following sections describe the required instrumentation; required calibration for the instrumentation; required diagnostic measurements; and the required calculations to determine results that must be compared to the criteria in Table RA3.2-1 to determine compliance.

Refrigerant charge verification utilizing the procedures in Section RA3.2.2 requires compliance with a minimum airflow rate across the cooling coil at the time of charge verification, as defined in RA3.2.2.7.

Table RA3.2-1 summarizes the standard charge verification protocols and defines the corresponding compliance criteria that shall be used by system installers and HERS Raters.

Table RA3.2-1 – Refrigerant Charge Verification Protocols and Compliance Criteria

Case	User Application	Compliance Criteria	Procedure(s)
Standard Charge Verification Procedure - Fixed Metering Device Systems	Installer Testing at Final	55°F ≤ Outdoor Air Dry-bulb Temp ≤ 115°F Return Air Dry-bulb Temp ≥ 70°F Return Air Wet-bulb Temp ≤ 76°F Superheat tolerance ±5°F of the specified target	RA3.2.2.6.1
Standard Charge Verification Procedure - Fixed Metering Device Systems	HERS Rater Testing	55°F ≤ Outdoor Air Dry-bulb Temp ≤ 115°F Return Air Dry-bulb Temp ≥ 70°F Return Air Wet-bulb Temp ≤ 76°F Superheat tolerance ±8°F of the specified target	RA3.2.2.6.1
Standard Charge Verification Procedure - Variable Metering Device Systems	Installer Testing at Final	55°F ≤ Outdoor Air Dry-bulb Temp ≤ 120°F Return Air Dry-bulb Temp ≥ 70°F Subcooling tolerance ±3°F of the manufacturer-specified target[1] Metering Device tolerance: Superheat meets the Manufacturer's specifications or 4°F ≤ Superheat ≤ 25°F	RA3.2.2.6.2
Standard Charge Verification Procedure - Variable Metering Device Systems	HERS Rater Testing	55°F ≤ Outdoor Air Dry-bulb Temp ≤ 120°F Return Air Dry-bulb Temp ≥ 70°F Subcooling tolerance ±6°F of the manufacturer-specified target[1] and Subcooling ≥2°F Metering Device tolerance: Superheat meets the Manufacturer's specifications or 3°F ≤ Superheat ≤ 26°F	RA3.2.2.6.2

Note:
1. If a manufacturer-specified subcooling target value is not available or cannot be determined, the Executive Director may provide additional guidance for compliance.

The standard charge verification procedure detailed in this section shall be completed when the outdoor temperature is within the manufacturer's specified temperature range, or the outdoor temperature is 55°F or higher, after the HVAC installer has installed and charged the system in accordance with the manufacturer's specifications. The return dry bulb temperature shall be maintained above 70°F during the test.

This procedure does not relieve the installing contractor from any obligation to conform to the manufacturers' specifications for installation, refrigerant charge, or system operation. This procedure is used to determine compliance with Title 24, Part 6.

RA3.2.2.1 *Minimum Qualifications for this Procedure*

Persons who use this procedure to demonstrate compliance with Title 24 Part 6 shall be qualified to perform the following:

(a) Obtain accurate system pressure and saturation temperature readings utilizing digital refrigeration gauges.

(b) Obtain accurate temperature readings utilizing a digital thermometer and temperature sensors.

(c) Check calibration of digital refrigerant gauges using a known reference pressure.

(d) Check calibration of digital thermometer and temperature sensors using a known reference temperature.

(e) Determine the required or best location for temperature measurements in duct systems and on refrigerant lines.

(f) Calculate the measured superheat and subcooling.

(g) Determine the required superheat, based on the conditions present at the time of the test.

(h) Determine if measured values are accurate.

RA3.2.2.2 *Instrumentation Specifications*

Instrumentation for the procedures described in this section shall conform to the following specifications:

RA3.2.2.2.1 **Digital Temperature Measurement Specifications**

Temperature measurements shall be made utilizing digital temperature measurement instrumentation (combined sensor plus device for data acquisition, processing and reporting) that shall have dual channel capability in Celsius or Fahrenheit and conform to the following specifications:

RA3.2.2.2.1.1 *Dry-bulb Air Temperature Measurements*

Air temperature measurements made of supply or return airflow and the outdoor air entering the condensing unit shall meet the following specifications:

(a) Accuracy: ± 2°F.

(b) Resolution: 0.2°F.

RA3.2.2.2.1.2 *Wet-bulb Air Temperature Measurements Using Wetted Wick*

Air temperature measurements made of return airflow using the wetted wick method shall use a temperature sensor and a clean cotton wick wetted with distilled water. Temperature measurements using this method shall meet the following specifications:

(a) Accuracy: ± 2°F.

(b) Resolution: 0.2°F.

RA3.2.2.2.1.3 *Wet-bulb air Temperature Measurements Using Digital Hygrometer Device*

Air temperature measurements made of return airflow using a digital hygrometer device shall have a probe that is a minimum of 3 inches in length, and be capable of measurements for both dry-bulb and wet-bulb temperature. Dry-bulb and wet-bulb temperature measurements made with digital hygrometer devices shall meet the following specifications:

(a) Accuracy: ± 2°F wet-bulb temperature; or a calculated wet-bulb temperature based on accuracies of ± 3% RH and ± 2.0 degree F Dry bulb temperature.

(b) Resolution: 0.2°F.

RA3.2.2.2.1.4 *Refrigerant Lines - Pipe Temperature Measurement*

Temperature measurement of suction or liquid refrigerant lines using sensor mounting styles such as pipe-clamp sensors, Velcro strap-on, or an equivalent sensor device or sensor mounting method shall meet the following specifications:

(a) Accuracy: ± 2°F.

(b) Resolution: 0.2°F.

RA3.2.2.2.2 **Temperature Sensor Specifications**

RA3.2.2.2.2.1 *Response Time Qualification Specification for Air Temperature Sensors*

Measurements for verification of refrigerant charge require air temperature sensors that pass the following qualifying test:

(a) Using a test enclosure or test environment that is maintained at known dry bulb temperature T1,

(b) The temperature sensor subjected to the qualifying test shall be placed outside the test enclosure or test environment until its temperature has stabilized at a drybulb temperature T2,

(c) The absolute value of (T1 minus T2) shall be greater than 40ºF,

(d) The sensor shall have a response time that produces the accuracy specified in Section RA3.2.2.2.1 within 90 seconds of insertion into the test enclosure or test environment.

RA3.2.2.2.2.2 *Response Time and Application Specification for Pipe Temperature Sensors*

Measurements for verification of refrigerant charge require two (2) pipe temperature sensors that pass the following qualifying test:

(a) Using test pipes in six sizes (1/4” dia., 3/16” dia., 3/8” dia., 3/4” dia., 7/8” dia., 1 1/8” dia.) that are maintained at a known temperature T1 in a test enclosure or test environment that is maintained at a known dry-bulb temperature T2,

(b) The absolute value of (T1 minus T2) is greater than 40ºF.

(c) The temperature sensor subjected to the qualifying test shall be placed in the test enclosure or test environment until its temperature has is stabilized at T2.

(d) The sensor shall have a response time that produces the accuracy specified in Section RA3.2.2.2.1.4 within 90 seconds of application of the sensor to one of the test pipes.

(e) A sensor may be used for more than one pipe size if it passes the above test for each pipe size for which it is used.

RA3.2.2.2.3 **Digital Refrigerant Gauge Specifications**

Refrigerant pressure measurements shall be made utilizing digital measurement instrumentation. Measurements made with digital refrigerant pressure measurement devices shall meet the following specifications

(a) accuracy: ± 7.0 psi liquid line pressure

(b) accuracy: ± 3.5 psi suction pressure

As an alternative, two saturation pressure measurement sensors (SPMS) may be permanently installed by the equipment manufacturer, or in a manner and location approved by the equipment manufacturer for use for measuring the saturation pressure of the refrigerant in the evaporator coil and in the condenser coil. Refer to Reference Joint Appendix JA6.2 for additional specification for SPMS.

RA3.2.2.3 *Measurement Access Hole (MAH) Specification*

When required for compliance by Standards Section 150.1(c)7Aia, or when return plenum measurements are necessary for compliance with refrigerant charge verification requirements, a 5/8 inch (16 mm) diameter hole shall be provided as shown in Figure RA3.2-1.

Return plenum temperature measurements shall be taken at the location specified in Figure RA3.2-1 when performing the procedures in RA3.2. The measurement access shall be sealed to prevent leakage after the measurements have been completed.

The hole location shown in Figure RA3.2-1 can be applied to any one of the four sides of the return plenum. The hole location shall be labeled "Title 24 – Return Plenum Measurement Access" in at least 12-point type.

For air-handling units with the return located entirely within conditioned space (such as when an up-flow air handler is mounted on a pedestal in a closet in the dwelling, or when the return grille is an integral part of the air-handling unit), the return plenum measurement access hole is not required, and in this case the return air temperature measurements shall be taken at the return grill when performing the procedures in RA3.2.

Systems that cannot conform to the specifications for the hole location shown in Figure RA3.2-1 shall not be required to have holes as described in Figure RA3.2-1; however if return plenum measurements are required for compliance, an alternate location that provides access for making an accurate return plenum measurement shall be used.

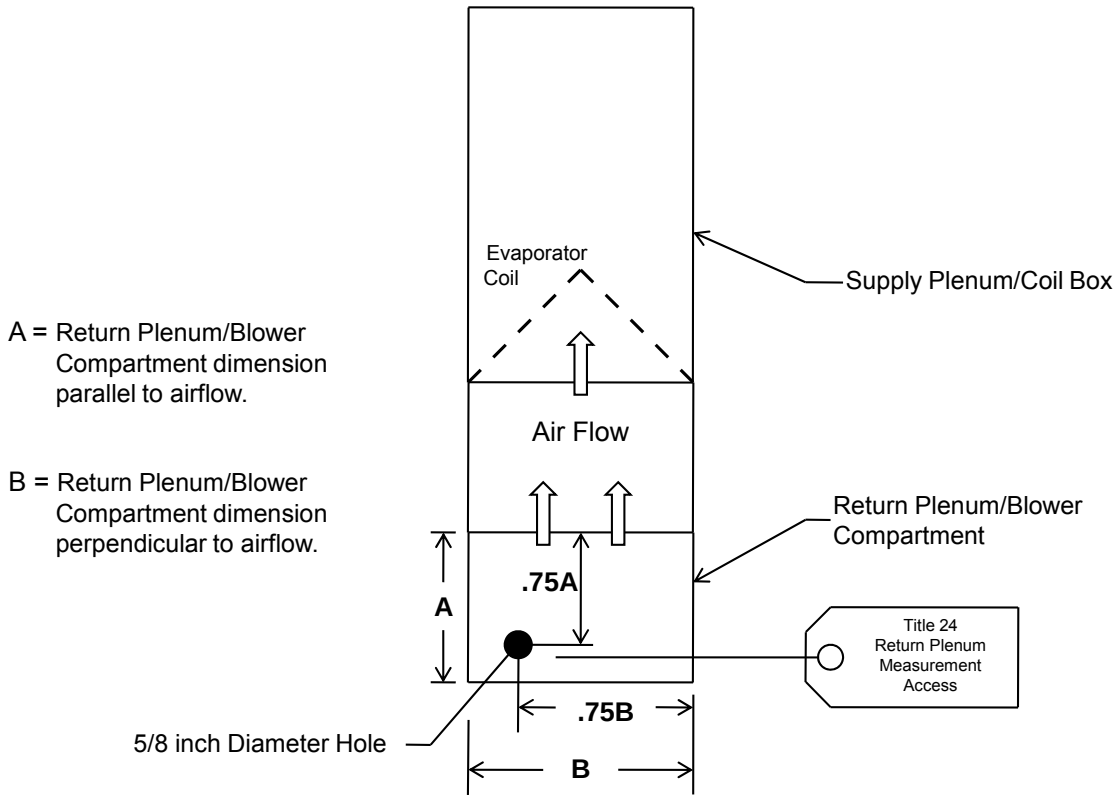

Figure RA3.2-1 Measurement Access Hole

RA3.2.2.4 *Calibration*

The accuracy of instrumentation shall be maintained using the following procedures. A sticker with the calibration check date shall be affixed to each instrument calibrated.

RA3.2.2.4.1 Digital Thermometer and Temperature Sensor Field Calibration Procedure

Thermometers with their temperature sensors shall be calibrated monthly to ensure that they are reading accurate temperatures.

The following procedure shall be used to check thermometer/temperature sensor calibration:

(a) Fill an insulated cup (foam) with crushed ice from distilled water. The ice shall completely fill the cup. Add distilled water to fill the cup.

(b) Insert two sensors into the center of the ice bath and attach them to the digital thermometer.

(c) Let the temperatures stabilize. The temperatures shall be 32°F (plus or minus 1°F). If the temperature is off by more than 1°F make corrections according to the manufacturer's instructions. Any sensors that are off by more than 2°F shall be replaced.

(d) Switch the sensors and ensure that the temperatures read on both channels are still within plus or minus 1°F of 32°F.

(e) Affix sticker with calibration check date onto sensor.

(f) Repeat the process for all sensors.

RA3.2.2.4.2 Digital Refrigerant Gauge Field Check Procedure

Refrigerant gauges shall be checked monthly to ensure that the gauges are reading the correct pressures and corresponding temperatures. The following procedure shall be used to check gauge calibration:

(a) Place a refrigerant cylinder in a stable temperature environment and let it acclimate for 4 hours minimum to stabilize to the ambient conditions.

(b) Attach a calibrated temperature sensor to the refrigerant cylinder using tape so that there is good contact between the cylinder and the temperature sensor.

(c) Insulate over the temperature sensor connection to the cylinder.

(d) Zero the low side and high side refrigerant gauges with all ports open to atmospheric pressure (no hoses attached).

(e) Re-install the hoses, attach the high side gauge to the refrigerant cylinder, and open the valves to measure the pressure in the refrigerant cylinder.

(f) Read the temperature of the sensor on the refrigerant cylinder.

(g) Using a pressure/temperature chart for the refrigerant, look up the pressure that corresponds to the temperature measured.

(h) If gauge does not read the correct pressure corresponding to the temperature, the gauge is out of calibration and needs to be recalibrated.

(i) Close the valve to the refrigerant cylinder, and bleed off a small amount of refrigerant to lower the high side pressure to give a corresponding temperature to between 45°F and 55°F.

(j) Open the valves between the high side gauge and low side gauge.

(k) If the two gauges corresponding refrigerant temperatures do not read within 1°F of each other, the low side gauge is out of calibration and needs to be recalibrated.

(l) Affix sticker with calibration check date onto refrigerant gauge.

RA3.2.2.4.3 Digital Hygrometer Calibration

Digital hygrometers shall be calibrated according to the manufacturer's recommended procedures. When the manufacturer certifies the calibration for a limited time, the digital hygrometer shall be recalibrated according to the manufacturers required procedure when the calibration period expires.

RA3.2.2.5 *Charge Verification Measurements*

The following procedure shall be used to obtain measurements necessary to verify the required refrigerant charge.

(a) Follow the manufacturer's directions and adhere to the manufacturer's limitations on indoor ambient air temperature ($T_{indoor\ air}$) and outdoor ambient air temperature ($T_{outdoor\ air}$) applicable to this procedure. Ensure that the return air dry bulb temperature remains equal to or greater than 70°F prior to and while performing the measurements.

(b) Connect the refrigerant gauges to the service ports, taking normal precautions to not introduce air into the system.

(c) Attach one pipe temperature sensor to the suction line near the suction line (low side) service valve and attach one pipe temperature sensor to the liquid line near the liquid line (high side) service valve. The sensors should be positioned to make good contact with the surface of the refrigerant line.

(d) Attach a temperature sensor to measure the condenser entering air dry-bulb temperature. The sensor shall be placed so that it records the average condenser air entering temperature and is shaded from direct sun.

(e) Insert a dry-bulb temperature sensor into the return plenum at the "Title 24 – Return Plenum Measurement Access" detailed in Section RA3.2.2.3.

(f) Be sure that all cabinet panels that affect airflow are in place before making measurements. The temperature sensors shall remain attached to the system until the final charge is determined.

(g) Operate the air conditioner in cooling mode for 15 minutes to allow the temperatures and pressures to stabilize before taking any measurements. While the system is stabilizing, proceed with setting up the remaining temperature sensors if used.

(h) If used, place the cotton wick wet-bulb temperature sensor in distilled water, and ensure it is saturated. Do not get the dry-bulb temperature sensors wet.

(i) If the system has a fixed metering device, at 12 minutes, insert a wet-bulb temperature sensor into the return plenum at the "Title 24 – Return Plenum Measurement Access" detailed in Section RA3.2.2.3.

(j) If the system has a fixed metering device, after the system has operated for 15 minutes, and when the return plenum wet-bulb temperature has stabilized, using the temperature sensor already in place, measure and record the return (evaporator entering) air wet-bulb temperature ($T_{return,\ wb}$).

(k) Using the temperature sensor already in place, measure and record the return (evaporator entering) air dry-bulb temperature ($T_{return,\ db}$).

(l) Using the refrigerant gauge or saturation pressure measurement sensor already attached, measure and record the suction line (low side) pressure, and record the refrigerant saturation temperature corresponding to the measured low side pressure ($T_{evaporator,\ sat}$).

(m) Using the refrigerant gauge or saturation pressure measurement sensor already attached, measure and record the liquid line (high side) pressure, and record the refrigerant saturation temperature corresponding to the measured high side pressure ($T_{condenser,\ sat}$).

(n) Using the pipe temperature sensor already in place, measure and record the suction line temperature ($T_{suction,}$).

(o) Using the pipe temperature sensor already in place, measure and record the liquid line temperature (T_{liquid}).

(p) Using the dry-bulb temperature sensor already in place, measure and record the condenser (entering) air dry-bulb temperature ($T_{condenser,\ db}$).

The above measurements shall be used to verify the refrigerant charge as described in following sections.

RA3.2.2.6 *Refrigerant Charge and Metering Device Calculations*

The following steps describe the calculations to determine if the system meets the required refrigerant charge and metering device function using the measurements determined in Section RA3.2.2.5. If a system fails, then remedial actions must be taken by the HVAC system installer. Be sure to run the air conditioner for 15 minutes after the final adjustments before taking any measurements.

RA3.2.2.6.1 **Fixed Metering Device Calculations - Superheat Charging Method**

The Superheat Charging Method is used only for systems equipped with fixed metering devices. These include capillary tubes and piston-type metering devices.

(a) Calculate Actual Superheat as the suction line temperature minus the evaporator saturation temperature.

Actual Superheat = $T_{suction,} - T_{evaporator, sat}$.

(b) Determine and record the Target Superheat using Table RA3.2-2 or the manufacturer's superheat chart using the return air wet-bulb temperature ($T_{return, wb}$) and condenser air dry-bulb temperature ($T_{condenser, db}$).

(c) If a dash mark is read from Table RA3.2-2, the target superheat is less than 5°F. Note that **a valid refrigerant charge verification test cannot be performed under these conditions**. A severely undercharged unit will show over 9°F of superheat. However overcharged units cannot be detected from the superheat method under these conditions. The usual reason for a target superheat determination of less than 5°F is that outdoor conditions are too hot and the indoor conditions are too cool. One of the following is needed so a target superheat value can be obtained from Table RA3.2-2 either 1) turn on the space heating system and/or open the windows to warm up indoor temperature; or 2) retest at another time when conditions are different.

(d) Calculate the difference between actual superheat and target superheat (Actual Superheat - Target Superheat).

(e) In order to allow for inevitable differences in measurements, the Pass/Fail criteria are different for the Installer and the HERS Rater.

(f) For the Installer, if the difference is within the tolerance given as compliance criteria in Table RA3.2-1, then the system **passes** the required refrigerant charge criterion.

(g) For the HERS Rater inspecting the system, if the difference is within the criteria in Table RA3.2-1, then the system **passes** the required refrigerant charge criterion.

(h) For the Installer, if the system fails to meet the criteria, refrigerant needs to be added if the superheat is too high and refrigerant needs to be removed if it is too low. The installer needs to remain aware of other potential system faults. Adjust refrigerant charge and check the measurements as many times as necessary to pass the test. After the final adjustment has been made, allow the system to run 15 minutes before completing the final measurement procedure.

RA3.2.2.6.2 **Variable Metering Device Calculations – Subcooling Charging Method**

The Subcooling Charging Method is used for systems equipped with variable metering devices. These include Thermostatic Expansion Valves (TXV) and Electronic Expansion Valves (EXV). The amount of refrigerant is set based on the measured subcooling value, and the measured superheat value determines whether the metering device is working properly.

(a) Calculate Actual Subcooling as the condenser saturation temperature minus the liquid line temperature. Actual Subcooling = $T_{condenser, sat} - T_{liquid}$.

(b) Determine the Target Subcooling specified by the manufacturer

(c) Calculate the deviation of the actual subcooling value from the target subcooling value. Subcooling Deviation = Actual Subcooling - Target Subcooling.

In order to allow for inevitable differences in measurements, the Pass/Fail criteria are different for the Installer than for the HERS Rater.

(d) If the Subcooling Deviation is within the subcooling tolerance allowed by Table RA3.2-1, then the system complies with the subcooling criterion, otherwise the system does not comply.

(e) For the HVAC installer, if the system does not comply, and if the Actual Subcooling value is greater than the Target Subcooling value, the Installer shall remove refrigerant. If the Actual Subcooling value is less than the Target Subcooling value, the Installer shall add refrigerant. The Installer shall determine whether there are other system faults that may affect the validity of the refrigerant charge verification procedure, and make any needed system repairs or adjustments to clear system faults prior to completion of the refrigerant charge verification procedure. The Installer shall adjust the refrigerant charge and check the measurements as many times as necessary to pass the test. After the final adjustment has been made, the Installer shall allow the system to run 15 minutes before completing the final measurement procedure.

(f) Calculate Actual Superheat as the suction line temperature minus the evaporator saturation temperature. Actual Superheat = $T_{suction,} - T_{evaporator, sat}$.

(g) If possible, determine the Superheat Range specified by the manufacturer.

(h) In order to allow for inevitable differences in measurements, the Pass/Fail criteria are different for the Installer than for the HERS Rater.

If the superheat is within the tolerance allowed by Table RA3.2-1, then the system complies with the metering device criterion, otherwise the system does not comply.

For the HVAC installer, if the system does not comply remedial actions must be undertaken to ensure the TXV or EXV is operating properly.

RA3.2.2.7 *Minimum System Airflow Requirements*

Compliance with the refrigerant charge verification procedures in Section RA3.2.2 requires that the system meet minimum system airflow criteria as specified in subsections RA3.2.2.7.1, RA3.2.2.7.2, or RA3.2.2.7.3.

RA3.2.2.7.1 **Minimum System Airflow Requirements for New Systems**

For newly constructed buildings, space-conditioning systems shall comply with the minimum system airflow requirement by demonstrating compliance with Standards Section 150.0(m)13.

RA3.2.2.7.2 **Minimum System Airflow Requirements for Altered Systems**

For altered space conditioning systems, the minimum system airflow requirement shall be verified by use of one of the system airflow rate measurements defined in Section RA3.3 to demonstrate a measured airflow rate equal to or greater than 300 cfm per nominal ton of condensing unit cooling capacity. If a system fails to meet this minimum airflow criterion, remedial actions shall be taken to ensure the system conforms to the minimum 300 cfm per ton airflow requirement.

RA3.2.2.7.3 **Alternative to Compliance with Minimum System Airflow Requirements for Altered Systems**

When an altered space conditioning system fails to demonstrate compliance with the required 300 cfm per nominal condensing unit ton minimum system airflow, the system shall perform the remedial actions listed in Section RA3.2.2.7.3.1. If these remedial actions fail to bring the system into compliance with the 300 cfm per nominal condensing unit ton airflow requirement, the installer shall complete the refrigerant charge verification utilizing the best airflow rate attainable. The system shall be considered in compliance if the installer certifies that the following corrective measures have been performed:

RA3.2.2.7.3.1 *Remedial Actions*

The installer shall attempt to correct non-compliant system airflow by performing the following remedial actions:

(a) Check to determine that the air filter media is clean. If the air filter media is dirty, then replace it with clean filter media.

(b) Open all registers and dampers and remove any obstructions.

(c) Replace crushed, blocked or restricted ducts if possible.

(d) Check to determine that the evaporator coil is clean, or that there are no obstructions to airflow through the evaporator coil. If the evaporator coil is dirty or blocked with debris, if possible, clean the evaporator coil using a method approved by the manufacturer.

(e) Set the air handler fan to high speed for cooling, and ensure that the blower wheel and motor are operating properly, within manufacturers specifications.

(f) Check to determine whether the return duct system or return filter grille is sized too small for the installed system. If the return duct or return grille is sized too small, if possible, perform applicable alterations work on the return duct system or return grille in order to improve the system airflow rate.

When performing these remedial actions determines that there is a fault, a corrective action shall be performed if possible. In many cases, airflow can be improved by adding a return duct and filter grille, or enlarging the existing return duct or filter grille. Alteration of the return duct system is an alternative that shall be considered if applicable to the existing system, and if other remedial actions do not improve the airflow. Alteration of the return duct system to bring the system airflow rate into compliance is expected to be attainable for systems with ducts in an attic space with sufficient clearances for accommodating improvements to the return duct system.

RA3.2.2.7.3.2 *Installer Compliance*

For each of the listed remedial actions, the HVAC installer shall certify that the remedial action was performed, and indicate whether the action was completed successfully or was not completed successfully. When a remedial action was not completed successfully the installer shall indicate on the installation certificate the reason the action was not completed successfully.

RA3.2.2.7.3.3 *HERS Rater Compliance*

The HERS Rater shall review the information submitted on the installation certificate and perform follow-up communications with the HVAC installer or the homeowner. The system complies if the HERS Rater determines the remedial actions have been performed, and the information reported on the installation certificate is valid.

RA3.2.3 Weigh-In Charging Procedure

This section specifies the weigh-in charging procedure in which the weight of the required refrigerant charge is determined by using the manufacturer's specifications for a standard refrigerant charge weight and taking into account adjustment factors such as deviations in refrigerant line length and diameter. The calculated weight of refrigerant is then installed using a refrigerant scale. RA3.2.3 provides two procedures: Section RA3.2.3.1 shall be used by the HVAC installer when the weigh-in procedure is required by the Standards for compliance. Section RA3.2.3.2 shall be used by the HERS Rater when the Standards specify use of the procedure for compliance, or specify it as an optional procedure for compliance. The weigh-in charging procedure is an acceptable method for demonstrating compliance at any outdoor temperature, however if the weigh-in charging procedure is used, HERS verification of compliance cannot use group sampling.

HVAC installers shall use the weigh-in charging procedure in accordance with the space conditioning system manufacturer’s specifications.

RA3.2.3.1 ***HVAC Installer - Weigh-In Charging Procedure***

Split system air conditioners are shipped from the factory charged with a standard amount of refrigerant as indicated on the nameplate. The manufacturer-supplied refrigerant charge is expected to be the correct amount for the system based on a standard liquid line length and diameter. It is the responsibility of the HVAC installer

to ensure that the charge is correct for each air conditioner and to adjust the charge based on liquid line dimensions that deviate from the manufacturer's standard line specification.

RA3.2.3.1.1 **Procedure Options**

There shall be two options for compliance using the weigh-in charging procedure:

RA3.2.3.1.1.1 *Weigh-in Charge Adjustment*

This option is applicable to a new system or existing system when a new outdoor unit is installed (with factory charge in outdoor unit). The HVAC installer shall weigh in lineset and indoor coil charge adjustment after evacuation of lineset and indoor coil. The documentation shall include the calculated charge adjustment for the lineset.

RA3.2.3.1.1.2 *Weigh-in Total Charge*

This option is applicable to all systems. The installer shall weigh in the total system charge after refrigerant recovery and evacuation of the entire system. The total system charge includes the nameplate charge for the outdoor unit and any adjustment for the lineset dimensions and indoor coil in accordance with the manufacturer’s instructions. The documentation shall include the nameplate charge and the calculated lineset adjustment.

RA3.2.3.1.2 **Minimum Qualifications for this Procedure**

Persons who use this procedure to demonstrate compliance with Title 24, Part 6 shall be qualified to perform the following:

(a) Calculate the correct system charge based on the Manufacturer's standard charge and adjustments to the standard charge based on lineset dimensions and indoor coil.

(b) Obtain accurate refrigerant charge weight.

RA3.2.3.1.3 **Instrumentation Specifications**

Instrumentation for the procedures described in this section shall conform to the following specifications:

RA3.2.3.1.3.1 *Refrigerant Scale*

An electronic refrigerant scale having an accuracy equal to or better than ±0.5 oz or ± 0.5% of the measured value shall be used.

RA3.2.3.1.4 **Calibration**

The accuracy of instrumentation shall be maintained using the following procedures. A sticker with the calibration check date shall be affixed to each instrument calibrated.

RA3.2.3.1.4.1 *Refrigerant Scale*

Refrigerant scales shall be calibrated according to the manufacturer's recommended procedures. When the manufacturer certifies the calibration for a limited time, the refrigerant scale shall be recalibrated according to the manufacturers required procedure when the calibration period expires.

RA3.2.3.1.5 **Weigh-in Procedure**

The weigh-in procedure shall be performed in accordance with all manufacturer specifications to confirm:

(a) The system is braised with dry nitrogen in the lines and indoor coil.

(b) The system is evacuated to 500 microns or less and, when isolated, rises no more than 300 microns over five minutes.

(c) The lineset correction is calculated based on the length and diameter of the lineset.

(d) The indoor coil correction to refrigerant weight is used if it is supplied by the manufacturer.

(e) The amount of charge calculated for the lineset correction (and indoor coil correction if available) is added or removed, or the total charge based on the lineset, indoor coil, and standard label charge is installed.

The HVAC Installer shall certify on the Certificate of Installation that the manufacturer's specifications for these procedures have been met.

RA3.2.3.2 ***HERS Rater - Observation of Weigh-In Charging Procedure***

When the Standards indicate this procedure is required, or is an option for compliance, the HERS Rater shall coordinate with the HVAC Installer to observe the weigh-in charging procedure.

HERS Rater shall observe and confirm:

(a) The system is evacuated to 500 microns or less and, when isolated, rises no more than 300 microns over five minutes.

(b) The lineset correction is calculated based on the length and diameter of the lineset.

(c) The indoor coil correction to refrigerant weight is used if it is supplied by the manufacturer.

(d) The installer adds or removes the amount of charge calculated for the lineset correction or installs the total charge based on lineset, indoor coil, and standard label charge.

Table RA3.2-2 Target Superheat (Suction Line Temperature - Evaporator Saturation Temperature)

Condenser Air Dry-Bulb Temperature (°F) (T condenser, db)	Return Air Wet-Bulb Temperature (°F) (T return, wb)																										
	50	51	52	53	54	55	56	57	58	59	60	61	62	63	64	65	66	67	68	69	70	71	72	73	74	75	76
55	8.8	10.1	11.5	12.8	14.2	15.6	17.1	18.5	20.0	21.5	23.1	24.6	26.2	27.8	29.4	31.0	32.4	33.8	35.1	36.4	37.7	39.0	40.2	41.5	42.7	43.9	45.0
56	8.6	9.9	11.2	12.6	14.0	15.4	16.8	18.2	19.7	21.2	22.7	24.2	25.7	27.3	28.9	30.5	31.8	33.2	34.6	35.9	37.2	38.5	39.7	41.0	42.2	43.4	44.6
57	8.3	9.6	11.0	12.3	13.7	15.1	16.5	17.9	19.4	20.8	22.3	23.8	25.3	26.8	28.3	29.9	31.3	32.6	34.0	35.3	36.7	38.0	39.2	40.5	41.7	43.0	44.2
58	7.9	9.3	10.6	12.0	13.4	14.8	16.2	17.6	19.0	20.4	21.9	23.3	24.8	26.3	27.8	29.3	30.7	32.1	33.5	34.8	36.1	37.5	38.7	40.0	41.3	42.5	43.7
59	7.5	8.9	10.2	11.6	13.0	14.4	15.8	17.2	18.6	20.0	21.4	22.9	24.3	25.7	27.2	28.7	30.1	31.5	32.9	34.3	35.6	36.9	38.3	39.5	40.8	42.1	43.3
60	7.0	8.4	9.8	11.2	12.6	14.0	15.4	16.8	18.2	19.6	21.0	22.4	23.8	25.2	26.6	28.1	29.6	31.0	32.4	33.7	35.1	36.4	37.8	39.1	40.4	41.6	42.9
61	6.5	7.9	9.3	10.7	12.1	13.5	14.9	16.3	17.7	19.1	20.5	21.9	23.3	24.7	26.1	27.5	29.0	30.4	31.8	33.2	34.6	35.9	37.3	38.6	39.9	41.2	42.4
62	6.0	7.4	8.8	10.2	11.7	13.1	14.5	15.9	17.3	18.7	20.1	21.4	22.8	24.2	25.5	27.0	28.4	29.9	31.3	32.7	34.1	35.4	36.8	38.1	39.4	40.7	42.0
63	5.3	6.8	8.3	9.7	11.1	12.6	14.0	15.4	16.8	18.2	19.6	20.9	22.3	23.6	25.0	26.4	27.8	29.3	30.7	32.2	33.6	34.9	36.3	37.7	39.0	40.3	41.6
64	-	6.1	7.6	9.1	10.6	12.0	13.5	14.9	16.3	17.7	19.0	20.4	21.7	23.1	24.4	25.8	27.3	28.7	30.2	31.6	33.0	34.4	35.8	37.2	38.5	39.9	41.2
65	-	5.4	7.0	8.5	10.0	11.5	12.9	14.3	15.8	17.1	18.5	19.9	21.2	22.5	23.8	25.2	26.7	28.2	29.7	31.1	32.5	33.9	35.3	36.7	38.1	39.4	40.8
66	-		6.3	7.8	9.3	10.8	12.3	13.8	15.2	16.6	18.0	19.3	20.7	22.0	23.2	24.6	26.1	27.6	29.1	30.6	32.0	33.4	34.9	36.3	37.6	39.0	40.4
67	-	-	5.5	7.1	8.7	10.2	11.7	13.2	14.6	16.0	17.4	18.8	20.1	21.4	22.7	24.1	25.6	27.1	28.6	30.1	31.5	33.0	34.4	35.8	37.2	38.6	39.9
68	-	-	-	6.3	8.0	9.5	11.1	12.6	14.0	15.5	16.8	18.2	19.5	20.8	22.1	23.5	25.0	26.5	28.0	29.5	31.0	32.5	33.9	35.3	36.8	38.1	39.5
69	-	-	-	5.5	7.2	8.8	10.4	11.9	13.4	14.8	16.3	17.6	19.0	20.3	21.5	22.9	24.4	26.0	27.5	29.0	30.5	32.0	33.4	34.9	36.3	37.7	39.1
70	-	-	-	-	6.4	8.1	9.7	11.2	12.7	14.2	15.7	17.0	18.4	19.7	20.9	22.3	23.9	25.4	27.0	28.5	30.0	31.5	33.0	34.4	35.9	37.3	38.7
71	-	-	-	-	5.6	7.3	8.9	10.5	12.1	13.6	15.0	16.4	17.8	19.1	20.3	21.7	23.3	24.9	26.4	28.0	29.5	31.0	32.5	34.0	35.4	36.9	38.3
72	-	-	-	-	-	6.4	8.1	9.8	11.4	12.9	14.4	15.8	17.2	18.5	19.7	21.2	22.8	24.3	25.9	27.4	29.0	30.5	32.0	33.5	35.0	36.5	37.9
73	-	-	-	-	-	5.6	7.3	9.0	10.7	12.2	13.7	15.2	16.6	17.9	19.2	20.6	22.2	23.8	25.4	26.9	28.5	30.0	31.5	33.1	34.6	36.0	37.5
74	-	-	-	-	-	-	6.5	8.2	9.9	11.5	13.1	14.5	15.9	17.3	18.6	20.0	21.6	23.2	24.8	26.4	28.0	29.5	31.1	32.6	34.1	35.6	37.1
75	-	-	-	-	-	-	5.6	7.4	9.2	10.8	12.4	13.9	15.3	16.7	18.0	19.4	21.1	22.7	24.3	25.9	27.5	29.1	30.6	32.2	33.7	35.2	36.7
76	-	-	-	-	-	-	-	6.6	8.4	10.1	11.7	13.2	14.7	16.1	17.4	18.9	20.5	22.1	23.8	25.4	27.0	28.6	30.1	31.7	33.3	34.8	36.3
77	-	-	-	-	-	-	-	5.7	7.5	9.3	11.0	12.5	14.0	15.4	16.8	18.3	20.0	21.6	23.2	24.9	26.5	28.1	29.7	31.3	32.8	34.4	36.0
78	-	-	-	-	-	-	-	-	6.7	8.5	10.2	11.8	13.4	14.8	16.2	17.7	19.4	21.1	22.7	24.4	26.0	27.6	29.2	30.8	32.4	34.0	35.6
79	-	-	-	-	-	-	-	-	5.9	7.7	9.5	11.1	12.7	14.2	15.6	17.1	18.8	20.5	22.2	23.8	25.5	27.1	28.8	30.4	32.0	33.6	35.2
80	-	-	-	-	-	-	-	-	-	6.9	8.7	10.4	12.0	13.5	15.0	16.6	18.3	20.0	21.7	23.3	25.0	26.7	28.3	29.9	31.6	33.2	34.8
81	-	-	-	-	-	-	-	-	-	6.0	7.9	9.7	11.3	12.9	14.3	16.0	17.7	19.4	21.1	22.8	24.5	26.2	27.9	29.5	31.2	32.8	34.4
82	-	-	-	-	-	-	-	-	-	5.2	7.1	8.9	10.6	12.2	13.7	15.4	17.2	18.9	20.6	22.3	24.0	25.7	27.4	29.1	30.7	32.4	34.0
83	-	-	-	-	-	-	-	-	-	-	6.3	8.2	9.9	11.6	13.1	14.9	16.6	18.4	20.1	21.8	23.5	25.2	26.9	28.6	30.3	32.0	33.7
84	-	-	-	-	-	-	-	-	-	-	5.5	7.4	9.2	10.9	12.5	14.3	16.1	17.8	19.6	21.3	23.0	24.8	26.5	28.2	29.9	31.6	33.3
85	-	-	-	-	-	-	-	-	-	-	-	6.6	8.5	10.3	11.9	13.7	15.5	17.3	19.0	20.8	22.6	24.3	26.0	27.8	29.5	31.2	32.9
86	-	-	-	-	-	-	-	-	-	-	-	5.8	7.8	9.6	11.3	13.2	15.0	16.7	18.5	20.3	22.1	23.8	25.6	27.3	29.1	30.8	32.6
87	-	-	-	-	-	-	-	-	-	-	-	5.0	7.0	8.9	10.6	12.6	14.4	16.2	18.0	19.8	21.6	23.4	25.1	26.9	28.7	30.4	32.2
88	-	-	-	-	-	-	-	-	-	-	-	-	6.3	8.2	10.0	12.0	13.9	15.7	17.5	19.3	21.1	22.9	24.7	26.5	28.3	30.1	31.8
89	-	-	-	-	-	-	-	-	-	-	-	-	5.5	7.5	9.4	11.5	13.3	15.1	17.0	18.8	20.6	22.4	24.3	26.1	27.9	29.7	31.5

Shaded area requires return plenum temperature of 70°F or higher.

Table RA3.2-2 Target Superheat (Suction Line Temperature - Evaporator Saturation Temperature)

Condenser Air Dry-Bulb Temperature (°F) (T condenser, db)	Return Air Wet-Bulb Temperature (°F) (T return, wb)																										
	50	51	52	53	54	55	56	57	58	59	60	61	62	63	64	65	66	67	68	69	70	71	72	73	74	75	76
90	-	-	-	-	-	-	-	-	-	-	-	-	-	6.8	8.8	10.9	12.8	14.6	16.5	18.3	20.1	22.0	23.8	25.6	27.5	29.3	31.1
91	-	-	-	-	-	-	-	-	-	-	-	-	-	6.1	8.1	10.3	12.2	14.1	15.9	17.8	19.7	21.5	23.4	25.2	27.1	28.9	30.8
92	-	-	-	-	-	-	-	-	-	-	-	-	-	5.4	7.5	9.8	11.7	13.5	15.4	17.3	19.2	21.1	22.9	24.8	26.7	28.5	30.4
93	-	-	-	-	-	-	-	-	-	-	-	-	-	-	6.8	9.2	11.1	13.0	14.9	16.8	18.7	20.6	22.5	24.4	26.3	28.2	30.1
94	-	-	-	-	-	-	-	-	-	-	-	-	-	-	6.2	8.7	10.6	12.5	14.4	16.3	18.2	20.2	22.1	24.0	25.9	27.8	29.7
95	-	-	-	-	-	-	-	-	-	-	-	-	-	-	5.6	8.1	10.0	12.0	13.9	15.8	17.8	19.7	21.6	23.6	25.5	27.4	29.4
96	-	-	-	-	-	-	-	-	-	-	-	-	-	-	-	7.5	9.5	11.4	13.4	15.3	17.3	19.2	21.2	23.2	25.1	27.1	29.0
97	-	-	-	-	-	-	-	-	-	-	-	-	-	-	-	7.0	8.9	10.9	12.9	14.9	16.8	18.8	20.8	22.7	24.7	26.7	28.7
98	-	-	-	-	-	-	-	-	-	-	-	-	-	-	-	6.4	8.4	10.4	12.4	14.4	16.4	18.3	20.3	22.3	24.3	26.3	28.3
99	-	-	-	-	-	-	-	-	-	-	-	-	-	-	-	5.8	7.9	9.9	11.9	13.9	15.9	17.9	19.9	21.9	24.0	26.0	28.0
100	-	-	-	-	-	-	-	-	-	-	-	-	-	-	-	5.3	7.3	9.3	11.4	13.4	15.4	17.5	19.5	21.5	23.6	25.6	27.7
101	-	-	-	-	-	-	-	-	-	-	-	-	-	-	-	-	6.8	8.8	10.9	12.9	15.0	17.0	19.1	21.1	23.2	25.3	27.3
102	-	-	-	-	-	-	-	-	-	-	-	-	-	-	-	-	6.2	8.3	10.4	12.4	14.5	16.6	18.6	20.7	22.8	24.9	27.0
103	-	-	-	-	-	-	-	-	-	-	-	-	-	-	-	-	5.7	7.8	9.9	11.9	14.0	16.1	18.2	20.3	22.4	24.5	26.7
104	-	-	-	-	-	-	-	-	-	-	-	-	-	-	-	-	5.2	7.2	9.3	11.5	13.6	15.7	17.8	19.9	22.1	24.2	26.3
105	-	-	-	-	-	-	-	-	-	-	-	-	-	-	-	-	-	6.7	8.8	11.0	13.1	15.2	17.4	19.5	21.7	23.8	26.0
106	-	-	-	-	-	-	-	-	-	-	-	-	-	-	-	-	-	6.2	8.3	10.5	12.6	14.8	17.0	19.1	21.3	23.5	25.7
107	-	-	-	-	-	-	-	-	-	-	-	-	-	-	-	-	-	5.7	7.9	10.0	12.2	14.4	16.6	18.7	21.0	23.2	25.4
108	-	-	-	-	-	-	-	-	-	-	-	-	-	-	-	-	-	5.2	7.4	9.5	11.7	13.9	16.1	18.4	20.6	22.8	25.1
109	-	-	-	-	-	-	-	-	-	-	-	-	-	-	-	-	-	-	6.9	9.1	11.3	13.5	15.7	18.0	20.2	22.5	24.7
110	-	-	-	-	-	-	-	-	-	-	-	-	-	-	-	-	-	-	6.4	8.6	10.8	13.1	15.3	17.6	19.9	22.1	24.4
111	-	-	-	-	-	-	-	-	-	-	-	-	-	-	-	-	-	-	5.9	8.1	10.4	12.6	14.9	17.2	19.5	21.8	24.1
112	-	-	-	-	-	-	-	-	-	-	-	-	-	-	-	-	-	-	5.4	7.6	9.9	12.2	14.5	16.8	19.1	21.5	23.8
113	-	-	-	-	-	-	-	-	-	-	-	-	-	-	-	-	-	-	-	7.2	9.5	11.8	14.1	16.4	18.8	21.1	23.5
114	-	-	-	-	-	-	-	-	-	-	-	-	-	-	-	-	-	-	-	6.7	9.0	11.4	13.7	16.1	18.4	20.8	23.2
115	-	-	-	-	-	-	-	-	-	-	-	-	-	-	-	-	-	-	-	6.2	8.6	10.9	13.3	15.7	18.1	20.5	22.9

RA3.3 *Field Verification and Diagnostic Testing of Forced Air System Airflow Rate, Fan Watt Draw, and Determination of Fan Efficacy.*

RA3.3 contains procedures for:

(a) Verification of improved system airflow rate (cfm) in ducted split system and packaged space conditioning systems serving low-rise residential buildings.

(b) Verification of reduced fan power (Watt) draw achieved through improved air distribution system design, including more efficient motors and ducts that have less resistance to airflow.

(c) Determination of fan efficacy (Watt/cfm) utilizing simultaneous measurement of system Watt draw and airflow rate.

RA3.3.1 Instrumentation Specifications

The instrumentation for the diagnostic measurements shall conform to the following specifications:

RA3.3.1.1 *Pressure Measurements*

All pressure measurements shall be performed with measurement systems (i.e., sensor plus data acquisition system) having an accuracy of ± 1% of pressure reading or ± 0.2 Pa (.0008 inches water) (whichever is greater). All pressure measurements within the duct system shall be made with static pressure probes such as Dwyer A303 or equivalent.

When required for compliance with Standards Section 150.0(m)13A, or when supply plenum pressure measurements are used for plenum pressure matching or flow grid measurements, a 5/16 inch (8 mm) diameter hole for a static pressure probe (HSPP) or a permanently affixed static pressure probe (PSPP) shall be provided as shown in Figure RA3.3-1.

When supply plenum pressure measurements are used for plenum pressure matching or flow grid measurements, the supply plenum pressure measurement shall be taken at the supply plenum measurement access location as shown in Figure RA3.3-1.

The hole location shown in Figure RA3.3-1 can be applied to any one of the four sides of the coil box or supply plenum. The hole location shall be labeled "Title 24 – Supply Plenum Measurement Access" in at least 12-point type.

Systems that cannot conform to the specifications for the hole location shown in Figure RA3.3-1 shall not be required to have holes as described in Figure RA3.3-1; however if supply plenum pressure measurements are required for compliance, an alternate location that provides access for making an accurate supply plenum pressure measurement shall be used.

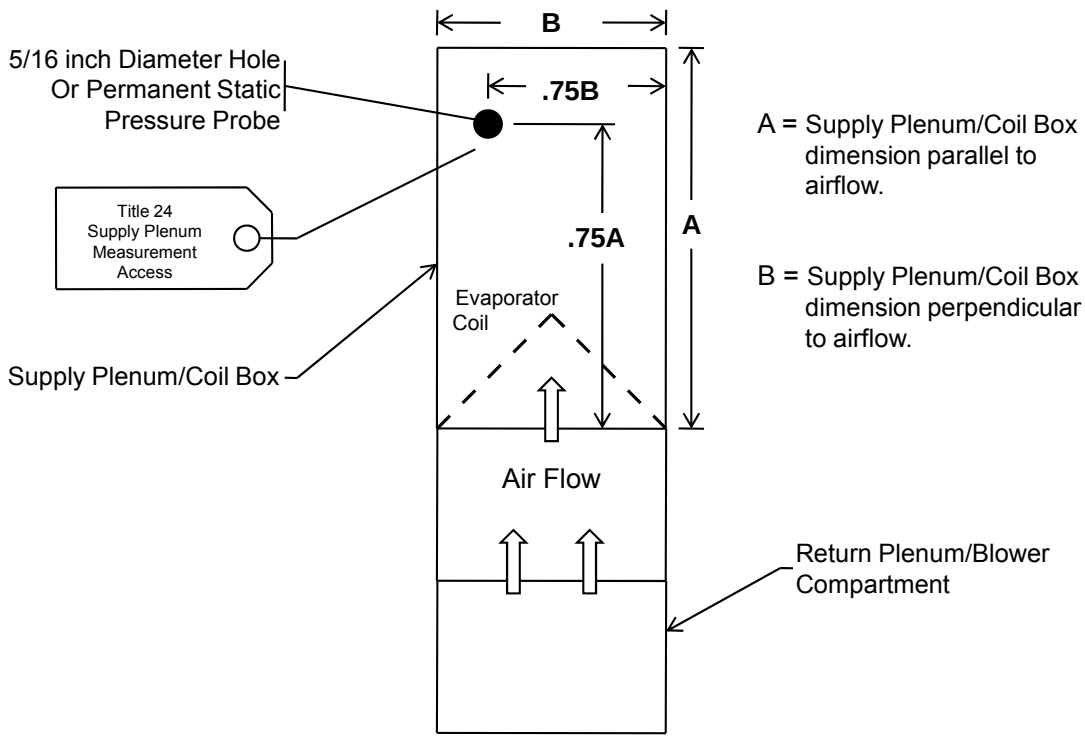

Figure RA3.3-1 Hole for the Placement of a Static Pressure Probe (HSPP)

or Permanently Installed Static Pressure Probe (PSPP)

RA3.3.1.2 ***Airflow Rate Measurements***

All measurements of system airflow rates shall be made with an airflow rate measurement apparatus (i.e., sensor plus data acquisition system) having an accuracy of ± 7% of reading or ± 5 cfm whichever is greater.

RA3.3.1.3 ***Fan Watt Draw Measurements***

All measurements of air handler Watt draws shall be made with true power measurement systems (i.e., sensor plus data acquisition system) having an accuracy of ± 2% of reading or ± 10 watts whichever is greater.

RA3.3.2 Apparatus

RA3.3.2.1 ***System Airflow Rate Measurement Apparatus***

Forced air system airflow rate shall be measured using one of the apparatuses listed in Section RA3.3.2. The apparatus shall produce airflow rate measurements that conform to the accuracy requirements specified in Section RA3.3.1.2 for measurements of residential forced air system airflow at system return grilles of single and multiple return duct systems.

The airflow rate measurement apparatus manufacturers shall publish in their product documentation, specifications for how their airflow measurement apparatuses are to be used for accurately measuring residential system airflow at system return grilles of single and multiple return duct systems.

The airflow measurement apparatus manufacturers shall certify to the Energy Commission that use of the apparatus in accordance with the specifications given in the manufacturer's product documentation will produce measurement results that are within the accuracy required by Section RA3.3.1.2.

For the airflow measurement apparatuses that are certified to the Commission as meeting the accuracy required by Section RA3.3.1.2, the following information will be posted on the Energy Commission website, making the information available to all people involved in the airflow verification compliance process:

(a) The product manufacturers' model numbers for the airflow measurement apparatuses.

(b) The product manufacturers' product documentation that gives the specifications for use of the airflow measurement apparatuses to accurately measure residential system airflow at system return grilles of single and multiple return duct systems.

A manufacturer's certification to the Commission of the accuracy of the airflow measurement apparatus, and submittal to the Commission of the product documentation that specifies the proper use of the airflow measurement apparatus to produce accurate airflow rate measurements shall be prerequisites for allowing the manufacturer's airflow measurement apparatus to be used for conducting the system airflow verification procedures in Section RA3.3 for demonstrating compliance with Part 6.

RA3.3.2.1.1 **Fan Flowmeter**

The apparatus for measuring the system airflow rate shall consist of a duct pressurization and airflow measurement device (subsequently referred to as a fan flowmeter) that meets all applicable instrumentation specifications in Section RA3.3.1, and a static pressure measurement device that meets the specifications in Section RA3.3.1.1. The fan flowmeter shall be attached at the inlet to a return duct from the conditioned space. If the system is not a multi-zoned automatic dampered system, the fan flowmeter may be attached at the air handler blower compartment door as an alternative to placement at the inlet to a return duct from conditioned space. The fan flowmeter shall be attached at a point where all the airflow through the system will flow through it. When the air handler blower compartment door attachment alternative is used, an air barrier must be placed between the return duct system and the air handler inlet(s). All registers shall be in their normal operating condition. The static pressure probe shall be fixed to the supply plenum at the location specified in Section RA3.3.1.1 so that it is not moved during this test.

RA3.3.2.1.2 **Flow Grid**

The apparatus for measuring the system airflow rate shall consist of a flow measurement device (subsequently referred to as a flow grid) that meets all applicable instrumentation specifications in RA3.3.1 and a digital pressure measurement device that meets the specifications in Section RA3.3.1.1. The flow grid shall be attached at a point where all the fan airflow will flow through the flow grid. All registers shall be in their normal operating condition. The static pressure probe shall be fixed to the supply plenum at the location specified in Section RA3.3.1.1 so that it is not moved during this test.

RA3.3.2.1.3 **Powered Flow Capture Hood**

A powered and pressure balanced flow capture hood (subsequently referred to as a Powered Flow Hood[1]) that has the capability to balance the flow capture static pressure difference between the room and the flow capture hood enclosure to 0.0 ± 0.2 Pa (.0008 inches water) and meets the applicable instrumentation specifications in Section RA3.3.1 may be used to verify the system airflow rate at the return grille(s) if the powered flow hood has a flow capture area at least as large as the return grille in all dimensions. The fan adjustment needed to balance the flow capture static pressure difference between the room and the flow capture hood enclosure to 0.0 ± 0.2 Pa (.0008 inches water) shall be provided by either an automatic control or a manual control operated in accordance with the apparatus manufacturer's instructions specified in the manufacturer's product documentation. All supply registers shall be in their normal operating position. Measurement(s) shall be taken at the return grille(s).

1 Also known as "active" flow hood, or "fan assisted" flow hood.

RA3.3.2.1.4 **Traditional Flow Capture Hood**

A traditional flow capture hood[2] meeting the applicable instrumentation specifications in Section RA3.3.1 may be used to verify the system airflow rate at the return grille(s) if the device has a capture area at least as large as the return grille in all dimensions. All registers shall be in their normal operating position. Measurement(s) shall be taken at the return grille(s).

RA3.3.2.2 ***Air Handler Watt Draw Measurement Apparatus***

The air handler watt draw shall be measured using one of the following apparatuses.

RA3.3.2.2.1 **Portable Watt Meter**

The apparatus for measuring the air handler watt draw shall consist of a wattmeter meeting the applicable instrumentation specifications in RA3.3.1. The measuring device shall be attached to measure the air handler fan watt draw. All registers and blower access panel(s) shall be in their normal operating condition.

RA3.3.2.2.2 **Utility Revenue Meter**

The apparatus for measuring the air handler watt draw shall consist of the utility revenue meter meeting the applicable instrumentation specifications in RA3.3.1 and a stopwatch that provides measurements in units of seconds. All registers and blower access panel(s) shall be in their normal operating condition.

RA3.3.2.2.3 **Digital Utility Revenue Meter**

The apparatus for measuring the air handler watt draw shall consist of the digital utility revenue meter meeting the applicable instrumentation specifications in RA3.3.1 that provides direct digital display of the Watt draw. All registers and blower access panel(s) shall be in their normal operating condition.

RA3.3.3 Procedures

RA3.3.3.1 ***System Airflow Rate Measurement Procedures***

When required for compliance, the installed system's airflow shall be diagnostically tested using one of the methods specified in this section.

For systems utilizing an intentional ducted ventilation airflow from outside the conditioned space into the return system, the outside airflow may be included in the system airflow if that flow occurs in all operating modes of the HVAC system.

For multi-zone systems the airflow must be measured for each and every operating mode of the system. This must be accomplished without bypasses from the supply ductwork to the return ductwork. All airflow measurements shall be performed with the fan set at the speed used for air conditioning.

Diagnostic system airflow rate measurement values shall be converted to fan cfm/ton by dividing the measured system airflow rate (Qah) by the nominal tons of condensing unit cooling capacity for the air conditioner.

The measured airflow rate shall be expressed in cubic feet per minute of standard air (standard air has a density of 0.075 lb/ft^3). When the airflow measurement is made at altitudes significantly different from sea level or at temperatures significantly different from 70°F, the airflow indicated on the device gauge may differ from the standard CFM by as much as 15 percent. Corrections from indicated to standard CFM shall be made using the procedure specified by the airflow measurement device manufacturer.

RA3.3.3.1.1 **System Airflow Rate Measurement Using Plenum Pressure Matching and Fan Flowmeter**

This system airflow measurement shall be performed using the following procedures:

2 also known as "non-powered" flow hood, "standard" flow hood, "commercially available" flow hood, or "passive" flow hood

(a) If the fan flowmeter is to be connected to the air handler outside the conditioned space, then the door or access panel between the conditioned space and the air handler location shall be opened.

(b) With the system fan on at the maximum speed used in the installation (the cooling speed when air conditioning is present), measure the pressure difference (in Pa) between the supply plenum and the conditioned space (Psp). Psp is the target pressure to be maintained during the system airflow tests. Place the pressure probe in the Supply Pressure Measurement Location described in Section RA3.3.1.1. Adjust the probe to achieve the highest pressure and then firmly attach the probe to ensure that it does not move during the system airflow test.

(c) If the fan flowmeter is to be connected to the air handler at the access, block the return duct system from the plenum upstream of the air handler fan and the fan flowmeter. Filters are often located in an ideal location for this blockage.

(d) Attach the fan flowmeter to the duct system at the inlet to one return duct from the conditioned space with the grille and filter removed (if there is more than one system return grille, block off all return grilles other than the one used for this measurement. Alternatively the fan flowmeter may be placed at the air handler.

(e) Turn on the system fan and the fan flowmeter, adjust the fan flowmeter until the pressure between supply plenum and conditioned space matches Psp.

(f) Record the flow through the fan flowmeter (Qah, cfm) - this is the diagnostic system airflow. In some systems, system fan and fan flowmeter combinations may not be able to produce enough flow to reach Psp. In this case record the maximum flow (Qmax, cfm) and pressure (Pmax) between the supply plenum and the conditioned space. The following equation shall be used to correct measured system flow and pressure (Qmax and Pmax) to operating condition at operating pressure (Psp).

Equation RA3.3-1 Air Handler Flow Qah = Qmax x (Psp/Pmax) ^0.5

RA3.3.3.1.2 System Airflow Rate Measurement Using Flow Grid

The system airflow measurement shall be performed using the following procedures:

(a) With the system fan on at the maximum speed used in the installation (the cooling speed when air conditioning is present), measure the pressure difference (in Pa) between the supply plenum and the conditioned space (Psp). Place the pressure probe in the Supply Pressure Measurement Location described in Section RA3.3.1.1. Adjust the probe to achieve the highest pressure and then firmly attach the probe to ensure that it does not move during the system airflow test.

(b) The flow grid shall be attached at a point where all the system air flows through the flow grid. If there are multiple return grilles in the duct system, flow grids may be used to measure airflow at the return grilles, but only by installing a flow grid in each return grill and making simultaneous measurements of all return grill airflows.

(c) Re-measure the system operating pressure with the flow grid in place.

(d) Measure the airflow through the flow grid (Qgrid) and the test pressure (Ptest). If multiple flow grids are used Qgrid is the sum of the flows through each of the flow grids.

(e) The following equation for air handler flow shall be used to correct flow through the flow grid and pressure (Qgrid and Ptest) to operating condition at operating pressure (Psp).

Equation RA3.3-2 Air Handler Flow Qah = Qgrid x (Psp/Ptest) ^0.5

RA3.3.3.1.3 System Airflow Rate Measurement Using Powered Flow Capture Hood

The system airflow measurement shall be performed using the following procedures; all registers shall be fully open, and the air filter shall be installed. Turn on the system fan at the cooling speed and measure the airflow at the return grille(s) with a calibrated powered flow hood to determine the total system return airflow. Operation of the powered flow hood shall conform to the specifications in the manufacturer's product documentation. For

multiple return systems, the total system return airflow (Qah, cfm) shall be the sum of the airflow measurements at each of the system's return grilles.

RA3.3.3.1.4 **System Airflow Rate Measurement Using Traditional Flow Capture Hood**

The system airflow measurement shall be performed using the following procedures; all registers shall be fully open, and the air filter shall be installed. Turn on the system fan at the cooling speed and measure the airflow at the return grille(s) with a calibrated traditional flow capture hood to determine the total system return airflow. For multiple return systems, the total system return airflow (Qah, cfm) shall be the sum of the airflow measurements at each of the system's return grilles.

RA3.3.3.2 ***Air Handler Fan Watt Draw Measurement Procedures***

The diagnostic air handler watt draw shall be measured using one of the following methods:

RA3.3.3.2.1 **Air Handler Watt Draw Measurement Using Portable Watt Meter**

The air handler watt draw measurement shall be performed using the following procedures; all registers shall be fully open, and the air filter shall be installed. Turn on the system fan at the maximum speed used in the installation (usually the cooling speed when air conditioning is present; usually the cooling speed with outdoor air introduction if ventilation is provided through the return duct system) and measure the fan watt draw (Wfan).

RA3.3.3.2.2 **Air Handler Watt Draw Measurement Using Utility Revenue Meter**

The air handler watt draw measurement shall be performed using the following procedures; all registers shall be fully open, and the air filter shall be installed. Turn on the system fan at the maximum speed used in the installation (usually the cooling speed when air conditioning is present; usually the cooling speed with outdoor air introduction if ventilation is provided through the return duct system) and turn off every circuit breaker except the one exclusively serving the air handler. Record the Kh factor on the revenue meter, count the number of full revolutions of the meter wheel over a period exceeding 90 seconds. Record the number of revolutions (Nrev) and time period (trev, seconds). Compute the air handler watt draw (Wfan) using the following formula:

Equation RA3.3-3 Air Handler Fan Watt Draw Wfan = (Kh x Nrev x 3600) / trev

Return all circuit breakers to their original positions.

RA3.3.3.2.3 **Air Handler Watt Draw Measurement Using Digital Utility Revenue Meter**

The air handler watt draw measurement shall be performed using the following procedures; all registers shall be fully open, and the air filter shall be installed. Turn on the system fan at the maximum speed used in the installation (usually the cooling speed when air conditioning is present; usually the cooling speed with outdoor air introduction if ventilation is provided through the return duct system) and turn off every circuit breaker except the one exclusively serving the air handler. Read the Watt draw from the digital utility meter digital display. Return all circuit breakers to their original positions.

RA3.3.3.3 ***Determination of Forced Air System Fan Efficacy***

Demonstrating compliance with fan efficacy requirements requires simultaneous measurement of the system airflow rate using Section RA3.3.3.1 procedures and fan Watt draw using Section RA3.3.3.2 procedures. The results of the simultaneous airflow rate and fan Watt draw measurements are used for calculation of a value for the forced air system fan efficacy as follows:

(a) The measured value for fan Watt draw (Watt) shall be divided by the measured value for airflow rate (cfm) to determine the fan efficacy (Watt/cfm).

RA3.3.3.4 *Determining Compliance with Fan Efficacy or System Airflow Requirements*

Compliance with the requirements for improved airflow or for improved fan efficacy both require simultaneous measurement of airflow and fan Watts. The simultaneous measurements shall be used to calculate the following values used to determine compliance:

RA3.3.3.4.1 **Airflow Calculation (cfm/ton)**

The measured value for airflow (cfm) shall be converted to cfm per ton by dividing the measured system airflow rate by the nominal tons of condensing unit cooling capacity for the air conditioner.

RA3.3.3.4.2 **Fan Efficacy Calculation (Watt/cfm)**

The measured value for fan Watt draw (Watt) shall be divided by the measured value for airflow rate (cfm) to determine the fan efficacy (Watt/cfm).

RA3.3.3.4.3 **Compliance Criteria**

In order to comply with either the fan efficacy requirement, or the system airflow requirement, the following criteria shall be met:

(a) The system airflow (cfm/ton) shall meet or exceed the system airflow compliance criteria specified in the Standards or on the Certificate of Compliance as applicable.

(b) The calculated value for fan efficacy (Watt/cfm) shall be equal to or less than the fan efficacy compliance criterion specified in the Standards or on the Certificate of Compliance as applicable, and

(c) Single zone air distribution systems with multi-speed compressor systems or variable speed compressor systems shall verify air flow (cfm/ton) and fan efficacy (Watt/cfm) for system operation in cooling mode at the maximum compressor speed and the maximum air handler fan speed.

(d) Zoned air distribution systems shall meet both the airflow (cfm/ton) and fan efficacy (Watt/cfm) criteria in every zonal control mode, except that multi-speed compressor systems or variable speed compressor systems shall only be required to verify air flow (cfm/ton) and fan efficacy (Watt/cfm) for system operation in cooling mode at maximum compressor capacity and maximum system fan speed and with all zones calling for conditioning.

RA3.4 *Field Verification of Installed HVAC System Components and Devices*

RA3.4.1 Purpose and Scope

The purpose of these procedures is to verify that residential space cooling systems and heat pumps have the required components to achieve the energy efficiency claimed in the compliance documents. The procedures apply when a Charge Indicator Display (CID) is specified for split system equipment, or when an EER or SEER higher than the default is claimed. For dwelling units with multiple systems, the procedures shall be applied to each system separately.

The installer shall certify on the Certificate of Installation that the components required for compliance have been installed.

RA3.4.2 Charge Indicator Display (CID) Verification Procedure

The CID verification procedure shall consist of visual inspection to confirm that the CID is installed on the system, and that the manufacturer has certified to the Energy Commission that the CID model meets the applicable requirements of Reference Joint Appendix JA6. In addition, the space conditioning system shall comply with the procedures specified in Sections RA3.4.2.1, or RA3.4.2.2, or RA3.4.2.3.

RA3.4.2.1 *Verification of installation of a CID with "self diagnostic reporting" functionality when outdoor air temperature is less than 55F*

The space conditioning system installer shall use the weigh-in charging procedure in Section RA3.2.3.1 to comply with refrigerant charge requirements. HERS verification compliance for the refrigerant charge requirement shall be satisfied by visual inspection to confirm the system has a CID installed, and confirming the installed CID "self diagnostic reporting function" indicates CID sensors and internal processes are operating within the CID device's specified design parameters.

RA3.4.2.2 *Verification of Installation of a CID that does not have "self diagnostic reporting" functionality when outdoor air temperature is less than 55F*

The space conditioning system installer shall use the weigh-in charging procedure in Section RA3.2.3.1 to comply with the refrigerant charge requirements, and HERS verification compliance for the refrigerant charge requirement shall be delayed until a time when the outdoor air temperature is equal to or greater than 55F, at which time the procedure in RA3.4.2.3 shall be performed.

RA3.4.2.3 *Verification of Installation of a CID when the outdoor air temperature is equal to or greater than 55F*

When the outdoor air temperature is warmer than 55F, the space conditioning system installer shall use either the standard charge verification procedure or the weigh-in charging procedure to comply with the refrigerant charge requirement, and HERS verification compliance for the refrigerant charge requirement shall be validation of the CID installation when the outdoor air temperature is warm enough for the installed CID to perform a valid refrigerant charge test according to the CID manufacturer specification. The HERS Rater verification shall consist of operating the air conditioner in cooling mode for at least 15 minutes and performing a visual inspection to verify the CID reports the system is operating within acceptable parameters, or otherwise reports a system fault. If the CID reports that there is a system fault, the system does not comply with the refrigerant charge verification requirement.

RA3.4.3 Time Delay Relay Verification Procedure

When a system rating specification includes a time delay relay, the installation of the time delay relay shall be verified.

The procedure shall be:

(a) Turn the thermostat down until the compressor and indoor fan are both running.

(b) Turn the thermostat up so the compressor stops running.

(c) Verify that the indoor fan continues to run for at least 30 seconds.

RA3.4.4 HVAC System Verification Procedures

This section defines procedures for field verification of installed HVAC systems.

RA3.4.4.1 *Rated Space Conditioning System Equipment Verification Procedure*

When installation of specific matched system equipment is necessary for compliance with requirements for higher than minimum values for system EER or SEER, the installed system equipment shall be verified by a HERS Rater. The verification shall utilize certified rating data from the AHRI Directory of Certified Product Performance at http://www.ahridirectory.org or another directory of certified product performance ratings approved by the Energy Commission for determining compliance.

The procedure shall consist of visual verification of installation of the following system equipment components and confirmation that the installed equipment matches the equipment required to achieve the required SEER or EER rating:

(a) The specified labeled make and model number of the outdoor unit.

(b) The specified labeled make and model number of the inside coil.

(c) The specified labeled make and model of the furnace or air handler when a specific furnace or air handler is necessary to achieve the SEER or EER rating,

(d) The specified metering device when a specific refrigerant metering device (such as a TXV or an EXV) is necessary to achieve the high efficiency rating.

(e) When a system rating specification includes a time delay relay, the installation of the time delay relay shall be verified according to the procedure in Section 3.4.3.

RA3.4.4.2 ***Reserved***

RA3.5 *Quality Insulation Installation Procedures*

RA3.5.1 Purpose and Scope

RA3.5 is a procedure for verifying the quality of insulation installation and air leakage control used in low-rise residential buildings. This procedure is to be followed by the insulation installer and a qualified Home Energy Rating System (HERS) rater must verify its conformance for meeting the requirements of Sections 150.1(c), and 110.7(a) and (b) of the Standards.

The procedure applies to wood and metal construction of framed and non-framed envelope assemblies. Framed assemblies include wall stud cavities, roof/ceiling assemblies, and floors typically insulated with: (1) batts of mineral fiber and mineral wool; (2) loose-fill materials of mineral fiber, mineral wool, and cellulose; (3) spray polyurethane foam; and, (4) rigid board sheathing materials. Non-framed assemblies include wall, roof/ceiling, and floors constructed of structural insulated panels and insulated concrete forms.

Note 1: This procedure applies to the entire thermal envelope of the building. In many instances, residential homes will use several types of insulation material, even in the same framed assembly. Each insulation material and the integrity of air leakage control for the building's entire thermal envelope must be verified by the HERS rater for the home to comply with the Standards.

Note 2: Structural bracing, tie-downs, and framing of steel or specialized framing used to meet structural requirements of the California Building Code (CBC) are allowed. These areas shall be called out on the building plans with diagrams and/or specific design drawings indicating the R-value amount and fastening method to be used. All structural framing areas shall be insulated in a manner that resists thermal bridging from the outside to the inside of the assembly separating conditioned from unconditioned space. The insulation and air barrier integrity shall be verified by the HERS rater.

RA3.5.2 Definitions

Continuous Air Barrier	A combination of interconnected materials and assemblies joined and sealed together to provide a continuous barrier to air leakage through the building envelope separating conditioned from unconditioned space, or adjoining conditioned spaces of different occupancies or uses. An air barrier is required in all thermal envelope assemblies to limit air movement between unconditioned/outside spaces and conditioned/inside spaces and must meet one of the following: 1. Using individual materials that have an air permeance not exceeding 0.004cfm/ft^2 under a pressure differential of 0.3in. w.g. (1.57psf) (0.02 L/s.m^2 at 75 pa) when tested in accordance with ASTM E2178; or 2. Using assemblies of materials and components that have an average air leakage not to exceed 0.04 cfm/ft2 under a pressure differential of 0.3 in. w.g (1.57psf) (0.2 L/s.m^2 at 75 pa)

	when tested in accordance with ASTM E2357, ASTM E1677, ASTM E1680 or ASTM E283; or 3. Testing the completed building and demonstrating that the air leakage rate of the building envelope does not exceed 0.40 cfm/ft^2 at a pressure differential of 0.3 in w.g. (1.57 psf) (2.0 L/s.m^2 at 75 pa) in accordance with ASTM E779 or an equivalent approved method. Individual materials and assemblies of materials that can demonstrate compliance with the air barrier testing requirements must be installed according to the manufacturer's instructions and a HERS rater shall verify the integrity of the installation. Below are example materials meeting the air permeance testing performance levels of 1 above. Manufacturers of these and other product types must provide a specification or product data sheet showing compliance to the ASTM testing requirements to be considered as an air barrier. -- Plywood – minimum 3/8 inch -- Oriented strand board – minimum. 3/8 inches -- Extruded polystyrene insulation board – minimum. ½ inch -- Foil-back polyisocyanurate insulation board – minimum. ½ inch -- Extruded polystyrene insulation board – minimum ½ inch -- Foil backed urethane foam insulation (1 inch) -- Closed cell spray polyurethane foam with a minimum density of 2.0 pcf and a minimum thickness of 2.0 inches -- Open cell spray polyurethane foam with a minimum density of 0.4 to1.5 pcf and a minimum thickness of 5½ inches -- Exterior or interior gypsum board - minimum 1/2 inch -- Cement board - minimum 1/2 inch -- Built up roofing membrane -- Modified bituminous roof membrane -- Particleboard-minimum1/2 inch -- Fully adhered single-ply roof membrane -- Portland cement/sand parge ,or gypsum plaster minimum 5/8 inch -- Cast-in-place and precast concrete. -- Fully grouted uninsulated and insulated concrete block masonry -- Sheet steel or aluminum
Air-tight	Limiting the passage of air either in or out of the building envelope. Note: Thermal envelope assemblies (such as wall assemblies) shall be built to minimize air movement. Air movement brings unconditioned air and moisture through or into the assembly. For these procedures, air-tight shall be defined as an assembly or air barrier with all openings caulked, or sealed with minimally expansive foam, or taping/sealing of adjoining surfaces of air barrier materials and assemblies.
Compression	Compacting of insulation in an assembly that results in elimination of the air pockets trapped in the material that gives the insulation its R-value per inch. Batt insulation should be “lofted” and loose-fill and spray foam material properly field applied to the manufacturer specified density to achieve its full R-value. Limited compression is allowed at plumbing, vents, and other obstructions and in cavities of non-standard framing. Compression of insulation in these situations by more than 50% is excessive and shall not be allowed.

Delaminated	Separation of the insulation's full thickness to facilitate it's installation around or between obstructions. Batt and blanket insulation are often split or delaminated to fit around electrical wires and plumbing runs through a wall cavity. The delamination must ensure that the full thickness of the insulation is installed between the obstruction and the finish material covering the framing. For example, an electrical wire located one-third of the distance from the front of the cavity should have batt insulation delaminated so that two-thirds of the batt is installed towards the outside wall surface and one-third is installed towards the inside wall surface from the wire.
Draft Stops	A material, device or construction installed to prevent the movement of air within open spaces of concealed areas of building components, such as crawl spaces, floor/ceiling assemblies, wall assemblies, roof/ceiling assemblies and attics. Note: Draft stops are important components of the air barrier and shall be air-tight. Fire blocks constructed of porous insulation materials cannot serve as draft stops since they are not air tight.
Friction Fit	A means of attaching insulation within the framed cavity without the use of mechanical fasteners such that the material's full thickness in all directions is sufficient to maintain its installation integrity. In standard framing dimensions of 2x4' and 2x6" @ 16" oc and 24" oc batt and blanket insulation materials have enough side-to-side frictional force to hold the insulation in place without any other means of attachment. Note: Friction fitting of faced batt and blanket insulation, with or without an attachment flange, is allowed provided the insulation's installation integrity can be maintained.
Gaps	Uninsulated areas at the edge of insulation where insulation is not in contact with framing members or other materials at the edge of the insulation. Gaps occur when insulation length and width is too short for the cavity. Gaps in insulation are avoidable and are not permitted.
Hard Covers	Building materials, such as plywood or gypboard, which become part of the ceiling air barrier. Note: Hard covers shall be installed above areas where there is a drop ceiling. For example, a home with 10ft ceilings may have an entry closet with a ceiling lowered to 8ft. In this case, a hard cover is installed at the 10ft level above the entry closet. Hard covers become part of the ceiling air barrier and shall be air-tight.
Inset Stapling	A method of attaching faced batt or blanket insulation to wood framing. The flange of the insulation facing is pushed inside the face of the framing member and stapled as opposed to In windy areas installers often staple the flanges of faced batts to the sides of the stud in order to assure that the insulation remains in place until covered with drywall, particularly on the wall between the house and the garage where there isn't any exterior sheathing to help keep the insulation in place. The void created by the flange inset shall not extend more than two inches from the stud on each side.
Insulation Types--framed assemblies	There are four basic types of insulation, or insulation "systems", installed in residential buildings and their use varies based on the design and type of construction: 1. **Batt and Blanket**: Batt and blanket insulation is made of mineral fiber and mineral wool -- either processed fiberglass, rock or slag wool -- and is used to insulate below floors, above ceilings, below roofs, and within walls. 2. **Loose-fill**: Loose-fill insulation includes loose fibers or fiber pellets that are blown into building cavities or attics using special equipment. Loose-fill insulations typically are produced using mineral fiber, mineral wool, or cellulose. They are installed in walls, floors, attics and below roofs using a dry-pack process or a moist-spray technique, and may include a netting material. 3. **Rigid Board**: Rigid board insulation sheathing is made from fiberglass, expanded polystyrene (EPS), extruded polystyrene (XPS), polyisocyanurate, or polyurethane. This type of insulation is used for above roof decks, exterior walls, cathedral ceilings, basement walls, as perimeter insulation at concrete slab edges, and to insulate special framing situations such as window and door headers, and around metal seismic bracing. Rigid board insulation may also

	be integral to exterior siding materials. 4. **Spray Polyurethane Foam (SPF)**: A two-part liquid foamed plastic (such as polyurethane or modified urethane) material formed by the reaction of an isocyanurate and a polyol that uses a blowing agent to develop a cellular structure when spray applied onto a substrate. SPF insulation is a two-component reactive system mixed at a spray gun or a single-component system that cures by exposure to humidity. The liquid is sprayed through a nozzle into wall, roof/ceiling, and floor cavities. SPF insulation can be formulated to have specific physical properties (i.e., density, compressive strength, fire resistance and R-value). There are two types of SPF insulation: a. *Low Density Open-Cell SPF (ocSPF) Insulation*: A spray applied polyurethane foam insulation having an open cellular structure resulting in an installed nominal density of 0.4 to 1.5 pounds per cubic foot (pcf). b. *Medium Density Closed-Cell SPF (ccSPF) Insulation*: A spray applied polyurethane foam insulation having a closed cellular structure resulting in an installed nominal density of greater than 1.5 to less than 2.5 pounds per cubic foot (pcf).
Insulation Types--non-framed assemblies	There are two basic types of insulation used and their use varies based on the design and type of construction: 1. **Structural Insulated Panel (SIP):** A composite building material consisting of an insulating layer of rigid polymer foam sandwiched between two layers of structural board. The board can be sheet metal, plywood, cement or oriented strand board (OSB) and the foam is either expanded polystyrene foam (EPS), extruded polystyrene foam (XPS) or polyurethane foam. SIPs combine several components of conventional building, such as studs and joists, insulation, vapor barrier and air barrier. They can be used for many different applications, such as exterior walls, roofs, floors, and foundation systems. 2. **Insulated Concrete Form (ICF):** A system of formwork for concrete that stays in place as permanent building insulation and is used for cast-in-place, reinforced above and below-grade concrete walls, floors, and roofs. ICFs are interlocking modular units that can be dry-stacked (without mortar) and filled with concrete as a single concrete masonry unit (CMU). ICFs lock together externally and have internal metal or plastic ties to hold the outer layer(s) of insulation to create a concrete form for the structural walls, roof/ceilings, or floors of a building. ICFs are manufactured from several materials including: expanded and extruded polystyrene foam, polyurethane foam, cement-bonded wood fiber, and cement-bonded polystyrene beads.
Minimally Expansive Foam Sealing Material	A single-component polyurethane foam system typically formulated in a handheld can or portable container to seal and fill construction gaps and crevasses, holes, and cracks without distorting adjacent framing. These materials are not used for insulation purposes, rather as agents for air sealing of gaps and crevasses that are too small to be insulated.
Net Free-Area	The net free-area of a vent cover is equal to the total vent opening less the interference to air flow caused by a screen or louver used for ventilation. Screened or louvered vent opening covers are typically marked by the manufacturer with the "net free-area." For example a 22.5 in. by 3.5 in. eave vent screen with a total area of 78.75 square inches may have a net free-area of only 45 square inches.
Voids & Air Spaces	An uninsulated space within an enclosed building assembly created where the assembly has been insulated by partial filling of the framed cavity. The partial fill results in an air space (void) between the insulation surface and the assembly's exterior or interior layers which form the assembly's air barrier.

RA3.5.3 BATT AND BLANKET INSULATION

These procedures detail the installation and inspection protocols necessary to qualify for Quality Insulation Installation (QII) of batt and blanket insulation. These procedures must be field verified before the building construction permit is finalized in order to claim QII energy compliance.

These procedures are to be followed by the insulation installer and a qualified Home Energy Rating System (HERS) rater must verify its conformance to meet the requirements of Sections 150.1(c), and 110.7(a) and (b) of the Standards.

RA3.5.3.1 *Thermal Specification*

This insulation type is manufactured in different widths, lengths, and thicknesses and is available with or without a facing. Faced batts and blanket insulation material are also available with or without an attachment flange. Specific product R-values are readily available from the manufacturer for the specific materials being installed and the R-value of the product is marked on the face of the product (faced or unfaced material). The installed insulation must meet the R-value stated on the compliance documentation.

RA3.5.3.1.1 **Requirements for Walls, Roof/Ceilings and Floors**

(a) Materials shall comply with, and be installed in conformance with, all applicable building codes for building. California Building Code (including, but not limited to, California Electric Code Section 719) and installed to meet all applicable fire codes.

(b) Materials shall meet California Quality Standards for Insulating Material, Title 24, Part 12, Chapter 4, Article 3, listed in the California Department of Consumer Affairs Consumer Guide and Directory of Certified Insulating Materials.

(c) Materials shall comply with flame spread rating and smoke density requirements of Chapter 26 and Section 706 of the Title 24, Part 2: all installations with exposed facings must use fire retardant facings which have been tested and certified not to exceed a flame spread of 25 and a smoke development rating of 450. Insulation facings that do not touch a ceiling, wall, or floor surface, and faced batts on the undersides of roofs with an air space between the ceiling and facing are considered exposed applications.

(d) Materials shall be installed according to manufacturer specifications and instructions.

(e) Batt and blanket insulation shall be correctly sized to fit snugly at the sides and ends.

(f) Batt and blanket insulation shall be installed so that they will be in contact with the air barrier.

(g) Where necessary, batt and blanket insulation shall be cut to fit properly - there shall be no gaps, nor shall the insulation be doubled-over or compressed.

(h) When batt and blanket insulation are cut to fit a non-standard cavity, they shall be snuggly fitted to fill the cavity without excessive compression.

(i) Batt and blanket insulation shall be cut to butt-fit around wiring and plumbing, or be split (delaminated) so that one layer can fit behind the wiring or plumbing, and one layer fit in front.

(j) For batts and blanket insulation that is taller than the trusses, full-width batts shall be used so that they expand to touch each other over the trusses.

(k) Hard covers or draft stops shall be placed over all drop ceiling areas and interior wall cavities to keep insulation in place and stop air movement. If hard covers or draft stops are missing or incomplete, they shall be completed before insulation is installed.

(l) Required eave ventilation shall not be obstructed - the net free-ventilation area of the eave vent shall be maintained.

(m) Eave vent baffles shall be installed to prevent air movement under or into the batt.

(n) Insulation shall cover all recessed lighting fixtures. If the fixtures are not rated for insulation cover (IC) and air tight, the fixtures shall be replaced.

All recessed light fixtures that penetrate the ceiling shall be listed for zero clearance insulation contact (IC), have a label that certifies it as airtight with leakage less than 2.0 cfm @ 75 Pa when tested to ASTM E283, and shall be sealed with a gasket or caulk between the light's housing and the ceiling.

RA3.5.3.1.2 **R-value Measurement Equipment**

The HERS rater shall verify the installed thickness of insulation in all assemblies and locations on walls, roof/ceilings, and floors, and to ensure that insulation levels and installation integrity meet the R-value specified on the Certificate of Compliance, and all other required compliance documentation.

RA3.5.3.1.3 **Certificates**

All provisions of Residential Appendix RA2 shall be met. An Insulation Certificate of Installation signed by the insulation installer shall be provided that states the installation is consistent with the plans and specifications for which the building permit was issued. The certificate shall also state the installing company name, insulation company and manufacturer's name and material identification, and the installed R-value. The insulation installer shall also complete the applicable sections of the Certificate of Installation form and attach a product specification or data sheet for every insulation material used.

RA3.5.3.1.4 **Certificates and Availability**

All provisions of Residential Appendix RA2 shall be met. The Insulation Certificate of Installation, with insulation material labels or specification/data sheets attached, signed by the insulation installer, shall be available on the building site for each of the HERS rater's verification inspections. Note: The HERS rater cannot verify compliance credit without these completed forms.

RA3.5.3.2 ***Wall Insulation***

(a) Wall stud cavities shall be caulked or foamed to provide a substantially air-tight envelope to the outdoors, attic, garage and crawl space. All plumbing and wiring penetrations through the top and bottom plates and electrical boxes that penetrate the sheathing shall be sealed. All gaps in the air barrier shall be caulked, taped, or sealed with minimally expansive foam.

(b) Bottom plates of framed and non-framed assemblies shall be sealed to the ground subfloor or slab, and above ground subfloor.

(c) Insulation shall uniformly fill the cavity side-to-side, top-to-bottom, and front-to-back.

(d) Batt insulation shall fill the cavity by friction fitting, inset or face stapling of flanges of faced batts, or by other support methods as necessary.

(e) Batt and blanket insulation shall be installed to fill the cavity and be in contact with the sheathing on the back and the wallboard on the front - no gaps or voids.

(f) Batts with flanges that are inset stapled to the side of the stud must be flush with the face of the cavity (or protrude beyond) except for the portion that is less than two inches from the edge of the stud.

(g) Non-standard-width cavities shall be filled with insulation fitted into the space without excessive compression.

(h) Batt insulation shall be cut to butt-fit around wiring and plumbing, or be split (delaminated) so that one layer can fit behind the wiring or plumbing, and one layer fit in front.

RA3.5.3.2.1 **Narrow-Framed Cavities**

(a) Non-standard width cavities shall be filled with insulation to snuggly fit into the space, or with minimally expansive foam sealing material.

(b) Narrow spaces less than 1 inch in width at windows and door jambs, shall be filled with minimally expansive foam sealing.

(c) Narrow spaces less than 2 inches in width, such as between studs at building corners, and at the intersection of interior partition walls to exterior walls, shall be filled with insulation snuggly fitted in the space, or with minimally expansive foam sealing.

RA3.5.3.2.2 **Special Situations--Installation Prior to Exterior Sheathing or Lath**

(a) Hard to access wall stud cavities, such as corner channels, wall intersections, and behind tub/shower enclosures shall be insulated to the proper R-value. In most cases this can only be completed prior to the installation of the tub/shower enclosure, the exterior sheathing, or the exterior stucco lath.

(b) An air barrier shall be installed on the inside of the exterior wall(s) directly adjacent to the tub/shower enclosure.

RA3.5.3.2.3 **Special Situations--Obstructions**

(a) Insulation shall be cut to fit around wiring and plumbing without compression.

(b) Insulation shall be placed between the sheathing and the rear of electrical boxes and phone boxes.

(c) In cold climates, where water pipes may freeze (such as Climate Zones 2, 11-14 and 16) pipes shall have at least 1/2 of the insulation between the water pipe and towards the outside surface of the exterior wall. If the pipe is closer to the exterior finish assembly layers, as much insulation as possible shall be placed between the pipe and the outside (without excessive compression), and remaining insulation shall be placed between the pipe and the interior assembly material.

RA3.5.3.2.4 **Special Situations--Rim Joists**

(a) All rim-joists shall be insulated to the same R-value as the adjacent walls.

(b) The insulation shall be installed without gaps, voids, or compression.

RA3.5.3.2.5 **Special Situations--Kneewalls, Skylight Shafts, and Gable Ends**

(a) Framing for kneewalls, skylight shafts and gable ends that separate conditioned from unconditioned space shall be insulated to meet or exceed the wall R-value specified on the Certificate of Compliance, and all other required compliance documentation.

(b) The insulation shall be installed without gaps and with minimal compression.

(c) For steel-framed kneewalls, skylight shafts, and gable ends, external surfaces of steel studs shall be covered with insulation unless otherwise specified on the Certificate of Compliance using correct U-factors from Joint Appendix JA4, Table 4.3.4 (or U-factors approved by the Commission Executive Director).

(d) The backside of air permeable insulation exposed to the unconditioned attic space shall be completely covered with rigid board insulation or an air barrier.

(e) The house side of the insulation shall be in contact with the drywall or other wall finish.

(f) The insulation shall be supported so that it will not fall down by either friction fitting to the framing, inset or face stapling of flanges, or using other support such as netting.

(g) Insulation for all kneewall and skylight shafts shall be completely enclosed by vertical and horizontal framing, including horizontal plates at top and bottom of the insulation.

(h) In unvented attics, where insulation is applied directly to the underside of the roof deck, kneewalls, skylight shafts, and gable ends shall be insulated to meet or exceed the wall R-value specified on the Certificate of Compliance, and all other required compliance documentation.

RA3.5.3.2.6 **Special Situations--HVAC/Plumbing Closet**

Walls of interior closets for HVAC and/or water heating equipment, which require combustion air venting, shall be insulated to the same R-value as the exterior walls as specified in compliance documentation.

RA3.5.3.2.7 **Special Situations--Double Walls and Framed Bump-Outs**

(a) Insulation shall fill the entire cavity; or, an additional air barrier shall be installed inside the double wall or bump-out and in contact with the insulation so that the insulation fills the cavity formed with the additional air barrier.

(b) Entire double walls and framed bump-outs shall be air-tight.

RA3.5.3.2.8 **Special Situations--Structural Bracing, Tie-downs, Steel Structural Framing**

(a) Framing and bracing used for structural purposes shall be identified on plan documents with diagrams and/or design drawings.

(b) Insulation shall be installed in a manner that restricts thermal bridging through the structural framing assembly.

(c) Insulation shall be applied to fully enclose and/or adhere to all sides and ends of structural assembly framing that separate conditioned from unconditioned space.

(d) The structural portions of assemblies shall be air-tight.

RA3.5.3.2.9 **Special Situations--Window and Door Headers**

All window and door headers shall be insulated to a minimum of R-2 between the exterior face of the header and inside surface of the finish wall material.

RA3.5.3.3 ***Roof/Ceilings***

(a) Batt and blanket insulation shall be correctly sized to fit snugly at the sides and ends.

(b) Batt and blanket insulation shall be installed to be in contact with the air barrier.

(c) Where necessary, batt and blanket insulation shall be cut to fit properly - there shall be no gaps, nor shall the insulation be doubled-over or compressed.

(d) When batt and blanket insulation are cut to fit a non-standard cavity, they shall be snuggly fitted to fill the cavity without compression.

(e) Batt and blanket insulation shall be cut to butt-fit around wiring and plumbing, or be split (delaminated) so that one layer can fit behind the wiring or plumbing, and one layer fit in front.

(f) Batt and blanket insulation that is thicker than truss depth shall be installed so that the insulation expands to touch adjoining cavity over each truss member.

(g) Hard covers or draft stops shall be placed over all drop ceiling areas and interior wall cavities to keep insulation in place and stop air movement. If hard covers or draft stops are missing or incomplete, they shall be completed before insulation is installed.

(h) Baffles shall be placed at eaves or soffit vents of vented attics to keep insulation from blocking eave ventilation and prevent air movement under the insulation. The required net free-ventilation shall be maintained.

(i) All recessed light fixtures that penetrate the ceiling shall be listed for zero clearance insulation contact (IC), have a label that certifies it as airtight with leakage less than 2.0 cfm @ 75 Pa when tested to ASTM E283, and shall be sealed with a gasket or caulk between the light's housing and the ceiling.

(j) Insulation shall cover all recessed lighting fixtures. Fixtures that are not rated for insulation cover (IC), and air-tight, shall be replaced.

RA3.5.3.3.1 **Special Situations--Enclosed Rafter Ceilings**

(a) An air space shall be maintained between the insulation and roof sheathing per California Building Code, Sections 1203.2 and R806.3, or as specified by the local building department.

(b) Facings and insulation shall be kept away from combustion appliance flues in accordance with flue manufacturers' installation instructions or labels on the flue.

(c) Insulation installed in unvented rafter ceilings or to the underside of unvented roofs with an attic below shall have an R-value conforming to compliance documentation and the air barrier shall be uniform across the transition of roof to wall. The insulation shall be in contact with the air barrier.

RA3.5.3.3.2 **Special Situations--Attics and Cathedral Ceilings**

In unvented attics, where insulation is applied directly to the underside of the roof deck, all gable ends shall be insulated to the same R-value as the exterior walls as specified in the compliance documentation.

RA3.5.3.3.3 **Special Situations--HVAC Platform**

(a) Batt and blanket insulation shall be placed below any platform or cat-walk for HVAC equipment installation and access.

(b) Batt and blanket insulation shall be installed so that they will be in contact with the air barrier.

RA3.5.3.3.4 **Special Situations--Attic Access**

Permanently attach rigid board insulation or batt or blanket insulation with the appropriate R-value to the access door using adhesive or mechanical fastener. The bottom of the attic access shall be gasketed to prevent air leakage of conditioned air to the unconditioned attic.

RA3.5.3.4 ***Raised Floors***

(a) Batt and blanket insulation shall be correctly sized to fit snugly at the sides and ends.

(b) Batt and blanket insulation shall be cut to fit properly without gaps. Insulation shall not be doubled-over or compressed.

(c) Batt and blanket insulation shall be in contact with the air barrier - usually the subfloor.

RA3.5.3.4.1 **Homes with Floors Over Garage**

(a) Batt and blanket insulation shall be correctly sized to fit snugly at the sides and ends, but not be so large as to buckle.

(b) Batt and blanket insulation shall be cut to fit properly without gaps. Insulation shall not be doubled-over or compressed.

(c) Batt and blanket insulation shall be in contact with the air barrier - usually the subfloor.

(d) On floors that are over garages, or where there is an air space between the insulation and the subfloor, the rim joist shall be insulated.

(e) Batt and blanket insulation shall be cut to butt-fit around wiring and plumbing, or be split (delaminated) so that one layer can fit behind the wiring or plumbing, and one layer fit in front.

(f) Faced batts or blankets shall be placed toward the living space and be in contact with the underside of the floor sheathing. Continuous support shall be provided to keep the facing in contact with the floor sheathing. The insulation shall be properly supported by stapling of flanges, netting or other method approved by the manufacturer for the product.

(g) Batt and blanket insulation shall be properly supported to avoid gaps, voids, and compression.

RA3.5.3.4.2 **Homes with Conditioned Space Over Garage**

The floor over the garage shall be insulated with batt or blanket insulation against the subfloor of the conditioned space. The garage and the adjacent conditioned space (house) shall be insulated up to the subfloor. All rim and band joists adjoining conditioned space shall be air tight and insulated.

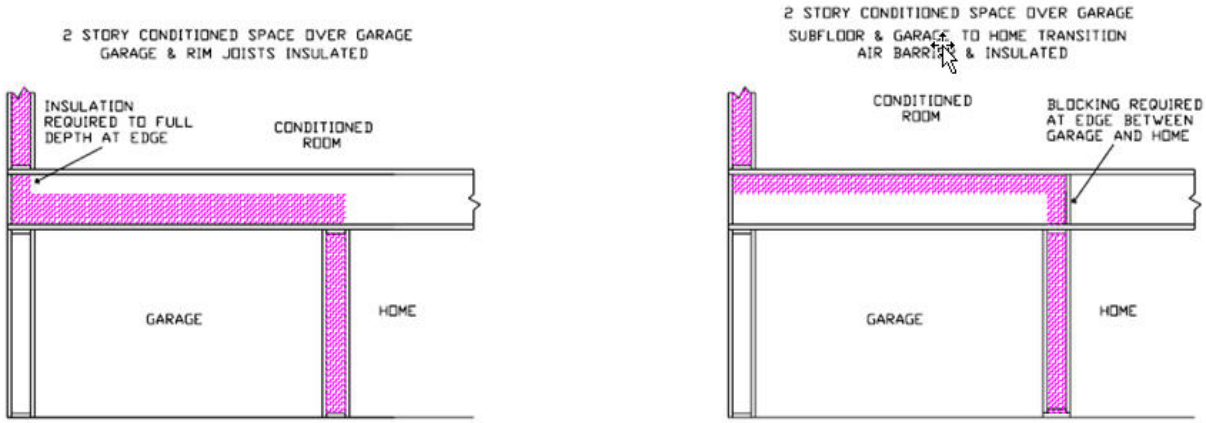

Figure RA3.5-1 Homes with Conditioned Space Over Garage – Batt and Blanket Insulation

RA3.5.3.4.3 **Homes with No Conditioned Space Over Garage**

The band joist where the garage transitions to an attic above conditioned space shall have an air barrier installed in contact with the edge of the attic insulation.

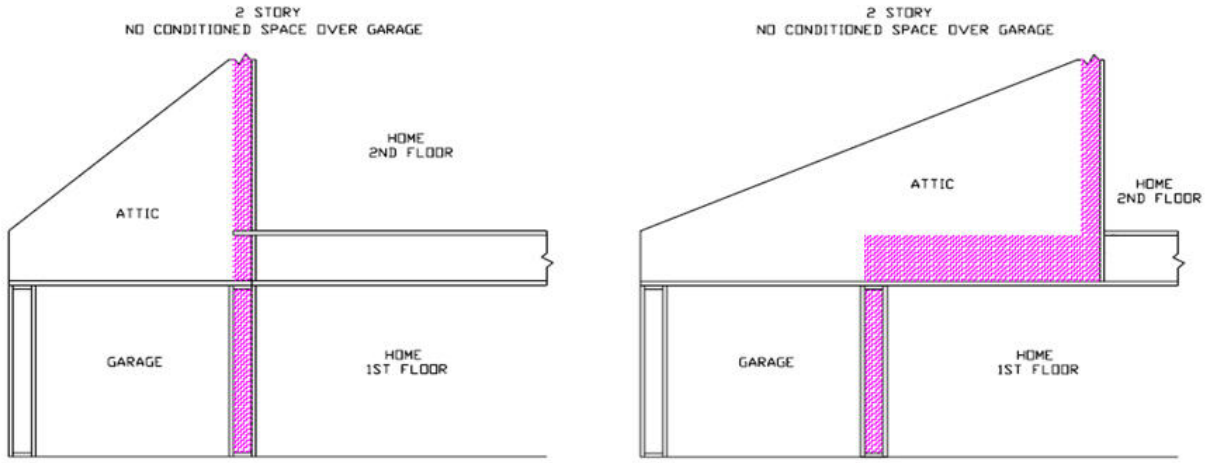

Figure RA3.5-2 Homes with No Conditioned Space Over Garage – Batt and Blanket Insulation

RA3.5.4 LOOSE FILL INSULATION

These procedures detail the installation and inspection protocols necessary to qualify for Quality Insulation Installation (QII) of loose-fill insulation. These procedures must be field verified before the building construction permit is finalized in order to claim QII energy compliance.

These procedures are to be followed by the insulation installer and a qualified Home Energy System (HERS) rater must verify conformance to meet the requirements of Sections 150.1(c) and 110.7(a) and (b) of the Standards.

RA3.5.4.1 *Thermal Specification*

This insulation type is manufactured to be blown or sprayed into framed cavity walls, floors, and ceilings. It is installed with or without a net depending on the loose-fill type or in special installations where netting is required, such as below a roof deck or under floors. Its overall R-value is dependent on the installed density and installed thickness. Specific product R-values are readily available from the manufacturer for the specific materials being installed. R-value and coverage chart of the product is typically marked on the bag which the insulation was drawn from and from the manufacturer's product data sheet or product specification information. The installed insulation must meet the R-value stated on the compliance documentation.

RA3.5.4.1.1 **Requirements for Walls, Roof/Ceilings and Floors**

(a) Materials shall comply with, and be installed in conformance with, all applicable building codes for building. California Building Code (including, but not limited to, California Electric Code Section 719) and installed to meet all applicable fire codes.

(b) Materials shall meet California Quality Standards for Insulating Material, Title 24, Part 12, Chapter 4, Article 3, listed in the California Department of Consumer Affairs Consumer Guide and Directory of Certified Insulating Materials.

(c) Materials shall comply with flame spread rating and smoke density requirements of Chapter 26 and Section 706 of the Title 24, Part 2: all installations with exposed facings must use fire retardant facings which have been tested and certified not to exceed a flame spread of 25 and a smoke development rating of 450. Insulation facings that do not touch a ceiling, wall, or floor surface, and faced batts on the undersides of roofs with an air space between the ceiling and facing are considered exposed applications.

(d) Materials shall be installed according to manufacturer specifications and instructions.

(e) Hard covers or draft stops shall be placed over all drop ceiling areas and interior wall cavities to keep insulation in place and stop air movement. If hard covers or draft stops are missing or incomplete, they shall be completed before insulation is installed.

(f) Required eave ventilation shall not be obstructed - the net free-ventilation area of the eave vent shall be maintained.

(g) Eave vent baffles shall be installed to prevent air movement under or into the batt.

(h) Insulation shall cover all recessed lighting fixtures. If the fixtures are not rated for insulation cover (IC) and air tight, the fixtures shall be replaced.

(i) All recessed light fixtures that penetrate the ceiling shall be listed for zero clearance insulation contact (IC), have a label that certifies it as airtight with leakage less than 2.0 cfm @ 75 Pa when tested to ASTM E283, and shall be sealed with a gasket or caulk between the light's housing and the ceiling.

(j) Loose-fill insulation shall be must completely fill the framed cavity.

(k) Loose-fill insulation shall be installed so that they will be in contact with the air barrier.

(l) Hard covers or draft stops shall be placed over all drop ceiling areas and interior wall cavities to keep insulation in place and stop air movement. If hard covers or draft stops are missing or incomplete, they shall be completed before insulation is installed.

(m) Required eave ventilation shall not be obstructed - the net free-ventilation area of the eave vent shall be maintained.

(n) Eave vent baffles shall be installed to prevent air movement under or into the batt.

(o) Insulation shall cover all recessed lighting fixtures. If the fixtures are not rated for insulation cover (IC) and air tight, the fixtures shall be replaced.

(p) All recessed light fixtures that penetrate the ceiling shall be listed for zero clearance insulation contact (IC), have a label that certifies it as airtight with leakage less than 2.0 cfm @ 75 Pa when tested to ASTM E283, and shall be sealed with a gasket or caulk between the light's housing and the ceiling.

RA3.5.4.1.2 **R-value Measurement Equipment**

The HERS rater shall measure the installed thickness and density of insulation in at least 6 random locations on walls, roof/ceilings and floors (i.e., 6 measurements per opaque surface type: wall, roof/ceiling or floor) to ensure minimum thickness levels and the installed density meets the R-value specified on the Certificate of Compliance, and all other required compliance documentation. For walls, measurement areas shall include low and high areas of the insulated assembly and the HERS rater shall verify density measurements are consistent with the manufacturer's coverage chart.

RA3.5.4.1.3 **Certificates**

(a) All provisions of Residential Appendix RA2 shall be met. An Insulation Certificate of Installation signed by the insulation installer shall be provided that states the installation is consistent with the plans and specifications for which the building permit was issued. The certificate shall also state the installing company name, insulation manufacturer's name and material identification, the installed R-value. The insulation installer shall complete the applicable sections of the Certificate of Installation form and attach a bag label or a manufacturer's coverage chart for every different type of loose-fill insulation material used.

(b) For loose-fill insulation, compliance information shall include the minimum installed weight-per-square-foot (or the minimum weight per cubic foot) consistent with the manufacturer's labeled installed-design-density for the desired R-value, and the number of inches required to achieve the desired R-value.

RA3.5.4.1.4 **Certificates and Availability**

All provisions of Residential Appendix RA2 shall be met. The Insulation Certificate of Installation, with insulation material bag labels or coverage charts attached, signed by the insulation installer, shall be available on the building site for each of the HERS rater's verification inspections. Note: The HERS rater cannot verify compliance credit without these completed forms.

RA3.5.4.2 ***Wall Insulation***

(a) Wall stud cavities shall be caulked or foamed to provide a substantially air-tight envelope to the outdoors, attic, garage and crawl space. Special attention shall be paid to plumbing and wiring penetrations through the top plates, electrical boxes that penetrate the sheathing, and the sheathing seal to the bottom plate. All gaps in the air barrier shall be caulked, or sealed with expansive or minimally expansive foam.

(b) Bottom plates of framed and non-framed assemblies shall be sealed to the ground subfloor or slab, and above ground subfloor.

(c) Insulation shall uniformly fill the cavity side-to-side, top-to-bottom, and front-to-back.

(d) Loose fill insulation shall be installed to fill the cavity and be in contact with the sheathing on the back and the wallboard on the front - no gaps or voids.

(e) Loose fill wall insulation shall be installed to fit around wiring, plumbing, and other obstructions.

(f) Non-standard-width cavities shall be filled with insulation fitted into the space without excessive compression.

(g) The installer shall certify on the Certificate of Installation forms that the manufacturer's minimum weight-per-square-foot requirement has been met.

RA3.5.4.2.1 **Narrow-Framed Cavities**

(a) Non-standard width cavities shall be filled with insulation to snuggly fit into the space, or with minimally expansive foam sealing material.

(b) Narrow spaces less than 1 inch in width at windows and door jambs, shall be filled with minimally expansive foam sealing.

(c) Narrow spaces less than 2 inches in width, such as between studs at building corners, and at the intersection of interior partition walls to exterior walls, shall be filled with insulation snuggly fitted in the space, or with minimally expansive foam sealing.

RA3.5.4.2.2 **Special Situations--Installation Prior to Exterior Sheathing or Lath**

(a) Hard to access wall stud cavities, such as; corner channels, wall intersections, and behind tub/shower enclosures shall be insulated to the proper R-value. In most cases this can only be completed prior to the installation of the tub/shower enclosure, the exterior sheathing, or the exterior stucco lath.

(b) An air barrier shall be installed on the inside of the exterior wall(s) directly adjacent to the tub/shower enclosure.

RA3.5.4.2.3 **Special Situations--Obstructions**

(a) Insulation shall completely fill around wiring and plumbing without compression.

(b) Insulation shall fill between the sheathing and the rear of electrical boxes and phone boxes.

(c) In cold climates, where water pipes may freeze (such as Climate Zones 2, 11-14 and 16) pipes shall have at least 1/2 of the insulation between the water pipe and towards the outside surface of the exterior wall. If the pipe is closer to the exterior finish assembly layers, as much insulation as possible shall be placed between the pipe and the outside (without excessive compression), and remaining insulation shall be placed between the pipe and the interior assembly material.

RA3.5.4.2.4 **Special Situations--Rim Joists**

(a) All rim-joists shall be insulated to the same R-value as the adjacent walls.

(b) The insulation shall be installed without gaps, voids, or excessive compression.

RA3.5.4.2.5 **Special Situations--Kneewalls, Skylight Shafts, and Gable Ends**

(a) Framing for kneewalls, skylight shafts and gable ends that separate conditioned from unconditioned space shall be insulated to meet or exceed the wall R-value specified on the Certificate of Compliance, and all other required compliance documentation.

(b) The insulation shall be installed without gaps and with minimal compression.

(c) For steel-framed kneewalls, skylight shafts, and gable ends, external surfaces of steel studs shall be covered with insulation unless otherwise specified on the Certificate of Compliance using correct U-factors from Joint Appendix JA4, Table 4.3.4 (or U-factors approved by the Commission Executive Director).

(d) The backside of air permeable insulation exposed to the unconditioned attic space shall be completely covered with rigid board insulation or an air barrier.

(e) The house side of the insulation shall be in contact with the drywall or other wall finish.

(f) The insulation shall be supported so that it will not fall down by using support such as netting.

(g) Insulation for all kneewall and skylight shafts shall be completely enclosed by vertical and horizontal framing, including horizontal plates at top and bottom of the insulation.

(h) In unvented attics, where insulation is applied directly to the underside of the roof deck, kneewalls, skylight shafts, and gable ends shall be insulated to meet or exceed the wall R-value specified on the Certificate of Compliance, and all other required compliance documentation.

RA3.5.4.2.6 **Special Situations--HVAC/Plumbing Closet**

Walls of interior closets for HVAC and/or water heating equipment, which require combustion air venting, shall be insulated to the same R-value as the exterior walls as specified in compliance documentation.

RA3.5.4.2.7 **Special Situations--Double Walls and Framed Bump-Outs**

(a) Insulation shall fill the entire cavity; or, an additional air barrier shall be installed inside the double wall or bump-out and in contact with the insulation so that the insulation fills the cavity formed with the additional air barrier.

(b) Entire double walls and framed bump-outs shall be air-tight.

RA3.5.4.2.8 **Special Situations--Structural Bracing, Tie-downs, Steel Structural Framing**

(a) Framing and bracing used for structural purposes shall be identified on plan documents with diagrams and/or design drawings.

(b) Insulation shall be installed in a manner that restricts thermal bridging through the structural framing assembly.

(c) Insulation shall be applied to fully enclose and/or adhere to all sides and ends of structural assembly framing that separate conditioned from unconditioned space.

(d) The structural portions of assemblies shall be air-tight.

RA3.5.4.2.9 **Special Situations--Window and Door Headers**

All window and door headers shall be insulated to a minimum of R-2 between the exterior face of the header and inside surface of the finish wall material.

RA3.5.4.3 ***Roof/Ceilings***

(a) Hard covers or draft stops shall be placed over all drop ceiling areas and interior wall cavities to keep insulation in place and stop air movement. If hard covers or draft stops are missing or incomplete, they shall be completed before insulation is installed or the entire drop area shall be filled with loose-fill insulation level with the rest of the attic.

(b) Baffles shall be placed at eaves or soffit vents of vented attics to keep insulation from blocking eave ventilation and prevent air movement under the insulation. The required net free-ventilation shall be maintained.

(c) Attic rulers appropriate to the material shall be installed and evenly distributed throughout the attic to verify depth: one ruler for every 250 square feet and clearly readable from the attic access. Attic rulers shall be scaled to read inches of insulation and the R-value installed.

(d) Insulation shall be applied underneath and on both sides of obstructions such as cross-bracing and wiring.

(e) Insulation shall be applied all the way to the outer edge of the wall top plate.

(f) All recessed light fixtures that penetrate the ceiling shall be listed for zero clearance insulation contact (IC), have a label that certifies it as airtight with leakage less than 2.0 cfm @ 75 Pa when tested to ASTM E283, and shall be sealed with a gasket or caulk between the light's housing and the ceiling.

(g) Insulation shall cover recessed lighting fixtures. Fixtures that are not rated for insulation cover (IC), and air tight, shall be replaced.

(h) Insulation shall be kept away from combustion appliance flues in accordance with flue manufacturer's installation instructions or labels on the flue.

(i) Insulation shall be blown to a uniform thickness throughout the attic with all areas meeting or exceeding the insulation manufacturer's minimum requirements for depth and weight-per-square-foot.

(j) The installer shall certify on the Certificate of Installation forms that the manufacturer's minimum weight-per-square-foot requirement has been met.

(k) The HERS rater shall verify that the manufacturer's minimum weight-per-square-foot requirement has been met for attics insulated with loose-fill insulation. Verification shall be determined using the methods of the Insulation Contractor's Association of America (ICAA) Technical Bulletin #17 or #33 except that only one sample shall be taken in the area that appears to have the least amount of insulation. The rater shall record the weight-per-square-foot of the sample on the Certificate of Verification.

(l) The HERS rater shall verify that the manufacturer's minimum insulation thickness has been installed. For cellulose insulation, this verification shall take into account the time that has elapsed since the insulation was installed. At the time of installation, the insulation shall be greater than or equal to the manufacturer's minimum initial insulation thickness. If the HERS rater does not verify the insulation thickness at the time of installation, and if the insulation has been in place less than seven days, the insulation thickness shall be greater than the manufacturer's minimum required thickness to achieve the given R-value at the time of installation, less 1/2 inch to account for settling. If the insulation has been in place for seven days or more, the insulation thickness shall be greater than or equal to the manufacturer's minimum required settled thickness to achieve the given R-value.

RA3.5.4.3.1 **Special Situations--Enclosed Rafter Ceilings**

(a) An air space shall be maintained between the insulation and roof sheathing per California Building Code Sections 1203.2 and R806.2, or as specified by the local building department.

(b) Insulation shall be kept away from combustion appliance flues in accordance with flue manufacturers' installation instructions or labels on the flue.

(c) Insulation installed in unvented rafter ceilings or to the underside of unvented roofs with an attic below shall have an R-value conforming to compliance documentation and the air barrier shall be uniform across the transition of roof to wall. The insulation shall be in contact with the air barrier.

RA3.5.4.3.2 **Special Situations--Attics and Cathedral Ceilings**

In unvented attics, where insulation is applied directly to the underside of the roof deck, all gable ends shall be insulated to the same R-value as the exterior walls as specified in the compliance documentation.

RA3.5.4.3.3 **Special Situations--HVAC Platform**

(a) Loose-fill insulation shall be placed below any platform or cat-walk for HVAC equipment installation and access.

(b) Loose-fill insulation shall be installed so that it will be in contact with the air barrier.

RA3.5.4.3.4 **Special Situations--Attic Access**

Permanently attach rigid board insulation or batt or blanket insulation with the appropriate R-value to the access door using adhesive or mechanical fastener. The bottom of the attic access shall be gasketed to prevent air leakage of conditioned air to the unconditioned attic.

RA3.5.4.4 ***Raised Floors***

(a) Loose-fill insulation shall be in contact with the air barrier - usually the subfloor.

(b) Loose-fill insulation shall completely fill around wiring and plumbing.

(c) Loose-fill insulation shall be properly supported where necessary to avoid sagging, gaps, voids, and compression.

RA3.5.4.4.1 **Homes with Floors Over Garage**

(a) Loose-fill insulation shall be in contact with the air barrier - usually the subfloor.

(b) On floors that are over garages, or where there is an air space between the insulation and the subfloor, the rim joist shall be insulated.

(c) Loose-fill insulation shall completely fill around wiring and plumbing.

(d) Loose-fill insulation shall be properly supported to avoid sagging, gaps, voids, and compression.

RA3.5.4.4.2 **Homes with Conditioned Space Over Garage**

The floor over the garage shall be insulated with fully supported loose-fill insulation against the subfloor of the conditioned space. The garage and the adjacent conditioned space (house) shall be insulated up to the subfloor. All rim and band joists adjoining conditioned space shall be air tight and insulated.

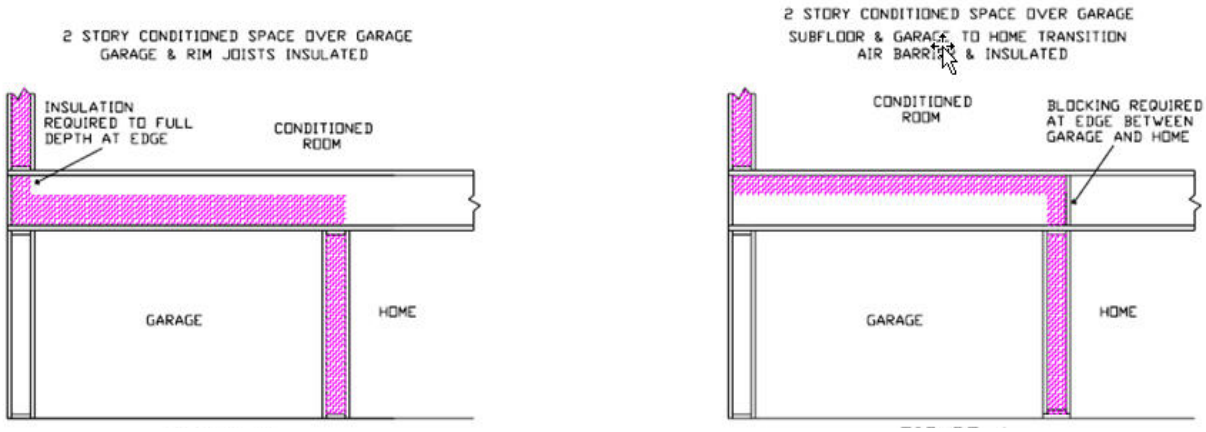

Figure RA3.5-3 Homes with Conditioned Space Over Garage – Loose Fill Insulation

RA3.5.4.4.3 **Homes with No Conditioned Space Over Garage**

The band joist where the garage transitions to an attic above conditioned space shall have an air barrier installed in contact with the edge of the attic insulation.

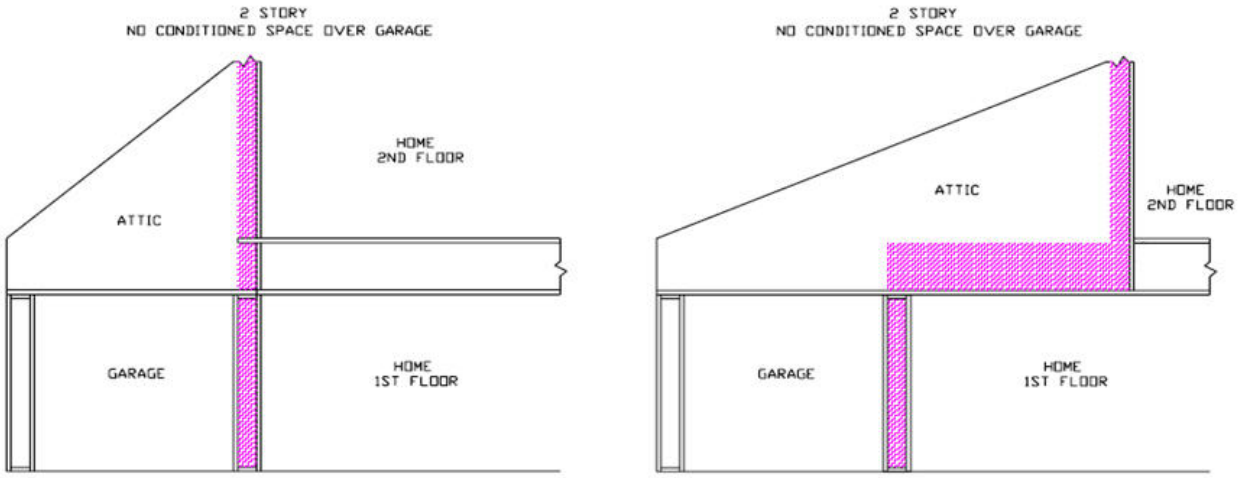

Figure RA3.5-4 Homes with No Conditioned Space over Garage – Loose Fill Insulation

RA3.5.5 RIGID BOARD INSULATION

These procedures detail the installation and inspection protocols necessary to qualify for Quality Insulation Installation (QII) of rigid board insulation sheathing material. These procedures must be field verified before the building construction permit is finalized in order to claim QII energy compliance.

These procedures are to be followed by the insulation installer and a qualified Home Energy Rating System (HERS) rater must verify its conformance for meeting the requirements of Sections 150.1(c) and 110.7(a) and (b) of the Standards.

RA3.5.5.1 *Thermal Specification*

This insulation type is manufactured of different materials and is in sheet or board form. Rigid board insulation materials are typically used on the exterior side of framed wall assemblies and over the top of exterior roof decks. These products also may be used for special situations in rafter spaces of cathedral ceilings, floors, at floor rim joists, and within or on the outside of window and door headers. This insulation type may also be integral to exterior siding materials. Rigid board insulation material most often is used in conjunction with other insulation materials installed within the framed cavity. The R-value is dependent on the type of material and its thickness. Specific product R-values are readily available from the manufacturer for the specific materials being installed. R-value of the product is typically marked on the product. The installed insulation must meet the R-value stated on the compliance documentation.

RA3.5.5.1.1 **Requirements for Walls, Ceilings and Floors**

(a) Materials shall comply with, and be installed in conformance with, all applicable building codes for building. California Building Code (including, but not limited to, California Electric Code Section 719) and installed to meet all applicable fire codes.

(b) Materials shall meet California Quality Standards for Insulating Material, Title 24, Part 12, Chapter 4, Article 3, listed in the California Department of Consumer Affairs Consumer Guide and Directory of Certified Insulating Materials.

(c) Materials shall comply with flame spread rating and smoke density requirements of Chapter 26 and Section 706 of the Title 24, Part 2: all installations with exposed facings must use fire retardant facings which have been tested and certified not to exceed a flame spread of 25 and a smoke development rating of 450. Insulation facings that do not touch a ceiling, wall, or floor surface, and faced batts on the undersides of roofs with an air space between the ceiling and facing are considered exposed applications.

(d) Materials shall be installed according to manufacturer specifications and instructions.

(e) Rigid board insulation shall be attached according to the manufacturer's specifications.

(f) Rigid board insulation may be used as the air barrier provided it has been tested to conform to the air barrier performance conditions of the Standards.

(g) Hard covers or draft stops shall be placed over all drop ceiling areas and interior wall cavities to keep insulation in place and stop air movement. If hard covers or draft stops are missing or incomplete, they shall be completed before insulation is installed.

(h) Required eave ventilation shall not be obstructed - the net free-ventilation area of the eave vent shall be maintained.

(i) Eave vent baffles shall be installed to prevent air movement under or into the ceiling insulation.

(j) Insulation shall cover all recessed lighting fixtures. If the fixtures are not rated for insulation cover (IC) and air tight, the fixtures shall be replaced.

(k) All recessed light fixtures that penetrate the ceiling shall be listed for zero clearance insulation contact (IC), have a label that certifies it as airtight with leakage less than 2.0 cfm @ 75 Pa when tested to ASTM E283, and shall be sealed with a gasket or caulk between the light's housing and the ceiling.

RA3.5.5.1.2 **R-value Measurement Equipment**

The HERS raters shall verify the installed thickness of insulation in all assemblies and locations on walls, roof/ceilings, and floors, and to ensure that insulation levels and installation integrity meet the R-value specified on the Certificate of Compliance, and all other required compliance documentation.

RA3.5.5.1.3 **Certificates**

All provisions of Residential Appendix RA2 shall be met. An Insulation Certificate of Installation signed by the insulation installer shall be provided that states the installation is consistent with the plans and specifications for which the building permit was issued. The certificate shall also state the installing company name, insulation manufacturer's name and material identification, and the installed R-value. The insulation installer shall also complete the applicable sections of the Certificate of Installation form and attach a product specification or data sheet for every insulation material used.

RA3.5.5.1.4 **Certificates and Availability**

All provisions of Residential Appendix RA2 shall be met. The Insulation Certificate of Installation, with insulation material labels or specification/data sheets attached, signed by the insulation installer, shall be available on the building site for each of the HERS rater's verification inspections. Note: The HERS rater cannot verify compliance credit without these completed forms.

RA3.5.5.2 ***Wall Insulation***

(a) Wall stud cavities shall be caulked or foamed to provide a substantially air-tight envelope to the outdoors, attic, garage and crawl space. All plumbing and wiring penetrations through the top and bottom plates and electrical boxes that penetrate the sheathing shall be sealed. All gaps in the air barrier shall be caulked, or sealed with minimally expansive foam.

(b) Bottom plates of framed and non-framed assemblies shall be sealed to the ground subfloor or slab, and above ground subfloor.

(c) Installation shall uniformly fit across the plane of the wall and taping and/or caulking of all joints and seams of the insulation shall be maintained to be considered as the air barrier.

RA3.5.5.2.1 **Narrow-Framed Cavities**

(a) Non-standard with cavities shall be filled with insulation to snuggly fit into the space, or with minimally expansive foam sealing material.

(b) Narrow spaces less than 1 inch in width at windows and door jambs, shall be filled with minimally expansive foam sealing material.

(c) Narrow spaces less than 2 inches in width, such as between studs at building corners, and at the intersection of interior partition walls to exterior walls, shall be filled with insulation snuggly fitted in the space, or with minimally expansive foam sealing.

RA3.5.5.2.2 **Special Situations--Installation Prior to Exterior Sheathing or Lath**

(a) Hard to access wall stud cavities, such as corner channels, wall intersections, and behind tub/shower enclosures shall be insulated to the proper R-value. In most cases this can only be completed prior to the installation of the tub/shower enclosure, the exterior sheathing, or the exterior stucco lath.

(b) An air barrier shall be installed on the inside of the exterior wall(s) directly adjacent to the tub/shower enclosure.

RA3.5.5.2.3 **Special Situations--Obstructions**

(a) Penetrations and obstructions to the insulation shall be completely caulked and sealed.

(b) Insulation shall fill between the sheathing and the rear of electrical boxes and phone boxes.

RA3.5.5.2.4 **Special Situations--Rim Joists**

(a) All rim-joists shall be insulated to the same R-value as the adjacent walls.

(b) The insulation shall be installed without gaps and voids.

RA3.5.5.2.5 **Special Situations--Kneewalls, Skylight Shafts and Gable Ends**

(a) Framing for kneewalls, skylight shafts and gable ends that separate conditioned from unconditioned space shall be insulated to meet or exceed the wall R-value specified on the Certificate of Compliance, and all other required compliance documentation.

(b) For steel-framed kneewalls, skylight shafts, and gable ends, external surfaces of steel studs shall be covered with insulation unless otherwise specified on the Certificate of Compliance using correct U-factors from Joint Appendix JA4, Table 4.3.4 (or U-factors approved by the Commission Executive Director).

(c) The backside of air permeable insulation exposed to the unconditioned attic space shall be completely covered with rigid board insulation or an air barrier.

RA3.5.5.2.6 **Special Situations--HVAC/Plumbing Closet**

Walls of interior closets for HVAC and/or water heating equipment, which require combustion air venting, shall be insulated to the same R-value as the exterior walls as specified in compliance documentation.

RA3.5.5.2.7 **Special Situations--Double Walls and Framed Bump-Outs**

(a) Insulation shall fill the entire cavity; or, an additional air barrier shall be installed inside the double wall or bump-out and in contact with the insulation so that the insulation fills the cavity formed with the additional air barrier.

(b) Entire double walls and framed bump-outs shall be air-tight.

RA3.5.5.2.8 **Special Situations--Structural Bracing, Tie-downs, Steel Structural Framing**

(a) Framing and bracing used for structural purposes shall be identified on plan documents with diagrams and/or design drawings.

(b) Insulation shall be installed in a manner that restricts thermal bridging through the structural framing assembly.

(c) Insulation shall be applied to fully enclose and/or adhere to all sides and ends of structural assembly framing that separate conditioned from unconditioned space.

(d) The structural portions of assemblies shall be air-tight.

RA3.5.5.2.9 **Special Situations--Window and Door Headers**

(e) All window and door headers shall be insulated to a minimum of R-2 between the exterior face of the header and inside surface of the finish wall material.

RA3.5.5.3 ***Roof/Ceilings***

(a) Baffles shall be placed at eaves or soffit vents of vented attics to keep insulation from blocking eave ventilation and prevent air movement under the insulation. The required net free-ventilation shall be maintained.

(b) Hard covers or draft stops shall be placed over all drop ceiling areas and interior wall cavities to keep insulation in place and stop air movement. If hard covers or draft stops are missing or incomplete, they shall be completed before insulation is installed.

(c) Rigid board insulation installed above the roof deck shall be applied to the outer edge of the plane of the wall top plate.

RA3.5.5.3.1 **Special Situations--Enclosed Rafter Ceilings**

(a) An air space shall be maintained between the insulation and roof sheathing per California Building Code Section 1203.2 and R806.2, or as specified by the local building department.

(b) Insulation installed in unvented rafter ceilings or to the underside of unvented roofs with an attic below shall have an R-value conforming to compliance documentation and the air barrier shall be uniform across the transition of roof to wall. The insulation shall be in contact with the air barrier.

RA3.5.5.3.2 **Special Situations--Attics and Cathedral Ceilings**

In unvented attics, where insulation is applied directly to the underside of the roof deck, all gable ends shall be insulated to the same R-value as the exterior walls as specified in the compliance documentation.

RA3.5.5.3.3 **Special Situations--HVAC Platform**

Insulation shall be placed below any platform or cat-walk for HVAC equipment installation and access.

RA3.5.5.3.4 **Special Situations--Attic Access**

Permanently attach rigid board insulation or batt or blanket insulation with the appropriate R-value to the access door using adhesive or mechanical fastener. The bottom of the attic access shall be gasketed to prevent air leakage of conditioned air to the unconditioned attic.

RA3.5.5.4 ***Raised Floors***

Rigid board insulation shall be in contact with the air barrier - usually the subfloor.

RA3.5.5.4.1 **Homes with Floors Over Garage**

(a) Rigid board insulation shall be in contact with the air barrier - usually the subfloor.

(b) On floors that are over garages, or where there is an air space between the insulation and the subfloor, the rim joist shall be insulated.

RA3.5.5.4.2 **Homes with Conditioned Space Over Garage**

The floor over the garage shall be fully insulated with fully supported rigid board insulation against the subfloor of the conditioned space. The garage and the adjacent conditioned space (house) shall be insulated up to the subfloor. All rim and band joists adjoining conditioned space shall be air tight and insulated.

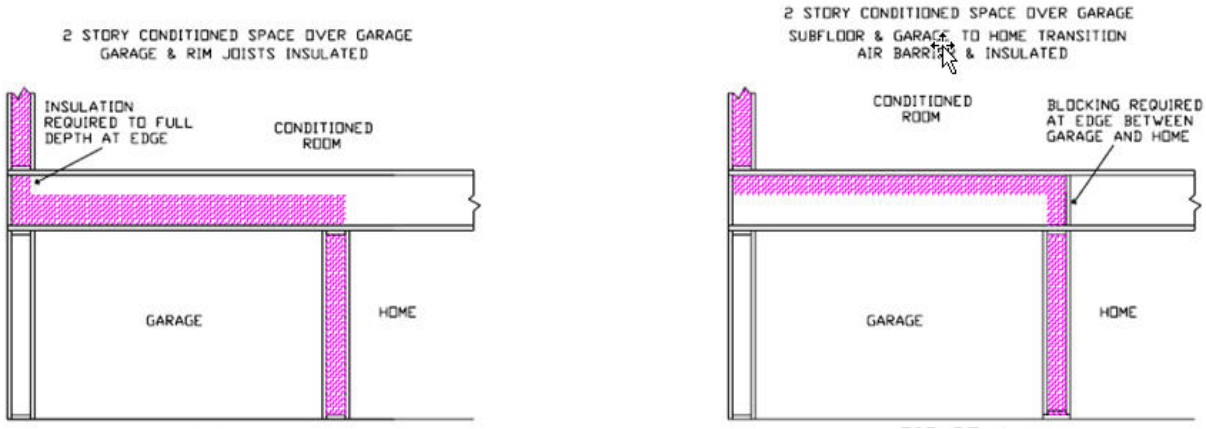

Figure RA3.5-5 Homes with Conditioned Space Over Garage – Rigid Board Insulation

RA3.5.5.4.3 **Homes with No Conditioned Space Over Garage**

The band joist where the garage transitions to an attic above conditioned space shall have an air barrier installed in contact with the edge of the attic insulation.

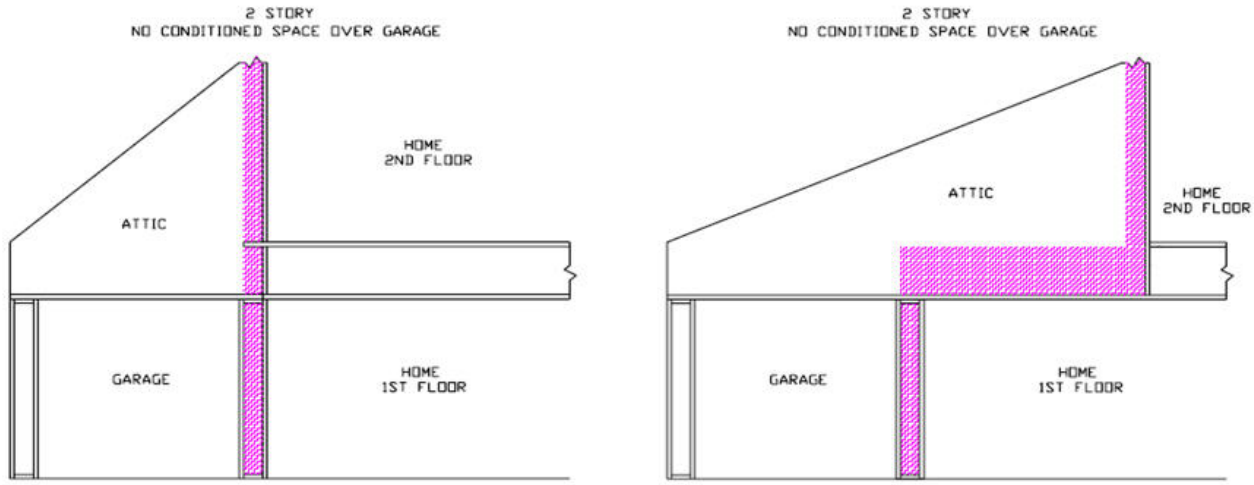

Figure RA3.5-6 Homes with No Conditioned Space Over Garage – Rigid Board Insulation

RA3.5.6 SPRAY POLYURETHANE FOAM INSULATION

These procedures detail the installation and inspection protocols necessary to qualify for Quality Insulation Installation (QII) of spray polyurethane foam (SPF) insulation. These procedures must be field verified before the building construction permit is finalized in order to claim the QII energy compliance.

These procedures are to be followed by the insulation installer and a qualified Home Energy Rating System (HERS) rater must verify its conformance for meeting the requirements of Sections 150.1(c) and 110.7(a) and (b) of the Standards.

These procedures apply to two types of SPF used as building insulation: medium-density closed cell SPF (ccSPF) and low-density open cell SPF (ocSPF). Most often, the same procedures will apply to both ccSPF and ocSPF. However, in some construction situations the procedures will be different.

NOTE:

SPF insulation shall be field verified using these procedures whenever R-values other than the default R-value per inch are used for compliance (see *"R-value"* in sections RA3.5.6.1.1 and RA3.5.6.1.2 below).

RA3.5.6.1 ***Thermal Specification***

RA3.5.6.1.1 **ccSPF**

A spray applied polyurethane foam insulation having a closed cellular structure resulting in an installed nominal density of 1.5 to less than 2.5 pounds per cubic foot (pcf).

R-value: The total R-value shall be calculated based on the nominal required thickness of the insulation multiplied by a thermal resistivity of 5.8 per inch. The R-value of ccSPF insulation shall meet or exceed the installed thickness specified in Table 3.5-1 below.

Alternatively, the total R-value may be calculated based on the thickness of insulation multiplied by the "tested R-value per inch" as listed in the Table of R-values or R-value Chart from the manufacturer's current ICC Evaluation Service Report (ESR) that shows compliance with *Acceptance Criteria for Spray-Applied Foam Plastic Insulation--AC377*. Based on this calculation, the overall assembly U-factor shall be determined by

selecting the assembly type, framing configuration, and cavity insulation from the appropriate Reference Joint Appendix JA4 table or other approved method specified in Section JA4 of the Reference Appendices.

The R-value of the installed insulation shall be based on the verified thickness at an R-value of 5.8 per inch unless an ESR is provided with compliance documentation that verifies use of other values. Approved compliance software shall make appropriate adjustments to account for the R-value and U-factor effects of the ccSPF assembly.

Nominal Thickness: ccSPF sprayed into framed cavities or on flat surfaces will expand with variable thicknesses, visibly appearing as undulations on the surface of the insulation. The average thickness of the foam insulation must meet or exceed the required R-value. Depressions in the foam insulation's surface shall not be greater than 1/2-inch of the required thickness at any given point of the surface area being insulated.

Filling of Framed Assemblies: ccSPF insulation is not required to fill the cavities of framed assemblies provided the installed thickness of insulation conforms to compliance documentation and that the bottom and top plates of vertical framing and both ends of horizontal framing, including band and rim joists, are sprayed to completely fill the cavity adjacent to and in contact with the framing to a distance of 2.0 inches away from the framing for ccSPF insulation, or filled to the thickness meeting ASTM testing as an air barrier.

Air Barrier: ccSPF installed as an air barrier shall be a minimum of 2.0 inches in thickness; alternatively, ccSPF insulation shall be installed at a thickness that meets an air permeance no greater than 0.02 L/s-m^2 at 75 Pa pressure differential when tested in accordance to ASTM E2178 or ASTM E283.

RA3.5.6.1.2 **Open Cell Spray Foam (ocSPF)**

A spray applied polyurethane foam insulation having an open cellular structure resulting in an installed nominal density of 0.4 to less than 1.5 pounds per cubic foot (pcf).

R-value: The total R-value shall be calculated based on the nominal required thickness of the insulation multiplied by a thermal resistivity of 3.6 per inch. The R-value of ocSPF insulation shall meet or exceed the installed thickness specified in Table 3.5-1 below.

Alternatively, the total R-value may be calculated based on the thickness of insulation multiplied by the "tested R-value per inch" as listed in the Table of R-values or R-value Chart from the manufacturer's current International Code Council (ICC) Evaluation Service Report (ESR) that shows compliance with *Acceptance Criteria for Spray-Applied Foam Plastic Insulation--AC377*. Based on this calculation, the overall assembly U-factor shall be determined by selecting the assembly that matches the assembly type, framing configuration, and cavity insulation from the appropriate Reference Joint Appendix JA4 table or other approved method specified in Section JA4 of the Reference Appendices.

The R-value of the installed insulation shall be based on the verified thickness at an R-value of 3.6 per inch unless an ESR is provided with compliance documentation that verifies use of other values. Approved compliance software shall make appropriate adjustments to account for the R-value and U-factor effects of the ocSPF assembly.

Nominal Thickness: ocSPF sprayed into framed cavities or on flat surfaces will expand with variable thicknesses, visibly appearing as undulations on the surface of the insulation. The average thickness of the foam insulation must meet or exceed the required R-value. Depressions in the foam insulation surface shall not be greater than 1-inch of the required thickness provided these depressions do not exceed 10% of the surface area being insulated.

Filling of Framed Assemblies: ocSPF insulation shall completely fill cavities of 2x4 inch framing or less. Cavities greater than 2x4 inch framing dimensions may be filled to the thickness that meets the required R-value used for compliance provided that the bottom and top plates of vertical framing and both ends of horizontal framing, including band and rim joists, are sprayed to completely fill the cavity adjacent to and in contact with the framing to a distance of 5.5 inches away from the framing for ocSPF insulation, or filled to the thickness meeting ASTM testing as an air barrier.

Air Barrier: ocSPF installed as an air barrier shall be a minimum of 5.5 inches in thickness; alternatively, ocSPF insulation shall be installed at a thickness that meets an air permeance no greater than 0.02 L/s-m^2 at 75 Pa pressure differential when tested in accordance to ASTM E2178 or ASTM E283.

Table RA3.5-1: Required Thickness (inches) of SPF Insulation to Achieve Specified R-values

Equivalent R-Values for SPF insulation	**11**	**13**	**15**	**19**	**21**	**22**	**25**	**30**	**38**
Required thickness of ccSPF insulation @ R5.8/inch	2.00	2.25	2.75	3.50	3.75	4.00	4.50	5.25	6.75
Required thickness of ocSPF insulation @ R3.6/inch	3.0	3.5	4.2	5.3	5.8	6.1	6.9	8.3	10.6

RA3.5.6.1.3 **Requirements for Walls, Ceilings and Floors**

(a) Materials shall comply with, and be installed in conformance with, all applicable building codes for building. California Building Code (including, but not limited to, California Electric Code Section 719) and installed to meet all applicable fire codes.

(b) Materials shall meet California Quality Standards for Insulating Material, Title 24, Part 12, Chapter 4, Article 3, listed in the California Department of Consumer Affairs Consumer Guide and Directory of Certified Insulating Materials.

(c) Materials shall comply with flame spread index and smoke developed index requirements of the CBC, Title 24, Part 2, Section 2603.5.4.

(d) The installer shall determine and the HERS rater shall verify that the manufacturer's nominal insulation thickness has been installed and certified and that all requirements of the Certificate of Verification have been met.

(e) The installer shall determine and the HERS rater shall verify that insulation is in substantial contact with the assembly air barrier. When SPF insulation is being used to provide air barrier control, the SPF insulation must cover and be in contact with the entire surface of the framing, filling the cavity to a distance away from the framing specified in "Filling of Framed Assemblies" above.

(f) SPF insulation shall be applied by SPF applicators trained and experienced in the use and maintenance of high-pressure, plural-component equipment. SPF applicators shall be certified by the SPF insulation manufacturer for the application of SPF insulation systems.

(g) SPF insulation shall be spray-applied to fully adhere to assembly framing, floor and ceiling the joists, and other framing surfaces within the construction cavity. When multiple layers of SPF material are applied, each foam lift (i.e. spray application) shall have adhesion at substrate and foam interfaces. SPF insulation shall not exhibit areas that:

1. Have voids or gaps in the uniformity of the insulation
2. Are extremely soft or spongy
3. Show the presence of liquid
4. Have blistering between lifts
5. Show differences in coloration of adjacent foam layers
6. Indicate the presence of other materials between lifts

(h) SPF insulation shall be installed in conformance with the manufacturer's specifications, recommendations and temperature/humidity limitations.

(i) Substrates to which SPF insulation is applied shall be secure and free of surface moisture, frost, grease, oils, dirt, dust or other contaminants that would adversely affect SPF adhesion.

(j) SPF insulation shall meet all provisions of the CBC Title 24, Parts 2 and 2.5. SPF shall be separated from occupied spaces by an approved thermal barrier, such as 0.5 inch gypsum wallboard or other approved material, or show equivalence through testing in accordance with CBC, Title 24, Part 2, Section 2603, and Part 2.5, Section R316.

(k) All recessed light fixtures that penetrate the ceiling shall be listed for zero clearance insulation contact (IC), have a label that certifies it as airtight with leakage less than 2.0 cfm @ 75 Pa when tested to ASTM E283, and shall be sealed with a gasket or caulk between the light's housing and the ceiling.

(l) SPF insulation may be used as the air barrier provided it has been tested to conform to the air barrier performance conditions of the Standards.

(m) Hard covers or draft stops shall be placed over all drop ceiling areas and interior wall cavities to keep insulation in place and stop air movement. If hard covers or draft stops are missing or incomplete, they shall be completed before insulation is installed.

(n) Required eave ventilation shall not be obstructed - the net free-ventilation area of the eave vent shall be maintained.

(o) Eave vent baffles shall be installed to prevent air movement under or into the ceiling insulation.

(p) SPF shall not be applied directly to recessed lighting fixtures and left exposed. Recessed light fixtures insulated with SPF insulation shall be protected from ignition by a combination of one or more of the following methods: (1) be covered with a minimum of 1.5 inches of mineral fiber insulation, or (2) be enclosed in a box fabricated from 1/4 inch plywood, 18 gauge metal, 3/8inch hard board or gypboard. The exterior of the box may then be insulated with SPF provided: (1) the SPF insulation is covered with an approved ignition barrier coating tested and supported by an ICC Evaluation Services Report (ESR) or code compliance research report approved by the local agency; or (2) the exposed condition of the SPF insulation is supported by testing with an ICC ESR or research report approved by the local building department.

RA3.5.6.1.4 **R-value Measurement Equipment**

(a) The HERS rater shall measure the installed thickness of insulation in at least 6 random locations on walls, roof/ceilings and floors (i.e., 6 measurements per opaque surface type: wall, roof/ceiling or floor) to ensure minimum thickness levels necessary to meet the R-value specified on the Certificate of Compliance, and all other required compliance documentation. Measurement areas shall include low and high areas of the SPF insulated surface.

(b) Probes for inspection of installed thickness of SPF insulation. The insulation thickness shall be verified by using a probe, gauge or device capable of measuring the installed thickness of insulation. A pointed measurement probe or other gauge or device, capable of penetrating the full thickness of the insulation, shall be used having measurements marked by at least one-eighth inch increments. Insulation thickness measurement probes and gauges or devices shall be accurate to within ±1/8 inch and shall be designed and used in a manner to cause minimal damage to the insulation.

RA3.5.6.1.5 **Certificates**

All provisions of Residential Appendix RA2 shall be met. The Insulation Certificate of Installation shall be signed by the SPF applicator stating that the installation is consistent with the plans and specifications for which the building permit was issued shall be provided. The certificate shall also state the installing company name, insulation manufacturer's name and material identification, and that the labeled installed nominal thickness, and installed R-value for SPF insulation meets those specified in Section 3, Thermal Specification. The SPF applicator shall also attach a R-value chart or an ICC ESR showing compliance with AC377 for each SPF insulation material used.

RA3.5.6.1.6 **Certificates and Availability**

All provisions of Residential Appendix RA2 shall be met. All compliance documentation shall be completed, signed by the SPF applicator, and a measuring probe or similar device shall be available at the building site for the HERS rater's verification inspection. Note: The HERS rater shall not verify compliance credit without these completed forms.

RA3.5.6.2 *Wall Insulation*

(a) SPF insulation shall be applied to provide an air-tight envelope to the outdoors and between adjoining cavity surfaces of conditioned and unconditioned space, such as the: attic, garage, and crawl space. Special attention shall be paid to plumbing and wiring penetrations through the top plates and bottom plate framing, and electrical boxes that penetrate the sheathing and the sheathing seal to the top and bottom plate framing.

(b) Bottom plates of framed and non-framed assemblies shall be sealed to the ground subfloor or slab, and above ground subfloor.

(c) SPF insulation installation shall uniformly cover the cavity side-to-side and end-to-end and shall be installed to cover and form an air barrier on the framing at the top, bottom and sides of each cavity.

NOTE:

Filling of Framed Assemblies: ccSPF insulation is not required to fill the cavities of framed assemblies provided the installed thickness of insulation conforms to compliance documentation and that the bottom and top plates of vertical framing and both ends of horizontal framing, including band and rim joists, are sprayed to completely fill the cavity adjacent to and in contact with the framing to a distance of 2.0 inches away from the framing for ocSPF insulation, or filled to the thickness meeting ASTM testing as an air barrier.

Filling of Framed Assemblies: ocSPF insulation shall completely fill cavities of 2x4 inch framing or less. Cavities greater than 2x4 inch framing dimensions may be filled to the thickness that meets the required R-value used for compliance provided that the bottom and top plates of vertical framing and both ends of horizontal framing, including band and rim joists, are sprayed to completely fill the cavity adjacent to and in contact with the framing to a distance of 5.5 inches away from the framing for ocSPF insulation, or filled to the thickness meeting ASTM testing as an air barrier.

Air Barrier: ccSPF installed as an air barrier shall be 2.0 inches in thickness. ocSPF installed as an air barrier shall be a minimum of 5.5 inches in thickness. Alternatively, ccSPF and ocSPF insulation shall be installed at a thickness that meets an air permeance no greater than 0.02 L/s-m^2 at 75 Pa pressure differential when tested in accordance to ASTM E2178 or ASTM E283.

RA3.5.6.2.1 **Narrow-Framed Cavities**

(a) Non-standard width cavities shall be filled with SPF insulation at a depth consistent with the SPF thickness required to achieve the specified R-value.

(b) Narrow spaces less than 1 inch in width at windows and door jambs, shall be filled with minimally expansive foam sealing material or SPF insulation.

(c) Narrow spaces less than 2 inches in width, such as between studs at building corners and at the intersection of interior partition walls, shall be filled with insulation snuggly fitted into the space, with minimally expansive foam, or SPF insulation.

RA3.5.6.2.2 **Special Situations--Installation Prior to Exterior Sheathing or Lath**

(a) Hard to access wall stud cavities, such as corner channels, wall intersections, and behind tub/shower enclosures shall be insulated to the proper R-value. In most cases, this can only be completed prior to the installation of the tub/shower enclosure, the exterior sheathing, or the exterior stucco lath.

(b) An air barrier shall be installed on the inside of the exterior wall(s) directly adjacent to the tub/shower enclosure.

RA3.5.6.2.3 **Special Situations--Obstructions**

(a) SPF insulation shall be applied to fully seal around wiring and plumbing.

(b) SPF insulation shall be applied to fully seal between the sheathing and the rear of electrical boxes and telephone boxes.

(c) In cold climates, where water pipes may freeze (Climate Zones 14 and 16), pipes shall have at least 2/3 of the insulation between the water pipe and the outside surface of the exterior wall. If the pipe is near the exterior finish assembly layers, as much insulation as possible shall be placed between the pipe and the exterior assembly material.

RA3.5.6.2.4 **Special Situations--Rim Joists**

(a) All rim-joists shall be insulated to the same R-Value as the adjacent walls.

(b) The insulation shall be installed without gaps.

RA3.5.6.2.5 **Special Situations--Kneewalls, Skylight Shafts and Gable Ends**

(a) Framing for kneewalls and skylight shafts that separate conditioned from unconditioned space shall be insulated to meet or exceed the wall R-value specified on the Certificate of Compliance, and all other required compliance documentation.

(b) Kneewalls within conditioned space do not need to be insulated.

(c) For steel-framed kneewalls, skylight shafts, and gable ends, external surfaces of steel studs shall be covered with insulation unless otherwise specified on the Certificate of Compliance using correct U-factors from Joint Appendix JA4, Table 4.3.4 (or U-factors approved by the Commission Executive Director).

(d) The backside of air permeable insulation exposed to the unconditioned attic space shall be completely covered with rigid board insulation or an air barrier.

(e) The house side of the insulation shall be in contact with the drywall or other wall finish.

(f) Insulation for all kneewall and skylight shafts shall be completely enclosed by vertical and horizontal framing, including horizontal plates at top and bottom of the insulation.

(g) In unvented attics, where SPF is applied directly to the underside of the roof deck, all kneewalls, skylight shafts, and gable ends shall be insulated to the same R-value as the exterior walls and as specified in the compliance documentation.

(h) SPF insulation shall be installed without gaps.

(i) SPF insulation shall be fully adhered and self-supporting so that it will remain in place.

NOTE:

Filling of Framed Assemblies: ccSPF insulation is not required to fill the cavities of framed assemblies provided the installed thickness of insulation conforms to compliance documentation and that the bottom and top plates of vertical framing and both ends of horizontal framing, including band and rim joists, are sprayed to completely fill the cavity adjacent to and in contact with the framing to a distance of 2.0 inches away from the framing for ocSPF insulation, or filled to the thickness meeting ASTM testing as an air barrier.

Filling of Framed Assemblies: ocSPF insulation shall completely fill cavities of 2x4 inch framing or less. Cavities greater than 2x4 inch framing dimensions may be filled to the thickness that meets the required R-value used for compliance provided that the bottom and top plates of vertical framing and both ends of horizontal framing, including band and rim joists, are sprayed to completely fill the cavity adjacent to and in contact with the framing to a distance of 5.5 inches away from the framing for ocSPF insulation, or filled to the thickness meeting ASTM testing as an air barrier.

Air Barrier: ccSPF installed as an air barrier shall be 2.0 inches in thickness. ocSPF installed as an air barrier shall be a minimum of 5.5 inches in thickness. Alternatively, ccSPF and ocSPF insulation shall be installed at a thickness that meets an air permeance no greater than 0.02 L/s-m^2 at 75 Pa pressure differential when tested in accordance to ASTM E2178 or ASTM E283.

RA3.5.6.2.6 **Special Situations--HVAC/Plumbing Closet**

Walls of interior closets for HVAC and/or water heating equipment that require combustion air venting, shall be insulated to the same R-value as the exterior walls as specified in the compliance documentation.

RA3.5.6.2.7 **Special Situations--Double Walls and Framed Bump-Outs**

(a) Insulation shall fill the entire cavity; or, an additional air barrier shall be installed inside the double wall or bump-out and in contact with the insulation so that the insulation fills the cavity formed with the additional air barrier.

(b) Entire double walls and framed bump-outs shall be air tight.

RA3.5.6.2.8 **Special Situations--Structural Bracing, Tie-downs, Steel Structural Framing**

(a) Framing and bracing used for structural purposes shall be identified on plan documents with diagrams and/or design drawings.

(b) Insulation shall be installed in a manner that restricts thermal bridging through the structural framing assembly.

(c) Insulation shall be applied to fully enclose and/or adhere to all sides and ends of structural assembly framing that separate conditioned from unconditioned space.

(d) The structural portions of assemblies shall be air-tight.

RA3.5.6.2.9 **Special Situations--Window and Door Headers**

All window and door headers shall be insulated to a minimum of R-2 between the exterior face of the header and inside surface of the finish wall material.

RA3.5.6.3 ***Roof/Ceilings***

(a) SPF insulation shall be applied to fully adhere to the substrate of the ceiling or roof deck.

(b) SPF insulation shall be applied to fully adhere to the joist and other framing faces to form a complete air seal within the construction cavity.

(c) SPF insulation shall be spray-applied to fully adhere to and seal around wiring and plumbing.

(d) Hard covers shall be placed over all drop ceiling areas and interior wall cavities to keep insulation in place and stop air movement. If hard covers, they shall be in place before insulation is installed.

(e) In vented attics, required eave ventilation shall not be obstructed; the net free-ventilation area of the eave vent shall be maintained.

(f) In unvented attics where SPF is applied directly to the underside of the roof deck, all gable end areas shall be insulated to the same R-value as the walls and as specified on compliance documentation. It is not necessary to place hard covers over drop ceilings and interior wall cavities in this situation.

(g) All recessed light fixtures that penetrate the ceiling shall be listed for zero clearance insulation contact (IC), have a label that certifies it as airtight with leakage less than 2.0 cfm @ 75 Pa when tested to ASTM E283, and shall be sealed with a gasket or caulk between the light's housing and the ceiling.

(h) SPF insulation shall not be applied directly to recessed lighting fixtures. Recessed light fixtures must be either insulated with CBC approved materials (i.e., mineral fiber) or enclosed in a box fabricated from ½-inch plywood, 18 gauge sheet metal, 1/4-inch hard board, drywall or other approved materials. The exterior of the box may then be insulated with SPF. Fixtures that are not air tight and rated for insulation contact (IC) shall be removed and/or replaced.

(i) SPF insulation shall be kept away from combustion appliance flues in accordance with flue manufacturers' installation instructions or labels on the flue for clearance.

RA3.5.6.3.1 **Special Situations--Enclosed Rafter Ceilings**

SPF insulation installed in unvented rafter ceilings or to the underside of unvented roofs with an attic below shall have an R-value conforming to compliance documentation and the air barrier shall be uniform across the transition of roof to wall. The insulation shall be in contact with the air barrier.

RA3.5.6.3.2 **Special Situations--Attics and Cathedral Ceilings**

(a) In attics where entry is made for the service of utilities, SPF shall be protected from ignition in accordance with CBC, Part 2, Section 2603, and Part 2.5, Section R316 or the SPF assembly must have been tested in accordance with ICC Evaluation Service Acceptance Criteria AC377.

(b) In unvented attics, where SPF is applied directly to the underside of the roof deck, all gable ends shall be insulated to the same R-value as the exterior walls and as specified in the compliance documentation.

RA3.5.6.3.3 **Special Situations--HVAC Platform**

A minimum of 3 inches of ccSPF insulation or 5.3 inches of ocSPF shall be placed below any platform or cat-walk access ways installed in vented attics for HVAC equipment or other needs. The overall assembly R-value shall meet the required R-values specified in the compliance documentation.

RA3.5.6.3.4 **Special Situations--Attic Access**

A minimum of 3 inches of ccSPF or 5.3 inches of ocSPF insulation shall be applied to the access door assuring good adhesion to the door surface. Alternatively, permanently attach rigid foam or batt insulation with adhesive or mechanical fastener. The overall assembly R-value shall meet the required values specified in the compliance documentation.

RA3.5.6.4 ***Raised Floors***

(a) SPF insulation shall be spray-applied to fully adhere to the bottom side of the floor sheathing.

(b) SPF insulation shall uniformly cover the cavity side-to-side and end-to-end.

RA3.5.6.4.1 **Homes with Floors Over Garage**

(a) SPF insulation shall be spray-applied to fully adhere to the bottom side of the floor sheathing.

(b) SPF insulation installation shall uniformly cover the cavity side-to-side and end-to-end.

RA3.5.6.4.2 **Homes with Conditioned Space Over Garage**

The floor over the garage shall be insulated by spraying SPF insulation to fully adhere to the subfloor of the conditioned space. The garage and the adjacent conditioned space (house) shall be insulated up to the subfloor. SPF insulation shall cover any gaps between the header and the floor joist.

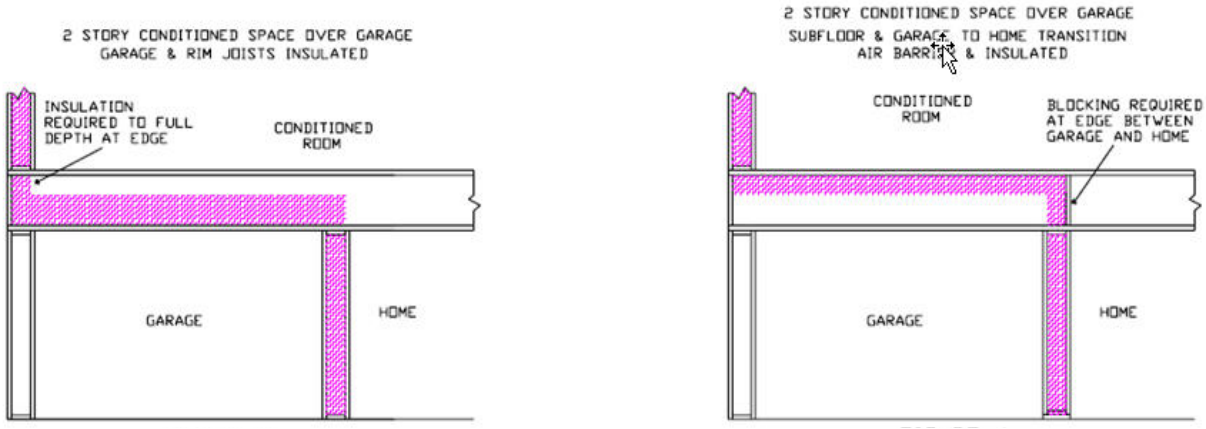

Figure RA3.5-7 Homes with Conditioned Space Over Garage – Spray Polyurethane Foam Insulation

RA3.5.6.4.3 **Homes with No Conditioned Space Over Garage**

The band joist where the garage transitions to an attic above conditioned space shall have an air barrier installed in contact with the edge of the attic insulation.

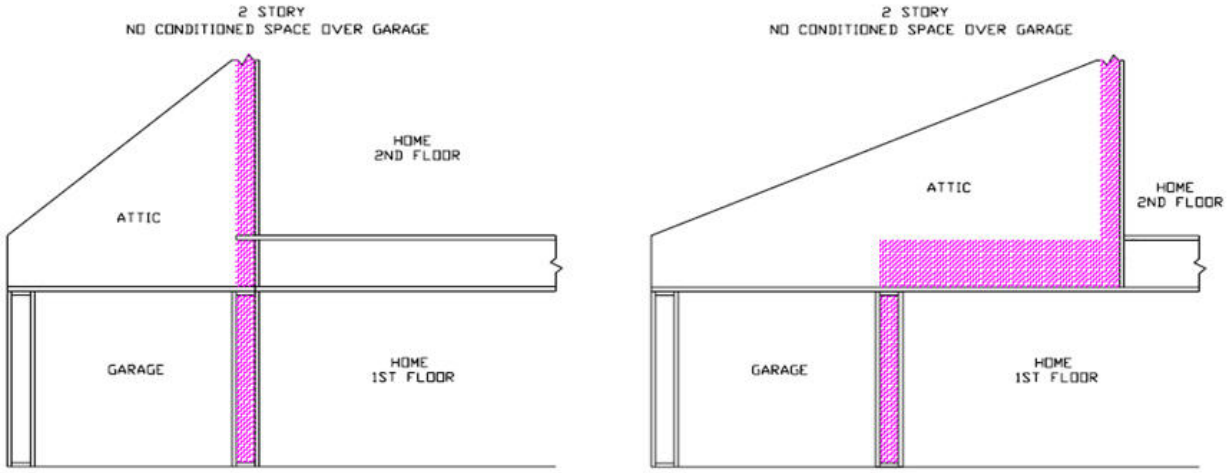

Figure RA3.5-8 Homes with No Conditioned Space Over Garage – Spray Polyurethane Foam Insulation

RA3.5.7 STRUCTURAL INSULATED PANEL (SIP)

These procedures detail the installation and inspection protocols necessary to qualify for Quality Insulation Installation (QII) of Structural Insulated Panel (SIP) systems. These procedures must be field verified before the building construction permit is finalized in order to claim QII energy compliance.

These procedures are to be followed by the SIP installer and a qualified Home Energy Rating System (HERS) rater must verify its conformance for meeting the requirements of Sections 150.1(c) and 110.7(a) and (b) of the Standards.

RA3.5.7.1 ***Thermal Specification***

This insulation type is a composite building material manufactured with an internal insulating layer of rigid insulation of sheet or board material, or from cured spray polyurethane foam insulation material. The internal insulation is sandwiched between two layers of structural board, usually referred to as a "panel." The result is "panelized" construction versus traditional framed construction. SIPs combine several components of conventional building, such as studs and joists, insulation, vapor retarder and air barrier. They can be used for different applications, such as exterior walls, roofs, and floors. Examples of common SIP sizes are panels ranging in length from 4x8 feet to 4x24 feet and having core thickness of 3 1/2 inches to 11 1/2 inches, depending on the manufacturer. Panels are typically cut at the manufacturing facility to precisely fit the building's design characteristics. Openings for windows and doors are cut into one or more panels, and often small chases are provided within the internal insulation for electrical wiring and plumbing.

SIPs can be used for the entire building envelope or for individual assemblies, such as for just walls or just floors. In these situations, the SIP system will used in conjunction with other traditional insulation materials installed within cavities of framed assemblies. The R-value of a SIP is dependent on the type of material used internally for insulation and the overall thickness of the panel. Specific product R-values are readily available from the manufacturer and for the specific materials being installed. The R-value of the product is typically marked on the product. The installed insulation must meet the R-value stated on the compliance documentation.

RA3.5.7.1.1 **Requirements for Walls, Ceilings and Floors**

(a) Materials shall comply with, and be installed in conformance with, all applicable building codes for building. California Building Code (including, but not limited to, California Electric Code Section 719) and installed to meet all applicable fire codes.

(b) Materials shall meet California Quality Standards for Insulating Material, Title 24, Part 12, Chapter 4, Article 3, listed in the California Department of Consumer Affairs Consumer Guide and Directory of Certified Insulating Materials.

(c) Materials shall comply with flame spread rating and smoke density requirements of Chapter 26 and Section 706 of the Title 24, Part 2: all installations with exposed facings must use fire retardant facings which have been tested and certified not to exceed a flame spread of 25 and a smoke development rating of 450. Insulation facings that do not touch a ceiling, wall, or floor surface, and faced batts on the undersides of roofs with an air space between the ceiling and facing are considered exposed applications.

(d) Materials shall be installed according to manufacturer specifications and instructions.

(e) SIP systems are considered an air barrier; however extension of the air barrier shall be made across all interconnections of panels, at window and door openings, and at all adjoining surfaces of different panel areas (i.e., where SIP walls adjoin the floor and roof/ceiling).

(f) Hard covers or draft stops shall be placed over all drop ceiling areas and interior wall cavities to keep insulation in place and stop air movement if present (i.e., traditional framed attics). If hard covers or draft stops are missing or incomplete, they shall be completed before insulation is installed.

(g) In traditional framed attics, required eave ventilation shall not be obstructed for conventional attics - the net free-ventilation area of the eave vent shall be maintained. Eave vent baffles shall be installed to prevent air movement under or into the ceiling insulation of conventional attics.

(h) Insulation shall cover all recessed lighting fixtures. If the fixtures are not rated for insulation cover (IC) and air tight, the fixtures shall be replaced.

(i) All recessed light fixtures that penetrate the ceiling shall be listed for zero clearance insulation contact (IC), have a label that certifies it as airtight with leakage less than 2.0 cfm @ 75 Pa when tested to ASTM E283, and shall be sealed with a gasket or caulk between the light's housing and the ceiling.

RA3.5.7.1.2 **R-value Measurement Equipment**

The HERS raters shall verify the installed thickness of insulation in all SIP panels and locations on walls, roof/ceilings, and floors, and to ensure that insulation levels and installation integrity meet the R-value specified on the Certificate of Compliance, and all other required compliance documentation.

RA3.5.7.1.3 **Certificates**

All provisions of Residential Appendix RA2 shall be met. An Insulation Certificate of Installation signed by the installer shall be provided that states the installation is consistent with the plans and specifications for which the building permit was issued. The certificate shall also state the installing company name, SIP manufacturer's name and material identification, and the installed R-value. The SIP installer shall also complete the applicable sections of the Certificate of Installation form and attach a product specification or data sheet for every insulation material used.

RA3.5.7.1.4 **Certificates and Availability**

All provisions of Residential Appendix RA2 shall be met. The Insulation Certificate of Installation, with insulation material labels or specification/data sheets attached, signed by the SIP installer, shall be available on the building site for each of the HERS rater's verification inspections. Note: The HERS rater cannot verify compliance credit without these completed forms.

RA3.5.7.2 ***Wall Insulation***

(a) Connections of wall panels shall be sealed, caulked, foamed, or taped (i.e., SIP tape) to provide a substantially air-tight envelope to the outdoors, attic, garage and crawl space. All plumbing and wiring penetrations through the top and bottom of panels, and electrical boxes that penetrate the SIP sheathing shall be sealed. All gaps in the air barrier shall be caulked, or sealed with minimally expansive foam or taped (i.e., SIP tape).

(b) Bottom connections of wall panels shall be sealed to the ground subfloor or slab, and above ground subfloor.

(c) Insulation shall uniformly fit across the plane of the wall and taping (i.e., SIPs tape), caulking or sealing of all joints and seams of panel joints (i.e., spline connections) shall be maintained to be considered as the air barrier.

RA3.5.7.2.1 **Special Situations--Obstructions**

(a) Penetrations and obstructions to the SIP shall be completely caulked and sealed.

(b) Insulation shall fill between the sheathing and the rear of electrical boxes and phone boxes.

RA3.5.7.2.2 **Special Situations--Rim Joists**

(a) All rim-joists shall be insulated to the same R-value as the adjacent walls.

(b) The insulation shall be installed without gaps and voids.

RA3.5.7.2.3 **Special Situations--Kneewalls, Skylight Shafts and Gable Ends**

(a) Framing for kneewalls, skylight shafts and gable ends that separate conditioned from unconditioned space shall be insulated to meet or exceed the wall R-value specified on the Certificate of Compliance, and all other required compliance documentation.

(b) For steel-framed kneewalls, skylight shafts, and gable ends, external surfaces of steel studs shall be covered with insulation unless otherwise specified on the Certificate of Compliance using correct U-factors from Joint Appendix JA4, Table 4.3.4 (or U-factors approved by the Commission Executive Director).

(c) The backside of air permeable insulation exposed to the unconditioned attic space shall be completely covered with rigid board insulation or an air barrier.

RA3.5.7.2.4 **Special Situations--HVAC/Plumbing Closet**

(a) Walls of interior closets for HVAC and/or water heating equipment, which require combustion air venting, shall be insulated to the same R-value as the exterior walls as specified in compliance documentation.

RA3.5.7.2.5 **Special Situations--Double Walls and Framed Bump-Outs**

(a) Insulation shall fill the entire cavity; or, an additional air barrier shall be installed inside the double wall or bump-out and in contact with the insulation so that the insulation fills the cavity formed with the additional air barrier.

(b) Entire double walls and framed bump-outs shall be air tight.

RA3.5.7.2.6 **Special Situations--Structural Bracing, Tie-downs, Steel Structural Framing**

(a) Framing and bracing used for structural purposes shall be identified on plan documents with diagrams and/or design drawings.

(b) Insulation shall be installed in a manner that restricts thermal bridging through the structural framing assembly.

(c) Insulation shall be applied to fully enclose and/or adhere to all sides and ends of structural assembly framing.

(d) The structural portions of assemblies shall be air-tight.

RA3.5.7.2.7 **Special Situations--Window and Door Headers**

All window and door headers shall be insulated to a minimum of R-2 between the exterior face of the header and inside surface of the finish wall material.

RA3.5.7.3 ***Roof/Ceilings***

(a) Baffles shall be placed at eaves or soffit vents of vented attics to keep insulation from blocking eave ventilation and prevent air movement under the insulation. The required net free-ventilation shall be maintained.

(b) Hard covers or draft stops shall be placed over all drop ceiling areas and interior wall cavities to keep insulation in place and stop air movement. If hard covers or draft stops are missing or incomplete, they shall be completed before insulation is installed.

RA3.5.7.3.1 **Special Situations--Attics and Cathedral Ceilings**

(a) Insulation installed in unvented rafter ceilings or to the underside of unvented roofs with an attic below shall have an R-value conforming to compliance documentation and the air barrier shall be uniform across the transition of roof to wall. The insulation shall be in contact with the air barrier.

(b) In unvented attics, where SIPs are the insulated roof structure, all gable ends shall be insulated to the same R-value as the exterior walls as specified in the compliance documentation.

RA3.5.7.3.2 **Special Situations--HVAC Platform**

Insulation shall be placed below any platform or cat-walk for HVAC equipment installation and access.

RA3.5.7.3.3 **Special Situations--Attic Access**

Permanently attach rigid board insulation, batt or blanket insulation, or SIP with the appropriate R-value to the access door using adhesive or mechanical fastener. The bottom of the attic access shall be gasketed to prevent air leakage of conditioned air to the unconditioned attic.

RA3.5.7.4 ***Raised Floors***

SIPs air barrier shall be maintain through use of SIP tape, or sealing and caulking between panels and at all spline joints.

RA3.5.7.4.1 **Homes with Floors Over Garage**

On floors that are over garages, the rim joist shall be insulated.

RA3.5.7.4.2 **Homes with Conditioned Space Over Garage**

The floor over the garage shall be insulated. The garage and the adjacent conditioned space (house) shall be insulated up to the subfloor. All rim and band joists adjoining conditioned space shall be air tight and insulated.

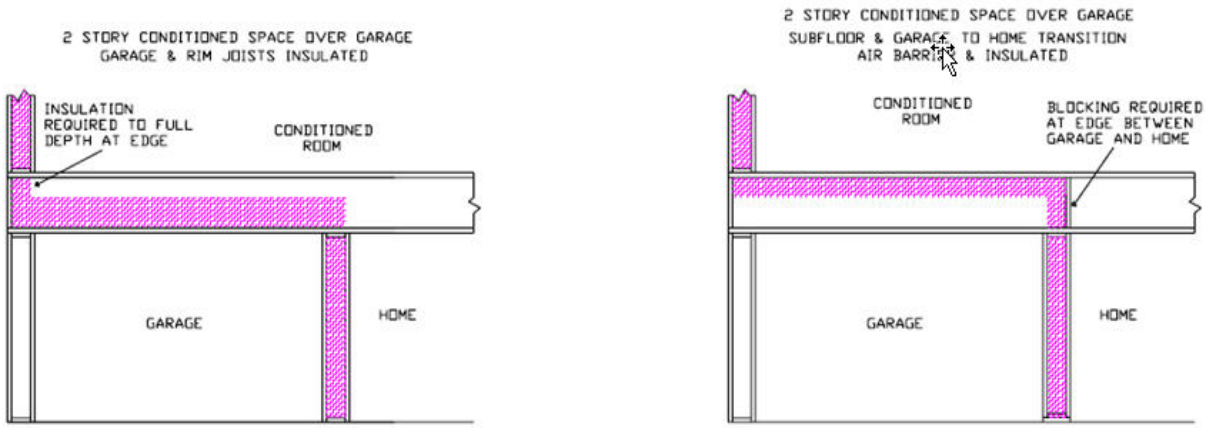

Figure RA3.5-9 Homes with Conditioned Space Over Garage – Structural Insulated Panel (SIP)

RA3.5.7.4.3 **Homes with No Conditioned Space Over Garage**

The band joist where the garage transitions to an attic above conditioned space shall have an air barrier installed in contact with the edge of the attic insulation.

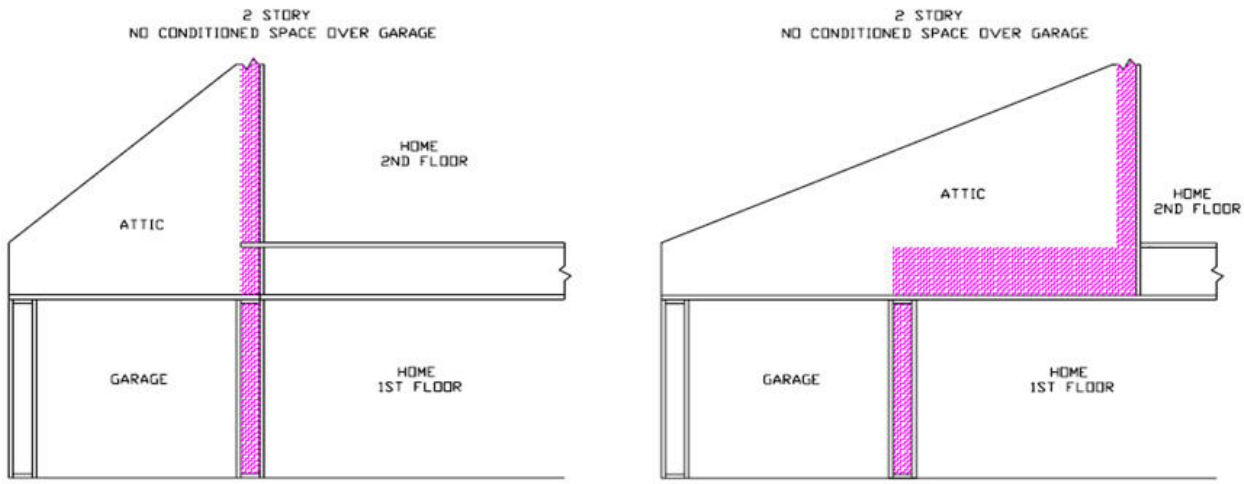

Figure RA3.5-10 Homes with No Conditioned Space Over Garage – Structural Insulated Panel (SIP)

RA3.5.8 INSULATED CONCRETE FORM (ICF)

These procedures detail the installation and inspection protocols necessary to qualify for Quality Insulation Installation (QII) of insulated concrete forms (ICFs). These procedures must be field verified before the building construction permit is finalized in order to claim QII energy compliance.

These procedures are to be followed by the insulation installer and a qualified Home Energy Rating System (HERS) rater must verify its conformance for meeting the requirements of Sections 150.1(c) and 110.7(a) and (b) of the Standards.

RA3.5.8.1 ***Thermal Specification***

Conventional concrete and concrete masonry unit (CMU) walls, floors and roofs can be insulated on the inside, on the outside, or have insulation between two layers of concrete (i.e., sandwich panel walls/block walls). ICFs are typically single forming masonry blocks with insulation to improve the thermal resistance of the material.

ICFs are manufactured in conventional CMU dimensions of 6 inch, 8 inch, 10 inch, and larger widths. Insulated concrete forms (ICFs) typically have a layer of insulation located: (1) within the inner core of the concrete masonry unit; or, (2) on one or all sides surrounding an inner core of concrete.

A similar type of insulated concrete form system is autoclaved aerated concrete (AAC) which has an air void matrix rather than sand and gravel commonly used in conventional concrete. The density range of AAC is 30 to 50 pounds per cubic foot (pcf) compared to conventional concrete used with ICFs with a density of approximately 80 to 140 pounds per cubic foot (pcf).

The R-value of ICFs is dependent on the type of insulation material used and its thickness. Insulation used within the inner core of ICFs can be: (1) poured-in-place vermiculite or perlite; (2) foamed-in-place spray polyurethane foam insulation material; or, (3) standard molded insulation inserts of rigid board insulation material. Insulation used to make up one or more of the outer layers of the ICF is a rigid board insulation material. Specific product R-values are readily available from the manufacturer for the specific materials being installed. R-value of the product is typically marked on the product. The installed insulation must meet the R-value stated on the compliance documentation.

RA3.5.8.1.1 **Requirements for Walls, Ceilings and Floors**

(a) Materials shall comply with, and be installed in conformance with, all applicable building codes for building. California Building Code (including, but not limited to, California Electric Code Section 719) and installed to meet all applicable fire codes.

(b) Materials shall meet California Quality Standards for Insulating Material, Title 24, Part 12, Chapter 4, Article 3, listed in the California Department of Consumer Affairs Consumer Guide and Directory of Certified Insulating Materials.

(c) Materials shall comply with flame spread rating and smoke density requirements of Chapter 26 and Section 706 of the Title 24, Part 2: all installations with exposed facings must use fire retardant facings which have been tested and certified not to exceed a flame spread of 25 and a smoke development rating of 450. Insulation facings that do not touch a ceiling, wall, or floor surface, and faced batts on the undersides of roofs with an air space between the ceiling and facing are considered exposed applications.

(d) Materials shall be installed according to manufacturer specifications and instructions.

(e) ICF systems are considered an air barrier; however extension of the air barrier shall be made across all interconnections of window and door openings, and at all adjoining surfaces of exterior envelope assemblies of different materials (i.e., where ICF walls adjoin framed floors and roof/ceilings).

(f) Hard covers or draft stops shall be placed over all drop ceiling areas and interior wall cavities to keep insulation in place and stop air movement if present (i.e., traditional framed attics). If hard covers or draft stops are missing or incomplete, they shall be completed before insulation is installed.

(g) In traditional framed attics, required eave ventilation shall not be obstructed for conventional attics - the net free-ventilation area of the eave vent shall be maintained. Eave vent baffles shall be installed to prevent air movement under or into the ceiling insulation of conventional attics.

(h) Insulation shall cover all recessed lighting fixtures. If the fixtures are not rated for insulation cover (IC) and air tight, the fixtures shall be replaced.

(i) All recessed light fixtures that penetrate the ceiling shall be listed for zero clearance insulation contact (IC), have a label that certifies it as airtight with leakage less than 2.0 cfm @ 75 Pa when tested to ASTM E283, and shall be sealed with a gasket or caulk between the light's housing and the ceiling.

RA3.5.8.1.2 **R-value Measurement Equipment**

The HERS raters shall verify the installed type and thickness of insulation in the ICF system being used for walls, roof/ceilings, and floors, and to ensure that insulation levels and installation integrity meet the R-value specified on the Certificate of Compliance, and all other required compliance documentation.

RA3.5.8.1.3 **Certificates**

All provisions of Residential Appendix RA2 shall be met. An Insulation Certificate of Installation signed by the installer shall be provided that states the installation is consistent with the plans and specifications for which the building permit was issued. The certificate shall also state the installing company name, ICF manufacturer's name and material identification, and the installed R-value. The ICF installer shall also complete the applicable sections of the Certificate of Installation form and attach a product specification or data sheet for every insulation material used.

RA3.5.8.1.4 **Certificates and Availability**

All provisions of Residential Appendix RA2 shall be met. The Insulation Certificate of Installation, with insulation material labels or specification/data sheets attached, signed by the SIP installer, shall be available on the building site for each of the HERS rater's verification inspections. Note: The HERS rater cannot verify compliance credit without these completed forms.

RA3.5.8.2 ***Wall Insulation***

(a) Connections of ICF walls shall be grouted and sealed meeting manufacturer's specifications. All plumbing and wiring penetrations through the top and bottom of the ICF, and electrical boxes that penetrate the plane of the ICF shall be sealed. All gaps between interconnecting envelope assemblies of different materials shall have air barrier caulked, or sealed with minimally expansive foam or taped.

(b) Bottom connections of ICFs shall be sealed to the ground subfloor or slab, and above ground subfloor.

(c) Insulation shall uniformly fit across the plane of the wall and taping, caulking or sealing of all joints and seams of the ICF shall be maintained to be considered as the air barrier.

RA3.5.8.2.1 **Special Situations--Obstructions**

(a) Penetrations and obstructions to the ICF shall be completely caulked and sealed.

(b) Insulation shall fill between the sheathing and the rear of electrical boxes and phone boxes.

RA3.5.8.2.2 **Special Situations--Rim Joists**

(a) All rim-joists shall be insulated to the same R-value as the adjacent walls.

(b) The insulation shall be installed without gaps and voids.

RA3.5.8.2.3 **Special Situations--Kneewalls, Skylight Shafts and Gable Ends**

(a) Framing for kneewalls, skylight shafts and gable ends that separate conditioned from unconditioned space shall be insulated to meet or exceed the wall R-value specified on the Certificate of Compliance, and all other required compliance documentation.

(b) For steel-framed kneewalls, skylight shafts, and gable ends, external surfaces of steel studs shall be covered with insulation unless otherwise specified on the Certificate of Compliance using correct U-factors from Joint Appendix JA4, Table 4.3.4 (or U-factors approved by the Commission Executive Director).

(c) The backside of air permeable insulation exposed to the unconditioned attic space shall be completely covered with rigid board insulation or an air barrier.

RA3.5.8.2.4 **Special Situations--HVAC/Plumbing Closet**

Walls of interior closets for HVAC and/or water heating equipment, which require combustion air venting, shall be insulated to the same R-value as the exterior walls as specified in compliance documentation.

RA3.5.8.2.5 **Special Situations--Double Walls and Framed Bump-Outs**

(a) Insulation shall fill the entire cavity; or, an additional air barrier shall be installed inside the double wall or bump-out and in contact with the insulation so that the insulation fills the cavity formed with the additional air barrier.

(b) Entire double walls and framed bump-outs shall be air tight.

RA3.5.8.2.6 **Special Situations--Structural Bracing, Tie-downs, Steel Structural Framing**

(a) Framing and bracing used for structural purposes shall be identified on plan documents with diagrams and/or design drawings.

(b) Insulation shall be installed in a manner that restricts thermal bridging through the structural framing assembly.

(c) Insulation shall be applied to fully enclose and/or adhere to all sides and ends of structural assembly framing.

(d) The structural portions of assemblies shall be air-tight.

RA3.5.8.2.7 **Special Situations--Window and Door Headers**

All window and door headers shall be insulated to a minimum of R-2 between the exterior face of the header and inside surface of the finish wall material.

RA3.5.8.3 ***Roof/Ceilings***

(a) Baffles shall be placed at eaves or soffit vents of vented attics to keep insulation from blocking eave ventilation and prevent air movement under the insulation. The required net free-ventilation shall be maintained.

(b) Hard covers or draft stops shall be placed over all drop ceiling areas and interior wall cavities to keep insulation in place and stop air movement. If hard covers or draft stops are missing or incomplete, they shall be completed before insulation is installed.

RA3.5.8.3.1 **Special Situations--Attics and Cathedral Ceilings**

(a) Insulation installed in unvented rafter ceilings or to the underside of unvented roofs with an attic below shall have an R-value conforming to compliance documentation and the air barrier shall be uniform across the transition of roof to wall. The insulation shall be in contact with the air barrier.

(b) In unvented attics, where ICFs are the insulated roof structure, all gable ends shall be insulated to the same R-value as the exterior walls as specified in the compliance documentation.

RA3.5.8.3.2 **Special Situations--HVAC Platform**

Insulation shall be placed below any platform or cat-walk for HVAC equipment installation and access.

RA3.5.8.3.3 **Special Situations--Attic Access**

Permanently attach rigid board insulation, batt or blanket insulation with the appropriate R-value to the access door using adhesive or mechanical fastener. The bottom of the attic access shall be gasketed to prevent air leakage of conditioned air to the unconditioned attic.

RA3.5.8.4 ***Raised Floors***

The outer and inner face, and all joints of the ICF air barrier, shall be maintain through use of tape, or sealing and caulking as needed.

RA3.5.8.4.1 **Homes with Floors Over Garage**

On floors that are over garages, the rim joist shall be insulated.

RA3.5.8.4.2 **Homes with Conditioned Space Over Garage**

The floor over the garage shall be insulated. The garage and the adjacent conditioned space (house) shall be insulated up to the subfloor. All rim and band joists adjoining conditioned space shall be air tight and insulated.

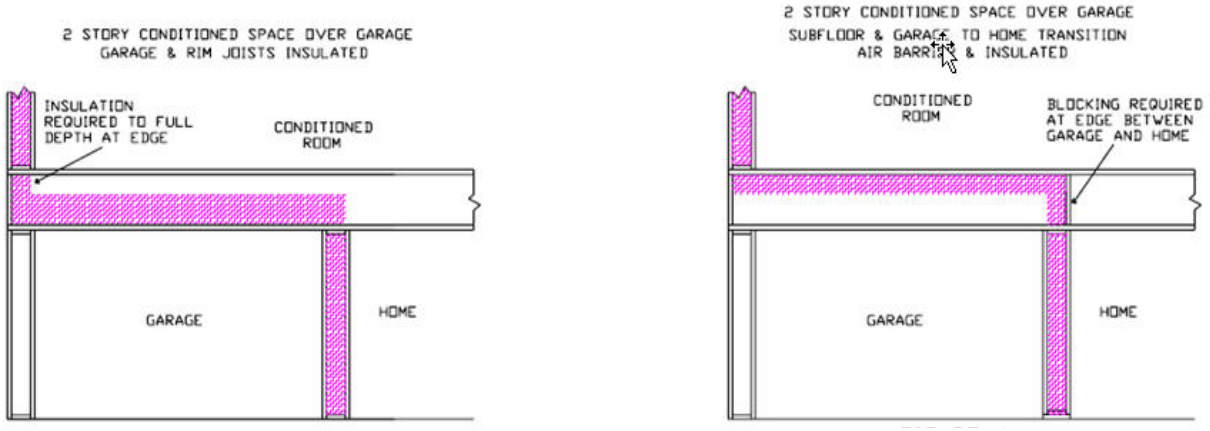

Figure RA3.5-11 Homes with Conditioned Space Over Garage – Insulated Concrete Form (ICF)

RA3.5.8.4.3 **Homes with No Conditioned Space Over Garage**

The band joist where the garage transitions to an attic above conditioned space shall have an air barrier installed in contact with the edge of the attic insulation.

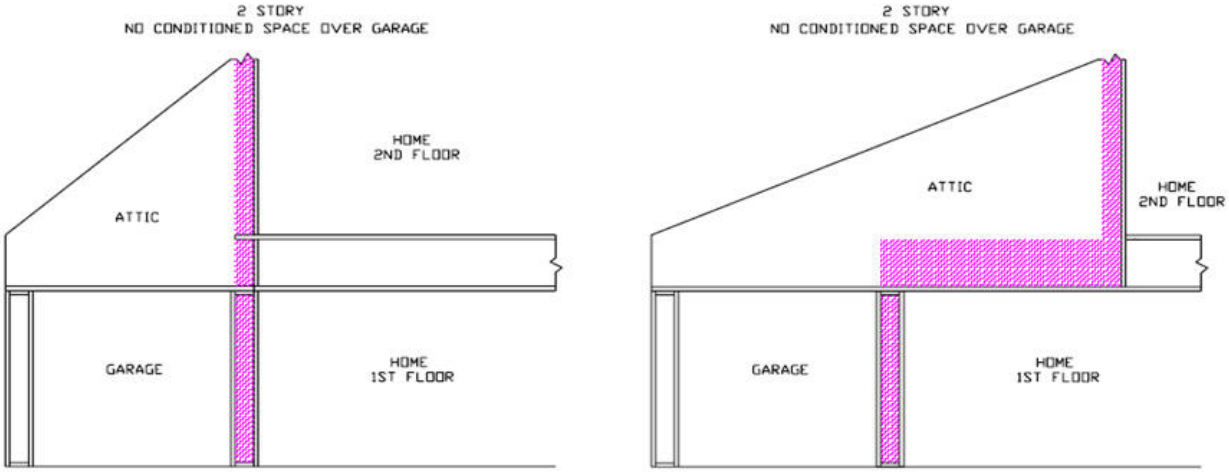

Figure RA3.5-12 Homes with No Conditioned Space Over Garage – Insulated Concrete Form (ICF)

RA3.6 *Field Verification of Water Heating Systems*

RA3.6.1 Purpose and Scope

Water Heating HERS field verification offers credits for improved performance in terms of "quality" pipe insulation installation, for the installation of field-verified hot water distribution systems that are more compact and therefore perform better than typical hot water distribution systems and for the installation of specific circulation strategies. The listed HERS measures can be completed on a sampling basis.

RA3.6.2 HERS-Verified Pipe Insulation Requirements for all Hot Water Distribution Systems

Hot water piping shall be installed in accordance with Proper Installation of Pipe Insulation and Insulated Pipes Below Grade, as applicable:

(a) Pipe insulation shall fit tightly to the pipe and all elbows and tees shall be fully insulated.

(b) No piping should be visible due to insulation voids with the exception of the last segment of piping that penetrates walls and delivers hot water to the sink, appliance, etc.

(c) Pipe insulation on the first five feet of hot and cold water piping from storage water heaters§150.0(j),

(d) Pipe insulation may be omitted where hot water distribution piping is buried within attic, crawlspace or wall insulation, as described below: In attics and crawlspaces the insulation shall completely surround the pipe with at least 1 inch of insulation and the pipe shall be completely covered with at least 4 inches of insulation further away from the conditioned space. In walls, the insulation must completely surround the pipe with at least 1 inch of insulation. If burial within the insulation does not meet these specifications, then this exception does not apply, and the section of pipe not meeting the specifications must be insulated as specified in §150.0(j).

(e) All underground hot water piping, all piping from the water heater to kitchen sinks and dishwashers and all non-recirculating hot water piping of 3/4" diameter or greater are mandatory measure as specified in §150.0(j).

1. In addition, all piping below grade must be installed in a waterproof and non-crushable casing or sleeve that allows for installation, removal and replacement of the enclosed pipe and insulation. The internal cross-section or diameter of the casing or sleeve shall be large enough to allow for insulation of the hot water piping. Piping below grade that serves any island sinks or other island fixtures or appliances may be insulated with 1/2 inch wall thickness insulation.

RA3.6.3 HERS-Verified Pipe Insulation Credit (PIC-H)

The visual inspection shall verify that all hot water piping is insulated. This credit can only be taken for trunk and branch hot water distribution systems. Specific installation requirements include:

1. Hot water piping from the water heater(s) to all fixtures and appliances shall be insulated based on the conductivity range in TABLE 120.3-A and the insulation level shall be selected from the fluid temperature range based on the thickness requirements in TABLE 120.3-A.

2. The HERS rater shall verify that all hot water piping is insulated in accordance with the provisions in RA3.6.2 HERS-Verified Pipe Insulation Requirements for all Hot Water Distribution Systems and RA4.4.3 Pipe Insulation Credit (PIC)

RA3.6.4 HERS-Verified Central Parallel Piping (PP-H)

This measure expands on the requirements for parallel piping systems that use one or more central manifolds with individual runs from the manifold to each point of use. Visual inspection shall verify that all supply lines of the parallel piping system meet the specific installation requirements listed below:

(a) The measured length of pipe from the water heater to each central manifold shall not exceed 5 feet (measured to the nearest half foot).

(b) The hot water distribution system piping from the manifold to the fixtures and appliances must take the most direct path. For example, in a house with more than 1-story and the water heater in the garage, this requirement would exclude running hot water supply piping from the manifold to the attic, and then running the line back down to a first floor point of use.

1. The hot water distribution piping must be separated by at least two inches from any other hot water supply piping, and at least six inches from any cold water supply piping or the hot water supply piping must be insulated based on the conductivity range in TABLE 120.3-A and the insulation level shall be selected from the fluid temperature range based on the thickness requirements in TABLE 120.3-A.

(c) The HERS inspector shall also verify that other hot water piping is insulated and installed to meet the requirements of RA3.6.2.

RA3.6.5 HERS-Verified Compact Hot Water Distribution System (CHWDS-H)

To meet the Compact HWDS requirement, HERS field measurements shall verify that the longest measured pipe run length between a hot water use point and the water heater serving that use be no more than the distance specified in Table 3.6.4. Table 3.6.4 specifies the maximum pipe length as a function of Floor Area Served, where Floor Area Served is defined as the conditioned floor area divided by the number of installed water heaters.

TABLE 3.6.5

Floor Area Served (ft2)	Maximum Measured Water Heater To Use Point Distance (ft)
< 1000	28’
1001 – 1600	43’
1601 – 2200	53’
2201 – 2800	62’
>2800	68’

Verification shall include:

(a) Verify that floor area (ft2) of the building matches the conditioned floor area that was used in compliance documentation. (Note: Floor Areas Served equals the conditioned floor area divided by the number of installed water heaters).

(b) Measure length from water heater to the use point furthest from the water heater and determine if that value is equal to or less than listed in Table 3.6.4. Measurements shall be made to the nearest half foot.

(c) The hot water distribution system piping from the water heater(s) to the fixtures and appliances must take the most direct path. For example, in a house with more than 1-story and the water heater in the garage, this requirement would exclude running hot water supply piping from the manifold to the attic, and then running the line back down to a first floor point of use.

(d) The HERS inspector shall also verify that hot water piping is insulated and installed to meet the requirements of RA3.6.2.

RA3.6.6 HERS-Verified Point of Use (POU-H)

This measure requires that all hot water fixtures in the dwelling unit, with the exception of a stand along tub, must use no more pipe length per run than defined in table 3.6.6. To meet this requirement most houses will require multiple water heaters.

Table 2.6.6

Size Nominal, Inch	Length of Pipe (feet)
3/8”	15
1/2”	10
3/4”	5

Verification details for this measure include:

(a) Measurements shall be made to the nearest half foot.

(b) If a combination of piping is used in a single run then one half the allowed length of each size shall be the maximum installed length.

(c) The hot water distribution system piping from the water heater(s) to the fixtures and appliances must take the most direct path. For example, in a house with more than 1-story and the water heater in the garage, this requirement would exclude running hot water supply piping from the manifold to the attic, and then running the line back down to a first floor point of use.

(d) The HERS inspector shall also verify that hot water piping is insulated and installed to meet the requirements of RA3.6.2.

RA3.6.7 HERS Verified Demand Recirculation; Manual Control (R-DRmc-H)

Demand controlled recirculation systems shall operate “on-demand”, meaning that pump operation shall be initiated shortly prior to the hot water draw. The controls shall operate on the principal of shutting off the pump with a sensed rise in pipe temperature (Delta-T). For this HERS verification process, a manual switch is required.

Verification shall include:

(a) More than one circulation loop may be installed. Each loop shall have its own pump and controls.

(b) Verify that the pump, demand controls and thermo-sensor are present. Manual switches shall be located in the kitchen, all bathrooms, and any hot water use location that is at least 20 feet (measured along the hot water piping) from the water heater.

(c) Manual controlled systems may be activated by wired or wireless button mechanisms. Verify that manual controls have standby power of 1 watt or less.

(d) Verify that pump and control placement for the demand recirculation meets one of the following criteria.

1. When a dedicated return line has been installed the pump, controls and thermo-sensor are installed at the end of the supply portion of the recirculation loop (typically under a sink); or
2. The pump and controls are installed on the return line near the water heater and the thermo-sensor is installed in an accessible location as close to the end of the supply portion of the recirculation loop as possible (typically under a sink), or
3. When the cold water line is used as the return, the pump, demand controls and thermosensor shall be installed in an accessible location at the end of supply portion of the hot water distribution line (typically under a sink).

(e) Verify that a check valve is installed in the recirculation loop to prevent unintentional circulation of the water (thermo-siphoning) and back flow when the system is not operating. This check valve may be included with the pump.

(f) The HERS inspector shall also verify that the supply portion of each circulation loop, the first five feet of branches off the loop and the dedicated return line are insulated based on the conductivity range in TABLE 120.3-A, the insulation level shall be selected from the fluid temperature range based on the thickness requirements in TABLE 120.3-A and the insulation shall be installed in accordance with RA3.6.2. Other hot water piping shall meet the requirements of §150.0(j) and be installed in accordance with RA3.6.2. Insulation is not required on the cold water line when it is used as the return.

(g) The hot water distribution system piping from the water heater(s) to the fixtures and appliances must take the most direct path. For example, in a house with more than 1-story and the water heater in the garage, this requirement would exclude running hot water supply piping from the water heater to the attic, and then running the line back down to a first floor point of use.

(h) Verify that manual controls initiate pump operation by pressing one of the manual controls and observing that the pump turns on and then shuts off in accordance with one of the two methods listed.

a. After the pump has been activated, the controls shall allow the pump to operate until the water temperature at the thermo-sensor rises not more than 10ºF (5.6 ºC) above the initial temperature of the water in the pipe, or

b. The controls shall not allow the pump to operate when the temperature in the pipe exceeds 102ºF (38.9 ºC).

(i) Verify that the controls have a feature that limits pump operation to a maximum of 5 minutes following any activation. This is provided in the event that the normal means of shutting off the pump have failed.

(j) The manufacturer(s) of the recirculation pump and the controls shall provide installation and operation instructions that provide details of the operation of the pump and controls and such instructions shall be available at the jobsite for inspection.

RA3.6.8 HERS-Verified Demand Recirculation: Sensor Control (RDRsc-H)

Demand controlled recirculation systems shall operate “on-demand”, meaning that pump operation shall be initiated shortly prior to the hot water draw. The controls shall operate on the principal of shutting off the pump with a sensed rise in pipe temperature (Delta-T). For this HERS verification process a sensor control is used to activate the pump rather than a manual control.

Verification shall include:

(a) More than one circulation loop may be installed. Each loop shall have its own pump and controls.

(b) Verify that the pump, demand controls and thermo-sensor are present. Sensor controls shall be located in the kitchen, bathrooms, and any hot water use location that is at least 20 feet (measured along the hot water piping) from the water heater.

(c) Sensor controlled systems may be activated by wired or wireless mechanisms, including motion sensors, door switches and flow switches.

(d) Verify that sensors controls have standby power of 1 watt or less.

(e) Verify that pump and control placement for the demand recirculation meets one of the following criteria.

1. When a dedicated return line has been installed the pump, controls and thermo-sensor are installed at the end of the supply portion of the recirculation loop (typically under a sink); or

(f) The pump and controls is installed on the return line near the water heater and the thermo-sensor is installed in an accessible location as close to the end of the supply portion of the recirculation loop as possible (typically under a sink), or

(g) When the cold water line is used as the return, the pump, demand controls and thermosensor shall be installed in an accessible location at the end of supply portion of the hot water distribution line (typically under a sink).

(h) Verify that a check valve is installed in the recirculation loop to prevent unintentional circulation of the water (thermo-siphoning) and back flow when the system is not operating. This check valve may be included with the pump.

(i) The hot water distribution system piping from the water heater(s) to the fixtures and appliances must take the most direct path. For example, in a house with more than 1-story and the water heater in the garage, this requirement would exclude running hot water supply piping from the water heater to the attic, and then running the line back down to a first floor point of use.

(j) The HERS inspector shall also verify that the supply portion of each circulation loop, the first five feet of branches off the loop and the dedicated return line are insulated based on the conductivity range in TABLE 120.3-A , the insulation level shall be selected from the fluid temperature range based on the thickness requirements in TABLE 120.3-A and the insulation shall be installed in accordance with RA3.6.2. Other hot water piping shall meet the requirements of §150.0(j) and be installed in accordance with RA3.6.2. Insulation is not required on the cold water line when it is used as the return.

(k) Verify that sensor controls initiate pump operation by activating one of the sensor controls and observing that the pump turns on and then shuts off in accordance with one of the two methods listed.

1. After the pump has been activated, the controls shall allow the pump to operate until the water temperature at the thermo-sensor rises not more than 10ºF (5.6 ºC) above the initial temperature of the water in the pipe, or

2. The controls shall not allow the pump to operate when the temperature in the pipe exceeds 102ºF (38.9 ºC).

(l) Verify that the controls have a feature that limits pump operation to a maximum of 5 minutes following any activation. This is provided in the event that the normal means of shutting off the pump have failed.

(m) The manufacturer(s) of the recirculation pump and the controls shall provide installation and operation instructions that provide details of the operation of the pump and controls and such instructions shall be available at the jobsite for inspection.

RA3.6.9 HERS-Multiple Recirculation Loop Design for DHW Systems Serving Multiple Dwelling Units

The visual inspection shall verify that a central DHW system serving a building with more than eight dwelling units has at least two recirculation loops, each serving roughly the same number of dwelling. Unique building sections may have additional recirculation loops. These recirculation loops may be connected to the same water heating equipment or be connected to independent water heating equipment. The HERS inspector shall verify that:

(a) There are at least two recirculation loops each serving roughly the same number of dwelling units. Unique sections of the building may have separate loops. Ideally each loop will have its own pump and controls.

RA3.7 *Field Verification and Diagnostic Testing of Mechanical Ventilation Systems*

RA3.7.1 Purpose and Scope

RA3.7 contains procedures for measuring the airflow in mechanical ventilation systems to confirm compliance with the requirements of ASHRAE 62.2.

RA3.7 is applicable to mechanical ventilation systems in low-rise residential buildings.

RA3.7 provides required procedures for installers, HERS raters and others who are required to perform field verification of mechanical ventilation systems for compliance with Part 6.

Table RA3.7-1 – Summary of Verification and Diagnostic procedures

Diagnostic	Description	Procedure
Whole-Building Mechanical Ventilation Airflow – Continuous Operation	Verify that whole-building ventilation system complies with the airflow rate required by ASHRAE Standard 62.2.	RA7.4.1 Continuous Operation
Whole-Building Mechanical Ventilation Airflow – Intermittent Operation	Verify that whole-building ventilation system complies with the airflow rate required by ASHRAE Standard 62.2.	RA7.4.2.Intermittent Operation

RA3.7.2 Instrumentation Specifications

The instrumentation for the air distribution diagnostic measurements shall conform to the following specifications:

RA3.7.2.1 *Pressure Measurements*

All pressure measurements shall be measured with measurement systems (i.e., sensor plus data acquisition system) having an accuracy equal to or better than ± 1% of pressure reading or ± 0.2 Pa (0.0008 inches water) (whichever is greater). All pressure measurements within the duct system shall be made with static pressure probes such as Dwyer A303 or equivalent.

RA3.7.2.2 *Airflow Rate Measurements*

All measurements of ventilation fan airflow rate shall be made with an airflow rate measurement apparatus (i.e., sensor plus data acquisition system) having an accuracy equal to or better than ± 10% of reading. The apparatus shall have an accuracy specification that is applicable to the airflow rates that must be verified utilizing the procedures in Section RA3.7.4.

RA3.7.2.3 *Calibration*

All instrumentation used for mechanical ventilation system airflow rate diagnostic measurements shall be calibrated according to the manufacturer's calibration procedure to ensure the airflow measurement apparatus conforms to the accuracy requirement specified in Section RA3.7.2.2.

RA3.7.3 Diagnostic Apparatus for Measurement of Ventilation System Airflow

Ventilation system airflow rate shall be measured using one of the apparatuses listed in Section RA3.7.3. The apparatus shall produce airflow rate measurements that conform to the accuracy requirements specified in

Section RA3.7.2 for measurements of residential mechanical ventilation system airflow at system grilles or registers for single or multiple branch ventilation duct systems.

The airflow rate measurement apparatus manufacturers shall publish in their product documentation, specifications for how their airflow measurement apparatuses are to be used for accurately measuring residential mechanical ventilation system airflow at system grilles or registers of single or multiple branch ventilation systems.

The airflow measurement apparatus manufacturers shall certify to the Energy Commission that use of the apparatus in accordance with the specifications given in the manufacturer's product documentation will produce measurement results that are within the accuracy required by Section RA3.7.2.2.

For the airflow measurement apparatuses that are certified to the Commission as meeting the accuracy required by Section RA3.7.2.2, the following information will be posted on the Energy Commission website, making the information available to all people involved in the airflow verification compliance process:

(a) The product manufacturers' model numbers for the airflow measurement apparatuses.

(b) The product manufacturers' product documentation that gives the specifications for use of the airflow measurement apparatuses to accurately measure residential mechanical ventilation system airflow at system grilles or registers of single or multiple branch ventilation systems.

A manufacturer's certification to the Commission of the accuracy of the airflow measurement apparatus, and submittal to the Commission of the product documentation that specifies the proper use of the airflow measurement apparatus to produce accurate airflow rate measurements shall be prerequisites for allowing the manufacturer's airflow measurement apparatus to be used for conducting the system airflow verification procedures in Section RA3.7 for demonstrating compliance with Part 6.

RA3.7.3.1 *Residential Mechanical Exhaust Airflow Measurement Device*

A flowmeter that meets the applicable instrument accuracy specifications in RA3.7.2 shall be used to measure the mechanical exhaust airflow.

RA3.7.3.2 *Powered Flow Capture Hood Airflow Measurement Device*

A powered and pressure balanced flow capture hood (subsequently referred to as a Powered Flow Hood[3]) that has the capability to balance the flow capture static pressure difference between the room and the flow capture hood enclosure to 0.0 ± 0.2 Pa (0.0008 inches water) and meets the applicable instrumentation specifications in Section RA3.7.2 may be used to verify the ventilation airflow rate if the powered flow hood has a flow capture area at least as large as the ventilation system register/grille in all dimensions. The fan adjustment needed to balance the flow capture static pressure difference between the room and the flow capture hood enclosure to 0.0 ± 0.2 Pa (0.0008 inches water) shall be provided by either an automatic control or a manual control operated in accordance with the apparatus manufacturer's instructions specified in the manufacturer's product documentation.

RA3.7.3.3 *Traditional Flow Capture Hood*

A traditional flow capture hood[4] meeting the applicable instrumentation specifications in Section RA3.7.2 may be used to verify the ventilation system airflow rate if the non-powered flow hood has a capture area at least as large as the ventilation system register/grille in all dimensions.

RA3.7.4 Procedures

This section describes the procedures used to verify Mechanical ventilation system airflow.

3 Also known as "active" flow hood, or "fan assisted" flow hood.

4 Also known as “non-powered flow hood, "standard" flow hood, "commercially available" flow hood, or "passive" flow hood

RA3.7.4.1 *Whole-Building Mechanical Ventilation Airflow Rate Measurement - Continuous Operation*

RA3.7.4.1.1 **Exhaust Ventilation Systems**

A flow measuring device that meets the applicable instrumentation requirements of Section RA3.7.2 shall be used. If the measured airflow is equal to or greater than the value for whole-building ventilation airflow rate required by Section 4 of ASHRAE Standard 62.2, the mechanical ventilation system complies with the requirement for whole-building mechanical ventilation airflow. If the measured airflow is less than the required whole-building ventilation airflow rate, the mechanical ventilation system does not comply, and corrective action shall be taken.

RA3.7.4.1.2 **Supply Ventilation Systems**

The Executive Director may approve supply mechanical ventilation systems, devices, or controls for use for compliance with the HERS Rater field verification and diagnostic testing requirement for whole-building mechanical ventilation airflow, subject to a manufacturer providing sufficient evidence to the Executive Director that the installed mechanical ventilation systems, devices, or controls will provide at least the minimum whole-building ventilation airflow required by ASHRAE Standard 62.2, and subject to consideration of the manufacturer's proposed field verification and diagnostic test protocol for these ventilation system(s).

Approved systems, devices, or controls, and field verification and diagnostic test protocols for Supply Ventilation Systems shall be listed in directories published by the Energy Commission.

RA3.7.4.2 *Whole-Building Mechanical Ventilation Airflow Rate Measurement - Intermittent Operation*

The Executive Director may approve intermittent mechanical ventilation systems, devices, or controls for use for compliance with the HERS Rater field verification and diagnostic testing requirement whole-building mechanical ventilation airflow, subject to a manufacturer providing sufficient evidence to the Executive Director that the installed mechanical ventilation systems, devices, or controls will provide at least the minimum whole-building ventilation airflow required by ASHRAE Standard 62.2, and subject to consideration of the manufacturer's proposed field verification and diagnostic test protocol for the ventilation system(s).

Approved systems, devices, or controls, and field verification and diagnostic test protocols for intermittent mechanical ventilation systems shall be listed in directories published by the Energy Commission.

RA3.8 *Field Verification and Diagnostic Testing of Building Air Leakage*

RA3.8.1 Purpose and Scope

The purpose of this test procedure is to measure the air leakage rate through a building enclosure measured in cubic feet per minute at a 50 Pa pressure difference (CFM50). The measurement procedure described in this section is derived from Residential Energy Services Network's (RESNET) Mortgage Industry National Home Energy Rating Standards, Standard 800, which is based on ASTM E779 air tightness measurement protocols. This procedure requires the use of software consistent with ASTM E779. This test method is intended to produce a measure of the air tightness of a building envelope for determining the energy credit allowance for reduced building air leakage.

These procedures shall be used to verify the building air leakage rate before the building construction permit is finalized when an energy credit for reduced air leakage is being claimed on compliance documentation.

(a) The Home Energy Rating System (HERS) rater shall measure the building air leakage rate to ensure measured air leakage is less than or equal to the building air leakage rate stated on the Certificate of Compliance, and all other required compliance documentation. HERS verified building air leakage shall be documented on compliance forms.

(b) For purposes of this procedure *Conditioned Space Boundary* is defined as: building envelope

RA3.8.2 On-Site Inspection Protocol

There are three acceptable air leakage test procedures:

RA3.8.2.1 ***Single-Point Test:***

Measuring air leakage one time at a single pressure difference as described in Section RA3.8.6.

RA3.8.2.2 ***Multi-Point Test:***

Measuring air leakage at multiple induced pressures differences as described in Section RA3.8.7.

RA3.8.2.3 ***Repeated Single-Point Test:***

This test is similar to the single-point test, but the test is done multiple times for improved accuracy and estimating uncertainty as described in Section RA3.8.8.

The building shall be tested by applying a negative pressure. Follow all manufacturers' instructions for set up and operation of all equipment. If certain requirements of this standard cannot be met, then all deviations from the standard shall be recorded and reported.

Note: Use caution when deciding how and whether to test homes with potential airborne contaminants (e.g. fireplace ash, mold or asbestos) and refer to local, state and national protocols/standards for methods to deal with these and other contaminants.

RA3.8.3 Protocol for Preparing the Building Enclosure for Testing

RA3.8.3.1 ***Doors and Windows:***

Doors and windows that are part of the conditioned space boundary shall be closed and latched.

RA3.8.3.2 ***Attached Garages:***

All exterior garage doors and windows shall be closed and latched unless the blower door is installed between the house and the garage, in which case the garage shall be opened to outside by opening at least one exterior garage door.

RA3.8.3.3 ***Crawlspaces:***

If a crawlspace is inside the conditioned space boundary, interior access doors and hatches between the house and the crawlspace shall be opened and exterior crawlspace access doors, vents and hatches shall be closed. If a crawlspace is outside the conditioned space boundary, interior access doors and hatches shall be closed. For compliance testing purposes, crawl-space vents shall be open.

RA3.8.3.4 ***Attics:***

If an attic is inside the conditioned space boundary, interior access doors and hatches between the house and the conditioned attic shall be opened; and attic exterior access doors and windows shall be closed. If an attic is outside the conditioned space boundary, interior access doors and hatches shall be closed and exterior access doors, dampers or vents shall be left in their as found position and their position during testing shall be recorded on the test report.

RA3.8.3.5 ***Interior Doors:***

Interior doors shall be open within the Conditioned Space Boundary. See the definition of “Conditioned Space Boundary” for clarification.

RA3.8.3.6 ***Chimney Dampers and Combustion-Air Inlets on Solid Fuel Appliances:***

Dampers shall be closed. Take precautions to prevent ashes or soot from entering the house during testing. Although the general intent of this standard is to test the building in its normal operating condition, it may be necessary to temporarily seal openings to avoid drawing soot or ashes into the house. Any temporary sealing shall be noted in the test report.

RA3.8.3.7 ***Combustion Appliance Flue Gas Vents:***

Combustion appliance flue gas vents shall be left in their normal appliance-off condition.

RA3.8.3.8 ***Fans:***

Any fan or appliance capable of inducing airflow across the building enclosure shall be turned off including, but not limited to, clothes dryers, attic fans, kitchen and bathroom exhaust fans, outdoor air ventilation fans, air handlers, and crawl space and attic ventilation fans. Continuously operating ventilation systems shall be turned off and the air openings sealed, preferably at the exterior terminations.

RA3.8.3.9 ***Non-Motorized Dampers Which Connect the Conditioned Space to the Exterior or to Unconditioned Spaces:***

Dampers shall be left as found. If the damper will be forced open or closed by the induced test pressure, that fact shall be reported in the test report. Clothes dryer exhaust openings should not be sealed off even if there is no dryer attached but this fact should be noted in the test report.

RA3.8.3.10 ***Motorized Dampers Which Connect the Conditioned Space to the Exterior (or to Unconditioned Spaces):***

The damper shall be placed in its closed position and shall not be further sealed.

RA3.8.3.11 ***Undampered or Fixed-Damper Intentional Openings Between Conditioned Space and the Exterior or Unconditioned Spaces:***

Undampered or fixed damper intentional openings between conditioned space and the exterior or unconditioned spaces shall be left open or fixed position; however, temporary blocking shall be removed. For example: fixed-dampered ducts supplying outdoor air for intermittent ventilation systems (including central-fan-integrated distribution systems) shall be left in their fixed-damper position. Exception: Undampered supply-air or exhaust-air openings of continuously operating mechanical ventilation systems shall be sealed (preferably seal at the exterior of enclosure) and ventilation fans shall be turned off as specified above.

RA3.8.3.12 ***Whole Building Fan Louvers/Shutters:***

Whole building fan louvers/shutters shall be closed. If there is a seasonal cover, it shall be installed.

RA3.8.3.13 ***Evaporative Coolers:***

The opening to the exterior shall be placed in its off condition. If there is a seasonal cover, it shall be installed.

RA3.8.3.14 ***Operable Window Trickle-Vents and Through-The-Wall Vents:***

Operable window trickle vents and through-the-wall vents shall be closed and/or sealed.

RA3.8.3.15 ***Supply Registers and Return Grilles:***

Supply registers and return grilles shall be left open and uncovered.

RA3.8.3.16 ***Plumbing Drains With P-Traps:***

Plumbing drains with P-traps shall be sealed, or filled with water if empty.

RA3.8.3.17 ***Combustion Appliances:***

Combustion appliances shall remain off during the test. Maintain the above conditions throughout the test. If during the test, induced pressures affect operable dampers, seasonal covers, etc., reestablish the set-up and consider reversing direction of fan flow.

After testing is complete, return the building to its as found conditions prior to the test. For example, make sure that any combustion appliance pilots that were on prior to testing remain lit after testing.

RA3.8.4 Accuracy Levels for Enclosure Leakage Testing

RA3.8.4.1 ***Standard Level of Accuracy:***

Level of accuracy that produces test results that can be used in approved modeling software to determine performance compliance with the Standards.

RA3.8.4.2 ***Reduced Level of Accuracy:***

During adverse testing conditions or in certain applications where testing time and costs are a factor, a test with a reduced level of accuracy may be used. Measurements made with a reduced level of accuracy may require surpassing the threshold value by an amount which will account for the added uncertainty as defined in the sections below. Software the uses test results with a reduced level of accuracy shall internally adjust the calculation in accordance with these procedures.

RA3.8.5 Installation of the Blower Door Air Tightness Testing System and Preliminary Recordings

RA3.8.5.1

Install the blower door system in an exterior doorway or window that has unrestricted access to the building and no obstructions to airflow within five feet of the fan inlet and two feet of the fan outlet. Avoid installing the system in a doorway or window exposed to the wind.

RA3.8.5.2

It is permissible to use a doorway or window between the conditioned space and unconditioned space as long as the unconditioned space has an unrestricted air pathway to the outdoors. For example, an attached garage or porch can be used as the unconditioned space. In this case, be sure to open all exterior windows and doors of the unconditioned space to the outdoors.

RA3.8.5.3

Install the pressure gauge(s), fans and tubing connections according to the equipment manufacturer's instructions.

RA3.8.5.4

Record the indoor and outdoor temperatures in degrees F to an accuracy of 5 degrees F.

RA3.8.5.5

Record the elevation of the building site within 1000 feet for buildings at elevations above 5000 feet above sea level.

RA3.8.5.6

For ACH50 (i.e., air changes per hour @ 50 Pa), record the *building volume*.

RA3.8.6 Procedure for Conducting a Single-Point Air Tightness Test

RA3.8.6.1

Choose and record a *time averaging period* of at least 10 seconds to be used for measuring pressures. With the blower door fan sealed and off, measure and record five (5), independent, *average baseline building pressure readings* with respect to outside to a resolution of 0.1 Pa.

RA3.8.6.2

Subtract the smallest baseline measurement from the largest recorded in Step RA3.8.6.1 and record this as the *baseline range*.

RA3.8.6.3

Air tightness tests with a baseline range less than 5.0 Pa, will be considered a *Standard Level of Accuracy Test*. Air tightness tests with a baseline range between 5.0 Pa - 10 Pa will be considered a *Reduced Level of Accuracy Test* and the results will be adjusted using Section RA3.8.4.2. A Single-Point test cannot be performed under this standard if the baseline range is greater than 10.0 Pa. Record the level of accuracy for

the test as *Standard* or *Reduced*. The baseline test may be repeated employing a longer time averaging period in order to meet the desired level of accuracy.

RA3.8.6.4

Re-measure the baseline building pressure using the same time averaging period recorded in Section RA3.8.6.1 or use the average of the baseline pressures measured in Section RA3.8.6.1. This measurement is defined as the *Pre-Test Baseline Building Pressure*. If desired for greater accuracy, a longer time averaging period may be used. Record the *Pre-Test Baseline Building Pressure*.

RA3.8.6.5

Unseal the blower door fan. Turn on and adjust the fan to create an induced building pressure of approximately 50 Pa. Induced building pressure shall be defined as the (unadjusted) building pressure minus the pre-test baseline building pressure. If a 50 Pa induced building pressure cannot be achieved because the blower door fan does not have sufficient flow capacity, then achieve the highest induced building pressure possible with the equipment available.

RA3.8.6.6

A single-point test may only be performed if the maximum induced building pressure is at least 15 Pa and greater than four times the baseline pressure. If the maximum induced building pressure is less than 15 Pa, recheck that the house set up is correct and determine if any basic repairs are needed prior to further testing. A multi-point test may be attempted, or multiple fans may be used. If using multiple fans, follow the manufacturer's instruction for measurement procedures.

RA3.8.6.7

Measure and record the unadjusted building pressure and nominal (not temperature and altitude corrected) fan flow using the same averaging period used in Section RA3.8.6.4. Record the unadjusted building pressure (with 0.1 Pa resolution), nominal fan flow (with 1 CFM resolution), fan configuration (i.e., rings, pressurization or depressurization, etc), fan and manometer models and serial numbers.

RA3.8.6.8

Turn off the fan.

RA3.8.6.9

If the equipment's pressure gauge has the capability to display the induced building pressure (i.e., "baseline adjustment" feature) and adjust the fan flow value to an induced building pressure of 50 Pa (i.e., "@50 Pa" feature), then follow the manometer manufacturer's procedures for calculating the results of a single-point test and record the following values: induced building pressure, nominal CFM50, fan configuration, fan and manometer model and serial numbers. If needed calculate the following values:

(a) *Induced Building Pressure* = measured building pressure minus the *Pre-Test Baseline Building Pressure*

Note: If a "baseline adjustment" feature of the manometer was used, the induced building pressure is displayed on the pressure gauge.

(b) *Nominal CFM50* = (50 / induced building pressure)$^{0.65}$ x recorded fan flow

Note: If both a "baseline adjustment" feature and an "@50 Pa" feature were used, the nominal CFM50 is displayed directly on the pressure gauge.

If the altitude is above 5,000 feet or the difference between the inside and outside temperature is more than 30 degrees F, calculate the corrected CFM50 as defined below:

(c) *Corrected CFM50* = nominal CFM50 x altitude correction factor x temperature correction factor

Where: *Altitude correction factor* = 1 + .000006 x altitude. Note: altitude is in feet, temperature correction factors are listed in Tables RA3.8-2 and RA3.8-3.

RA3.8.7 Procedure for Conducting a Multi-Point Air Tightness Test

RA3.8.7.1

Equipment that can automatically perform a Multi-Point Test may be used to perform the steps below.

RA3.8.7.2

With the blower door fan sealed and off, measure and record the pre-test baseline building pressure reading with respect to outside. This measurement shall be taken over a time-averaging period of at least 10 seconds and shall have a resolution of 0.1 Pa. Record the pre-test baseline building pressure measurement.

RA3.8.7.3

Unseal the blower door fan. Turn on and adjust the fan to create an induced building pressure of approximately 60 Pa. If a 60 Pa induced building pressure cannot be achieved because the blower door fan does not have sufficient flow capacity, then adjust the fan to achieve the highest induced building pressure possible.

RA3.8.7.4

Measure the *unadjusted building pressure* (not baseline adjusted) and nominal fan flow (neither temperature nor altitude corrected) using the same time-averaging period used in Section RA3.8.7.2. Record the unadjusted building pressure (with 0.1 Pa resolution), nominal fan flow (with 1 CFM resolution), fan configuration, fan model and fan serial number. Assure that the fan is being operated according to the manufacturer's instructions.

Note: Since both pre- and post-test baseline measurements are required, do not use any baseline-adjustment feature of the manometer. In addition, do not use an "@50 Pa" feature because the nominal fan flow shall be recorded.

RA3.8.7.5

Take and record a minimum of seven (7) additional unadjusted building pressure and nominal fan flow measurements at *target induced pressures* which are approximately equally-spaced between 60 Pa (or the highest achievable induced building pressure) and 15 Pa. In very leaky buildings, the low end of this range may be reduced to as little as 4 Pa plus the absolute value of the baseline pressure.

RA3.8.7.6

Turn off and seal the blower door fan.

RA3.8.7.7

Measure and record the *post-test baseline building pressure* reading with respect to outside. This measurement shall be taken over the same time-averaging period used in Section RA3.8.7.2 and shall have a resolution of 0.1 Pa. Record the post-test baseline building pressure measurement.

RA3.8.7.8

Enter the recorded test values, temperatures and altitude into software that can perform the necessary calculations in accordance with ASTM E779-10, Section 9.

The software program shall calculate and report: corrected CFM50 and the percent uncertainty in the corrected CFM50, at the 95% confidence level, as defined in ASTM E779-10, Section 9.

Note: To avoid a higher percent uncertainty than desired, the HERS rater may choose a larger, time-averaging period and start over at Section RA3.8.7.2.

RA3.8.7.9

If the reported uncertainty in the corrected CFM50 is less than or equal to 10.0%, the air tightness test shall be classified as a *Standard Level of Accuracy Test*. If the reported uncertainty in the corrected CFM50 is greater than 10%, the air tightness test shall be classified as a *Reduced Level of Accuracy Test* and the results shall be adjusted using Section RA3.8. 12.

RA3.8.8 Procedure for Conducting a Repeated Single-Point Test

RA3.8.8.1

With the blower door fan sealed and off, measure and record the pre-test baseline building pressure reading with respect to outside. This measurement shall be taken over a time-averaging period of at least 10 seconds and shall have a resolution of 0.1 Pa. Record this value as the pre-test baseline building pressure measurement.

RA3.8.8.2

Unseal the blower door fan. Turn on and adjust the fan to create an induced building pressure of approximately 50 Pa. If a 50 Pa induced building pressure cannot be achieved because the blower door fan does not have sufficient flow capacity, then achieve the highest induced building pressure possible with the equipment available.

RA3.8.8.3

If during any single repeat of this test, the induced building pressure is less than 15 Pa, recheck that the house set up is correct and determine if any basic repairs are needed prior to further testing or modeling of the building. Following any repairs or changes to the set up, the test shall be restarted from the beginning. If at least 15 Pa cannot be reached every time, then use the procedures in Sections RA3.8.6 or RA3.8.7.

RA3.8.8.4

Measure and record the *unadjusted building pressure* and nominal (not temperature and altitude corrected) *fan flow* using the same time-averaging period used in Section RA3.8.7.2. Record the *unadjusted building pressure* (with 0.1 Pa resolution), *nominal fan flow* (with 1 CFM resolution), *fan configuration* (i.e., *rings*, *pressurization* or *depressurization*, etc), *fan model* and fan *serial number*.

Note: If the equipment's pressure gauge has the capability to display the induced building pressure (i.e. baseline adjustment feature) and the capability to adjust the fan flow value to an induced building pressure of 50 Pa (i.e. “@50 Pa” feature), then follow the manufacturer’s procedures for calculating the results of a Single-Point Test and record the following values: *induced building pressure*, *nominal CFM50*, *fan configuration*, *fan model* and *fan serial number*.

RA3.8.8.5

Turn off the fan.

RA3.8.8.6

Calculate the following values:

(a) *Induced Building Pressure* = unadjusted building pressure (Pa) minus pre-test baseline building pressure (Pa).

Note: If a baseline adjustment feature was used, then the induced building pressure is displayed on the pressure gauge.

(b) *Nominal CFM50* = (50 Pa / Induced building pressure)$^{0.65}$ x nominal fan flow.

Note: If both a baseline adjustment feature and an "@50 Pa" feature were used, the nominal CFM50 is displayed directly on the pressure gauge.

RA3.8.8.7

Repeat Sections RA3.8.8.1 through RA3.8.8.7 until a minimum of 5 nominal CFM50 estimates have been recorded. The same fan configuration shall be used for each repeat.

RA3.8.8.8

Calculate the *Average Nominal CFM50* by summing the individual nominal CFM50 readings and dividing by the number of readings.

RA3.8.8.9

If the altitude is above 5,000 feet or the difference between the inside and outside temperature is more than 30 degrees F, calculate the corrected CFM50 as defined below:

Average Corrected CFM50 = *Average Nominal CFM50* x altitude correction factor x temperature correction factor

Where: *Altitude correction factor* = 1 + .000006 x altitude. Note: altitude is in feet, temperature correction factors are listed in Tables RA3.8-2 and RA3.8-3.

RA3.8.8.10

Estimate the precision uncertainty using one of the two following methods.

RA3.8.8.10.1

Standard Statistical Process – Use a calculator or computer to compute the Standard Deviation of the repeated Nominal CFM50 readings. Divide this Standard Deviation by the square root of the number of readings. Multiply the result by the t-statistic in Table RA3.8-1 corresponding to the number of readings taken. Convert this result to a percentage of the Average Nominal CFM50.

Table 3.8-1 Precision Uncertainty: Values of t-statistic

Number of Readings	t-statistic
5	2.78
6	2.57
7	2.45
8	2.37
9	2.31

RA3.8.8.11

If a software program is used, it shall at minimum calculate and report:

(a) *Average CFM50*, corrected for altitude and temperature.

(b) *Record the percent uncertainty of the measured CFM50* at the 95% confidence level, as calculated in Section RA8.8.9.

(c) *ACH50 (air changes per hour @ 50 Pa)* = (CFM50 x 60) / building volume (in cubic feet).

RA3.8.8.12

If the reported uncertainty of the CFM50 is less than or equal to 10.0%, then the air tightness test shall be classified as a *Standard Level of Accuracy Test* as defined in Section RA3.8.4.1. If the reported uncertainty in the CFM50 is greater than 10.0%, the air tightness test shall be classified as a *Reduced Level of Accuracy Test* as defined in Section RA3.8.4.2.

RA3.8.9 Application Results

RA3.8.9.1

Adjusting CFM50 for tests with a *Reduced Level of Accuracy*. When using results of a Reduced Level of Accuracy Test, an adjustment shall be used to improve the probability that the tested building meets the required performance threshold. The adjusted CFM50 in these situations is defined as:

Adjusted CFM50 = extending factor x corrected CFM50

Where:

For a single-point test at Reduced Level of Accuracy: extending factor = 1 + 0.1 x (50 / the induced pressure)

For a multi-point test at Reduce Level of Accuracy: extending factor = 1 + (% uncertainty / 100)

Adjusted CFM50 value shall be used when:

Determining whether a building meets an air tightness threshold as stated on compliance forms

Adjusted CFM50 value shall NOT be used when:

(a) Calculating the air tightness of a retrofit building

(b) Calculating an energy audit

(c) Assessing the air tightness of a group of buildings

RA3.8.10 Other Leakage Metrics:

ELA may be calculated by: *ELA* = 0.055 x CFM50

Where: ELA is in square inches

ACH50 = corrected CFM50 x 60 / building volume (in cubic feet)

Specific Leakage Area may be calculated by: *SLA* = 0.00694 x ELA/ building floor area (square feet)

Where: ELA is in square inches

Normalized Leakage Area may be calculated by: *NLA* = SLA x $(S)^{0.3}$

Where: S is the number of stories above grade

RA3.8.11 Equipment Accuracy and Requirements

Blower door fans used for building air leakage testing shall measure airflow (after making any necessary air density corrections) with an accuracy of +/- 5%. Pressure gauges shall measure pressure differences with a resolution of 0.1 Pa and have an accuracy of +/- 1% of reading or 0.5Pa, whichever is greater.

Blower door and associated pressure testing instruments shall be tested annually for calibration by the HERS Provider or HERS rater. The HERS Provider or HERS rater shall use a standard for field testing of calibration provided by the equipment manufacturer. Magnehelic Gauges cannot be field tested and shall be recalibrated by the Blower Door manufacturer annually. Fan and flow measuring systems for shall be regularly field checked for defects and maintained according to manufacturers' recommendations. The HERS Provider or HERS rater shall maintain a written log of the annual calibration check to verify all equipment accuracy for a period of three (3) years. These records shall be made available to the Commission.

RA3.8.12 Air Leakage Reporting

The HERS rater shall compare the measured air leakage rate determined by Section RA 3.8.8.12 or RA3.8.9 to the building air leakage rate specified on the Certificate of Compliance, and all other required compliance documentation. HERS verified building air leakage shall be documented on compliance forms.

Where: *Measured air leakage rate* = *Adjusted CFM50*

Table RA3.8-2- Temperature Correction Factors for Pressurization Testing- Calculated according to ASTM E779-10

		Inside Temperature (F)								
		50	**55**	**60**	**65**	**70**	**75**	**80**	**85**	**90**
Outside Temp (F)	**-20**	1.062	1.072	1.081	1.090	1.099	1.108	1.117	1.127	1.136
	-15	1.056	1.066	1.075	1.084	1.093	1.102	1.111	1.120	1.129
	-10	1.051	1.060	1.069	1.078	1.087	1.096	1.105	1.114	1.123
	-5	1.045	1.054	1.063	1.072	1.081	1.090	1.099	1.108	1.117
	0	1.039	1.048	1.057	1.066	1.075	1.084	1.093	1.102	1.111
	5	1.033	1.042	1.051	1.060	1.069	1.078	1.087	1.096	1.105
	10	1.028	1.037	1.046	1.055	1.064	1.072	1.081	1.090	1.099
	15	1.023	1.031	1.040	1.049	1.058	1.067	1.076	1.084	1.093
	20	1.017	1.026	1.035	1.044	1.052	1.061	1.070	1.079	1.087
	25	1.012	1.021	1.029	1.038	1.047	1.056	1.064	1.073	1.082
	30	1.007	1.015	1.024	1.033	1.041	1.050	1.059	1.067	1.076
	35	1.002	1.010	1.019	1.028	1.036	1.045	1.054	1.062	1.071
	40	0.997	1.005	1.014	1.023	1.031	1.040	1.048	1.057	1.065
	45	0.992	1.000	1.009	1.017	1.026	1.035	1.043	1.051	1.060
	50	0.987	0.995	1.004	1.012	1.021	1.029	1.038	1.046	1.055
	55	0.982	0.990	0.999	1.008	1.016	1.024	1.033	1.041	1.050
	60	0.997	0.986	0.994	1.003	1.011	1.019	1.028	1.036	1.045
	65	0.973	0.981	0.989	0.998	1.006	1.015	1.023	1.031	1.040
	70	0.968	0.976	0.985	0.993	1.001	1.010	1.018	1.026	1.035
	75	0.963	0.972	0.980	0.988	0.997	1.005	1.013	1.022	1.030
	80	0.959	0.967	0.976	0.984	0.992	1.000	1.009	1.017	1.025
	85	0.955	0.963	0.971	0.979	0.988	0.996	1.004	1.012	1.020
	90	0.950	0.958	0.967	0.975	0.983	0.991	0.999	1.008	1.016
	95	0.946	0.954	0.962	0.970	0.979	0.987	0.995	1.003	1.011
	100	0.942	0.950	0.958	0.966	0.970	0.982	0.990	0.998	1.007
	105	0.938	0.946	0.954	0.962	0.970	0.978	0.986	0.994	1.002
	110	0.933	0.942	0.950	0.952	0.966	0.974	0.982	0.990	0.998

Table RA3.8-3 Temperature Correction Factors for Depressurization Testing- Calculated according to ASTM E779-10

		Inside Temperature (F)								
		50	**55**	**60**	**65**	**70**	**75**	**80**	**85**	**90**
Outside Temp (F)	**-20**	0.865	0.861	0.857	0.853	0.849	0.845	0.841	0.837	0.833
	-15	0.874	0.870	0.866	0.862	0.858	0.854	0.850	0.846	0.842
	-10	0.883	0.879	0.874	0.870	0.866	0.862	0.858	0.854	0.850
	-5	0.892	0.887	0.883	0.879	0.875	0.871	0.867	0.863	0.859
	0	0.900	0.896	0.892	0.887	0.883	0.879	0.875	0.871	0.867
	5	0.909	0.905	0.900	0.896	0.892	0.888	0.883	0.879	0.875
	10	0.918	0.913	0.909	0.905	0.900	0.896	0.892	0.888	0.884
	15	0.927	0.922	0.918	0.913	0.909	0.905	0.900	0.896	0.892
	20	0.935	0.931	0.926	0.922	09.17	0.913	0.909	0.905	0.900
	25	0.944	0.939	0.935	0.930	0.926	0.922	0.917	0.913	0.909
	30	0.952	0.948	0.943	0.939	0.934	0.930	0.926	0.921	0.917
	35	0.961	0.956	0.952	0.947	0.943	0.938	0.934	0.930	0.926
	40	0.970	0.965	0.960	0.956	0.951	0.947	0.942	0.938	0.934
	45	0.978	0.974	0.961	0.964	0.960	0.955	0.951	0.946	0.942
	50	0.987	0.982	0.977	0.973	0.968	0.963	0.959	0.955	0.950
	55	0.995	0.990	0.986	0.981	0.976	0.972	0.967	0.963	0.958
	60	1.004	0.999	0.994	0.998	0.985	0.980	0.976	0.971	0.967
	65	1.012	1.008	1.003	0.998	0.993	0.988	0.984	0.979	0.975
	70	1.021	1.016	1.011	1.006	1.001	0.997	0.992	0.988	0.983
	75	1.029	1.024	1.019	1.015	1.010	1.005	1.000	0.996	0.991
	80	1.038	1.033	1.028	1.023	1.018	1.013	1.009	1.004	0.999
	85	1.046	1.041	1.036	1.031	1.026	1.022	1.017	1.012	1.008
	90	1.055	1.050	1.045	1.040	1.035	1.030	1.025	1.020	1.016
	95	1.063	1.058	1.053	1.048	1.043	1.038	1.033	1.028	1.024
	100	1.072	1.066	1.061	1.056	1.051	1.046	1.041	1.037	1.032
	105	1.080	1.075	1.070	1.064	1.059	1.054	1.050	1.045	1.040
	110	1.088	1.083	1.078	1.073	1.068	1.063	1.058	1.053	1.048

Residential Appendix RA4

Appendix RA4 – Eligibility Criteria for Energy Efficiency Measures

Table of Contents

Appendix RA4 Appendix RA4 – Eligibility Criteria for Energy Efficiency Measures 1

RA4.1 Purpose and Scope 2

This appendix contains the eligibility requirements which must be met when any of the following features are installed to achieve compliance with the residential building energy efficiency standards. 2

RA4.2 Building Envelope Measures 2

RA4.2.1 Radiant Barriers 2

RA4.2.2 Fenestration Including Dynamic Glazing 3

RA4.2.3 Window Film 3

RA4.3 HVAC Measures 4

RA4.3.1 Ice Storage Air Conditioner (ISAC) Systems 4

RA4.3.2 Evaporatively-Cooled Condensing Units 5

RA4.3.3 Evaporative Cooling 7

RA4.4 Water Heating Measures 7

RA4.4.1 Proper Installation of Pipe Insulation 7

RA4.4.2 The Standard Distribution System (STD) 8

RA4.4.3 Pipe Insulation Credit (PIC) 8

RA4.4.4 Central Parallel Piping (PP) 8

RA4.4.5 Compact Hot Water Distribution System (CHWDS) 8

RA4.4.6 Point of Use (POU) 9

RA4.4.7 Recirculation Systems 8

RA4.4.8 HERS-Verified Pipe Insulation Credit (PIC-H) 11

RA4.4.9 HERS-Verified Parallel Piping (PP-H) 11

RA4.4.10 HERS-Verified Compact Hot Water Distribution System (CHWDS-H) 11

RA4.4.11 HERS-Verified Point of Use (POU-H) 12

RA4.4.12 HERS-Verified Demand Recirculation: Manual Control (RDRmc-H) 13

RA4.4.13 HERS-Verified Demand Recirculation: Sensor Control (RDRsc-H) 13

RA4.4.14 HERS-Verified Multiple Recirculation Loops for DHW Systems Serving Multiple Dwelling Units 13

RA4.4.15 Solar Water Heating Systems 13

RA4.5 Other Measures 14

RA4.5.1 Controlled Ventilation Crawlspace (CVC) 14
RA4.5.2 Sunspace 14
RA4.5.3 Multiple Orientations Compliance 14
RA4.6 Solar Electric Systems 15
RA4.6.1 Photovoltaic Systems 15

RA4.1 *Purpose and Scope*

RA4.2 *This appendix contains the eligibility requirements which must be met when any of the following features are installed to achieve compliance with the residential building energy efficiency standards. Building Envelope Measures*

RA4.2.1 Radiant Barriers

Radiant barriers shall meet specific eligibility and installation criteria to be modeled by any compliance software and receive energy credit for compliance with the Building Energy Efficiency Standards for low-rise residential buildings.

The emittance of the radiant barrier shall be less than or equal to 0.05 as tested in accordance with ASTM C1371 or ASTM E408.

Installation shall conform to ASTM C1158 (Standard Practice for Installation and Use of Radiant Barrier Systems (RBS) in Building Construction), ASTM C727 (Standard Practice for Installation and Use of Reflective Insulation in Building Constructions), ASTM C1313 (Standard Specification for *Sheet Radiant Barriers for Building Construction Applications*), and ASTM C1224 (*Standard Specification for Reflective Insulation for Building Applications*), and the radiant barrier shall be securely installed in a permanent manner with the shiny side facing down toward the interior of the building (ceiling or attic floor). Moreover, radiant barriers shall be installed at the top chords of the roof truss/rafters in any of the following methods:

(a) Draped over the truss/rafter (the top chords) before the upper roof decking is installed.

(b) Spanning between the truss/rafters (top chords) and secured (stapled) to each side.

(c) Secured (stapled) to the bottom surface of the truss/rafter (top chord). A minimum air space shall be maintained between the top surface of the radiant barrier and roof decking of not less than 1.5 inches at the center of the truss/rafter span.

(d) Attached [laminated] directly to the underside of the roof decking. The radiant barrier shall be laminated and perforated by the manufacturer to allow moisture/vapor transfer through the roof deck.

(e) In addition, the radiant barrier shall be installed to cover all gable end walls and other vertical surfaces in the attic.

RA4.2.1.1 *For Prescriptive Compliance: The attic shall be ventilated to:*

(a) Provide a minimum free ventilation area of not less than one square foot of vent area for each 300 ft² of attic floor area.

(b) Provide no less than 30 percent upper vents.

(c) Ridge vents or gable end vents are recommended to achieve the best performance. The material should be cut to allow for full airflow to the venting.

(d) The product shall meet all requirements for California certified insulation materials [radiant barriers] of the Department of Consumer Affairs, Bureau of Home Furnishings and Thermal Insulation, as specified by CCR, Title 24, Part 12, Chapter 12-13, Standards for Insulating Material.

(e) The use of a radiant barrier shall be listed in the Special Features and Modeling Assumptions listings of the Certificate of Compliance and described in detail in the Residential ACM ManualConform to the radiant barrier manufacturer's instructions.

RA4.2.2 Fenestration Including Dynamic Glazing

For each manufactured fenestration products including dynamic glazing a temporary NFRC Label or a temporary Default Label will be attached to each fenestration product. The labels shall remain attached to the fenestration product until the building inspector verifies the efficiencies.

Before installation the installer or responsible party shall fill out the Installation Certificate form for the fenestration including dynamic glazing and verify the efficiencies (e.g. U-factor and SHGC) matches the Certificate of Compliance and the building plans. A copy of the Installation Certificate shall remain at the job site and a copy given to the building owner and the enforcement agency for their records.

RA4.2.2.1 ***Installer Shall Verify:***

(a) Name of the manufacture, brand name, model matches building plans or energy compliance forms;

(b) That each manufactured fenestration product shall be provided with a temporary NFRC Label Certificate or a Default Label to identify the thermal performance (e.g. U-factor, and SHGC) of each fenestration product being installed.

(c) Identify the azimuth orientation in degrees or in cardinal orientation for each of the installed fenestration products and annotated on the Installation Certificate;

(d) If no NFRC Label is included on the fenestration, then verify with the Responsible Person of the building construction or enforcement agency to ensure the fenestration product used actually meets or exceeds the energy specifications;

(e) For dynamic glazing; to ensure reliable proper control operation, the controls shall be installed and verified to meet manufactures operation specifications. A copy of the User Manual shall be provided to the building owner;

(f) The installer completes and signs the Declaration Statement on the Installation Certificate and signed copy of the Installation Certificate(s) shall remain at the job site; and

(g) A copy shall be given to the building owner and the enforcement agency for their records.

RA4.2.2.2 ***Window Film***

These procedures detail the installation protocols necessary for window films. Each window film product to be installed is provided with a temporary NFRC Label on the box to identify the thermal performance efficiencies (e.g. U-factor, Solar Heat Gain Coefficient (SHGC), and Visible Transmittance (VT)). The labels shall be located at the job site for verification by the enforcement agency. In addition, the responsible person or the installer shall fill out the Installation Certificate and shall verify the thermal performance efficiencies of each window film to be installed matches the energy Certificate of Compliance documentation and the building plans orientation schedule. A copy of the Installation Certificates shall be given to the building owner and the enforcement agency for their records along with other window film information.

RA4.2.2.3 *The Responsible Person or Installer Shall Verify Before Installation;*

(a) Name of the manufacture, brand name, model matches building plans or energy compliance forms;

(b) From the building plans or energy compliance documentation identify the azimuth orientation in degrees or in cardinal orientation for each of the window film to be installed to ensure the correct window film type is installed in the appropriate orientation;

(c) Verify the temporary NFRC label on the box for each window film's U-factor, Solar Heat Gain (SHGC) and Visible Transmittance (VT) matches the energy compliance documentation and building plans;

(d) List the NFRC Certified Product Directory (CPD) identification number provided on the label on the Installation Certificate form;

(e) If no NFRC Label is included on the box or identification of the window film, then verify with the Responsible Person of the building construction or enforcement agency to ensure the window film used actually meets or exceeds the energy specifications;

(f) Installation of window films shall follow the International Window Film Association (IWFA) Visual Quality Standards for Applied Window Film (dated May 15, 1999); and,

(g) After the installation, the installer completes and signs the Declaration Statement on the Installation Certificate.

RA4.2.2.4 *Documentation at Occupancy*

The following documentation shall be made available to the building owner at occupancy:

(a) Completed and signed Installation Certificate form(s);

(b) The IWFA Visual Quality Standards for Applied Window Film (dated May 15, 1999), a copy can be obtained through www.iwfa.com;

(c) A sample (8" by 10") of the film installed with a copy of its Performance Specification Sheet attached; and

(d) A 10 or more year Warranty Certificate(s) shall be given to the building owner.

RA4.3 *HVAC Measures*

RA4.3.1 Ice Storage Air Conditioner (ISAC) Systems

To ensure reliable energy savings and proper operation and control, the ISAC system shall conform to the eligibility criteria in section RA4.3.1. The eligibility criteria include compliance with third-party field verification of the ISAC's model number by a certified HERS rater utilizing the system equipment verification procedure in Reference Residential Appendix RA3.4.4.2, and duct sealing as confirmed by field verification and diagnostic testing in accordance with the applicable requirements in Section RA3.1. Compliance with the eligibility requirements requires the installer to verify of the presence and proper operation of required controls.

The builder or installer shall provide a Certificate of Compliance that reports the use of an ISAC the system for determining performance standards compliance, that requires HERS verification of the system equipment, and duct sealing for compliance.

RA4.3.1.1 *HERS Verification*

The following shall be verified by a HERS rater and reported on a Certificate of Verification for the system:

(a) The model number of the installed unit is for a unit that the Energy Commission has approved for compliance credit and matches the model number used for compliance credit.

(b) The duct system has been sealed and tested in accordance with all applicable requirements in Reference Appendix RA3.1.

(c) For systems that require charging of the refrigerant lines either a Charge Indicatory Display (CID) or refrigerant change test shall be provided. The CID or refrigerant charge credit shall not be taken.

RA4.3.1.2 ***Eligibility Testing***

The installing contractor shall complete the following eligibility testing and document the results on the applicable Certificate of Installation.

(a) Verify that building cooling is controlled by a standard indoor HVAC thermostat and not by factory-installed controls.

(b) Verify that ice making is not controlled by the thermostat.

(c) Verify that the water tank is filled to the proper level as specified by the manufacturer.

(d) Verify that the correct model number is installed as indicated in compliance documents (including ice melt start time). Certify the installed model number on the CF-1R form.

(e) Force the controls to indicate no demand for cooling, set the time to be within the nighttime period, and simulate that the tank is not full with ice. Verify that the system operates properly in the ice-making mode (i.e., it starts charging the tank and does not provide cooling to the building).

(f) Force the controls to indicate no demand for cooling, set the time to be within the nighttime period, and simulate the tank being full of ice. Verify that the system operates properly in the idle mode (i.e., the compressor is off, and no cooling is provided by the system).

(g) Force the controls to indicate a demand for cooling and set the time to be within the daytime period. Verify that the system operates properly in the ice melt mode (i.e., it starts discharging and that the compressor is off).

(h) Force the controls to indicate a demand for cooling and set the time to be within the morning shoulder time period. Verify that the system operates properly in the direct cooling mode (i.e., the system is providing cooling with the compressor).

(i) Force the controls to indicate no cooling load, and set the time to be within the daytime period. Verify that the system operates properly in the idle mode (i.e., it does not provide cooling to the building and the compressor is off).

(j) Force the controls to indicate a demand for cooling and set the time to be within the nighttime period. Verify that the cooling is provided by the compressor.

RA4.3.2 Evaporatively-Cooled Condensing Units

To ensure reliable energy savings and proper operation and control, the evaportively-cooled condensing unit shall conform to the requirements in section RA4.3.2.

The HERS verifications and eligibility testing listed in sections RA4.3.2.1 and RA4.3.2.2 shall be completed, certified by the HVAC installer on the Certificate of Installation, and verified by a HERS Rater on the Certificate of Verification.

The builder or installer shall provide a Certificate of Compliance that reports the use of an evaporatively-cooled condensing unit for determining performance standards compliance, that requires HERS verification of the system equipment, duct sealing, and refrigerant charge for compliance as described in Section RA4.3.2.1.

RA4.3.2.1 ***HERS Verification***

The following shall be verified by a HERS rater and reported on a Certificate of Verification for the system:

(a) EER at 95 ^{o} F dry bulb and 75 ^{o} F wet bulb temperature is listed with ARI (generally called EERa).

(b) EER at 82 ^{o} F dry bulb and 65 ^{o} F wet bulb temperature is submitted to ARI and published by the manufacturer in accordance with ARI guidelines (generally called EERb).

(c) Presence of TXV is verified, if the ARI certified EERs are based on equipment with TXVs.

(d) Ducts are tested and sealed in all installations of this equipment according to applicable requirements in Section RA3.1.

(e) Proper refrigerant charge or presence of Charge Indicator Display (CID) is verified if compliance credit is taken for this measure when TXVs are not installed.

RA4.3.2.2 ***Eligibility Testing Eligibility Testing***

The installing contractor shall complete the following eligibility testing and document the results on the applicable Certificate of Installation.

(a) Verify that there is water in the water casing.

(b) Switch on the cooling system by setting the thermostat below the room temperature.

(c) Verify that the water pump starts running when the system is turned on.

(d) When the water pump is running, verify that all the condenser coils are wet.

(e) Verify that the high pressure trip for the compressor is set (per manufacturer's specifications) at or below 300 psig for R22 Refrigerant and at or below the saturation pressure corresponding to a temperature of 131^{0} F for all other refrigerants.

(f) Turn off the water supply to the water casing, drain the water from the sump, and verify that the water pump and the compressor trip.

(g) Verify that the condenser coils have a corrosion resistant coating and that the water casing is made up of corrosion resistant material.

(h) Verify that the electrolytic protection is installed.

(i) Verify that a blow-down pump is installed for periodic blow-down to remove solids from the water casing.

(j) Verify that the operation of this pump is automatic based on compressor run time or the conductivity of the water in the casing.

(k) Verify that the water casing is sloped downward towards the blow-down pump location to facilitate removal of solids.

(l) Drift eliminators must be installed to reduce the loss of water to less than 0.002% of the recirculated water (as per test method CTI-HBIK Std.140 or other approved procedure).

(m) Condensate water must be routed to the evaporative condenser sump, unless it is not practical i.e. the fan coil and condenser not separated by conditioned space.

(n) Condenser must have a certification from the manufacturer that water consumption is less than .15 gph per ton of capacity

(o) Water connection is made with tubing no large than ¼ inch diameter

(p) Overflow from the unit is not connected directly to the sewer drain (son in the event of a water float failure an overflow condition can be more easily detected) or another means of determining an overflows condition is provided.

(q) The system has a backup solenoid water shutoff control or no spill sump.

RA4.3.3 Evaporative Cooling

Qualifying equipment is limited to either indirect-direct or indirect evaporative coolers. Direct evaporative coolers and indirect or indirect-direct evaporative coolers that do not meet the following eligibility criteria shall not be used.

RA4.3.3.1 ***Eligibility Testing***

The installing contractor shall complete the following eligibility testing and document the results on the applicable Certificate of Installation.

(a) Eligible equipment shall be listed under Title 20 Appliance Standards.

(b) The equipment manufacturer shall certify to the Commission that water use does not exceed 7.5 gallons per ton hour based on the Title 20 Appliance Standards testing criteria.

(c) Equipment shall be permanently installed (no window or portable units).

(d) Installation shall provide for automatic relief of supply air from the house with maximum air velocity through the relief dampers not exceeding 800 fpm (at the Title 20 rated airflow). Pressure relief dampers and ductwork shall be distributed to provide adequate airflow through all habitable rooms. For installations with an attic, ceiling dampers shall be installed to relieve air into the attic, and then to outside through attic vents. For installations without an attic, sidewall relief dampers are acceptable.

(e) To minimize water consumption, bleed systems shall not be allowed.

(f) A water quality management system (either “pump out” or conductivity sensor) is required. “Pump out” systems can either be integral to the evaporative cooler or they can be accessories that operate on a timed interval. The time interval between dumps shall be set to a minimum of six hours of cooler operation. Longer intervals are encouraged if local water quality allows.

RA4.4 ***Water Heating Measures***

RA4.4.1 Proper Installation of Pipe Insulation

Unless otherwise stated, insulation must meet the requirements specified in §150.0(j). Pipe insulation shall fit tightly to the pipe and all elbows and tees shall be fully insulated. No piping should be visible due to insulation voids with the exception of the last segment of piping that penetrates walls and delivers hot water to the sink, appliance, etc. Mandatory measures include:

(a) The first five feet of hot and cold water piping from storage gas water heaters§150.0(j),

(b) All hot water piping of 3/4" diameter or greater shall be insulated as specified in §150.0(j).

(c) All piping from the water heater to kitchen sinks and dishwasher

(d) All underground hot water piping,

1. In addition, all piping below grade must be installed in a waterproof and non-crushable casing or sleeve that allows for installation, removal and replacement of the enclosed pipe and insulation. The internal cross-section or diameter of the casing or sleeve shall be large enough to allow for insulation of the hot water piping. Piping below grade that serves any island sinks or other island fixtures or appliances may be insulated with 1/2 inch wall thickness insulation.

(e) Pipe insulation may be omitted where hot water distribution piping is buried within attic, crawlspace or wall insulation, as described below: In attics and crawlspaces the insulation shall completely surround the pipe with at least 1 inch of insulation and the pipe shall be completely covered with at least 4 inches

of insulation further away from the conditioned space. In walls, the insulation must completely surround the pipe with at least 1 inch of insulation. If burial within the insulation does not meet these specifications, then this exception does not apply, and the section of pipe not meeting the specifications must be insulated as specified in §150.0(j).

RA4.4.2 The Standard Distribution System (STD)

The Standard Distribution System design requires that hot water distribution piping meets the requirements of Proper Installation of Pipe Insulation R4.4.1.

RA4.4.3 Pipe Insulation Credit (PIC)

All piping in the hot water distribution system must be insulated from the water heater to each fixture or appliance. Insulation shall be installed in accordance with the provisions of Proper Installation of Pipe Insulation R4.4.1.

RA4.4.4 Central Parallel Piping (PP)

This hot water distribution system is comprised of one or more manifolds located relatively close to the water heater and pipes running from the manifold to individual fixtures and appliances. The manifolds may have valves for each pipe running from the manifold to individual fixtures and appliances. These valves must be readily accessible in accordance with the plumbing code. The measured length of pipe from the water heater each central manifold shall not exceed 15 feet (measured to the nearest half foot).

The hot water distribution system piping from the manifold to the fixtures and appliances must take the most direct path. For example, in a house with more than 1-story and the water heater in the garage, this requirement would exclude running hot water supply piping from the manifold to the attic, and then running the line back down to a first floor point of use

The hot water distribution piping must be separated by at least two inches from any other hot water supply piping, and at least six inches from any cold water supply piping or the hot water supply piping must be insulated based on the conductivity range in TABLE 120.3-A and the insulation level shall be selected from the fluid temperature range based on the thickness requirements in TABLE 120.3-A.

Other hot water piping shall be insulated to a level that meets the requirements of §150.0(j) and be installed in accordance with Proper Installation of Pipe Insulation R4.4.1.

RA4.4.5 Reserved for future use

RA4.4.6 Reserved for future use

RA4.4.7 Recirculation Systems

RA4.4.7.1 *Installation requirements for all recirculation systems*

The supply portion of each circulation loop, the first five feet of branches off the loop and the dedicated return line are insulated based on the conductivity range in TABLE 120.3-A and the insulation level shall be selected from the fluid temperature range based on the thickness requirements in TABLE 120.3-A and the insulation shall be installed in accordance with Proper Installation of Pipe Insulation. Other hot water piping shall meet the requirements of §150.0(j) and be installed in accordance with Proper Installation of Pipe Insulation R4.4.1.

A check valve shall be installed in the recirculation loop to prevent unintentional circulation of the water (thermo-siphoning) and back flow when the system is not operating. This check valve may be included with the pump.

The hot water distribution system piping from the water heater(s) to the fixtures and appliances must take the most direct path. For example, in a house with more than 1-story and the water heater in the garage, this

requirement would exclude running hot water supply piping from the water heater to the attic, and then running the line back down to a first floor point of use.

The manufacturer(s) of the recirculation pump and the controls shall provide installation and operation instructions that provide details of the operation of the pump and controls and such instructions shall be available at the jobsite for inspection.

RA4.4.8 Recirculation with non-demand controls (R-ND)

All recirculation controls with the exception of demand recirculation control systems fall under this category.

(a) More than one circulation loop may be installed. Each loop shall have its own pump and controls.

(b) The active control shall be either: timer, temperature, or time and temperature. Timers shall be set to less than 24 hours. The temperature sensor shall be connected to the piping and to the controls for the pump.

RA4.4.9 Demand Recirculation; Manual Control (R-DRmc)

Demand controlled recirculation systems shall operate “on-demand”, meaning that pump operation shall be initiated shortly prior to the hot water draw. The controls shall operate on the principal of shutting off the pump with a sensed rise in pipe temperature (Delta-T). For this measure a manual switch is used to activate the pump.

(a) More than one circulation loop may be installed. Each loop shall have its own pump and controls.

(b) Manual controls shall be located in the kitchen, bathrooms, and any hot water use location that is at least 20 feet (measured along the hot water piping) from the water heater.

(c) Manual controlled systems may be activated by wired or wireless mechanisms, Manual controls shall have standby power of 1 watt or less.

(d) Pump and demand control placement meets one of the following criteria.

1. When a dedicated return line has been installed the pump, demand controls and thermo-sensor are installed at the end of the supply portion of the recirculation loop (typically under a sink); or

2. The pump and demand controls are installed on the return line near the water heater and the thermo-sensor is installed in an accessible location as close to the end of the supply portion of the recirculation loop as possible (typically under a sink), or

3. When the cold water line is used as the return, the pump, demand controls and thermo-sensor is installed in an accessible location at the end of supply portion of the hot water distribution line (typically under a sink).

(e) Insulation is not required on the cold water line when it is used as the return.

(f) Demand controls shall be able to shut off the pump in accordance with these three methods:

1. After the pump has been activated, the controls shall allow the pump to operate until the water temperature at the thermo-sensor rises not more than 10ºF (5.6 ºC) above the initial temperature of the water in the pipe, or
2. The controls shall not allow the pump to operate when the temperature in the pipe exceeds 102ºF (38.9 ºC).
3. The controls shall limit pump operation to a maximum of 5 minutes following any activation. This is provided in the event that the normal means of shutting off the pump have failed.

RA4.4.10 Demand Recirculation; Sensor Control (RDRsc)

Demand controlled recirculation systems shall operate “on-demand”, meaning that pump operation shall be initiated shortly prior to the hot water draw. The controls shall operate on the principal of shutting off the pump

with a sensed rise in pipe temperature (Delta-T). For this measure a sensor control is used to activate the pump rather than a manual control.

(a) More than one circulation loop may be installed. Each loop shall have its own pump and controls.

(b) Sensor controls shall be located in the kitchen, bathrooms, and any hot water use location that is at least 20 feet (measured along the hot water piping) from the water heater.

(c) Sensor controlled systems may be activated by wired or wireless mechanisms, including motion sensors, door switches and flow switches. Sensors controls shall have standby power of 1 watt or less.

(d) Pump and demand control placement meets one of the following criteria.

1. When a dedicated return line has been installed the pump, demand controls and thermo-sensor are installed at the end of the supply portion of the recirculation loop (typically under a sink); or
2. The pump and demand controls are installed on the return line near the water heater and the thermo-sensor is installed in an accessible location as close to the end of the supply portion of the recirculation loop as possible (typically under a sink), or
3. When the cold water line is used as the return, the pump, demand controls and thermo-sensor is installed in an accessible location at the end of supply portion of the hot water distribution line (typically under a sink).

(e) Insulation is not required on the cold water line when it is used as the return.

(f) Demand controls shall be able to shut off the pump in accordance with these three methods:

1. After the pump has been activated, the controls shall allow the pump to operate until the water temperature at the thermo-sensor rises not more than 10ºF (5.6 ºC) above the initial temperature of the water in the pipe, or
2. The controls shall not allow the pump to operate when the temperature in the pipe exceeds 102ºF (38.9 ºC).
3. The controls shall limit pump operation to a maximum of 5 minutes following any activation. This is provided in the event that the normal means of shutting off the pump have failed.

RA4.4.11 Multiple Dwelling Units: Recirculation Temperature Modulation Control

A recirculation temperature modulation control shall reduce the hot water supply temperature when hot water demand is determined to be low by the control system. The control system may use a fixed control schedule or dynamic control schedules based measurements of hot water demand. The daily hot water supply temperature reduction, which is defined as the sum of temperature reduction by the control in each hour within a 24-hour period, shall be more than 50 degrees Fahrenheit to qualify for the energy savings credit. Qualifying equipment shall be listed with the Commission.

Recirculation systems shall also meet the requirements of §110.3.

RA4.4.12 Multiple Dwelling Units: Recirculation Continuous Monitoring Systems

Systems that qualify as a recirculation continuous monitoring systems for domestic hot water systems serving multiple dwelling units shall record no less frequently than hourly measurements of key system operation parameters, including hot water supply temperatures, hot water return temperatures, and status of gas valve relays of water heating equipment. The continuous monitoring system shall automatically alert building operators of abnormalities identified from monitoring results. Qualifying equipment or services shall be listed with the Commission.

Recirculation systems shall also meet the requirements of §110.3.

RA4.4.13 Multiple Dwelling Units: Demand Recirculation

Demand controlled recirculation systems shall operate “on-demand”, meaning that pump operation shall be initiated shortly prior to, or by a hot water draw. The controls shall operate on the principal of shutting off the

pump with a sensed rise in pipe temperature (Delta-T). For this measure sensor or manual controls may be used to activate the pump(s).

(a) Manual or sensor shall be installed and if powered, have standby power of 1 watt or less. Controls may be located in individual units or on the loop. Controls may be activated by wired or wireless mechanisms, including buttons, motion sensors, door switches and flow switches.

(b) Pump and control placement shall meet one of the following criteria:

1. When a dedicated return line has been installed the pump, controls and thermo-sensor are installed at the end of the supply portion of the recirculation loop; or

2. The pump and controls are installed on the dedicated return line near the water heater and the thermo-sensor is installed in an accessible location as close to the end of the supply portion of the recirculation loop as possible, or

3. When the cold water line is used as the return, the pump, demand controls and thermosensor shall be installed in an accessible location at the end of supply portion of the hot water distribution line (typically under a sink).

(c) Insulation is not required on the cold water line when it is used as the return.

(d) Demand controls shall be able to shut off the pump in accordance with these three methods:

1. After the pump has been activated, the controls shall allow the pump to operate until the water temperature at the thermo-sensor rises not more than 10ºF (5.6 ºC) above the initial temperature of the water in the pipe, or
2. The controls shall not allow the pump to operate when the temperature in the pipe exceeds 102ºF (38.9 ºC).
3. The controls shall limit pump operation to a maximum of 10 minutes following any activation. This is provided in the event that the normal means of shutting off the pump have failed.

Recirculation systems shall also meet the requirements of §110.3.

RA4.4.14 HERS-Verified Pipe Insulation Credit (PIC-H)

Consistent with the requirements of RA4.4.3, this measure requires a HERS inspection to verify that all hot water piping in non-recirculating systems is insulated correctly.

RA4.4.15 HERS-Verified Parallel Piping (PP-H)

Consistent with the requirements of RA4.4.4 this measure requires a HERS inspection to verify that the length of pipe between the water heater and each central manifold does not exceed 5 feet and to verify pipe insulation.

RA4.4.16 HERS-Verified Compact Hot Water Distribution System (CHWDS-H)

A HERS inspection is required in order to obtain this credit. To meet the Compact HWDS requirement, the longest measured pipe run length between a hot water use point and the water heater serving that use shall be no more than the distance specified in Table 4.4.5. This table specifies the maximum pipe length as a function of Floor Area Served, where Floor Area Served is defined as the conditioned floor area divided by the number of installed water heaters.

TABLE 4.4.5

Floor Area Served (ft2)	Maximum Measured Water Heater To Use Point Distance (ft)
< 1000	28’
1001 – 1600	43’
1601 – 2200	53’
2201 – 2800	62’
>2800	68’

Requirements include that:

(a) The floor area (ft2) of the building matches the conditioned floor area that was used in compliance documentation. (Note: Floor Areas Served equals the conditioned floor area divided by the number of installed water heaters).

(b) The length from the water heater to the furthest use point it serves shall be equal to or less than listed in Table 4.4.5. Measurements shall be made to the nearest half foot.

(c) The hot water distribution system piping from the water heater(s) to the fixtures and appliances must take the most direct path. For example, in a house with more than 1-story and the water heater in the garage, this requirement would exclude running hot water supply piping from the manifold to the attic, and then running the line back down to a first floor point of use.

(d) Hot water piping shall be insulated to a level that meets the requirements of §150.0(j) and be installed in accordance with Proper Installation of Pipe Insulation R4.4.1.

RA4.4.17 HERS-Verified Point of Use (POU-H)

A HERS inspection is required in order to obtain this credit. This measure requires that all hot water fixtures in the dwelling unit, with the exception of a stand-alone tub must use no more pipe per run than defined in Table 4.4.6. To meet this requirement most houses will require multiple water heaters.

Table 4.4.17

Size Nominal, Inch	Length of Pipe (feet)
3/8”	15
1/2”	10
3/4”	5

(a) Measurements shall be made to the nearest half foot.

(b) If a combination of piping is used in a single run then one half the allowed length of each size is the maximum installed length.

(c) The hot water distribution system piping from the water heater(s) to the fixtures and appliances must take the most direct path. For example, in a house with more than 1-story and the water heater in the garage, this requirement would exclude running hot water supply piping from the manifold to the attic, and then running the line back down to a first floor point of use.

(d) Hot water piping shall be insulated to a level that meets the requirements of §150.0(j) and be installed in accordance with Proper Installation of Pipe Insulation R4.4.1.

RA4.4.18 HERS-Verified Demand Recirculation: Manual Control (RDRmc-H)

Consistent with the requirement of RA4.4.7.3, this measure includes a visual HERS inspection to verify that the demand pump, manual controls and thermo-sensor are present and operating properly

RA4.4.19 HERS-Verified Demand Recirculation: Sensor Control (RDRsc-H)

Consistent with the requirement of RA4.4.6.4 this measure includes a visual HERS inspection to verify that the demand pump, sensor controls and thermo-sensor are present and operating properly.

RA4.4.20 HERS-Verified Multiple Recirculation Loops for DHW Systems Serving Multiple Dwelling Units

Central DHW systems serving a building with more than eight dwelling units shall have at least two recirculation loops, each serving roughly the same number of dwelling units. Unique building sections may have additional recirculation loops. These recirculation loops may be connected to the same water heating equipment or be connected to independent water heating equipment. This credit may be taken in combination with recirculation system defined in RA 4.4.7.5 through RA 4.4.7.7.

RA4.4.21 Solar Water Heating Systems

Solar water-heating systems and/or collectors shall be certified and rated by the Solar Rating and Certification Corporation (SRCC) or by a testing agency approved by the Executive Director.

To use collectors with the SRCC OG-100 certification and rating, the installed system shall meet the following eligibility criteria:

(a) Include all of the features modeled and generated in the Commission approved solar savings fraction calculation.

(b) The collectors shall be installed according to manufacturer's instructions.

(c) The collectors shall be located in a position that is not shaded by adjacent buildings or trees between 9:00 AM and 3:00 PM (solar time) on December 21.

To use a solar water-heating system with the SRCC OG-300 certification and rating, the installed system shall meet the following eligibility criteria:

(a) The collectors shall face within 35 degrees of south and be tilted at a slope of at least 3:12

(b) The system shall be installed in the exact configuration for which it was rated. The system shall have the same collectors, pumps, controls, storage tank and backup water heater fuel type as the rated condition.

(c) The system shall be installed according to manufacturer's instructions.

(d) The collectors shall be located in a position that is not shaded by adjacent buildings or trees between 9:00 AM and 3:00 PM (solar time) on December 21.

RA4.5 *Other Measures*

RA4.5.1 Controlled Ventilation Crawlspace (CVC)

Drainage. Proper enforcement of site engineering and drainage, and emphasis on the importance of proper landscaping techniques in maintaining adequate site drainage, is critical.

Ground Water And Soils. Local ground water tables at maximum winter recharge elevation should be below the lowest excavated site foundation elevations. Sites that are well drained and that do not have surface water problems are generally good candidates for this stem-wall insulation strategy. However, the eligibility of this alternative insulating technique is entirely at the enforcement agency officials' discretion. Where disagreements exist, it is incumbent upon the applicant to provide sufficient proof that site drainage strategies (e.g., perimeter drainage techniques) will prevent potential problems.

Ventilation. All crawl space vents must have automatic vent dampers to receive this credit. Automatic vent dampers must be shown on the building plans and installed. The dampers should be temperature actuated to be fully closed at approximately 40°F and fully open at approximately 70°F. Cross ventilation consisting of the required vent area reasonably distributed between opposing foundation walls is required.

Foam Plastic Insulating Materials. Foam plastic insulating materials must be shown on the plans and installed when complying with the following requirements:

Fire Safety—CBC Section 719. Products shall be protected as specified. Certain products have been approved for exposed use in under floor areas by testing and/or listing.

Direct Earth Contact—Foam plastic insulation used for crawl-space insulation having direct earth contact shall be a closed cell water resistant material and meet the slab-edge insulation requirements for water absorption and water vapor transmission rate specified in the mandatory measures.

Vapor Retarder: A Class I or Class II vapor retarder shall be placed over the earth floor of the crawl space to reduce moisture entry and protect insulation from condensation, as specified in the exception to Section 150.0(d).

RA4.5.2 Sunspace

The installation of a sunspace can be a very beneficial energy features in many parts of California. However, if orientation fenestration area or fenestration performance values are installed that to not match compliance documentation then the performance of a sunroom can have significant negative energy impacts. Another critical components of sunroom is ventilation. Sunrooms must have the ability to vent to the outside and to provide airflow to the rest of the house. If any of these components are not present in the actual installation the performance documentation should be reviewed carefully.

RA4.5.3 Multiple Orientations Compliance

When all orientations are used to document compliance as allowed under Section 150.1(c)4 EXCEPTION, the following guidelines shall be meet. Compliance for multi-family or subdivisions that is based upon multiple orientation the annual energy consumption for each specific design (including the reverse images of that design) must be calculated in each of the four cardinal orientations: true north, true east, true south and true west. With this option, a dwelling unit plan must be modeled using the identical combination of energy features and levels in each orientation, and must comply with the energy budget in each case. All of the orientation must either use the reversed plan or the original/standard to demonstrate compliance.

If the dwelling unit have unique designs or energy features the dwelling unit plan must be modeled using the worst-case condition for the energy features that the plan may contain (e.g. highest glazing percentage, least overhangs, largest wall surface area, and with exterior walls instead of party walls if applicable). See Reference Residential Appendix RA 2.6.1 for information that describes how to determine when a dwelling is considered to be a unique model. Each unique dwelling plan must also be modeled separately for each unique floor level. The option of modeling each individual dwelling unit, with its unique characteristics separately according to its actual orientation is always an acceptable alternative.

RA4.6 *Solar Electric Systems*

RA4.6.1 Photovoltaic Systems

When photovoltaic (PV) system performance is used in the performance compliance approach as specified in the Residential ACM Reference Manual, the PV system shall meet the eligibility criteria in (a) or (b).

(a) PV systems meeting all requirements of the NSHP Guidebook; or,

(b) PV systems meeting all of the following requirements:

1. The PV modules and inverter(s) meet the equipment eligibility requirements in the NSHP Guidebook.
2. The PV system nameplate DC power rating, measured under Standard Test Conditions, is no less than 2000 watts.
3. The PV array is installed at a slope no greater than 2.4 degrees from the horizontal (ratio of rise to run no greater than 0.5:12); or, the PV array is installed at a slope no greater than 30.3 degrees from the horizontal (ratio of rise to run no greater than 7:12) and with an orientation between 110 degrees and 270 degrees of true north.
4. The PV system is equipped with a system energy production meter that is integral to the inverter, a standalone system energy production meter, or an energy production monitoring system.
5. Any obstruction that projects above a PV array shall be located at least twice the distance, measured in the horizontal plane, of the height difference between the highest point of the obstruction and the horizontal projection of the nearest point of the PV array, measured in the vertical plane.
6. Prior to occupancy of the building, the building inspector shall confirm that PV system is operational.

(This page left intentionally blank)

RA4.5.2 Sunspace

The installation of a sunspace can be a very beneficial energy features in many parts of California. However, if orientation fenestration area or fenestration performance values are installed that to not match compliance documentation then the performance of a sunroom can have significant negative energy impacts. Another critical components of sunroom is ventilation. Sunrooms must have the ability to vent to the outside and to provide airflow to the rest of the house. If any of these components are not present in the actual installation the performance documentation should be reviewed carefully.

RA4.5.3 Multiple Orientations Compliance

When all orientations are used to document compliance as allowed under Section 150.1(c)4 EXCEPTION, the following guidelines shall be meet. Compliance for multi-family or subdivisions that is based upon multiple orientation the annual energy consumption for each specific design (including the reverse images of that design) must be calculated in each of the four cardinal orientations: true north, true east, true south and true west. With this option, a dwelling unit plan must be modeled using the identical combination of energy features and levels in each orientation, and must comply with the energy budget in each case. All of the orientation must either use the reversed plan or the original/standard to demonstrate compliance.

If the dwelling unit have unique designs or energy features the dwelling unit plan must be modeled using the worst-case condition for the energy features that the plan may contain (e.g. highest glazing percentage, least overhangs, largest wall surface area, and with exterior walls instead of party walls if applicable). See Reference Residential Appendix RA 2.6.1 for information that describes how to determine when a dwelling is considered to be a unique model. Each unique dwelling plan must also be modeled separately for each unique floor level. The option of modeling each individual dwelling unit, with its unique characteristics separately according to its actual orientation is always an acceptable alternative.

RA4.6 *Solar Electric Systems*

RA4.6.1 Photovoltaic Systems

When photovoltaic (PV) system performance is used in the performance compliance approach as specified in the Residential ACM Reference Manual, the PV system shall meet the eligibility criteria in (a) or (b).

(a) PV systems meeting all requirements of the NSHP Guidebook; or,

(b) PV systems meeting all of the following requirements:

1. The PV modules and inverter(s) meet the equipment eligibility requirements in the NSHP Guidebook.
2. The PV system nameplate DC power rating, measured under Standard Test Conditions, is no less than 2000 watts.
3. The PV array is installed at a slope no greater than 2.4 degrees from the horizontal (ratio of rise to run no greater than 0.5:12); or, the PV array is installed at a slope no greater than 30.3 degrees from the horizontal (ratio of rise to run no greater than 7:12) and with an orientation between 110 degrees and 270 degrees of true north.
4. The PV system is equipped with a system energy production meter that is integral to the inverter, a standalone system energy production meter, or an energy production monitoring system.
5. Any obstruction that projects above a PV array shall be located at least twice the distance, measured in the horizontal plane, of the height difference between the highest point of the obstruction and the horizontal projection of the nearest point of the PV array, measured in the vertical plane.

6. Prior to occupancy of the building, the building inspector shall confirm that PV system is operational.

(This page left intentionally blank)

NONRESIDENTIAL APPENDICES

Nonresidential Appendix NA1

Appendix NA1 – Nonresidential HERS Verification, Testing, and Documentation Procedures

Appendix NA1 – Nonresidential HERS Verification, Testing, and Documentation Procedures 2

NA1.1 Purpose and Scope 2

NA1.2 Documentation and Communication Requirements for HERS Verification Compliance 4

NA1.3 Summary of Responsibilities 6

NA1.4 Installer Procedures –Certificate of Installation Documentation 8

NA1.5 Acceptance Procedures - Certificate of Acceptance Documentation 9

NA1.6 HERS Rater Procedures – Verification, Testing, and Sampling 9

NA1.7 Third Party Quality Control Programs 12

NA1.8 Installer Requirements and HERS Procedures for Alterations ……13

NA1.1 Purpose and Scope

Appendix NA1 provides direction for communication and documentation processes that must be completed for compliance with the requirements for duct sealing of HVAC systems covered by §140.4(l), §141.0(b)2D, and §141.0(b)2E that requires field verification and diagnostic testing of as-constructed duct systems by a certified Home Energy Rating System (HERS) Rater, using the testing procedures in Reference Nonresidential Appendix NA2. The Commission approves HERS Providers, subject to the Commission's HERS Program regulations, which appear in the California Code of Regulations, Title 20, Chapter 4, Article 8, Sections 1670-1675. Approved HERS Providers are authorized to certify HERS Raters and maintain quality control over field verification and diagnostic testing.

When the Certificate of Compliance indicates that field verification and diagnostic testing of specific energy efficiency measures are required as a condition for compliance with Title 24, Part 6, an approved HERS Provider and certified HERS Rater shall be used to conduct the field verification and diagnostic testing according to the applicable procedures in Reference Nonresidential Appendix NA2. HERS Providers and HERS Raters shall be considered special inspectors by enforcement agencies, and shall demonstrate competence to the satisfaction of the enforcement agency, for field verifications and diagnostic testing. Per California Code of Regulations, Title 20, Division 2, Chapter 4, Article 8, Section 1673(j)(2),HERS Providers and HERS Raters shall be independent entities from the builder or subcontractor installer of the energy efficiency improvements being field verified or diagnostically tested. An "Independent Entity means having no financial interest in, and not advocating or recommending the use of any product or service as a means of gaining increased business with, firms or persons specified in CCR Title 20, Division 2, Chapter 4, Article 8, Sections 1671 and 1673(j).". Third Party Quality Control Programs approved by the Commission may serve some of the functions of HERS Raters for field verification and diagnostic testing purposes as specified in NA1.7.

The remainder of Reference Nonresidential Appendix NA1 describes the:

(a) Requirements for documentation and communication for HERS verification compliance processes;

(b) Responsibilities assigned to each of the parties involved in the field verification and diagnostic testing process;

(c) Requirements for procedures for installing contractors and Certificate of Installation documentation;

(d) Requirements for HERS Rater field verification and diagnostic testing and documentation procedures;

(e) Requirements for sampling procedures for HERS verification compliance;

(f) Requirements for Third Party Quality Control Programs;

(g) Requirements for HERS verification compliance for alterations to existing buildings.

NA1.2 Documentation and Communication Requirements for HERS Verification Compliance

The required building energy compliance features and the required field verification and diagnostic testing procedures shall be identified on a Certificate of Compliance completed in accordance with the requirements in Standards Sections 10-103(a)1 and 10-103(a)2. The builder or subcontractor shall complete all applicable Certificate of Installation documentation in accordance with the requirements in Standards Section 10-103(a)3 and the procedures described in NA1, and shall provide certification that the construction or installation complies with the applicable requirements on the Certificate of Compliance. The person responsible for the acceptance testing shall perform the required field verification and diagnostic testing and report the results on the Certificate of Acceptance documentation submitted in accordance with the requirements in Standards Section 10-103(a)4 and the procedures described in NA1, and shall provide certification that the construction or installation information reported on the Certificates of Installation are consistent with applicable requirements on the Certificate of Compliance. A certified HERS Rater shall perform all applicable HERS field verification and diagnostic testing and report the results on the applicable Certificate of Verification documentation submitted in accordance with the requirements of Standards Section 10-103(a)5 and the procedures in NA1, and shall provide certification that the construction or installation information reported on the Certificates of Installation, and the results of the Acceptance testing reported on the Certificate of Acceptance is consistent with applicable requirements on the Certificate of Compliance.

NA1.2.1 Compliance Document Registration and Verification

Document registration requirements are introduced in Section NA1.2.1.1 and further described in the procedures in subsequent sections of NA1. Verification of electronic documentation is introduced in Section NA1.2.1.2 and is applicable to many aspects of the documentation procedures described in subsequent sections of Nonresidential Appendix NA1.

NA1.2.1.1 Document Registration Terminology and Effective Dates for Registration Requirements

When submittal of documentation to a Data Registry is required by applicable sections of Standards Section 10-103(a), the completed documents are referred to as registered documents, and the process of completing these documents by submitting information and certification signatures to the Data Registry is called registration. Refer to Reference Joint Appendix JA1 for additional terminology for Data Registries, registered documents and registration Providers. Additional specification for the document registration process is given in Reference Joint Appendix JA7.

Data Registry is a web service with a user interface and database maintained by a Registration Provider that complies with the applicable requirements in Reference Joint Appendix JA7, with guidance from the Data Registry Requirements Manual, and provides for registration of residential or nonresidential compliance documentation used for demonstrating compliance with Part 6.

Residential Data Registry is a Data Registry that is maintained by a HERS Provider that provides for registration, when required by Part 6, of all residential compliance documentation and the nonresidential Certificate of Verification.

Nonresidential Data Registry is a Data Registry that is maintained by a Registration Provider approved by the Commission that provides for registration, when required by Part 6, of all nonresidential compliance documentation. However, nonresidential Data Registries may not provide for registration of nonresidential Certificates of Verification.

Registration Provider is an organization that administers a Data Registry service that conforms to the requirements in Reference Joint Appendix JA7 and may conform to the guidance given in the Data Registry Requirements Manual.

NA1.2.1.1.1 Document registration requirements prior to January 1, 2015.

For all nonresidential buildings, high-rise residential buildings, and hotels and motels, when designated to allow use of an occupancy group or type regulated by Part 6:

(a) All Certificate of Verification compliance documents for duct leakage testing are required to be submitted for registration and retention to an approved Residential Data Registry, and

(b) Certificate of Compliance, Certificate of Installation, and Certificate of Acceptance compliance documents are not required to be registered.

NA1.2.1.1.2 Document registration requirements effective on January 1, 2015,

Contingent upon the approval of Nonresidential Data Registry(s) by the Commission, for all nonresidential buildings, high-rise residential buildings, and hotels and motels, when designated to allow use of an occupancy group or type regulated by Part 6:

(a) All Certificate of Compliance, Certificate of Installation, and Certificate of Acceptance documentation shall be submitted for registration and retention to an approved Nonresidential Data Registry.

(b) All Certificate of Verification documents for duct leakage testing are required to be submitted for registration and retention to an approved Residential Data Registry.

All submittals to the Data Registries shall be made electronically in accordance with the specifications in Reference Joint Appendix JA7.

NA1.2.1.2 Verification of Registered Documents

When document registration is required, printed paper copies or electronic copies of the applicable completed, signed, registered compliance documentation shall be allowed for use for required submittals to enforcement agencies, subject to verification that the information shown on the submitted document(s) conforms to the information shown on the current revision of the registered document(s) on file in the Data Registry for the building.

The document registration Provider shall make document verification services available via phone, internet, or utilization of digital technologies, to enable enforcement agency officials, builders, installation contractors, HERS Raters, and other authorized users of the Data Registry to verify that the information shown on submitted documentation is consistent with the information shown on the current revision of the registered document on file in the Data Registry for the applicable building.

NA1.2.2 Summary of Documentation and Communication Procedures

The documentation and communication process for duct sealing field verification and diagnostic testing is summarized below. The subsequent sections of this chapter contain additional information and requirements that apply to all situations; however the section on alterations, NA1.8, applies specifically to the differences in the requirements for alterations. NA1.7 applies specifically to the differences in the requirements for Third Party Quality Control Programs.

(a) The documentation author and the principal mechanical designer shall complete the compliance documents for the building.

(b) The documentation author or the principal mechanical designer shall provide a signed Certificate of Compliance to the builder that indicates duct sealing with HERS Rater diagnostic testing and field verification is required for compliance.

(c) The builder or principal mechanical designer shall make arrangements for transmittal of a signed copy of the Certificate of Compliance, for units that require HERS verification, to a HERS Provider. The builder shall also arrange for the services of a certified HERS Rater prior to installation of the duct system, so that once the installation is complete the HERS Rater has ample time to complete the field verification and diagnostic testing without delaying final approval of occupancy by the enforcement agency. The builder or principal mechanical designer shall make available to the HERS Rater a copy of the Certificate of Compliance that was approved/signed by the principal designer/owner and submitted to the enforcement agency.

(d) The builder or subcontractor shall install the duct system(s) that requires field verification and diagnostic testing. The builder or the installing subcontractor shall perform diagnostic testing according to the procedures specified in Reference Nonresidential Appendix NA1.4 and NA2.

(e) When the installation is complete, the builder or the installing subcontractor shall complete and sign the Certificate of Installation, and Certificate of Acceptance, and post a copy of the completed signed Certificates at the building site for review by the enforcement agency in conjunction with requests for final inspection. The builder or subcontractor shall also provide a signed copy of the Certificate of Installation and Certificate of Acceptance to the HERS Rater.

(f) The HERS Rater shall confirm that the Certificate of Installation and Certificate of Acceptance has been completed as required, and that the installer's diagnostic test results and all other Certificate of Installation and Certificate of Acceptance information shows compliance consistent with the requirements given in the plans and specifications and Certificate of Compliance approved by the local enforcement agency for the building.

(g) The HERS Rater shall complete the field verification and diagnostic testing as specified in NA1.6 and shall enter the test results into the HERS Provider Data Registry.

(h) The HERS Provider shall make available copies of the Certificate of Verification to the HERS Rater, builder, and the HERS Rater shall arrange to have a copy of the completed signed Certificate of Verification posted at the building site for review by the enforcement agency in conjunction with requests for final inspection.

(i) The enforcement agency shall not approve a building with individual single zone package space conditioning equipment for occupancy until the enforcement agency has received a completed signed copy of the Certificate of Installation, Certificate of Acceptance, and the Certificate of Verification at the building site in conjunction with requests for final inspection.

(j) The Registration Providers shall make document verification services available, via phone or internet communications interface, to the enforcement agency, builders and contractors, HERS Raters, the Energy Commission, and other authorized users of the Data Registry. The HERS Provider shall ensure that the Certificate of Verification information and approval signatures are retained per Title 20 Section 1673(e).

NA1.3 Summary of Responsibilities

Section NA1.3 summarizes responsibilities set forth in Appendix NA1 and organizes them by the responsible party**.** This section is not, however, a complete accounting of the responsibilities of the respective parties.

NA1.3.1 Builder

The builder shall make arrangements for submittal of a copy of the Certificate of Compliance, for buildings with duct systems requiring HERS verification, to the HERS Provider. The builder shall make arrangements for the services of a certified HERS Rater prior to installation of the duct systems, so that once the installation is complete the HERS Rater has ample time to complete the field verification and diagnostic testing without delaying final approval of occupancy for the building permit by the enforcement agency. The builder shall make available to the HERS Rater a copy of the Certificate of Compliance that was approved/signed by the principal designer or owner and submitted to the enforcement agency.

The builder's employees or subcontractors responsible for the installation shall perform diagnostic testing, as specified in Reference Nonresidential Appendix NA1.4, NA1.5 and NA2, and shall complete and sign the Certificate of Installation and Certificate of Acceptance to certify the diagnostic testing results and that the installation work meets the requirements for compliance as shown on the Certificate of Compliance. The builder or subcontractor shall post a copy of the Certificate of Installation and Certificate of Acceptance at the construction site for review by the enforcement agency, in conjunction with requests for final inspection. The builder or subcontractor shall also make available a completed signed copy of the Certificate of Installation and Certificate of Acceptance to the HERS Rater.

If the builder chooses to utilize group sampling for HERS verification compliance, the builder, the builder's authorized representative, or the HERS Rater shall identify the units to be included in the sample group for field verification and diagnostic testing. The HERS Rater, with no direction from the installer or builder, shall randomly select one duct system from a sample group for field verification and diagnostic testing upon receiving the builder's or builder representative's request for HERS verification of that group. The builder or the HERS Rater shall arrange for registered copies of all Certificates of Verification to be posted at the building site for review by the enforcement agency in conjunction with requests for final inspection for each individual system.

The builder shall leave in the building, for the building owner at occupancy, copies of all compliance, operating, maintenance, and ventilation information specified in applicable sections of Title 24, Part 1, Section 10-103(b).

NA1.3.2 HERS Provider and Rater

The HERS Provider shall maintain a Data Registry with the capability to receive and store data information provided by authorized users of the Data Registry sufficient to facilitate administration the of HERS compliance verification procedures and documentation procedures as described in NA1, Reference Residential Appendix RA2, and Joint Appendix JA7. Data Registry capabilities include a secure web-based interface accessible by authorized users, and the ability to receive and process data transfer files as specified by Reference Joint Appendix JA7. The HERS Provider shall maintain a list of the space conditioning units in the group from which sampling is drawn, the units selected for sampling, the units sampled and the results of the sampling, the units selected for re-sampling, the units that have been tested and verified as a result of re-sampling, and the corrective action taken. The Provider shall retain records of all information content and approval signatures for completed registered Certificate of Verification forms for a period of five years per Title 20 Section 1673(d).

The HERS Rater providing the diagnostic testing and verification shall transmit the test results to the Data Registry. A registered copy of the Certificate of Verification from the Provider, signed by the Rater, shall be provided for the "tested" unit and each of the remaining "not tested" units from a designated sample group for which compliance is verified based on the results of a sample. The HERS Provider's registered copy of the Certificate of Verification shall be made available to the HERS Rater, the builder, the enforcement agency, and other authorized users of the Data Registry, and a copy of the completed signed Certificate of Verification shall be posted at the building site for review by the enforcement agency in conjunction with requests for final inspection.

The HERS Rater shall produce a separate Certificate of Verification for each system that meets the diagnostic requirements for compliance. The registered Certificate of Verification shall have unique HERS Provider-designated identifiers for registration number, and sample group number, and shall include the lot location, building permit number, time and date stamp of issuance of the certificate, Provider logo or seal, and indicate if the space conditioning unit has been "tested or if it was a "not tested" unit approved as part of sample group. The HERS Rater shall not provide a Certificate of Verification for a building with a space conditioning unit that does not have a completed signed Certificate of Installation as specified in Section NA1.4 and Certificate of Acceptance as specified in Section NA1.5.

If field verification and diagnostic testing on a sampled space conditioning unit identifies a failure to meet the requirements for compliance credit, the HERS Rater shall report to the HERS Provider, the builder, and the enforcement agency that re-sampling will be required.

If re-sampling identifies another failure, the HERS Rater shall report to the HERS Provider, the builder, and the enforcement agency that corrective action, diagnostic testing, and field verification will be required for all the untested space conditioning units in the group. The report shall identify each space conditioning unit that shall be fully tested and corrected.

The HERS Provider shall also report to the builder when diagnostic testing and field verification has shown that the failures have been corrected for all of the space conditioning units.

When individual space conditioning unit testing and verification confirms that the requirements for compliance have been met, the HERS Provider shall make available to the builder and the enforcement agency a registered copy of the Certificate of Verification for each space conditioning unit in the group.

The HERS Provider shall file a report with the enforcement agency if there has been a sample group failure, explaining all actions taken (including field verification, testing, and corrective actions) to bring into compliance space conditioning units for which full testing has been required.

NA1.3.3 Third-Party Quality Control Program

An approved third-party quality control program shall:

(a) Provide training to participating program installing contractors, installing technicians, and specialty third party quality control program subcontractors regarding compliance requirements for measures for which diagnostic testing and field verification are required,

(b) Collect data from participating installers for each installation completed for compliance credit,

(c) Complete data checking analysis to evaluate the validity and accuracy of the data to independently determine whether compliance has been achieved,

(d) Provide direction to the installer to retest and correct problems when data checking determines that compliance has not been achieved,

(e) Require resubmission of data when retesting and correction is directed, and

(f) Maintain a database of all data submitted by participating program installing contractors, installing technicians, and specialty Third Party Quality Control Program subcontractors, and shall provide functionality that allows Energy Commission staff to query retained data or documents.

The HERS Provider shall arrange for the services of an independent HERS Rater to conduct independent field verifications of the installation work performed by the participating installing contractor and the Third Party Quality Control Program, completing all of the responsibilities of a HERS Rater as specified in Appendix NA1 with the exception that sampling shall be completed for a group of up to 30 space conditioning systems.

NA1.3.4 Enforcement Agency

The enforcement agency, at its discretion, may require independent testing and field verification to be scheduled so that it can be completed in conjunction with the enforcement agency's required inspections. The enforcement agency may also require that it observe the diagnostic testing and field verification performed by builders or subcontractors and the certified HERS Rater in conjunction with the enforcement agency's required inspections to corroborate the results documented on the Certificate of Installation, Certificate of Acceptance, and the Certificate of Verification.

For space conditioning systems for which field verification and diagnostic testing is required for compliance, the enforcement agency shall not approve a building with individual single zone package space conditioning equipment for occupancy until the enforcement agency has received a completed Certificate of Installation and Certificate of Acceptance that has been signed by the builder/owner or installing subcontractor, and a completed registered copy of the Certificate of Verification that has been made available by the HERS Provider Data Registry. The Certificates shall be posted at the building site for review by the enforcement agency in conjunction with requests for final inspection.

NA1.4 Installer Procedures –Certificate of Installation Documentation

Certificates of Installation are required for all buildings and shall include the required compliance information for all of the installed space conditioning systems in the building that must comply. When compliance requires duct sealing, the builder's employees or subcontractors shall perform diagnostic testing according to the procedures specified in Reference Nonresidential Appendix NA2, and verify that the duct sealing work meets the requirements for compliance shown on the Certificate of Compliance. The owner or installer shall complete a Certificate of Installation and sign the certificate to certify that the installation work meets the requirements for compliance.

A signed copy of the Certificate of Installation shall be posted at the job site for review by the enforcement agency, in conjunction with requests for final inspection, and a copy shall be provided to the HERS Rater.

When the Standards do not require the Certificate of Installation to be registered, the Certificates of Installation that are posted in the field for review by the enforcement agency at final inspection are not required to be registered certificates from a Data Registry, but shall conform to all other applicable requirements of 10-103(a)3.

NA1.5 Acceptance Procedures - Certificate of Acceptance Documentation

Certificates of Acceptance for duct testing are required for all applicable single zone package space conditioning systems in the building. When compliance requires duct sealing, the acceptance test Field Technician shall perform the required field verification and diagnostic testing according to the procedures specified in Reference Nonresidential Appendix NA2, and verify that the work meets the requirements for compliance as shown on the Certificate of Compliance. The owner or installer shall complete a Certificate of Installation and sign the certificate to certify that the installation work meets the requirements for compliance credit.

A signed copy of the Certificate of Acceptance shall be posted at the job site for review by the enforcement agency, in conjunction with requests for final inspection, and a copy shall be provided to the HERS Rater.

When the Standards do not require the Certificate of Acceptance to be registered, the Certificates of Acceptance that are posted in the field for review by the enforcement agency at final inspection are not required to be registered certificates from a Data Registry, but shall conform to all other applicable requirements of 10-103(a)4.

NA1.6 HERS Rater Procedures – Verification, Testing, and Sampling

At the builder's or owner's option, HERS field verification and diagnostic testing shall be completed either for each single zone package space conditioning system in the building or for a sample from a designated group of systems. Field verification and diagnostic testing for compliance with duct sealing requirements shall use the diagnostic duct leakage from fan pressurization of ducts procedure in Reference Nonresidential Appendix NA2. If the builder or owner elects to demonstrate HERS verification compliance utilizing group sampling, the applicable procedures described in NA1.6.2, NA1.6.3 and NA1.6.4 shall be followed.

NA1.6.1 HERS Procedures - General Requirements

The general requirements in NA1.6.1 are applicable to all units that require HERS verification for compliance, and shall be incorporated into procedures specified in Sections NA1.6.2, NA1.6.3, and NA1.6.4 whenever applicable.

The builder or subcontractor shall make available to the HERS Rater a copy of the Certificate of Compliance approved/signed by the system designer/builder or owner, a copy of the Certificate of Installation as described in NA1.4, and a copy of the Certificate of Acceptance as described in NA1.5. Prior to performing field verification and diagnostic testing, the HERS Rater shall confirm that the Certificate of Installation and the Certificate of Acceptance have been completed as required, and that the installer's diagnostic test results and all other Certificate of Installation and Certificate of Acceptance information indicate compliance consistent with the Certificate of Compliance.

The HERS Rater shall perform all applicable field verification and diagnostic testing.

If field verification and diagnostic testing determines that the requirements for compliance are met, the HERS Rater shall submit or make arrangements for submittal of the Certificate of Verification information to the HERS Provider data registry.

Authorized users of the HERS Provider data registry that are not certified HERS Raters may provide *documentation author* support to facilitate submittal of the Certificate of Verification information to the HERS Provider data registry on behalf of the HERS Rater when such facilitation has been authorized by the HERS Rater. *Documentation authors* shall provide an electronic signature to the Data Registry to certify the documentation is accurate and complete.

The Certificate of Verification shall be electronically signed by the HERS Rater who performed the field verification and diagnostic testing services to certify that the information provided on the Certificate is true and correct.

A completed signed registered copy of the Certificate of Verification shall be posted at the building site for review by the enforcement agency in conjunction with requests for final inspection.

The HERS Provider shall make document verification services available, to enforcement agencies, builders and contractors, HERS Raters, the Energy Commission, and other authorized users of the HERS Provider data registry.

NA1.6.2 HERS Procedures - Initial Field Verification and Diagnostic Testing

The HERS Rater shall diagnostically test and field verify the first single zone package space conditioning equipment unit of each building when the builder elects to demonstrate HERS verification compliance utilizing group sampling. This initial testing allows the builder to identify and correct any potential duct installation and sealing flaws or practices before other units are installed. If field verification and diagnostic testing determines that the requirements for compliance are met, the HERS Rater shall transmit the test results to the HERS Provider registry, whereupon the Provider shall make available a copy of the registered Certificate of Verification to the HERS Rater, the builder, and the enforcement agency.

NA1.6.3 HERS Procedures -– Group Sample Field Verification and Diagnostic Testing

After the initial field verification and diagnostic testing is completed, the builder or the HERS Rater shall identify a group of up to seven individual single zone package space conditioning systems in the building from which a sample will be selected and identify the names and license numbers of the subcontractors responsible for the installations requiring field verification and diagnostic testing.

For newly constructed buildings, systems in a designated group shall all be located within the same enforcement agency jurisdiction. Refer to Section NA1.8 for requirements for sample groups applicable to alterations.

The HERS Rater shall verify that a Certificate of Compliance a Certificate of Installation, and a Certificate of Acceptance have been completed for each unit having features requiring HERS verification. The HERS Rater shall also confirm that the Certificate of Installation and Certificate of Acceptance have been completed as required, and that the field technician's diagnostic test results and all other Certificate of Acceptance information shows compliance consistent with the Certificate of Compliance. The group shall be closed prior to selection of the sample that will be field verified and diagnostically tested.

The builder or the HERS Rater may request removal of units from the group by notifying the HERS Provider prior to selection of the sample that will be tested and shall provide justification for the change. Removed units which are installed shall either be field verified and diagnostically tested individually or shall be included in a subsequent group for sampling.

At the request of the builder or the builder's authorized representative, the HERS Rater, with no direction from the installer, builder, or owner shall randomly select one unit out of the closed group for field verification and diagnostic testing. The HERS Rater shall enter the test and/or field verification results into the Data Registry regardless of whether the results indicate a pass or fail. If the test fails then the failure must be entered into the Provider's Data Registry even if the installer immediately corrects the problem. In addition, the procedures in NA1.6.4 shall be followed.

If field verification and diagnostic testing determines that the requirements for compliance are met, the HERS Rater shall enter the test results into the Data Registry. Whereupon, the Provider shall make available to the HERS Rater, the builder, the enforcement agency and other approved users of the Data Registry, a copy of the registered Certificate of Verification for the "tested" unit and a Certificate of Verification shall also be provided for each "not tested" conditioning unit in the sample group. The Certificate of Verification shall report the successful diagnostic testing results and conclusions regarding compliance for the "tested" conditioning unit. The Certificate of Verification shall also provide:

(a) Building permit number for the unit.

(b) Registration Number – that conforms to the numbering convention specified in Reference Joint Appendix JA7.

(c) Group Number – that conforms to the numbering convention specified in Reference Joint Appendix JA7.

(d) Time and date stamp of the Provider's issuance of the registered Certificate of Verification.

(e) Provider's logo, water mark, or official seal.

(f) Indication that the conditioning unit was a "tested" unit, or was a "not tested" unit from the sample group.

The registered Certificate of Verification shall not be provided for units that have not yet been installed and sealed.

Whenever the builder changes subcontractors who are responsible for installation of the space conditioning systems, the builder shall notify the HERS Rater of the subcontractor change, and terminate sampling for any affected group. All units requiring HERS Rater field verification and diagnostic testing for compliance that were installed by previous subcontractors or were subject to field verification and diagnostic testing under the supervision of a previous HERS Provider, for which the builder does not have a completed Certificate of Verification, shall either be individually tested or included in a separate group for sampling. Individual single zone package space conditioning systems that are subject to the requirements of Section 140.4(l) with installations completed by new subcontractors shall either be individually tested or shall be included in a new sampling group following a new *Initial Field Verification and Testing*, as described in Section NA1.6.2.

The HERS Rater shall not notify the builder when sample testing will occur prior to the completion of the work that is to be tested, or prior to entry of the data from the Certificate of Installation.

The HERS Provider shall close a group within 6 months after the signature date shown on any Certificate of Installation in the group. When such group closure occurs, the HERS Provider shall notify the builder or contractor and HERS Rater that the group has been closed, and a sample shall be selected for field verification and diagnostic testing.

NA1.6.4 HERS Procedures - Re-sampling, Full Testing and Corrective Action

“Re-sampling” refers to the procedure that requires testing of additional dwellings within a group when the selected sample dwelling from a group fails to comply with the HERS verification requirements.

When a failure is encountered during sample testing, the failure shall be entered into the Provider’s Data Registry. Corrective action shall be taken on the failed system and then retested to verify that corrective action was successful. Corrective action and retesting on the system shall be repeated until the testing indicates compliance and the results have been entered into the Data Registry, whereupon, a registered Certificate of Verification for the system shall made available to the HERS Rater, the builder, the enforcement agency, and other authorized users of the Data Registry.

In addition, the HERS Rater shall conduct re-sampling to assess whether the first failure in the group is unique or if the rest of the units in the group are likely to have similar failings. The HERS Rater shall randomly select for re-sampling one of the remaining untested units in the group for testing.

If testing in the re-sample confirms that the requirements for compliance credit are met, then the unit with the failure shall not be considered an indication of failure in the other units in the group. The HERS Rater shall transmit the re-sample test results to the Data Registry, whereupon the Provider shall make available to the HERS Rater, the builder, the enforcement agency, and other authorized users of the Data Registry, a copy of the registered Certificate of Verification for each of the remaining units in the group including the dwelling unit in the re-sample.

If field verification and diagnostic testing of the second sample results in a failure, the HERS Rater shall report the second failure to the HERS Provider, the builder, and the enforcement agency. All space conditioning systems in the group must thereafter be individually field verified and diagnostically tested. The builder shall take corrective action on any space conditioning systems in the group that failed to comply when tested. In cases where corrective action would require destruction of building components, and the performance compliance method is used, the builder may choose to reanalyze compliance and choose different measures that will achieve compliance. In this case a new Certificate of Compliance shall be completed and submitted to the HERS Provider, the HERS Rater and the enforcement agency. The HERS Rater shall conduct field verification and diagnostic testing for each of these space conditioning units to verify that problems have been corrected and that the requirements for compliance have been met. Upon verification of compliance, the HERS Rater shall enter the test results into the Data Registry. Whereupon the Provider shall make available to the HERS Rater, the builder, the enforcement agency, and other authorized users of the Data Registry a copy of the registered Certificate of Verification for each individual unit in the group.

The HERS Provider shall file a report with the enforcement agency explaining all action taken (including field verification, diagnostic testing, and corrective action,) to bring into compliance units for which full testing has been required. If corrective action requires work not specifically exempted by the CMC or the CBC, the builder shall obtain a permit from the enforcement agency prior to commencement of any of the work.

Corrections to avoid reporting a failure to the Data Registry shall not be made to a sampled or re-sampled unit after the HERS Rater selects the sample unit, or during the course of HERS testing of the unit. If it becomes evident that such corrections have been made to a sampled or re-sampled unit to avoid reporting a failure, field verification and diagnostic testing shall be required to be performed on 100 percent of the individual single zone package space conditioning equipment units in the group.

NA1.7 Third Party Quality Control Programs

The Commission may approve third-party quality control programs that serve some of the function of HERS Raters for diagnostic testing and field verification purposes but do not have the authority to sign compliance documentation as a HERS Rater. The third-party quality control program shall provide training to installers regarding compliance requirements for duct sealing. The third-party quality control program shall collect data from participating installers for each installation completed for compliance credit, provide data checking analysis to evaluate the validity and accuracy of the data to independently determine whether compliance has been achieved, provide direction to the installer to retest and correct problems when data checking determines that compliance has not been achieved, require resubmission of data when retesting and correction is directed, and maintain a database of all data submitted by installers and shall provide functionality that allows Energy Commission staff to query retained data or documents. The data that is collected by the third-party quality control program shall be more detailed than the data required for showing compliance with the Standards, shall provide an independent check on the validity and accuracy of the installer's claim that compliance has been achieved, and shall not be alterable by the installer to indicate that compliance has been achieved when in fact compliance has not been achieved.

The HERS Provider shall arrange for the services of a HERS Rater to conduct independent field verifications of the installation work performed by the participating Third Party Quality Control Program installing contractor. The HERS rater shall complete all of the responsibilities of a HERS Rater as specified in Appendix NA1, with the exception that sampling shall be completed for a group of up to thirty space conditioning systems with a minimum sample of one out of every thirty sequentially completed units from the group. The HERS Rater shall be an independent entity from the third-party quality control program. Re-sampling, full testing and corrective action shall be completed as specified in NA1.6.4 with the exception that the group size can be up to thirty systems.

The third party quality control program shall not impose restrictions on the HERS Rater or the HERS Provider that limit their independence, or the ability of the HERS Rater or the HERS Provider to properly perform their functions. For example, the third party quality control program shall not impose restrictions on a HERS Rater's use of equipment beyond that required by the Energy Commission.

The third-party quality control program shall meet all of the requirements imposed on of a HERS Rater specified in the Commission's HERS Program regulations (California Code of Regulations, Title 20, Division 2, Chapter 4, Article 8, Sections 1670 -1675), including the requirement that they be an independent entity from the builder the HERS Rater for the units, and the subcontractor installer as specified by Section 1673(j). However, a third-party quality control program may have business relationships with installers participating in the program to advocate or promote the program and an installer's participation in the program and to advocate or promote products that the third-party quality control program sells to installers as part of the program.

Prior to approval by the Commission, the third party quality control program shall provide a detailed explanation to the Commission of 1) the data that is to be collected from the installers, 2) the data checking process that will be used to evaluate the validity and accuracy of the data, 3) the justification for why this data checking process will provide strong assurance that the installation actually complies, and 4) the format for the database that will be maintained and the functionality that will allow Energy Commission staff to query retained data or documents. The third-party quality control program may apply for a confidential designation of this information as specified in the Commission's Administrative Regulations (California Code of Regulations, Title 20, Division 2, Chapter 7, Article 2, Section 2505). The third-party quality control program shall also provide a detailed explanation of the training that will be provided to installers and the procedures that it will follow to complete independent field verifications.

The third party quality control program licensed/certified installing contractor and the installing contractor's responsible installing technicians shall be required to be trained in quality installation procedures, the requirements of Appendix NA1, and any other applicable specialized third party quality control program-specific procedures as a condition for participation in the program. The training requirements also apply to the installing

contractor's specialty subcontractors who provide Third Party Quality Control Program services. All installation verification and diagnostic work performed in the program shall be subject to the same quality assurance procedures as required by the Energy Commission's HERS program regulations.

The third-party quality control program shall be considered for approval as part of the rating system of a HERS Provider, which is certified as specified in the Commission's HERS Program regulations, Title 20,Division 2, Chapter 4, Article 8, Section 1674. A third-party quality control program can be added to the rating system through the re-certification of a certified HERS Provider as specified by Title 20, Division 2, Chapter 4, Article 8, Section 1674(e).

NA1.8 Installer Requirements and HERS Procedures for Alterations

This section on alterations describes the differences that apply to alterations. Otherwise the procedures and requirements detailed in previous sections of NA1 shall also apply to alterations. For alterations, building owners or their agents may carry out the actions that are assigned to builders in previous sections of Appendix NA1.

Applicable procedures for registration of compliance documents described in Appendix NA1 shall also apply to alterations.

When compliance for an alteration requires diagnostic testing and field verification, the building permit applicant may choose for the testing and field verification to be completed for the permitted space conditioning system alone, or alternatively as part of a designated sample group of space conditioning systems for which the same installing company has completed work that requires field verification and diagnostic testing for compliance.

When sampling is utilized for HERS verification compliance for alterations, the buildings in a designated sample group are not required to be located within the same enforcement agency jurisdiction. However, to enable the enforcement agency to schedule testing to accomplish the corroboration of field verification and diagnostic testing procedures performed by builders, subcontractors, or certified HERS Rater as described in Section NA1.3.4, the enforcement agency may require that a separate system from the sample group that is located within its jurisdiction be tested.

The building permit applicant shall submit or make arrangements for submittal of the required Certificate of Compliance information to the HERS Provider and complete the applicable Certificate of Compliance documentation in accordance with the requirements in Standards Section 10-103(a)1 and 10-103(a)2.

When the enforcement agency does not require building design plans to be submitted with the application for a building permit for an alteration, the applicable registered Certificate of Compliance documentation specified in 10-103(a)1 is not required to be approved by the enforcement agency prior to issuance of a building permit, but shall be approved by the enforcement agency prior to final inspection of the dwelling unit, and shall be made available to the enforcement agency for all applicable inspections as specified in Standards Section 10-103(a)2A.

HERS Raters or other authorized users of the Data Registry may provide *documentation author* support to facilitate the submittal of any required Certificate of Compliance information to a Data Registry on behalf of the building owner or agent of the building owner, when such facilitation has been authorized by the building owner or agent of the building owner. *Documentation authors* shall provide an electronic signature to certify the documentation is accurate and complete. The building owner or agent of the building owner who is eligible under Division 3 of the Business and Professions Code to take responsibility for the design specification for the alteration shall provide an electronic signature to register the Certificate of Compliance, to certify the information provided on the Certificate is true and correct, to certify conformance with Part 6, and shall submit the registered Certificate of Compliance to the enforcement agency for approval.

The building permit applicant or building owner or agent shall make available to the HERS Rater a copy of the registered Certificate of Compliance approved by the enforcement agency.

The installer or field technician shall perform diagnostic testing and the procedures specified in Reference nonresidential Appendix NA1.4 and NA2.

When the installation is complete, the person responsible for the installation shall complete and sign the Certificate of Installation, and post a copy at the building site for review by the enforcement agency in conjunction

with requests for final inspection. The owner or subcontractor shall also provide a completed signed copy of the Certificate of Installation to the HERS Rater.

The field technician responsible for performing the acceptance test on the system shall complete the Certificate of Acceptance. The Certificate of Acceptance shall be signed by the system designer or installing contractor who is responsible for the system performance. A copy of the completed signed Certificate shall be posted at the building site for review by the enforcement agency in conjunction with requests for final inspection. The owner or subcontractor shall also provide a completed signed copy of the Certificate of Installation to the HERS Rater.

The HERS Rater shall verify that the Certificate of Compliance, Certificate of Installation, and Certificate of Acceptance have been completed for each unit having features requiring HERS verification, and that the field technician's diagnostic test results and all other Certificate of Acceptance information shows compliance consistent with the Certificate of Compliance for the system.

If group sampling is utilized for compliance, the HERS Rater shall define a group of up to seven units for sampling purposes, requiring that all units within the group have been serviced by the same installing company. The installing company may request a group for sampling that is smaller than seven units. Whenever the HERS Rater for an installing company is changed, a new group shall be established.

Re-sampling, full testing and corrective action shall be completed if necessary as specified in NA1.6.4. For alterations, the installing company shall offer to complete field verification and diagnostic testing and any necessary corrective action at no charge to building owners in the group.

The enforcement agency shall not approve the alteration until the enforcement agency has received a completed Certificate of Installation as specified in NA1.4, Certificate of Acceptance as specified in Section NA1.5, and a copy of the registered Certificate of Verification as specified in NA1.6.

Third Party Quality Control Programs, as specified in NA1.7, may also be used with alterations. When a Third Party Quality Control Program is used, the enforcement agency may approve compliance based on the Certificate of Installation, where data checking has indicated that the unit complies, on the condition that if HERS compliance verification procedures indicate that re-sampling, full testing or corrective action is necessary, such work shall be completed.

Nonresidential Appendix NA2

Appendix NA2 – Nonresidential Field Verification and Diagnostic Test Procedures

Appendix NA2 – Nonresidential Field Verification and Diagnostic Test Procedures 1

NA2.1 Procedures for Field Verification and Diagnostic Testing of Air Distribution Systems..... 1

NA2.1 Procedures for Field Verification and Diagnostic Testing of Air Distribution Systems

NA2.1.1 Purpose and Scope

1. NA2.1 contains procedures for field verification and diagnostic testing for air leakage in single zone, constant volume, nonresidential air distribution systems serving zones with 5000 ft² of conditioned floor area or less as required by Standards section 140.4(l).
2. NA2.1 procedures are applicable to new space conditioning systems in newly constructed buildings and to new or altered space conditioning systems in existing buildings.
3. NA2.1 procedures shall be used by installers, HERS Raters, and others who perform field verification of air distribution systems as required by Standards Section 140.4(l).
4. Table NA2.1-1 provides a summary of the duct leakage verification and diagnostic test protocols included in Section NA2.1, and the compliance criteria.

NA2.1.2 Instrumentation Specifications

The instrumentation for the air distribution diagnostic measurements shall conform to the following specifications:

NA2.1.2.1 Pressure Measurements

All pressure measurements shall be measured with measurement systems (i.e. sensor plus data acquisition system) having an accuracy of plus or minus 0.2 Pa. All pressure measurements within the duct system shall be made with static pressure probes, Dwyer A303 or equivalent.

NA2.1.2.2 Duct Leakage Measurements

All measurements of duct leakage airflow shall have an accuracy of plus or minus 3 percent of measured airflow or better using digital gauges.

NA2.1.2.3 Calibration

All instrumentation used for duct leakage diagnostic measurements shall be calibrated according to the manufacturer's calibration procedure to conform to the accuracy requirement specified in Section NA2.1.2.

NA2.1.3 Diagnostic Apparatus

NA2.1.3.1 Apparatus for Duct Pressurization and Leakage Flow Measurement

The apparatus for duct system pressurization and duct system leakage measurements shall consist of a duct system pressurization and leakage airflow measurement device meeting the specifications in Section NA2.1.2.

NA2.1.3.2 Apparatus for Smoke-Test of Accessible-Duct Sealing (Existing Duct Systems)

The apparatus for determining leakage in and verifying sealing of all accessible leaks in existing duct systems provide means for introducing controllable amounts of non-toxic visual or theatrical smoke into the duct pressurization apparatus for identifying leaks in accessible portions of the duct system. The means for generating smoke shall have sufficient capacity to ensure that any accessible leaks will emit visibly identifiable smoke.

NA2.1.4 Verification and Diagnostic Procedures

NA2.1.4.1 Nominal Air Handler Airflow

The nominal air handler airflow used to determine the target leakage rate for compliance for an air conditioner or heat pump shall be 400 cfm per rated ton of cooling capacity. Nominal air handler airflow for heating-only system furnaces shall be based on 21.7 cfm per kBtu/hr of rated heating output capacity.

NA2.1.4.2 Diagnostic Duct Leakage

Diagnostic duct leakage measurement shall be used by installers and HERS Raters to verify that duct leakage meets the compliance criteria for sealed duct systems for which field verification and diagnostic testing is required. Table NA2.1-1 summarizes the leakage criteria and the diagnostic test procedures that shall be used to demonstrate compliance.

Table NA2.1-1 – Duct Leakage Verification and Diagnostic Test Protocols and Compliance Criteria

Case	User and Application	Leakage Compliance Criteria, (% of Nominal Air Handler Airflow)	Procedure(s)
Sealed and tested new duct systems	Installer Testing HERS Rater Testing	6%	NA2.1.4.2.1
Sealed and tested altered existing duct systems	Installer Testing HERS Rater Testing	15%	NA2.1.4.2.1
Sealed and tested altered existing duct systems	Installer Testing and Inspection HERS Rater Testing and Verification	Fails Leakage Test but All Accessible Ducts are Sealed Inspection and Smoke Test with 100% Verification	NA2.1.4.2.2 NA2.1.4.2.3 NA2.1.4.2.4

NA2.1.4.2.1 Diagnostic Duct Leakage from Fan Pressurization of Ducts

The objective of this procedure is for an installer to determine and a HERS Rater to verify the leakage of a new or altered duct system. The duct leakage shall be determined by pressurizing the entire duct system ducts to 25 Pa (0.1 inches water) with respect to outside. The following procedure shall be used for the fan pressurization tests:

(a) Verify that the air handler, supply and return plenums and all the connectors, transition pieces, duct boots, and registers are installed, and ensure the following locations have been sealed:

1. Connections to plenums and other connections to the air-handling unit.

2. Refrigerant line and other penetrations into the air-handling unit.
3. Air handler access door or panel (do not use permanent sealing material, metal tape is acceptable).

The entire duct system including the air- handler shall be included in the test.

(b) For newly installed or altered ducts, verify that cloth backed rubber adhesive duct tape has not been used.

(c) Temporarily seal all the supply registers and return grilles, except for one large centrally located return grille or the air handler cabinet access door or panel. Verify that all outside air dampers and/or economizers are sealed prior to pressurizing the system.

(d) Attach the fan flowmeter device to the duct system at the unsealed return grille or the air handler cabinet access door or panel.

(e) Install a static pressure probe at a supply register located close to the air handler, or at the supply plenum.

(f) Adjust the fan flowmeter to produce a positive 25 Pa (0.1 inches water) pressure at the supply register or the supply plenum with respect to the outside or with respect to the building space with the entry door open to the outside.

(g) Record the flow through the flowmeter, this is the duct leakage flow at 25 Pa (0.1 inches water).

(h) Divide the duct leakage flow by the nominal air handler airflow determined by the procedure in Section NA2.1.4.1 and convert to a percentage. If the duct leakage flow percentage is equal to or less than the target compliance criterion from Table NA2.1-1, the system passes.

NA2.1.4.2.2 Sealing of All Accessible Leaks

For altered existing duct systems that are unable to pass the leakage test in Section NA2.1.4.2.1, the objective of this test is to verify that all accessible leaks are sealed. The following procedure shall be used:

(a) Complete the leakage test specified in Section NA2.1.4.2.1.

(b) Seal all accessible ducts.

(c) After sealing is complete, again use the procedure in NA2.1.4.2.1 to measure the leakage after duct sealing.

(d) Complete the Smoke Test as specified in NA2.1.4.2.3.

(e) Complete the Visual Inspection as specified in NA2.1.4.2.4.

All duct systems that fail to pass the leakage test specified in Section NA2.1.4.2.1 shall be tested and inspected by a HERS Rater to verify that all accessible ducts have been sealed and damaged ducts have been replaced. Compliance with HERS verification requirements shall not utilize group sampling procedures when the installer used the Sealing of All Accessible Leaks procedure in Section NA2.1.4.2.2.

NA2.1.4.2.3 Smoke-Test of Accessible-Duct Sealing

For altered existing ducts that fail the leakage tests, the objective of the smoke test is to confirm that all accessible leaks have been sealed. The following procedure shall be used:

(a) Inject either theatrical or other non-toxic smoke into a fan pressurization device that is maintaining a duct pressure difference of 25 Pa (0.1 inches water) relative to the duct surroundings, with all grilles and registers in the duct system sealed.

(b) Visually inspect all accessible portions of the duct system during smoke injection.

(c) The system shall pass the test if one of the following conditions is met:

1. No visible smoke exits the accessible portions of the duct system.

2. Smoke only emanates from the furnace cabinet which is gasketed and sealed by the manufacturer and no visible smoke exits from the accessible portions of the duct system.

NA2.1.4.2.4 Visual Inspection of Accessible Duct Sealing

For altered existing duct systems that are unable to pass the leakage test in Section NA2.1.4.2.1, the objective of this inspection in conjunction with the smoke test (Section NA2.1.4.2.3) is to confirm that all accessible leaks have been sealed. Visually inspect to verify that the following locations have been sealed:

(a) Connections to plenums and other connections to the air-handling unit.

(b) Refrigerant line and other penetrations into the air-handling unit.

(c) Air handler access door or panel (do not use permanent sealing material, metal tape is acceptable).

(d) Register boots sealed to surrounding material.

(e) Connections between lengths of duct, as well as connections to takeoffs, wyes, tees, and splitter boxes.

(this page left intentionally blank.)

Nonresidential Appendix NA3

Appendix NA3 – Fan Motor Efficiencies

Appendix NA3 – Fan Motor Efficiencies 1

Table NA3-1 – Fan Motor Efficiencies (< 1 HP)

Nameplate or Brake Horsepower	Standard Fan Motor Efficiency	NEMA* High Efficiency	Premium Efficiency
1/20	40%	...	...
1/12	49%	...	...
1/8	55%	...	...
1/6	60%	...	...
1/4	64%	...	...
1/3	66%	...	...
1/2	70%	76.0%	80.0%
3/4	72%	77.0%	84.0%
NOTE: For default drive efficiencies, see Nonresidential ACM Reference Manual			
*NEMA - Proposed standard using test procedures.			
Minimum NEMA efficiency per test IEEE 112b Rating Method.			

Table NA3-2 – Fan Motor Efficiencies (1 HP and over)

	Open Motors				Enclosed Motors			
Motor Horsepower	2 pole 3600 rpm	4 pole 1800 rpm	6 pole 1200 rpm	8 pole 900 rpm	2 pole 3600 rpm	4 pole 1800 rpm	6 pole 1200 rpm	8 pole 900 rpm
1	77.0	85.5	82.5	74.0	77.0	85.5	82.5	74.0
1.5	84.0	86.5	86.5	75.5	84.0	86.5	87.5	77.0
2	85.5	86.5	87.5	85.5	85.5	86.5	88.5	82.5
3	85.5	89.5	88.5	86.5	86.5	89.5	89.5	84.0
5	86.5	89.5	89.5	87.5	88.5	89.5	89.5	85.5
7.5	88.5	91.0	90.2	88.5	89.5	91.7	91.0	85.5
10	89.5	91.7	91.7	89.5	90.2	91.7	91.0	88.5
15	90.2	93.0	91.7	89.5	91.0	92.4	91.7	88.5
20	91.0	93.0	92.4	90.2	91.0	93.0	91.7	89.5
25	91.7	93.6	93.0	90.2	91.7	93.6	93.0	89.5
30	91.7	94.1	93.6	91.0	91.7	93.6	93.0	91.0
40	92.4	94.1	94.1	91.0	92.4	94.1	94.1	91.0
50	93.0	94.5	94.1	91.7	93.0	94.5	94.1	91.7
60	93.6	95.0	94.5	92.4	93.6	95.0	94.5	91.7
75	93.6	95.0	94.5	93.6	93.6	95.4	94.5	93.0
100	93.6	95.4	95.0	93.6	94.1	95.4	95.0	93.0
125	94.1	95.4	95.0	93.6	95.0	95.4	95.0	93.6
150	94.1	95.8	95.4	93.6	95.0	95.8	95.8	93.6
200	95.0	95.8	95.4	93.6	95.4	96.2	95.8	94.1
250	95.0	95.8	95.4	94.5	95.8	96.2	95.8	94.5
300	95.4	95.8	95.4		95.8	96.2	95.8	
350	95.4	95.8	95.4		95.8	96.2	95.8	—
400	95.8	95.8	95.8		95.8	96.2	95.8	
450	95.8	96.2	96.2		95.8	96.2	95.8	
500	95.8	96.2	96.2		95.8	96.2	95.8	

Nonresidential Appendix NA4

Appendix NA4 – Compliance Procedures for Relocatable Public School Buildings

Appendix NA4 – Compliance Procedures for Relocatable Public School Buildings 1

NA4.1 Purpose and Scope 1

NA4.2 The Plan Check Process 1

NA4.3 The Compliance Process 2

NA4.4 Documentation 2

NA4.5 Optional Features 3

NA4.1 Purpose and Scope

This document describes the compliance procedures that shall be followed when the whole building performance approach is used for relocatable public school buildings. Relocatable public school buildings are constructed (manufactured) at a central location and could be shipped and installed in any California climate zone. Furthermore, once they arrive at the school site, they could be positioned so that the windows face in any direction. The portable nature of relocatable classrooms requires that a special procedure be followed for showing compliance when the whole building performance method is used. Compliance documentation for relocatable public school buildings will be reviewed by the Division of the State Architect (DSA).

NA4.2 The Plan Check Process

The Division of the State Architect is the enforcement agency for relocatable public school buildings. Since relocatables are manufactured in batches, like cars or other manufactured products, the plan check and approval process occurs in two phases. The first phase is when the relocatable manufacturer completes design of a model or modifies a model. At this point, complete plans and specifications are submitted to the DSA; DSA reviews the plans for compliance with the energy standards and other California Building Code (CBC) requirements; and a “pre-check” (PC) design approval is granted. Once the PC design is approved, a school district or the manufacturer may file an “over-the-counter” application with DSA to construct one or more relocatables. The over-the-counter application is intended to be reviewed quickly, since the PC design has already been pre-checked. The over-the-counter application is the building permit application for construction and installation of a relocatable at a specific site, and includes the approved PC design drawings as well as site development plans for the proposed site where the relocatable will be installed. An over-the-counter application also is required for the construction of a stockpile of one or more relocatables based on the approved PC design drawings. Stockpiled relocatables are stored typically at the manufacturer’s yard until the actual school site is determined where the relocatable will be installed. Another over-the-counter application is required to install a previously stockpiled relocatable at which time site development plans for the proposed site are checked.

The effective date for all buildings subject to the energy standards is the date of permit application. If a building permit application is submitted on or after the effective date, then the new energy standards apply. For relocatable classrooms, the date of the permit application is the date of the over-the-counter application, not the date of the application for PC design approval. The PC design is only valid until the code changes.

NA4.3 The Compliance Process

Like other nonresidential buildings, the standard design for relocatable public school buildings is defined by the prescriptive requirements. In the case of relocatables, there are two choices of prescriptive criteria:

(a) Table 140.3-D in the Standards may be used for relocatable school buildings that can be installed in any climate zone in the state. In this case, the compliance is demonstrated in climates 14, 15, and 16 and this is accepted as evidence that the classroom will comply in all climate zones. These relocatables will have a permanent label that allows it to be used anywhere in the state as specified in Section 140.3(a)8 of the Standards.

(b) Table 140.3-B in the Standards may be used for relocatable school buildings that are to be installed in only specific climate zones. In this case, compliance is demonstrated in each climate zone for which the relocatable has been designed to comply. These relocatables will have a permanent label that identifies in which climate zones it may be installed as specified in Section 140.3(a)8 in the Standards. It is not lawful to install the relocatable in other climate zones.

The building envelope of the standard design has the same geometry as the proposed design, including window area and position of windows on the exterior walls, and meets the prescriptive requirements specified in Section 140.3. Lighting power for the standard design meets the prescriptive requirements specified in Section 140.6. The HVAC system for the standard design meets the prescriptive requirements specified in Section 140.4. The system typically installed in relocatables is a single-zone packaged heat pump or furnace. Most relocatable school buildings do not have water heating systems, so this component is neutral in the analysis. Other modeling assumptions such as equipment loads are the same for both the proposed design and the standard design and are specified in the Nonresidential ACM Reference Manual.

Manufacturers shall certify compliance with the standards and all compliance documentation shall be provided. If the manufacturer chooses to comply using Table 140.3-B in the Standards for compliance in only specific climate zones, then the manufacturers shall indicate the climates zones for which the classroom will be allowed to be located as specified in Section 140.3(a)8 of the Standards.

Since relocatable public school buildings could be positioned in any orientation, it is necessary to perform compliance calculations for multiple orientations. Each model with the same proposed design energy features shall be rotated through 8 different orientations either in climate zones 14, 15 and 16 for relocatables showing statewide compliance or in the specific climate zones that the manufacturer proposes for the relocatable to be allowed to be installed, i.e., the building with the same proposed design energy features is rotated in 45 degree increments and shall comply in each case. Approved compliance programs shall automate the rotation of the building and reporting of the compliance results to insure it is done correctly and uniformly and to avoid unnecessary documentation.

NA4.4 Documentation

The program shall present the results of the compliance calculations in a format similar to Table NA4-3. For each of the cases (8orientations times number of climates), the Time Dependent Valuation (TDV) energy for the *Standard Design* and the *Proposed Design* are shown (the energy features of the *Proposed Design* shall be the same for all orientations). The final column shows the compliance margin, which is the difference between the TDV energy for the *Proposed Design* and the *Standard Design*. Approved compliance programs shall scan the data presented in the Table NA4-3 format and prominently highlight the case that has the smallest compliance margin. Complete compliance documentation shall be submitted for the building and energy features that achieve compliance in all of the climate zones and orientations as represented by the case with the smallest margin. DSA may require that compliance documentation for other cases also be submitted; showing that the *Proposed Design* building and energy features are identical to the case submitted, in each orientation and climate zone. Table NA4-3 shows rows for climate zones 14, 15, and 16, which are the ones used when the criteria of Table 140.3-D in the Standards is used to show compliance throughout the state. If the criteria of Table 140.3-B in the Standards is used, then rows shall be added to the table for each climate zone for which the manufacturer wants the relocatable to be allowed to be installed.

Table NA4-3 – Summary of Compliance Calculations Needed for Relocatable Classrooms

			TDV Energy	
Climate Zone	Azimuth	Proposed Design	Standard Design	Compliance Margin
14	30			
	75			
	120			
	165			
	210			
	255			
	300			
	345			
15	30			
	75			
	120			
	165			
	210			
	255			
	300			
	345			
16	30			
	75			
	120			
	165			
	210			
	255			
	300			
	345			

NA4.5 Optional Features

Relocatable classrooms may come with a variety of optional features, like cars. A school district can buy the "basic model" or it can pay for options. Many of the optional features do not affect energy efficiency and are not significant from the perspective of energy code compliance. Examples include floor finishes (various grades of carpet or tiles), casework, and ceiling and wall finishes. Other optional features do affect energy performance such as window construction, insulation, lighting systems, lighting controls, HVAC ductwork, HVAC equipment, and HVAC controls.

When a manufacturer offers a relocatable classroom model with a variety of options, it is necessary to identify those options that affect energy performance and to show that the model complies with any combination of the optional features. Most of the time, optional energy features are upgrades that clearly improve performance. If the basic model complies with the Standards, then adding any or all of the optional features would improve performance. The following are examples of optional features that are clear upgrades in terms of energy performance:

(a) HVAC equipment that has both a higher SEER and higher EER than the equipment in the basic model.

(b) Lighting systems that result in less power than the basic model.

(c) Lighting controls, such as occupancy sensors, that are recognized by the standards and for which power adjustment factors in Table 140.6-A are published in Section 140.6.

(d) Windows that have both a lower SHGC and lower U-factor (limited to relocatables that do not take credit for daylighting).

(e) Wall, roof or floor construction options that result in a lower U-factor than the basic model.

For energy code compliance purposes, it is necessary to show that every variation of the relocatable classroom that is offered to customers will comply with the Standards. There are two approaches for achieving this, as defined below:

1. **Basic Model Plus Energy Upgrades Approach.** The simplest approach is to show that the basic model complies with the Standards and that all of the options that are offered to customers are clear energy upgrades that would only improve performance. As long as each and every measure in the basic model is met or exceeded by the energy upgrades, the relocatable classroom will comply with the Standards.

   While clear upgrades are obvious in most cases, the following are some examples of options that are not energy upgrades, for which additional analysis would be needed to show compliance that every combination of options comply.

   (a) HVAC equipment that has a higher SEER, but a lower EER.

   (b) Windows that lower SHGC but increase U-factor, or vice versa.

   (c) Insulation options that reduce the U-factor for say walls, but increase it for the roof.

   (d) Any other combination of measures that results in the performance of anyone measure being reduced in comparison to a complying basic model.

2. **Modeling of Every Combination Approach.** A more complex whole building performance approach is required when a model is available with options which in combination may or may not comply. In this case every combination of options shall be modeled, and the specific combinations that comply shall be determined and only those combinations shall be allowed. This approach, while possible, requires considerably more effort on the part of the relocatable manufacturer and its energy consultant. It also places a greater burden on DSA when they issue the over-the-counter building permit for the PC design that only allows specific combinations of energy options. DSA would have to examine the specific optional features that are proposed with the over-the-counter application and make sure that the proposed combination of measures achieves compliance.

   The manufacturer or its energy consultant would need to prepare a table or chart that shows all of the acceptable combinations that achieve compliance. This chart could be quite complex, depending on the number of optional features that are offered.

   Table NA4-4 is intended to illustrate the complexity that could be involved in modeling of every combination of energy features. It shows a list of typical optional features that would affect energy performance. In this example, there are two possible for each of the eight options, e.g. the feature is either there or not (in an actual case there could be a different number of options and a different number of states for any option). In the example any one of the features could be combined with any of the others. The number of possible combinations in this example is two (the number of states) to the eighth power (the number of measures that have two states). The number of possible options is then 2^8 or 256. This is the number of combinations that would need to be modeled in order to determine which combination of optional features achieves compliance.

Table NA4-4 – Examples of Optional Features for Relocatable Classrooms

	Options Offered	States
1	Efficient lighting option	Yes/No
2	High efficiency heat pump	Yes/No
3	Improved wall insulation	Yes/No
4	Improved roof insulation	Yes/No
5	Occupancy sensor for lighting	Yes/No
6	Low-e windows	Yes/No
7	Skylights	Yes/No
8	Daylighting Controls	Yes/No

(This page left intentionally blank)

Nonresidential Appendix NA5

RESERVED

Nonresidential Appendix NA6

Appendix NA6 – Alternate Default Fenestration Procedure to Calculate Thermal Performance

Appendix NA6 – Alternate Default Fenestration Procedure to Calculate Thermal Performance..... 1

NA6.1 Scope 1

NA6.2 Default U-factor 2

NA6.3 Default Solar Heat Gain Coefficient, SHGC 3

NA6.4 Default Visible Transmittance, VT 3

NA6.5 Responsibilities for Compliance 3

NA6.1 Scope

This procedure provides non-rate site-built fenestration up to 1000 ft^2 other than a repair or replacement glass an option to comply with the Energy Standards. The Center of Glass (COG) values are required to be used in Equation NA6-1, NA6-2 and NA6-3 and shall be determined by the manufacturers in accordance with NFRC procedures. A copy of the manufacturers' cut sheets or data sheet shall be provided identifying the COG values as an attachment with the Fenestration Certificate (FC-1).

(a) NONRESIDENTIAL

For Nonresidential up to1,000 ft^2 in area of site-built fenestration other than a repair or replacement glass Alternate Default Fenestration Procedure shall be used when no NFRC Label Certificate is available. The manufacturer cut sheet or data sheet shall be used to identify the COG values for the U-factor$_C$, Solar Heat Gain Coefficient ($SHGC_C$) and Visible Transmittance (VT_C). If unable to determine center of glass information, the alternative Energy Commissions Default Tables in Section 116 of the Energy Standards must be use to determine the appropriate fenestration default values. The values listed in Table 110.6-A for U-factors and Table 110.6-B for SHGC values are whole fenestration product values. Since there is no default Visible Transmittance values available, the alternative is; VT_C =1.0 and will be use to determine the total fenestration product, VT_T, which includes the glass and frame of the fenestration.

For Nonresidential the altered fenestration other than a repair shall meet the values listed in Table 141.0-A unless the altered glass area meets the Exception to Section 140.1(b)2A in the Energy Standards. If the altered fenestration or glass alone is not rated by NFRC then the Alternate Default Fenestration Procedure can be used similar to Nonresidential up to 1000 ft^2 as described above.

(b) RESIDENTIAL

For Residential special case, the Alternate Default Fenestration Procedure option is available only when non-rated site-built fenestration is being installed in a residential dwelling. For Residential site-built fenestration up to 250 ft^2 in area or 0.5% times the conditioned floor area (CFA) whichever is greater shall meet Sections §110.6(a)2 and §110.6(a)3.

The Alternate Default Fenestration calculated values are typically less efficient than those listed in Prescriptive Approach in Table 150.1-A of the Energy Standards and may not comply, alternatively the Performance Approach will have to be used to meet energy compliance. The Visible Transmittance (VT) value is not required to meet residential energy compliance. If unable to determine center of glass

(COG) thermal performance values from the manufacturer, then alternatively the Energy Commissions Default Tables shall be used; Table 110.6-A for U-factors and Table 110.6-B for SHGC values and documented on the on a self produced manufactured default label. The default label should be attached to the unrated fenestration product. An example of the label can be found in the Residential Compliance Manual.

(c) DOCUMENTATION

1. The Energy Commission's FC-1 Label Certificate Form for nonresidential application shall be use to document the Alternate Default Fenestration calculated values for each non-rated site-built fenestration; or
2. For residential, a manufactured Default Label attached to each non-rated site-built fenestration.

The equations listed below are to be used for only for unrated site-built fenestration that meets the requirements in either item 1 or 2 above.

NA6.2 Default U-factor

Equation NA6-1

$$U_T = C_1 + (C_2 \text{ X } U_c)$$

Where:

U_T = U-factor Is the Total Performance of the fenestration including glass and frame

C_1 = Coefficient selected from Table NA6-5

C_2 = Coefficient selected from Table NA6-5

U_C = Center of glass U-factor calculated in accordance with NFRC 100 Section 4.5.3.1 http://www.nfrc.org/software.aspx

Table NA6-5 – U-factor Coefficients

Product Type	Frame Type	C_1	C_2
Site-Built Vertical Fenestration	Metal	0.311	0.872
	Metal Thermal Break	0.202	0.867
	Non-Metal	0.202	0.867
Skylights with a Curb	Metal	0.711	1.065
	Metal Thermal Break	0.437	1.229
	Non-Metal	0.437	1.229
Skylights with no Curb	Metal	0.195	0.882
	Metal Thermal Break	0.310	0.878
	Non-Metal	0.310	0.878

NA6.3 Default Solar Heat Gain Coefficient, SHGC

The SHGC of the fenestration product shall be calculated using the following equation:

Equation NA6-2

$$SHGC_T = 0.08 + (0.86 \times SHGC_c)$$

Where:

$SHGC_T$ = SHGC Is the Total Performance of the fenestration including glass and frame

$SHGC_C$ = Center of glass SHGC calculated in accordance with NFRC 200 Section 4.5.1.1 http://www.nfrc.org/software.aspx

NA6.4 Default Visible Transmittance, VT

(a) Equation NA6-3 - VT of Center of Glass (COG) calculation

$$VT_T = VT_F \times VT_C$$

Where:

VT_T = Is the Total Performance of the fenestration including glass and frame

VT_F = 0.53 for projecting windows, such as casement and awning windows

VT_F = 0.67 for operable or sliding windows

VT_F = 0.77 for fixed or non operable windows

VT_F= 0.88 for curtain wall/storefront, Site-built and manufactured non-curb mounted skylights

VT_F = 1.0 for Curb Mounted manufactured Skylights

VT_C = Center of glass VT is calculated in accordance with NFRC 200 Section 4.5.1.1 or NFRC 202 for Translucent Products or NFRC 203 for Tubular Daylighting Devices and Hybrid Tubular Daylighting Devices or ASTM E972 http://www.nfrc.org/software.aspx

NA6.5 Responsibilities for Compliance

This section describes the responsibilities of energy consultants, designers, architects, builders, installers, and enforcement agencies when using the procedures of this appendix.

NA6.5.1 Energy Consultants, Designers, Architects

The person with responsibility for preparing the compliance documentation shall establish the inputs from the following:

(a) The center of glass U-factor, SHGC and VT shall be taken from manufacturers' literature and determined using methods consistent with NFRC 100, NFRC 200, NFRC 202 and NFRC 203 procedures.

(b) The frame type (Metal, Metal Thermal Break, Non-metal) shall be verified from manufacturers' literature and through observations of frame sections provided by the manufacturer.

For the Prescriptive Overall Compliance Method, the calculated values shall be entered on the prescriptive ENV-1-C form. In addition the FC-1 Label Certificate must be also filled and located at the project site location in according to Reference Nonresidential Appendix NA7.

For the Performance Compliance Approach, the calculated values shall be entered and documented on the Performance PERF-1 and Performance ENV-1-C forms. In addition the FC-1 Label Certificate must be filled and located at the project site location in according to Reference Nonresidential Appendix NA7.

For both the prescriptive and performance compliance method, the building plans shall contain a window schedule that lists the calculated values in which matches the FC-1 Form or improved thermal performance values than listed on the FC-1 Form. The specifications of the windows shall be consistent with the values used in this procedure, e.g. frame type glazing product, etc.

Permit applications must include fenestration U-factor, SHGC and VT values documentation for the building plan checker. This documentation must include a copy of the manufacturer's documentation showing the Glazing Type information (center of glass U-factor, center of glass SHGC, center of glass VT, number of panes, coatings and the frame type (frame material type, presence of thermal breaks, and identification of structural glazing (glazing with no frame)) that is used to determine U_T, $SHGC_T$, and VT_T. If the proposed design uses multiple fenestration products, manufacturer's documentation for each fenestration product shall be attached to the plans. Manufacturer's documentation must be provided for each unique combination of glazing and frame used for compliance and shall be located at the project's location.

If mixed fenestration is included in the compliance analysis, then the compliance submittal must clearly be identified which are certified fenestration products, and which are non-certified fenestration products (site-built less than 1,000 ft² or skylights). The manufacturer's documentation and calculations for each product must be included in the submittal, and either the ENV-1C or PERF-1 form must be included on the building plans. All non-certified fenestration products and is less than 1,000 ft² or skylights for commercial and requires a filled FC-1 or for Residential up to 250 ft² in area or 0.5% time CFA whichever is greater.

NA6.5.2 Builder and Installer Responsibilities

The builder must ensure that the fenestration (glass and frame) documentation showing the U factor, SHGC, and VT used for determining compliance is provided to the installer. The builder is responsible for ensuring that the persons preparing compliance documentation are specifying products the builder intends to install. The builder is responsible for ensuring that the installer installs glass with thermal performance equal to or better than the thermal performance used for energy compliance and that the frame type installed is the same as that used for compliance. The builder also must ensure that the field inspector for the enforcement agency is provided with manufacturer's documentation attached to each Energy Commission's FC-1 Label Certificate showing the thermal performance and method of determining thermal performance for the actual fenestration products installed. The builder should verify that these fenestration products are clearly shown on the building plans before fenestration products are purchased and installed. A copy of the manufacturer's documentation and FC-1 shall be located at the project location.

NA6.5.3 Enforcement Agency Responsibilities

NA6.5.3.1 Plan Checker

The enforcement agency plan checker or reviewer is responsible for ensuring that the plans identify all site-built fenestration and skylights occasionally residential site-built fenestration will be used and also identified on the FC-1 Form. The plan checker shall ensure that site-built fenestration and skylights using the alternate default procedure shall meet the following:

(a) U-factors, SHGC and VT (for Commercial use only) values are clearly shown on the window schedules on the plans and documented on the energy compliance forms, and

(b) Manufacturer documentation of the Glazing Type and Frame Type has been provided for the each of the fenestration products using the procedure of this appendix and documents the Center of Glass values; and

(c) Verify the building meets the less than 1,000 ft² requirement for commercial or for Residential up to 250 ft² in area or 0.5% time CFA whichever is greater; and

(d) For Nonresidential a completely filled out FC-1 Label Certificate for each non-rated site-built fenestration product or for Residential verify the non-rated site-built fenestration efficiencies match the building plans and energy compliance forms; and

(e) Building plans should be consistent with the energy compliance documentation.

NA6.5.3.2 Enforcement Agency Inspector

(a) For Residential up to 250 ft² in area or 0.5% time CFA whichever is greater of non-rated site-built fenestration is allowed. The inspector should verify the manufactures self made default label attached to each residential site-built fenestration product and that it matches with residential energy compliance forms.

(b) For Nonresidential no greater than 1,000 ft² of site-built fenestration is allowed for this alternative procedure. The field inspector is responsible for ensuring that the U-factor, SHGC and VT for the installed fenestration match the building plans and energy compliance forms. Inspection of the Commission's FC-1 Label Certificate shall match each of the Prescriptive ENV form or the Performance PERF and ENV forms for the installed site-built fenestration product.

(This page left intentionally blank.)

Nonresidential Appendix NA7

Appendix NA7 – Installation and Acceptance Requirements for Nonresidential Buildings and Covered Processes

Appendix NA7 – Acceptance and Installation Requirements for Nonresidential Buildings and Covered Processes 1

NA7.1 Purpose and Scope 1

NA7.2 Introduction 2

NA7.3 Roles and Responsibilities 2

NA7.4 Building Envelope Acceptance Tests 3

NA7.5 Mechanical Systems Acceptance Tests 8

NA7.6 Lighting Control Acceptance Requirements 23

NA7.7 Lighting Control Installation Requirements 29

NA7.8 Outdoor Lighting Controls Installed to Comply with Section 130.2(c) 32

Lighting systems that meet the criteria of §130.2(c) 33

NA7.9 Sign Lighting Acceptance Tests 33

NA7.10 Refrigerated Warehouse Refrigeration System Acceptance Tests 33

NA7.11 Commercial Kitchen Exhaust System Acceptance Tests 39

NA7.12 Parking Garage Ventilation System Acceptance Tests 40

NA7.13 Compressed Air System Acceptance Tests 41

NA7.1 Purpose and Scope

This appendix defines acceptance procedures that must be completed on certain controls and equipment before the installation is deemed to be in compliance with the Standards. These requirements apply to all newly installed equipment for which there are acceptance requirements in new and existing buildings. The procedures apply to nonresidential, high-rise residential, hotel/motel buildings and covered processes as defined by the California Energy Commission's Energy Efficiency Standards for Nonresidential Buildings (Standards). The purpose of the acceptance tests is to assure:

(a) The presence of equipment or building components according to the specifications in the compliance documents.

(b) Installation quality and proper functioning of the controls and equipment to meet the intent of the design and the Standards.

Modifications and additions to these acceptance requirements needed to improve clarity or to better ensure proper installation and functionality may be approved by the Energy Commission.

NA7.2 Introduction

Acceptance requirements are defined as implementation of targeted inspection checks and functional and performance testing to determine whether specific building components, equipment, systems, and interfaces between systems conform to the criteria set forth in the Standards and to related construction documents (plans or specifications). Acceptance requirements improve code compliance effectiveness and help meet the expected level of performance.

Acceptance testing is not intended to take the place of commissioning or test and balance procedures that a building owner might incorporate into a building project. It is an adjunct process focusing only on demonstrating compliance with the Standards.

Third-party review of the information provided on Certificate of Acceptance documentation is not required, with one exception: duct leakage diagnostic test results for some constant volume space conditioning systems serving less than 5,000 square feet of conditioned floor area are required to be verified by a certified HERS Rater as specified in Standards Section 140.4(l).

NA7.3 Roles and Responsibilities

Individuals who perform the field testing and verification work, and provide the information required for completion of the Certificate of Acceptance documentation are not required to be licensed professionals. The person who signs the Certificate of Acceptance document to certify compliance with the acceptance requirements shall be licensed as specified in Standards Section 10-103(a)4.

NA7.3.1 Responsible Person

The Certificate of Acceptance shall be signed by the person who is in charge of the acceptance testing for the scope of work identified on the Certificate of Acceptance. The *Responsible Person* shall be a licensed professional who is eligible under Division 3 of the Business and Professions code in the applicable classification, to take responsibility for the aspects of the system design, construction, or installation applicable to the scope of work identified on the Certificate of Acceptance. The *Responsible Person* shall review the information on the Certificate of Acceptance document and sign the document to certify compliance with the acceptance requirements. The *Responsible Person* shall assume responsibility for the acceptance testing work performed by the *Field Technician* agent(s) or employee(s), and if necessary shall interview the person who performed the acceptance test work in order to ascertain whether the testing work reported on the Certificate of Acceptance was completed as reported and is consistent with the *Responsible Person's* expectation. The *Responsible Person* may also perform the required acceptance testing work, and in that case shall also sign as the *Field Technician* on the Certificate of Acceptance document.

NA7.3.2 Field Technician

The *Field Technician* is responsible for performing the acceptance test procedures and documenting the results on the Certificate of Acceptance document. The *Field Technician* shall sign the Certificate of Acceptance to certify that the information provided on the Certificate of Acceptance is true and correct.

NA7.3.3 Documentation Author

Documentation Authors who provide administrative support for document preparation for Certificate of Acceptance documentation shall sign a declaration statement on the documents they prepare to certify the information provided on the documentation is accurate and complete.

NA7.3.4 Enforcement Agency

The Certificate of Acceptance shall be submitted to the enforcement agency in order to receive the final Certificate of Occupancy. The enforcement agency shall have the authority to require the *Responsible Person* and *Field Technician* to demonstrate competence, to its satisfaction.

NA7.4 Building Envelope Acceptance Tests

NA7.4.1 Fenestration

(a) Each fenestration product shall provide an NFRC Label Certificate or the Commission's Fenestration Certificate, FC-1, to identify the thermal performance (e.g. U-factor, SHGC, and VT) of each fenestration product being installed. The labels shall be located at the job site for verification by the enforcement agency. In addition, the responsible party shall fill out the Fenestration Acceptance Certificate. The responsible party shall verify the thermal performance of each specified fenestration product being installed matches the label certificate, energy compliance documentation and building plans. A copy of the certificate shall be given to the building owner and the enforcement agency for their records.

NA7.4.1.1 Elements Requiring Verification:

The responsible party shall verify the following:

(a) The thermal performance for each fenestration product matches the building plans, energy compliance documentation, and the label certificate; and

(b) The delivery receipt or purchase order matches the delivered fenestration product(s); and

(c) Verify the NFRC Label Certificate is filled out and includes an NFRC's Certified Product Directory (CPD) number and a Certificate Number (when the Component Modeling Approach Label is submitted).

(d) For non-rated fenestration verify FC-1 is completely filled.

(e) The Certificate of Acceptance form is completed and signed.

NA7.4.1.2 Required Documentation

(a) NFRC Product Label Certificate:

1. The Component Modeling Approach (CMA) Label Certificate can list a single or multiple fenestration products, each with its own CPD number on the left column and verified for authenticity by accessing http://cpd.nfrc.org/cpd2/ ; or
2. The Certificate Number for each CMA Label Certificate can be verified for authenticity by accessing http://cmast.nfrc.org/Project/CertificateFind.aspx ; or
3. Commission's Fenestration Label Certificate:
4. The FC-1 are used to document Fenestration products not certified or rated by NFRC by using the Commission's Default Table values in §110.6- A and Table 110.6-B or the calculated values as indicated Nonresidential Appendix NA6.

(b) Purchase Order or Receipt:

1. A copy of the purchase order or a detailed payment receipt shall be used to cross reference with the NFRC Product Label Certificate CPD number or the FC-1 values; and
2. The purchase order or a detailed payment receipt should match the energy compliance documentation and the building plans.

(c) Fenestration Building Plans:

1. The building plans shall list in a schedule for each fenestration product to be installed in the building.

(d) Certificate of Acceptance Form:

1. The acceptance form shall be filled out by the responsible party and signed; and

2. The signed Certificate of Acceptance shall be submitted to enforcement agency or field inspector; and
3. A copy of the Certificate of Acceptance shall be given to the building owner.

NA7.4.2 Window Films

NA7.4.2.1 Procedures

These procedures detail the installation and verification protocols necessary to meet acceptance requirements of window films. Each window film product shall be provided with a temporary NFRC Label on the box to identify the thermal performance (e.g. U-factor, Solar Heat Gain Coefficient(SHGC), and Visible Transmittance (VT)) of each window film product being installed. The labels, an Energy Commission Default FC-1 form or an NFRC label, shall be located at the job site for verification by the enforcement agency. In addition, the responsible person shall fill out the Installation Certificate (ENV-INST) and the Certificate of Acceptance (ENV-2A), Fenestration Acceptance Certificate. The responsible person shall verify the thermal performance of each window film to be installed matches the energy Certificate of Compliance (ENV-1C) documentation and building plans. A copy of the Installation and Acceptance certificate shall be given to the building owner and the enforcement agency for their records.

NA7.4.2.2 The Responsible Person or Installer Shall Meet the Following Protocols before Installation:

(a) Verify the name of the manufacture or brand name matches with building plans;

(b) From the building plans or energy compliance forms, identify the azimuth orientation in degrees or in cardinal orientation for each of the window film to be installed to ensure the correct window film specifications are installed in the appropriate orientation;

(c) Verify the temporary NFRC label on the box for each window film's U-factor, Solar Heat Gain (SHGC) and Visible Transmittance (VT) matches the energy compliance ENV-1C documentation and building plans, if the U-factor and SHGC values do not match refer back to the Responsible Person of the building construction or enforcement agency. Energy recompliance may have to be done and building plans updated;

(d) Verify the NFRC Window Film Label Certificate is filled out and includes an NFRC's Certified Product Directory (CPD) number;

(e) List the NFRC Certified Product Directory (CPD) identification (ID) number provided on the label on the ENV-INST form; See http://cpd.nfrc.org/cpd2/;

(f) If no NFRC Label is included on the box or identification of the window film then verify with the Responsible Person of the building construction or enforcement agency to ensure the window film is actually meets or exceeds the energy specifications before installation;

(g) Installation of window films shall follow the **International Window Film Association** (IWFA) Visual Quality Standards for Applied Window Film (dated May 15, 1999); and

(h) After the installation the installer completes and signs the Declaration Statement on the Installation Certificate ENV-INST. A signed copy of the ENV-INST Certificate(s) shall remain at the job site for verification by the building inspector.

NA7.4.2.3 Field Technician or Responsible Person Shall Meet the Following Protocols After Installation:

(a) Verify the Installation Certificate ENV-INST and the Declaration Statement is signed before inspection; and

(b) The window film(s) label on the box matches the ENV-INST and building plan's schedule, U-factor, SHGC, and VT for each of the installed window films; and

(c) If any of the acceptance procedures (ENV-2A) fails, refer back to the Responsible Person, Installer, or the enforcement agency for correction; and, after correction verify failed procedures have been corrected and re-inspect again; and

(d) After window film inspection, complete all parts of the ENV-2A, including the signature of the Declaration Statements; and

(e) Provide certificates and additional copies to the builder, enforcement agency and building owner at occupancy.

NA7.4.2.4 Documentation at Occupancy:

The following documentation shall be made available to the responsible party of construction or building owner at occupancy;

(a) A completed and signed ENV-INST and ENV-2A, form(s);

(b) The IWFA Visual Quality Standards for Applied Window Film (dated May 15, 1999), a copy can be obtained through www.iwfa.com;

(c) A sample (8" by 10") of the film installed with a copy of its Performance Specification Sheet attached; and

1. A 10 or more year Warranty Certificate(s).

NA7.4.3 Dynamic Glazing

NA7.4.3.1 Procedures

These procedures detail the installation and verification protocols necessary to meet acceptance requirements of dynamic glazing. Each dynamic glazing product shall be provided with a temporary NFRC Label on the glazing or an NFRC Label Certificate to identify the thermal performance (e.g. U-factor, Solar Heat Gain Coefficient(SHGC), and Visible Transmittance (VT)) of each product being installed. The labels, an Energy Commission Default Values FC-1 form or an NFRC label shall be located at the job site for verification by the enforcement agency. In addition, the responsible person shall fill out the Installation Certificate (ENV-INST) and the Certificate of Acceptance (ENV-2A), Fenestration Acceptance Certificate. The responsible person shall verify 1) the dynamic glazing to be installed matches the energy Certificate of Compliance (ENV-1C) documentation and building plans. A copy of the Installation and Acceptance certificate shall be given to the building owner and the enforcement agency for their records.

NA7.4.3.2 The Responsible Person or Installer Shall Meet the Following Protocols before Installation:

(a) Verify the dynamic glazing matches with building plans and Energy Compliance forms;

(b) From the building plans or energy compliance forms, identify the azimuth orientation in degrees or in cardinal orientation for each of the dynamic glazing to be installed to ensure the correct dynamic glazing specifications or model are installed in the appropriate orientation;

(c) Verify dynamic glazing controls if applicable matches the building plans schedule;

(d) Verify NFRC's Certified Product Directory (CPD) number if applicable. See http://cpd.nfrc.org/cpd2/ ;

(e) If no NFRC Label or FC-1 is Form is included, then verify with the Responsible Person of the building construction or enforcement agency to ensure the dynamic glazing is actually meets or exceeds the energy specifications before installation;

(f) Installation of dynamic glazing shall meet the manufactures installation instructions;

(g) After the installation the installer completes and signs the Declaration Statement on the Installation Certificate ENV-INST. A signed copy of the ENV-INST Certificate(s) shall remain at the job site for verification by the building inspector.

NA7.4.3.3 Field Technician or Responsible Person Shall Meet the Following Protocols After Installation:

(a) Verify the Installation Certificate ENV-INST and the Declaration Statement is signed before inspection of the installation; and

(b) When controls are installed with the dynamic glazing, it should be verified that it meets the exact operation specifications of the dynamic glazing installation, functional and testing instructions.

(c) After dynamic glazing inspection is complete ensure the ENV-2A certificate form is completed and including the signature of the Declaration Statements; and

(d) Provide certificates and additional copies to the builder, enforcement agency and building owner at occupancy.

NA7.4.3.4 Documentation at Occupancy:

The following documentation shall be made available to the responsible party of construction or building owner at occupancy;

(a) A completed and signed ENV-INST and ENV-2A, form(s);

1. If supplied by the manufacturer, a copy of the manufacturer's warranty and user manual.

NA7.5 Mechanical Systems Acceptance Tests

NA7.5.1 Outdoor Air

NA7.5.1.1 Variable Air Volume Systems Outdoor Air Acceptance

NA7.5.1.1.1 Construction Inspection

Prior to functional testing, verify and document the following:

(a) Sensor used to control outdoor air flow is either factory calibrated or field calibrated.

(b) Attach calibration certification or results.

(c) Dynamic damper control is being used to control outside air.

(d) Specify the type of dynamic control being utilized to control outside air.

(e) Specify the method of delivering outside air to the unit.

(f) Pre-occupancy purge has been programmed for the 1-hour period immediately before the building is normally occupied.

NA7.5.1.1.2 Functional Testing

Step 1: If the system has an outdoor air economizer, force the economizer high limit to disable economizer control (e.g. for a fixed drybulb high limit, lower the setpoint below the current outdoor air temperature).

Step 2: Adjust supply airflow to achieve design airflow or maximum airflow at full cooling. Verify and document the following:

(a) Measured outside airflow reading is within 10 percent of the total ventilation air called for in the Certificate of Compliance.

(b) Outside air damper position stabilizes within 5 minutes.

Step 3: Adjust supply airflow to either the sum of the minimum zone airflows, full heating, or 30 percent of the total design airflow. Verify and document the following:

(a) Measured outside airflow reading is within 10 percent of the total ventilation air called for in the Certificate of Compliance.

(b) Outside air damper position stabilizes within 5 minutes.

Step 4: Restore system to “as-found” operating conditions

NA7.5.1.2 Constant Volume System Outdoor Air Acceptance

NA7.5.1.2.1 Construction Inspection

Prior to Functional Testing, verify and document the following:

(a) System is designed to provide a fixed minimum OSA when the unit is on.

(b) Specify the method of delivering outside air to the unit.

(c) Pre-occupancy purge has been programmed for the 1-hour period immediately before the building is normally occupied.

(d) Minimum position is marked on the outside air damper.

(e) The system has means of maintaining the minimum outdoor air damper position.

NA7.5.1.2.2 Functional Testing

Step 1: If the system has an outdoor air economizer, force the economizer to the minimum position and stop outside air damper modulation (e.g. for a fixed drybulb high limit, lower the setpoint below the current outdoor air temperature)

(a) Measured outside airflow reading is within 10 percent of the total ventilation air called for in the Certificate of Compliance.

NA7.5.2 Constant-Volume, Single-Zone, Unitary Air Conditioners and Heat Pumps

NA7.5.2.1 Construction Inspection

Prior to Functional Testing, verify and document the following:

(a) Thermostat is located within the space-conditioning zone that is served by the HVAC system.

(b) Thermostat meets the temperature adjustment and dead band requirements of Standards §120.2(b).

(c) Occupied, unoccupied, and holiday schedules have been programmed per the facility's schedule.

(d) Pre-occupancy purge has been programmed to meet the requirements of Standards §120.1(c)2.

NA7.5.2.2 Functional Testing

Step 1: Disable economizer and demand control ventilation systems (if applicable).

Step 2: Simulate a heating demand during the occupied condition. Verify and document the following:

(a) Supply fan operates continually.

(b) The unit provides heating.

(c) No cooling is provided by the unit.

(d) Outside air damper is at minimum position.

Step 3: Simulate operation in the dead band during occupied condition. Verify and document the following:

(e) Supply fan operates continually.

(f) Neither heating nor cooling is provided by the unit.

(g) Outside air damper is at minimum position.

Step 4: Simulate cooling demand during occupied condition. Lock out economizer (if applicable). Verify and document the following:

(h) Supply fan operates continually.

(i) The unit provides cooling.

(j) No heating is provided by the unit.

(k) Outside air damper is at minimum position.

Step 5: Simulate operation in the dead band during unoccupied mode. Verify and document the following:

(l) Supply fan is off.

(m) Outside air damper is fully closed.

(n) Neither heating nor cooling is provided by the unit.

Step 6: Simulate heating demand during unoccupied conditions. Verify and document the following:

(o) Supply fan is on (either continuously or cycling).

(p) Heating is provided by the unit.

(q) No cooling is provided by the unit.

(r) Outside air damper is either closed or at minimum position.

Step 7: Simulate cooling demand during unoccupied condition. Lock out economizer (if applicable). Verify and document the following:

(s) Supply fan is on (either continuously or cycling).

(t) Cooling is provided by the unit.

(u) No heating is provided by the unit.

(v) Outside air damper is either closed or at minimum position.

Step 8: Simulate manual override during unoccupied condition. Verify and document the following:

(w) System operates in “occupied” mode.

(x) System reverts to “unoccupied” mode when manual override time period expires.

Step 9: Restore economizer and demand control ventilation systems (if applicable), and remove all system overrides initiated during the test.

NA7.5.3 Air Distribution Systems

NA7.5.3.1 Construction Inspection

Prior to Functional Testing on new duct systems, verify and document the following:

(a) Duct connections meet the requirements of Standards §120.4.

(b) Specify choice of drawbands.

(c) Flexible ducts are not constricted in any way.

(d) Duct leakage tests shall be performed before access to ductwork and connections are blocked.

(e) Joints and seams are properly sealed according to the requirements of Standards §120.4.

(f) Joints and seams are not sealed with cloth back rubber adhesive tape unless used in combination with Mastic and drawbands. Cloth backed tape may be used if tape has been approved by the CEC. Ducts are fully accessible for testing.

(g) Insulation R-Values meet the minimum requirements of §120.4(a).Insulation is protected from damage and suitable for outdoor service if applicable per Standards §120.4(f).

Prior to Functional Testing on all new and existing duct systems, visually inspect to verify that the following locations have been sealed:

(h) Connections to plenums and other connections to the forced air unit

(i) Refrigerant line and other penetrations into the forced air unit

(j) Air handler door panel (do not use permanent sealing material, metal tape is acceptable)

(k) Register boots sealed to surrounding material

(l) Connections between lengths of duct, as well as connections to takeoffs, wyes, tees, and splitter boxes

NA7.5.3.2 Functional Testing

Step 1: Perform duct leakage test as specified by Reference Nonresidential Appendix NA2 to verify the duct leakage conforms to the requirements of Standards §140.4(l) and §141.0(b)2D.

Step 2: Obtain HERS Rater field verification as specified in Reference Nonresidential Appendix NA1.

NA7.5.4 Air Economizer Controls

NA7.5.4.1 Construction Inspection

Prior to Functional Testing, verify and document the following:

(a) Economizer lockout setpoint complies with Table 140.4(e)-C of Section140.4(e)3.

(b) If the high-limit control is fixed dry-bulb, it shall have an adjustable setpoint.

(c) Economizer lockout control sensor is located to prevent false readings.

(d) Sensor performance curve is provided by factory with economizer instruction material.

(e) Sensor output value measured during sensor calibration is plotted on the performance curve.

(f) Primary damper control temperature sensor located after the cooling coil to maintain comfort.

(g) Economizer damper moves freely without binding.

(h) Unitary systems with an economizer have control systems, including two-stage or electronic thermostats, that cycle compressors off when economizers can provide partial cooling

(i) Economizer reliability features are present per Standards Section 140.4(e)4.

(j) System is designed to provide up to 100 percent outside air without over-pressurizing the building.

(k) For systems with DDC controls lockout sensor(s) are either factory calibrated or field calibrated.

(l) For systems with non-DDC controls, manufacturer's startup and testing procedures have been applied.

(m) For direct expansion systems 65,000 Btu/hr and less, thermostats (e.g. two stage or electronic) and control system has capacity to modulate compressor or cycle compressor off during periods where economizer cooling can partially meet the cooling load as per Section 140.4(e)2.B.i.

(n) For direct expansion systems, equipment submittal specifies compressor capacity steps and/or compressor capacity modulation complying with the stages or modulation required in Section 140.4(e)2.B.ii.

(o) Provide an economizer specification sheet proving capability of at least 100,000 actuations.

(p) Provide a product specification sheet proving compliance with AMCA Standard 500 damper leakage at 10 cfm/sf.

(q) Unit has a direct drive modulating actuator with gear driven interconnections.

NA7.5.4.2 Functional Testing

Step 1: Disable demand control ventilation systems (if applicable).

Step 2: Enable the economizer and simulate a cooling demand large enough to drive the economizer fully open. Verify and document the following:

(a) Economizer damper is 100 percent open and return air damper is 100 percent closed.

(b) For systems that meet the criteria of §140.4(e)2.B.i, verify that the economizer is 100 percent open part of the time and the compressor cycles on and off when the cooling demand can no longer be met by the economizer alone.

(c) For systems that meet the criteria of §140.4(e)2.b.ii, verify that the economizer provides partial cooling even when additional mechanical cooling is required to meet the remainder of the cooling load.

(d) All applicable fans and dampers operate as intended to maintain building pressure.

(e) The unit heating is disabled (if unit has heating capability).

Step 3: Disable the economizer and simulate a cooling demand. Verify and document the following:

(f) Economizer damper closes to its minimum position.

(g) All applicable fans and dampers operate as intended to maintain building pressure.

(h) The unit heating is disabled (if unit has heating capability).

Step 4: If unit has heating capability, simulate a heating demand and set the economizer so that it is capable of operating (i.e. actual outdoor air conditions are below lockout setpoint). Verify the following:

(i) The economizer is at minimum position

Return air damper opens

Step 5: Turn off the unit. Verify and document the following:

(j) Economizer damper closes completely.

Step 6: Restore demand control ventilation systems (if applicable) and remove all system overrides initiated during the test.

NA7.5.5 Demand Control Ventilation (DCV) Systems

NA7.5.5.1 Construction Inspection

Prior to Functional Testing, verify and document the following:

(a) Carbon dioxide control sensor is factory calibrated per §120.1(c)4.

(b) The sensor is located in the high density space between 3 ft and 6 ft above the floor or at the anticipated level of the occupants' heads.

(c) DCV control setpoint is at or below the CO_2 concentration permitted by §120.1(c)4.C.

NA7.5.5.2 Functional Testing

Step 1: Disable economizer controls

Step 2: Simulate a signal at or slightly above the CO_2 concentration setpoint required by §120.1(c)4.C. Verify and document the following:

(a) For single zone units, outdoor air damper modulates open to satisfy the total ventilation air called for in the Certificate of Compliance.

(b) For multiple zone units, either outdoor air damper or zone damper modulate open to satisfy the zone ventilation requirements.

Step 3: Simulate signal well below the CO_2 setpoint. Verify and document the following:

(c) For single zone units, outdoor air damper modulates to the design minimum value.

(d) For multiple zone units, either outdoor air damper or zone damper modulate to satisfy the reduced zone ventilation requirements.

Step 4: Restore economizer controls and remove all system overrides initiated during the test.

Step 5: With all controls restored, apply CO_2 calibration gas at a concentration slightly above the setpoint to the sensor. Verify that the outdoor air damper modulates open to satisfy the total ventilation air called for in the Certificate of Compliance.

NA7.5.6 Supply Fan Variable Flow Controls

NA7.5.6.1 Construction Inspection

Prior to Functional Testing, verify and document the following:

(a) Supply fan includes device(s) for modulating airflow, such as variable speed drive or electrically commutated motor.

(b) For multiple zone systems:

1. Discharge static pressure sensors are either factory calibrated or field-calibrated.
2. The static pressure location, setpoint, and reset control meets the requirements of §140.4(c)2.B and §140.4(c)2.C.

NA7.5.6.2 Functional Testing

Step 1: Simulate demand for full design airflow. Verify and document the following:

(a) Supply fan controls modulate to increase capacity.

(b) For multiple zone systems, supply fan maintains discharge static pressure within +/-10 percent of the current operating setpoint.

(c) Supply fan controls stabilize within a 5 minute period.

Step 2: Simulate demand for reduced or minimum airflow. Verify and document the following:

(d) Supply fan controls modulate to decrease capacity.

(e) Current operating setpoint has decreased (for systems with DDC to the zone level).

(f) For multiple zone systems, supply fan maintains discharge static pressure within +/-10 percent of the current operating setpoint.

(g) Supply fan controls stabilize within a 5 minute period.

Step 3: Restore system to correct operating conditions

NA7.5.7 Valve Leakage Test

NA7.5.7.1 Construction Inspection

Prior to Functional Testing, verify and document the following:

(a) Valve and piping arrangements were installed per the design drawings.

NA7.5.7.2 Functional Testing

Step 1: For each of the pumps serving the distribution system, dead head the pumps using the discharge isolation valves at the pumps. Document the following:

(a) Record the differential pressure across the pumps.

(b) Verify that this is within 5 percent of the submittal data for the pump.

Step 2: Reopen the pump discharge isolation valves. Automatically close all valves on the systems being tested. If 3-way valves are present, close off the bypass line. Verify and document the following:

(c) The valves automatically close.

(d) Record the pressure differential across the pump.

(e) Verify that the pressure differential is within 5 percent of the reading from Step 1 for the pump that is operating during the valve test.

Step 3: Restore system to correct operating conditions.

NA7.5.8 Supply Water Temperature Reset Controls

NA7.5.8.1 Construction Inspection

Prior to Functional Testing, verify and document the following:

(a) Supply water temperature sensors have been either factory or field calibrated.

NA7.5.8.2 Functional Testing

Step 1: Change reset control variable to its maximum value. Verify and document the following:

(a) Chilled or hot water temperature setpoint is reset to appropriate value.

(b) Verify that actual supply temperature changes to within 2 percent of the new setpoint.

Step 2: Change reset control variable to its minimum value. Verify and document the following:

(c) Chilled or hot water temperature setpoint is reset to appropriate value.

(d) Verify that actual supply temperature changes to within 2 percent of the new setpoint.

Step 3: Restore reset control variable to automatic control. Verify and document the following:

(e) Chilled or hot water temperature set-point is reset to appropriate value.

(f) Verify that actual supply temperature changes to within 2 percent of the newl setpoint.

NA7.5.9 Hydronic System Variable Flow Controls

NA7.5.9.1 Construction Inspection

Prior to Functional Testing, verify and document the following:

(a) The static pressure location, setpoint, and reset control meets the requirements of the Standards Section 140.4(k)6B.

(b) Pressure sensors are either factory or field calibrated.

NA7.5.9.2 Functional Testing

Step 1: Modulate control valves to reduce water flow to 50 percent of the design flow or less, but not lower than the pump minimum flow. Verify and document the following:

(a) Pump operating speed decreases (for systems with DDC to the zone level).

(b) Current operating setpoint has not increased (for all other systems that are not DDC).

(c) System pressure is within 5 percent of current operating setpoint.

(d) System operation stabilizes within 5 minutes after test procedures are initiated.

Step 2: Open control valves to increase water flow to a minimum of 90 percent design flow. Verify and document the following:

(e) Pump speed increases

(f) Pumps are operating at 100 percent speed.

(g) System pressure is greater than the setpoint in Step 1.

(h) System pressure is either within ±5 percent of current operating setpoint. System operation stabilizes within 5 minutes after test procedures are initiated.

Step 3: Restore system to correct operating conditions.

NA7.5.10 Automatic Demand Shed Control Acceptance

NA7.5.10.1 Construction Inspection

Prior to Acceptance Testing, verify and document the following:

(a) That the EMCS interface enables activation of the central demand shed controls.

NA7.5.10.2 Functional Testing

Step 1: Engage the global demand shed system. Verify and document the following:

(a) That the cooling setpoint in non-critical spaces increases by the proper amount.

(b) That the cooling setpoint in critical spaces do not change.

Step 2: Disengage the global demand shed system. Verify and document the following:

(c) That the cooling setpoint in non-critical spaces return to their original values.

(d) That the cooling setpoint in critical spaces do not change.

NA7.5.11 Fault Detection and Diagnostics (FDD) for Packaged Direct-Expansion Units

NA7.5.11.1 Construction Inspection

Prior to Functional Testing, verify and document the following:

(a) Verify fault detection and diagnostics (FDD) hardware is installed on HVAC unit.

(b) Verify the FDD system matches the make and model reported on the design drawings.

(c) Verify the following air temperature sensors are permanently installed:

1. outside air
2. supply air
3. return air

(d) Verify the controller has the capability of displaying the value of the following parameters:

1. Air temperatures: outside air, supply air, return air.
2. Refrigerant pressure and temperature sensors (if present, their output should be made available).

(e) Verify the controller provides system status by indicating the following conditions:

1. Free cooling available
2. Economizer enabled
3. Compressor enabled
4. Heating enabled
5. Mixed air low limit cycle active

NA7.5.11.2 Functional Testing

For each HVAC unit to be tested, complete the following:

NA7.5.11.2.1 Functional Testing for Air Temperature Sensor Failure/Fault

Step 1: Verify the FDD system indicates normal operation.

Step 2: Disconnect outside air temperature sensor from unit controller. Verify and document the following:

(a) FDD system reports a fault.

Step 3: Connect outside air temperature sensor to unit controller. Verify and document the following:

(b) FDD system indicates normal operation.

NA7.5.11.2.2 Functional Testing for Excess Outside Air

Step 1: Coordinate this test with NA7.5.1 Outdoor Air

(a) If NA7.5.1 Outdoor Air passes, verify FDD system indicates normal operation.

NA7.5.11.2.3 Functional Testing for Economizer Operation

Step 1: Interfere with normal unit operation so test NA7.5.4 Air Economizer Controls fails by immobilizing the outdoor air economizer damper according to manufacturer's instructions

(a) After NA7.5.4 Air Economizer Controls fails, verify FDD system reports a fault.

Step 2: Successfully complete and pass NA7.5.4 Air Economizer Controls

(b) After NA7.5.4 Air Economizer Controls passes, verify FDD system reports normal operation.

NA7.5.11.2.4 Functional Testing for Refrigerant Diagnostic Sensors

Step 1: During normal cooling operation, record refrigerant temperatures and pressures, and saturated discharge temperature and saturated suction temperature, if displayed by the unit controller.

Step 2: During same operating conditions as Step 1, install calibrated refrigerant gauge with an accuracy of plus or minus 3% shall be used to determine and record saturated discharge temperature and saturated suction temperatures. If either temperature determined is more than 5 F different than recorded in Step 1, test has failed. Otherwise, test passes.

(a) Refrigeration gauges shall be calibrated according to the manufacturer's calibration procedure to conform to the accuracy requirement specified. All testers performing diagnostic tests shall obtain evidence from the manufacturer that the equipment meets the accuracy specifications. The evidence shall include equipment model, serial number, the name and signature of the person of the test laboratory verifying the accuracy, and the instrument accuracy. All diagnostic testing equipment is subject to re-calibration when the period of the manufacturer's guaranteed accuracy expires.

NA7.5.12 Automatic Fault Detection and Diagnostics (FDD) for Air Handling Units and Zone Terminal Units.

NA7.5.12.1 Functional Testing for Air Handling Units

Testing of each AHU with FDD controls shall include the following tests.

(a) Sensor drift/failure:

Step 1: Disconnect outside air temperature sensor from unit controller.

Step 2: Verify that the FDD system reports a fault.

Step 3: Connect OAT sensor to the unit controller.

Step 4: Verify that FDD indicates normal system operation.

(b) Damper/actuator fault:

Step 1: From the control system workstation, command the mixing box dampers to full open (100 percent outdoor air).

Step 2: Disconnect power to the actuator and verify that a fault is reported at the control workstation.

Step 3: Reconnect power to the actuator and command the mixing box dampers to full open.

Step 4: Verify that the control system does not report a fault.

Step 5: From the control system workstation, command the mixing box dampers to a full-closed position (0 percent outdoor air),

Step 6: Disconnect power to the actuator and verify that a fault is reported at the control workstation.

Step 7: Reconnect power to the actuator and command the dampers closed.

Step 8: Verify that the control system does not report a fault during normal operation.

(c) Valve/actuator fault:

Step 1: From the control system workstation, command the heating and cooling coil valves to full open or closed, then disconnect power to the actuator and verify that a fault is reported at the control workstation.

(d) Inappropriate simultaneous heating, mechanical cooling, and/or economizing:

Step 1: From the control system workstation, override the heating coil valve and verify that a fault is reported at the control workstation.

Step 2: From the control system workstation, override the cooling coil valve and verify that a fault is reported at the control workstation.

Step 3: From the control system workstation, override the mixing box dampers and verify that a fault is reported at the control workstation.

NA7.5.12.2 Functional Testing for Zone Terminal Units

Testing shall be performed on one of each type of terminal unit (VAV box) in the project. A minimum of 5 percent of the terminal boxes shall be tested.

(a) Sensor drift/failure:

Step 1: Disconnect the tubing to the differential pressure sensor of the VAV box.

Step 2: Verify that control system detects and reports the fault.

Step 3: Reconnect the sensor and verify proper sensor operation.

Step 4: Verify that the control system does not report a fault.

(b) Damper/actuator fault:

1. Damper stuck open.

   Step 1: Command the damper to be fully open (room temperature above setpoint).

   Step 2: Disconnect the actuator to the damper.

   Step 3: Adjust the cooling setpoint so that the room temperature is below the cooling setpoint to command the damper to the minimum position. Verify that the control system reports a fault.

   Step 4: Reconnect the actuator and restore to normal operation.

2. Damper stuck closed.

Step 1: Set the damper to the minimum position.

Step 2: Disconnect the actuator to the damper.

Step 3: Set the cooling setpoint below the room temperature to simulate a call for cooling. Verify that the control system reports a fault.

Step 4: Reconnect the actuator and restore to normal operation.

(c) Valve/actuator fault (For systems with hydronic reheat):

Step 1: Command the reheat coil valve to (full) open.

Step 2: Disconnect power to the actuator. Set the heating setpoint temperature to be lower than the current space temperature, to command the valve closed. Verify that the fault is reported at the control workstation.

Step 3: Reconnect the actuator and restore normal operation.

(d) Feedback loop tuning fault (unstable airflow):

Step 1: Set the integral coefficient of the box controller to a value 50 times the current value.

Step 2: The damper cycles continuously and airflow is unstable. Verify that the control system detects and reports the fault.

Step 3: Reset the integral coefficient of the controller to the original value to restore normal operation.

(e) Disconnected inlet duct:

Step 1: From the control system workstation, commands the damper to full closed, then disconnect power to the actuator and verify that a fault is reported at the control workstation.

(f) Discharge air temperature sensor:

Step 1: Adjust zone setpoints to drive the box from dead band to full heating.

Step 2: Verify that in heating, the supply air temperature resets up to the maximum setpoint while the airflow is maintained at the dead band flow rate.

Step 3: Verify that after the supply air temperature is reset up to the maximum setpoint, the airflow rate then increases up to the heating maximum flow rate in order to meet the heating load.

NA7.5.13 Distributed Energy Storage DX AC Systems Acceptance Tests[1]

These acceptance requirements apply only to constant or variable volume, direct expansion (DX) systems with distributed energy storage (DES/DXAC). These acceptance requirements are in addition to those for other systems or equipment such as economizers, packaged equipment, etc.

NA7.5.13.1 Construction Inspection

Prior to Performance Testing, verify and document the following:

(a) The water tank is filled to the proper level.

(b) The water tank is sitting on a foundation with adequate structural strength.

(c) The water tank is insulated and the top cover is in place.

(d) The DES/DXAC is installed correctly (refrigerant piping, etc.).

(e) Verify that the correct model number is installed and configured.

[1] From AEC, Distributed Energy Storage for Direct-Expansion Air Conditioners, January 27, 2005

NA7.5.13.2 Equipment Testing

Step 1: Simulate cooling load during daytime period (e.g. by setting time schedule to include actual time and placing thermostat cooling set-point below actual temperature). Verify and document the following:

(a) Supply fan operates continually.

(b) If the DES/DXAC has cooling capacity, DES/DXAC runs to meet the cooling demand (in ice melt mode).

(c) If the DES/DXAC has no ice and there is a call for cooling, the DES/DXAC runs in direct cooling mode.

Step 2: Simulate no cooling load during daytime condition. Verify and document the following:

(d) Supply fan operates as per the facility thermostat or control system.

(e) The DES/DXAC and the condensing unit do not run.

Step 3: Simulate no cooling load during morning shoulder time period. Verify and document the following:

(f) The DES/DXAC is idle.

Step 4: Simulate a cooling load during morning shoulder time period. Verify and document the following:

(g) The DES/DXAC runs in direct cooling mode.

NA7.5.13.3 Calibrating Controls

Set the proper time and date, as per manufacturer's installation manual for approved installers.

NA7.5.14 Thermal Energy Storage (TES) Systems

The following acceptance tests apply to thermal energy storage systems that are used in conjunction with chilled water air conditioning systems.

NA7.5.14.1 Eligibility Criteria

The following types of TES systems are eligible for compliance credit:

(a) Chilled Water Storage

(b) Ice-on-Coil

(c) Ice Harvester

(d) Brine

(e) Ice-Slurry

(f) Eutectic Salt

(g) Clathrate Hydrate Slurry (CHS)

The following Certificate of Compliance information for both the chiller and the storage tank shall be provided on the plans to document the key TES System parameters and allow plan check comparison to the inputs used in the DOE-2 simulation. DOE-2 keywords are shown in ALL CAPITALS in parentheses.

Chiller:

(h) Brand and Model

(i) Type (Centrifugal, Reciprocating, Other)

(j) Capacity (tons) (SIZE)

(k) Starting Efficiency (kW/ton) at beginning of ice production (COMP - KW/TON - START)

(l) Ending Efficiency (kW/ton) at end of ice production (COMP - KW/TON/END)

(m) Capacity Reduction (% / °F) (PER – COMP - REDUCT/F)

Storage Tank:

(n) Storage Type (TES-TYPE)

(o) Number of Tanks (SIZE)

(p) Storage Capacity per Tank (ton-hours) (SIZE)

(q) Storage Rate (tons) (COOL – STORE - RATE)

(r) Discharge Rate (tons) (COOL – SUPPLY - RATE)

(s) Auxiliary Power (watts) (PUMPS + AUX - KW)

(t) Tank Area (CTANK – LOSS - COEFF)

(u) Tank Insulation (R - Value) (CTANK – LOSS - COEFF)

NA7.5.14.2 Functional Testing

Acceptance testing also shall be conducted and documented on the Certificate of Acceptance in two parts:

In the TES System Design Verification part, the installing contractor shall certify the following information, which verifies proper installation of the TES System consistent with system design expectations:

(a) The TES system is one of the above eligible systems.

(b) Initial charge rate of the storage tanks (tons).

(c) Final charge rate of the storage tank (tons).

(d) Initial discharge rate of the storage tanks (tons).

(e) Final discharge rate of the storage tank (tons).

(f) Charge test time (hrs).

(g) Discharge test time (hrs).

(h) Tank storage capacity after charge (ton-hrs).

(i) Tank storage capacity after discharge (ton-hrs).

(j) Tank standby storage losses (UA).

(k) Initial chiller efficiency (kW/ton) during charging.

(l) Final chiller efficiency (kW/ton) during charging.

In the TES System Controls and Operation Verification part, the installing contractor also shall complete the following acceptance testing to ensure the TES System is controlled and operates consistent with the compliance simulation. The installing contractor shall convey the results of the testing to the enforcement agency using the Certificate of Acceptance.

(a) Verify that the TES system and the chilled water plant is controlled and monitored by an energy management system (EMS).

(b) Force the time to be between 9:00 p.m. and 9:00 a.m. and simulate a partial or no charge of the tank and simulate no cooling load by setting the indoor temperature setpoint higher than the ambient temperature. Verify that the TES system starts charging (storing energy).

(c) Force the time to be between 6:00 p.m. and 9:00 p.m. and simulate a partial charge on the tank and simulate a cooling load by setting the indoor temperature setpoint lower than the ambient temperature. Verify that the TES system starts discharging.

(d) Force the time to be between noon and 6:00 p.m. and simulate a cooling load by lowering the indoor air temperature setpoint below the ambient temperature. Verify that the tank starts discharging and the compressor is off.

(e) Force the time to be between 9:00 a.m. to noon, and simulate a cooling load by lowering the indoor air temperature setpoint below the ambient temperature. Verify that the tank does not discharge and the cooling load is met by the compressor only.

(f) Force the time to be between 9:00 p.m. and 9:00 a.m. and simulate a full tank charge by changing the sensor that indicates tank capacity to the Energy Management System so that it indicates a full tank capacity. Verify that the tank charging is stopped.

(g) Force the time to be between noon and 6:00 p.m. and simulate no cooling load by setting the indoor temperature setpoint above the ambient temperature. Verify that the tank does not discharge and the compressor is off.

NA7.5.15 Supply Air Temperature Reset Controls

The following acceptance tests apply to supply air temperature reset controls.

NA7.5.15.1 Construction Inspection

Prior to functional testing, verify and document the following:

(a) Supply air temperature reset controls are installed per the requirements of the 2013 Building Energy Efficiency Standards Section 140.4(f).

(b) All system air temperature sensors are factory or field calibrated within 2% of a calibrated reference temperature sensor. Attach a copy of the calibration certificate or field verification results.

(c)

(d) Document current supply air temperature.

NA7.5.15.2 Functional Testing

(a) Check to make sure that chilled and hot water coils, if used, are not already fully open and calling for maximum cooling/heating. If this is the case, reverse Steps 1 and 2 And/or change the setpoint range as necessary to conduct this test.

(b) Identify the reset controller parameter.

Step 1: During occupied mode, adjust the reset control parameter to decrease the supply air temperature (to the lower supply temperature limit). Verify and document the following:

(c) Supply air temperature controls modulate as intended .

(d) Actual supply air temperature decreases to meet the new setpoint within ±2ºF.

(e) Supply air temperature stabilizes within 15 minutes.

Step2: During occupied mode, adjust the reset control parameter to increase the supply air temperature (to the upper supply temperature limit). Verify and document the following:

(f) Supply air temperature controls modulate as intended.

(g) Actual supply air temperature increases to meet the new setpoint within ±2ºF.

(h) Supply air temperature stabilizes within 15 minutes.

Step 3: Restore reset control parameter to automatic control. Verify and document the following:

(i) Supply air temperature controls modulate as intended.

(j) Actual supply air temperature changes to meet the new setpoint within ±2ºF.

(k) Supply air temperature stabilizes within 15 minutes.

NA7.5.16 Condenser Water Supply Temperature Reset Controls

The following acceptance tests apply to condenser water temperature reset controls.

NA7.5.16.1 Construction Inspection

Prior to functional testing, verify and document the following:

(a) Condenser water supply system, control system, and temperature control sequence, including condenser water supply high and low limits, are available and documented in the building documents.

(b) Cooling tower fan motors are operational, and cooling tower fan speed controls (e.g. VSDs) are installed, operational, and connected to cooling tower fan motors per Original Equipment Manufacturer (OEM) start-up manuals and sequence of operation.

(c) Cooling tower fan control sequence, including tower design wetbulb temperature and approach, is available and documented in the building documents.

(d) The following temperature sensors are installed per plans: outdoor air dry-bulb, outdoor air wet-bulb, entering condenser water, and leaving chilled water. Note any discrepancies.

(e) All ambient dry bulb temperature, relative humidity, and pressure sensors used by controller are factory calibrated within 2% of a calibrated reference sensor. Attach a copy of calibration certificate or field verification results.

(f) Document the current outdoor air dry bulb and wet bulb temperatures, entering condenser water temperature, and leaving chilled water temperature readings from the control system.

NA7.5.16.2 Functional Testing

(a) The system cooling load must be sufficiently high to run the test. If necessary, artificially increase the evaporator load to perform the functional tests, or wait until a time of stable chiller operation. If necessary, reverse Steps 1 and 2 in the test based on atmospheric conditions and buildings loads.

(b) If testing in cold ambient conditions, ensure that freeze protection controls are installed and functional to prevent equipment damage.

(c) If the actual control sequence differs significantly from that implied by the tests and/or has already been tested during the building commissioning process, attach a description of the control sequence, a description of the tests that were done to verify the system operates according to the sequence, the test results, and a plot of associated trend data.

(d) Identify the reset control parameter.

Step 1: Adjust the reset control parameter to decrease the condenser water supply temperature toward the lower supply temperature limit. Allow time for the system to stabilize. Verify and document the following:

(a) Condenser water supply temperature controls modulate as intended.

(b) Actual condenser water supply temperature decreases to meet the new setpoint within ±2ºF.

(c) Cooling tower fan(s) stage properly and/or adjust speed accordingly to meet lower setpoint.

(d) Chiller load amperage decrease.

Step 2: Adjust the reset control parameter to increase the condenser water supply temperature toward the upper supply temperature limit.

Verify and document the following:

(e) Condenser water supply temperature controls modulate as intended.

(f) Actual condenser water supply temperature increases to meet the new setpoint within ±2ºF.

(g) Cooling tower fan(s) stage properly and/or adjust speed accordingly to meet the lower setpoint.

(h) Chiller load amperage increase.

Step 3: Restore reset control parameter to automatic control. Verify and document the following:

(i) Condenser water supply temperature controls modulate as intended.

(j) Actual condenser water supply temperature changes to meet the new setpoint.

(k) Cooling tower fan(s) and chiller(s) stage properly and/or adjust speed accordingly to return to normal operation and meet the setpoint.

NA7.6 Lighting Control Acceptance Requirements

Lighting control acceptance testing shall be performed on:

(a) Automatic Daylighting Controls complying with Section 130.1(d)

(b) Shut-off Controls complying with Section 130.1(c)

(c) Demand Responsive Controls in accordance with Section 130.1(e).

NA7.6.1 Acceptance tests for Automatic Daylighting Controls complying with Section 130.1(d)

NA 7.6.1.1 Construction Inspection

Verify that automatic daylighting controls qualify as one of the required control types, are installed, and fully functional in accordance with each applicable requirement in Section 130.1(d), and list each specific exception claimed, from Section 130.1(d).

NA 7.6.1.2 Functional testing

All photocontrols serving more than 5,000 ft² of daylit area shall undergo functional testing. Photocontrols that are serving smaller spaces may be sampled as follows:

For buildings with up to five (5) photocontrols, all photocontrols shall be tested. For buildings with more than five (5) photocontrols, sampling may be done on spaces with similar sensors and cardinal orientations of glazing. If the first photocontrol in the sample group passes the functional test, the remaining building spaces in the sample group also pass. If the first photocontrol in the sample group fails the functional test, the rest of the photocontrols in the group shall be tested. If any tested photocontrol fails the functional test, it shall be repaired, replaced or adjusted until it passes the test.

For each photocontrol to be tested do the following:

(a) Test each group of lights controlled separately by the photocontrol according to the following protocol. In all interior spaces other than parking garages, a separate test shall be conducted for daylighting control of the primary sidelit zone separate from the secondary sidelit zone.

NA 7.6.1.2.1 Continuous Dimming Control Systems

This requirement is for systems that have more than 10 levels of controlled light output in a given zone.

(a) Identify the minimum daylighting location in the controlled zone (Reference Location). This can be identified using either the illuminance method or the distance method.

Illuminance Method

(b) Turn OFF controlled lighting and measure daylight illuminance within zones illuminated by controlled luminaires.

(c) Identify the Reference Location; this is the task location with lowest daylight illuminance in the zone illuminated by controlled luminaires. This location will be used for illuminance measurements in subsequent tests.

Distance Method

Identify the task location within the zone illuminated by controlled luminaires that is farthest away from daylight sources. This is the Reference Location and will be used for illuminance measurements in subsequent tests.

(d) No daylight test. Simulate or provide conditions without daylight. Verify and document the following:

1. Automatic daylight control system provides appropriate control so that electric lighting system is providing full light output unless otherwise specified by design documents.
2. Document the reference illuminance, which is the electric lighting illuminance level at the reference location identified in Step 1.
3. Light output is stable with no discernable flicker.

(e) Full daylight test. Simulate or provide bright conditions. Verify and document the following:

1. Lighting power reduction is at least 65 percent under fully dimmed conditions and light output is stable with no discernable flicker.
2. Only luminaires in daylit zones are affected by daylight control. . If the daylighting controls control lighting outside of the daylight zones including those behind obstructions as described in Section 130.1(d)1, the control system is not compliant

(f) Partial daylight test. Simulate or provide daylight conditions where illuminance (fc) from daylight only at the Reference Location is between 60 and 95 percent of Reference Illuminance (fc) documented in Step 2. Verify and document the following:

1. Measure that the combined illuminance of daylight and controlled electric lighting (fc) at the reference location is no less than the electric lighting illuminance (fc) at this location during the no daylight test documented in Step 2.
2. Measure that the combined illuminance of daylight and controlled electric lighting (fc) at the Reference Location is no greater than 150 percent of the reference illuminance (fc) documented in Step 2.
3. Light output is stable with no discernable flicker.

NA 7.6.1.2.2 Stepped Switching or Stepped Dimming Control Systems

This requirement is for systems that have no more than 10 discrete steps of control of light output.

If the control has 3 steps of control or less, conduct the following tests for all steps of control. If the control has more than 3 steps of control, testing 3 steps of control is sufficient for showing compliance.

(a) Identify the minimum daylighting location(s) in the controlled zone. (Reference Location). This can be identified using either the illuminance method or the distance method.

Illuminance Method

1. Turn OFF controlled lighting and measure daylight illuminances within a zone illuminated by controlled luminaires.
2. Identify the reference location; this is the task location with lowest daylight illuminance in the zone illuminated by controlled luminaires. This location will be used for illuminance measurements in subsequent tests.

3. Turn controlled lights back ON.

Distance Method

1. Identify the task location within the zone illuminated by controlled luminaires that is farthest away from daylight sources. This is the reference location and will be used for illuminance measurements in subsequent tests.

(b) No daylight test. Simulate or provide conditions without daylight for a stepped switching or stepped dimming control system. Verify and document the following:

1. If the control is manually adjusted (not self commissioning), make note of the time delay and override time delay or set time delay to minimum setting. This condition shall be in effect through step 4.
2. Automatic daylight control system turns ON all stages of controlled lights unless it is documented that multi-level luminaires have been "tuned" to less than full output and providing design illuminance (fc) levels
3. Stepped dimming control system provides reduced flicker over the entire operating range per §110.9.
4. Document the reference illuminance which is the electric lighting illuminance level measured at the reference location identified in Step 1.

(c) Full daylight test. Simulate or provide bright conditions. Verify and document the following:

1. Lighting power reduction of controlled luminaires is at least 65 percent
2. Only luminaires in daylit zones (toplit zone, primary sidelit zone and secondary sidelit zone) are affected by daylight control. If the daylighting controls control lighting outside of the daylight zones including those behind obstructions as described in Section 130.1(d)1, the control system is not compliant.

(d) Partial daylight test. For each control stage that is tested in this step, the control stages with lower setpoints than the stage tested are left ON and those stages of control with higher setpoints are dimmed or controlled off. Simulate or provide conditions so that each control stage turns on and off or dims. Verify and document the following for each control stage:

1. Document the total daylight and electric lighting illuminance level measured at its reference location just after the stage of control dims or shuts off a stage of lighting:
   A. The total measured illumination shall be no less than the reference illuminance measured at this location during the no daylight test documented in Step 2.
   B. The total measured illumination shall be no greater than 150 percent of the reference illuminance.
2. The control stage shall not cycle on and off or cycle between dim and undimmed while daylight illuminance remains constant.
3. Only luminaires in daylit zones (toplit zone, primary sidelit zone, and secondary sidelit zone) are affected by daylight control.

(e) Verify time delay.

1. Verify that time delay automatically resets to normal mode within 60 minutes.
2. Set normal mode time delay to at least three minutes.
3. Confirm that there is a time delay of at least 3 minutes between the time when illuminance exceeds the setpoint for a given dimming stage and when the control dims or switches off the controlled lights.

NA7.6.2 Acceptance tests for Shut-off Controls complying with Section 130.1(c)

NA7.6.2.1 Construction Inspection and Acceptance Tests

Verify that the shut-off control qualifies as one of the required control types, is installed, and is fully functional in accordance with each applicable requirement in Section 130.1(c), or that the application meets one of the exceptions. List each specific exception claimed, from Section 130.1(c).

NA7.6.2.2 Occupancy Sensing Lighting Control Construction Inspection

Prior to Functional testing, verify and document the following:

(a) Occupancy sensor has been located to minimize false signals:

(b) No closer than four (4) feet from a HVAC diffuser.

(c) PIR sensor pattern does not enter into adjacent zones.

(d) Occupancy sensors do not encounter any obstructions that could adversely affect desired performance.

(e) Ultrasonic occupancy sensors do not emit audible sound.

NA7.6.2.3 Occupancy Sensing Lighting Control Functional testing

For buildings with up to seven (7) occupancy sensors, all occupancy sensors shall be tested. For buildings with more than seven (7) occupancy sensors, sampling may be done on spaces with similar sensors and space geometries. If the first occupancy sensor in the sample group passes the acceptance test, the remaining building spaces in the sample group also pass. If the first occupancy sensor in the sample group fails the acceptance test the rest of the occupancy sensors in that group must be tested. If any tested occupancy sensor fails it shall be repaired, replaced or adjusted until it passes the test.

For each sensor to be tested do the following:

(a) For a representative sample of building spaces, simulate an unoccupied condition. Verify and document the following:

1. Lights controlled by occupancy sensors turn off within a maximum of 30 minutes from the start of an unoccupied condition per §119(d).
2. The occupant sensor does not trigger a false “on” from movement in an area adjacent to the space containing the controlled luminaires or from HVAC operation.
3. Signal sensitivity is adequate to achieve desired control.

(b) For a representative sample of building spaces, simulate an occupied condition. Verify and document the following:

1. Status indicator or annunciator operates correctly.
2. Lights controlled by occupancy sensors turn on immediately upon an occupied condition, OR sensor indicates space is “occupied” and lights are turned on manually (automatic OFF and manual ON control strategy).

NA7.6.2.4 Automatic Time Switch Lighting Control Construction Inspection

Prior to Functional testing, verify and document the following:

(a) Automatic time switch control is programmed with acceptable weekday, weekend, and holiday (if applicable) schedules.

(b) Document for the owner automatic time switch programming including weekday, weekend, holiday schedules as well as all set-up and preference program settings.

(c) Verify the correct time and date is properly set in the time switch.

(d) Verify the battery back-up (if applicable) is installed and energized.

(e) Override time limit is set to no more than 2 hours.

(f) Override switches remote from area with controlled luminaires have annunciator lights.

NA7.6.2.5 Automatic Time Switch Lighting Control Functional testing

(a) Simulate occupied condition. Verify and document the following:

1. All lights can be turned on and off by their respective area control switch.
2. Verify the switch only operates lighting in the enclosed space (ceiling-height partitioned area) in which the switch is located.

(b) Simulate unoccupied condition. Verify and document the following:

1. All non-exempt lighting turn off per §131(d)1.
2. Manual override switch allows only the lights in the enclosed space (ceiling height partitioned) where the override switch is located to turn on or remain on until the next scheduled shut off occurs.

NA7.6.3 Acceptance tests for Demand Responsive Controls in accordance with Section 130.1(e).

NA7.6.3.1 Construction Inspection

Prior to Functional testing, verify and document the following:

(a) That the demand responsive control is capable of receiving a demand response signal directly or indirectly through another device and that it complies with the requirements in Section 130.5(e).

(b) If the demand response signal is received from another device (such as an EMCS), that system must itself be capable of receiving a demand response signal from a utility meter or other external source.

NA7.6.3.2 Functional testing of Demand Responsive Lighting Controls

For buildings with up to seven (7) enclosed spaces requiring demand responsive lighting controls, all spaces shall be tested. For buildings with more than seven (7) enclosed spaces requiring demand responsive lighting controls, sampling may be done on additional spaces with similar lighting systems. If the first enclosed space with a demand responsive lighting control in the sample group passes the acceptance test, the remaining building spaces in the sample group also pass. If the first enclosed space with a demand responsive lighting control in the sample group fails the acceptance test the rest of the enclosed spaces in that group must be tested. If any tested demand responsive lighting control system fails it shall be repaired, replaced or adjusted until it passes the test.

Test the reduction in lighting power due to the demand responsive lighting control using one or the following two methods.

Method 1: Illuminance Measurement. Measure the reduction in illuminance in enclosed spaces required to meet Section 131(b), as follows:

(a) In each space, select one location for illuminance measurement. The chosen location must not be in a primary skylit or sidelit area. When placed at the location, the illuminance meter must not have a direct view of a window or skylight. If this is not possible, perform the test at a time and location at which daylight illuminance provides less than half of the design illuminance. Mark each location to ensure that the illuminance meter can be accurately located.

(b) Full output test

1. Using the manual switches/dimmers in each space, set the lighting system to full output. Note that the lighting in areas with photocontrols or occupancy/vacancy sensors may be at less than full output, or may be off.
2. Take one illuminance measurement at each location, using an illuminance meter.
3. Simulate a demand response condition using the demand responsive control.
4. Take one illuminance measurement at each location with the electric lighting system in the demand response condition.
5. Calculate the area-weighted average reduction in illuminance in the demand response condition, compared with the full output condition. The area-weighted reduction must be at least 15% but must not reduce the combined illuminance from electric light and daylight to less than 50% of the design illuminance in any individual space.

(c) Minimum output test

1. Using the manual switches/dimmers in each space, set the lighting system to minimum output (but not off). Note that the lighting in areas with photocontrols or occupancy/vacancy sensors may be at more than minimum output, or may be off.
2. Take one illuminance measurement at each location, using an illuminance meter.
3. Simulate a demand response condition using the demand responsive control.
4. Take one illuminance measurement at each location with the electric lighting system in the demand response condition.
5. In each space, the illuminance in the demand response condition must not be less than the illuminance in the minimum output condition or 50% of the design illuminance, whichever is less.

   EXCEPTION: In daylit spaces, the illuminance in the demand response condition may reduce below the minimum output condition, but in the demand response condition the combined illuminance from daylight and electric light must be at least 50% of the design illuminance.

Method 2: Current measurement. Measure the reduction in electrical current in spaces required to meet Section 131(b), as follows:

(a) At the lighting circuit panel, select at least one lighting circuit that serves spaces required to meet Section 131(b).

(b) Full output test

1. Using the manual switches/dimmers in each space, set the lighting system to full output. Note that the lighting in areas with photocontrols or occupancy/vacancy sensors may be at less than full output, or may be off.
2. Take one electric current measurement for each selected circuit.
3. Simulate a demand response condition using the demand responsive control.
4. Take one illuminance measurement at each location with the electric lighting system in the demand response condition.
5. Add together all the circuit currents, and calculate the reduction in current in the demand response condition, compared with the full output condition. The combined reduction must be at least 15% but must not reduce the output of any individual circuit by more than 50%.

(c) Minimum output test

1. Using the manual switches/dimmers in each space, set the lighting system to minimum output (but not off). Note that the lighting in areas with photocontrols or occupancy/vacancy sensors may be at more than minimum output, or may be off.

2. Take one electric current measurement for each selected circuit.
3. Simulate a demand response condition using the demand responsive control.
4. Take one electric current measurement for each selected circuit with the electric lighting system in the demand response condition.
5. In each space, the electric current in the demand response condition must not be less than 50% or the electric current in the minimum output condition, whichever is less.

   EXCEPTION: Circuits that supply power to the daylit portion of enclosed spaces as long as lighting in non-daylit portions of the enclosed space.

NA7.7 Lighting Control Installation Requirements

Lighting control installation inspection shall be performed on:

Lighting control systems installed to comply with Section 110.9(b).

(a) Energy Management Control System installed to comply with Section 130.5(f)1.

(b) All line-voltage track lighting integral current limiters in accordance with Section 110.9 and Section 130.0.

(c) All dedicated line-voltage track lighting supplementary overcurrent protection panels in accordance with Section 110.9 and Section 130.0.

(d) Interlocked lighting systems serving an area in accordance with Section 140.6(a)1.

(e) Lighting controls installed to earn a Power Adjustment Factor (PAF) in accordance with Section 140.6(a)2.

(f) Lighting for a Videoconferencing Studio in Accordance with Exception to Section 140.6(c)2Gvii.

NA7.7.1 Lighting Control Systems Installed to Comply with Section 110.9(b)

NA7.7.1.1 Installation Inspection

If a lighting control required by Title 24, Part 6 is a field assembled system consisting of two or more components, verify the system components meet all of the requirements for each lighting control type, in accordance with Section 110.9, On the approved installation compliance form, identify, list, and verify each type of lighting control system as follows:

(a) Separately identify and list each type of lighting control system. When there are identical lighting control systems in a single building, identical lighting control system may be listed together.

(b) Identify and list all requirements for the type of self-contained lighting control device for which the lighting control system is installed to function as, in accordance with Section 110.9 and in accordance with the Title 20 Appliance Efficiency Regulations.

(c) Verify the lighting control system complies with all of the applicable requirement as listed.

(d) If the lighting control system does not meet all applicable requirements, the installation fails.

NA7.7.2 Energy Management Control System (EMCS) Installed in Accordance with Section 130.1(f)

NA7.7.2.1 Installation Requirements

(a) The EMCS shall be separately tested for each respective lighting control system for which it is installed to function as.

(b) List and verify functional compliance with all applicable requirements in accordance with Sections 130.1 through 130.5.

(c) If applicable, list and verify functional compliance with all applicable requirements for all applications for which the EMCS is installed to function as, in accordance with Section 140.6.

(d) If applicable, list and verify functional compliance with all applicable requirements for all applications for which the EMCS is installed to function as, in accordance with Section 140.7.

(e) If applicable, list and verify functional compliance with all applicable requirements for all applications for which the EMCS is installed to function as, in accordance with Section 150(k).

NA7.7.3 Track Lighting Integral Current Limiter

NA7.7.3.1 Certification requirements

(a) Verify that the track lighting integral current limiter is certified to the Energy Commission in accordance with Section 110.9 by checking the Energy Commission database. If the track current limiter has not been certified to the Energy Commission, this method for determining installed lighting power shall not be used for compliance with Title 24, Part 6, and the installation test shall be terminated.

NA7.7.3.2 Installation Inspection

Verify and document the following on the approved installation compliance form:

(a) The track current limiter is used exclusively on the same manufacturer's track for which it is designed.

(b) The track current limiter is designed and installed so that the track current limiter housing is permanently attached to the track so that the system will be irreparably damaged if the integral track current limiter housing were to be removed after installation into the track. Methods of attachment may include but are not limited to one-way barbs, rivets, and one-way screws.

(c) The track current limiter has identical volt-ampere (VA) rating of the track current limiter, as installed and rated for compliance with Title 24, Part 6, clearly marked as follows:

1. So that it is visible for the building officials' field inspection without opening cover-plates, fixtures, or panels.
2. Permanently marked on the circuit breaker.
3. On a factory-printed label that is permanently affixed to a non-removable base-plate inside the wiring compartment.

(d) The track current limiter employs tamper resistant fasteners for the cover to the wiring compartment.

(e) The track current limiter has a conspicuous factory installed label permanently affixed to the inside of the wiring compartment warning against removing, tampering with, rewiring, or bypassing the device.

(f) Each electrical panel from which track lighting integral current limiters are connected has a factory printed label permanently affixed and prominently located, with the following information: "NOTICE: Current limiting devices installed in track lighting integral current limiters connected to this panel shall only be replaced with the same or lower amperage. Adding track or replacement of existing current limiters with higher continuous ampere rating will void the track lighting integral current limiter certification, and will require re-submittal and re-certification of California Title 24, Part 6 compliance documentation."

(g) For installations where a total of five or less track current limiters are installed in a single building, all integral track current limiters shall be inspected. For installations where a total of more than five track current limiters are installed in a single building, no less than five track current limiters shall be inspected, up to five inspections for each 20 installed track current limiters.

(h) If any of the above requirements fail, the track current limiter fails the installation test, and this method for determining installed lighting power shall not be used for compliance with Title 24.

NA7.7.4 Line-Voltage Track Lighting Supplementary Overcurrent Protection Panel

NA7.7.4.1 Construction Inspection

Verify and document the following on the approved compliance form:

(a) The supplementary overcurrent protection panel is Listed, as defined in Section 100.1.

(b) The supplementary overcurrent protection panel is used only for line voltage track lighting. No other lighting or building power is connected to a track-lighting supplementary overcurrent protection panel.

(c) No overcurrent protection panel has been used to determine installed wattage for any lighting system other than line-voltage track lighting.

(d) The supplementary overcurrent protection panel is installed in an electrical equipment room, or permanently installed adjacent to the lighting panel board providing supplementary overcurrent protection for the track lighting circuits served by the supplementary over current protection pane.

(e) There is a prominently labeled permanently attached to the panel by the manufacturer with the following information: "NOTICE: This Panel for Track Lighting Energy Code Compliance Only. The overcurrent protection devices in this panel shall only be replaced with the same or lower amperage. No other overcurrent protective device shall be added to this panel. Adding to, or replacement of existing overcurrent protective device(s) with higher continuous ampere rating, will void the panel listing and require re-submittal and re-certification of California Title 24, Part 6 compliance documentation."

(f) If any of the above requirements fail, the supplementary overcurrent protection panel fails the Installation test, and this method for determining installed lighting power shall not be used for compliance with Title 24.

NA7.7.5 Interlocked Lighting Systems Serving an Area in Accordance with Section 140.6(a)1

NA7.7.5.1 Installation Inspection

Verify and document the following:

(a) The space qualifies only as one or more the following types: Auditorium, convention center, conference room, multipurpose room, or theater, in accordance with the definitions of those space types in Section 100.1,

(b) There are no more than two interlocked lighting systems serving the space.

(c) The two lighting systems are interlocked with a non-programmable double throw switch to prevent simultaneous operation, in accordance with Section 140.6(a).

(d) If all of the above in not true, the installation fails, and all connected lighting in the space shall be counted as part of the total installed lighting power.

NA7.7.6 Lighting Controls Installed to Earn a Power Adjustment Factor (PAF) in Accordance with Section 140.6(a)2

NA7.7.6.1 Construction Inspection

Verify and document the following:

(a) Separately list all requirements for each PAF that is claimed in accordance with Sections 110.9, and 140.6(a)2, and Table 140.6-A.

(b) Verify the installation complies with all applicable requirements in accordance with Sections 110.9, and 140.6(a)2, and Table 140.6-A.

(c) If all of the above in not true for a specific PAF, the installation fails, and that specific PAF cannot be used.

NA7.7.7 Lighting for a Videoconferencing Studio in Accordance with Exception to Section 140.6(a)3T

NA7.7.7.1 Installation Inspection

Verify and document the following:

(a) The videoconferencing studio is using only the Area Category Method for compliance. The extra lighting allowance shall not be taken when using the Complete Building Method or Tailored Method of compliance.

(b) The Videoconferencing Studio is a room with permanently installed videoconferencing cameras, audio equipment, and playback equipment for both audio-based and video-based two-way communication between local and remote sites.

(c) General lighting is switched in accordance with Table 130.1-A.

(d) Wall wash lighting is separately switched from the general lighting system.

(e) All of the lighting is controlled by a multiscene programmable control system (scene preset control system).

(f) If all of the above is not true, the installation fails, and the extra wattage for videoconferencing studio lighting cannot be used.

NA7.8 Outdoor Lighting Controls Installed to Comply with Section 130.2(c)

NA7.8.1.1 Construction inspection and installation requirements

Verify that outdoor lighting controls qualify as one of the required control types, are installed, and are fully functional in accordance with each applicable requirement in Section 130.2(c), or that the application meets one of the exceptions. List each specific exception claimed, from Section 130.2(c).

NA7.8.1.2 Outdoor Motion Sensor Acceptance

NA7.8.1.3 Construction Inspection

Prior to Functional testing, verify and document the following:

(a) Motion sensor has been located to minimize false signals.

(b) Sensor is not triggered by motion outside of adjacent area.

(c) Desired motion sensor coverage is not blocked by obstructions that could adversely affect performance.

NA7.8.1.4 Functional testing

Step 1: Simulate motion in area under lights controlled by the motion sensor. Verify and document the following:

(a) Status indicator operates correctly.

(b) Lights controlled by motion sensors turn on immediately upon entry into the area lit by the controlled lights near the motion sensor.

(c) Signal sensitivity is adequate to achieve desired control.

Step 2: Simulate no motion in area with lighting controlled by the.

Verify and document the following:

(a) Lights controlled by motion sensors reduce light output within a maximum of 30 minutes from the start of an unoccupied condition per §110.9(d).

(b) The occupant sensor does not trigger a false “on” from movement outside of the controlled area.

(c) Signal sensitivity is adequate to achieve desired control.

NA7.8.2 Outdoor Lighting Shut-off Controls

NA7.8.2.1 Construction Inspection

Prior to Functional testing, verify and document the following:

(a) Controls to turn off lights during daytime hours are installed.

(b) Astronomical and standard time switch control is programmed with acceptable weekday, weekend, and holiday (if applicable) schedules.

(c) Demonstrate and document for the owner time switch programming including weekday, weekend, holiday schedules as well as all set-up and preference program settings.

NA7.9 Lighting systems that meet the criteria of §130.2(c)Sign Lighting Acceptance Tests

Reserved For Future Use

NA7.10 Refrigerated Warehouse Refrigeration System Acceptance Tests

The measurement devices used to verify the refrigerated warehouse controls shall be calibrated once every two years using a NIST traceable reference. The calibrated measurement devices to be used in these acceptance tests are called the "standard" and shall have the following measurement tolerances: The temperature measurement devices shall be calibrated to +/- 0.7°F between -30°F and 200°F. The pressure measurement devices shall be calibrated to +/- 2.5 psi between 0 and 500 psig. The relative humidity (RH) measurement devices shall be calibrated to +/- 1% between 5% and 90% RH.

NA7.10.1 Electric Resistance Underslab Heating System

NA7.10.1.1 Construction Inspection

Prior to functional testing, verify and document the following for all electric resistance underslab heating systems:

(a) Verify that summer on-peak period is programmed into all underslab heater controls to meet the requirements of Section 120.6(a)2.

NA7.10.1.2 Functional Testing

Step 1: Using the control system, lower slab temperature setpoint. Verify and document the following using an electrical test meter:

(a) The underslab electric resistance heater is off.

Step 2: Using the control system, raise the slab temperature setpoint. Verify and document the following using an electrical test meter:

(b) The underslab electric resistance heater is on.

Step 3: Using the control system, change the control system's time and date corresponding to the local utility's summer on-peak period. If control system only accounts for time, set system time corresponding to the local utility's summer on-peak period. Verify and document the following using an electrical test meter:

(c) The underslab electric resistance heater is off.

Step 4: Restore system to correct schedule and control setpoints.

NA7.10.2 Evaporators and Evaporator Fan Motor Variable Speed Control

NA7.10.2.1 Construction Inspection

Prior to functional testing, document the following on all evaporators:

(a) All refrigerated space temperature sensors used for control are verified to read accurately (or provide an appropriate offset) using a temperature standard.

(b) All refrigerated space humidity sensors used for control are verified to read accurately (or provide an appropriate offset) using a humidity standard.

(c) All refrigerated space temperature and humidity sensors are verified to be mounted in a location away from direct evaporator discharge air draft.

(d) Verify that all fans motors are operational and rotating in the correct direction.

(e) Verify that fan speed control is operational and connected to evaporator fan motors.

(f) Verify that all speed controls are in "auto" mode.

NA7.10.2.2 Functional Testing

Conduct and document the following functional tests on all evaporators.

Step 1: Measure current space temperature or humidity. Program this temperature or humidity as the test temperature or humidity setpoint into the control system for the functional test steps. Allow 5 minutes for system to normalize.

Step 2: Using the control system, lower test temperature or humidity setpoint in 1 degree or 1% RH increments below any control dead band range until:

(a) Evaporator fan controls modulate to increase fan motor speed.

(b) Evaporator fan motor speed increases in response to controls.

(c) Verify and document the above.

Step 3: Using the control system, raise the test temperature or humidity setpoint in 1 degree or 1% RH increments above any control dead band range until fans go to minimum speed. Verify and document the following:

(d) Evaporator fan controls modulate to decrease fan motor speed.

(e) Evaporator fan motor speed decreases in response to controls.

(f) Minimum fan motor control speed (rpm or percent of full speed).

Step 4: Restore control system to correct control setpoints.

NA7.10.3 Condensers and Condenser Fan Motor Variable Speed Control

NA7.10.3.1 Evaporative Condensers and Condenser Fan Motor Variable Speed Control

NA7.10.3.1.1 Construction Inspection

Prior to functional testing, document the following:

(a) Verify the minimum condensing temperature control setpoint is at or below 70°F.

(b) Verify the master system controller saturated condensing temperature input is the temperature equivalent reading of the condenser pressure sensor.

(c) Verify all drain leg pressure regulator valves are set below the minimum condensing temperature/pressure setpoint.

(d) Verify all receiver pressurization valves, such as the outlet pressure regulator (OPR), are set lower than the drain leg pressure regulator valve setting.

(e) Verify all condenser inlet and outlet pressure sensors read accurately (or provide an appropriate offset) using a pressure standard.

(f) Verify all ambient dry bulb temperature sensors used by controller read accurately (or provide an appropriate offset) using a temperature standard.

(g) Verify all relative humidity sensor used by controller read accurately (or provide an appropriate offset) using RH standard.

(h) Verify all temperature sensors used by the controller are mounted in a location that is not exposed to direct sunlight.

(i) Verify that all sensor readings used by the condenser controller convert or calculate to the correct conversion units at the controller (e.g., saturated pressure reading is correctly converted to appropriate saturated temperature; dry bulb and relative humidity sensor readings are correctly converted to wet bulb temperature, etc.)

(j) Verify that all fan motors are operational and rotating in the correct direction.

(k) Verify that all condenser fan speed controls are operational and connected to condenser fan motors to operate in unison the fans serving a common condenser loop.

(l) Verify that all speed controls are in “auto” mode.

NA7.10.3.1.2 Functional Testing

Note: The system cooling load must be sufficiently high to run the test. Artificially increase evaporator loads or decrease compressor capacity (manually turn off compressors, etc.) as may be required to perform the Functional Testing.

Step 1: Override any heat reclaim, floating suction pressure, floating head pressure and defrost functionality before performing functional tests.

Step 2:

(a) Document current outdoor ambient air dry bulb and wet bulb temperatures, relative humidity and refrigeration system condensing temperature/condensing pressure readings from the control system.

(b) Calculate and document the temperature difference (TD), defined as the difference between the wet bulb temperature and the refrigeration system saturated condensing temperature (SCT).

(c) Document current head pressure control setpoint.

Step 3: Using the desired condenser fan motor cycling or head pressure control strategy, program into the control system a setpoint equal to the reading or calculation obtained in Step 2. This will be referred to as the “test setpoint.” Allow 5 minutes for condenser fan speed to normalize.

Step 4: Using the control system, raise the test setpoint in 1 degree (or 3 psi) increments until the condenser fan control modulates to minimum fan motor speed. Verify and document the following:

(d) Fan motor speed decreases.

(e) All condenser fan motors serving common condenser loop decrease speed in unison in response to controller output.

(f) Minimum fan motor control speed (rpm or percent of full speed).

(g) If the refrigeration system is already operating at minimum saturated condensing temperature/head pressure, reverse Steps 4 and 5.

Step 5: Using the control system, lower the test setpoint in 1 degree (or 3 psi) increments until the condenser fan control modulates to increase fan motor speed. Verify and document the following:

(h) Fan motor speed increases.

(i) All condenser fan motors serving common condenser loop increase speed in unison in response to controller output.

Step 6: Document the current minimum condensing temperature setpoint. Using the control system, change the minimum condensing temperature setpoint to a value greater than the current operating condensing temperature. Verify and document the following:

(j) Condenser fan controls modulate to decrease capacity.

(k) All condenser fans serving common condenser loop modulate in unison.

(l) Condenser fan controls stabilize within a 5 minute period.

Step 7: Using the control system, reset the system head pressure controls, fan motor controls and minimum condensing temperature control setpoint to original settings documented in Steps 3 and 6.

Step 8: Restore any heat reclaim, floating suction pressure, floating head pressure and defrost functionality. Reset the minimum condensing temperature setpoint to the value documented in Step #6.

NA7.10.3.2 Air-Cooled Condensers and Condenser Fan Motor Variable Speed Control

Conduct and document the following functional tests on all air-cooled condensers.

NA7.10.3.2.1 Construction Inspection

Prior to functional testing, document the following:

(a) Verify that the minimum condensing temperature control setpoint is at or below 70°F.

(b) Verify that the master system controller saturated condensing temperature input is the temperature equivalent reading of the condenser pressure sensor.

(c) Verify all drain leg pressure regulator valves are set below the minimum condensing temperature/pressure setpoint.

(d) Verify all receiver pressurization valves, such as the outlet pressure regulator (OPR), are set lower than the drain leg pressure regulator valve setting.

(e) Verify all condenser inlet and outlet pressure sensors read accurately (or provide an appropriate offset) using a pressure standard.

(f) Verify all ambient dry bulb temperature sensors used by controller read accurately (or provide an appropriate offset) using temperature standard.

(g) Verify all temperature sensors used by the controller are mounted in a location that is not exposed to direct sunlight.

(h) Verify that all sensor readings used by the condenser controller convert or calculate to the correct conversion units at the controller (e.g., saturated pressure reading is correctly converted to appropriate saturated temperature, etc.)

(i) Verify that all fan motors are operational and rotating in the correct direction.

(j) Verify that all condenser fan speed controls are operational and connected to condenser fan motors to operate in unison the fans serving a common condenser loop.

(k) Verify that all speed controls are in “auto” mode.

NA7.10.3.2.2 Functional Testing

Note: The system cooling load must be sufficiently high to run the test. Artificially increase evaporator loads or decrease compressor capacity (manually turn off compressors, etc.) as may be required to perform the Functional Testing.

Step 1: Override any heat reclaim, floating suction pressure, floating head pressure and defrost functionality before performing functional tests.

(a) Papachristou Papachristou Document current outdoor ambient air dry bulb temperature and refrigeration system condensing temperature/condensing pressure readings from the control system.

(b) Calculate and document the temperature difference (TD), defined as the difference between the dry bulb temperature and the refrigeration system saturated condensing temperature (SCT).

(c) Document current head pressure control setpoint.

Step 3: Using the desired condenser fan motor cycling or head pressure control strategy, program into the control system a setpoint equal to the reading or calculation obtained in Step 2.

(d) This will be referred to as the “test setpoint.” Allow 5 minutes for condenser fan speed to normalize.

Step 4: Using the control system, raise the test setpoint in 1 degree (or 3 psi) increments until the condenser fan control modulates to minimum fan motor speed. Verify and document the following:

(e) Fan motor speed decreases.

(f) All condenser fan motors serving common condenser loop decrease speed in unison in response to controller output.

(g) Minimum fan motor control speed (rpm or percent of full speed).

(h) If the refrigeration system is already operating at minimum saturated condensing temperature/head pressure, reverse Steps 4 and 5.

Step 5: Using the control system, lower the test setpoint in 1 degree (or 3 psi) increments until the condenser fan control modulates to increase fan motor speed. Verify and document the following:

(i) Fan motor speed increases.

(j) All condenser fan motors serving common condenser loop increase speed in unison in response to controller output.

Step 6: Document current minimum condensing temperature setpoint. Using the control system change the minimum condensing temperature setpoint to a value greater than the current operating condensing temperature. Verify and document the following:

(k) Condenser fan controls modulate to decrease capacity.

(l) All condenser fans serving common condenser loop modulate in unison.

(m) Condenser fan controls stabilize within a 5 minute period.

Step 7: Using the control system, reset the system head pressure controls, fan motor controls and minimum condensing temperature control setpoint to original settings documented in Steps 3 and 6.

Step 8: Restore any heat reclaim, floating suction pressure, floating head pressure and defrost functionality. Reset the minimum condensing temperature setpoint to the value documented in Step 6.

NA7.10.4 Variable Speed Screw Compressors

Conduct and document the following functional tests on all variable-speed screw compressors.

NA7.10.4.1 Construction Inspection

Prior to functional testing, document the following:

(a) Verify all single open-drive screw compressors dedicated to a suction group have variable speed control.

(b) Verify all compressor suction and discharge pressure sensors read accurately (or provide an appropriate offset) using a standard.

(c) Verify all input or control temperature sensors used by controller read accurately (or provide an appropriate offset) using temperature standard.

(d) Verify that all sensor readings used by the compressor controller convert or calculate to the correct conversion units at the controller (e.g., saturated pressure reading is correctly converted to appropriate saturated temperature, etc.).

(e) Verify that all compressor speed controls are operational and connected to compressor motors.

(f) Verify that all speed controls are in “auto” mode.

(g) Verify that compressor panel control readings for “RPMs,” “% speed,” “kW”, and “amps” match the readings from the PLC or other control systems.

(h) Verify that compressor nameplate data is correctly entered into the PLC or other control system.

NA7.10.4.2 Functional Testing

Note: The system cooling load must be sufficiently high to run the test. Artificially increase or decrease evaporator loads (add or shut off zone loads, change setpoints, etc.) as may be required to perform the Functional Testing.

Step 1: Override any heat reclaim, floating suction pressure, floating head pressure and defrost functionality before performing functional tests.

Step 2: Measure and document the current compressor operating suction pressure and saturated suction temperature.

Step 3: Document the suction pressure/saturated suction temperature setpoint. Program into the control system a target setpoint equal to the current operating condition measured in Step #2. Allow 5 minutes for system to normalize. This will be referred to as the “test suction pressure/saturated suction temperature setpoint.”

Step 4: Using the control system, raise the test suction setpoint in 1 psi increments until the compressor controller modulates to decrease compressor speed. Verify and document the following:

(a) Compressor speed decreases.

(b) Compressor speed continues to decrease to minimum speed.

(c) Any slide valve or other unloading means does not unload until after the compressor has reached its minimum speed (RPM).

Step 5: Using the control system, lower the test suction setpoint in 1 psi increments until the compressor controller modulates to increase compressor speed. Verify and document the following:

(d) Any slide valve or other unloading means first goes to 100 percent before compressor speed increases from minimum.

(e) Compressor begins to increase speed.

(f) Compressor speed continues to increase to 100 percent.

Step 6: Using the control system, program the suction target setpoints back to original settings as documented in Step 3.

Step 7: Restore any heat reclaim, floating suction pressure, floating head pressure and defrost functionality.

NA7.11 Commercial Kitchen Exhaust System Acceptance Tests

NA7.11.1 Kitchen Exhaust Systems with Type I Hood Systems

The following acceptance tests apply to commercial kitchen exhaust systems with Type I exhaust hoods. All Type I exhaust hoods used in commercial kitchens shall be tested.

NA7.11.1.1 Construction Inspection

Step 1: Verify exhaust and replacement air systems are installed, power is installed and control systems such as demand control ventilation are calibrated.

Step 2: For kitchen/dining facilities having total Type 1 and Type II kitchen hood exhaust airflow rates greater than 5,000 cfm, calculate the maximum allowable exhaust rate for each Type 1 hood per Table 140.9-A.

NA7.11.1.2 Functional Testing at Full Load Conditions

The following acceptance test applies to systems with and without demand control ventilation exhaust systems. These tests shall be conducted at full load conditions.

Step 1: Operate all sources of outdoor air providing replacement air for the hoods.

Step 2: Operate all sources of recirculated air providing conditioning for the space in which the hoods are located.

Step 3: Operate all appliances under the hoods at operating temperatures.

Step 4: Verify that the thermal plume and smoke is completely captured and contained within each hood at full load conditions by observing smoke or steam produced by actual cooking operation and/or by visually seeding the thermal plume using devices such as smoke candles or smoke puffers. Smoke bombs shall not be used (note: smoke bombs typically create a large volume of effluent from a point source and do not necessarily confirm whether the cooking effluent is being captured). For some appliances (e.g., broilers, griddles, fryers), actual cooking at the normal production rate is a reliable method of generating smoke). Other appliances that typically generate hot moist air without smoke (e.g., ovens, steamers) need seeding of the thermal plume with artificial smoke to verify capture and containment.

Step 5: Verify that space pressurization is appropriate (e.g. kitchen is slightly negative relative to adjacent spaces and all doors open/close properly).

Step 6: Verify that each Type 1 hood has an exhaust rate that is below the maximum allowed.

Step 7: Make adjustments as necessary until full capture and containment and adequate space pressurization are achieved and maximum allowable exhaust rates are not exceeded. Adjustments may include:

(g) Adjust exhaust hood airflow rates

(a) Add hood side panels

(b) Add rear seal (back plate)

(c) Increase hood overhang by pushing equipment back

(d) Relocate supply outlets to improve the capture and containment performance

Step 8: Measure and record final exhaust airflow rate per Type 1 hood.

NA7.11.1.3 Functional Testing for Exhaust Systems with Demand Control Ventilation

The following additional acceptance test shall be performed on all exhaust hoods with demand control ventilation exhaust systems.

Step 1: Turn off all kitchen hoods, makeup air and transfer systems.

Step 2: Turn on one of the appliances on the line and bring to operating temperature. Confirm that:

(a) DCV system automatically switches from off to the minimum flow setpoint.

(b) The minimum flow setpoint does not exceed the larger of:

1. 50% of the design flow, or
2. The ventilation rate required per Section 120.1.

(c) The makeup air and transfer air system flow rates modulate as appropriate to match the exhaust rate.

(d) Appropriate space pressurization is maintained.

Step 3: Press the timed override button. Confirm that system ramps to full speed and back to minimum speed after override times out.

Step 4: Operate all appliances at typical conditions. Apply sample cooking products and/or utilize smoke puffers as appropriate to simulate full load conditions. Confirm that:

(e) DCV system automatically ramps to full speed.

(f) Hood maintains full capture and containment during ramping to and at full-speed.

(g) Appropriate space pressurization is maintained.

NA7.12 Parking Garage Ventilation System Acceptance Tests

NA7.12.1 Construction Inspection

Verify and document the following tests prior to the functional testing:

(a) Carbon monoxide control sensor is factory-calibrated per Section 120.6(c).

(b) The sensor is located in the highest expected concentration location in its zone per Section 120.6(c).

(c) Control setpoint is at or below the CO concentration permitted by Section 120.6(c).

NA7.12.2 Functional Testing

Conduct the following tests with garage ventilation system operating in occupied mode and with actual garage CO concentration well below setpoint.

Step 1: With all sensors active and all sensors reading below 25 ppm, observe that fans are at minimum speed and fan motor demand is no more than 30 percent of design wattage.

Step 2: Apply CO span gas with a concentration of 30 ppm, and a concentration accuracy of +/- 2%, one by one to 50% of the sensors but no more than 10 sensors per garage and to at least one sensor per proximity zone. For each sensor tested observe:

(a) CO reading is between 25 and 35 ppm.

(b) Ventilation system ramps to full speed when span gas is applied.

(c) Ventilation system ramps to minimum speed when span gas is removed.

Step 3: Temporarily override the programmed sensor calibration/replacement period to 5 minutes.

(d) Wait 5 minutes and observe that fans ramp to full speed and an alarm is received by the facility operators. Restore calibration/replacement period.

Step 4: Temporarily place the system in unoccupied mode and override the programmed unoccupied sensor alarm differential from 30% for 4 hours to 1% for 5 minutes. Wait 5 minutes and observe that fans ramp to full speed and an alarm is received by the facility operators. Restore programming.

Step 5: Temporarily override the programmed occupied sensor proximity zone alarm differential from 30% for 4 hours to 1% for 5 minutes. Wait 5 minutes and observe that fans ramp to full speed and an alarm is received by the facility operators. Restore programming.

NA7.13 Compressed Air System Acceptance Tests

NA7.13.1 Construction Inspection

Prior to functional testing, a compressed air system must verify and document the following:

(a) Size (hp), rated capacity (acfm), and control type of each air compressor

(b) Total online system capacity (the sum of the individual capacities)

(c) System operating pressure

(d) Compressor(s) designated as trim compressors

(e) Method for observing and recording the states of each compressor in the system, which shall include at least the following states:

Off

Unloaded

Partially loaded

Fully loaded

Short cycling (loading and unloading more often than once per minute)

Blow off (venting compressed air at the compressor itself)

NA7.13.2 Functional Testing

Step 1: Per the test methods outlined in the Construction Inspection, verify that these methods have been employed, so that the states of the compressors and the current air demand (as measured by a flow sensor or otherwise inferred by system measurements) can be observed and recorded during testing.

Step 2: Run the compressed air supply system steadily at as close to the expected operational load range as can be practically implemented, for a duration of at least 10 minutes.

Step 3: Observe and record the states of each compressor and the current air demand during the test.

Step 4: Confirm that the combinations of compressors states meet the following criteria:

(a) No compressor exhibits short-cycling (loading and unloading more often than once per minute).

(b) No compressor exhibits blowoff (venting compressed air at the compressor itself).

(c) For new systems, the trim compressors shall be the only compressors partially loaded, while the base compressors will either be fully loaded or off by the end of the test.

Nonresidential Appendix NA8

Appendix NA8 –Luminaire Power 1
NA8.1 Luminaire Power 1

Appendix NA8 –Luminaire Power

NA8.1 Luminaire Power

The following tables contain a limited list of lamp and ballast combinations. These tables provide an alternate voluntary option to the provision in Section 130(c) for determining luminaire power for any lamp and ballast combination specifically listed in Appendix NA8. This appendix is not intended to list all possible lamp and ballast combinations, and shall not to be used to determine luminaire power for any lighting system not specifically listed in this appendix.

Table NA8-1 – Fluorescent U-Tubes

Type	Lamps		Ballasts			System Watts
	Number	Designation	Number	Designation	Description	
2 ft. Fluorescent U-Tube T8	1	FB31T8/F32T8U	1	ELECT NO	Electronic Normal Output	39
	2	FB31T8/F32T8U	1	ELECT NO	Electronic Normal Output	62
	3	FB31T8/F32T8U	1	ELECT NO	Electronic Normal Output	92
	1	FB31T8/F32T8U	1	ELECT DIM	Electronic Dimming	33
	2	FB31T8/F32T8U	1	ELECT DIM	Electronic Dimming	64
	3	FB31T8/F32T8U	1	ELECT DIM	Electronic Dimming	93
	4	FB31T8/F32T8U	1	ELECT DIM	Electronic Dimming	116

NO = ballast factor 85 to 100%

Table NA8-2 – Fluorescent Linear Lamps T5

Type	Lamps		Ballasts			System Watts
	Number	Designation	Number	Designation	Description	
~23” Fluorescent Program Start T5 (14W)	1	F14T5	1	ELECT	Elect. Program Start BF=1	18
	2	F14T5	1	ELECT	Elect. Program Start BF=1	34
~34.5” Fluorescent Program Start T5 (21W)	1	F21T5	1	ELECT	Elect. Program Start BF=1	27
	2	F21T5	1	ELECT	Elect. Program Start BF=1	50
~46” Fluorescent Program Start T5 (28W)	1	F28T5	1	ELECT	Elect. Program Start BF=1	30
	2	F28T5	1	ELECT	Elect. Program Start BF=1	60
~58.5” Fluorescent Program Start T5 (35W)	1	F35T5	1	ELECT	Elect. Program Start BF=1	40
	2	F35T5	1	ELECT	Elect. Program Start BF=1	78
~23” Fluorescent Program Start T5 High Output (24W)	1	F24T5HO	1	ELECT	Elect. Program Start BF=1	29
	2	F24T5HO	1	ELECT	Elect. Program Start BF=1	55
~34.5” Fluorescent Program Start T5 High Output(39W)	1	F39T5	1	ELECT	Elect. Program Start BF=1	43
	2	F39T5	1	ELECT	Elect. Program Start BF=1	85
~46” Fluorescent Program Start T5 High Output (54W)	1	F54T5	1	ELECT	Elect. Program Start BF=1	62
	2	F54T5	1	ELECT	Elect. Program Start BF=1	121
	1	F54T5	1	ELECT DIM	Elect. Dimming	63
	2	F54T5	1	ELECT DIM	Elect. Dimming	125
~57.5” Fluorescent Program Start T5 High Output (80W)	1	ºF80T5	1	ELECT	Elect. Program Start BF=1	90

Table NA8-3 – Fluorescent Rapid Start T-8

Type	Lamps		Ballasts			System Watts
	Number	Designation	Number	Designation	Description	
2 foot Fluorescent Rapid Start T8 (17W) Electronic Ballasts	1	F17T8	1	ELECT NO	Electronic Normal Output	22
	2	F17T8	1	ELECT NO	Electronic Normal Output	33
	3	F17T8	1	ELECT NO	Electronic Normal Output	53
	3	F17T8	2	ELECT NO	Electronic Normal Output	55
	4	F17T8	1	ELECT NO	Electronic Normal Output	63
2 foot Fluorescent Rapid Start T8 (17W)	1	F17T8	1	ELECT DIM	Electronic Dimming	20
	2	F17T8	1	ELECT DIM	Electronic Dimming	37
	3	F17T8	1	ELECT DIM	Electronic Dimming	56
	4	F17T8	1	ELECT DIM	Electronic Dimming	69
3 foot Fluorescent Rapid Start T8 (25W) Electronic Ballasts	1	F25T8	1	ELECT NO	Electronic Normal Output	27
	2	F25T8	1	ELECT NO	Electronic Normal Output	48
	3	F25T8	1	ELECT NO	Electronic Normal Output	68
	4	F25T8	1	ELECT NO	Electronic Normal Output	89
	1	F25T8	1	ELECT RO	Electronic Reduced Output	24
	2	F25T8	1	ELECT RO	Electronic Reduced Output	41
	3	F25T8	1	ELECT RO	Electronic Reduced Output	59
	4	F25T8	1	ELECT RO	Electronic Reduced Output	76
	1	F25T8	1	ELECT HO	Electronic High Output	29
	2	F25T8	1	ELECT HO	Electronic High Output	51
	3	F25T8	1	ELECT HO	Electronic High Output	74
	1	F25T8	1	ELECT DIM	Electronic Dimming	25
	2	F25T8	1	ELECT DIM	Electronic Dimming	49
	3	F25T8	1	ELECT DIM	Electronic Dimming	76
	4	F25T8	1	ELECT DIM	Electronic Dimming	96

Table NA8-3 (continued) – Fluorescent Rapid Start T-8

4 foot Fluorescent Instant Start T8 (“Energy Saving” 30W)	1	F32T8/30ES	1	ELECT NO	Electronic Normal Output	29
	2	F32T8/30ES	1	ELECT NO	Electronic Normal Output	54
	3	F32T8/30ES	1	ELECT NO	Electronic Normal Output	79
	4	F32T8/30ES	1	ELECT NO	Electronic Normal Output	104
	1	F32T8/30ES	1	ELECT RO	Electronic Reduced Output	27
	2	F32T8/30ES	1	ELECT RO	Electronic Reduced Output	48
	3	F32T8/30ES	1	ELECT RO	Electronic Reduced Output	70
	4	F32T8/30ES	1	ELECT RO	Electronic Reduced Output	91
	1	F32T8/30ES	1	ELECT NO EE	EE Normal Output	33
	2	F32T8/30ES	1	ELECT NO EE	Energy efficiency Normal Output	52
	3	F32T8/30ES	1	ELECT NO EE	Energy efficiency Normal Output	77
	4	F32T8/30ES	1	ELECT NO EE	Energy efficiency Normal Output	101
	1	F32T8/30ES	1	ELECT RO EE	EE Reduced Output	28
	2	F32T8/30ES	1	ELECT RO EE	EE Reduced Output	45
	3	F32T8/30ES	1	ELECT RO EE	EE Reduced Output	66
	4	F32T8/30ES	1	ELECT RO EE	EE Reduced Output	88

Table NA8-3 (continued) – Fluorescent Rapid Start T-8

4 foot Fluorescent Rapid Start T8 (32W)	1	F32T8	1	ELECT NO	Electronic Normal Output	32
	2	F32T8	1	ELECT NO	Electronic Normal Output	62
	3	F32T8	1	ELECT NO	Electronic Normal Output	93
	4	F32T8	1	ELECT NO	Electronic Normal Output	114
	1	F32T8	1	EE NO	EE Normal Output	35
	2	F32T8	1	EE NO	EE Normal Output	55
	3	F32T8	1	EE NO	EE Normal Output	82
	4	F32T8	1	EE NO	EE Normal Output	107
	1	F32T8	1	ELECT RO	Electronic Reduced Output	29
	2	F32T8	1	ELECT RO	Electronic Reduced Output	51
	3	F32T8	1	ELECT RO	Electronic Reduced Output	76
	4	F32T8	1	ELECT RO	Electronic Reduced Output	98
	2	F32T8	1	ELECT HO	Electronic High Output	77
	3	F32T8	1	ELECT HO	Electronic High Output	112
	1	F32T8	1	EE RO	EE Reduced Output	30
	2	F32T8	1	EE RO	EE Reduced Output	48
	3	F32T8	1	EE RO	EE Reduced Output	73
	4	F32T8	1	EE RO	EE Reduced Output	96
	2	F32T8	1	ELECT TL	Electronic Two Level (50 & 100%)	65
	1	F32T8	1	ELECT DIM1	Electronic Dimming	35
	2	F32T8	1	ELECT DIM1	Electronic Dimming	68
	3	F32T8	1	ELECT DIM1	Electronic Dimming	102
	1	F32T8	1	ELECT DIM2	Electronic Dimming	33
	2	F32T8	1	ELECT DIM2	Electronic Dimming	64
	3	F32T8	1	ELECT DIM2	Electronic Dimming	93
	4	F32T8	1	ELECT DIM2	Electronic Dimming	116
5 foot Fluorescent Rapid Start T8 (40W)	1	F40T8	1	ELECT	Electronic	46
	2	F40T8	1	ELECT	Electronic	79
	3	F40T8	1	ELECT	Electronic	112

RO = ballast factor 70 to 85% NO = ballast factor 85 to 100% HO = ballast factor >100%

Table NA8-4 – Fluorescent Rapid Start High Output (HO) T8, 8 ft

Type	Lamps		Ballasts			System Watts	Comment
	Number	Designation	Number	Designation	Description		
8 foot Fluorescent Rapid Start T8 High Output (86W)	1	F96T8/HO	1	ELECT	Electronic	88	
	2	F96T8/HO	1	ELECT	Electronic	160	

HO = ballast factor >100%

Table NA8-5 – High Intensity Discharge

Type	Lamps		Ballasts			System Watts	Comment
	Number	Designation	Number	Designation	Description		
Metal Halide	1	M35/39	1	MAG STD	Mag. Stand.	58	
	1	M35/39	1	ELECT	Electronic	44	
	1	M50	1	MAG STD	Mag. Stand.	67	
	1	M50	1	ELECT	Electronic	58	
	1	M70	1	MAG STD	Mag. Stand.	95	
	1	M70	1	ELECT	Electronic	86	
	1	M100	1	MAG STD	Mag. Stand.	130	
	1	M100	1	ELECT	Electronic	110	
	1	M150	1	MAG STD	Mag. Stand.	185	
	1	M150	1	ELECT	Electronic	168	
	1	M175	1	MAG STD	Mag. Stand.	208	
	1	M175	1	ELECT	Electronic	194	
	1	M200	1	MAG STD	Mag. Stand.	232	
	1	M250	1	MAG STD	Mag. Stand.	295	
	1	M250	1	ELECT	Electronic	269	
	1	M320	1	MAG STD	Mag. Stand.	368	
	1	M320	1	ELECT	Electronic	343	
	1	M360	1	MAG STD	Mag. Stand.	422	
	1	M400	1	MAG STD	Mag. Stand.	452	
	1	M400	1	ELECT	Electronic	430	
	1	M450	1	MAG STD	Mag. Stand.	508	
	1	M750	1	MAG STD	Mag. Stand.	818	
	1	M1000	1	MAG STD	Mag. Stand.	1080	
	1	M1500	1	MAG STD	Mag. Stand.	1605	
High Pressure Sodium	1	S35	1	MAG STD	Mag. Stand.	47	
	1	S50	1	MAG STD	Mag. Stand.	66	
	1	S70	1	MAG STD	Mag. Stand.	91	
	1	S100	1	MAG STD	Mag. Stand.	128	
	1	S150	1	MAG STD	Mag. Stand.	188	
	1	S200	1	MAG STD	Mag. Stand.	230	
	1	S250	1	MAG STD	Mag. Stand.	295	
	1	S400	1	MAG STD	Mag. Stand.	464	
	1	S1000	1	MAG STD	Mag. Stand.	1100	

Table NA8-6 –12 Volt Tungsten Halogen Lamps Including MR16, Bi-pin, AR70, AR111, PAR36

(Shall NOT apply to track lighting systems)

Type	Lamps		Ballasts			System Watts	Comment
	Number	Designation	Number	Designation	Description		
	1	20 watt lamp	1	ELECT	Electronic Power Supply	23	
	1	25 watt lamp	1	ELECT	Electronic Power Supply	28	
	1	35 watt lamp	1	ELECT	Electronic Power Supply	38	
	1	37 watt lamp	1	ELECT	Electronic Power Supply	41	
	1	42 watt lamp	1	ELECT	Electronic Power Supply	45	
	1	50 watt lamp	1	ELECT	Electronic Power Supply	54	
	1	65 watt lamp	1	ELECT	Electronic Power Supply	69	
	1	71 watt lamp	1	ELECT	Electronic Power Supply	75	
	1	75 watt lamp	1	ELECT	Electronic Power Supply	80	
	1	20 watt lamp	1	MAG	Mag. Transformer	24	
	1	25 watt lamp	1	MAG	Mag. Transformer	29	
	1	35 watt lamp	1	MAG	Mag. Transformer	39	
	1	37 watt lamp	1	MAG	Mag. Transformer	42	
	1	42 watt lamp	1	MAG	Mag. Transformer	46	
	1	50 watt lamp	1	MAG	Mag. Transformer	55	
	1	65 watt lamp	1	MAG	Mag. Transformer	70	
	1	71 watt lamp	1	MAG	Mag. Transformer	76	
	1	75 watt lamp	1	MAG	Mag. Transformer	81	

(This page left intentionally blank.)