2013

RESIDENTIAL COMPLIANCE MANUAL

FOR THE 2013 BUILDING ENERGY EFFICIENCY STANDARDS

TITLE 24, PART 6, AND ASSOCIATED
ADMINISTRATIVE REGULATIONS IN PART 1

JUNE 2013
CEC-400-2013-001-SD

CALIFORNIA ENERGY COMMISSION
Edmund G. Brown Jr., Governor

John Laird
Secretary for Natural Resources Agency

CALIFORNIA ENERGY COMMISSION:

Robert Weisenmiller, Ph.D.
Chairman

Commissioners:
Andrew McAlister
Karen Douglas, J.D.
David Hochschild
Janea A. Scott

Rob Oglesby
Executive Director

David Ashuckian
Deputy Director
Efficiency and Renewable Energy Division

Bill Pennington
Deputy Division Chief
Efficiency and Renewable Energy Division

Eurlyne Geiszler
Office Manager
High Performance Buildings Office

Project Managers:
Maziar Shirakh, P.E.
High Performance Buildings Office

Acknowledgments

The Building Energy Efficiency Standards (Standards) were first adopted and put into effect in 1978 and have been updated periodically in the intervening years. The Standards are a unique California asset and have benefitted from the conscientious involvement and enduring commitment to the public good of many persons and organizations along the way. The 2013 Standards development and adoption process continued that long-standing practice of maintaining the Standards with technical rigor, challenging but achievable design and construction practices, public engagement and full consideration of the views of stakeholders.

The 2013 Standards revision and the supporting documents were conceptualized, evaluated and justified through the excellent work of Energy Commission staff and consultants working under contract to the Energy Commission, Pacific Gas and Electric Company, Southern California Edison Company, San Diego Gas and Electric Company, and Southern California Gas Company. At the Energy Commission, Maziar Shirakh, P.E.; and Martha Brook, P.E. served as the project managers and senior engineers. Bill Pennington, Deputy Division Chief of the Efficiency and Renewable Energy Division, provided overall guidance to the staff and consultants. Eurlyne Geiszler served as the Office Manager for the High Performance Buildings Office. Pippin Brehler and Kristen Driskell provided legal counsel to the staff. Other key technical staff contributors included, Gary Flamm; Patrick Saxton P.E.; Jeff Miller, P.E.; Payam Bozorgchami, P.E.; David Ware; Tav Commins; Rob Hudler; Owen Howlett; Danny Tam; and Nelson Pena. Additional staff input and assistance came from Ron Yasny; Seran Thamilseran; Brian Samuelson; Chris Olvera; Jim Holland; Todd Ferris; Joe Loyer, Alan Marshall; the Energy Hotline staff; and the Energy Commission's Web Team. Key Energy Commission and CASE consultants included Architectural Energy Corporation, Bruce Wilcox, Taylor Engineering, Proctor Engineering, Benya Lighting Design, Chitwood Energy Management, Davis Energy Group, EnerComp, McHugh Energy, Energy Solutions, E3, PECI, and the Heschong Mahone Group.

The authors are grateful to the many people and organizations that contributed to the development and production of the Standards and the supporting documents. The documents reflect, to a large extent, the comments made by the many people who took time to carefully review earlier versions. Reviewers who significantly contributed to the content include members of CABEC and CALBO. Special thanks go to Panama Bartholomy, the former Deputy Director Efficiency and Renewable Energy Division for his vision and support of the 2013 Standards.

The authors are grateful to the many people and organizations that contributed to the development and production of the Standards and the supporting documents. The documents reflect, to a large extent, the comments made by the many people who took time to carefully review earlier versions. Reviewers who significantly contributed to the content include members of CABEC and CALBO. Special thanks go to Panama Bartholomy, the former Deputy Director Efficiency and Renewable Energy Division for his vision and support of the 2013 Standards.

*The Energy Commission dedicates the adoption of the 2013 Building Energy Efficiency Standards to **Valerie T. Hall**, (November 28, 1952 - December 21, 2010), Deputy Director of the Efficiency and Renewable Energy Division for her more than 32 years of dedication to excellence in the development and implementation of energy efficiency programs in California with the most aggressive energy efficient building standards in the country and for being a model for others to follow.*

Abstract

This manual is designed to help building owners, architects, engineers, designers, energy consultants, builders, enforcement agencies, contractors and installers, and manufacturers comply with and enforce the 2013 Title 24 California Building Energy Efficiency Standards (Standards) for low-rise residential buildings. Written as both a reference and an instructional guide, this manual can be helpful for anyone that is directly or indirectly involved in the design and construction of energy efficient nonresidential buildings. This manual is intended to supplement several other documents that are available from the California Energy Commission (Energy Commission). These are the: (1) 2013 California Building Energy Efficiency Standards, which were adopted May 31, 2012 and become effective January 1, 2014; (2) Reference Appendices for the Standards; and (3) Residential Alternative Calculation Method Reference and Approval Manuals. This manual provides a summary of the principle changes in the 2013 Standards relative to the 2008 Standards. The technical chapters cover building envelope, mechanical / heating ventilation and air conditioning (HVAC) systems, water heating (including swimming pool system requirements), interior and for outdoor lighting permanently attached to the building, and the solar ready zone requirements. Mandatory measures, prescriptive requirements and compliance options are described within each technical area, subsystem or component. Other subjects that are covered include the compliance and enforcement process, including design and preparation of compliance documentation through field verification and diagnostic testing; computer performance approach; additions, alterations and repairs; New Solar Home Partnership (NSHP) requirements; and HERS (Home Energy Rating System) raters.

Keywords: title 24, energy, energy efficiency, low-rise residential buildings, building envelope, domestic water heating, HVAC, indoor outdoor lighting, performance approach, prescriptive approach, mandatory requirements, residential compliance manual, HERS rating, diagnostic testing, solar, residential cool roofs, residential additions alterations repairs, climate zones

1. Introduction 1-1
1.1 Related Documents 1-1
1.2 The Technical Chapters 1-2
1.3 Why California Needs Building Energy Efficiency Standards 1-3
1.3.1 Energy Savings 1-3
1.3.2 Electricity Reliability and Demand 1-3
1.3.3 Comfort 1-4
1.3.4 Economics 1-4
1.3.5 Environment 1-4
1.3.6 Global Warming 1-4
1.3.7 The Warren-Alquist Act 1-5
1.4 What's New for 2013 1-6
1.4.1 All compliance approaches: 1-6
1.4.2 Mandatory Measures 1-6
1.4.3 Prescriptive compliance: 1-7
1.4.4 Performance compliance: 1-7
1.4.5 Additions and Alterations: 1-7
1.5 Scope and Application 1-8
1.5.1 Building Types 1-8
1.5.2 Explanation of Terms 1-9
1.5.3 Building Orientation 1-10
1.5.4 Historical Buildings 1-11
1.5.5 Exempt Buildings 1-13
1.5.6 Building Systems Covered 1-14
1.5.7 Additions, Alterations and Repairs 1-14
1.6 Mandatory Measures and Compliance Approaches 1-18
1.6.1 Approaches 1-18
1.6.2 Mandatory Measures 1-19
1.6.3 Prescriptive Package A - §150.1(c) 1-19
1.6.4 Performance Approach 1-20
1.7 Climate Zones 1-20
1.7.1 Building Location Data 1-21

1.8 Conditioned Floor Area 1-22
1.9 Where to Get Help 1-23
1.9.1 Energy Commission Publications and Support 1-23
1.9.2 Training Opportunities 1-25
1.9.3 Energy Consultants 1-25
1.9.4 Online Videos 1-25
1.9.5 HERS Raters and Providers 1-26
2. Compliance and Enforcement 2-1
2.1 Overview 2-1
2.1.1 Compliance Document Registration 2-2
2.2 Compliance and Enforcement Phases 2-3
2.2.1 Design Phase 2-4
2.2.2 Permit Application 2-5
2.2.3 Plan Check 2-6
2.2.4 Building Permit 2-7
2.2.5 Construction Phase 2-7
2.2.6 Enforcement Agency Field Inspection 2-8
2.2.7 Field Verification and/or Diagnostic Testing 2-10
2.2.8 Approval for Occupancy 2-12
2.2.9 Occupancy 2-12
2.3 Energy Standards Compliance Documentation 2-13
2.3.1 Building Permit Phase Documentation 2-15
2.3.2 Certificate of Compliance (CF1R) 2-15
2.3.3 Construction Phase Documentation (CF2R) 2-16
2.3.4 Field Verification and/or Diagnostic Testing Documentation (CF3R) 2-19
2.3.5 Compliance, Operating, and Maintenance, and Ventilation Information to be Provided by Builder 2-20
2.4 Roles and Responsibilities 2-22
2.4.1 Designer 2-22
2.4.2 Documentation Author 2-23
2.4.3 Builder or General Contractor 2-24
2.4.4 Specialty Subcontractors 2-25

2.4.5 Enforcement Agency 2-26
2.4.6 HERS Provider 2-29
2.4.7 HERS Rater 2-30
2.4.8 Third Party Quality Control Program 2-33
2.4.9 Owner 2-34
2.5 HERS Field Verification and Diagnostic Testing 2-35
2.5.1 Measures Requiring HERS Field Verification and Diagnostic Testing 2-36
2.5.2 Verification, Testing and Sampling 2-37
2.5.3 Initial Model Field Verification and Diagnostic Testing 2-38
2.5.4 Group Sample Field Verification and Diagnostic Testing 2-39
2.5.5 Re-sampling, Full Testing and Corrective Action 2-41
2.5.6 Installer Requirements and HERS Procedures for Alterations 2-42
2.5.7 For More Information 2-43
3. Building Envelope Requirements 3-1
3.1 Organization 3-1
3.2 What's New for 2013 3-2
3.3 Compliance Options 3-2
3.4 Key Envelope Compliance Terms 3-4
3.5 Fenestration 3-9
3.5.1 Fenestration Types 3-9
3.5.2 Relevant Sections in the Standards for Fenestration 3-11
3.5.3 Mandatory Measures, Feature and Devices 3-12
3.5.4 Prescriptive Requirements 3-21
3.5.5 Compliance Alternatives 3-28
3.6 Envelope Features 3-35
3.6.1 Mandatory Requirements 3-35
3.6.2 Prescriptive Requirements 3-49
3.7 Advanced Assembly Systems 3-61
3.8 Compliance and Enforcement 3-87
3.9 Glossary/References 3-89
4. Building HVAC Requirements 4-1
4.1 Overview 4-1

4.1.1 Introduction and Organization 4-1
4.1.2 What's New for the 2013 Standards 4-2
4.1.3 Common System Types 4-3
4.1.4 California Appliance Standards and Equipment Certification 4-4
4.1.5 Federal Appliance Standards (NAECA) 4-5
4.2 Heating Equipment 4-7
4.2.1 Mandatory Measures for Heating Equipment 4-7
4.2.2 Prescriptive Requirements for Heating Equipment 4-13
4.2.3 Compliance Options for Heating Equipment 4-13
4.3 Cooling Equipment 4-14
4.3.1 Mandatory Measures for Cooling Equipment 4-14
4.3.2 Prescriptive Requirements for Cooling Equipment 4-21
4.3.3 Performance Compliance Options for Cooling Equipment 4-23
4.4 Air Distribution System Ducts, Plenums, and Fans 4-24
4.4.1 Mandatory Measures for Air Distribution System Ducts, Plenums, and Fans 4-24
4.4.1 Prescriptive Requirements for Air Distribution System Ducts, Plenums, and Fans 4-41
4.4.2 Compliance Options for Air Distribution System Ducts, Plenums, and Fans 4-42
4.4.3 Duct Installation Standards 4-45
4.5 Controls 4-52
4.5.1 Thermostats 4-52
4.5.2 Zonal Control 4-53
4.6 Indoor Air Quality and Mechanical Ventilation 4-57
4.6.1 Typical Solutions for Whole-Building Ventilation 4-62
4.6.2 Whole-building Ventilation Flow Rate (Section 4 of ASHRAE 62.2) 4-65
4.6.3 Whole-Building Mechanical Ventilation Energy Consumption 4-73
4.6.4 Local Exhaust (Section 5 of ASHRAE 62.2) 4-75
4.6.5 Other Requirements (Section 6 of ASHRAE 62.2) 4-78
4.6.6 Air Moving Equipment (Section 7 of ASHRAE 62.2) 4-88
4.7 Alternative Systems 4-92
4.7.1 Hydronic Heating Systems 4-92
4.7.2 Mandatory Requirements 4-93
4.7.3 Radiant Floor System 4-96

4.7.4 Evaporative Cooling 4-99
4.7.5 Ground-Source Heat Pumps 4-101
4.7.6 Solar Space Heating 4-102
4.7.7 Wood Space Heating 4-102
4.7.8 Gas Appliances 4-104
4.7.9 Evaporatively Cooled Condensers 4-104
4.7.10 Ice Storage Air Conditioners 4-105
4.7.11 Non-Ducted Systems 4-105
4.7.12 Ventilation Cooling 4-105
4.8 Compliance and Enforcement 4-116
4.8.1 Design-Phase Documentation 4-116
4.8.2 Construction-Phase Documentation 4-117
4.8.3 Field Verification and/or Diagnostic Testing 4-118
4.9 Refrigerant Charge 4-119
4.9.1 Refrigerant Charge Verification 4-119
5. Water Heating Requirements 5-1
5.1 Overview 5-1
5.1.1 Water Heating Energy 5-1
5.1.2 What's New for 2013 5-2
5.2 Water Heating Equipment 5-5
5.2.1 Water Heater Types 5-5
5.2.2 Mandatory Requirements for Water Heaters 5-8
5.3 Distribution Systems 5-12
5.3.1 Types of Water Heating Distribution Systems 5-12
5.3.2 Systems Serving Single Dwelling Unit 5-13
5.3.3 Systems Serving Multiple Dwelling Units 5-18
5.3.4 Mandatory Requirements for Distribution Systems 5-19
5.3.5 Distribution System Compliance Limitations 5-24
5.4 Prescriptive Water Heater and Distribution System Requirements 5-25
5.4.1 Single Dwelling Units 5-25
5.4.2 Multiple Dwelling Units: Multi-family, Motel/Hotels and High-Rise Nonresidential 5-27
5.5 Water Heating System Performance Compliance 5-32

5.5.1 Treatment of Water Heater Efficiency 5-34
5.5.2 Compliance Issues 5-35
5.6 Solar Water Heating 5-36
5.6.1 Prescriptive Requirements 5-37
5.6.2 Performance Compliance 5-39
5.7 Swimming Pool and Spa Heating 5-39
5.7.1 Swimming Pool and Spa Types 5-39
5.7.2 Mandatory Requirements 5-40
5.8 Combined Hydronic System 5-44
5.8.1 Combined Hydronic 5-44
5.9 Shower Heads 5-44
5.9.1 Certification of Showerheads and Faucets 5-44
5.10 Compliance and Enforcement 5-45
5.10.1 Design Review 5-45
5.10.2 Field Inspection 5-45
5.10.3 Field Verification and/or Diagnostic Testing 5-46
5.11 Glossary/Reference 5-47
6. Residential Lighting 6-1
6.1 Overview 6-1
6.1.1 Scope 6-1
6.1.2 Summary of Requirements by Space Type 6-4
6.1.3 Residential Luminaire Requirements 6-6
6.1.4 Related Documents 6-6
6.2 Certification to the Energy Commission 6-8
6.2.1 Self-Contained Lighting Controls 6-8
6.2.2 Lighting Control Systems 6-9
6.2.3 Qualifying LED as High Efficacy 6-10
6.2.4 Ballasts for Compact Fluorescent Luminaires 6-10
6.3 Requirements for Residential Luminaires 6-11
6.3.1 Permanently Installed vs. Portable Luminaires 6-11
6.3.2 Residential High Efficacy Luminaires 6-12
6.3.3 Residential Low Efficacy Luminaires 6-12

6.3.4 Residential Hybrid LED Luminaires 6-15
6.3.5 GU-24 Luminaires 6-15
6.3.6 NO “Permanent” GU-24 Adaptors 6-16
6.3.7 LED Must Be Certified to Qualify as Residential High Efficacy 6-16
6.3.8 Electronic Ballasts 6-20
6.3.9 Ballasts for Residential Recessed Luminaires 6-20
6.3.10 Night Lights 6-21
6.3.11 Lighting Integral to Exhaust Fans 6-21
6.3.12 IC/AT Luminaires Recessed in Ceilings 6-21
6.3.13 Building Official Inspection of IC/AT Requirements 6-23
6.3.14 Recommendations for Luminaire Specifications 6-26
6.4 Calculating Kitchen Wattage and Classifying Luminaires 6-28
6.4.1 Luminaire Labeling Requirements 6-28
6.4.2 Incandescent Luminaires 6-29
6.4.3 Fluorescent and High Intensity Discharge (HID) Luminaires 6-30
6.4.4 Track Lighting 6-30
6.4.5 Low Voltage Lighting 6-31
6.4.6 LED Luminaires and Light Engines 6-31
6.4.7 Miscellaneous Lighting Systems 6-32
6.4.8 Blank Electrical Boxes 6-32
6.5 Requirements for Switching Devices and Controls 6-33
6.5.1 Certification of Residential Lighting Controls 6-33
6.5.2 Lighting Control Switching Requirements 6-33
6.5.3 Lighting Control Systems and Energy Management Control Systems 6-34
6.5.4 Vacancy Sensors 6-34
6.5.5 Residential Dimmers 6-36
6.6 Requirements for Specific Indoor Space Types 6-38
6.6.1 Residential Kitchen 6-38
6.6.2 Bathrooms 6-47
6.6.3 Garages, Laundry Rooms, and Utility Rooms 6-49
6.6.4 Other Rooms 6-50
6.7 Requirements for Residential Outdoor Lighting 6-53

6.7.1 Single-Family Buildings 6-53
6.7.2 Low-Rise Multifamily Buildings 6-54
6.7.3 High-Rise Multifamily buildings 6-54
6.7.4 Address Signs 6-54
6.7.5 Hot and Cold Environments 6-55
6.7.6 Outdoor Lighting Not Attached to a Building 6-55
6.7.7 Residential Parking Lots, Carports and Parking Garages 6-56
6.8 Common Areas of Multi-family Buildings 6-58
6.9 Requirements for Residential LED Lighting 6-60
6.9.1 Certification Responsibilities 6-60
6.9.2 Definitions 6-60
6.9.3 Classifying Luminaires and Determining Input Wattage 6-61
6.9.4 Qualification Requirements for Residential Luminaires Using LED Light Source 6-62
6.10 Residential Lighting Compliance Documentation 6-65
6.10.1 Certificate of Installation 6-65
6.10.2 Documentation for Lighting Control Systems 6-66
7. Solar Ready 7-1
7.1 Overview 7-1
7.2 Covered Occupancies 7-2
7.3 Solar Zone 7-2
7.3.1 Minimum Area 7-3
7.3.2 Orientation 7-9
7.3.3 Shading 7-9
7.4 Construction Documents 7-10
7.4.1 Structural Design Loads 7-10
7.4.2 Interconnection Pathways 7-10
7.4.3 Documentation 7-11
7.5 Main Electrical Service Panel 7-11
7.6 California Fire Code Solar Access Requirements 7-11
7.7 Compliance and Enforcement 7-14
7.8 Photovoltaic Installation Requirements 7-15
8. Performance Method 8-1

8.1 Overview 8-1
8.2 What's New for 2013 8-2
8.3 The Performance Compliance Process 8-2
8.3.1 Defining the Standard Design 8-3
8.3.2 Professional Judgment 8-4
8.4 Mixed Occupancy Buildings 8-5
8.5 Multifamily Buildings 8-6
8.5.1 Whole-building Compliance Approach 8-6
8.5.2 Unit-By-Unit Compliance Approach – Fixed Orientation Alternative 8-7
8.5.3 Unit-By-Unit Compliance Approach – Multiple Orientation Alternative 8-9
8.6 Subdivisions and Master Plans 8-9
8.6.2 Individual Building Approach 8-10
8.6.3 Multiple Orientation Alternative: No Orientation Restrictions 8-10
8.7 HVAC Issues 8-12
8.7.1 No Cooling Installed 8-12
8.7.2 Equipment without SEER or HSPF 8-12
8.7.3 Multiple HVAC Systems 8-12
8.7.4 Existing + Addition + Alteration Approach 8-13
9. Additions, Alterations and Repairs 9-1
9.1 Introduction 9-1
9.2 What's New in the 2013 Standards 9-5
9.3 Compliance Approaches 9-8
9.4 Mandatory Requirements 9-11
9.5 Additions 9-17
9.5.1 Prescriptive Requirements 9-17
9.5.2 Performance Method: Addition Alone and Existing + Addition + Alterations Approach 9-26
9.6 Alterations 9-30
9.7 Performance Method: Existing + Additions + Alterations 9-58

1. Introduction

This compliance manual is intended to help plans examiners, inspectors, owners, designers, builders, and energy consultants comply with and enforce California's 2013 Building Energy Efficiency Standards for low-rise residential buildings. The lighting and domestic hot water requirements in this compliance manual also apply to high-rise residential buildings. The manual is written as a reference and an instructional guide and can be helpful for anyone that is directly or indirectly involved in the design and construction of energy efficient low-rise residential buildings.

The compliance manual has nine chapters:

Chapter 1 introduces the Standards and discusses the application and scope of the Standards for low-rise residences.

Chapter 2 reviews the compliance and enforcement process, including design and preparation of compliance documentation through field verification and diagnostic testing.

Chapter 3 addresses the requirements for the design of the building envelope.

Chapter 4 covers the requirements for HVAC systems.

Chapter 5 covers the water heating systems requirements, including the requirements for swimming pool systems.

Chapter 6 addresses the requirements for hardwired interior lighting and for outdoor lighting permanently attached to the building.

Chapter 7 addresses the new solar ready requirements for low-rise residential buildings and covers guidelines for complying with the requirements of the New Solar Homes Partnership.

Chapter 8 covers the computer performance approach.

Chapter 9 covers additions, alterations, and repairs.

1.1 Related Documents

This compliance manual is intended to supplement four other related documents that are available from the California Energy Commission (Energy Commission). These are as follows:

A. The California 2013 Building Energy Efficiency Standards, Title 24, Part 6 (Standards). This compliance manual supplements and explains California's energy efficiency standards for buildings; it does not replace them. Readers should have a copy of the Standards to refer to while reading this manual as well as a copy of the 2013 Reference Appendices which contain information that is common to both the residential and nonresidential standards.

B. 2013 Reference Appendices - The Reference Appendices have three main

subsections: Reference Joint Appendices, Reference Residential Appendices, and Reference Nonresidential Appendices:

1. The 2013 Reference Joint Appendices contain information common to both residential and nonresidential buildings including, but not limited to: definitions, climate zone listings, weather data, assembly properties, and compliance documentation registration procedures.
2. The 2013 Reference Residential Appendices contain information for residential buildings only. The Reference Residential Appendices contain HERS field verification and/or diagnostic testing procedures for HVAC equipment, air distribution ducts, and insulation construction quality. The Reference Residential Appendices also contain eligibility criteria for energy efficiency measures.
3. The 2013 Reference Nonresidential Appendices contain information for nonresidential buildings only. The Reference Nonresidential Appendices contain HERS field verification and/or diagnostic testing procedures for HVAC equipment and air distribution ducts, acceptance testing procedures, and luminaire power default values.

C. The 2013 Residential Alternate Calculation Method (ACMs or Compliance Software) Approval Manual. The 2013 Residential ACM Approval Manual describes the process for certifying and decertifying the compliance software programs.

D. The 2013 Residential Alternate Calculation Method Reference Manual is a new document in 2013 and lays out the technical rules for implementing the 2013 performance compliance path in software programs.

Material from related documents is not repeated in this Compliance Manual; rather, it is referenced. If you are using the electronic version of this Compliance Manual, there are hyperlinks throughout the manual that will take you directly to the document that is referenced.

1.2 The Technical Chapters

Each of the five technical chapters (3 through 7) begins with an overview, followed by a presentation of a specific topic in each subsection. For the building envelope, subsections include fenestration, opaque surfaces (walls, floors, and roofs), air leakage and infiltration, radiant barriers, cool roofs, and HERS quality insulation installation (QII) verification. For HVAC, the subsections include heating equipment, cooling equipment, ducts, and HERS field verification and diagnostic testing. For water heating, subsections include equipment efficiencies and distribution systems. Lighting subsections include high efficacy and low efficacy lighting, LED lighting, switching devices and controls, and recessed luminaires. Mandatory measures and prescriptive requirements (defined in Section 1.6 of this chapter) are described within each subsection or component. Chapter 8 describes the computer performance approach. Chapter 9 covers requirements for additions

and alterations. Chapter 2, although not a technical chapter, covers important compliance and enforcement topics.

Each technical chapter or subsection also has a *compliance options* section. The *compliance options* section includes information on how to design a building that goes beyond the *prescriptive* energy efficiency requirements and *mandatory* energy efficiency measures. Compliance options are utilized for compliance credit through the performance approach. There are also *design recommendations*, such as on-site generation, for which no energy code compliance credit is offered. However, following the recommendations will significantly impact building energy use or peak demand.

Table 1-1 – Compliance Options vs. Design Recommendations

Compliance Options	*Design Recommendations, such as on-site generation*
Credit offered through the performance approach	*No credit, but may still impact energy or demand.*

1.3 Why California Needs Building Energy Efficiency Standards

Energy efficiency reduces energy costs, increases reliability and availability of electricity, improves building occupant comfort, and reduces impacts to the environment making standards important and necessary for California's energy future.

1.3.1 Energy Savings

Reducing energy use is a benefit to all. Homeowners save money, Californians have a more secure and healthy economy, the environment is less negatively impacted, and our electrical system can operate in a more stable manner. The 2013 Standards (for both residential and nonresidential buildings) are expected to reduce the growth in electricity use by 464 gigawatt-hours per year (GWh/yr) and reduce the growth in natural gas use by 10.9 million therms per year (therms/yr). The savings attributable to new low-rise residences are 23.6 GWh/yr of electricity savings and 1.1 million therms of natural gas. These savings are first year annual savings based on the estimated housing starts and existing dwelling renovation levels. The cumulative 3-year savings are much higher than these numbers.

1.3.2 Electricity Reliability and Demand

Buildings are one of the major contributors to electricity demand. We learned during the 2000/2001 California electricity crisis and the east coast blackout in the summer of 2003 that our electric distribution network is fragile and system overloads caused by excessive demand from buildings can create unstable conditions. Furthermore, resulting blackouts can seriously disrupt business and cost the economy billions of dollars.

Since the California electricity crisis, the Energy Commission has placed more and more emphasis on demand reduction. The 2013 Standards are expected to reduce electric demand by 138.7 MW each year and 35 MW are attributable to low-rise residential buildings. Like energy savings, demand savings accumulate each year.

1.3.3 Comfort

Comfort is an important benefit of energy efficient homes. Energy efficient houses are well insulated, less drafty, and use high performance windows and/or shading to reduce solar gains and heat loss. Poorly designed building envelopes result in houses that are less comfortable. Even with oversized heating and cooling systems, comfort cannot be achieved in older, poorly insulated and leaky homes.

1.3.4 Economics

For the homeowner, energy efficiency helps to ensure that a home is affordable both now and into the future. Banks and other financial institutions recognize the impact of energy efficiency through energy efficient mortgages; they look at the total cost of owning the home, including paying the utility bills. If the utility bills are lower, lenders can qualify borrowers for a larger loan.

From a larger perspective, the less California depends on depletable resources such as natural gas, coal, and oil, the stronger and more stable the economy will remain in the face of energy cost increases. A cost-effective investment in energy efficiency helps everyone. In many ways, it is far more cost effective for the people of California to invest in saving energy than it is to invest in building new power plants.

1.3.5 Environment

In many parts of the world, energy use has led to oil spills, acid rain, smog, and other forms of environmental pollution that have ruined the natural beauty people seek to enjoy. California is not immune to these problems, but appliance standards, building standards, and utility programs that promote efficiency and conservation help to maintain environmental quality. Other benefits include reduced destruction of natural habitats, which helps protect animals, plants, and natural systems.

1.3.6 Global Warming

Burning fossil fuels contributes greatly to global warming; carbon dioxide is being added to an atmosphere already containing 35 percent more than it did two centuries ago. Carbon dioxide and other greenhouse gases create an insulating layer around the earth that leads to global climate change. Energy Commission research shows that most of the sectors of the state economy face significant risk from climate change, including water resources (from reduced snow pack), agriculture, forests, and the natural habitats of a number of indigenous plants and animals.

Scientists recommend that actions be taken to reduce emissions of carbon dioxide and other greenhouse gases. While adding scrubbers to power plants and catalytic converters to cars reduce other emissions, they do not limit the carbon dioxide we emit into the atmosphere. Using energy efficiently is a far-reaching strategy that can make an important contribution to the reduction of greenhouse gases.

The National Academy of Sciences has urged the whole country to follow California's lead on such efforts, saying that conservation and efficiency should be the chief element in energy and global warming policy. Their first efficiency recommendation was simple: Adopt nationwide energy efficient building codes. Energy conservation will not only increase comfort levels and save homeowners money, it will also play a vital role in creating and maintaining a healthy environment.

The Standards are expected to have a significant impact on reducing greenhouse gas and other air emissions. Carbon dioxide, one of the more prevalent greenhouse gases, would be reduced by 16,110 metric tons the first year when the Standards go into effect; the cumulative 3-year savings or the CO^2 savings over the life of the Standards are much higher than the savings indicated above.. These estimates are based, when possible, on hourly emission rates for electricity use in southern and northern California. When savings estimates are made on an annual basis, average emission rates are used.

1.3.7 The Warren-Alquist Act

Section 25402 of the Public Resources Code

The authority of the Energy Commission to develop and maintain building energy efficiency standards for new buildings is provided in Section 25402 of the Public Resources Code (the Code). This section of the Code, commonly referred to as the Warren-Alquist Act (the Act), is direction from the legislature on the development of building energy efficiency standards in California.

The Act created the Energy Commission in 1974 and gave it authority to develop and maintain building energy efficiency standards for new buildings. The Act directs the Energy Commission to “Prescribe, by regulation, lighting, insulation, climate control system, and other building design and construction standards which increase the efficiency in the use of energy for new residential and new nonresidential buildings.”

The Act also requires that the Standards be cost effective “when taken in their entirety and amortized over the economic life of the structure,” and it requires that the Energy Commission periodically update the Standards and develop manuals to support the Standards. The Act directs local building permit jurisdictions to withhold permits until the building satisfies the Standards.

The Public Resources Code was amended through Senate Bill 5X in 2002 to expand the authority of the Energy Commission to develop and maintain standards for outdoor lighting and signs.

1.4 What's New for 2013

The most significant changes in the 2013 Building Energy Efficiency Standards affecting residential buildings include the new requirements for high performance fenestration products. Other changes for residential buildings include the following:

1.4.1 All compliance approaches:

A. Revisions to the administrative section §10-103 sets the format and informational order for electronic compliance document registration and submittal and for electronic retention of compliance documentation for future use and clarifies the roles and responsibilities of the documentation author and the responsible person; §10-109 describes the rules for approving compliance software, alternative component packages, exceptional methods, data registries and related data input software, or electronic document repositories. §10-111 describes the rules for reporting fenestration U-factor, SHGC, and VT.

B. §110.3(c)5 explains the requirements for the water heating recirculation loops serving multiple dwelling units, high-rise residential, hotel/motel, and nonresidential occupancies..

C. Revisions to §110.9 now covers ballasts and luminaires and residential vacancy sensors.

1.4.2 Mandatory Measures

A. Duct sealing in all climate zones (CZs) (defined in Section 1.7 of this chapter). (Section 150.0(m)11)

B. Return duct design or fan power, airflow testing, and grill sizing requirements (Residential HVAC Quality Installation Improvements). (Section150.0(m)13)

C. Lighting – Improving and clarifying the mandatory lighting requirements for all residential buildings including kitchens, bathrooms, dining rooms, utility rooms, garages, hall ways, bedrooms, and outdoor lighting. (Section150.0(k)

D. New luminaire efficacy levels in Table 150.0-B

E. Hot water pipe insulation - Requires insulation on pipes ¾ inch and larger. (Section150.0(j)2Aii)

F. Solar Ready Measure – 250 square feet of solar ready zone on single family roofs in subdivisions of 10 or more swelling units. (Section150.0(r))

G. Walls with 2x6 framing and larger must have at least R-19 insulation (Section 150.0(c)2).

H. New mandatory U-factor of 0.58 for vertical fenestrations products and skylights, Section 150.0(q).

I. New third party HERS verifications requirement for Ventilation for Indoor Air Quality, ASHRAE 62.2 requirements, Section 150.0(o).

1.4.3 Prescriptive compliance:

A. High Performance Windows – Reducing the U-Factor to 0.32 and SHGC to 0.25 in most climate zones. (Section 150.1(c)3A).

B. Duct Insulation – Raise minimum from R-4.2 to R-6.0 in climate zones 6, 7, and 8. (Section 150.1(c)9).

C. Night Ventilation – Whole house fan required to be installed in climate zones 8 through 14; a Smart Vents and Night Breeze allowed as performance path alternatives. (Section 150.1(c)12).

D. Expand the Radiant Barrier requirements to climate zones 3, and 5 through 7. (Section 150.1(c)2).

E. Refrigerant charge and verification now expanded to include ducted package units, mini-splits, and other units (Section 150.1(c)7).

F. Increase wall insulation to R15+4 in all CZs (Section 150.1(c)1B).

1.4.4 Performance compliance:

The modeling procedures and requirements for compliance software have been significantly modified for the 2013 Standards. All compliance software vendors must use a single modeling approach and a single interpretation of the performance compliance rules. This "Compliance Manager" software will be integrated into vendor-supplied compliance software that is certified by the Energy Commission. More information is available in the 2013 Residential ACM Approval Manual and the 2013 Residential ACM Reference Manual.

1.4.5 Additions and Alterations:

A. Simplified Compliance documentation requirements for small additions and alteration projects that do not involve a HERS measure. (Section 10-103(a)1C and Section 10-103(a)3C)

B. Simplified rules for both the prescriptive and performance paths for additions,

alterations, and existing plus additions plus alterations. (Section 150.2(a) and (b))

1.5 Scope and Application

1.5.1 Building Types

Though the California Standards apply to both nonresidential and residential buildings, this compliance manual only address the requirements for low-rise residential buildings. A companion compliance manual addresses the requirements for nonresidential buildings, including hotels, motels, and high-rise residential buildings that are four stories or more in height.

Mixed Low-Rise Residential and Nonresidential Occupancies. When a building includes both low-rise residential and nonresidential occupancies, the requirements are different depending upon the percentages of the conditioned floor that is occupied by each occupancy type:

i. **Minor Occupancy** (Exception 1 to §100(f)). When a residential occupancy occurs in the same building as a nonresidential occupancy, and if one of the occupancies is less than 20 percent of the total conditioned floor area, the smaller occupancy is considered a “minor” occupancy. Under this scenario, optionally, the entire building may be treated as if it is the major occupancy for the purpose of envelope, HVAC, and water heating. Lighting requirements in §140.6 through 140.8 or 150.0(k) must be met for each occupancy separately. The mandatory measures applicable to the minor occupancy, if different from the major occupancy, would still apply.

ii. **Mixed Occupancy.** When residential occupancy is mixed with a nonresidential occupancy, and if neither occupancy is less than 20 percent of the total conditioned floor area, these occupancies fall under different sets of Standards and must be considered separately. Two compliance submittals must be prepared, each using the calculations and forms of its respective Standards. Separate compliance for each occupancy, to their respective Standards, is an option when one of the occupancies is a minor occupancy, as discussed in the paragraph above.

In multi-family buildings, lighting in common areas is subject to all nonresidential requirements if the common area CFA exceeds 20% of the building CFA. Where the common area does not exceed 20% of the building CFA, lighting must meet mandatory requirements – a choice of high-efficacy lighting or automatic controls. See Standards § 150.0(k)12.

The three-story designation relates to multifamily buildings, since all single family homes fall under the low-rise residential requirements regardless of the number of stories. An apartment building with three or fewer habitable stories falls under the low-rise residential standards while an apartment building that has more than three habitable stories falls under the nonresidential standards. High-rise residential dwelling units must still comply with the lighting and water heating

requirements for low-rise residential buildings, e.g., the *Nonresidential Compliance Manual* makes reference to Chapters 5 and 6 of this document.

A habitable story is defined in the California Building Code (CBC) and that definition is used with the building energy efficiency standards. Mezzanines are not counted as separate habitable stories – nor are minor conditioned spaces such as an enclosed entry stair that leads to an apartment or dwelling unit on the next floor. A habitable story is one that contains space in which humans may live or work in reasonable comfort, and that has at least 50 percent of its volume above grade.

Live/work buildings are a special case since they combine residential and nonresidential uses within individual units. Such buildings are a common form of new construction in San Francisco and some other urban areas of the state. Even though live/work spaces may be used for an office or a studio, they are typically heated and/or cooled like a residence. For this reason the residential standards are more suitable and the Energy Commission has made this determination. Either the low-rise or high-rise residential standards apply, depending on the number of habitable stories.

However, lighting in designated workspaces in live/work lofts must comply with the nonresidential prescriptive lighting requirements. See Chapter 5 of the *Nonresidential Compliance Manual* and §140.6 for more information.

1.5.2 Explanation of Terms

The term building type refers to the classification of buildings defined by the *CBC* and applicable to the requirements of the *Building Energy Efficiency Standards*. This manual is concerned with the building energy efficiency standards that apply to all low-rise residential buildings, which includes all single-family dwellings and multi-family buildings with three or fewer habitable stories in the entire building. A multi-family building with four or more habitable stories is under the scope of the nonresidential requirements, but the dwelling units must meet the lighting, water heating, and setback thermostat requirements for low-rise residential buildings. A multi-family building contains multiple dwelling units that share common walls (single family attached) and may also share common floors or ceilings (apartments).

All residential buildings not in the above low-rise category are covered in the 2013 edition of the Energy Commission's *Nonresidential Compliance Manual* (see Parts 1.1 and 1.2).

A. A **single-family building** is a single dwelling unit of occupancy group R-3, as defined in the *CBC*, which stands separate and unattached from other dwelling units but may have an attached garage.

B. A **multi-family building** is a dwelling unit of occupancy group R, as defined in the *CBC*; that shares a common wall and/or floor/ceiling with at least one other dwelling unit. See Chapter 8 for more information on multi-family energy compliance. A single family attached building is a dwelling unit of occupancy group R that shares a common wall with another dwelling unit.

C. An **addition** to an existing building increases both the conditioned floor area and volume of a building, which can be new construction or adding space conditioning to an existing unconditioned space. See Chapter 9 for more information on energy compliance of additions.

D. An **existing building** is: "...a building erected prior to the adoption of [the current] code, or one for which a legal building permit has been issued." [CBC, Part 2]

1.5.3 Building Orientation

Building orientation can affect the energy use of a building, particularly in cooling dominated climate zones with high amount of west facing glass. Some prescriptive requirements and performance modeling inputs for compliance with the Standards require a description of the building orientation.

A. East-Facing

"East-facing is oriented to within 45 degrees of true east, including 45°0'0" south of east (SE), but excluding 45°0'0" north of east (NE)." [§100.1]

B. North-Facing

"North-facing is oriented to within 45 degrees of true north, including 45°0'0" east of north (NE), but excluding 45°0'0" west of north (NW)." [§100.1]

C. South-Facing

"South-facing is oriented to within 45 degrees of true south, including 45°0'0" west of south (SW), but excluding 45°0'0" east of south (SE)." [§100.1]

D. West-Facing

"West-facing is oriented to within 45 degrees of true west, including 45°0'0" due north of west (NW) but excluding 45°0'0" south of west (SW)." [§100.1]

Table 1-2 – Building Types Covered by the Low-Rise Residential and Nonresidential Standards

Low-Rise Residential Standards (covered in this compliance manual)	Nonresidential Standards (covered by Nonresidential Compliance Manual)
All low-rise residential occupancies including single family homes, duplexes, garden apartments and other housing types with three or fewer habitable stories.	All nonresidential CBC occupancies (Group A, B, E, F, H, M, S, or U), as well as high-rise residential (Groups R-1 and R-2 with four or more habitable stories), and all hotel and motel occupancies.
Includes: All single family dwellings of any number of stories (Group R-3) All duplex (two-dwelling) buildings of any number of stories (Group R-3) All multifamily buildings with three or fewer habitable stories (Groups R-1 and R-2) Additions and alterations to all of the above buildings. Lighting requirements for living quarters in high-rise multifamily buildings (over 3 stories) and water heating requirements for high rise multifamily buildings (over 3 stories)	Includes: Offices Retail and wholesale stores Grocery stores Restaurants Assembly and conference areas Industrial work buildings Commercial or industrial storage Schools and churches Theaters Hotels and motels Apartment and multifamily buildings with four or more habitable stories (envelope and HVAC requirements) Long-term care facilities (group R-2) with four or more habitable stories Dormitories or other congregate residences, or any building with dormitory-style sleeping quarters, with six or more “guest rooms” Private garages, carports, sheds, and agricultural buildings.

1.5.4 Historical Buildings

Exception 1 to §100.0(a)

Exception 1 to §100.0(a) states that qualified historic buildings, as regulated in the California Historical Building Code (Title 24, Part 8) or California Building Code, Title 24, Part 2, Volume I, Chapter 34, Division II are not covered by the Building Energy Efficiency Standards. §140.6(a)3 clarifies that lighting systems in qualified historic buildings are exempt from the lighting power allowances only if they consist solely of historic lighting components or replicas of historic lighting components. If lighting systems in qualified historic buildings contain some historic lighting components or replicas of historic components, combined with other lighting components, only those historic or historic replica components are

exempt. All other lighting systems in qualified historic buildings must comply with the Building Energy Efficiency Standards.

The California Historical Building Code (CHBC) Section 8-102.1.1 specifies that all non-historical additions must comply with the regular code for new construction, including the Building Energy Efficiency Standards. CHBC Section 8-901.5 specifies that when new or replacement mechanical, plumbing, and electrical (including lighting) equipment or appliances are added to historic buildings they should comply with the Building Energy Efficiency Standards, including the Appliance Efficiency Regulations.

The California State Historical Building Safety Board has final authority in interpreting the requirements of the CHBC and determining to what extent the requirements of the Building Energy Efficiency Standards apply to new and replacement equipment and other alterations to qualified historic buildings. It should be noted that in enacting the State Historical Building Code legislation, one of the intents of the Legislature was to encourage energy conservation in alterations to historic buildings (Health and Safety Code Section 18951).

Additional information about the CHBC can be found on the following web site:

http://www.dgs.ca.gov/dsa/AboutUs/shbsb.aspx

Or, contact the SHBSB at (916) 445-7627.

Example 1-1

Question

Are additions to historical buildings also exempt?

Answer

If the addition adjoins the qualified historic building, then the enforcement agency at their discretion may exempt those measures which they determine could damage the historic value of the building. However, “additions which are structurally separated” from the historical building are not exempt from the Energy Efficiency Standards and must comply with building codes including the Historical Building Code, Title 24, Part 8, Section 8-704.

Example 1-2

Question

A sunspace addition is designed with no mechanical heating or cooling and a glass sliding door separating it from all existing conditioned space. Under what conditions will the Standards not apply to this addition?

Source: CEC Photographer: Andersen Windows

Answer

The mechanical and envelope requirements of the Standards do not apply if a building inspector determines that the space is unconditioned. Whether conditioned or unconditioned, per §100.0(c)2, the sunspace must still comply with the applicable lighting requirements of §150.0(k). The sunspace is unconditioned if:

•The new space is not provided with heating or cooling (or supply ducts); or

•The new space can be closed off from the existing house with weather stripped doors; or

•The addition is not indirectly conditioned space.

A building official may require a sunspace to be conditioned if it appears to be habitable space, in which case the Standards would apply.

1.5.5 Exempt Buildings

The following building types are exempt from the prescriptive and performance standards:

A. Seasonally occupied agricultural housing limited by state or federal agency contract to occupancy not more than 180 days in any calendar year

(EXCEPTION 1 to §100.0(e)2D); however, these buildings must comply with the applicable mandatory requirements.

B. Low-rise residential buildings that use no energy obtained from a depletable source for either lighting or water heating and obtain space heat from wood heating or other non-mechanical system: however, these buildings must comply with the applicable mandatory requirements .

C. Based on discretion of building officials, temporary buildings, temporary outdoor lighting or temporary lighting in an unconditioned building, or structures erected in response to a natural disaster (EXCEPTION 2 to §100.0(a)). These buildings may also be exempt from the mandatory and prescriptive requirements of the Standards.

1.5.6 Building Systems Covered

The low-rise residential standards affect the design of the building envelope; the heating, ventilation and air conditioning (HVAC) system; the water heating system; and the lighting system. The Standards do not apply to residential appliances (Appliance Efficiency Regulations may apply), elevators or dumbwaiters, or to portable lighting systems that are plugged into a wall outlet. Only hardwired lighting is regulated, which includes lighting that is a permanent part of the building.

1.5.7 Additions, Alterations and Repairs

- *§100.1(b)*
- *§150.2(a)*
- *§150.2(b)*

Additions, alterations, and repairs are common construction projects for California homeowners. The Standards apply to both additions and alterations, but not to repairs. See Chapter 9 for details.

A. **Additions** are changes to an existing building that increase both conditioned floor area and volume.

B. **Alterations**, that are not additions, are changes to a building's envelope, space conditioning system, water heating system or lighting system.

C. **Repairs** are the reconstruction or renewal of any part of an existing building for the purpose of its maintenance and are not under the scope of the Standards. Replacement of any component systems (i.e. re-roofing), or equipment for which there are requirements in the Standards is considered an alteration and not a repair.

Example 1-3

Question

The Standards do not specify whether buildings damaged by natural disasters can be reconstructed to their original energy performance specifications. What requirements apply under these circumstances?

Answer

Buildings destroyed or damaged by natural disasters must comply with the energy code requirements in effect when the builder or owner applies for a permit to rebuild for those portions of the building that are being rebuilt.

Example 1-4

Question

Do the Standards apply to an addition to a manufactured ("mobile") home?

Source: CEC Photgrapher: Brian Vahey

Answer

No. Title 25 requirements, not Title 24, govern manufactured homes, including additions to the unit. Jurisdiction in a mobile home park comes under the authority of the Department of Housing and Community Development. Jurisdiction of a mobile home on private property may come under the authority of the local building department.

Example 1-5

Question

Three stories of residential dwelling units are planned over a first story that includes retail and restaurant occupancies. Should the residential apartments comply with the Residential Standards?

Answer

No. The building envelope and HVAC equipment must comply with the nonresidential (high-rise residential) standards since the structure contains four habitable stories and, as a whole structure, is a high-rise building. The dwelling units, however, must comply with the lighting and water heating requirements for low-rise residences.

Example 1-6

Question

A four-story single-family townhouse (with no shared walls) has been constructed. Should the townhouse comply with the low-rise residential standards?

Answer

Yes. As a group R-3 occupancy, the low-rise residential standards apply. The building is not an apartment house (which, according to the CBC, must be at least three dwelling units).

Example 1-7

Question

A 2,100 ft² manager's residence is being constructed as part of a new conditioned warehouse building with 14,000 ft². Which standards apply?

Answer

The whole building can comply with the nonresidential standards, and the residential unit is not required to comply separately since it is a subordinate occupancy containing less than 20% of the total conditioned floor area. However, the residential dwelling unit must meet all low-rise residential mandatory measures as well as the lighting and water heating requirements.

Example 1-8

Question

Assume the same scenario as in the previous example, except that the dwelling unit is new and the remainder of the building is existing. Do the residential standards apply?

Answer

Yes. Since 100% of the addition being permitted is a low-rise residential occupancy, compliance under the residential standards is required.

Example 1-9

Question

A residence is being moved to a different location. What are the applicable compliance requirements?

Answer

Because this is an existing conditioned space, the requirements applicable to alterations would apply to any alterations being made. The building does not need to show compliance with the current energy standards applicable to new buildings or additions.

Example 1-10

Question

A previously conditioned retail space is remodeled to become a residential dwelling. What are the applicable compliance requirements?

Answer

The residential dwelling is treated as if it were previously a residential occupancy. In this case, the rules that apply to residential alterations are applied.

Example 1-11

Question

A 10,000 ft², 16-unit motel is constructed with an attached 1,950 ft² manager's residence. What are the applicable compliance requirements?

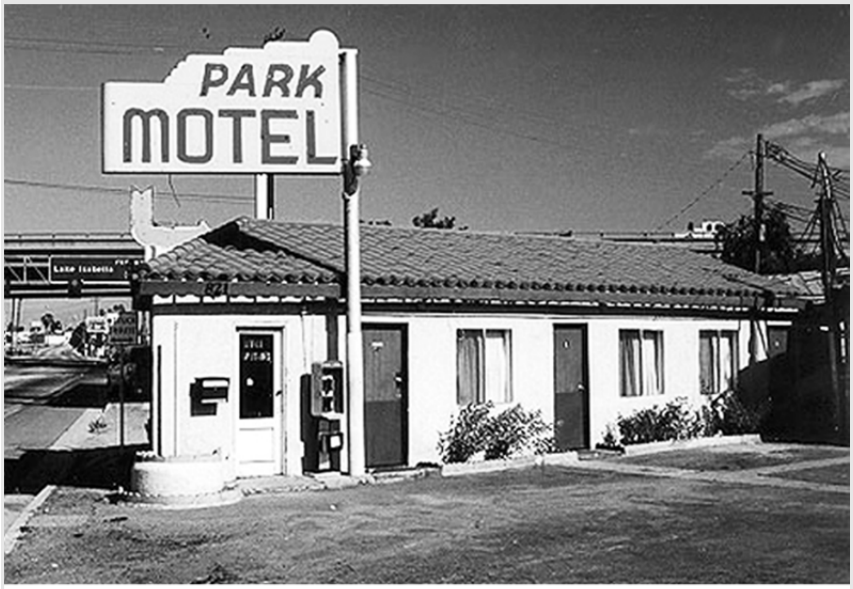

Source: http://www2.sjsu.edu/faculty/wooda/calpark.jpeg

Answer

The manager's unit is less than 20% of the total floor area, so compliance of the whole building as the predominant motel occupancy would satisfy the requirements of the Standards. Either the entire building must comply with the nonresidential (high-rise residential and hotel/motel) standards; or the manager's residence must comply with the low-rise residential standards and the motel occupancy portion of the building must comply with the nonresidential standards.

Example 1-12

Question

A subdivision of detached homes includes several unit types, each of which may be constructed in any orientation. What are the applicable compliance requirements?

Answer

The low-rise residential standards are applied to each building type. All four cardinal orientations may be shown to comply or each individual unit in its planned orientation must comply.

Example 1-13

Question

A four-story apartment building has three stories of apartments and a garage on the first floor. What are the applicable compliance requirements?

Answer

For Standards compliance, the low-rise residential standards apply since the building has fewer than four habitable stories. However, for the purpose of other non-energy codes and standards this may be considered a four-story building.

Example 1-14

Question

If in Example 1-13 above, there was a small air conditioned elevator lobby at the garage floor, what would be applicable compliance requirements?

Answer

§100.1 defines a habitable story as a story that contains space in which humans may work or live in reasonable comfort, and that has at least 50 percent of its volume above grade. The small elevator lobby does not meet this definition for habitable story and therefore the low-rise residential standards still apply.

Example 1-15

Question

If in Example 1-13 above, there was a receptionist station in the conditioned elevator lobby at the garage floor, what would be the applicable compliance requirements?

Answer

In this case the lobby with the receptionist meets the habitable story definition of §100.1 and therefore the building must be considered a high-rise residential occupancy. The building envelope and HVAC equipment must comply with the nonresidential (high-rise residential) standards, and the dwelling units must comply with the lighting and water heating requirements for low-rise residences.

1.6 Mandatory Measures and Compliance Approaches

In addition to the mandatory measures (Section 1.6.2), the Standards provide two basic methods for complying with low-rise residential energy budgets: the prescriptive approach and the performance approach. The mandatory measures must be installed with either of these approaches, but note that mandatory measures may be superseded by more stringent measures under either approach.

1.6.1 Approaches

A. The **prescriptive approach**, composed of a climate zone dependent prescriptive package (Section 1.6.3), is less flexible but simpler than the performance approach (Section 1.6.4). Each individual energy component of

B. the proposed building must meet a prescribed minimum efficiency. The prescriptive approach offers relatively little design flexibility but is easy to use. There is some flexibility for building envelope components, such as walls, where portions of the wall that do not meet the prescriptive insulation requirement may still comply as long as they are area-weighted with the rest of the walls, and the average wall performance complies.

C. The **performance approach** (Section 1.6.4) is more complicated but offers considerable design flexibility. The performance approach requires an approved computer software program that models a proposed building, determines its allowed energy budget, calculates its energy use, and determines when it complies with the budget. Compliance options such as window orientation, shading, thermal mass, zonal control, and house configuration are all considered in the performance approach. This approach is popular with production home builders because of the flexibility and because it provides a way to find the most cost-effective solution for complying with the Standards.

For additions and alterations, see Chapter 9 for details of compliance approaches that are available.

1.6.2 Mandatory Measures

With either the prescriptive or performance compliance paths, there are mandatory measures that must always be installed. Many of the mandatory measures deal with infiltration control and lighting; others require minimum insulation levels and equipment efficiency. New for the 2013 Building Energy Efficiency Standards are mandatory measures that require HERS verification for duct sealing and leakage, HVAC system airflow and fan efficacy, and ventilation systems (including exhaust fans) installed to meet the requirements of ASHRAE Standard 62.2. The minimum mandatory levels are sometimes superseded by more stringent prescriptive or performance approach requirements. For example, if mandatory measures specify R-30 ceiling insulation and the prescriptive approach, Package A, is used, R-38 ceiling insulation (depending on climate zone) must be installed. Conversely, the mandatory measures may be of a higher efficiency than permitted under the performance approach; in these instances, the higher mandatory levels must be installed. For example, a building may comply using the performance computer modeling only R-7 insulation in a raised floor, but R-19 must be installed because that is the mandatory minimum.

1.6.3 Prescriptive Package A - §150.1(c)

The prescriptive requirements are represented in Package A. The prescriptive package is the simplest but least flexible compliance path. Package A establishes the stringency of the Standards for the performance approach. Approved computer programs model a house with the features of Package A to determine the envelope, space conditioning, and water heating budgets.

The prescriptive package is a set of pre-defined performance levels for various building components. Each building component must meet or exceed the

minimum efficiency level specified in the package. For the 2013 Standards, there is only one prescriptive package: Package A. Packages C and E were eliminated in the 2013 Standards and Package D has been renamed as Package A.

A. Package A is presented in Table 150.1-A (and its footnotes) in the Standards (also in Appendix B of this document). Package A. The Package A prescriptive requirements serve as the basis of the standard design in the performance approach and determine the energy budget of a proposed design. These prescriptive requirements require that ducted split system and packaged air conditioners or heat pumps (for definition see Reference Joint Appendix JA1) be diagnostically tested to verify that they have the correct refrigerant charge.

1.6.4 Performance Approach

The performance approach, also known as the computer method, requires that the annual Time Dependent Valuation (TDV) energy be calculated for the proposed house and compared to the standard TDV energy budget. TDV energy is the “currency” for the performance approach. TDV energy not only considers the type of energy that is used (electricity, gas, or propane), but also when it is used. Energy saved during periods when California is likely to have a statewide system peak is worth more than energy saved at times when supply exceeds demand. Reference Joint Appendix JA3 has more information on TDV energy.

The use of Energy Commission approved computer methods represents the most detailed and sophisticated method of compliance. While this approach requires the most effort, it also provides the greatest flexibility. The computer program automatically calculates the energy budget for space conditioning and water heating. The budget is determined from the standard design, a computer model of the building using the Package A prescriptive package. The computer software allows manipulation of the proposed building’s energy features to achieve or do better than the standard energy budget; i.e. the building proposed energy consumption would be equal to or less than the standard energy budget.

1.7 Climate Zones

To standardize calculations and to provide a basis for presenting the prescriptive requirements, the Energy Commission has established a set of standard climate data for each of the 16 climate zones. More information is provided in *Reference Joint Appendix JA2*, including a listing of climate zones for all California zip codes. *Reference Joint Appendix JA2* gives other climate information such as design temperatures for sizing HVAC equipment. The climate zone definitions and data are the same for both the low-rise residential and the nonresidential standards.

Beginning with the 2013 Standards, zip code boundaries are used to define climate zone boundaries; under the new rules, a given zip code is alway located entirely within a single climate zone.

Figure 1-1 – California Climate Zones

1.7.1 Building Location Data

Building location data refers to specific outdoor design conditions used in calculating heating and cooling loads. Different from the climate zone used for compliance (see *Climate Zones* above), design data includes the typically warmest and coolest outdoor temperatures that a building is likely to experience in an average year in its particular location.

Temperatures are from the ASHRAE publication, *SPCDX, Climatic Data for Region X - Arizona, California, Hawaii, Nevada*, May 1982 edition (see Appendix C). For heating, the outdoor design temperature is the Winter Median of Extremes. A higher temperature is permitted, but no lower than this value. For cooling, the outdoor design temperatures must be the 1.0 percent Summer Design Dry Bulb and the 1.0 percent Wet Bulb columns.

If a building location is not listed, the local enforcement agency may determine the location for which data is available that is closest in its design characteristics to the actual building site.

1.8 Conditioned Floor Area

Conditioned floor area (CFA) is the total floor area (in square feet) of enclosed conditioned space on all floors of a building, as measured at the floor level of the exterior surfaces of exterior walls enclosing the conditioned space. [§100.1] This term is also referred to in the Standards simply as the floor area.

This is an important value for the purpose of compliance since annual energy use is divided by this value to obtain the energy budget. In the prescriptive package, the maximum fenestration and west facing fenestration area requirements are expressed as a percentage of this value.

CFA is calculated from the plan dimensions of the building, including the floor area of all conditioned and indirectly conditioned space on all floors. It includes lofts and mezzanines but does not include covered walkways, open roofed-over areas, porches, pipe trenches, exterior terraces or steps, chimneys, roof overhangs, or parking garages. Unheated basements or closets for central gas forced air furnaces are also not included, unless shown to be indirectly conditioned.

The floor area of an interior stairway is determined as the CFA beneath the stairs and the tread area of the stairs themselves.

See Figure 1-2 for an example of how CFA is calculated.

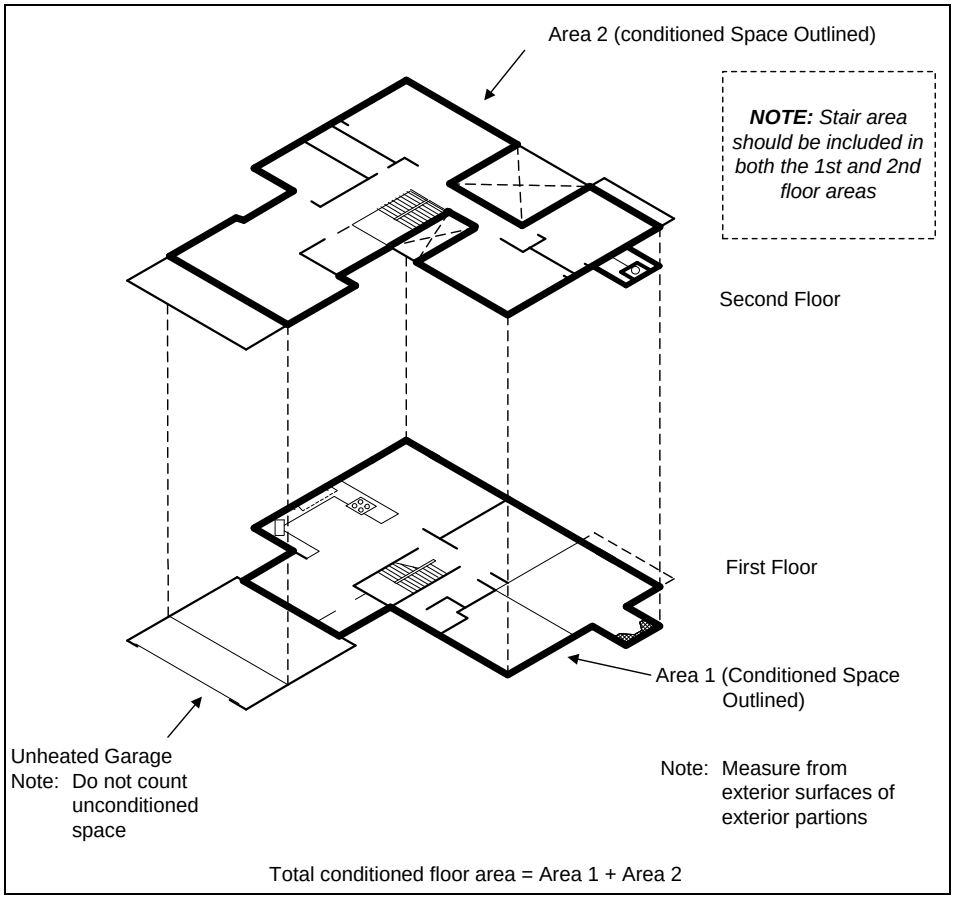

Figure 1-2 – Total Conditioned Floor Area

1.9 Where to Get Help

The Energy Commission has a number of resources to help designers, builders, homeowners and others understand and apply the Standards.

1.9.1 Energy Commission Publications and Support

A. Telephone Hotline

If the information contained in the Standards or this compliance manual are not sufficient to answer a specific question concerning compliance or enforcement, technical assistance is available from the Energy Standards Hotline.

You can reach the Energy Standards Hotline on weekdays from 8 a.m. – noon and 1 p.m. – 4:30 p.m.:

(800) 772-3300

(916) 654-5106

B. Publications

Publications, including the 2013 Building Energy Efficiency Standards, the *2013 Reference Appendices*, and the *2013 Residential ACM Approval and Reference Manuals,* and others are available from the Energy Commission's website at http://www.energy.ca.gov/title24. Paper copies may also be ordered from:

Publications Unit

California Energy Commission

1516 Ninth Street, MS-13

Sacramento, CA 95814

(916) 654-5200

C. Blueprint

The Energy Commission publishes the Blueprint, a quarterly newsletter that answers questions and addresses issues related to enforcement and compliance. The Blueprint also provides updated information on technical assistance and computer compliance programs and lists of training opportunities offered throughout the state. The Blueprint is available online at http://www.energy.ca.gov/efficiency/blueprint.

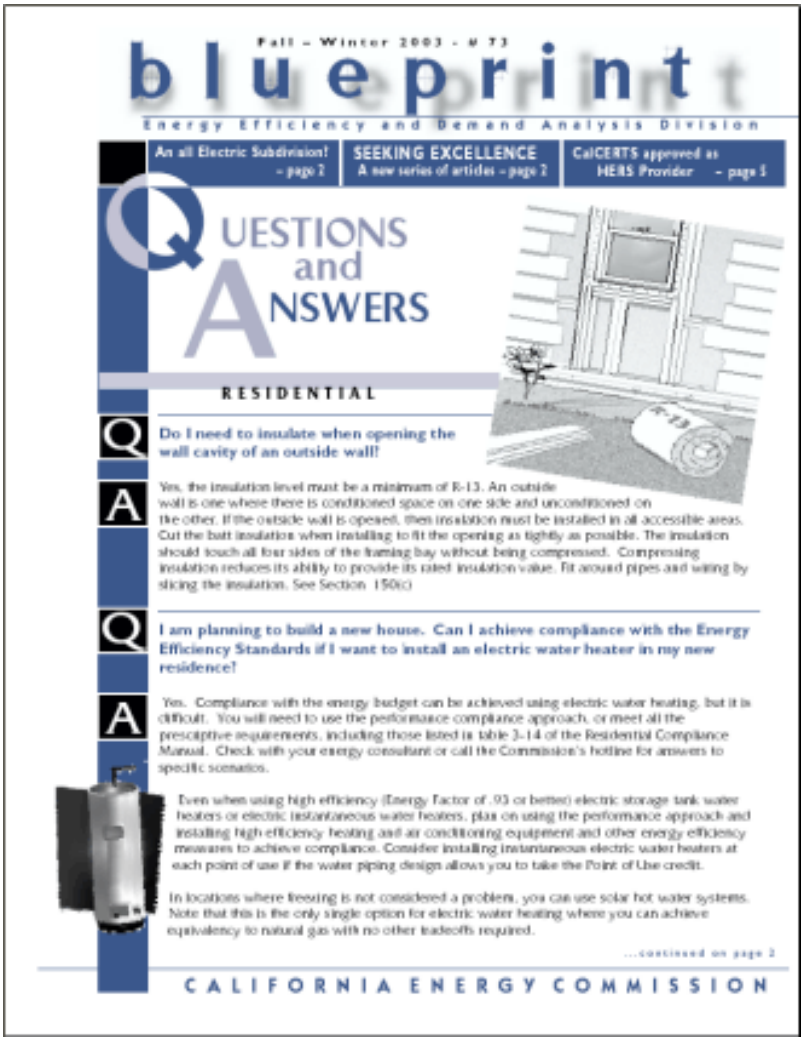

Fall – Winter 2003 - # 73

blueprint

Energy Efficiency and Demand Analysis Division

An all Electric Subdivision! – page 2

SEEKING EXCELLENCE A new series of articles – page 2

CalCERTS approved as HERS Provider – page 3

QUESTIONS and ANSWERS

RESIDENTIAL

Q Do I need to insulate when opening the wall cavity of an outside wall?

A Yes, the insulation level must be a minimum of R-13. An outside wall is one where there is conditioned space on one side and unconditioned on the other. If the outside wall is opened, then insulation must be installed in all accessible areas. Cut the batt insulation when installing to fit the opening as tightly as possible. The insulation should touch all four sides of the framing bay without being compressed. Compressing insulation reduces its ability to provide its rated insulation value. Fit around pipes and wiring by slicing the insulation. See Section 150(c)

Q I am planning to build a new house. Can I achieve compliance with the Energy Efficiency Standards if I want to install an electric water heater in my new residence?

A Yes. Compliance with the energy budget can be achieved using electric water heating, but it is difficult. You will need to use the performance compliance approach, or meet all the prescriptive requirements, including those listed in table 3-14 of the Residential Compliance Manual. Check with your energy consultant or call the Commission's hotline for answers to specific scenarios.

Even when using high efficiency (Energy Factor of .93 or better) electric storage tank water heaters or electric instantaneous water heaters, plan on using the performance approach and installing high efficiency heating and air conditioning equipment and other energy efficiency measures to achieve compliance. Consider installing instantaneous electric water heaters at each point of use if the water piping design allows you to take the Point of Use credit.

In locations where freezing is not considered a problem, you can use solar hot water systems. Note that this is the only single option for electric water heating where you can achieve equivalency to natural gas with no other tradeoffs required.

...continued on page 2

CALIFORNIA ENERGY COMMISSION

Figure 1-3 – Energy Commission Blueprint Newsletter

D. Appliance Standards

Appliances, as defined by the Energy Commission, include everything from dishwashers and refrigerators to air conditioners and boilers. The performance of some appliances, such as air conditioners, water heaters, and furnaces, is critical to the building energy efficiency standards. The energy efficiency of other appliances such as refrigerators, dishwashers, and clothes dryers is important to homeowners, but does not affect the building energy efficiency standards, since these are considered home furnishings.

The Energy Commission has comprehensive standards that affect the performance of many appliances. These are published in the 2012 Appliance Efficiency Regulations, CEC-400-2010-012. This document is available from the Energy Commission website at http://www.energy.ca.gov/appliances/ or can be ordered from the Energy Commission Publications Unit (see contact information above).

E. Appliance Directories

The Energy Commission publishes information on the energy efficiency of appliances. Energy Commission approved directories can be used to determine if appliances meet the mandatory measures and/or the prescriptive requirements. Data may also be used in performance calculations. The Energy Standards Hotline can verify certification of appliances and provide information on appropriate directories.

The complete appliance database (including manufacturer, brand codes, rated efficiencies, etc.) can be searched from the Energy Commission's website at:

http://www.appliances.energy.ca.gov/

F. Directory of Certified Insulation Materials

Manufacturers whose insulating materials are certified for sale in California are listed in the Department of Consumer Affair's *Consumer Guide and Directory of Certified Insulation Material*. Each building department receives a copy of this directory. If an insulating product is not listed in the directory, or to purchase a directory, contact the Department of Consumer Affairs, Bureau of Electronic Appliance and Repair, Home Furnishings and Thermal Insulation (BEARHFTI), at (916) 999-2041.

1.9.2 Training Opportunities

If you are interested in attending a training seminar on the Standards, sign up to receive a free subscription to the *Blueprint*.

Some colleges provide classes on building energy conservation and the Standards. Information about these classes should be obtained directly from the college.

California utilities, organizations of energy consultants, building industry, trade associations, and organizations that serve building officials often sponsor or conduct classes on compliance and enforcement of the Title 24 Building Energy Efficiency Standards. These classes are often listed in the *Blueprint* or posted on the Energy Commission's website at http://www.energy.ca.gov/title24.

1.9.3 Energy Consultants

The California Association of Building Energy Consultants (CABEC) maintains a directory of consultants who provide compliance assistance. The listing is available at http://www.cabec.org.

1.9.4 Online Videos

The Energy Commission has a series of streaming videos (see Table 1-3 below) that explain energy efficiency concepts and the application of the standards. These videos cover topics including plan checking, field inspection, HVAC, HERS, water heating, building envelope, and renewable energy. They can be viewed at http://www.energyvideos.com.

Figure 1-4 – Energy Commission Video Series

More than 100 videos produced by the Energy Commission include discussions, instructions, resources, and requirements for building residential structures.

1.9.5 HERS Raters and Providers

To achieve compliance with the Standards, some buildings require third-party diagnostic testing or field verification of energy efficient systems or devices. HERS (Home Energy Rating System) raters are required to be hired by the builder or building owner to perform this work. Installing contractors may hire the HERS rater for HVAC changeouts only if the homeowner agrees that the installing contractor may do so on their behalf. The Energy Commission approves HERS providers who train, certify, and monitor HERS raters. For a list of the current HERS providers, please go the Energy Commission website at: http://www.energy.ca.gov/HERS/. To find a rater, go to the website of the approved HERS provider available on the Energy Commission's website at the link above, or contact the Energy Standards Hotline at (800) 772-3300 (for calls within California) or (916) 654-5106 for assistance.

Table 1-3 – Energy Commission Video Series Titles

Area	Topic	Content
Plan Checking	The Plan Checking Process The Plan Checking Process - Mandatory Measures Total Energy Inspection - Pt. 1 Total Energy Inspection - Pt. 2 The Inspection Process - Foundations The Inspection Process - Framing	The Inspection Process - Final Inspection CABEC Certified Energy Analysts Water Heating Overview for Inspectors Kitchen and Bath Lighting Energy Budget vs. Mandatory Measures
HERS Providers and Raters (T-24)	Blower Door California Home Energy Efficiency Rating System	HERS Rater Code Enforcement
Space Heating and Cooling	Overview Duct Sealing Duct Design Duct Sealing with Duct Tape Energy Code Requirements HVAC Lineset Insulation TXV - Proper sizing of A/C units and ducts TXV - Proper installation of A/C units and airflow	TXV - Proper charge for A/C units TXV -Title 24 and AB 970 compliance Title 24 Zonal Control HVAC Zoning for Comfort and Energy Savings Exhaust Ventilation Systems Overview of Exhaust Ventilation Exhaust Ventilation Energy Code Requirements
Water Heating	Code: Gas Water Heaters Gas Water Heating Overview for Inspectors Overview Installation	Consumer Energy Rebate Program AB-970 Gas Tankless Water Heaters - Overview Gas Tankless Water Heaters - Installation
Building Envelope	Energy Code Requirements - Fiberglass Cellulose Insulation - Overview Cellulose Insulation - Insulating Walls Cellulose Insulation - Insulating Ceilings Fiberglass Insulation - Overview and Insulating Ceilings Fiberglass Insulation - Ceiling Insulation Details Fiberglass Insulation - Installing Ductboard Fiberglass Insulation - Insulating Walls Fiberglass Insulation - Wall Insulation Details Spray Foam Insulation Structural Insulated Panels	Fenestration - Energy Code Requirements Overview of Low-e Windows Manufacturing Low-e Glass Energy Performance Area of Glass - Impact on Compliance with Title 24 Window Sizing Window Performance Housewrap - Overview Installing an Air Barrier Air Barrier Details Energy Code Requirements Radiant Barriers - Overview Installing Flexible Radiant Barriers Installing Radiant Barrier Sheathing Radiant Barrier Energy Code Requirements
Renewable Energy	Overview of Photovoltaic Technology Installing a Photovoltaic System Renewable Energy Rebates	Renewable Energy: Wind Renewable Energy: Residential Wind Generation
Beyond the Code	Major West Coast Builder Finds Profitable New Market The Building Science of It Energy Consultants: Building Better, Selling Faster Why it is Profitable as a Marketing Strategy	Biggest Production Builder Leads the Way HVAC Diagnostics Mold in Buildings Preventing Mold in Buildings
Additions and Alterations	Perspectives on Residential Additions Title 24: Residential Additions Title 24: Residential Alterations	

2. Compliance and Enforcement

2.1 Overview

The primary responsibility for compliance with and the enforcement of the Energy Commission's Building Energy Efficiency Standards rests with the local enforcement agency, typically associated with a city or county government. Low-rise residential buildings must obtain a permit from the local enforcement agency before a new building may be constructed, before constructing an addition, and before alterations are made to existing buildings. Before a permit is issued, the local enforcement agency examines the plans and specifications for the proposed building to verify compliance with all applicable codes and standards. Verification of compliance with the Building Energy Efficiency Standards, which is done by comparing the requirements specified on the Certificate of Compliance (CF1R) with the plans and specifications for the building, is the enforcement agency's plan check responsibility. The enforcement agency's plans examiner must also verify that the plans and specifications for the building are in compliance with the building code, plumbing code, electrical code, mechanical code, and all other applicable codes and standards adopted by the local enforcement agency.

Once the enforcement agency has determined that the proposed building (as represented in the plans and specifications) complies with all applicable codes and standards, a building permit may be issued at the request of the builder or the owner of the proposed building. This is the first significant milestone in the compliance and enforcement process. Once construction starts, the enforcement process begins for the Inspector who will verify that the installed building components (HVAC equipment, fenestration, lighting, insulation, etc.) match the energy components modeled on the Certificate of Compliance (CF1R) during each respective phase of construction (i.e. footing/foundation, rough frame, insulation, etc.). After building construction is complete, the local enforcement agency completes the final inspection and issues the Certificate of Occupancy. If the enforcement agency's final inspection determines that the building conforms to the plans and specifications approved during plan check, that all applicable Certificates of Installation (CF2R) and Certificates of Verification (CF3R) forms are registered and submitted for verification, and that it complies with all applicable codes and standards, the enforcement agency may approve the building. The enforcement agency's final approval is also a significant milestone.

While the permit and the Certificate of Occupancy are the most significant milestones, the compliance and enforcement process is significantly more involved and requires participation by a number of other persons and organizations including the architect or building designer, specialty engineers (mechanical, electrical, civil, etc.), energy

consultants, contractors, the owner, third party inspectors (HERS raters), and many others.

This chapter describes the overall compliance and enforcement process, and it identifies the responsibilities for each person or organization throughout the permit process.

2.1.1 Compliance Document Registration

§10-103

Reference Residential Appendix RA2 ; Reference Joint Appendix JA7

New requirements for a documentation procedure called *registration* were introduced beginning with the 2008 Building Energy Efficiency Standards. *Registration* documentation is required for the construction and alteration of residential buildings for which HERS verification is required for compliance. *Registration* requirements will be described in this chapter, and elsewhere in this manual, as applicable. Also, *Reference Residential Appendix RA2 and Reference Joint Appendix JA7* provide detailed descriptions of document registration procedures and individual responsibilities for registration of Certificate(s) of Compliance (CF1R), Certificate(s) of Installation (CF2R), and Certificate(s) of Verification (CF3R).

Registration will be required for all low-rise residential buildings for which compliance requires HERS field verification. For the 2013 Building Energy Efficiency Standards, mandatory HERS verification will be required, with some exceptions, for all newly constructed residential buildings, so registration will be required for majority of these building types. When *registration* is required, persons responsible for completing and submitting compliance documents (Certificate of Compliance, Certificate of Installation, and Certificate of Verification) are required to submit the compliance form(s) electronically to an approved HERS provider data registry for registration and retention.

Compliance documents submitted to the registry shall be certified by the applicable responsible person (§10-103). The registry will assign a unique *registration* number to the document(s), provided the documents are completed correctly and a certification/signature is provided by the responsible person. The "registered" document will be retained by the HERS provider data registry, and copies of the unique registered document(s) will be made available via secure internet website access to authorized users of the HERS provider data registry for use in making electronic or paper copies of the registered document(s) for submittals to the enforcement agency as required, and for any other applicable purposes such as posting copies in the field for enforcement agency inspections and providing copies to the building owner (see Section 2.2.9).

Examples of authorized users of the HERS provider data registry may include energy consultants, builders, building owners, construction contractors and installers, HERS raters, enforcement agencies, the Energy Commission, and other parties to the compliance and enforcement process that the documents are designed to support. Authorized users of the registry will be granted read/write access rights to only the electronic data that pertains to their project(s).

NOTE: Documents submitted to public agencies for code compliance are considered public information.

2.2 Compliance and Enforcement Phases

The process of complying with and enforcing the Building Energy Efficiency Standards in residential buildings involves many parties. Those involved may include the architect or designer, builder/developer, purchasing agent, general contractor, subcontractor/installer, energy consultant, plan checker, inspector, realtor, and owner/first occupant. All of these parties must communicate and cooperate in order for the compliance and enforcement process to run efficiently.

The standards specify detailed reporting requirements that are intended to provide design, construction, and enforcement parties with required information to complete the building process and ensure that the energy features are properly installed. Each party is accountable for ensuring that the building's energy features are correctly installed in their area of responsibility. This section outlines each phase of the process, and discusses responsibilities and requirements associated with them.

The Energy Compliance documentation has been revised and reorganized. Versions of the Certificate of Compliance have been designed to be used specifically with Residential New construction (CF1R), Residential Additions (CF1R-ADD), Residential Alterations (CF1R-ALT), and Residential HVAC change-outs (CF1R-ALT-HVAC). The Certificate of Installation (CFR) is separated into Envelope (CF2R-ENV), Lighting (CF2R-LTG), and Mechanical (CF2R-MECH) categories, and most compliance measures have a separate CF2R form that is specific to a particular installation. CF2R forms also incorporate references to applicable mandatory measures. The HERS Certificate of Verification (CF3R) forms are categorized and organized in the same way as the Certificate of Installation (CF2R) forms. Refer to Appendix A of this manual for more information about the forms, or to view samples of the forms. Additional information about use of the compliance forms will be provided in applicable sections of this chapter and throughout this manual.

The Building Energy Efficiency Standards require residential energy compliance documents to be *registered* with a HERS provider data registry prior to submittal to an enforcement agency when HERS verification is required for compliance. The registration of documents prior to submittal to an enforcement agency accomplishes retention of a completed and signed copy of the submitted energy compliance documentation. Section 10-103 of the Building Energy Efficiency Standards allows

the registered CF1R-ALT-HVAC form to be submitted to an enforcement agency at final inspection, and not before obtaining a permit, to facilitate the permit process for HVAC change-outs. Refer to Chapter 9 of this manual for more details. Document retention is vital to compliance and enforcement follow-up and other quality assurance follow-up processes that ensure realization of energy savings from installed energy features. Although some local enforcement agencies elect to retain copies of submitted residential energy compliance documents, many jurisdictions do not retain these documents. Thus, the Energy Standards requirement for registration of the energy compliance documentation in a HERS provider data registry ensures that document retention is accomplished for the residential construction projects that require HERS verification for compliance. General information describing registration procedures that are specific to the design, construction and inspection phases follow in this chapter. Refer also to Reference Residential Appendix RA2 and Reference Joint Appendix JA7 for more detailed descriptions of these document *registration* procedures that apply to each phase of the building energy code compliance and enforcement process.

2.2.1 Design Phase

§10-103(a)2

This phase sets the stage for the type and style of building to be constructed. In addition to issues concerning zoning, lot orientation and infrastructure, the building's overall design and energy features are documented in the construction documents and/or specifications. Parties associated with this phase must ensure that the building complies with the Building Energy Efficiency Standards and that the significant features required for compliance are documented on the plans and/or specifications.

During the design process, an energy consultant or other professional will typically assist the building designer by providing energy calculations that determine the impact of building features being proposed for the design to ensure that the final building design plans and specifications submitted to the enforcement agency will comply with the Building Energy Efficiency Standards. Throughout the design phase, recommendations or alternatives may be suggested by energy consultants or the documentation author to assist the designer in achieving compliance.

The building design plans submitted to the enforcement agency are required to include the specifications for the building energy features that are necessary to achieve compliance, including insulation levels, window performance, equipment performance, lighting fixture types and controls, exhaust fan performance, envelope sealing, weather stripping requirements, and any other feature that was used for compliance or is a mandatory measure. The building design plans and specifications must be consistent with respect to the energy efficiency features information on the Certificate of Compliance (CF1R) submitted to the enforcement agency. Any change in the building plans or specifications, during any phase of design or construction, that changes the energy feature specifications for the design necessitates recalculation of the building energy compliance, and issuance of a revised Certificate of Compliance

(CF1R) that is consistent with the revised plans and specifications for the proposed building. If recalculation indicates that the building no longer complies, alternate building features must be selected that bring the design back into compliance with the Building Energy Efficiency Standards.

2.2.2 Permit Application

§10-103(a)2

When the design is complete, the construction documents are prepared, and when other approvals (planning department, water, etc.) are secured, the owner or contractor makes an application for a building permit. This is generally the last step in a long process of planning and design. At this point, the infrastructure (streets, sewers, water lines, electricity, gas, etc.) is in place or is being constructed and it is time to begin the process of constructing the building(s).

To assist the enforcement agency in verifying that the proposed building complies with the Building Energy Efficiency Standards, a set of compliance documents are submitted with the building permit application. These documents consist of a Certificate of Compliance (CF1R), which is required by the Building Energy Efficiency Standards (see §10-103). The length and complexity of the documentation can vary considerably depending on: the number of buildings that are being permitted; whether or not an orientation-independent permit is being requested; whether the performance approach or the prescriptive approach is being used; and many other factors. An energy consultant who understands the code and is able to help the builder or owner comply with the standards in the most cost-effective manner often prepares the Certificate of Compliance documentation.

The Administrative Regulations §10-103(a)2 require that documentation be submitted with permit applications that will enable the plans examiner to verify the building's compliance. The forms used to demonstrate compliance must be readily legible and shall conform to a format and informational order and content approved by the Energy Commission. If registration is required, the CF1R that is submitted to the enforcement agency must be a registered copy from an approved HERS provider data registry.

The registration process requires the builder or designer to submit the Certificate of Compliance information and an electronic signature to an approved HERS provider data registry in order to produce a completed, signed and dated electronic Certificate of Compliance (CF1R) that is retained by the registry. The CF1R is assigned a unique registration number, then copies of the unique registered CF1R are made available to authorized users of the HERS provider data registry for use in making electronic or paper copies of the registered document(s) for submittal to the enforcement agency as required.

2.2.3 Plan Check

Local enforcement agencies check plans to ensure that the building design conforms to Building Standards. This includes health and safety requirements, such as fire and structural, and also the building energy efficiency requirements. Vague, missing, or incorrect information items on the construction documents are identified by the plans examiner, and when necessary, the permit applicant is required to make corrections or clarifications, then resubmit revised plans and specifications for verification by the plans examiner. When the permit applicant submits accurate, clearly defined plans and specifications, it helps to speed up the plan check process, since this provides the plans examiner with all the information that is needed to complete the plan check review. If the plans examiner must go back to the applicant to request more information, it can be a time-consuming process that would be simplified (thus completed more easily and in less time) when complete and accurate construction documents are submitted for plan check approval.

With regard to energy code concerns, from the enforcement agency's perspective, the plan checker's responsibility is to verify that the information contained on the construction documents is consistent with the requirements specified on the energy efficiency compliance documents (the CF1R). Some examples of how the plans examiner will verify that the energy efficiency features detailed on the Certificate of Compliance (CF1R) forms are specified in the respective sections of the building plans include:

- Verifying the window and skylight U-Factor and SHGC values from the CF1R on the Structural/Architecture Plans in a window/skylight schedule, window/skylight legend for the floor plan, etc.; and
- Verifying the HVAC equipment SEER, EER, AFUE, etc. efficiency values from the CF1R on the Title 24 Plans, Mechanical Plans, etc. in an Equipment Schedule.

NOTE: The enforcement agency should clearly articulate to the builder/designer the acceptable methods of specifying energy features on the building plans for approval.

Since personnel that purchase building materials, and the building construction craftsmen in the field may rely solely on a copy of the approved plans and specifications for direction in performing their responsibilities, it is of utmost importance that the building design represented on the approved plans and specifications complies with the Building Energy Efficiency Standards as specified on the Certificate(s) of Compliance (CF1R).

The enforcement agency plans examiner must also verify that the compliance documents do not contain errors. When the compliance documents are produced by Energy Commission-approved computer software applications, there is less chance that there will be computational errors, but the plans examiner must still verify that the building design represented on the plans is consistent with the building energy features represented on the Certificate of Compliance (CF1R) documents. To obtain

a list of Energy Commission-approved energy code compliance software applications, visit the Energy Commission website at:

http://www.energy.ca.gov/title24/2013standards/index.html

Or call the Efficiency Standards Hotline at 1-800-772-3300.

With production homes, where a builder may be constructing several identical houses at roughly the same time, the compliance documentation may be prepared in such a way that a house or model can be constructed in any orientation. In these instances, the Plans Examiner shall verify that the home complies facing all four main compass points (North, South, East, West) on the CF1R form.

2.2.4 Building Permit

After the plans examiner has approved the plans and specifications for the project, a building permit may be issued by the enforcement agency at the request of the builder. Issuance of the building permit is the first significant milestone in the compliance and enforcement process. The building permit is the green light for the contractor to begin the work. In some cases, the building permits are issued in phases. Sometimes there is a permit for site work and grading that precedes the permit for actual building construction.

2.2.5 Construction Phase

Upon receiving a building permit from the local enforcement agency, the contractor begins construction. The permit requires the contractor to construct the building in accordance with the plans and specifications, but often there are variations. Some of these variations are formalized through change orders. When change orders are issued, it is the responsibility of the permit applicant and the local jurisdiction to verify that compliance with the code is not compromised by the change order. In some cases, it will be quite clear if a change order would compromise compliance, for instance when an inexpensive single glazed window is substituted for a more expensive high performance window. However, it may be difficult to determine if a change order would compromise compliance; for instance, when the location of a window is changed, or when the orientation of the house is changed. Field changes that result in non-compliance require enforcement agency approval of revised plans and revised energy compliance documentation to confirm that the building is still in compliance with the Building Energy Efficiency Standards.

During the construction process, the general contractor or specialty subcontractors are required to complete various Certificate(s) of Installation (CF2R). The purpose of these certificates is to verify that the contractor is aware of the requirements of the Building Energy Efficiency Standards and that they have followed the Energy Commission-approved procedures for installation, and to identify the energy efficiencies and features of the installed building components. The Certificate(s) of Installation (CF2R) are a collection of separate energy compliance information forms

that are applicable to each regulated energy feature that may be included in the construction. The certificates are required to be completed by each of the applicable specialty contractors when they install regulated energy features such as windows, water heater and plumbing, HVAC ducts and equipment, lighting, and insulation.

The licensed person responsible for the building construction, or for installation of an energy-related feature, must ensure their construction or installation work is done in accordance with the approved plans and specifications for the building, and must complete and sign a Certificate of Installation (CF2R) to certify that the installed features, materials, components or manufactured devices for which they are responsible conform to the plans and specifications and the Certificate of Compliance (CF1R) documents approved by the enforcement agency for the building. A copy of the completed, signed and dated CF2R must be posted at the building site for review by the enforcement agency in conjunction with requests for final inspection for the building, and copies of the registered CF2R forms shall be provided to the home owner (see section 2.2.9).

When any HERS verification is required for compliance, all of the CF2R forms must be registered from an approved HERS provider data registry. This is a new requirement under the 2013 Building Energy Efficiency Standards that will apply to both non-HERS CF2R forms (i.e. CF2R-ENV-01) and to HERS CF2R forms (i.e. CF2R-MECH-20-HERS) for installed features that require field verification by a HERS rater. When registration is required, the builder or installing contractor must submit information to an approved HERS provider data registry in order to produce a completed, signed and dated electronic Certificate of Installation (CF2R) that is retained by the registry for use by authorized users of the registry. After the information to complete the CF2R document is transmitted to the data registry and the form is electronically signed, the CF2R is assigned a registration number, and copies of the unique registered CF2R are made available to authorized users of the HERS provider data registry for use in making electronic or paper copies of the registered document(s) for submittal to the enforcement agency as required. The builder or installing contractor responsible for the installation must provide a copy of the completed, signed, and registered Certificate of Installation to the HERS rater, and post a copy at the building site for review by the enforcement agency in conjunction with requests for final inspection, and provide copies of the registered CF2R forms to the home owner (see section 2.2.9).

For additional information and details regarding the registration of CF2R documents, refer to Reference Residential Appendix RA2 and Reference Joint Appendix JA7.

2.2.6 Enforcement Agency Field Inspection

§10-103(d)

Local enforcement agencie, or their representatives, inspect all new buildings to ensure compliance with the Building Standards. Field construction changes and non-complying energy features require parties associated with previous phases to repeat

and revise their original energy compliance documents, or re-install building components that meet the building specifications and energy compliance documents.

Enforcement agencies generally make multiple visits to a building site to verify construction. The first visit is typically made just before it is time to pour the slab or the building foundation. At this visit, the building inspector verifies that the proper reinforcing steel is in place and that necessary wiring and plumbing that will be embedded in the slab meets the requirements of the Standards. The inspector should verify features that are to be installed in concrete slab floors, such as slab edge insulation or hot water recirculation loops that involve piping that must be installed in the slab (see Slab Insulation in the Envelope chapter of this manual). The inspector should also verify the front orientation and floor assembly types (i.e. slab on grade, raised floor, etc.) of the building during this phase of construction. Details of how the inspector should verify these components will be discussed further in the Envelope chapter of this manual.

The second visit generally occurs after the walls have been framed, and the HVAC equipment and ducting, fenestration, lighting cans, electrical wiring, plumbing, and other services have been constructed or installed. This inspection is recommended to be made before the insulation is installed, since it is the best time to assure the completion of sealing and caulking around windows, and the caulking and sealing of any holes bored through the framing members for installation of hot and cold water piping and electrical wiring. During the rough Frame Inspection, it is also best for the inspector to verify the installation of the high efficacy lighting (or the applicable lighting control alternatives) so that the contractor has ample time to make any necessary corrections before the Final Inspection, and to avoid having to remove drywall, insulation, etc. in order to remove an incandescent can. The inspector should also verify the window/skylight U-factor and SHGC values, the proper sealing/installation of HVAC ducts and duct insulation R-value, the installation of exhaust fan housing and ducting in bathrooms and kitchens (ASHRAE 62.2.), installation of a radiant barrier and/or cool roof when required for compliance, etc. during this phase of construction. Details of how the inspector should verify these components will be discussed further in the respective chapters of this manual.

The third visit is the Insulation Inspection, which takes place after the wall, ceiling, and floor insulation has been installed. This inspection occurs before the drywall is installed to verify that the insulation R-value matches the CF1R Form, and that the insulation has been properly installed without compressions, voids, or gaps. The inspector should verify that insulation is installed correctly around and behind piping, and that all exterior walls are insulated (especially behind obstructing objects like a bathtub). Details of how the inspector should verify these components will be discussed further in the Envelope chapter of this manual.

The next visit is usually a drywall Inspection, where the inspector verifies that the drywall is installed properly to limit infiltration and exfiltration, especially at locations surrounding lighting cans, HVAC registers and vents, electrical sockets, etc.

The Final Inspection is conducted after the walls have been closed and the final electrical and plumbing fixtures are in place. The inspector should verify HVAC efficiency values, water heating efficiency values, exhaust fan cfm and sone (noise level) ratings in bathrooms and kitchens (ASHRAE 62.2), exterior lighting and controls, weatherstripping on exterior/demising doors, etc. during this phase of construction. The inspector will also verify that all required CF2R and CF3R forms have been completed, signed, and registered (when applicable), and that copies of all of these forms have been provided to the building owner. Details of how the inspector should verify these components will be discussed further in the respective chapters of this manual.

The typical enforcement agency inspection sequence can vary from jurisdiction to jurisdiction, and it can be difficult for the enforcement agency to verify every energy efficiency measure required to be installed in the building. For example, exterior wall insulation will likely not be installed at the time of the Framing Inspection, and if the enforcement agency does not include the Insulation Inspection in their field inspection process, the exterior wall insulation would be concealed from an inspector's view at the time of the Final Inspection.

For this and other reasons, the Certificate(s) of Installation (CF2R), and when required, the Certificate(s) of Verification (CF3R) are crucial. When inspection of an installed energy feature would be impossible because of subsequent construction, the enforcement agency may require the CF2R for the concealed feature to be posted at the site or made available to the inspector upon completion/installation of the feature. In these instances, in order to facilitate the inspection process, the inspector would reference the efficiency values and building components specified on the submitted CF2R form to verify compliance with the Building Energy Efficiency Standards.

When registration is required, all Certificate(s) of Installation (CF2R) must be a registered copy from an approved HERS provider data registry. For all measures requiring field verification, a registered Certificate of Verification (CF3R) shall also be made available to the building inspector.

2.2.7 Field Verification and/or Diagnostic Testing

Some building features require field verification and/or diagnostic testing completed by a third party inspector, called a HERS rater, as a condition for compliance with the Standards. The Energy Commission has established the California Home Energy Rating System (HERS) program to provide for the training and certification of HERS raters who are considered special inspectors by enforcement agencies. When compliance with the Building Energy Efficiency Standards is based on energy features that require third party (HERS) verification, a certified HERS rater is required to perform field verification and/or diagnostic testing according to the procedures in Reference Residential Appendix RA2 using the protocols specified in Reference Residential Appendix RA3.

Prescriptive Package A, as well as most performance method software applications, require some sort of field verification and/or diagnostic testing. Most of the typical measures that require HERS field verification and/or diagnostic testing involve air conditioning equipment and forced air ducts that deliver conditioned air to the dwelling. Examples of measures requiring HERS verification are refrigerant charge measurement and duct sealing.

New for the 2013 Building Energy Standards are mandatory HERS measures. Under previous Building Energy Efficiency Standards, all of the HERS requirements were prescriptive measures or compliance options. Now, the 2013 Energy Standards mandate that all newly constructed homes have duct sealing (leakage testing), duct system airflow and fan watt draw (and installed HSPP/PSPP), and exhaust fans/systems (ASHRAE 62.2.) verified by a HERS rater when those systems are installed. With that said, majority of newly constructed homes will require field verification and/or diagnostic testing by a HERS rater per the mandatory measure requirements. Details about these specific HERS measures and others will be discussed in the HVAC (Chapter 4) chapter of this manual.

Additionally, the Prescriptive HERS measure requirements for refrigerant charge testing were amended in the 2013 Building Energy Efficiency Standards for clarity. The Saturation Temperature Measurement Sensors (STMS) requirements were removed and are no longer required when refrigerant charge testing is applicable. An exception was included for the Measurement Access Holes (MAH) requirements for systems where it would be impossible to install such holes. Lastly, the refrigerant charge requirements were expanded and will be applicable to ducted packaged systems and mini-split systems. Refer to the HVAC (Chapter 4) chapter of this manual for further details.

Additional measures requiring field verification include reduced duct surface area, increased duct R-value, high EER cooling equipment, and quality installation of insulation. For a full list of measures requiring field verification and/or diagnostic testing, refer to Table RA2-1 of the 2013 Reference Residential Appendices. The requirements for field verification and/or diagnostic testing apply only when equipment or systems are installed. For example, if a house has no air distribution ducts, then a HERS rater does not have to test the ducts, since there are no ducts to test.

The HERS rater must perform field verification of the required features and transmit all required data describing the feature and the results of the verification or diagnostic test to an approved HERS provider data registry. The HERS rater must also confirm that the installed energy feature being verified is consistent with the requirements for that feature as specified on registered copies of the CF1R approved by the enforcement agency for the dwelling, and that the information on the CF2R is consistent with the CF1R. The test results reported on the CF2R by the person responsible for the installation must be consistent with the test results determined by the HERS rater's diagnostic verification and meet the criteria for compliance with the Standards. A copy of the registered CF2R must be posted at the building site for

review by the enforcement agency, and made available for all applicable inspections. A copy of the registered CF2R must also be left in the dwelling for the home owner at occupancy.

Results from the Rater's field verification or diagnostic test are reported to the HERS provider data registry regardless of whether the result indicates compliance (a “Pass” result) or not (a “Fail” result). If the results indicate compliance, the HERS provider data registry will make available a registered copy of the Certificate of Verification (CF3R). A copy of the registered CF3R must be posted at the building site for review by the enforcement agency, and made available for all applicable inspections. A copy of the CF3R must be provided to the builder, and a copy must also be left in the dwelling for the home owner at occupancy. If field verification and /or diagnostic testing indicates non-compliance (failure) of the measure being verified, that failure must be entered into the HERS provider’s data registry. HERS Providers shall not permit any user of the registry to print or access electronically CF3R forms for non-compliance (failure) entries unless the CF3R form contains a watermark with the word “FAIL” or “FAILURE” making it abundantly clear the result of the test was a failure. Corrective action shall be taken by the builder or installer on the failed measure and the measure shall be retested by the HERS rater to verify that the corrective action was successful. Once determined to be corrected, the passing measure shall be entered into the HERS provider’s data registry.

2.2.8 Approval for Occupancy

In multifamily dwellings of three or more units, the final step in the compliance and enforcement process is the issuance of an occupancy permit by the enforcement agency. This is the “green light” for occupants to move in. Single family dwellings and duplexes may be approved for occupancy without an occupancy permit being issued. Often a signed-off final inspection serves as an approval for occupancy. When HERS verification is required prior to the approval of occupancy, the HERS rater must post a signed and registered CF3R in the field for the building inspector to verify at final inspection. The HERS rater must also provide a copy of the registered CF3R to the builder, and a copy must be left in the building for the building owner at occupancy. Only registered CF3R documents are allowed for these document submittals. Handwritten versions of the CF3R are not allowed for document submittals with the 2013 Building Energy Efficiency Standards.

2.2.9 Occupancy

At the occupancy phase, the enforcement agency shall require the builder to leave inside the building all completed, signed and dated compliance documentation which includes at a minimum the CF1R and all applicable CF2R forms. When HERS field verification is required, a copy of the registered CF3R is also required to be left on site with the compliance documentation. When registration is required, the CF1R and all required CF2R compliance documentation shall be registered copies as well. The builder is required to provide the homeowner with a manual that contains instructions

for operating and maintaining the features of their building efficiently. See Section 2.3.5 for more details.

2.3 Energy Standards Compliance Documentation

Compliance documentation includes the forms, reports and other information that are submitted to the enforcement agency with an application for a building permit. It also includes documentation completed by the contractor or subcontractors to verify that certain systems and equipment have been correctly installed. It may include reports and test results by third-party inspectors (HERS raters). Ultimately, the compliance documentation is included with a homeowner's manual so that the end user knows what energy features are installed in the house.

Compliance documentation is completed at the building permit phase, the construction phase, the field verification and diagnostic testing phase, and at the final phase. The required forms and documents are shown in Table 2-1and described in the rest of this section in more detail. When registration is required, all of the compliance documentation shall be registered copies from an approved HERS provider data registry.

Table 2-1 – Documentation Requirements, Prescriptive and Performance Compliance Methods

Phase	**Method**	**Documentation Required when applicable**
Building Permit	Performance	CF1R-PRF-E, Certificate of Compliance
	Prescriptive	CF1R-NCB-01-E, Certificate of Compliance
	Prescriptive	CF1R-ADD-01-E, Certificate of Compliance (Additions less than 1,000 ft2)
	Prescriptive	CF1R-ALT02-E, Certificate of Compliance (Alterations, HVAC changeouts)
	Prescriptive	CF1R-ENV-02-E, Worksheet for area weighted average
	Prescriptive	CF1R-ENV-03-E, Worksheet for solar heat gain coefficient (SHGC)
	Prescriptive	CF1R-ENV-04-E, Worksheet for cool roofs and SRI
	Prescriptive	CF1R-SRA-01-E, Worksheet solar ready areas
	Prescriptive	CF1R-SRA-02-E, Worksheets for minimum solar zone area
	Prescriptive	CF1R-PLB-01-E, Worksheet for hydronic heating systems
	Prescriptive and Performance	CF1R-STH-02-E, Worksheet for OG 300 solar water heating systems
	Prescriptive and Performance	CF1R-STH-02-E, Worksheet for OG 100 solar water heating systems
Construction	Prescriptive and Performance	CF2R-E, Certificate of Installation
	Prescriptive and Performance	CF2R-H,HERS Certificate of Installation
	Prescriptive and Performance	FC-1, Fenestration Certificate for unrated NFRC windows

Field Verification and/or Diagnostic Testing	Prescriptive and Performance	CF3R-H, Certificate of Verification (HERS Rater)
Field Verification and/or Diagnostic Testing	Performance	CF3R-EXC-20-H, Certificate of Verification for Existing Conditions (HERS Rater)
Refer to Appendix A of this manual for a complete list and samples of all energy compliance forms.		

2.3.1 Building Permit Phase Documentation

§10-103(a)

The compliance documentation required at the building permit phase consists of the Certificate of Compliance (CF1R) on the building plans, and depending on the compliance approach, the energy compliance documentation package may also include the Thermal Mass Worksheet (WS1R), the Area Weighted Average Calculation Worksheet (WS2R), the Solar Heat Gain Coefficient (SHGC) Worksheet (WS3R), and the Solar Water Heating Calculation Form (CFSR). Blank copies of these documents are included in Appendix A of this manual for use with the prescriptive compliance requirements. When the performance approach is used, these worksheet documents are not needed since the Energy Commission-approved software performs the calculations and provides the necessary documentation as part of the software output. However, when the performance approach is used, only the CF1R forms are required on the building plans.

The purpose of the compliance documentation is to enable the plans examiner to verify that the building design shown in the plans and specifications complies with the Building Energy Efficiency Standards, and to enable the field inspector to identify which building features are required for compliance and will be verified in the field.

2.3.2 Certificate of Compliance (CF1R)

The standards require the certificate of compliance to be incorporated into the plans for the building and submitted to the enforcement agency. The CF1R form identifies the minimum energy performance specifications selected by the building designer or building owner for compliance, and may include the results of the heating and cooling load calculations.

To meet the requirement for filing a copy of the CF1R with the plans for the building, builders/contractors should ask the local enforcement agency for information about their preferences or requirements for document submittal procedures. Most local jurisdictions may require the CF1R to be embedded in the building design computer aided drafting (CAD) file for plotting on sheets that are the same size as the building design's plan set sheets, thus the CF1R documentation would be submitted as

energy compliance design sheets integral to the entire plan set for the building. On the other hand, some jurisdictions may allow taping CF1R document sheets to the submitted design drawings for the building, while others may allow simply attaching 8-1/2 inch x 11 inch printed CF1R document reports to the submitted design drawing package.

When the prescriptive approach is used for additions and alterations, a short-hand version of the certificate of compliance shall be submitted with the building plans or with the permit application when no plans are required. In these instances: a CF1R-ADD form is required to be submitted for additions; a CF1R-ALT form is required for alterations; and a CF1R-ALT-HVAC form is required for HVAC changeouts. (See Chapter 9 for more details)

For low-rise residential buildings for which compliance requires field verification, the CF1R submitted to the enforcement agency must be a registered copy, from an approved HERS provider data registry. Refer to Reference Residential Appendix RA2 and Reference Joint Appendix JA7 for more information about document registration.

2.3.3 Construction Phase Documentation (CF2R)

§10-103(a)3

The Certificate(s) of Installation (CF2R) are separated into Envelope (CF2R-ENV), Lighting (CF2R-LTG), and Mechanical (CF2R-MECH) categories, and most compliance measures have a separate CF2R form that is specific to a particular installation. The CF2R forms must be completed during the construction or installation phase of the compliance and enforcement process. The CF2R documents must be completed by the applicable contractors who are responsible for installing regulated energy features such as windows (fenestration), the air distribution ducts and the HVAC equipment, the exhaust fans/ventilation system, the measures that affect building envelope tightness, the lighting system, and the insulation. The CF2R must be posted at the job site in a conspicuous location (e.g., in the garage) or kept with the building permit and made available to the enforcement agency upon request. Certificate(s) of Installation will include, but not limited to, the following:

HVAC Systems. The contractor who installs mechanical equipment signs the applicable Certificate of Installation. Heating and cooling equipment are listed and the energy efficiency, capacity, design loads and other properties of each piece of equipment are documented.

Water Heating Systems. The Certificate of Installation includes information about the water heating equipment installed in the building, including model number, energy efficiency, tank size, input rating, tank insulation and other properties. The installer also verifies that faucets and shower heads are certified and comply with the Appliance Efficiency Regulations.

Fenestration/Glazing. The Certificate of Installation is completed and signed by the contractor responsible for installing the windows and skylights. The U-factor, SHGC,

area, number of panes, etc. for each window and skylight are documented. . The installer also verifies that all windows and skylights are installed according to the manufacture recommendations .

Insulation Certificate. The Certificate of Installation is completed and signed by the contractor responsible for installing the insulation. The manufacturer, brand, R-value, etc. of the insulation installed in the roof/ ceiling, walls, floor and slab edge are documented. The installer also verifies compliance with the applicable mandatory measures (i.e. infiltration and exfiltration) for the building envelope.

Duct Leakage and Design Diagnostics. The Certificate of Installation is signed by the contractor responsible for installing the HVAC air distribution system. The results of duct leakage diagnostic testing, which will later be verified by a third-party inspector (HERS rater), are documented on this form. The duct leakage testing requirements are a mandatory measure under the 2013 Building Energy Efficiency Standards. Refer to Chapter 4 of this manual for more details.

Refrigerant Charge and Airflow Measurement. The Certificate of Installation is signed by the contractor responsible who verifies that air conditioners and heat pumps have the correct refrigerant charge. This form contains diagnostic data that is later verified by a third-party inspector (HERS rater). The Prescriptive requirements for refrigerant charge and airflow under the 2013 Building Energy Efficiency Standards were expanded and will be applicable to ducted packaged systems and mini-split systems. See Chapter 4 of this manual for more details.

Duct Location and Area Reduction Diagnostics. The Certificate of Installation must be completed and signed by the contractor who installs the HVAC air distribution ducts. It verifies that the installed duct system conforms to the duct system design layout that was submitted to the enforcement agency at plan check. The person responsible for the duct system installation must certify on the Certificate of Installation that the installed system features, such as supply register and return grill locations, duct diameters, duct R-values and other duct system design details conform to the requirements for energy compliance credit for improved duct design, as specified on the Certificate of Compliance, approved by the enforcement agency. This form contains system features that will later be verified by a third-party inspector (HERS rater). See Chapter 4 of this manual for more details.

Exhaust Fans/Ventilation Systems. The Certificate of Installation includes information about the exhaust fans or ventilation system installed to meet the requirements of ASHRAE Standard 62.2. The airflow (cfm), sone rating, duct diameter and length for each exhaust fan are documented. Under the 2013 Energy Efficiency Standards, this form contains test results that will later be verified by a third-party inspector (HERS rater). See Chapter 4 of this manual for more details.

Building Envelope Leakage Diagnostics. The Certificate of Installation is completed by the contractor responsible for testing building envelope leakage through

pressurization of the house. This form contains test results that will later be verified by a third-party inspector (HERS rater). See Chapter 3 of this manual for more details.

Insulation Quality Checklist. The Certificate of Installation is completed and signed by the insulation contractor when compliance credit is taken for quality insulation installation. Two forms must be completed to verify the proper installation of insulation: one during the rough frame stage of construction, and the second during the insulation phase of construction. This form contains verification results that are later verified by a third-party inspector (HERS rater). See Chapter 3 of this manual for more details.

Lighting Systems. The Certificate of Installation is completed and signed by the contractor responsible for installing hard-wired lighting systems. The installer verifies compliance with the mandatory requirements for lighting, and whether high efficacy lighting or the alternate controls (occupancy sensors, dimmer switches, etc.) were installed. Kitchen lighting and cabinet lighting wattages are indicated on this form when applicable. See Chapter 6 of this manual for more details.

When field verification and/or diagnostic testing of a feature is required for compliance (as shown in the HERS Required Verification section of the CF1R), the builder or the builder's subcontractor must perform the initial field verification or diagnostic testing of the installation to confirm and document on the applicable CF2R compliance with the Standards utilizing the applicable procedures specified in Reference Residential Appendix RA3. The builder, the builder's subcontractor, or authorized representative must submit the CF2R information to an approved HERS provider data registry. All CF2R information submittals must be done electronically (registration) when HERS verification/testing is required.

HERS raters or other authorized users of the HERS provider data registry shall be allowed to facilitate the transmittal/submittal of the Certificate(s) of Installation information to the HERS provider data registry website on behalf of the builder or the builder's subcontractor when such facilitation has been authorized by the builder or subcontractor. However, the builder or subcontractor responsible for the installation is still required to sign/certify the completed Certificate of Installation (CF2R) to confirm the accuracy of the information, and confirm that the installation complies with the requirements shown on the Certificate of Compliance (CF1R) for the building.

After submittal the Certificate of Installation information to the HERS provider data registry, the builder or subcontractor must access the registered Certificate of Installation from the provider data registry, submit an electronic certification/signature to the registry, and provide a copy to the HERS rater. The registered copy submitted to the HERS rater may be in paper or electronic format, or the HERS rater may access the completed, signed and registered copy of the Certificate of Installation directly from the registry.

After providing the HERS rater a copy (or access to in the registry) of the Certificate of Installation, the builder or subcontractor shall provide a copy of the completed, signed, and registered Certificate of Installation at the building site for review by the enforcement agency in conjunction with requests for final inspection for each dwelling unit. The builder or subcontractor shall also leave a copy of the completed and registered CF2R, along with the homeowners' manual (see section 2.3.5 for details), in the building for the building owner to receive at occupancy .

2.3.4 Field Verification and/or Diagnostic Testing Documentation (CF3R)

§10-103(a)5

For the 2013 Building Energy Efficiency Standards, some of the mandatory measures, some of the prescriptive requirements, and some of the measures that may be used for compliance in the performance approach may require field verification and/or diagnostic testing. This must be performed by a third-party inspector who is specially trained and independent from the builder or general contractor. The Energy Commission recognizes HERS raters for this purpose.

When field verification and/or diagnostic testing is required, the *Certificate of Verification* (CF3R) must be completed, registered, and signed/certified by the HERS rater. The CF3R documents include information about the measurements, tests, and field verification results that were required to be performed. The HERS rater must verify that the requirements for compliance have been met.

The HERS rater who has been chosen for the project must transmit the CF3R information to an approved HERS provider data registry. This must be the same HERS provider data registry through which the previous compliance documents (CF1R, CF2R) for the project were registered. The HERS rater used for the project must be certified by the HERS Provider whose registry the project has been entered into. A registered CF3R from the provider that has been signed/certified by the rater is made available to the enforcement agency and to the builder when HERS verification confirms compliance. The builder is ultimately responsible for ensuring that the enforcement agency has received the CF3R prior to the occupancy permit or final inspection.

Raters shall provide a separate registered CF3R form for each house that the rater determines has met the verification or diagnostic requirements for compliance. The HERS rater shall not sign a CF3R for a house that does not have a registered CF2R that has been signed/certified by the installer. If the building was approved as part of a sample group, the CF3R will include additional information that identifies whether the building was a tested or a "not tested" building from the sample group. The CF3R form for the tested home of a sample group will include the test/verification results, but the "not tested" homes will not. CF3R forms for "not tested" homes in a sample group will still have a registration number, date, time, etc. and a watermark of the

HERS Provider's seal. Refer to Reference Residential Appendix RA2 for more details on HERS verification and CF3R documentation procedures.

2.3.5 Compliance, Operating, and Maintenance, and Ventilation Information to be Provided by Builder

§10-103(b)

The final documentation in the compliance and enforcement process is the information that is provided to the homeowner. At the completion of construction and prior to occupancy, the enforcement agency shall require the builder to leave in the building the applicable completed, signed and dated compliance documentation including, at a minimum, the applicable CF1R forms, CF2R forms, and if compliance required HERS verification, the applicable CF3R forms. When registration is required, all of these compliance documents shall be registered copies. In addition to the compliance documentation, the builder must leave in the building all operating and maintenance information for all installed features, materials, components, and manufactured devices. The operating and maintenance information must contain the details needed to provide the building owner/occupant with instructions on how to operate the home in an energy-efficient manner and to maintain it so that it will continue to work efficiently into the future.

For individually-owned units in a multifamily building, the documentation must be provided to the owner of the dwelling unit or to the individual(s) responsible for operating the feature, equipment, or device. Information must be for the appropriate dwelling unit or building (paper or electronic copies of these documents are acceptable).

Example 2-1

Question

What are the plan checking/field inspection requirements related to the CF2R?

Answer The CF2R (Certificate of Installation) is not submitted with compliance documentation at the time of permit application, but rather is posted or made available for field inspection after installation. A field inspector should check the equipment that is actually installed against what is listed on the CF2R, and compare the CF2R and CF1R for consistent equipment characteristics. The field inspector should do this for all installed building components indicated on a CF2R form (HVAC, fenestration, insulation, water heating, etc.).

When HERS verification is required for compliance, the field inspector should check the HERS Required Verification listings on the CF1R to identify the required installer tests, and verify that these tests were performed and documented on the applicable Certificate(s) of Installation (CF2R).

The enforcement agency may request additional information to verify that the installed efficiency measures are consistent with the approved plans and specifications. When material properties or equipment efficiencies greater than the minimum requirements are shown on the CF1R, the enforcement agency may have procedures for verification of the actual material or equipment specifications. For example, the enforcement agency may require the installer to provide a copy of the applicable page(s) from a directory of certified equipment.

Example 2-2

Question

What happens to the CF2R after the final inspection?

Answer

§10-103(b) requires the builder to leave a copy of the CF2R in the building for the building owner at occupancy.

Example 2-3

Question

As a general contractor, when I have finished building a residence, is there a list of materials I am supposed to give to the building owner?

Answer

§10-103(b) requires that at final inspection the enforcement agency shall require the builder to leave compliance, operating, maintenance, and ventilation information in the building for the "building owner at occupancy," which includes the following:

1. Certificate of Compliance (CF1R);

2. Certificate(s) of Installation (CF2R);

3. Certificate(s) of Verification (CF3R) if applicable;

4. Operating information for all applicable features, materials, components, and mechanical devices installed in the building; and

5. Maintenance information for all applicable features, materials, components, and manufactured devices that require routine maintenance for efficient operation.

Example 2-4

Question

I built some multifamily buildings and have some questions about the information I must provide to the building owner at occupancy (as required by §10-103(b)). Specifically:

If the building is a condominium, can I photocopy the same CF1R information for all units?

When the building is an apartment complex (not individually-owned units), who gets the documentation?

If an apartment is converted to condominiums, does each owner/ occupant receive copies of the documentation?

Answer

Photocopied information is acceptable. It must be obvious that the CF1R documentation applies to that dwelling unit. That is, the features installed must match the features shown on the Certificate(s) of Installation (CF2R). If the CF1R compliance documentation is for a "whole building," a photocopy of the CF1R compliance form for that building must be provided. If individual compliance is shown for each unique dwelling unit, a photocopy of the documentation that applies to that dwelling unit must be provided. The copies may be in paper or electronic format.

The documentation and operating information is provided to whoever is responsible for operating the feature, equipment, or device (typically the occupant). Maintenance information is provided to whoever is responsible for maintaining the feature, equipment or device. This is either the owner or a building manager (§10-103(b)).

If, during construction, the building changes from an apartment to condominiums, each owner at occupancy would receive the documentation. If an existing apartment building changes to condominiums at a later date, the documentation requirements are triggered only by a building permit application requiring compliance with the Building Energy Efficiency Standards (changing occupancy does not trigger compliance with the Standards).

2.4 Roles and Responsibilities

2.4.1 Designer

5537 and 6737.1 of California Business and Professions Code

The designer is the person responsible for the overall building design. As such, the designer is responsible for specifying the building features that determine compliance with the Building Energy Efficiency Standards and other applicable building codes. The designer is required to provide a signature on the Certificate of Compliance (CF1R) to certify that the building has been designed to comply with the Building Energy Efficiency Standards.

The designer may personally prepare the Certificate of Compliance documents, or may delegate preparation of the energy analysis and Certificate of Compliance documents to an energy documentation author or energy consultant. If preparation of the building energy Certificate of Compliance documentation is delegated, the designer must remain in responsible charge of the building design specifications, energy calculations, and all building feature information represented on the Certificate of Compliance. The designer's signature on the Certificate of Compliance affirms his or her responsibility for the information submitted on the Certificate of Compliance.

The designer may be an architect, engineer or other California-licensed professional; however, a licensed design professional may not always be required for low-rise residential buildings. The California Business and Professions Code allows unlicensed designers to prepare design documentation for wood-framed single family dwellings as long as the dwellings are no more than two stories in height (not

counting a possible basement). Two-story wood-framed multifamily buildings may also be designed by unlicensed designers as long as the building has four or fewer dwelling units. When the designer is a licensed professional, the signature block on the Certificate of Compliance must include the designer's license number.

When Certificate of Compliance document registration is required, the Certificate of Compliance must be submitted to an approved HERS provider data registry. All submittals to the HERS provider data registry must be made electronically.

2.4.2 Documentation Author

§10-103(a)1

The person responsible for the design of the building may delegate the energy analysis and preparation of the Certificate of Compliance documentation to a building energy consultant or documentation author. A completed Certificate of Compliance must be submitted to the enforcement agency during the building permit phase. The Certificate of Compliance demonstrates to the enforcement agency plan checker that the building design complies with the requirements of the Building Energy Efficiency Standards, thus the building energy features information submitted on the Certificate of Compliance must be consistent with the building design features defined in the plans and specifications for the building submitted to the enforcement agency.

The documentation author is not subject to the same limitations and restrictions of the *Business and Professions Code* as is the building designer because the documentation author is not responsible for specification of the building design features. The documentation author may provide the building designer with recommendations for building energy features and if those recommendations are approved by the building designer, the features must be incorporated into the building design plans and specification documents submitted to the enforcement agency at plan check. The documentation author's signature on the Certificate of Compliance certifies that the documentation he or she has prepared is accurate and complete, but does not indicate documentation author responsibility for the specification of the features that define the building design. The documentation author provides completed Certificate of Compliance documents to the building designer who must sign the Certificate of Compliance prior to submittal of the Certificate of Compliance to the enforcement agency at plan check.

If registration of the Certificate of Compliance is required, the Certificate of Compliance must be submitted to the HERS provider data registry and signed electronically by both the designer and documentation author prior to submittal to the enforcement agency. When document registration is required, only registered Certificates of Compliance that display the registration number assigned to the certificate by an approved HERS provider data registry are acceptable for submittal to the enforcement agency at plan check.

For a list of qualified documentation authors, visit the *California Association of Building Energy Consultants' (CABEC)* website at: http://www.cabec.org/ceperosterall.php

2.4.3 Builder or General Contractor

The term builder refers to the general contractor responsible for construction. For production homes, the builder may also be the developer with responsibility for arranging financing, acquiring the land, subdividing the property, securing the necessary land planning approvals and attending to the other necessary tasks that are required prior to actual construction. Many production builders are also involved in the marketing and sales of homes after they are constructed.

During the construction process, the builder or general contractor usually hires specialty subcontractors to provide specific services, such as installing insulation, designing and installing HVAC systems, installing windows and skylights, installing water heating systems, etc. For homes that do not require a licensed design professional, the builder may sign the Certificate of Compliance (CF1R) in the "Responsible Building Designer's" signature block.

The builder or general contractor must ensure that Certificate(s) of Installation (CF2R) are submitted to the enforcement agency by the person(s) responsible for construction/installation of regulated features, materials, components, or manufactured devices. The builder or general contractor may sign the Certificate of Installation on behalf of the specialty subcontractors they hire, but generally, Certificate of Installation preparation and signature responsibility resides with the specialty subcontractor who provided the installation services. The Certificate of Installation document identifies the installed features, materials, components, or manufactured devices detailed in the plans and specifications, and the Certificate(s) of Compliance approved by the local enforcement agency. If the installation requires field verification and diagnostic testing by a HERS rater, the Certificate of Installation must report the results of any of the installer's required testing of the regulated installations to measure their performance, and the CF2R shall be submitted to an approved HERS provider data registry. A copy of the registered Certificate of Installation is required to be posted at the building site for review by the enforcement agency in conjunction with requests for final inspection.

When the Building Energy Efficiency Standards require registration of the compliance documents, the builder or general contractor must ensure the transmittal/submittal of the required CF1R information to an approved HERS provider data registry. The builder or general contractor must make arrangements for the services of a certified HERS rater if the Certificate of Compliance indicates that third-party field verification and diagnostic testing by a HERS rater is required. The builder or general contractor must ensure that a copy of the Certificate of Compliance that was approved by the designer/owner and submitted to the enforcement agency during the permitting phase is transmitted to the HERS provider data registry and made available to the HERS rater who will perform any required field verification and diagnostic testing.

When installation work is complete, the builder or general contractor must ensure that the persons responsible for the installation work have transmitted/submitted the required Certificate of Installation information to the HERS provider data registry. Additionally, the builder must ensure that the HERS rater receives a copy of the completed Certificate of Installation (CF2R), or provide access to in the data registry, that has been registered and signed by the builder or subcontractors responsible for the installation that is to be verified by the HERS rater. When registration of the Certificate of Installation is required, the completed and signed copies that are posted at the building site for review by the enforcement agency, in conjunction with requests for final inspection, are required to be registered copies.

At final inspection, the builder or general contractor is required to leave in the building all applicable completed, signed, dated, and registered (when applicable) compliance documents for the building owner at occupancy. Such information must, at a minimum, include information indicated on the following forms: Certificate of Compliance (CF1R); Certificate(s) of Installation (CF2R); and for buildings for which compliance requires HERS field verification, Certificate(s) of Verification (CF3R). These forms must be in paper or electronic format and must conform to the applicable requirements of §10-103(a).

2.4.4 Specialty Subcontractors

Specialty subcontractors provide the builder with services from specific building construction trades for installation of features such as wall and ceiling insulation, windows, HVAC systems and/or duct systems, water heating and plumbing systems, and these subcontractors may perform other trade-specific specialty services during the building construction process. The builder has ultimate responsibility for all aspects of the building's construction and has the authority to complete and sign/certify all sections of the required Certificate(s) of Installation (CF2R) forms. However, the licensed specialty subcontractor should be expected to complete and sign/certify all applicable Certificate(s) of Installation that document the completion of the installation work they have performed for the builder. The subcontractor's responsibility for Certificate of Installation documentation should include providing a registered (when applicable) and signed copy of all applicable CF2R's to the builder, posting a registered and signed copy of all applicable CF2R's at the building site for review by the enforcement agency, and making available to the HERS rater the registered and signed copies of the applicable CF2R's if HERS third-party field verification is required for compliance, as specified on the Certificate of Compliance (CF1R).

When the Standards require document registration, all copies of the Certificate(s) of Installation documentation submitted to the builder, the enforcement agency, and the HERS rater are required to be registered copies prepared in accordance with the procedures described in Reference Residential Appendix RA2, Reference Joint Appendix JA7, and Section 2.3 of this manual.

2.4.5 Enforcement Agency

§10-103

The enforcement agency is the local agency with responsibility and authority to issue building permits and verify compliance with applicable codes and standards. The enforcement agency performs several key roles in the compliance and enforcement process.

Plan check: The enforcement agency performs plan check review of the Certificate(s) of Compliance documentation and of the plans and specifications that define the building design submitted to the enforcement agency at the building permit phase. During plan check, the Certificate of Compliance documentation is compared to the plans and specifications for the building design in order to confirm that the building features that describe the building are specified consistently in all of the documents submitted. If the specification for building design features shown on the Certificate of Compliance does not conform to the specifications shown on the designer's submitted plans and specifications for the building, revision of the submitted documents must be performed to make the design specification consistent in all documents. Thus, if the Certificate of Compliance indicates the building complies, and the features on the Certificate of Compliance are consistent with the features given in the plans and specifications for the building design, then the plan check process can confirm that the building design complies with the building energy code. If it is determined that the building design is in compliance with the building energy code, in addition to all of the other building codes, the enforcement agency may issue a building permit. When the Standards require document registration, the Certificate of Compliance documentation that is submitted to plan check must be a registered document from an approved HERS provider data registry.

Construction inspection: During the construction of the building, the enforcement agency should make several visits to the construction site to verify that the building is being constructed in accordance with the approved plans and specifications, and energy compliance documentation. As part of this process, at each site visit, the enforcement agency should review any applicable Certificate(s) of Installation that have been posted or made available with the building permit(s). The enforcement agency should confirm that the energy efficiency features installed in the house are consistent with the requirements given in the plans and specifications for the building approved during plan check; that the installed features are described accurately on the Certificate(s) of Installation; and that all applicable sections of the Certificate(s) of Installation have been signed by the responsible licensed person(s). The enforcement agency shall not approve a dwelling unit until the enforcement agency has received all applicable Certificate(s) of Installation. When the Standards require registration of the energy compliance documents, the Certificate(s) of Installation documentation must be registered with an approved HERS provider data registry.

Corroboration of field verification and diagnostic testing procedures: As described in Reference Residential Appendix Section RA2.4.4, at its discretion, the enforcement agency may require that field verification and diagnostic testing

performed by the builder or subcontractors or the certified HERS rater must be scheduled to be performed at a time when the enforcement agency's field inspector can observe the verification or test procedures to corroborate the results reported/documented on the Certificate(s) of Installation (CF2R) and/or the Certificate(s) of Verification (CF3R).

Sampling within enforcement agency jurisdictions: When sampling is utilized for HERS verification compliance for *newly constructed buildings*, all dwellings in a designated sample group must be located within the same enforcement agency jurisdiction and subdivision or multifamily housing development, as specified in Reference Residential Appendix Section RA2.6.3.1

When sampling is utilized for HERS verification compliance for *alterations*, the dwellings in a designated sample group are not required to be located within the same enforcement agency jurisdiction, and the building owner may choose for the field verification and diagnostic testing to be completed as part of a designated sample group composed of dwelling units for which the same installing company has completed the work that requires field verification and diagnostic testing for compliance, as specified in Reference Residential Appendix Section RA2.8. However, to enable the enforcement agency to schedule testing to accomplish the corroboration described in the previous section, the enforcement agency may choose to require that a separate dwelling unit from the sample group that is located within its jurisdiction be tested.

Final approval: The enforcement agency may approve the dwelling at the final inspection phase of the process if the enforcement agency field inspector determines that the dwelling conforms to the requirements of the building's plans and specifications and Certificate of Compliance documents approved by the enforcement agency at plan check, and meets the requirements of all other applicable codes and standards. For dwelling units that have used an energy efficiency compliance feature that requires Certificate of Installation documentation, the enforcement agency shall not approve the dwelling unit until the enforcement agency has received a Certificate of Installation that meets the requirements of §10-103(a) that has been completed, signed, and registered (when applicable) by the builder or subcontractor.

For dwelling units that require third party HERS field verification and diagnostic testing for compliance, the enforcement agency shall not approve the dwelling unit until the enforcement agency has received a registered copy of the Certificate of Verification that meets the requirements of §10-103(a) that has been signed and dated by the HERS rater. The builder must ultimately take responsibility to ensure that all such required energy compliance documentation has been completed properly and posted at the job site or submitted to the enforcement agency in conjunction with any of the enforcement agency's required inspections. However, the enforcement agency, in accordance with §10-103(d), as prerequisite to approval of the building, must examine all required copies of Certificate(s) of Installation (CF2R) documentation and Certificate(s) of Verification (CF3R) documentation posted at the site or made available with the building permits for the required inspections, to

confirm that they have been properly prepared and are consistent with the plans and specifications and the Certificate of Compliance documentation approved by the enforcement agency for the building at plan check.

When an alteration has been performed by a participating Third Party Quality Control Program (TPQCP) contractor (see section 2.4.8 of this manual), the enforcement agency may conditionally approve the building based on the Certificate of Installation (CF2R) if the TPQCP data checking has indicated that the installation complies. However, if subsequent HERS compliance verification procedures determine that re-sampling, full testing or corrective action is necessary for such conditionally approved dwellings in the group, the corrective work must be completed. Refer to Reference Residential Appendix RA2.4.3, RA2.7, and RA2.8 for additional information on TPQCP requirements.

Corroboration of information provided for the owner/occupant: At final inspection, the enforcement agency shall require the builder to leave in the building (for the building owner at occupancy) energy compliance, operating, maintenance, and ventilation information documentation as specified by §10-103(b).

Compliance documents for the building shall, at a minimum, include information indicated on forms: Certificate of Compliance (CF1R); Certificate(s) of Installation (CF2R); and, for buildings for which compliance requires HERS field verification, Certificate(s) of Verification (CF3R). These forms shall be copies of the documentation submitted to or approved by the enforcement agency, and the copies must conform to the applicable requirements of §10-103(a).

Operating information shall include instructions on how to operate or maintain the buildings energy features, materials, components, and mechanical devices correctly and efficiently. Such information shall be contained in a folder or manual which provides all information specified in §10-103(b). This operating information shall be in paper or electronic format. For dwelling units, buildings or tenant spaces that are not individually owned and operated, or are centrally operated, such information shall be provided to the person(s) responsible for operating the feature, material, component, or mechanical device installed in the building. This operating information shall be in paper or electronic format.

Maintenance information shall be provided for all features, materials, components, and manufactured devices that require routine maintenance for efficient operation. Required routine maintenance actions shall be clearly stated and incorporated on a readily accessible label. The label may be limited to identifying, by title and/or publication number, the operation and maintenance manual for that particular model and type of feature, material, component, or manufactured device. For dwelling units, buildings or tenant spaces that are not individually owned and operated, or are centrally operated, such information shall be provided to the person(s) responsible for maintaining the feature, material, component, or mechanical device installed in the building. This maintenance information shall be in paper or electronic format.

Ventilation information shall include a description of the quantities of outdoor air that the ventilation system(s) are designed to provide to the building's conditioned space, and instructions for proper operation and maintenance of the ventilation system. For buildings or tenant spaces that are not individually owned and operated, or are centrally operated, such information shall be provided to the person(s) responsible for operating and maintaining the feature, material, component, or mechanical ventilation device installed in the building. This information shall be in paper or electronic format.

Example 2-5

Question:

We are an enforcement agency with jurisdiction over the replacement of an HVAC unit's outdoor compressor/condenser unit (an alteration), and the HVAC contractor who pulled the permit for replacing the unit has requested that we approve the final inspection and close out the permit based only on the Certificate of Installation (CF2R) for this job. This job requires HERS verification, and I thought it was necessary to receive the HERS rater's completed and signed Certificate of Verification (CF3R) before the job could be considered to be in compliance as a condition to final approval of the installation. Is there an allowance for compliance based only on the CF2R?

Answer:

Yes. The enforcement agency may provide a "conditional" final approval of the installation based upon the CF2R for alterations jobs only, and only if the installing contractor is an approved Third Party Quality Control Program (TPQCP) installing contractor. The conditional final approval is allowed if TPQCP data checking has scrutinized the diagnostic test data submitted by the approved contractor's diagnostic test for the installation, and such data checking indicates the installation complies as shown on the CF2R. The permitee is still required to complete all HERS verification procedures and comply with all HERS verification criteria, and a CF3R is still required to be submitted to the enforcement agency, builder, and home owner in order for the documentation procedure to be complete. If HERS verification of the approved TPQCP contractor's installation work determines that re-sampling, full testing, or corrective action is necessary to bring the installation into compliance, such work must be completed prior to issuance of the CF3R. Sampling procedures for HERS verification for installation work performed by an approved TPQCP contractor allows for testing of one sample from a designated group of up to 30 dwellings/installations for which the work was performed by the same approved TPQCP installing contactor. Refer to Reference Residential Appendix Sections RA2.4.3, RA2.7 and RA2.8 (and Chapter 9 of this manual) for additional information on Third Party Quality Control Programs and conditional approvals for alterations that use approved TPQCP contractors.

2.4.6 HERS Provider

http://www.cheers.org

http://www.calcerts.com

http://www.cbpca-hers.org

A HERS provider is an organization that the Energy Commission has approved to administer a HERS program. A HERS provider has responsibility to certify and train raters and maintain quality control over the activities performed by the HERS raters who provide third-party field verification and diagnostic testing on installed energy efficiency features in dwellings when required for compliance with the Building Energy Efficiency Standards. In California, the certified HERS providers currently are: ConSol Home Energy Efficiency Rating System (CHEERS); California Certified Energy Rating & Testing Services (CalCERTS); and U.S. Energy Raters Association (USERA) who was formerly CBPCA.

The HERS provider must maintain a database (data registry) that incorporates an internet website-based user interface that has sufficient functionality to accommodate the needs of the authorized users of the data registry who must participate in the administration of HERS compliance, document registration, and Building Energy Efficiency Standards enforcement activities. The data registry must receive and record information that can adequately identify and track measures that require HERS verification in a specific dwelling, and must have the capability to determine compliance based on the information input from the results of applicable testing or verification procedures reported as input to the data registry for the dwelling. When the requirements for compliance are met, the data registry must make available a unique "registered" certificate for use in complying with document submittal requirements to enforcement agencies, builders, building owners, HERS raters, and other interested parties. Under the 2013 Building Energy Efficiency Standards, the data registry must have the capability to facilitate electronic submittal of the registered certificates to an Energy Commission document repository for retention of the certificates for use in enforcement of the regulations.

The HERS provider must make available via phone or internet communications interface a way for building officials, builders, HERS raters, and other authorized users of the provider's data registry to verify the information displayed on copies of the submitted compliance documentation. Refer to Reference Residential Appendices Section RA2.4.2 and Reference Joint Appendix JA7 for additional information describing the HERS provider's role and responsibilities.

2.4.7 HERS Rater

The HERS rater is trained and certified by an Energy Commission-approved HERS provider to perform the field verification and diagnostic testing that may be required to demonstrate and document compliance with the Building Energy Efficiency Standards. HERS raters receive special training in diagnostic techniques and building science as part of the HERS rater certification process administered by the HERS provider; thus HERS raters are to be considered special inspectors by enforcement

agencies and shall demonstrate competence, to the satisfaction of the enforcement agency, to conduct the required visual inspections and diagnostic testing of the regulated energy efficiency features installed in the dwelling.

HERS raters should be cognizant that some enforcement agencies charge a fee for special inspectors in their jurisdictions, and because HERS raters are deemed to be special inspectors for the enforcement agency, a HERS rater may be disciplined (e.g., prohibit a HERS rater from conducting field verifications/testing in a local jurisdiction) if the enforcement agency determines that a HERS rater willingly or negligently does not comply with the Building Energy Efficiency Standards. HERS raters may also be required to attain business licenses in some jurisdictions.

If the documentation author who produced the Certificate of Compliance documentation for the dwelling is not an employee of the builder or subcontractor, the documentation author for the dwelling may also act to perform the responsibilities of a HERS rater, provided the documentation author has met the requirements and has been certified as a HERS rater, and is associated with one of the Energy Commission-approved HERS providers.

If requested to do so by the builder or subcontractor, the HERS rater may assist the builder or subcontractor in transmitting/submitting the Certificate(s) of Installation (CF2R) information to the HERS provider for registration. However, the HERS rater may not certify the information on a Certificate of Installation. The builder or subcontractor responsible for the installation must provide the Certificate of Installation certification/signature to confirm the information submitted to the HERS provider data registry, even if the HERS rater has assisted with transmittal of the data. Refer to Reference Residential Appendix Section RA2.5 and Reference Joint Appendix JA7 for more information that describes these procedures for document registration for which the HERS rater may assist the builder or subcontractor.

The HERS rater is responsible for conducting the field verification and diagnostic testing of the installed special features when required by the Certificate of Compliance (CF1R). The HERS rater must transmit the results of the field verification and diagnostic testing to the HERS provider data registry. The HERS rater must provide to the data registry all information required to complete the Certificate(s) of Verification (CF3R) form, and must also submit a certification/signature to the data registry. Whereupon, the data registry will make available registered copies of the Certificate(s) of Verification (CF3R) to the HERS rater, the builder, the enforcement agency, and other authorized users of the HERS provider's data registry. Printed copies, electronic or scanned copies, and photocopies of the completed, signed, and registered Certificate(s) of Verification (CF3R) are allowed for document submittals, subject to verification that the information contained on the copy conforms to the registered document information currently on file in the HERS provider data registry for the dwelling. A completed, signed, and registered copy of the Certificate(s) of Verification (CF3R) must be posted at the building site or made available to the inspector for review by the enforcement agency in conjunction with requests for final inspection for each dwelling unit.

For more information on the roles and responsibilities for HERS raters, refer to Reference Residential Appendix Section RA2.4.2.

Example 2-6

Question:

May a certified HERS rater who does the field verification and completes and signs the CF3R for a dwelling also perform the testing required of the builder or installer to certify compliance with the Title 24, Part 6 installation requirements on the CF2R?

Answer:

Yes. This approach is allowed when the HERS rater is doing field verification for every dwelling (100% testing), but it is not allowed when the HERS rater performs verification utilizing a designated sample group of dwellings. When 100% testing is utilized for HERS verification, the builder or the installer may utilize the information from the HERS rater's verification or diagnostic test results when completing the CF2R; but when doing so, the builder or installer must be aware that when they sign the certification statement on the CF2R they are assuming responsibility for the information content on the CF2R and are certifying that the installation conforms to all applicable codes and regulations. The HERS rater may not sign the CF2R form and cannot be assigned the responsibilities of the builder or installer as stated on the CF6R2R form and in regulations. If the HERS rater determines that the compliance requirements are not met, the HERS rater will submit the data of the failed verification/testing into a HERS Provider data registry for retention, and the builder or installer must take corrective action to make whatever corrections are necessary. Once corrections have been made and the HERS rater determines that all compliance requirements are met, the builder or installer may certify the work by completing and signing the applicable section of the CF2R, and the HERS rater can complete the CF3R documentation for the dwelling.

Example 2-7

Question

I heard that there are conflict-of-interest requirements that HERS raters must abide by when doing field verification and diagnostic testing. What are these requirements?

Answer

HERS raters are expected to be objective, independent, third parties when they are fulfilling their duties as field verifiers and diagnostic testers. In this role, they are serving as special inspectors for local enforcement agencies. By law, HERS raters must be independent entities from the builder or subcontractor installer of the energy efficiency features being tested and verified. They can have no financial interest in the installation of the improvements. HERS raters cannot be employees of the builder or subcontractor whose work they are verifying. Also, HERS raters cannot have a financial interest in the builder’s or contractor’s business, or advocate or recommend the use of any product or service that they are verifying.

The Energy Commission expects HERS raters to enter into a contract with the builder (not with sub-contractors) to provide independent, third-party diagnostic testing and field verification. The procedures adopted by the Energy Commission call for direct reporting of results to the builder, the HERS provider, and the building official. Although not recommended by the Energy Commission, a “three-party contract” between builder, HERS rater and sub-contractor is possible, provided that the contract delineates both the independent responsibilities of the HERS rater and the responsibilities of a sub-contractor to take corrective action in response to deficiencies that are found by the HERS rater. Such “three-party contracts” may also establish the role for a sub-contractor to serve as contract administrator for the contract, including scheduling the HERS rater, invoicing, and payment, provided the contract ensures that monies paid by the builder to the HERS rater can be traced through audit. It is critical that such “three-party contracts” preserve the rater's independence in carrying out the responsibilities specified in Energy Commission-adopted HERS field verification and diagnostic testing procedures. Even though such “three-party contracts” are not on their face in violation of the requirements of the Energy Commission, the closer the working relationship between the HERS rater and the sub-contractor whose work is being inspected, the greater the potential for compromising the independence of the HERS rater.

Compliance cannot be shown using sampling if a "three-party contract" is used. 100% of homes must be tested by a HERS rater when a three-party contract is used. HERS raters must use their own diagnostic equipment (cannot use the installing contractor's diagnostic equipment) when verifying work performed when a three-party contract is used.

(See Blueprint #66, pp. 1-2, and Blueprint #67, p. 7)

CHEERS, CalCERTS and USERA have been approved by the Energy Commission to serve as HERS providers to certify and oversee HERS raters throughout the state. These HERS providers are required to provide ongoing monitoring of the propriety and accuracy of HERS raters in the performance of their duties and to respond to complaints about HERS rater performance. In cases where there may be real or perceived compromising of HERS rater independence, they are responsible for providing increased scrutiny of the HERS rater, and taking action to ensure objective, accurate reporting of diagnostic testing and field verification results, in compliance with Energy Commission adopted procedures.

Enforcement agencies have authority to require HERS raters to demonstrate their competence to the satisfaction of the building official. Therefore, in situations where the independence of the HERS rater is in question, building officials can prohibit a particular HERS rater from being used in their jurisdiction, or disallow HERS rater practices that the building official believes will compromise the HERS rater's independence. Building officials may require the use of a three-party contract. For additional information about three-party contracts, please contact the Energy Commission Hotline.

2.4.8 Third Party Quality Control Program

The Energy Commission may approve Third Party Quality Control Programs (TPQCP) that serve some of the functions of HERS raters for field verification purposes but do not have the authority to sign compliance documentation as a HERS rater. Third Party Quality Control Programs:

1. Provide training to installers, participating program installing contractors, installing technicians and specialty Third Party Quality Control Program subcontractors regarding compliance requirements for measures for which diagnostic testing and field verification is required.
2. Collect data from participating installers for each installation completed for compliance credit.
3. Perform data checking analysis of information from diagnostic testing performed on participating TPQCP contractor installation work to evaluate the validity and accuracy of the data and to independently determine whether compliance has been achieved.
4. Provide direction to the installer to retest and correct problems when data checking determines that compliance has not been achieved.
5. Require resubmission of data when retesting and correction is directed.
6. Maintain a database of all data submitted by the participating TPQCP contractor in a format that is acceptable and made available to the Energy Commission upon request.

The HERS provider must arrange for the services of an independent HERS rater to conduct independent field verifications of the installation work performed by the participating TPQCP contractor and Third Party Quality Control Program. If group sampling is utilized for HERS verification compliance for jobs completed by a participating TPQCP contractor, the sample from the group that is tested for compliance by the HERS rater may be selected from a group composed of up to 30 dwellings for which the same participating TPQCP contractor has performed the installation work. For alterations, the installation work performed by TPQCP contractors may be approved at the enforcement agency's discretion, based upon a properly completed Certificate of Installation (CF2R) as described in Section 2.4.5, on the condition that if subsequent HERS compliance verification procedures determine that re-sampling, full testing or corrective action is necessary for such conditionally approved dwellings in the group, the corrective work must be completed. If the Standards require registration of the Certificate of Installation, the certificate must be a registered copy from a HERS provider data registry.

Refer to Reference Residential Appendix RA2.4.3, RA2.7, and RA2.8 for additional information about the Third Party Quality Control Program, and for additional information about document registration.

2.4.9 Owner

Building owner means the owner of the dwelling unit. In the context of production homes, the owner is the person or family that the builder sells the house to. In custom homes and remodels, the owner may be the “builder” or developer, and a general contractor, architect, or engineer, etc. may be in their employment.

As part of the compliance process, the owner must receive Compliance, Operating, Maintenance, and Ventilation information documents at the time of occupancy. The

enforcement agency must require the builder to leave this information in the building for the building owner at occupancy as specified in §10-103(b).

Example 2-8

Question

What is my responsibility with respect to the CF2R (Certificate of Installation) as: (a) an enforcement agency inspector; and (b) as a builder?

Answer

(a)The enforcement agency field inspector is responsible for verifying that the required CF2R form(s) are filled out completely and in conformance with the requirements of §10-103(d) during applicable site inspections, which includes verifying the CF2R is registered when required by the Standards, and confirming that the person responsible for the installation has signed the certificate. Inspectors must verify that the installed features conform to the plans and specifications and the Certificate of Compliance approved by the enforcement agency.

The CF2R is required to be posted at the job site or kept with the building permit, and must be made available for all applicable inspections. The enforcement agency field inspector should verify Certificate(s) of Installation during the applicable site inspections (e.g. verifying the Certificates of Installation for Quality Insulation Installation, QII, at the framing and insulation inspections). It is not advisable to wait until the final inspection to check all CF2R documentation.

(b)The general contractor or his/her agent (e.g. the installing contractor) must take responsibility for completing and signing the CF2R form for the work performed. A homeowner acting as the general contractor for a project is authorized to sign the CF2R; however, the installing contractor should provide the certification since the CF2R certification statement is an installer's assurance to the owner that the work has been completed properly and in compliance with applicable codes and regulations. The CF2R certification statement and signature indicates that the equipment or feature: 1) was installed properly and it confirms that the information provided on the form properly identifies the installed building component or equipment; 2) is equivalent or more efficient than required by the approved plans (as indicated on the CF1R); and 3) meets all relevant certification or performance requirements.

Refer to §10-103(a)3 for more information about Certificate of Installation requirements.

2.5 HERS Field Verification and Diagnostic Testing

This section describes some of the procedures and requirements for field verification and/or diagnostic testing of energy efficiency features.

Field verification and diagnostic testing is performed by special third-party inspectors called Home Energy Rating System (HERS) raters. The Energy Commission has given this responsibility to the HERS raters, who must be specially trained and certified to perform these services. HERS raters cannot be employees of the builder or contractor whose work they are verifying. Also HERS raters cannot have a financial

interest in the builder's or contractor's business, or advocate or recommend the use of any product or service that they are verifying. The training, quality assurance, and general oversight of HERS raters is conducted by Energy Commission-approved HERS providers.

2.5.1 Measures Requiring HERS Field Verification and Diagnostic Testing

The following features require field verification and/or diagnostic testing:

1. Duct Sealing
2. Supply Duct Location, Surface Area and R-Value
3. Low Leakage Ducts in Conditioned Space
4. Low Leakage Air Handlers
5. Verification of Return Duct Design
6. Verification of Air Filter Device Design
7. Verification of Bypass Duct Prohibition
8. Refrigerant Charge in ducted Split System and ducted Packaged Unit Air Conditioners and Heat Pumps, and mini-split systems
9. Refrigerant Charge Indicator Display (CID)
10. Verified System Airflow
11. Air Handler Fan Efficacy
12. Verified Energy Efficiency Ratio (EER)
13. Verified Seasonal Energy Efficiency Ratio (SEER)
14. Maximum Rated Total Cooling Capacity
15. Evaporatively Cooled Condensers
16. Ice Storage Air Conditioners
17. Continuous Whole-Building Mechanical Ventilation Airflow
18. Intermittent Whole-Building Mechanical Ventilation Airflow
19. Building Envelope Air Leakage
20. High Quality Insulation Installation (QII)
21. Quality Insulation Installation for Spray Polyurethane Foam

22. PV Field Verification Protocol
23. Verified Pipe Insulation Credit
24. Verified Parallel Piping
25. Verified Compact Hot Water Distribution System
26. Verified Point of Use
27. Demand Recirculation: Manual Control
28. Demand Recirculation: Sensor Control
29. Multiple Recirculation Loop Design for DHW Systems Serving Multiple Dwelling Units

Field verification and diagnostic testing is only required when certain regulated efficiency measures or equipment features are installed. If such efficiency measures or equipment features are not installed, then field verification and diagnostic testing is not required. For example, if a dwelling that must comply with the Standards does not have air distribution ducts, then HERS verification of duct leakage is not required for compliance.

2.5.2 Verification, Testing and Sampling

At the builder's option, HERS field verification and diagnostic testing may be completed either for each dwelling unit or for a sample of dwelling units. Sampling is permitted only when multiple dwelling units of the same type are constructed within the same subdivision by the same subcontractor. Sampling may also be utilized for alterations for groups composed of dwellings having the same measure installed that requires HERS verification, and where the same installing contractor has installed the measures. More detail on the sampling procedures is provided in Reference Residential Appendix Section RA2.6 and RA2.8.

The builder or subcontractor must provide to the HERS rater a copy of the Certificate of Compliance approved/signed by the principal designer/owner and a copy of the Certificate(s) of Installation (CF2R) signed/certified by the builder or subcontractors as specified in Reference Residential Appendix Section RA2.5.

When compliance requires document registration, prior to performing field verification and diagnostic testing, the HERS rater must verify that transmittal to the HERS provider data registry of the Certificate of Compliance information and the Certificate(s) of Installation (CF2R) information has been completed for each dwelling unit for which compliance requires HERS verification.

For all HERS verification procedures, the HERS rater must confirm that the Certificate(s) of Installation (CF2R) have been completed as required, and that the installer's diagnostic test results and all other Certificate(s) of Installation (CF2R) information shows compliance consistent with the requirements given in the plans and specifications and Certificate of Compliance approved by the local enforcement agency for the dwelling.

If field verification and diagnostic testing determines that the requirements for compliance are met, the HERS rater shall transmit the test results and rater certification/signature to the HERS provider data registry, whereupon the provider shall make available a registered copy of the completed and signed Certificate of Verification (CF3R) to the HERS rater, the builder, the enforcement agency, and other approved users of the HERS provider data registry. Printed copies, electronic or scanned copies, and photocopies of the completed, signed and registered Certificate of Verification (CF3R) shall be allowed for document submittals, subject to verification that the information contained on the copy conforms to the registered document information currently on file in the HERS provider data registry for the dwelling. A completed, signed and registered copy of the Certificate of Verification (CF3R) must be posted at the building site or made available for review by the enforcement agency in conjunction with requests for final inspection for each dwelling unit.

The HERS provider shall make available via phone or internet communications interface a way for building officials, builders, HERS raters, and other authorized users of the provider data registry to verify that the information displayed on copies of the submitted Certificate(s) conforms to the registered document information currently on file in the provider data registry for the dwelling unit.

NOTE: If the builder chooses the sampling option, the procedures described in Reference Residential Appendix Sections RA2.6and RA2.8 must be followed.

2.5.3 Initial Model Field Verification and Diagnostic Testing

The HERS rater must diagnostically test and field verify the first dwelling unit of each model within a subdivision or multifamily housing development. To be considered the same model, dwelling units must have the same basic floor plan layout, energy design, and compliance features as shown on the Certificate of Compliance for each dwelling unit. Variations in the basic floor plan layout, energy design, compliance features, zone floor area, or zone volume, that do not change the HERS features to be tested, the heating or cooling capacity of the HVAC unit(s), or the number of HVAC units specified for the dwelling units, shall not cause dwelling units to be considered a different model. For multi-family buildings, variations in exterior surface areas caused by location of dwelling units within the building shall not cause dwelling units to be considered a different model.

The initial model testing allows the builder to identify and correct any potential construction flaws or practices in the build out of each model. If field verification and

diagnostic testing determines that the requirements for compliance are met, the HERS rater will transmit the test results to the HERS provider data registry, whereupon the provider will make available a registered copy of the Certificate of Verification (CF3R) to the HERS rater, the builder, the enforcement agency, and other authorized users of the HERS provider data registry.

2.5.4 Group Sample Field Verification and Diagnostic Testing

After the initial model field verification and diagnostic testing is completed, the builder, or the builder's authorized representative determines which sampling procedure is to be used for the group of dwellings that require HERS field verification. There are two procedures for HERS verification compliance using group sampling: (1) sampling of a "closed" group of up to seven dwellings; and (2) sampling of an "open" group of up to five dwellings. The group sampling requirements for each procedure will be discussed in this section.

Transmittal/submittal of the Certificate(s) of Installation information, for at least one dwelling, to the HERS provider data registry, is required in order to "open" a new group. Additional dwellings may be entered into the registry, and included in an "open" group over a period of time, subject to transmittal/submittal of the Certificate(s) of Installation information to the registry for each additional dwelling. However the group shall not remain "open" to receive additional dwellings for a period longer than six months from the earliest date shown on any Certificate of Installation for a dwelling included in a group. A group may be "closed" at any time after the group has been "opened" at the option of the builder or builder's authorized representative, thus the size of a "closed" group may range from a minimum of one dwelling to a maximum of seven dwellings. When a group becomes classified as "closed", no additional dwellings shall be added to the group.

Sampling of a "closed" group of up to seven dwellings requires the following conditions to be met as prerequisite to receiving HERS compliance verification for the group:

1. All of the dwelling units contained in the sample group have been identified. Up to seven dwellings are allowed to be included in a "closed" sample group for the HERS compliance verification.
2. Installation of all the measures that require HERS verification has been completed in all the dwellings that are entered in the group, and registration of the Certificate(s) of Installation for all the dwellings entered in the group has been completed.
3. The group has been classified as a "closed" group in the HERS provider data registry.
4. At the request of the builder or the builder's authorized representative, a HERS rater will randomly select one dwelling unit from the "closed" sample group for field verification and diagnostic testing. If the dwelling unit meets the compliance requirements, this "tested" dwelling and also each of the other

"non-tested" dwellings in the group will receive a registered Certificate of Verification (CF3R).

Sampling of an "open" group of up to five dwellings requires the following conditions to be met as prerequisite to receiving HERS compliance verification for the group:

1. At least one dwelling unit from the sample group has been identified. Up to five dwellings are allowed to be included in an "open" sample group for the HERS compliance verification.
2. Installation of all the measures that require HERS verification shall be completed in all the dwellings that are entered in the group, and registration of the Certificate(s) of Installation for all the dwellings entered in the group has been completed.
3. At the request of the builder, or the builder's authorized representative, a HERS rater will randomly select one dwelling unit from those currently entered into the "open" sample group for field verification and diagnostic testing. If the dwelling unit meets the compliance requirements, the "tested" dwelling and also each of the other "non-tested" dwellings currently entered into the group shall receive a registered Certificate of Verification (CF3R). If less than five dwelling units have been entered into the group, the group shall be allowed to remain "open" and eligible to receive additional dwelling units. Dwelling units entered into the "open" group subsequent to the successful HERS compliance verification of the "tested" dwelling shall also receive a registered Certificate of Verification (CF3R) as a "non-tested" dwelling subject to receipt of the registered Certificate(s) of Installation by the HERS provider data registry for the dwelling. The group shall be "closed" when it reaches the limit of 5 dwellings, when the 6 month limit for "open" groups has been exceeded, or when the builder requests that the group be closed.

The HERS rater must confirm that the Certificate(s) of Installation have been completed as required, and that the installer's diagnostic test results and the Certificate(s) of Installation shows compliance consistent with the Certificate of Compliance for the dwelling unit.

The HERS rater must diagnostically test and field verify the selected dwelling unit, and enter the test and/or field verification results into the HERS provider data registry regardless of whether the results indicate a pass or fail. If the test fails, then the failure must be entered into the provider's data registry even if the installer immediately corrects the problem. In addition, any applicable procedures for re-sampling, full testing, and corrective action must be followed as described in section 2.5.5 of this Chapter below.

If field verification and diagnostic testing determines that the requirements for compliance are met, the HERS rater will enter the test results into the HERS provider data registry. Whereupon the provider will make available to the HERS rater, the builder, the enforcement agency, and to other approved users of the HERS provider

data registry, a registered copy of the Certificate of Verification (CF3R) for the "tested" dwelling, and for all other "non-tested" dwelling units entered in the group at the time of the sample test. So as to not create confusion by placing test results on non-tested dwelling units, the HERS provider data registry will not report the testing/verification results of the tested home on the certificate of field verification and diagnostic testing (CF3R) for non-tested dwelling units in a sample group. The testing/verification results will only be reported on the CF3R for the tested dwelling unit of the sample group. However, CF3R forms for non-tested dwelling units will still have a registration number and date, a watermark of the HERS provider's seal, etc. and will specify the dwelling unit was not tested and is part of a sample group.

The HERS provider is required to "close" any "open" group within 6 months after the earliest signature date shown on any Certificate of Installation for a dwelling entered in the group. When such group closure occurs, the HERS provider shall notify the builder that the group has been "closed," and require that a sample dwelling be selected for field verification and diagnostic testing by a HERS rater if field verification has not yet been conducted on a sample dwelling entered in the group.

2.5.5 Re-sampling, Full Testing and Corrective Action

When a failure is encountered during sample testing, the failure must be entered into the HERS provider data registry for retention by the HERS rater. Corrective action must then be taken on the failed dwelling unit, and the dwelling unit must subsequently be retested to verify that corrective action was successful and the dwelling complies. Corrective action and retesting on the dwelling unit must be repeated until the testing determines that the dwelling complies and the successful compliance results have been entered into the HERS provider data registry. Whereupon, a registered Certificate of Verification (CF3R) for the dwelling shall be made available to the HERS rater, the builder, the enforcement agency, and other authorized users of the HERS provider data registry.

In addition, the HERS rater must conduct re-sampling and test a second randomly selected dwelling within the sample group to assess whether the first failure in the group is unique, or if the rest of the dwelling units in the group are likely to have similar failings. "Re-sampling" refers to the procedure that requires testing of additional dwellings within a group when the initial selected sample dwelling from a group fails to comply with the HERS verification requirements.

When re-sampling in a "closed" group, if the testing of a second randomly selected dwelling in the group confirms that the requirements for compliance credit are met for that unit, then the dwelling unit with the initial failure is not considered to be an indication of failure in the remaining untested dwelling units in the group, and a copy of the Certificate of Verification (CF3R) will be made available for the remaining dwelling units in the group, including the dwelling unit in the re-sample. If the second sample results in a failure, the HERS rater must report the second failure to the HERS provider data registry, and all of the non-tested dwelling units in the group must thereafter be individually field verified and diagnostically tested.

Additional information describing the procedures for re-sampling of closed groups of up to 7 dwellings, and the procedures for re-sampling for open groups of up to 5 dwellings are described in Reference Residential Appendix RA2.6..

2.5.6 Installer Requirements and HERS Procedures for Alterations

When compliance for an alteration requires field verification and diagnostic testing by a certified HERS rater, the building owner may choose for the field verification and diagnostic testing to be completed for the dwelling unit individually; or alternatively, as part of a designated sample group of dwelling units for which the same installing company has completed work that requires testing and field verification for compliance. Generally speaking, the only alterations that will require HERS testing/verification are HVAC changeouts. The building owner or agent of the building owner must complete the applicable portions of a shorthand version of the Certificate of Compliance (the CF1R-ALT) form for their climate zone. When compliance requires HERS verification, the building owner or agent must make arrangements for transmittal/submittal of the Certificate of Compliance information to the HERS provider data registry, identifying the altered HVAC system and measures that require HERS verification. The building owner must also arrange to submit an approved/signed copy of the Certificate of Compliance to the HERS rater.

When the installation is complete, the person responsible for the performance of the installation must complete the Certificate(s) of Installation (CF2R). All required Certificate(s) of Installation must be registered with an approved HERS provider data registry when field verification and diagnostic testing is required.

After verifying that the Certificate of Compliance (CF1R-ALT) and all required Certificate(s) of Installation are completed, signed and registered, the HERS rater must perform HERS compliance verification, and if group sampling is utilized for compliance, the sampling procedures described in Reference Residential Appendix RA2.6.3.3 and RA2.8 for sampling of a ”closed” group of up to seven dwellings must be used, requiring that all dwelling units (HVAC systems) within the group have been serviced by the same installing company. The installing company may request a group for sampling that is smaller than seven dwelling units (HVAC systems). Re-sampling, full testing, and corrective action must be completed, if necessary, as specified by Reference Residential Appendix RA2.6.4. NOTE: Whenever the HERS rater for the group is changed, a new group must be established.

The enforcement agency cannot approve the alteration until the enforcement agency has verified completed, signed and registered Certificate of Compliance (CF1R-ALT), Certificate(s) of Installation (CF2R), and Certificate(s) of Verification (CF3R) documentation for the altered HVAC system. The enforcement agency shall also verify that the installing contractor provides copies of all of these forms to the home owner.

Third Party Quality Control Programs, as specified in Reference Residential Appendix RA2.7, may also be used with alterations, and must be limited to “closed” sample

group sizes of thirty dwelling units (HVAC systems) or less. When a Third Party Quality Control Program is used, the enforcement agency may approve compliance based on the Certificate(s) of Installation (CF2R), where data checking has indicated that the unit complies, on the condition that if the required HERS verification procedures determine that re-sampling, full testing, or corrective action is necessary, such work shall be completed.

2.5.7 For More Information

More details on field verification and/or diagnostic testing and the HERS provider data registry are provided in the *2013 Reference Residential Appendices and 2013 Reference Joint Appendices*, as described below:

Reference Residential Appendix RA2 – Residential HERS Verification, Testing, and Documentation Procedures

Reference Residential Appendix RA3 – Residential Field Verification and Diagnostic Test Protocols

Reference Joint Appendix JA7 – Data Registry Requirements

Example 2-9

Question

Given a multifamily building that has used the Duct Sealing HERS credit for compliance for all the dwelling units in the building, what is the correct sampling procedure for HERS field verification and diagnostic testing for the air distribution ducts?

Answer

If the builder of a multifamily building chooses to comply using sampling, then the sampling is done using groups composed of dwelling units that have utilized the same HERS measures for compliance. Dwellings that do not have the same HERS measures specified for compliance are not allowed to be placed in the same HERS sample group. If the whole-building compliance approach has been used, all dwellings in the building, by default, have the same HERS features specified. However, if unit-by-unit compliance approach has been used, and all dwellings do not utilize the same HERS features for compliance, then only the dwellings that have utilized the same HERS features may be grouped together.

For this example, since duct testing is the only HERS measure specified for all of the dwelling units, all of the dwelling units in the building can be grouped together for purposes of HERS verification requirements. The procedures for assigning dwellings to groups and the HERS verification of a sample from each group must follow the same procedure as for single family dwellings described in Section 2.5.2 earlier in this chapter, and in Reference Residential Appendix RA2. The first dwelling unit for each model floor plan in the building must be verified by the HERS rater prior to start of formation of sample groups. For multi-family buildings, variations in exterior surface areas caused by location of dwelling units within the building do not cause dwelling units to be considered a different model floor plan. When verifying a dwelling unit, all the duct systems associated with every HVAC unit in the dwelling must be tested in order to determine compliance for that dwelling. After the HERS verification of the first dwelling of each model floor plan is complete, the HERS rater must randomly select a sample dwelling unit from each group of dwellings that have been formed, and these samples must be tested according to applicable procedures in Reference Residential Appendix RA3, and documented according to procedures in Reference Residential Appendix RA2. In a sampled dwelling unit that is to be tested to confirm compliance, the duct system associated with every HVAC unit in that dwelling unit must be tested. However duct systems do not have to be tested in dwelling units that are not selected for sampling (non-tested dwelling), provided the dwelling that was tested complies. If the tested dwelling in the group complies with the HERS verification, the remaining dwellings in the sample group are certified for compliance based on the results of the sample dwelling test result. Testing must be done on every duct system in a dwelling unit, regardless of whether it appears that the HVAC and duct system are in conditioned space or not. This is akin to a single family residence with one HVAC unit serving upstairs with ducts in the attic and another serving downstairs with ducts between floors.

Defining duct location as "inside" or "outside" for leakage purposes is not described by the locations of walls or the number of stories. The boundary between inside and outside for leakage purposes is defined by the air boundary, typically drywall, between inside and outside. Spaces between floors and spaces in walls (including interior walls) are often "outside" from an air leakage perspective because they are not sealed effectively to form an air barrier and communicate to the outside.

Duct insulation is not required for ducts in directly conditioned space because there is an expectation that there will be reduced conduction losses for these ducts. But to get full credit for ducts in conditioned space, duct leakage must be tested and meet the requirements for duct sealing. In a multifamily building in order for compliance credit to be taken for ducts in conditioned space, all of the duct systems in the building must be in conditioned space unless compliance is documented for each dwelling unit separately. To meet the mandatory requirements, all HVAC units must have ducts made of UL 181 approved materials (i.e., cased coils). Coils enclosed by sheetrock do not meet the mandatory requirements.

3. Building Envelope Requirements

This chapter describes the requirements that affect the design of the building envelope for residential buildings. The building's design and choices made for individual components can significantly impact the energy demand needed to meet heating and cooling loads to maintain the building's desired inside comfort temperature. Heating and Cooling load calculations are used to determine the mechanical system design needed for space heating and cooling. The principal components of heating loads are infiltration and conduction losses through building envelope components, including walls, roofs, floors, slabs, windows and doors. Cooling loads, on the other hand, are dominated by solar gains through windows and skylights.

3.1 Organization

This chapter is organized by building system or building envelope component, and includes the following subject areas:

3.2 What's New for 2013

- Highlights of significant changes for 2013 affecting the building envelope Compliance Options
- Provisions allowing the Energy Commission to approve new products, methods, and procedures for compliance

3.3 Compliance Options

- A summary of the general requirements affecting compliance with the *2013 Building Energy Efficiency Standards*

3.4 Key Envelope Compliance Terms

- Terms used most often related to the building envelope for compliance purposes

3.5 Fenestration

- Detailed explanation of the mandatory requirements, and prescriptive and performance compliance approaches for fenestration

3.6 Envelope Features

- Detailed explanation of the mandatory requirements, and prescriptive and performance compliance approaches for the building envelope

3.7Advanced Assembly Systems

- Discussion of design techniques that when used in more innovative ways can improve building energy efficiency and receive compliance energy credit

3.8 Compliance and Enforcement

- Discussion of issues to aid compliance and enforcement for elements of the building envelope

3.9 Glossary/References

- Key terms and reference information most often used for the building envelope

3.2 What's New for 2013

The 2013 Building Energy Efficiency Standards for residential buildings include increased efficiencies for several envelope measures, and there are improvements that have been made to better aid the designer, builder, and building official.

- An updated equation to calculate the aged solar reflectance for cool roofing product, §110.8(i)2.
- Mandatory minimum insulation levels installed between 2x6 inch and greater wall framing, §150.0(c).
- Introduced assembly U-factor to meet the prescriptive insulation requirement, TABLE 150.1-A.
- Increased the prescriptive requirement for low- and steep-sloped roofing products (cool roof) and removed the designations of roof weight, §150.1(c)11.
- For alterations, a prescriptive tradeoff is allowed between insulation and cool roofs, §150.2(b)1H.
- More efficient fenestration (lower U-factor) and higher levels of shading (lower SGHC) are required in specific climate zones.
- Dynamic Glazing also known as smart windows can now be accounted for energy compliance.
- Window Films can be used to meet the shading requirements for alterations to existing buildings.

  Prescriptive component packages C and E have been removed. There is now only one prescriptive component package, Package A (previously component package D).

3.3 Compliance Options

Public Resources Code, Section 25402.1 (b) requires the California Energy Commission to establish a formal process for certification of compliance options of new products, materials, designs or procedures that can improve building efficiency levels established by the *Building Energy Efficiency Standards*. §10-109 of the Standards allows for the introduction of new calculation methods and measures which cannot be properly accounted for in the current approved compliance approaches. This process for approval of new products, materials, procedures, and calculation methods is called compliance options and helps to improve building efficiency levels set by the Standards.

The Energy Commission encourages the use of energy-saving techniques and designs for showing compliance with the standards. The compliance options process allows the

Energy Commission to review and gather public input regarding the merits of new compliance techniques, products, materials, designs, or procedures to demonstrate compliance for newly constructed buildings, additions, and alterations to existing buildings. Approved compliance options are generally carried for use with the newer energy code when revisions are made to the standards and information regarding their use and eligibility and/or installation criteria are incorporated in compliance and reference manuals.

When the Energy Commission approves a new compliance option it is listed in the Special Cases section of the Energy Commission's website based on the adoption year of the standards: http://www.energy.ca.gov/title24/2008standards/special_case_appliance/.

Compliance Overview

Mandatory Features and Devices

§150.0

When compliance is being demonstrated with either the prescriptive or performance compliance paths, there are mandatory measures that must be installed. Minimum mandatory measures must be met regardless of the method of compliance being used. For example, a building may comply using performance computer modeling software with only a U-factor of U-0.41 insulation in a wood-framed attic roof, but a U-factor of at least U-0.031 must be installed because that is the mandatory minimum.

Prescriptive Compliance Approach

Standards Table 150.1-A

The prescriptive requirements are the simplest way to comply with the building envelope requirements but offer little flexibility. If each and every prescriptive requirement is met, the building envelope complies with the standards. The prescriptive envelope requirements are prescribed in §150.1 which include Table 150.1-A.

The prescriptive compliance approach consists of meeting specific requirements for each envelope component, plus meeting all minimum mandatory requirements, such as mandatory levels of insulation. Prescriptive requirements apply to:

- roofs and ceilings,
- exterior roofing products
- exterior walls
- floors

Fenestration must meet prescriptive efficiency values and have a maximum area of 20% of the window-to-wall ratioconditioned floor area (CFA). The efficiency values are specified for the maximum U-factor, maximum Solar Heat Gain Coefficient (SHGC) and maximum west facing area of 5% of the CFA. Specific requirements are made for glazing in doors, tubular skylights, non-tubular skylights, and chromatic type glazing (§150.1(c)3A).

Performance Approach

§150.1

The prescribed mandatory measures and prescriptive requirements affect the design and operation of the building. Mandatory measures, prescriptive requirements and operational schedules establish a minimum performance level which can be exceeded by other design measures and construction practices resulting in greater energy savings.

The performance approach is a more sophisticated compliance method and it offers greater design flexibility than the prescriptive approach. The performance approach may be used for any unique design element(s) that the user of compliance modeling software believes can contribute to the building's overall energy use.

The performance approach allows for more energy tradeoffs between building features, such as increasing HVAC equipment efficiency in order to allow more fenestration area. See Section 3.8 and Chapter 9 for a more complete discussion of the performance approach.

3.4 Key Envelope Compliance Terms

Elements of the building envelope significantly contribute to its energy efficiency. Several features are important to note when a method is chosen to demonstrate compliance. Components of the building envelope include walls, floors, the roof and/or ceiling, and fenestration. Details for compliance of fenestration are addressed in Section 3.5, Fenestration.

Walls and Space(s) Surrounding Occupancy Uses

Envelope and other building component definitions are listed in §100.1 of the 2013 Standards, and the Reference Appendices.

Envelope requirements vary by envelope component and are a function of their type of construction, their orientation and the space conditions on either side of the envelope surface. Additional envelope component definitions are as follows:

- An **exterior partition or wall** is an envelope component (roof, wall, floor, window etc.) that separates conditioned space from ambient (outdoor) conditions.
- A **demising partition or wall** is an envelope component that separates conditioned space from an unconditioned space.
- A **conditioned space** is either directly conditioned or indirectly conditioned (see Section 100.1 for full definition). An indirectly conditioned space has less thermal resistance to a directly conditioned space than to the outside. An unconditioned space is enclosed space within a building that is not directly conditioned, or indirectly conditioned.
- A **plenum** is a space below an insulated roof and above an uninsulated ceiling. It is an indirectly conditioned space as there is less thermal resistance to the directly conditioned space below than to the ambient air outside. In comparison, an attic below an uninsulated roof and having insulation on the attic floor is an unconditioned space because there is less thermal resistance to the outside than across the insulated ceiling to the conditioned space below. A plenum can also be the space between the underside of a raised

floor and the crawl space ground, and is sometimes used as an air supply for the building when the exterior foundation is sealed to the outside.

- **Sloping surfaces** are considered either a wall or a roof, depending on the slope (see Figure 3-1). If the surface has a slope of less than 60° from horizontal, it is considered a roof; a slope of 60° or more is a wall. This definition extends to fenestration products, including windows in walls and any skylight types in roofs.

- Floors and roof/ceilings do not differentiate between demising and exterior. Thus an **exterior roof/ceiling** "is an exterior partition, or a demising partition, that has a slope less than 60 degrees from horizontal, that has conditioned space below," ambient conditions or unconditioned space above "and that is not an exterior door or skylight."
- Similarly an "exterior floor/soffit is a **horizontal exterior partition**, or a horizontal demising partition, under conditioned space" and above an unconditioned space or above ambient (outdoor) conditions.

Vapor Retarders and Moisture Protection

- A **vapor retarder** or barrier is a special covering over framing and insulation or covering the ground of a crawl space that protects the assembly components from possible damage due to moisture condensation. During cold weather, the inside of the house is warm and moist (from breathing, showers, etc.) and the outside is cold and dry. Moisture moves from more to less and from warm to cold. When the moisture (in vapor form) reaches a point in the wall or roof assembly that has a temperature below the dew point, it will condense into liquid water. Water build up can cause structural damage, create mold that may contribute to indoor air quality problems and can cause the insulation to lose its effectiveness.
- **Fenestration** or **Windows** are considered part of the exterior wall because the slope is typically over 60°. Where the slope of fenestration is less than 60°, the glazing indicated as a window is considered a skylight.

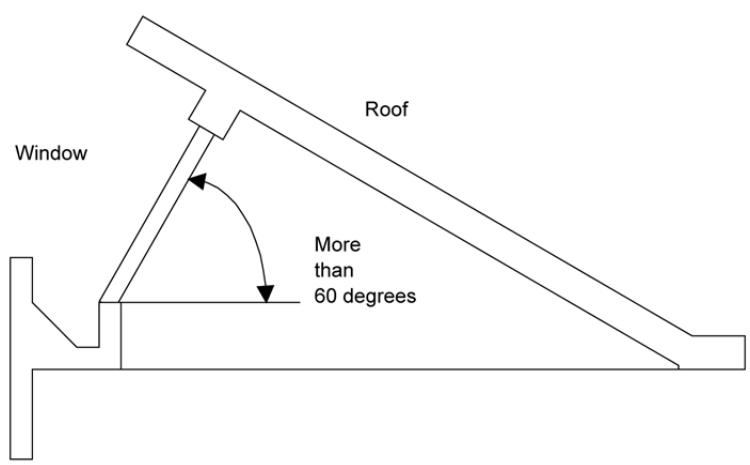

Figure 3-1 – Slope of a Wall or Window (Roof or Skylight slope is less than 60°)

-

- **Roofing Products (Cool Roof)**

  Roofing products with a high solar reflectance and thermal emittance are referred to as "cool roofs." These roofing types absorb less solar heat and give off more heat to their surroundings than traditional roofing material. These roofs are cooler and thus help reduce air conditioning loads by reflecting and emitting energy from the sun. Roof radiative properties are rated and listed by the Cool Roof Rating Council (CRRC) (http://www.coolroofs.org/).

  In general, light-colored high reflectance surfaces reflect solar energy (visible light, invisible infrared and ultraviolet radiation) and stay cooler than darker surfaces that absorb the sun's energy and become hot.

  The standards specify radiative properties that represent minimum "cool roof performance" qualities of roofing products:

  - Solar reflectance—the fraction of solar energy that is reflected by the roof surface
  - Thermal emittance—the fraction of thermal energy that is emitted from the roof surface

  Both solar reflectance and thermal emittance are measured from 0 to 1; the higher the value, the "cooler" the roof. There are numerous roofing materials in a wide range of colors that have relatively good cool roof properties. Excess heat can increase the building's air conditioning load resulting in increased air conditioning energy needed for maintaining occupant comfort. High-emitting roof surfaces reject absorbed heat quickly (upward and out of the building) than darker roof surfaces with low-emitting properties.

  The standards prescribe cool roof radiative properties for low-sloped and steep-sloped roofs (§150.1(c)11). A low-sloped roof is defined as a surface with a pitch less than or equal to 2:12 (9.5 degrees from the horizon), while a steep-sloped roof is a surface with a pitch greater than 2:12 (9.5 degrees from the horizon). Because solar heat gain is based on the sun's angle of incidence on a surface, low-sloped roofs receive more solar radiation than steep-sloped roofs in the summer when the sun is high in the sky.

Example 3-1

Question

I am a salesperson and represent some roofing products, and many of them are on the EPA's Energy Star list for cool roofing materials. Is this sufficient to meet Standards?

Answer

No. Energy Star has different requirements for reflectance and NO requirements for emittance. Per Section10-113 of the Energy Building Regulations, the Cool Roof Rating Council (http://www.coolroofs.org) is the only entity currently recognized by the Energy Commission to determine what qualifies as a cool roof.

Example 3-2

Question

How does a product get CRRC cool roof certification?

Answer

Any party wishing to have a product or products certified by CRRC should contact CRRC to get started call toll-free (866) 465-2523 from inside the US or (510) 485-7176, or email info@coolroofs.org. CRRC staff will walk interested parties through the procedures. In addition, CRRC publishes the procedures in "CRRC-1 Program Manual," available for free on http://www.coolroofs.org or by calling CRRC. However, working with CRRC staff is strongly recommended.

Example 3-3

Question

I understand reflectance, but what is emittance?

Answer

Even a material that reflects the sun's energy will still absorb some of that energy as heat; there are no perfectly reflecting materials being used for roofing. That absorbed heat undergoes a physical change (an increase in wavelength, for readers who remember physics) and is given off – emitted – to the environment in varying amounts by various materials and surface types. This emittance is given a unitless value between 0 and 1, and this value represents a comparison (ratio) between what a given material or surface emits and what a perfect blackbody emitter (again, recall physics) would emit at the same temperature.

A higher emittance value means more energy is released from the material or surface; scientists refer to this emitted energy as thermal radiation (as compared to the energy from the sun, solar radiation, with shorter wavelength). Emittance is a measure of the relative efficiency with which a material, surface, or body can cool itself by radiation. Lower-emitting materials become relatively hotter for not being able to get rid of the energy, which is heat. Roof materials with low emittance therefore hold onto more solar energy as heat, get hotter than high-emittance roofs, and with help from the laws of physics, offer greater opportunity for that held heat to be given off downward into the building through conduction. More heat in the building increases the need for air conditioning for comfort. A cool roof system that reflects solar radiation (has high reflectance) and emits thermal radiation well (has high emittance) will result in a cooler roof and a cooler building with lower air-conditioning costs.

Air Leakage

Infiltration is the *unintentional* replacement of conditioned air with unconditioned air through leaks or cracks in the building envelope. It is a major component of heating and cooling loads. Air leakage can occur through holes and cracks in the building envelope and around doors and fenestration framing areas. Ventilation is the *intentional* replacement of conditioned air with unconditioned air through open windows and skylights or mechanical ventilation.

Reducing air leakage in the building envelope can result in significant energy savings, especially in climates with more severe winter and summer conditions. It also can result in improved building comfort, reduced moisture intrusion, and fewer air pollutants.

Advanced Assemblies

Common strategies for exceeding the minimum energy performance level set by the 2013 Standards include the use of better components such as: higher insulation levels, more efficient fenestration, reducing the building's air leakage, using radiant barriers, "cool" roofing products, better framing techniques that accommodate more insulation (raised-heel truss) and reduce thermal bridging across framing members, greater use of non-framed assemblies or panelized systems (SIPs and ICFs), and more efficient heating, cooling and water heating equipment. The Energy Commission encourages the use of energy savings techniques for showing compliance with the standards. Innovative designs and practices are discussed in the "Advanced Assembly System" section.

Advanced Building Design

The building's design, its floor plan and site design layout impact energy use. A passive solar designed building uses elements of the building to help heat and cool itself as opposed to relying on mechanical systems to provide the building's thermal energy needs. Passive solar strategies encompass several advanced high performance envelope techniques, such as:

- Carefully choosing the size, type and placement of fenestration and shading
- Providing and controlling fresh air ventilation during the day or night
- Having internal and external thermal mass components that help store useful heat and cooling energy
- Having highly insulated envelope assemblies
- Using radiative energy performing roofing materials (cool roofs) and radiant barriers
- Having very low air leakage

Some measures included as part of an Advanced Assembly System may require specific installation procedures, or field verification and diagnostic testing to ensure their proper performance. Field verification and diagnostic testing is a way to ensure that the energy efficiency that is used in compliance calculations is actually realized as an energy benefit by the homeowner.

3.5 Fenestration

Windows, glazed doors, dynamic glazing, window films, and skylights have a significant impact on energy u-2e in a home. Fenestration accounts for a large impact on heating and cooling loads of residential and high-rise residential space conditioning loads, the size, orientation, and types of fenestration products can dramatically affect the overall energy performance of a house. Glazing type, orientation, shading and shading devices not only play a major role in the building's energy use, but can affect the load operation of the HVAC system and the comfort of occupants.

3.5.1 Fenestration Types

When choosing a new or replacement window, it's always best to look for a National Fenestration Rating Council (NFRC) rated label sticker on the window. The Energy Performance Ratings label is designed to help consumers identify a rating, or a measurement scale that is reflective of a window's energy performance. This will help the consumer or designer to compare the energy efficiency of window and glazed door products, per different brands and manufacturers as well.

The following NFRC label sticker provides information about the energy performance rating by listing identifiers; U-factors, Solar Heat Gain Coefficient (SHGC), Visible Transmittance (VT), and Air Leakage (AL) which helps provide accurate information for the consumer or designer. The label references the following information:

- **U-factor** measures the rate of heat loss through a product. Therefore, the lower the U-factor, the lower the amount of heat loss. In cold climates where heating bills are a concern, choosing products with lower U-factors will reduce the amount of heat that escapes from inside the house.
- **The Solar Heat Gain Coefficient (SHGC)** measures the percentage of heat in radiant heat that passes through a fenestration product. Therefore, the lower the SHGC, the less amount of solar heat gain. In hot climates where air conditioning bills are a concern, choosing products with a lower SHGC will reduce the amount of heat that comes in from the outside.
- **Visible Transmittance (VT)** measures the percent amount of light that comes through a fenestration product. The higher the VT rating, the more light is allowed through a window or glazed door. Skylight's significantly allows more lighting and can be as efficient as vertical windows.

- **Air Leakage (AL)** is a measurement of heat loss and gain by infiltration through cracks in the window assembly and it affects the occupant comfort. The lower the AL, the less air will pass through cracks in the window assembly.

There are three primary categories of fenestration:

1. **WINDOWS**

   A window is fenestration including skylights that is an assembled unit consisting of a frame and sash component holding one or more pieces of glazing. New advances in framing material such as composites, fiberglass and vinyl help improve the energy efficiency of all fenestration products. New technology has advanced the glass industry to include reflective coatings such as silver, gold, bronze, low-e, low-e^2, or low-e^3 which can be applied to clear and tinted glass.

   The following is a list of sub-categories of fenestration;

   - **Manufactured Fenestration** is a fenestration product constructed of materials which are factory cut or otherwise factory formed with the specific intention of being used to fabricate a fenestration product. Knocked down or partially assembled products may be sold as a fenestration product when provided with temporary and permanent labels as described in Section 10-111; or as a site-built fenestration product when not provided with temporary and permanent labels as described in Section 10-111.
   - A window is considered **Field-fabricated** when the windows are assembled at the building site from the various elements that are not sold together as a fenestration product (i.e., glazing, framing and weather stripping). Field-fabricated does not include site-assembled frame components that were manufactured elsewhere with the intention of being assembled on site (such as knocked down products, sunspace kits, and curtain walls).
   - **Site-built Fenestration** is designed to be field-glazed or field assembled units using specific factory cut or otherwise factory formed framing and glazing units that are manufactured with the intention of being assembled at the construction site. These include store front systems, curtain walls or large track sliding glass walls and atrium roof systems.
   - **Dynamic Glazing** is a glazing system that has the ability to reversibly change its performance properties, including U-factor, Solar Heat Gain Coefficient (SHGC), and Visible Transmittance (VT) between well-defined end points. These may include, but are not limited to chromogenic glazing systems and integrated shading systems. Dynamic Glazing systems may include internally mounted or externally mounted shading devices that attach to the window framing/glazing that may or may not be removable, but only if they are part of the original window, door or skylight assembly and the assembly is labeled as such.
   - **Windows Films** Window Films were originally developed in the early 1950's, and are mostly made of polyester substrate that is durable, tough and highly flexible. It absorbs little moisture and has both high arid and low temperature resistances. Polyester film offers crystal clarity and can be pre-treated to accept different types of coatings for energy control and long term performance. Window films are made with a special scratch resistant coating on one side and with a mounting adhesive layer on the other side. The

adhesive is normally applied to the interior surface (room side) of the glass, unless it is a film specifically designed for the exterior window surface.

2. GLAZED DOORS

Glazed door is an exterior door having a glazed area of 50 percent or more of the area of the door. These doors are typically installed in exterior walls that separate conditioned space from exterior ambient or unconditioned space. When the door is less than 50 percent it will no longer be considered a glazed door but is a door. The glass area will still have to be counted towards the overall glass area of the conditioned space.

3. SKYLIGHTS

Skylights are an exceptional source of daylight and passive solar heating, illuminating rooms with direct and indirect sunlight. In addition, when used appropriately, daylighting can increase the quality of room light and reduce dependence upon electrical lighting. On the other hand, skylights don't typically have the same thermal properties as vertical fenestration, and can be prone to greater heat loss in winter and solar heat gain during the summer. When a window designer optimizes the whole envelope glazing arrangement for good daylight and thermal control, significant heating and cooling energy savings can be realized, especially when skylights with the same technology as efficient vertical windows are used.

3.5.2 Relevant Sections in the Standards for Fenestration

- §10-111 (Administrative Standards) establishes the rules for rating and labeling fenestration products and establishes the NFRC as the supervising authority.
- §110.6(a)1 sets air leakage requirements for all manufactured windows, doors and skylights whether they are used in residential or nonresidential buildings.
- §110.6(a)2 through 4 requires that the U-factor, solar heat gain coefficient (SHGC), and visible transmittance (VT) for manufactured fenestration products be determined using NFRC procedures or use default values.
- §110.6(a)5 requires that manufactured fenestration products have both a temporary and permanent label. The temporary label shall show the U-factor, SHGC and the VT and verify that the window complies with the air leakage requirements.
- §110.6(b) field-fabricated fenestration that do not have an NFRC rating shall use the CEC default U-factors, SHGC and optional VT values.
- §110.7 requires that openings around windows, skylights and doors be caulked, gasketed, weatherstripped or otherwise sealed to limit air leakage.
- §150.0(q) requires a mandatory U-factor of 0.58 or a maximum weighted average U-factor of 0.58 for windows and skylights separating conditioned space from unconditioned space or the outdoors. An exception allows the greater of 10 ft^2 or 0.5% of the conditioned floor area to exceed 0.58 U-factor.
- §150.1(c)3 and 4 meet the prescriptive requirements for fenestration and shading in low-rise residential buildings. These include requirements for maximum glazing area, maximum U-factor, and for some climate zones, a maximum SHGC requirement.
- §150.1(c)3A, in addition to be basic fenestration allowance of 20% of CFA, Exception 1 allows each dwelling unit to have up to 3 ft^2 of glazing installed in doors and up to 3

ft^2 of tubular daylighting device with dual-pane diffusers to have an assumed U-factor and SHGC equivalent to the Package requirements.

- §150.1(c)3A, in addition to be basic fenestration allowance of 20% of CFA, Exception 2 allows up to 16 ft^2 of the skylights to have up to 0.55 U-factor and up to 0.30 SHGC in each dwelling.
- §150.1(c)3A Exception 3 allows automatically controlled chromogenic glazing (a type of dynamic glazing) to assume the lowest U-factor and SHGC when connected to automatically controls that modulate the amount of heat flow into space in multiple steps in response to solar intensity, chromogenic glazing shall be considered separately from other fenestration, and must be not be weight averaged with other fenestration.
- §150.1(c)3A Exception 4 specifies that if a residential dwelling unit contains a combination of manufactured and site-built fenestration; only the site-built fenestration can be determined by using Nonresidential Reference Appendix NA6; however, all fenestration and including sit-built can also default to TABLES 110.6-A or B.
- §150.1(c)3B establishes a prescriptive limit that the prescriptive maximum total fenestration area shall not exceed the percentage of conditioned floor area (CFA) indicated in TABLE 150.1-A. Total fenestration includes skylights and west-facing glazing.
- §150.1(c)3C states that when west-facing glazing is limited by Package A, west-facing includes skylights tilted in any direction when the pitch is less than 1:12.
- §150.2(a) sets the prescriptive fenestration area requirements for residential additions as well as other prescriptive requirements for new windows. Performance compliance options (existing plus addition) are also available.
- §150.2(b) establishes the prescriptive requirements for replacement windows in existing residences. Performance compliance options (existing plus alteration) are also available.

3.5.3 Mandatory Measures, Feature and Devices

Air Leakage

Applicable Sections : §110.6(a)1; §110.7

Manufactured fenestration products, including exterior doors, must be tested and certified to leak no more than 0.3 cubic feet per minute (cfm) per ft^2 of the window area.

This mandatory measure applies to all manufactured windows that are newly installed in residential, high-residential or existing buildings. To determine leakage, the standard test procedure requires manufacturers to use is either NFRC 400 or ASTM E283 at a pressure differential of 75 Pascal (or 1.57 pounds/ft^2).

Site-built Products. There are no specific air leakage requirements for site-built fenestration products but the Standards require limiting air leakage through weatherstripping and caulking.

"Note In the case when unrated NFRC site-built fenestration is used in a residential application there is an alternative procedure to calculate the default thermal efficiencies U-factor and SHGC values of such products. Using this alternative may not result in meeting

the prescriptive values as listed in Table 150.1-A. However, it may be used in the Performance Approach. The alternative calculation can be found in the Reference Nonresidential Appendices NA6."

Field-fabricated Products. No air leakage testing is required for field-fabricated fenestration products; however, the Standards still require limiting air leakage through weatherstripping and caulking.

Exterior Doors. Exterior doors must meet the following requirements:

- Manufactured exterior doors must be certified as meeting an air leakage rate of 0.3 cfm/ft² of door area at a pressure differential of 75 Pascal, which is the same as windows.
- Exterior doors must comply with the requirements of §110.7, as described in "Joints and Other Openings," e.g., they must be caulked and weatherstripped if field-fabricated.
- Any door whose surface area has greater than 50 percent glass is considered as a glazed door and must comply with the Mandatory and applicable Prescriptive and Performance requirements of §150.0, §150.1, and §150.2.
- Alternatively, if less than 50 percent of glass the area may be exempt in accordance with one of the exceptions of §150.0, §150.1, and §150.2.
-

U-factor and SHGC Rating Mandatory Requirements

Applicable Sections : §110.6(a)2 and §110.6(a)3; TABLE 110.6-A and TABLE 110.6-B

Requiring that U-factor and SHGC be calculated using a standardize procedure ensures that the thermal performance or efficiency data for fenestration products are accurate and the data provided by different manufacturers within each fenestration type (windows, doors, skylights, TDDs) can be easily compared to others within that type and can be independently verified.

For manufactured fenestration products, the mandatory requirements are that the U-factor and Solar Heat Gain Coefficient (SHGC) be rated by NFRC and be listed in NFRC's Certified Product Directory (CPD). The test procedure for U-factor is NFRC 100, and for SHGC is NFRC 200 and NFRC-200, NRC-202 or ASTM E972 for translucent panels and NFRC-203 for tubular daylighting devices skylights (TDDs), and for certain type of skylights.

At the time of field inspection, the field inspector verifies the fenestration U-factor and SHGC values meets the energy compliance values by checking the NFRC label sticker on the window.

Alternatively, when manufacturers do not rate the thermal efficiencies by NFRC procedures, the Energy Commission default values must be used and documented on a temporary default label. See Sample Default Label Figure 3-2.

Note: If no labels are available on site for verification, the field inspector should cease any further installation of fenestration until proof of efficiency (label) is produced on site or filed in the field office. In cases when proof is not met then the field inspector can cease construction until the architect/ specifier can produce such labels.

The Energy Commissions default U-factors are listed in TABLE 110.6-A, and the default SHGC values are listed in TABLE 110.6-B (also in Appendix B of this compliance manual).

Note: While there is no minimum VT value requirement for residential compliance, the value may be shown on the temporary label for information only. A listing of NFRC certified ratings is available at http://www.NFRC.org.

Energy Commission (CEC) default values in TABLE 110.6-A and TABLE 110.6-B in the Standards list the worst possible values that can be assumed when fenestration is not rated by NFRC. To get credit for high performance window features such as low-e (low-emissivity) coatings and thermal break frames, the window manufacturer must have the window tested, labeled, and certified according to NFRC procedures.

Site-built Fenestration Products. For low-rise residential construction, site-built products are treated the same as manufactured products: proof of U-factor and SHGC values must come from NFRC ratings or from Standards default TABLE 110.6-A and TABLE 110.6-B.

Note: When only unrated site-built fenestration is used in a residential application there is an alternative procedure to calculate the default U-factor and SHGC values. Though using this alternative may not result in meeting the prescriptive values as required by Table 150.1-A. The alternative calculation can be found in the Reference Nonresidential Appendices NA6 or it may require to use the performance approach to meet energy compliance.

Field-fabricated Products §110.6(b). Field-fabricated fenestration must always use the Energy Commission default U-factors from Standards TABLE 110.6-A and SHGC values from TABLE 110.6-B. There is no minimum requirement for VT, but only used for informational purposes.

For acceptable methods of determining U-factor and SHGC are shown in Table 3-1A and Table 3-1B respectively.

Table 3-1A – Acceptable Methods for Determining U-factor

	Fenestration Category				
U-factor Determination Method	Manufactured Windows	Manufactured Skylights	Site-Built Fenestration (Vertical& Skylight)	Field-Fabricated Fenestration	Glass Block
NFRC's Component Modeling Approach (CMA)[1]	✓	✓	✓	N/A	N/A
NFRC-100	✓	✓	✓	N/A	N/A
Standards Default Table 110.6-A	✓	✓	✓	✓	✓
NA6[2]	N/A	N/A	✓	N/A	N/A

1. *The NFRC Residential CMA method is an option that may be available during the 2013 cycle of the Energy Standards.*
2. *The Alternative Default U-factors from Nonresidential Reference Nonresidential Appendix NA6 may only be used for site-built vertical and skylights having less than 1,000ft^2.*

Table 3-1B – Methods for Determining Solar Heat Gain Coefficients

Fenestration Category					
SHGC Determination Method	Manufactured Windows	Manufactured Skylights	Site-Built Fenestration (Vertical& Skylight)	Field-Fabricated Fenestration	Glass Block
NFRC's Component Modeling Approach (CMA)[1]	✓	✓	✓	N/A	N/A
NFRC-200	✓	✓	✓	N/A	N/A
Standards Default Table 110.6-B	✓	✓	✓	✓	✓
NA6[2]	N/A	N/A	✓	N/A	N/A

1. *The NFRC Residential CMA method is an option that may be available during the 2013 cycle of the Energy Standards.*
2. *The Alternative Default U-factors from Nonresidential Reference Nonresidential Appendix NA6 may only be used for site-built vertical and skylights having less than 1,000ft^2.*

Labeling Mandatory Requirements

Applicable Sections: §10-111(a); §110.6(a)5

Default Temporary Label

The manufacturer can also choose to use Energy Commission (CEC) default values from TABLE 110.6-A for U-factors and TABLE 110.6-B for SHGC. If default values are used, the manufacturer must attach a temporary label meeting the following specific requirements (permanent etching labels are not required). Product shall meet the air infiltration requirements of §110.6(a)1, U-factor criteria of §110.6(a)2, and SHGC criteria of §110.6(a)3 in the *Building Energy Efficiency Standards for Residential and Nonresidential Buildings.*

Although there is no exact format for the default temporary label, it must be clearly visible and large enough for the enforcement agency field inspectors to read easily and it must include all information required by the standards. The minimum suggested label size is 4 in. x 4 in. and the label must have the following words at the bottom of the label as noted in Figure 3-2;

> *"Product meets the air infiltration requirements of §110.6(a)1, U-factor criteria of §110.6(a)2, SHGC criteria of §110.6(a)3 and VT criteria of §110.6(a)4 of the 2013 California Building Energy Efficiency Standards for Residential and Nonresidential Buildings."*

The manufacture ensures the U-factor and SHGC default values should be large enough to be visible from 4 feet away. The manufacturer ensures the appropriate checkboxes are checked and indicated on default label.

2013 California Energy Commission Default Label XYZ Manufacturing Co.		
Key Features:	☐ Doors	☐ Double-Pane
	☐ Skylight	☐ Glass Block
Frame Type	**Product Type:**	**Product Glazing Type:**
☐ Metal	☐ Operable	☐ Clear
☐ Non-Metal	☐ Fixed	☐ Tinted
☐ Metal, Thermal Break	☐ Greenhouse/Garden Window	☐ Single-Pane
☐ Air space 7/16 in. or greater ☐ With built-in curb ☐ Meets Thermal-Break Default Criteria	----------	To calculate VT see NA6
California Energy Commission Default U-factor =	**California Energy Commission** Default SHGC =	**California Energy Commission** Calculated VT =
Product meets the air infiltration requirements of §110.6(a)1, U-factor criteria of §110.6(a)2, SHGC criteria of §110.6(a)3 and VT criteria of §110.6(a)4 of the 2013 Building Energy Efficiency Standards for Residential and Nonresidential Buildings.		

Figure 3-2 – Sample of Default Temporary Label

Certified Temporary and Permanent Labels

Applicable Section: §10-111

Certified Manufactured Fenestration Products

The Standards require that manufactured fenestration have both temporary and permanent labels. The temporary label shows the U-factor and SHGC, on for each rated window. The label must also show that the window meets the air infiltration criteria. The temporary label must not be removed before inspection by the enforcement agency.

The **permanent label** must, at a minimum, identify the certifying organization and have an ID number or code to allow tracking back to the original information on file with the certifying organization, NFRC. The permanent label also can be inscribed on the spacer, etched on the glass, engraved on the frame, or otherwise located so as not to affect aesthetics.

Field-Fabricated Fenestration

A label is not required for field-fabricated fenestration products, but the CEC default values in TABLE 110.6-A and TABLE 110.6-B from the Standards must be used and documented on the Fenestration Certificate NRCC-ENV-05-E (formerly FC-1) form.

Example 3-4

Question

My new home will have a combination of window types, including fixed, operable, wood, metal, etc., some of which are field-fabricated. What are the options for showing compliance with the Standards?

Answer

First, all windows must meet the mandatory requirements of §110.6 and §110.7 unless exempted.

For field-fabricated windows, you must select U-factors and SHGC values from the default tables (TABLE 110.6-A and TABLE 110.6-B from the Standards). Windows that are not field-fabricated must be labeled with an NFRC certified or default efficiencies. If the U-factors or SHGC values do not comply with the prescriptive requirements, the performance method must be used. To simplify data entry into the compliance software, you may choose the U-factor from TABLE 110.6-A that is the highest of any of the windows planned to be installed, and use this for all windows for compliance purposes. However, you must use the appropriate SHGC from TABLE 110.6-B for each individual window type being installed.

Example 3-5

Question

When windows are labeled with a default value, are there any special requirements that apply to the label?

Answer

First, all windows must meet the mandatory requirements by §110.6 and §110.7 unless exempted.

There are two criteria that apply to fenestration products labeled with default values.

First, the Administrative Regulations (§10-111) require that the words “CEC Default U-factor” and “CEC Default SHGC” appear on the temporary label in front of or before the U-factor or SHGC (i.e., not in a footnote).

Second, the U-factor and SHGC for the specific product must be listed. If multiple values are listed on the label, the manufacturer must identify, in a permanent manner, the appropriate value for the labeled product. Marking the correct value may be done in the following ways only:

1. Circle the correct U-factor and SHGC (permanent ink);

2. Black out all values except the correct U-factor and SHGC (permanent ink); or

3. Make a hole punch next to the appropriate values.

Example 3-6

Question

What U-factor do I use for an operable metal framed, glass block? What solar heat gain coefficient do I use for clear glass block? Does it need a label?

Can I use the default clear glass SHGC values for tinted glass block?

Answer

For glass block, use the U-factor and SHGC values from Standards TABLE 110.6-A and TABLE 110.6-B for the frame type in which the glass blocks are installed. The worst-case scenario would be metal-framed glass. The U-factor for metal framed glass block is from TABLE 110.6-A is 0.87. The SHGC depends on whether the glass block has a metal or non-metal frame, and is operable or fixed or clear or tinted. For this example, the glass block is operable and clear, therefore the SHGC is 0.70. Glass block is considered a field-fabricated product and therefore does not need a label.

Yes, the default tables for glass block do not include tinted glass.

Example 3-7

Question

Is there a default U-factor for the glass in sunrooms?

Answer

Yes. For the horizontal or sloped portions of the sunroom glazing, use the U-factor for skylights. For the vertical portions, use the U-factors for fixed windows, operable windows, or doors, as appropriate. As a simplifying alternative, the manufacturer may label the entire sunroom with the highest U-factor of any of the individual fenestration types within the assembly.

Example 3-8

Question

How are various door types treated in compliance documentation for U-factor and SHGC? How can I determine a U-factor and SHGC for doors when less the 50% of the door area is glass?

Answer

All doors with glass area greater than 50% of the door area, which includes French doors, are defined as fenestration products and are covered by the NFRC Rating and Certification Program. The U-factor SHGC for doors with glass area greater than 50% may be determined in one of two ways:

1. Use the NFRC rated and labeled values.

2. Refer to Standards TABLE 110.6-B, the values are based upon glazing and framing type.

3. In special cases were site-built fenestration is being installed in a residential application the site-built windows can use an alternative method to calculate the U-factor and the SHGC by using the manufacturer's center-of-glass values (COG). The COG values are calculated in accordance with Nonresidential Reference Appendix NA6. Note the maximum allowed of site-built fenestration is less than 1,000 ft^2.

Doors with less than 50% glass areas are treated as a door with fenestration installed within the door. The glass area is calculated as the sum of the glass areas plus two inches on all sides (to account for framing). For prescriptive or performance approaches, use one of the following options for U-factor and SHGC of the glass:

• The NFRC label if one is available, or

• The default values from Standards TABLE 110.6-A and 110.6-B

The opaque part of the door is ignored in the prescriptive approach. If the performance approach is used a default SHGC value of 0.50 must be assumed for the opaque portion of the door. Alternatively, if NFRC values for U-factor and SHGC for the entire door are available, the door may be considered a fenestration product.

Example 3-9

Question

As a manufacturer of fenestration products, I place a temporary label with the air infiltration rates on my products. Can you clarify which products must be tested and certified?

Answer

Each product line must be tested and certified for air infiltration rates. Features such as weather seal, frame design, operator type, and direction of operation all affect air leakage. Every product must have a temporary label certifying that the air infiltration requirements are met. This temporary label may be combined with the temporary U- factor, SHGC and VT label.

Example 3-10

Question

Is a custom window “field-fabricated” for purposes of meeting air infiltration requirements?

Answer

No. Most custom windows are manufactured and delivered to the site either completely assembled or “knocked down,” which means they are a manufactured product. A window is considered field-fabricated when the windows are assembled at the building site from the various elements that are not sold together as a fenestration product (i.e., glazing, framing and weatherstripping). Field-fabricated does not include site-assembled frame components that were manufactured elsewhere with the intention of being assembled on site (such as knocked down products, sunspace kits, and curtain walls).

Example 3-11

Question

What constitutes a “double-pane” window?

Answer

Double-pane (or dual-pane) glazing is made of two panes of glass (or other glazing material) separated by space (generally 1/4" [6 mm] to 3/4" [18 mm]) filled with air or other gas. Two panes of glazing laminated together do not constitute double-pane glazing.

Example 3-12

Question

To get daylight into a room in my new house, I plan on installing a tubular skylight and will be using the performance approach for compliance purposes. The skylight has a clear plastic dome exterior to the roof, a single pane ¼-inch (6 mm)-thick acrylic diffuser mounted at the ceiling, and a metal tube connecting the two. How do I determine the U-factor and SHGC that I will need to determine if I can comply with the Standards, if U_c is 1.20 and $SHGC_c$ is 0.85?

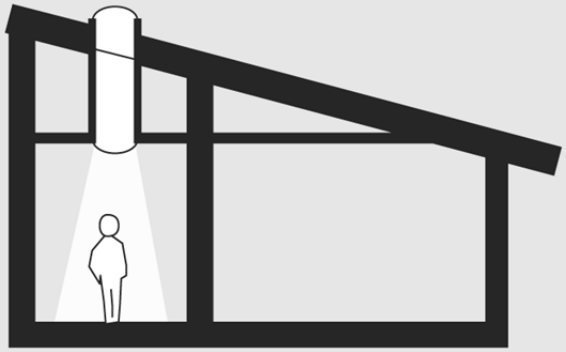

Answer

Tubular daylighting device (TDD) skylights are an effective means for bringing natural light into interior spaces, as are traditional skylights.

There are three methods available for determining the thermal efficiencies for TDDs:

The first is to use the default U-factor from Standards TABLE 110.6-A. This tubular skylight would be considered a metal frame, fixed, single-pane skylight resulting in a U-factor of 1.19, which must appear on a label preceded by the words “CEC Default U-factor.” (A tubular daylighting device skylight would have to have two panes of glazing with an air space of less than 2 inches (50 mm) between them at the plane of the ceiling insulation for it to be considered double-pane.);

The second method is to determine the U-factor from the Reference Nonresidential Appendix NA6, Equation NA6-1. The U-factor for this tubular daylighting device skylight would be based on metal with no curb (Table NA6-5). The U-factor for this skylight, using Equation NA6-1, is 1.25, where U_t = (0.195 + (0.882 x 1.20)). This must appear on a label stated as "CEC Default U-factor 1.25.";

The third and best method, applicable if the skylight has been tested and certified pursuant to NFRC procedures, requires a label that states: "Manufacturer stipulates that this rating was determined in accordance with applicable NFRC procedures NFRC 100", followed by the U-factor.

There also are three methods available for determining SHGC. The first is to use the default table SHGC in Standards TABLE 110.6-B. This tubular skylight would be considered a metal frame, fixed, clear, single-pane skylight resulting in an SHGC of 0.83, which must appear on a label stated as "CEC Default SHGC 0.83."

The second method also determines the SHGC from the Reference Nonresidential Appendix NA6, Equation NA6-2. The SHGC for this skylight using Equation NA6-2 is 0.81, where

$SHGC_t$ =(0.08 + (0.86 x 0.85)). This must appear on a label stated as "CEC Default SHGC 0.81."

The third method, applicable if the skylight has been tested and certified pursuant to NFRC procedures, requires a label that states, "Manufacturer stipulates that this rating was determined in accordance with applicable NFRC procedures.

Example 3-13

Question

How would the U-factor and the SHGC be determined if the tubular daylighting device in the example above has a dual pane diffuser (instead of single pane) mounted at the ceiling?

Answer

The procedure would be exactly the same as the example above, except that the double pane U-factor and SHGC values from Standards TABLE 110.6-A and TABLE 110.6-B would be used instead of single pane values. Note that up to 3 ft^2 of tubular daylighting device is assumed to have the U-factor and SHGC required by Package A for prescriptive performance compliance (Exception 1 to §150.1(c)3A).

Fenestration U-factor

Applicable Section: §150.0(q)

With the 2013 update, the mandatory maximum U-factor is set by §150.0(q) for fenestration including skylights to be at maximum U-factor of 0.58. While there is an allowance for area-weighted averaging, this will limit the use of single pane products. Up to 10 ft^2 or 0.5% of conditioned floor area (whichever is greater) is exempt from the maximum U-factor requirement.

Table 3-3 – Maximum U-factors, SHGC and Fenestration Area by Climate Zone in Packages A

Climate Zone	1, 3, 5	2,4,6-16

Maximum U-factor	0.32	0.32
Maximum SHGC	NR	0.25
Maximum Fenestration Area	20%	20%
Maximum West-Facing Fenestration	NR	5%

Figure 3-4 – Package A SHGC Criteria by Climate Zone

3.5.4 Prescriptive Requirements

Applicable Section: §150.1(c)3

Prescriptive requirements described in this chapter typically refer to Package A or Table 150.1-A of the Standards. The maximum U-factor required by prescriptive Package A for all climate zones is 0.32 and the maximum Solar Heat Gain Coefficient (SHGC) is 0.25 or lower for dwellings in climate zones 2, 4, and 6-16. Homes constructed in climate zones 1, 3, and 5 have no maximum SHGC requirements. The requirements apply to fenestration products without consideration of insect screens or interior shading devices. With some exceptions, some fenestration products may exceed the prescriptive requirement as long as the U-factor and SHGC of windows, glazed doors and skylights can be area-weight averaged together to meet the prescriptive requirement using the WS-2R form in Appendix A of this manual.

Fenestration Prescriptive Exceptions

Applicable Section: §150.1(c)3A through §150.1(c)3C

Doors and Tubular Daylighting Device
In each dwelling unit, up to 3 ft^2 of the glazing area installed in doors and up to 3 ft^2 of tubular daylighting devices area with dual-pane diffusers at the ceiling are exempt from the prescriptive U-factor and SHGC requirements, where area is included in the maximum of 20 percent fenestration area. However, the U-factor shall not exceed a maximum is 0.58. See §150.0(q) and Exception 1 of §150.1(c)3A.

Skylights
Each new dwelling unit may have up to 16 ft^2 of skylight area; the area is included in the maximum of 20 percent fenestration area and meets a maximum 0.55 U-factor and a maximum SHGC of 0.30. See Exception 2 of §150.1(c)3A.

Aside from the specific exceptions to the Fenestration Prescriptive requirements, U-factors and SHGCs for skylights can be significantly higher than they are for windows so long as their area weight-averaged U-factor and SHGC do not exceed the 0.55 U-factor and is not greater than the 0.30 SHGC when large amounts of individual skylights are used for prescriptive compliance. Alternatively, the performance approach should be used for meeting energy compliance.

Dynamic Glazing
If a dwelling unit includes a type of dynamic glazing that is chromogenic or integrated shading device, and the glazing is automatically controlled, use the lowest U-factor and lowest SHGC to determine compliance with prescriptive Package A fenestration requirements. Since this type of product has compliance that varies, it cannot be weight averaged with other non-chromogenic products as per Exception 3 of §150.1(c)3A.

Site-Built Fenestration
When residential dwelling unit contains combination of manufactured and site-built fenestration; only site-built fenestration values can be determined by using Nonresidential Reference Appendix NA6; however, all fenestration and including sit-built can default to TABLES 110.6-A or B.

Window Maximum Area
The prescriptive requirements limit total glass area to a maximum of 20 percent of the conditioned floor area in all climate zones, however there are exceptions to the prescriptive requirements for alterations in §150.2(b)1A which allow additional glass area beyond the 20 percent limitation, including west-facing glass.

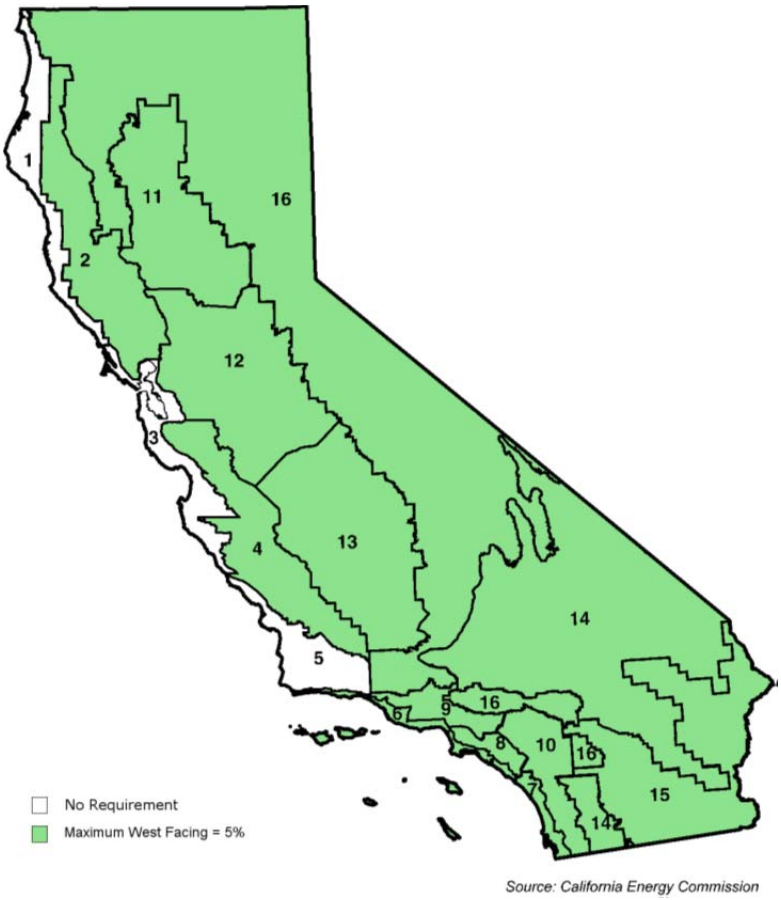

Figure 3-5 – Package A, Prescriptive West-Facing Window Area Limits by Climate Zone

Shading

While a low emissivity (low-e) coating on the glass is one of the most common ways to reduce solar gain in combination with insulated window frame, there are other options to help increase shading:

- Use of permanent installed exterior shade screens
- Louvers on the outside of the window are typically used on windows facing south. See Table 3-4 for different types of Exterior Shades and Solar Heat Gain Coefficients
- Properly sized overhang - See **Fixed Permanent Shading Devices** discussed later in this chapter below.

Dynamic Glazing:

Dynamic Glazing products are either Integrated Shading Systems or Electro-Chromatic type devices and are considered a fenestration product. Integrated shading systems include blinds positioned between glass panes that can be opened and closed manually or using automatic controls. The labels for internal shading systems will reflect the endpoints of the product's performance for U-factor and SHGC. See Figure 3-6.

Figure 3-6 – Example of Dynamic Glazing Type - Integrated Shading System

Source: NFRC Dynamic Glazing Products Fact Sheet

Its unique rating "Variable Arrow" identifier help consumers/specifiers understand the "dynamics" of the product and allow comparison with other similar dynamic fenestration products. The following label references are;

- The Variable Arrow – If the fenestration product can operate at intermediate states, a dual directional arrow, (↔), with the word "Variable" will appear on the label. Some dynamic glazings are able to adjust to intermediate states allowing for a performance level between the endpoints. The low value rating is displayed to the left (in the Closed or darker position) and the high value rating is displayed to the right (in the Open or lighter position). This lets the consumer know at a glance the best and worst case performance of the product and what the default or de-energized performance level.

Figure 3-7 – Dynamic Glazing NFRC Label Stickers

Source: NFRC Dynamic Glazing Products Fact Sheet

Chromatic Glazing

One type of dynamic glazing product uses a Chromatic type of glass that has the ability to change its performance properties, allowing the occupant to control manually or automatically their environment by tinting or darkening a window with the flip of a switch. Some windows and doors can change their performance automatically in response to a control or environmental signals. These high-performance windows provide a variety of benefits; including reduced energy costs due to controlled daylighting and unwanted heat gain or heat loss. While still a relatively new technology, they are expected to grow substantially in the coming years. A view of Chromatic glazing in the open (off) and closed (on) position is shown in Figure 3-8 below.

Figure 3-8 – Chromatic *Glazing*
Source: Sage Electrochromics

DYANMIC GLAZING COMPLIANCE

Integral Shading Device

To use the high performance values the following must be met:

- Must have a an NFRC Certified Label sticker; or
- When no NFRC is available then the default values from Table 110.6-A and 110.6-B must be used.

Chromogenic Glazing

- Must have a an NFRC Certified Label sticker; and
- Automatic controls must be installed to receive best rated performance value.
- If no NFRC label but with automatic controls then default to Table 150.1-A maximum U-factor of 0.32 and Maximum SHGC of 0.25; or
- If with an NFRC label, but no automatic controls then default to Table 150.1-A maximum U-factor of 0.32 and Maximum SHGC of 0.25; or
- If no NFRC and no automatic controls then the default values from Table 110.6-A and 110.6-B must be used.

Window Films

Window films are Polyester film that offer crystal clarity and can be pre-treated to accept different types of coatings. There are three basic categories of window films:

1. Clear (Non-Reflective);
2. Tinted or Dyed (Non-Reflective); and
3. Metalized (Reflective), which can be metalized through vacuum coating, sputtering, or reactive deposition or reactive deposition and may be clear or colored.

- Clear films are used as safety or security films and to reduce ultraviolet (UV) light which contributes greatly to fading; however, they are not normally used for solar control or energy savings.
- Tinted or dyed films reduce both heat and light transmission, mostly through increased absorptance, and can be used in applications where the primary benefit desired is glare control with energy savings secondary.
- Metalized (reflective) films are the preferred film in most energy savings applications, since they reduce transmission primarily through reflectance, and are manufactured to selectively reflect heat more than visible light through various combinations of metals.

See Figure 3-9 below. NFRC Attachment Ratings Label which helps to identify the energy performance of Window Films.

NFRC ATTACHMENT RATINGS

XYZ Applied Film Company • Deluxe Green Film

CPD#000-X-1 (Interior)

This rating uses reference product energy performance - actual product performance may vary.

ENERGY PERFORMANCE RATINGS

Reference Product		U-Factor		Solar Heat Gain Coefficient		Visible Transmittance	
Type	Glazing	W/O Film	With Film	W/O Film	With Film	W/O Film	With Film
Residential	Single Glazed Clear	1.09	1.01	0.71	0.40	0.74	0.57
	Double Glazed Clear	0.66	0.67	0.63	0.44	0.67	0.52
Non-Residential	Single Glazed Clear	1.02	0.93	0.72	0.43	0.78	0.60
	Single Glazed Gray	1.02	0.93	0.51	0.35	0.39	0.31
	Double Glazed Clear	0.60	0.53	0.62	0.47	0.69	0.54
	Double Glazed Gray	0.60	0.53	0.41	0.32	0.35	0.27

Manufacturer stipulates that these ratings conform to applicable NFRC procedures for determining whole product performance. NFRC ratings are determined for a fixed set of environmental conditions and a specific product size. NFRC does not recommend any product and does not warrant the suitability of any product for any specific use. Consult manufacturer's literature for other product performance information.

www.nfrc.org

Figure 3-9 – Window Film Energy Performance Label

Performance Window Film Compliance

To receive window film credit the following must be met:

- The Performance Approach must be used to meet energy compliance;
- NFRC Window Film Energy Performance Label is required for each different film applied; otherwise use the default TABLE 110.6-A and 110.6-B values must be used;
- Windows films must have at least a 10 year warranty

Glazed Doors

§110.6

The following rules apply to doors with glass:

Any door that is more than one-half glass is considered a glazed door and must comply with the mandatory other requirements applicable to a fenestration product. Up to 3 ft^2 of glass in a door is exempt from the U-factor and SHGC requirements (or can be considered equivalent to the Package A values). The U-factor and SHGC shall be based on either the NFRC values for the entire door including glass area, or use default values in Table 110.6-A for the U-factor and Table 110.6-B for the SGHC. If the door is made up of less than 50 percent, the opaque part of the door is ignored in the prescriptive approach, but in the performance method it is assumed a default U-factor of 0.50. The glass area of the door is calculated as the sum of all glass surfaces plus 2 inches on all sides of the glass to account for a frame.

3.5.5 Compliance Alternatives

While the prescriptive requirements and mandatory measures establish a minimum level of performance, the opportunities to exceed the requirements of the standards are considerable. Some of these compliance options are discussed in this section while others are included in the Performance Compliance section (Chapter 8). Options that are recognized for credit through the performance method are called compliance options. Most require using the performance approach, but a few exterior shading devices and south facing overhangs may be used to comply with the prescriptive requirements.

A. Fenestration Area

Beginning with the 2005 update to the Standards, no credit is offered through the performance approach for reducing fenestration area below the maximum allowed 20 percent of the conditioned floor area (CFA).

Data show that the average window area in single family homes is about 17.3 percent of the CFA. In multifamily buildings, the average window area is about 14.5 percent of the conditioned floor area. While these are averages, the variations are considerable as shown in Figure 3-10.

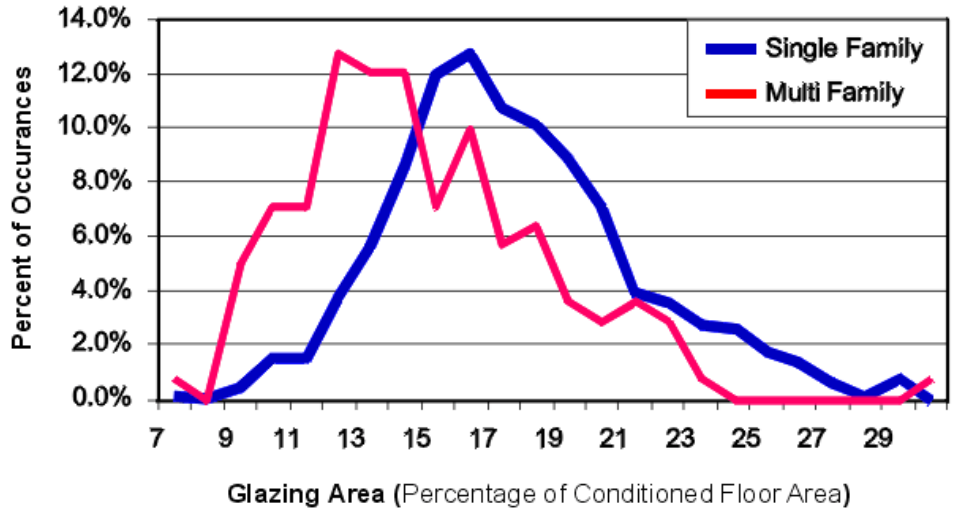

(Source: Residential New Construction Database)

Figure 3-10 – Glass Area in Single Family and Multifamily Residence

The Energy Commission made fenestration area less than or equal to 20 percent a neutral variable in the performance approach with the 2005 update and there is no change in this regard in the 2013 update. The Commission recognizes that area and orientation can have a big impact on energy use, but because these are so variable in buildings, the Commission does not want the energy efficiency of other building components to be eroded in buildings that have small fenestration areas. While there is no credit for fenestration area less than 20 percent of CFA, there is a penalty for buildings that have a window area that exceeds 20 percent of CFA. Such buildings are permitted only with the performance approach, where the standard design has a fenestration area equal to the proposed design, up to 20 percent of the conditioned floor area, and the glass area in the standard design is uniformly distributed among cardinal orientations. The proposed design has the exact proposed glass area and orientation.

Orientation

Window and skylight orientation has a huge impact on both energy use and peak electric demand. Orientation is a compliance option that is recognized in the performance approach, since the standard design has windows uniformly distributed on the north, south, east, and west sides of the building.

Improved Fenestration Performance

With the 2013 update, the weighted average U-factor has been reduced to 0.32 in all climate zones as indicated in Package A. This means there is less credit available for installing high performance fenestration that could be traded off or be used to avoid other measures, such as duct sealing and verification. However, choosing high performance fenestration which performs better than the prescriptive requirements can still earn some credit through the performance method. In air conditioning climates, choosing a window with an SHGC lower than 0.25 will reduce the cooling loads compared to the standard design.

The magnitude of the impact will vary by climate zone; in mild coastal climates the benefit from reducing fenestration U-factor will be smaller than in cold mountain climates. Several factors affect window performance. For fenestration with NFRC ratings, the following performance features are accounted for in the U-factor and SHGC ratings:

- Frame materials, design, and configuration (including cross-sectional characteristics). Fenestration is usually framed in wood, aluminum, vinyl, or composites of these. Frame materials such as wood and vinyl are better insulators than metal. Some aluminum-framed units have thermal breaks that reduce the conductive heat transfer through the framing element as compared with similar units that have no such conductive thermal barriers.
- Number of panes of glazing, coatings, and fill gases. Double-glazing, dynamic glazing with controls offers opportunities for improving performance beyond the dimension of the air space between panes. For example, special materials that reduce emissivity of the surfaces facing the air space, including low-e or other coatings and chromogenic glazing, improve the thermal performance of fenestration products. Fill gases other than dry air such as, carbon dioxide, argon, or krypton and chromogenic glazing – also improve thermal performance.

Fixed permanent Shading Devices

Shading of windows is also an important compliance option. Overhangs or sidefins that are attached to the building or shading from the building itself are compliance options for which credit is offered through the performance approach. However, no credit is offered for shading from trees, adjacent buildings, or terrain.

Windows that face south can be effectively shaded by overhangs positioned above the window. The ideal overhang is one that provides shade during the months when the building is likely to be in an air conditioning mode and allows direct solar gains in the heating months. This can be achieved because during the summer the sun is high as it passes over the south side, while in the winter it is low enabling solar radiation to pass beneath the overhang. Due to the potential effectiveness of south-facing overhangs, a prescriptive compliance option is offered. See the following section for details.

Shading is much more difficult on the east and west sides of the house (see Figure 3-11). When the sun strikes these façades it is fairly low in the sky, making overhangs ineffective. Vertical fins can be effective, but they degrade the quality of the view from the window and limit the natural light that can enter. In cooling climates, the best approach is to minimize windows that face east and west. Landscaping features can be considered to increase comfort but cannot be used for compliance credit.

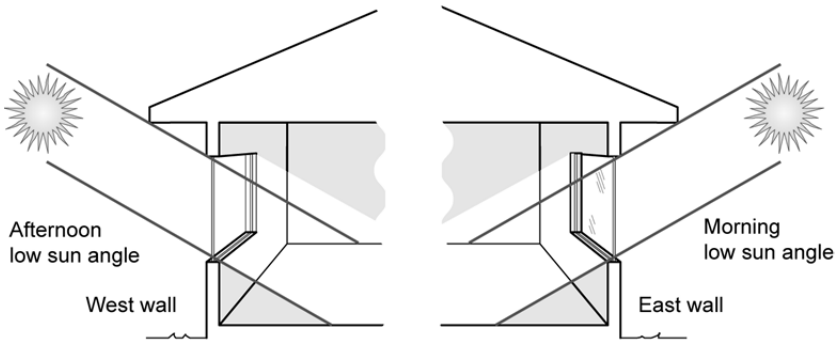

Figure 3-11 – Difficulty of Shading East- and West-Facing Windows

Prescriptive Compliance Using South-Facing Overhangs

A south-facing overhang may be used to meet the prescriptive SHGC criteria in the cooling climates. To qualify, the south overhang must be sized to completely shade the window at solar noon on August 21 and to allow the window to be substantially exposed to solar gains at solar noon on December 21. The minimum and maximum overhang depths that meet these criteria are illustrated in Figure 3-12. Note it is important that windows that do not face directly south will require larger overhangs for complete shading in the West and East.

Credit is also offered for south facing overhangs with the performance method, but in this case the specific dimensions of the overhang are entered into a qualifying computer program and the benefit of the overhang is calculated for each hour of the day or sun angle. With the performance method, credit is not limited to south facing overhangs, although they are still most effective on this orientation.

When a south facing overhang is used for compliance, it must be shown on the plans.

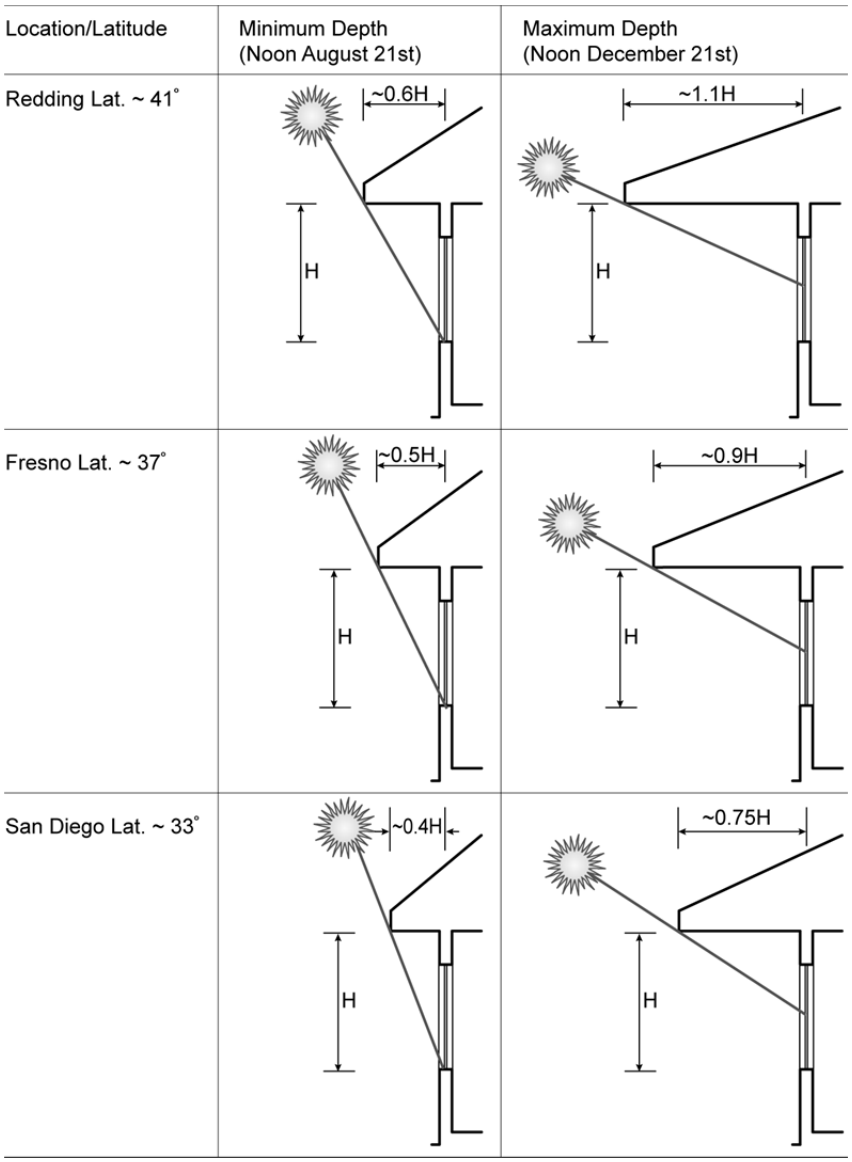

Figure 3-12 – South-Facing Overhang Dimensions for Prescriptive Compliance

Exterior Shading Devices

The prescriptive Standards require fenestration products with an SHGC of 0.25 or lower in climate zones 2, 4 and 6 through 16. However, a fenestration product with an SHGC greater than 0.25 may be used with the prescriptive requirements if a qualifying exterior shading device is used. Exterior shading devices and their SHGC values are shown in Table 3-4. These include woven sunscreens as well as perforated metal sunscreens. As shown in the table, these devices transmit between 13 percent and 30 percent of the sun that strikes them.

When exterior overhangs are used, the SHGC requirements of prescriptive Package- A may be met if the calculated combination of the overhang and fenestration SHGC efficiency is equal or lower than 0.25. However, when installing a fenestration product of SHGC of 0.25 or lower plus and an overhang together will automatically comply with all climate zones without calculations.

For compliance credit, exterior shading devices must be permanently attached as opposed to clips, hooks, latches, snaps, or ties. Exterior shading devices on windows or skylights that are prohibited by life-safety codes from being permanently attached for emergency egress reasons are exempt from this requirement. Compliance with WS-03R form is to calculate the combined SHGC of windows and exterior shading devices. When exterior shades are required for compliance, they must also be listed on the CF1R form and documented on the plans.

The SHGC of the window in combination with an exterior device is given by the following:

Equation 3-1:

$$SHGC_{combined} = (0.2875 \times SHGC_{max} + 0.75) \times SHGC_{min}$$

All operable windows and skylights are assumed to have an insect screen and this is the default condition against which other window/exterior shading device combinations are compared. The standard case is a window with an SHGC of 0.25 and an insect screen with an SHGC of 0.76. For this default case, the SHGC of the window is the $SHGC_{min}$, and the SHGC of the exterior sunscreen is $SHGC_{max}$. Working through the math on the WS-03R form, $SHGC_{combined}$ is 0.25. This means that any combination of window SHGC and exterior SHGC that results in a $SHGC_{combined}$ of 0.25 or less complies with the prescriptive requirements.

Most of the shading devices (other than the default insect screen) have an SHGC of 0.30 or lower. Combining this with the SHGC of any window may result in a combined SHGC which is equal or lower than the prescriptive criterion of 0.25. This method of combining the SHGC of the window with the SHGC of the exterior shading device is also used with the whole building performance approach.

Compliance WS-03R form is used to calculate the combined SHGC of windows and exterior sunscreen type shading devices. When exterior shades are required for compliance, they must be listed on the CF1R form and be documented on the plans.

Table 3-4 – Exterior Shades and Solar Heat Gain Coefficients

Exterior Shading Device	**SHGC***
Standard Bug (insect) Screen (default for windows)	0.76
Exterior Sunscreens with Weave 53 x 16/inch	0.30
Louvered Sunscreens w/Louvers as wide as Window Openings	0.27
Low Sun Angle Louvered Sunscreen	0.13
Vertical Roller Shades or retractable/Drop Arm/ Combination/Marquisolette and Operable Awnings	0.13
Roll Down Blinds or Slats	0.13
None (for skylights only)	1.00
* Reference glass values assume single pane clear glass and metal framing 1/8th inch double strength (DSS) glass. Use WS-3R Worksheet for calculation.	

[1] The equation can be found in the 2013 Residential Compliance Manual and it is included in WS-3R in Appendix A.

Interior Shading

There is no credit for interior aftermarket shading devices, although they can be effective in reducing solar gains and should be considered by homeowners. The Energy Commission considers these added interior shades in the category of home furnishings and not a feature of the house that is provided by the builder or fenestration manufacturer. Draperies, interior blinds, interior shades, and other interior devices are not credited toward energy compliance; however, a default standard shade is still considered in performance calculations so that estimates of energy use are more realistic, and tradeoffs against other measures are more equitable.

Bay Windows

Bay windows are a special compliance case. Bay windows may either have a unit NFRC rating (i.e., the rating covers both the window and all opaque areas of the bay window), an NFRC rating for the window only, or no NRFC rating. Non-rated bay windows may or may not have factory-installed insulation.

For bay windows that come with an NFRC rating for the entire unit, compliance is determined based on the rough opening area of the entire unit, applying the NFRC U-factor and SHGC. If the unit U-factor and SHGC do not meet the package requirements or area-weighted average, the project must show compliance using the performance approach.

Bay windows with no rating for the entire unit (where there are multiple windows that make up the bay) and with factory-installed or field-installed insulation must comply accounting for the performance characteristics of each component separately. Opaque portions of bay windows including roofs and floors must be insulated to meet the wall insulation requirements of Package A for prescriptive compliance. The opaque portion must either meet the minimum insulation requirements of Package A for the applicable climate zone or be included in a weighted average U-factor calculation of an overall opaque assembly that does meet the Package A requirements. For the windows, the U-factor and SHGC values may be determined either from an NFRC rating or by using default values in §110.6-A and §110.6-B. If the window U-factor and SHGC meet the package requirements, the bay window complies prescriptively (if overall building fenestration area meets prescriptive compliance requirements). If the bay window does not meet package requirements, the project must show compliance under the performance approach.

Natural Ventilation through Fenestration

Operable windows can be a source of ventilation air useful for improving indoor air quality by dilution of indoor air contaminants and moisture and “free” cooling. During periods when the outdoor temperature is lower than the desired indoor temperature and the indoor temperature is uncomfortably warm from solar gains through windows or from heat generated inside the house, windows may be opened for some or all of the cooling. Natural ventilation can reduce the need to run the air conditioner. Not only does natural ventilation save energy, but it can also provide better air quality inside the home.

When building envelopes are sealed to reduce infiltration, air exchange with the outside air is reduced which increases the need for a mechanical means of bringing in outside air.

Energy Commission sponsored research in California homes has shown that a significant number of home occupants do not regularly open their windows for

ventilation. When building envelopes are sealed to reduce infiltration, air exchange with the outside air is reduced which increases the need for a mechanical means of bringing in outside air.

Starting with the 2008 update, it is mandatory to meet the requirements of ASHRAE Standard 62.2 which include mechanical ventilation and minimum openable window area requirements. This mandatory measure is discussed in greater detail in Section 3.6.1.

Construction Practice/Compliance and Enforcement

The compliance and enforcement process, should ensure that the fenestration efficiency values, areas, orientation, etc. be indicated on the CF1R form and are also specified on the building plans. In addition, the same efficiency values of the actual installed fenestration products meet or exceed the efficiency values on the CF1R form. For more information, see Compliance and Enforcement on fenestration in chapter 2 of this manual.

3.6 Envelope Features

This section of the building envelope chapter addresses the requirements for the building shell, excluding fenestration. Components of the building shell include walls, floors, and roofs and/or ceilings. Fenestration, and windows and doors are addressed in Section 3.5 Fenestration.

3.6.1 Mandatory Requirements

Joints and Other Openings

§110.7

Air leakage through joints, penetrations, cracks, holes and openings around windows, doors, walls, roofs and floors can result in higher energy use for home heating and cooling than necessary. The following openings in the building envelope shall be caulked, gasketed, weatherstripped or otherwise sealed:

1. Exterior joints around window and door frames, including doors between the house and garage, between interior HVAC closets and conditioned space, between attic access and conditioned space, between wall sole plates and the floor, exterior panels and all siding materials;
2. Openings for plumbing, electricity, and gas lines in exterior walls, ceilings and floors;
3. Openings in the attic floor (such as where ceiling panels meet interior and exterior walls and masonry fireplaces);
4. Openings around exhaust ducts such as those for clothes dryers;
5. Weatherstripping is required for all field-fabricated operable windows and doors (other windows and doors must meet infiltration requirements and be laboratory tested). This includes doors between the garage and the house, between interior HVAC closets and conditioned space, and between the attic access and conditioned space (§110.6(b)); and

6. All other such openings in the building envelope.

Alternative techniques may be used to meet the mandatory caulking and sealing requirements for exterior walls. These include, but are not limited to:

- Stucco
- Caulking and taping all joints between wall components (e.g., between slats in wood slat walls
- Building wraps
- Rigid wall insulation installed continuously on the exterior of the building

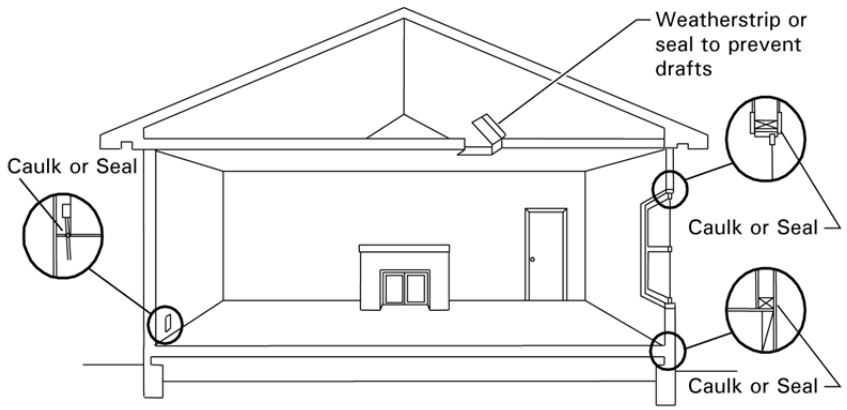

Figure 3-13 – Caulking and Weatherstripping

A. **Construction Practice/Compliance and Enforcement**

B. The compliance and enforcement process should ensure that all potential sources of infiltration and exfiltration in the building envelope, joints and openings are caulked, gasketed, or otherwise sealed. For more information on Compliance and Enforcement on joints and openings, see Chapter 2.

A. Certification of Insulation Materials

§110.8(a)

Manufacturers must first certify that insulating materials comply with *California Quality Standards for Insulating Materials* (CCR, Title 24, Part 12, Chapters 12-13), which ensure that insulation sold or installed in the state performs according to stated R-values and meets minimum quality, health, and safety standards. Builders and enforcement agencies shall use the Department of Consumer Affairs *Directory of Certified Insulation Material* to verify the certification of the insulating material. If an insulating product is not listed in the most recent edition of the directory, contact the Department of Consumer Affairs, Bureau of Home Furnishing and Thermal Insulation Program, at (916) 999-2041 or by E-mail: HomeProducts@dca.ca.gov.

B. Urea Formaldehyde Foam Insulation

§110.8(b)

The mandatory measures restrict the use of urea formaldehyde foam insulation. The restrictions are intended to limit human exposure to formaldehyde, which is a volatile organic chemical known to be harmful to humans.

If foam insulation is used that has urea formaldehyde, it must be installed on the exterior side of the wall (not in the cavity of framed walls), and a continuous vapor retarder must be placed in the wall construction to isolate the insulation from the interior of the space. The vapor retarder must be 4-mil (0.1 mm) thick polyethylene or equivalent.

C. Flame Spread Rating of Insulation

§110.8(c)

The *California Quality Standards for Insulating Materials* requires that exposed facings on insulation material be fire resistant and be tested and certified not to exceed a flame spread of 25 and a smoke development rating of 450. Insulation facings must be in contact with the finished assembly surface or they are considered exposed applications and cannot be installed.

Flame spread ratings and smoke density ratings are shown on the insulation or packaging material or may be obtained from the manufacturer.

D. Insulation Placement on Roof/Ceilings

§110.8(e)

Insulation installed on the top of suspended (T-bar) ceilings with removable ceiling panels may not be used to comply with the Standards unless the installation meets the criteria described in the *Exception* to §110.8(e)3 below. Insulation may be installed in this location for other purposes such as for sound control, but it will have no value in terms of meeting roof/ceiling insulation requirements of the Standards.

Acceptable insulation installations include placing the insulation in direct contact with a continuous roof or ceiling that is sealed to limit infiltration and exfiltration as specified in §110.7; including but not limited to placing insulation either above or below the roof deck or on top of a drywall ceiling.

E. Insulation Requirements for Heated Slab Floors

§110.8(g)

Heated slab-on-grade floors must be insulated according to the requirements in Table 110.8-A of the standards. The top of the insulation must be protected with a rigid plate to prevent intrusion of insects into the building foundation.

A common location for the slab insulation is on the perimeter of the foundation. Insulation that extends downward to the top of the footing is acceptable. Otherwise, the insulation must extend downward from the level of the top of the slab, down 16 inches (40 cm) or to the frost line, whichever is greater.

For below-grade slabs, vertical insulation shall be extended from the top of the foundation wall to the bottom of the foundation (or the top of the footing) or to the frost line, whichever is greater.

Another option is to install the insulation between the heated slab and foundation wall. In this case insulation must extend downwards to the top of the footing and then extend horizontally inwards a distance of 4 ft towards the center of the slab. R-5 vertical insulation is required in all

climates except climate zone 16, which requires R-10 of vertical insulation and R-7 horizontal insulation.

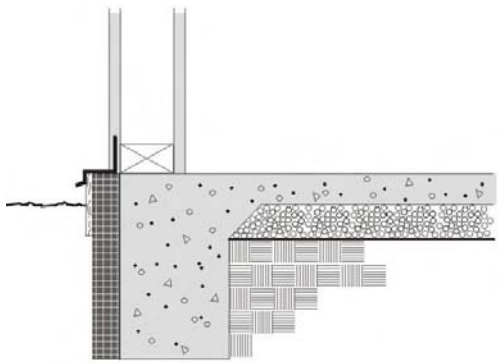

Figure 3-14 – Perimeter slab insulation

Table 3-5 – Slab Insulation Requirements for Heated Slab Floors

Insulation Location	Insulation Orientation	Installation Requirements	Climate Zone	Insulation R-Value
Outside edge of heated slab, either inside or outside the foundation wall	Vertical	From the level of the top of the slab, down 16 inches or to the frost line, whichever is greater. Insulation may stop at the top of the footing where this is less than the required depth. For below grade slabs, vertical insulation shall be extended from the top of the foundation wall to the bottom of the foundation (or the top of the footing) or to the frost line, whichever is greater.	1 – 15	5
			16	10
Between heated slab and outside foundation wall	Vertical and Horizontal	Vertical insulation from top of slab at inside edge of outside wall down to the top of the horizontal insulation. Horizontal insulation from the outside edge of the vertical insulation extending 4 feet toward the center of the slab in a direction normal to the outside of the building in plan view.	1 – 15	5
			16	10 vertical and 7 horizontal

F. Wet Insulation Systems

§110.8(h)

Wet insulation systems are roofing systems where the insulation is installed above the roof's waterproof membrane. Water can penetrate this insulation material and have an effect on the energy performance of the roofing assembly in wet and cool climates. In climate zones 1 and 16, the insulating R-value of continuous insulation materials installed above the roof's waterproof membrane must be multiplied by 0.8 before choosing the table column in Reference Joint Appendix JA4 for determining assembly

U-factor. See the footnotes for Tables 4.2.1 through 4.2.7 in the Reference Joint Appendix JA4.

G. Roofing Products Solar Reflectance & Thermal Emittance

§110.8(i)

Roofing products shall be tested and labeled by the Cool Roof Rating Council (CRRC) for both solar reflectance and thermal emittance. The CRRC certification includes solar reflectance and thermal emittance. There are two kinds of solar reflectance:

Initial solar reflectance

3-year aged solar reflectance

All requirements of the Standards are based on the 3-year aged reflectance. However, if the aged value for the reflectance is not available in the CRRC's Rated Product Directory, then the aged value shall be derived from the CRRC initial value. The equation below can be used to calculated the aged rated solar reflectance until the appropriate aged rated value for the reflectance is posted in the directory.

Equation 3-2:

$$\text{Aged Reflectance}_{calculated}=(0.2+\beta[\rho_{initial}-0.2])$$

Where,

$\rho_{initial}$ = Initial Reflectance listed in the CRRC Rated Product Directory

β = soiling resistance which is listed in Table 3-6

Table 3-6 – Values Of Soiling Resistance β By Product Type

PRODUCT TYPE	β
Field-applied coating	0.65
Other	0.70

The Standards do not distinguish between initial and aged thermal emittance, meaning that either value can be used to demonstrate compliance with the Standards. If a manufacturer fails to obtain CRRC certificate for their roofing products, the following default aged solar reflectance and thermal emittance values must be used for compliance:

For asphalt shingles, 0.08/0.75

For all other roofing products, 0.10/0.75

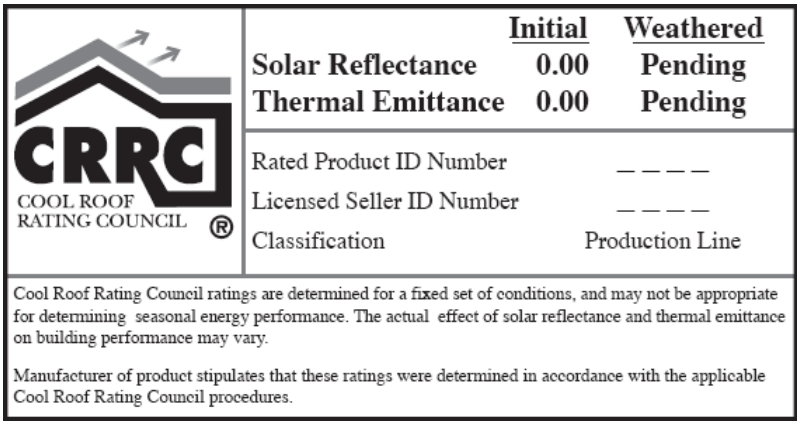

	Initial	Weathered
Solar Reflectance	0.00	Pending
Thermal Emittance	0.00	Pending

Rated Product ID Number	_ _ _ _
Licensed Seller ID Number	_ _ _ _
Classification	Production Line

Cool Roof Rating Council ratings are determined for a fixed set of conditions, and may not be appropriate for determining seasonal energy performance. The actual effect of solar reflectance and thermal emittance on building performance may vary.

Manufacturer of product stipulates that these ratings were determined in accordance with the applicable Cool Roof Rating Council procedures.

Figure 3-15 – Sample CRRC Product label and information

C. *Field Applied Liquid Coatings*

There are a number of liquid products, including elastomeric coatings and white acrylic coatings that qualify for Field Applied Liquid Coatings. The Standards specify minimum performance and durability requirements for field-applied liquid coatings. Please note that these requirements do not apply to industrial coatings that are factory-applied, such as metal roof panels. The requirements address elongation, tensile strength, permeance, and accelerated weathering. The requirements depend on the type of coating and are described in greater detail below. Liquid roof coatings applied to low-sloped roofs in the field as the top surface of a roof covering shall comply with the following mandatory requirements and descriptions.

Aluminum-Pigmented Asphalt Roof Coatings

Aluminum-pigmented coatings are silver-colored coatings that are commonly applied to modified bitumen and other roofing products. The coating has aluminum pigments that float to the top surface of the coating while it is setting, providing a shiny and reflective surface. Because of the shiny surface and the physical properties of aluminum, these coatings have a thermal emittance below 0.75, which is the minimum rating for prescriptive compliance.

This class of field-applied liquid coatings shall be applied across the entire surface of the roof and meet the dry mil thickness or coverage recommended by the coating manufacturer, taking into consideration the substrate on which the coating will be applied to. Also, the aluminum-pigmented asphalt roof coatings shall be manufactured in accordance with ASTM D2824[2]. Standard Specification is also required for Aluminum-Pigmented Asphalt Roof Coatings, Nonfibered, Asbestos Fibered, and Fibered without Asbestos that are suitable for application to roofing or masonry surfaces by brush or spray. Use ASTM D6848, Standard Specification for Aluminum Pigmented Emulsified Asphalt used as a Protective Coating for

[2] A. This specification covers asphalt-based, aluminum roof coatings suitable for application to roofing or masonry surfaces by brush or spray.

B. The values stated in SI units are to be regarded as the standard. The values in parentheses are for information only.

C. The following precautionary caveat pertains only to the test method portion, Section 8, of this specification: This standard does not purport to address all of the safety concerns, if any, associated with its use. It is the responsibility of the user of this standard to establish appropriate safety and health practices and determine the applicability of regulatory limitations prior to use.

Roofing; installed in accordance with ASTM D3805, Standard Guide for Application of Aluminum-Pigmented Asphalt Roof Coatings.

Cement-Based Roof Coatings

This class of coatings consists of a layer of cement and has been used for a number of years in the central valley of California and in other regions. These coatings may be applied to almost any type of roofing product.

Cement-based coatings shall be applied across the entire roof surface to meet the dry mil thickness or coverage recommended by the manufacturer. Also, cement-based coatings shall be manufactured to contain no less than 20% Portland Cement and meet the requirements of ASTM D822, ASTM C1583 and ASTM D5870.

Other Field-Applied Liquid Coatings

Other field-applied liquid coatings include elastomeric and acrylic-based coatings. These coatings must be applied across the entire surface of the roof surface to meet the dry mil thickness or coverage recommended by the coating manufacturer, taking into consideration the substrate on which the coating will be applied. The field-applied liquid coatings must be tested to meet a number of performance and durability requirements as specified in Table 110.8-C of the Standards or the minimum performance requirements of ASTM C836, D3468, D6083, or D6694, whichever are appropriate to the coating material.

H. Radiant Barriers

§110.8(j)

The radiant barrier is a reflective material that reduces radiant heat transfer caused by solar heat gain in the roof. Radiant barriers are installed below the roof deck in the attic and reduce radiant heat to air distribution ducts and insulation located below the radiant barrier.To qualify, a radiant barrier must have an emittance of 0.05 or less. The product must be tested according to ASTM C-1371-98 or ASTM E408-71(2002) and must be certified by the California Bureau of Electronic and Appliance Repair, Home Furnishings and Thermal Insulation and listed in their Consumer Guide and Directory of Certified Insulation material, at http://www.bhfti.ca.gov/industry/tinsulation.shtml.

I. *Ceiling and Rafter Roof Insulation*

§110.8(d), §110.8(e), §150.0(a), §150.0(b) These sections are also shown in Appendix B of this document.

Wood framed roof/ceiling construction assemblies must have at least R-30 insulation or a maximum U-factor of 0.031 based on 24 inch on center wood framed rafter roofs, as determined from the Reference Joint Appendix JA4. Some areas of the roof/ceiling can be less than the mandatory minimum U-factor as long as other areas exceed the requirement and the weighted average U-factor for the overall ceiling/roof is 0.031 or less.

Metal-framed and roof/ceiling constructions other than wood framed must have a U-factor of 0.031 or less in order to comply with the mandatory measures. If the insulation is not penetrated by framing, such as rigid insulation laid over a structural deck, then the rigid insulation can actually have a rated R-value of less than R-30 so long as the total roof/ceiling assembly U-factor is not greater than U-0.031.

J. Loose Fill Insulation

§150.0(b) Loose Fill Insulation

Loose fill insulation must be blown in evenly, and insulation levels must be documented on the Certificate of Installation (CF2R). The insulation level can be verified by checking that the depth of insulation conforms to the manufacturer's coverage chart for achieving the required R-value. The insulation must also meet the manufacturer's specified minimum weight per ft² for the corresponding R-value. When installing loose fill insulation, the following guidelines should be followed:

For wood trusses that provide a flat ceiling and a sloped roof, the slope of the roof should be at about 4:12 or greater in order to provide adequate access for installing the insulation. Insulation thickness near the edge of the attic will be reduced with all standard trusses, but this is acceptable as long as the average thickness is adequate to meet the minimum insulation requirement.

If the ceiling is sloped (for instance, with scissor trusses), loose fill insulation can be used as long as the slope of the ceiling is no more than 4:12. If the ceiling slope is greater than 4:12, loose fill should be used only if the insulation manufacturer will certify the installation for the slope of the ceiling.

At the apex of the truss, a clearance of at least 30 inch should be provided to facilitate installation and inspection.

K. Wall Insulation

§150.0(c) Wall Insulation

The mandatory measures have two requirements depending on frame size:

1. 2x4 inch wood-framed walls above grade shall have at least R-13 insulation installed in the cavities between framing members, or a U-factor that cannot exceed U-0.102. Insulation may be of greater insulating value in certain areas of the wall and of lesser insulating value in other areas of the wall provided that the area-weighted U- factor does not exceed 0.102 to show equivalence to an R-13 wall.

2. 2x6 inch or greater wood-framed walls above grade shall have at least R-19 insulation installed in the cavities between framing members or a U-factor not exceeding 0.074. Insulation may be of greater insulating value in certain areas of the wall and of lesser insulating value in other areas of the wall provided that the area-weighted U-factor does not exceed 0.074 to show equivalence to an R-19 wall.

1.

There are several cases where the mandatory measures for wall insulation do not apply or apply in a special way. These include the following:

1. The mandatory measures apply to framed foundation walls of heated basements or heated crawl spaces that are located above grade, but not to the portion that is located below grade.
2. For additions to existing buildings, existing wood-framed walls that are already insulated with R-11 insulation need not comply with the mandatory R-13 wall insulation.

3. Rim joists between floors of a multi-story building are deemed to comply with these mandatory measures if they have R-13 insulation installed on the inside of the rim joist and are properly installed between joist members.

For demising partitions and knee walls are not required to meet the prescriptive requirements of §150.1(c)1B. Demising partitions and knee walls are required to meet the mandatory minimum insulation requirement as set in §150.0(c)1 and 2. §150.0(c)1 requires that insulation not less than R-13 be installed between a 2x4 framing, or a U-factor which shall not exceed U-0.102. §150.0(c)2 requires insulation not less than R-19 be installed in framing of 2x6 inch or greater, or a U-factor equal to or less than 0.074.

2.

L. Raised-floor Insulation

§150.0(d)

Wood-framed floors must have at least R-19 insulation installed between framing members, or the construction must have a U-factor of 0.049 or less. The equivalent U-factor is based on R-19 insulation in a wood-framed floor. The R-19 insulation value and U-factor of U-0.049 are for the floor assembly alone and do not assume the effects of a crawlspace or buffer zone beneath the floor. If comparing to a crawlspace assembly, the equivalent U-factor is 0.037, which includes the effect of the crawlspace.

Other types of raised floors, except for concrete raised floors (concrete raised floors do not have a mandatory requirement, but do have a prescriptive requirement) **need to meet, must also meet the maximum U-factor. In all cases, some areas of the floor can have a U-factor less than the requirement as long as other areas have a U-factor that exceeds the requirement and the area-weighted average U-factor is less than described above.

Raised slab floors with radiant heat (heated slab floors) must meet special insulation requirements that are described in Chapter 4 of this manual.

When a controlled ventilated crawlspace or an unvented crawlspace is used, raised-floor insulation is not required.

M. Fireplaces, Decorative Gas Appliances and Gas Logs

§150.0(e)

The Standards have mandatory requirements to limit infiltration associated with fireplaces, decorative gas appliances, and gas logs. Fireplace efficiency can be greatly improved through proper air control, and reduced infiltration is also a benefit when the fireplace is not operating (the majority of the time for most houses).

Installation of factory-built or masonry fireplaces (see Figure 3-16) must include the following:

1. Closable metal or glass doors covering the entire opening of the firebox,
2. Doors covering the entire opening of the firebox that can be closed when the fire is burning,
3. A combustion air intake that is at least 6 square inches to draw air from outdoors and equipped with a readily accessible, operable and tight-fitting damper or combustion air control device (*Exception*: An outside combustion air intake is not

required if the fireplace is installed over a concrete slab and the fireplace is not located on an exterior wall),

4. A flue damper with a readily accessible control. (*Exception:* When a gas log, log lighter or decorative gas appliance is installed in a fireplace, the flue damper shall be blocked open if required by the manufacturer's installation instructions or the California Mechanical Code).

Continuous burning pilot lights are prohibited for fireplaces as well as for decorative gas appliances and gas logs. In addition, indoor air may not be used for cooling a firebox jacket when that indoor air is vented to the outside of the building.

When a gas log, log lighter or decorative gas appliance is installed in a fireplace, the flue damper must be blocked open if required by the manufacturer's installation instructions or the California Mechanical Code.

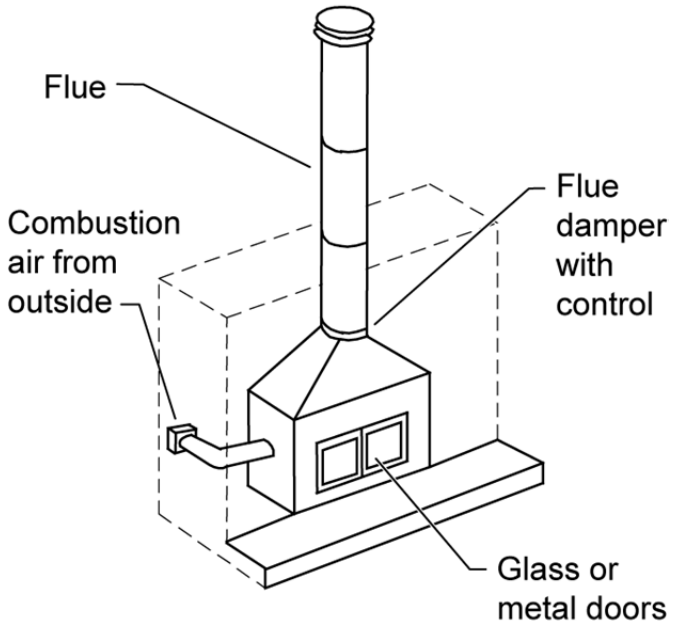

Figure 3-16 – Fireplace Installation

Example 3-14

Question

Are closable glass or metal doors required for decorative gas appliances?

Answer

Yes. Decorative gas appliances are required to have closable glass or metal doors covering the entire opening of the firebox.

Example 3-15

Question

If I want to have a gas log or some other device in the fireplace of my home, can I have a standing pilot light? Can I block open the damper?

Answer

The Standards disallow standing pilot light. The flue damper may be blocked open if required by either the manufacturer's installation instructions or the California Mechanical Code.

Example 3-16

Question

§150.0(e)2 states that no fireplace, decorative gas appliance or gas log can be installed if it has a continuously burning pilot light. The California Mechanical Code requires all gas appliances installed in California to have a manually operated shut-off valve, accessible to the inhabited space. Does this shut-off valve meet the intent of this section?

Answer

Not if the pilot light must be manually extinguished when the appliance is off. A unit that meets the intent of this section will have a pilot light that cannot stay on when the unit is off.

Example 3-17

Question

A building plan specifies a freestanding gas heater that is decorative; however, the equipment is vented and is rated as a room heater. Is it acceptable that this appliance have a pilot light?

Answer

Yes. Since this equipment is rated as a room heater, it can have a continuous burning pilot light.

Example 3-18

Question

Do decorative gas appliances need glass or metal doors?

Answer

Yes, the door requirement applies to masonry or factory-built fireplaces only. If a decorative gas appliance is installed inside a fireplace, the fireplace needs doors. Consult with the manufacturer of the decorative gas appliance regarding combustion air requirements.

N. Recessed Luminaires in Ceilings

§150.0(k)8

Luminaires recessed in insulated ceilings can create thermal bridging through the insulation. Not only does this degrade the performance of the ceiling assembly, but it can also permit condensation on a cold surface of the luminaire if exposed to moist air, as in a bathroom.

For these reasons, luminaires recessed in insulated ceilings must meet three requirements:

1. They must be listed as defined in the Article 100 of the California Electric Code for zero clearance insulation contact (IC) by Underwriters Laboratories or other testing/rating laboratories recognized by the International Conference of Building Officials. This enables insulation to be in direct contact with the luminaire.
2. The luminaire must have a label certified as per §150.0(k)8B for air tight (AT) construction. Air tight construction means that leakage through the luminaire will not exceed 2.0 cfm when exposed to a 75 Pa pressure difference, when tested in accordance with ASTM E283.
3. The luminaire must be sealed with a gasket or caulk between the housing and ceiling.

Refer to the Lighting chapter (Chapter 6) of this compliance manual for more information regarding the applicable requirements for recessed luminaires.

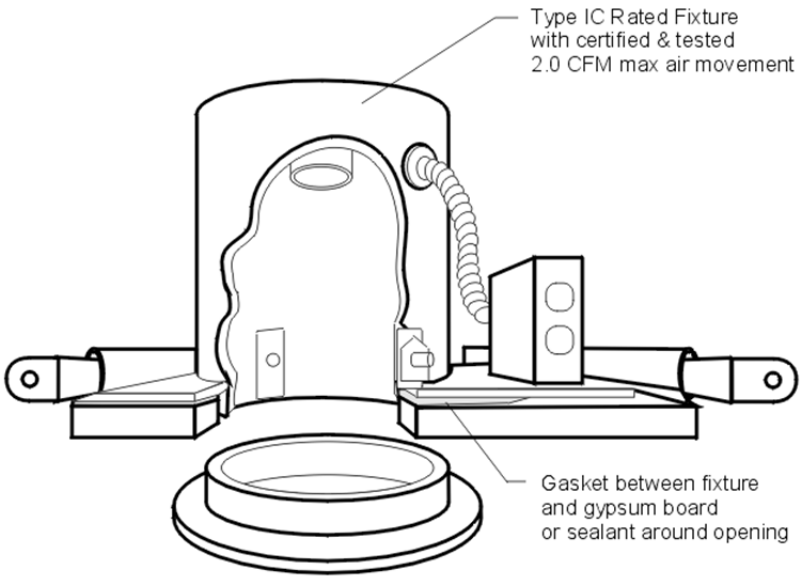

Figure 3-17 – IC-Rated Luminaire (Light Fixture)

O. Slab Insulation

§150.0(l) §118(g)

Mandatory measures require that the insulation material must be suitable for the application, with a water absorption rate no greater than 0.3 percent when tested in accordance with ASTM C272 Test Method A, 24-Hour-Immersion, and a vapor permeance no greater than 2.0 perm/inch when tested in accordance with ASTM E96. An example of an insulating material that meets these specifications is smooth-skin extruded polystyrene.

The insulation must also be protected from physical and UV degradation by either installing a water-resistant protection board, extending sheet metal flashing below grade, choosing an insulation product that has a hard durable surface on one side, or by other suitable means.

P. Ventilation for Indoor Air Quality

§150.0(o)

All buildings shall meet the requirements of ASHRAE Standard 62.2, Ventilation and Acceptable Indoor Air Quality in Low-Residential Buildings. The whole-building ventilation airflow shall be provided to meet the requirements of ASHRAE 62.2. Window operations are not a permissible method of providing whole house ventilation. Use of a continuously operating central fan integrated with a forced-air system air handler cannot be used to meet the whole-building ventilation airflow requirement.

Ventilation Openings

ASHRAE Standard 62.2 requires ventilation openings in habitable spaces, toilets and utility rooms. Spaces that meet the exhaust requirements are exempted from meeting the whole-building ventilation air flow requirement; there for an exhaust system can be substituted for a ventilation opening (see Section 4.6.6).

Field Verification and Diagnostic Testing

Field verification and diagnostic testing is required to confirm proper ventilation airflow following the procedures specified in the Residential Reference Appendices, Appendix RA3.7.

Example 3-19 – Ventilation Opening Louvers

Question

There are fixed wooden louvers over a window in a bedroom. The louvers have slats that are 1/8 inch thick, and they are spaced 1 inch apart. What is the reduction in square inches of openable area?

Answer

Assuming a window of 4 x 5 feet with 1 inch spacing between 1 inch louvers. Each louver has a space of 1 inch measured perpendicular to the slats (the correct way). The reduction is the slat thickness divided by the spacing, or 1/8 inch. The opening area is the original opening area ($2880in^2$) x ((1in – 1/8in)/1in) = $2520in^2$.

V. Vapor Retarder

§150.0(g) and Reference Residential Appendix RA4.5.2

Vapor retarder class is a measure of the ability of a material or assembly to limit the amount of moisture the passes through the material or assembly. Vapor retarder classes are defined in Section 202 of the CBC. Testing for vapor retarder class is defined using the desiccant method of ASTM E96.

- Class I: 0.1 perm or less
- Class II: 0.1 < perm ≤ 1.0 perm
- Class III: 1.0 < perm ≤ 10 perm

In climate zones 14 and 16, a continuous Class II vapor retarder, lapped or joint sealed, must be installed on the conditioned space side of all insulation in all exterior walls, on the floors of vented attics, and in unvented attics with air-permeable insulation.

Buildings with unvented crawl spaces in Climates zones 1-16 must have a Class I or Class II vapor retarder covering the earth floor to protect against moisture condensation.

If a building has a controlled ventilation crawl space a Class I or Class II vapor retarder must be placed over the earth floor of the crawl space to reduce moisture entry and protect insulation from condensation in accordance with Reference Residential Appendix RA4.5.2.

There are many product types having tested vapor retarder performance. Some common examples are:

- Foil and other facings on gypboard can provide moisture resistance and product literature should always be checked to ensure conformance to ASTM E96.
- The kraft paper used as facing on thermal batt insulation material is typically a Class II vapor retarder. Faced-batts may or may not have flanges for fastening to assembly framing. Fastening flanges may be face or inset stapled, or not stapled at all as the flanges provide no moisture control. Face stapling of flanged thermal batts helps ensure the insulation material is installed fully and properly within the framed cavity. Flangeless batts are also common and require no fastening as these materials maintain their installation integrity through friction-fitting within the cavity of framed assemblies. In all cases, the insulation must be installed properly.
- Many interior painted surfaces may also qualify for meeting the vapor retarder requirement if the paint product has been tested to show its compliance as a vapor retarder. The effectiveness of vapor retarder paint is dependent on the installed thickness, in mils. These products often require more than one layer to achieve their tested perm rating and care must be shown by the installer of the paint and for inspection by the building official.

For all types of vapor barriers, care should be taken to seal penetrations such as electric outlets on exterior walls.

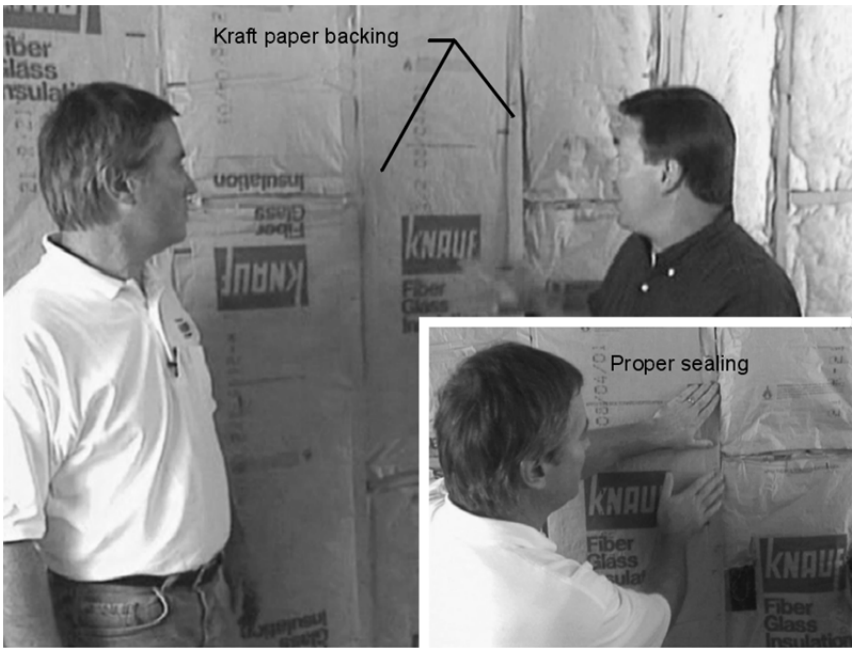

Source: California Energy Commission

Figure 3-18 – Typical Kraft Faced Vapor Retarder Facing

3.6.2 Prescriptive Requirements

A. Roof/Ceiling

The prescriptive package, Component Package A, compliance method requires R-38 insulation or a U-factor of 0.025 in climate zones 1, and 11 through 16. R-30 insulation or U-factor of 0.031 is required in all other climate zones. In addition, a radiant barrier is required in climate zones 2 through 15; the climate zones where air conditioning is more common.

There are three ways to meet the prescriptive insulation requirement. The first way is to install R-30 or R-38 attic insulation in wood-framed construction. Wood-framed constructions include those in Tables 4.2.1 and 4.2.2 in Reference Joint Appendix JA4.

The second way is to use a different roof assembly from Reference Joint Appendix JA4, including structural insulated panel systems (SIPS) or metal-framed roofs, as long as they have a U-factor less than that of a wood-framed attic (the choices from Table 4.2.1 in Reference Joint Appendix JA4). The U-factor criteria are 0.025 (Table 4.2.1, cell entry A21) in climate zones 1 and 11 through 16 (where R-38 is required) and 0.031 (Table 4.2.1, cell entry A20) in the other climate zones (where R-30 is required).

The third way is to use the Energy Commission's EZ-Frame assembly calculator to calculate the U-factor of the assembly components intended for the building design than those listed for Reference Joint Appendix JA4. The EZ-Frame assembly calculator can be used to calculate the total overall R-value and assembly's U-factor. EZ-Frame is based on procedures of ASHRAE Handbook of Fundamentals.

Note that R-30 or R-38 installed in a wood rafter construction (the choices from JA4 Table 4.2.2) are acceptable for complying with Component Package A, since they have the minimum required insulation, even though these have a U-factor higher than the U-factor criteria stated above.

Construction Practice/Compliance and Enforcement

Insulation coverage should extend far enough to the outside walls to cover the bottom chord of the truss. However, insulation should not block eave vents in attics because the flow of air through the attic space helps remove moisture that can build up in the attic and condense on the underside of the roof. This can cause structural damage and reduce the insulation's effectiveness.

Insulation may be tapered near the eave, but it must be applied at a rate to cover the entire ceiling at the specified level. An elevated truss is not required but may be desirable. See the Advanced Assembly section.

B. RADIANT BARRIERS

§150.1(c)2

The prescriptive requirements call for a radiant barrier in climate zones 2 through 15. The radiant barrier is a reflective material that reduces radiant heat transfer caused by solar heat gain in the roof. Radiant barriers reduce the radiant gain to air distribution ducts and insulation located below the radiant barrier, typically within the attic space. In the performance approach, radiant barriers are modeled as separate adjustments to the heating U-factor and the cooling U-factor. The duct efficiency is also affected by the presence of a radiant barrier when using the performance approach.

Radiant Barrier Construction Practice

The most common way of meeting the radiant barrier requirement is to use roof sheathing that has a radiant barrier bonded to it by the manufacturer. Some oriented strand board (OSB) products have a factory-applied radiant barrier. The sheathing is installed with the radiant barrier (shiny side) facing down toward the attic space. Alternatively, a radiant barrier material that meets the same ASTM test and moisture perforation requirements that apply to factory-laminated foil can be field-laminated. Field lamination must use a secure mechanical means of holding the foil type material to the bottom of the roof decking such as staples or nails that do not penetrate all the way through the roof deck material. Roofs with gable ends must have a radiant barrier installed on them to meet the radiant barrier requirement.

Other acceptable methods are to drape a foil type radiant barrier over the top of the top chords before the sheathing is installed, stapling the radiant barrier between the top chords after the sheathing is installed, and stapling the radiant barrier to the underside of the truss/rafters (top chord). For these installation methods, the foil must be installed with spacing requirements as described in Residential Reference Appendices RA4.2.1. Installation of radiant barriers is somewhat more challenging in the case of closed rafter spaces, particularly when roof sheathing is installed that does not include a laminated foil type radiant barrier. Radiant barrier foil material may be field-laminated after the sheathing has been installed by "laminating" the foil as described above to the roof sheathing between framing members. This construction type is described in the Residential Reference Appendices RA4.2.1.1. See below for drawings of radiant barrier installation methods.

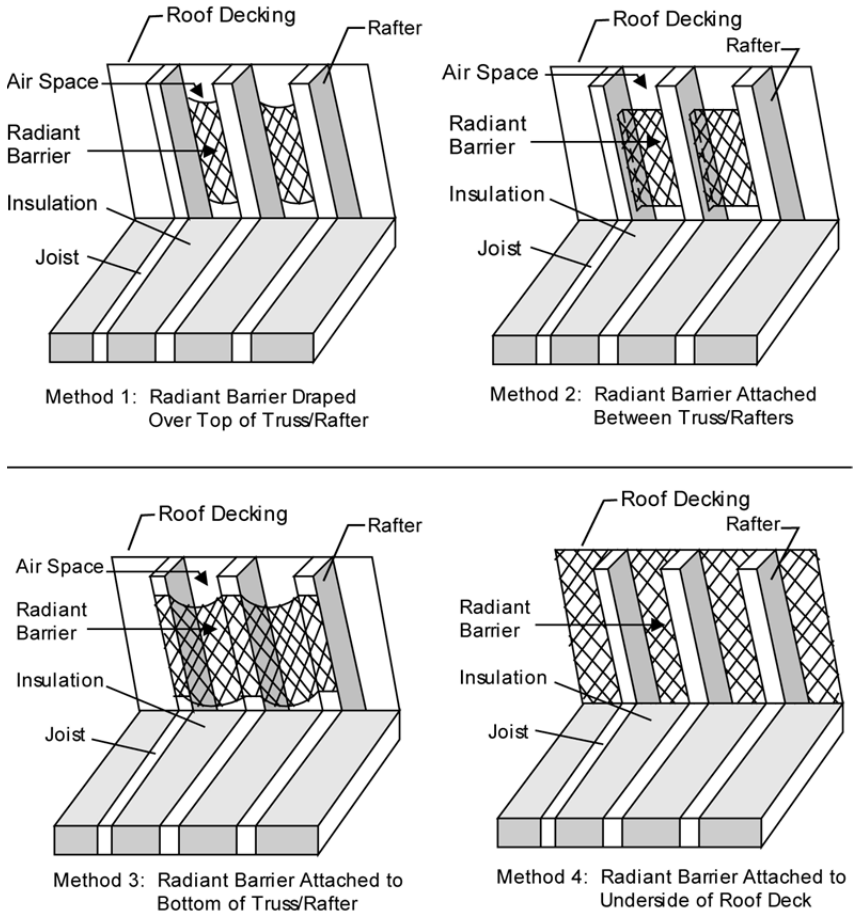

Figure 3-19 – Methods of Installation for Radiant Barriers

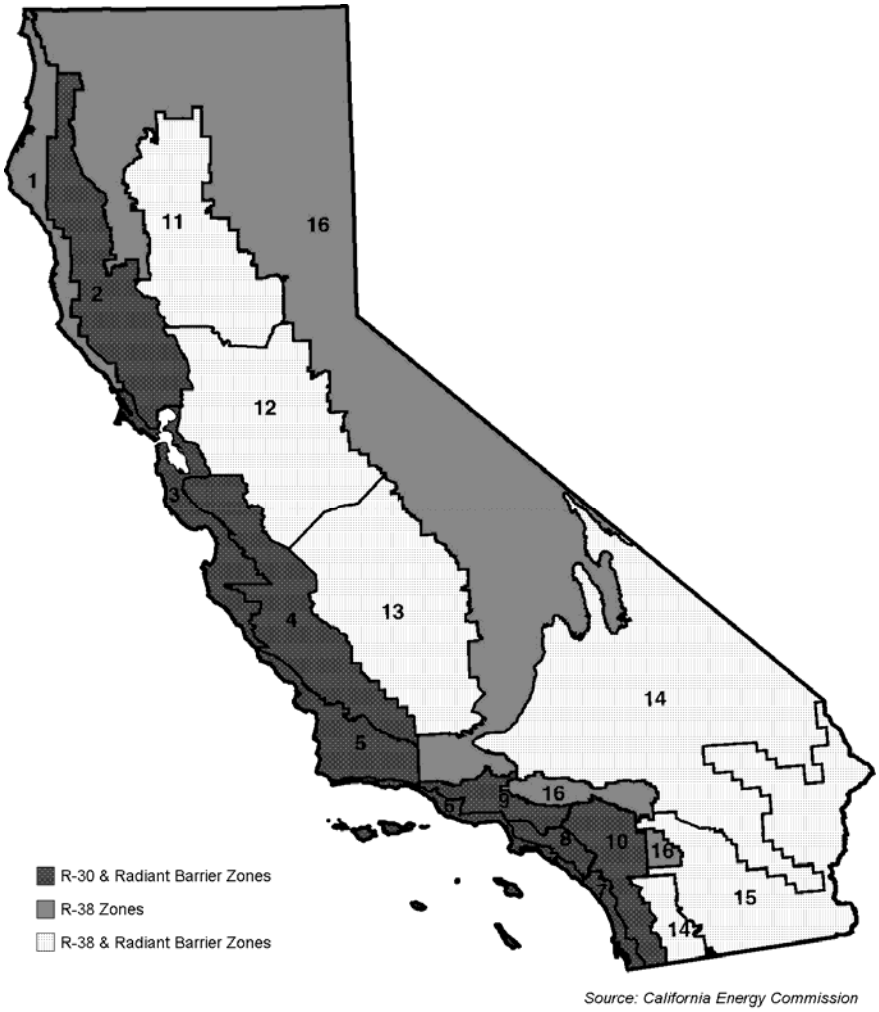

Figure 3-20 – Package A Prescriptive Ceiling/Roof Insulation Requirements

1.

C. Roofing Products (Cool Roof)

§150.1(c)11

Cool roofs of steep and low-sloped roofs are required in some climate zones. A low-slope roof is defined as a surface with a pitch less than or equal to 2:12 (9.5 degrees from the horizontal or less) while a steep-slope roof is a surface with a pitch greater than 2:12 (more than 9.5 degrees from the horizontal). The prescriptive requirement is based on an aged solar reflectance and thermal emittance tested value from the CRRC.

An alternative to the aged solar reflectance and thermal emittance is to use the Solar Reflectance Index (SRI) to show compliance. A calculator has been produced to calculate the SRI by designating the Solar Reflectance and Thermal emittance of the desired roofing material. The calculator can be found at http://www.energy.ca.gov/title24/2013standards. To calculate the SRI, the 3-year aged value of the roofing product must be used. By using the SRI calculator a cool roof may comply with an emittance lower than 0.85, as long as the aged reflectance is higher and vice versa.

The residential roofing product requirement in the prescriptive package is as follows. For steep-sloped applications in climate zones 10-15, the three year aged solar reflectance requirement of 0.20 and a (three year aged or initial) thermal emittance requirement of 0.75, or a minimum solar reflectance index (SRI) of 16.

For low-sloped roofing applications, in climate zones 13 and 15, there is a minimum aged solar reflectance of 0.55 and thermal emittance of 0.75, or a minimum SRI of 64.

There are two exceptions to meeting the roofing products requirements in the prescriptive package:

The roof area with building integrated photovoltaic panels and building integrated solar thermal panels are exempt from the minimum requirements for aged solar reflectance and thermal emittance or SRI Exception 1 to §150.1(c)11B.

Roof constructions that have thermal mass over the roof membrane with a weight of at least 25 lb/ft² are exempt from the minimum requirements for aged solar reflectance and thermal emittance or SRI under Exception 2 to §150.1(c)11B.

Construction Practice/Compliance and Enforcement

The compliance and enforcement process should ensure that the cool roof efficiency values (solar reflectance and thermal emittance values) modeled on the CF1R form are specified on the building plans, and that those same values of the actual installed cool roof product meet or exceed the efficiency values on the CF1R form. For more information on Compliance and Enforcement on cool roof, see chapter 2 of this manual.

Example 3-20

Question

A computer method analysis shows that a new house requires R-19 ceiling insulation to comply using the performance approach, but the minimum mandatory insulation level for ceiling insulation is only R-30. Which insulation level should be used?

Answer

R-30 the higher insulation level must be installed for the building to comply. In some cases such as this, minimum mandatory measures are superseded by stricter compliance measures when using the performance approach.

Example 3-21

Question

A small addition to an existing house appears to comply using only R-15 ceiling insulation with the performance approach. Does this insulation level comply with the Standards?

Answer

No. R-15 would not be sufficient because the required minimum ceiling insulation level established by the mandatory measures is R-30. However, R-15 could be used in limited areas, as follows:

1. 16-inches on center framing with attic with the weighted average U-factor for the entire ceiling/roof less than 0.032.

2. 24-inches on center framing with attic with the weighted average U-factor for the entire ceiling/roof less than 0.031

3. 16-inches on center rafter without attic with the weighted average U-factor for the entire ceiling/roof less than 0.051.

4. 24-inches on center rafter without attic with the weighted average U-factor for the entire ceiling/roof less than 0.049.

D. Wall Insulation

1. Framed Walls

§150.1(c)1B

The Package A prescriptive requirements (Standards Table 150.1-A call for either R-15 cavity wall insulation with R-4 continuous insulation or R-13 cavity wall insulation with R-5 continuous insulation with 2x4 framing or a U-factor of 0.065 in all climate zones.

Wood-framed walls may comply by specifying and installing the minimum R-value indicated. For metal-framed walls, or as an alternative to meeting the installed R-value in wood-framed walls, the designer may choose any wall construction from Reference Joint Appendix JA4 that has a U-factor equal to or less than 0.065).

Metal-framed assemblies will require rigid insulation in order to meet the maximum U-factor criteria. U-factors for metal-framed walls are given in Reference Joint Appendix JA4.

Demising partitions and knee walls are not required to meet the prescriptive requirements of §150.1(c)1B. Demising partitions and knee walls are required to meet the mandatory minimum insulation requirement as set in §150.0(c)1 and 2. §150.0(c)1 requires that insulation not less than R-13 be installed between a 2x4 framing, or a U-factor which shall not exceed U-0.102. §150.0(c)2 requires insulation not less than R-19 be installed in framing of 2x6 inch or greater, or a U-factor equal to or less than 0.074.

2. Mass Walls

§150.1(c)

These sections are also shown in Appendix B of this document.

The prescriptive requirements have separate criteria for mass walls with interior insulation and mass walls with exterior insulation. “Interior” denotes that insulation is installed on the interior surface of the mass wall and “exterior” denotes insulation is installed on the exterior surface of the mass wall. Placement of insulation on mass walls does affect the thermal mass properties of a building. The affect of thermal mass helps temper the fluctuation of heating and cooling loads throughout the year in the building.

3. Concrete Mass and Furred Walls

To determine the total R-value of a mass wall, the U-factor from Reference Joint Appendix JA4 Table 4.3.5, 4.3.6 or other masonry tables is added to an insulation layer selected from Reference Joint Appendix JA4 Table 4.3.14. When the prescriptive requirements are used, the insulation must be installed integral with or on the exterior or interior of the mass wall.

Figure 3-21 – Brick Wall with Furring Details

The walls addressed in the Properties of Solid Unit Masonry and Solid Concrete Walls tables in the Reference Joint Appendix JA4 tables are rarely used in residential construction, but are common in some types of nonresidential construction. For residential construction, the Prescriptive CF1R, CF1R-ADD and CF1R-ALT can calculate complex wall systems to include furred strip walls.

A four step process is required to calculate the effective U-factor of a furred wall;

1. Select one of the concrete or masonry walls tables and select a U-factor; and
2. Select the appropriate Effective R-value for Interior or Exterior Insulation Layers in Table 4.3.14; and
3. Fill out the CF1R Insulation Values for Opaque Surface table columns. To achieve the Proposed Assembly U-factor or R-value column, first the *Furring Strips Construction Table for Mass Walls Only* table needs to be filled out; and
4. Calculate the Final Assembly R-value and carry the value back to the Insulation Values for Opaque Surface Details table. Compare the R-value, it must be equal to or greater than the mass standard R-value from Energy Standards Prescriptive TABLE 150.1-A.

Construction Practice/Compliance and Enforcement

The compliance and enforcement process should ensure that the insulation R-value for walls (cavity and/or continuous) modeled on the CF1R form is specified on the building plans and that the same value for the actual installed wall insulation meets or exceeds the R-value on the CF1R form. For more information on Compliance and Enforcement on *wall insulation*, see Chapter 2 of this manual.

Because it is difficult to inspect wall insulation behind tub/shower enclosures after the enclosures are installed, insulation of these wall sections should be inspected during the framing inspection.

Batt and loose fill insulation should fill the wall cavity evenly. If Kraft or foil-faced insulation is used, it should be installed per manufacturer recommendations to minimize air leakage and avoid sagging of the insulation.

Wall insulation should extend into the perimeter floor joist (rim joist) cavities along the same plane as the wall.

If a vapor retarder is required, it must be installed on the conditioned space side of the framing.

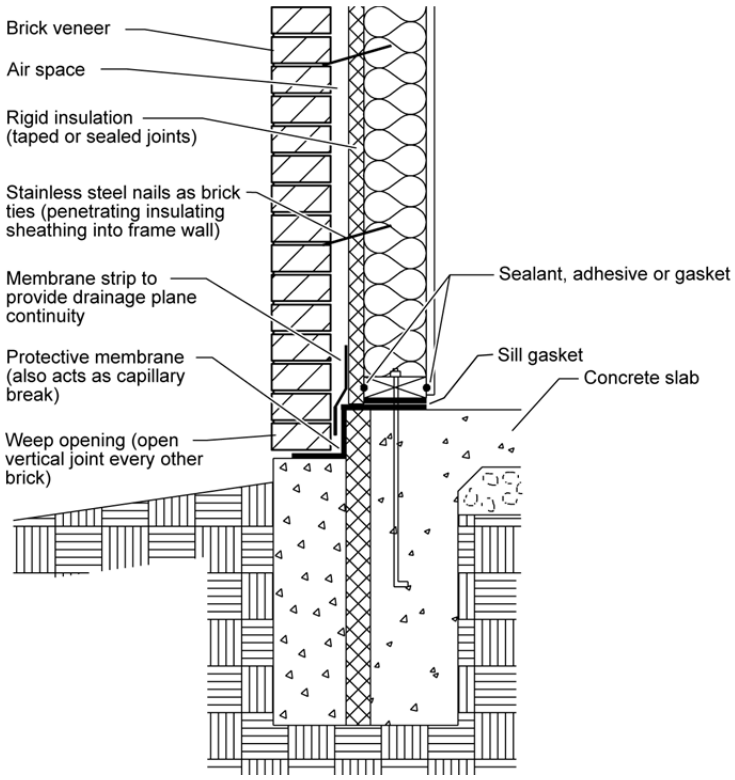

Figure 3-22 – Brick Wall Construction Details

Wood-Framed Wall with Brick Veneer, Mandatory Minimum R-13 Insulation

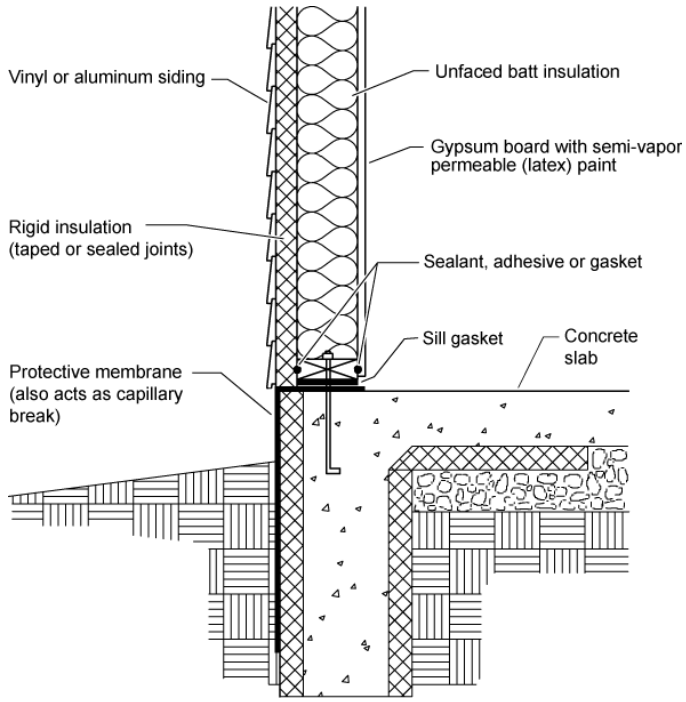

Figure 3-23 – Wall Construction Detail

Wood-Framed Wall with Vinyl or Aluminum Siding, Mandatory Minimum R-13 Insulation

Example 3-22

Question

Do new residential buildings or additions consisting of block walls (for example, converting a garage into living space) have to comply with the R-13 minimum wall insulation requirement? If not, what insulation R-value do they need?

Answer

Framed walls must meet the R-13 requirement or the U-factor associated with it. There is no mandatory minimum insulation requirement for mass walls. However, there are minimum insulation requirements in Package A for both framed and mass walls that must be met under Prescriptive compliance.

Example 3-23

Question

If 2-inches of medium density foam is used in combination with R-13 batt insulation in the cavity of a 2x6 wood framed wall, without continuous insulation added, what is the total U-factor for the wall assembly? Does this assembly meet prescriptive compliance Package A requirements?

Answer

No. Medium density foam is given a default value of R-5.8 per inch. When added with R-11 batt insulation, the total cavity insulation is R-22. The Reference Joint Appendix JA4 Table 4.3.1 shows the wall U-factor for this assembly as 0.072 (cell entry A7). The assembly does meet the minimum mandatory wall insulation U-factor requirement of 0.110, but does not meet the prescriptive compliance Package A U-factor requirement of 0.065. To meet the Package A requirement, Advanced Wall System (AWS) techniques may be used to reduce the framing factor, or continuous insulation may be added.

E. Floor Insulation

1. Raised-floor

§150.1(c)1C

Package A prescriptive requirements call for R-19 or maximum U-factor of 0.037 insulation in raised floors in all climates.

The requirement may be satisfied by installing the specified amount of insulation in a wood-framed floor or by meeting an equivalent U-factor. U-factors for raised-floors are listed in Reference Joint Appendix JA4. Concrete floors separating multifamily habitable space from a parking garage are also considered a raised-floor. For this class of construction, R-4 insulation is required for climate zones 12 and 15, and R-8 is required for climate zones 1, 2, 11, 13, 14, and 16. No insulation is required in other climate zones with a concrete raised floor.

Table 3-7 – Raised Floor Constructions Used as Basis for Equivalent U-factor Compliance

Insulation R-value	Crawlspace?	Reference Joint Appendix JA4 Construction and Table Cell Entry	Equivalent U-factor
R-19	No	4.4.2 A4	0.049
R-19	Yes	4.4.1 A4	0.037

Construction Practice/Compliance and Enforcement

Floor insulation should be installed in direct contact with the subfloor so that there is no air space between the insulation and the floor. Support is needed to prevent the insulation from falling, sagging, or deteriorating.

Options for support include netting stapled to the underside of floor joists, insulation hangers running perpendicular to the joists, or other suitable means. Insulation hangers should be spaced at 18 inch or less prior to rolling out the insulation. Insulation hangers are heavy wires up to 48 inch long with pointed ends, which provide positive wood penetration. Netting or mesh should be nailed or stapled to the underside of the joists. Floor insulation should not cover foundation vents.

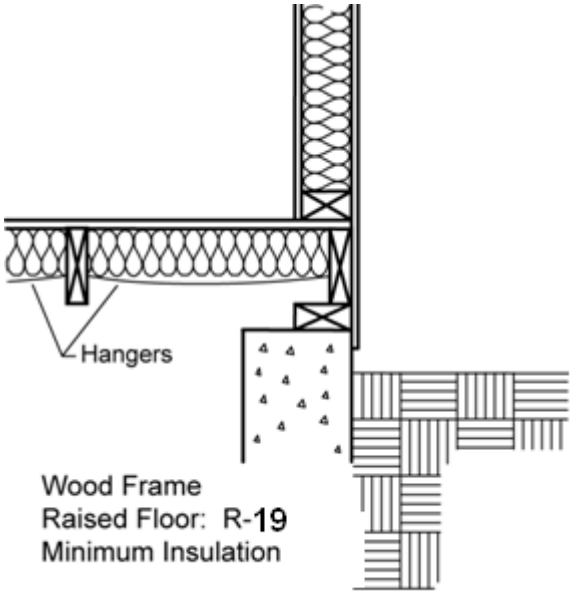

Figure 3-24 – Raised Floor Insulation

2. Slab Insulation

§150.1(c)1D

Prescriptive Table 150.1-A, Package A, requires slab insulation only in climate zone 16. In this case, a minimum of R-7 must be installed. The insulation must be installed to a minimum depth of 16 in. or to the bottom of the footing, whichever is less. The depth is measured from the top of the insulation, as near the top-of-slab as practical, to the bottom edge of the insulation (see).

Perimeter insulation is not required along the slab edge between conditioned space and the concrete slab of an attached unconditioned enclosed space such as a garage, covered porch, or covered patio. Neither would it be practical or necessary to insulate concrete steps attached to the outside slab edge.

In situations where the slab is below grade and slab edge insulation is being applied to a basement or retaining wall, the top of the slab edge insulation should be placed as near to ground level as possible and extended down at least 16 inches. In situations where the slab is above grade and slab edge insulation is being applied, the top of the slab edge insulation should be placed at the top of the slab.

Construction Practice/Compliance and Enforcement

Slab-edge insulation should be protected from physical damage and ultraviolet light exposure because deterioration from moisture, pest infestation, ultraviolet light and other factors can significantly reduce the effectiveness of the insulation.

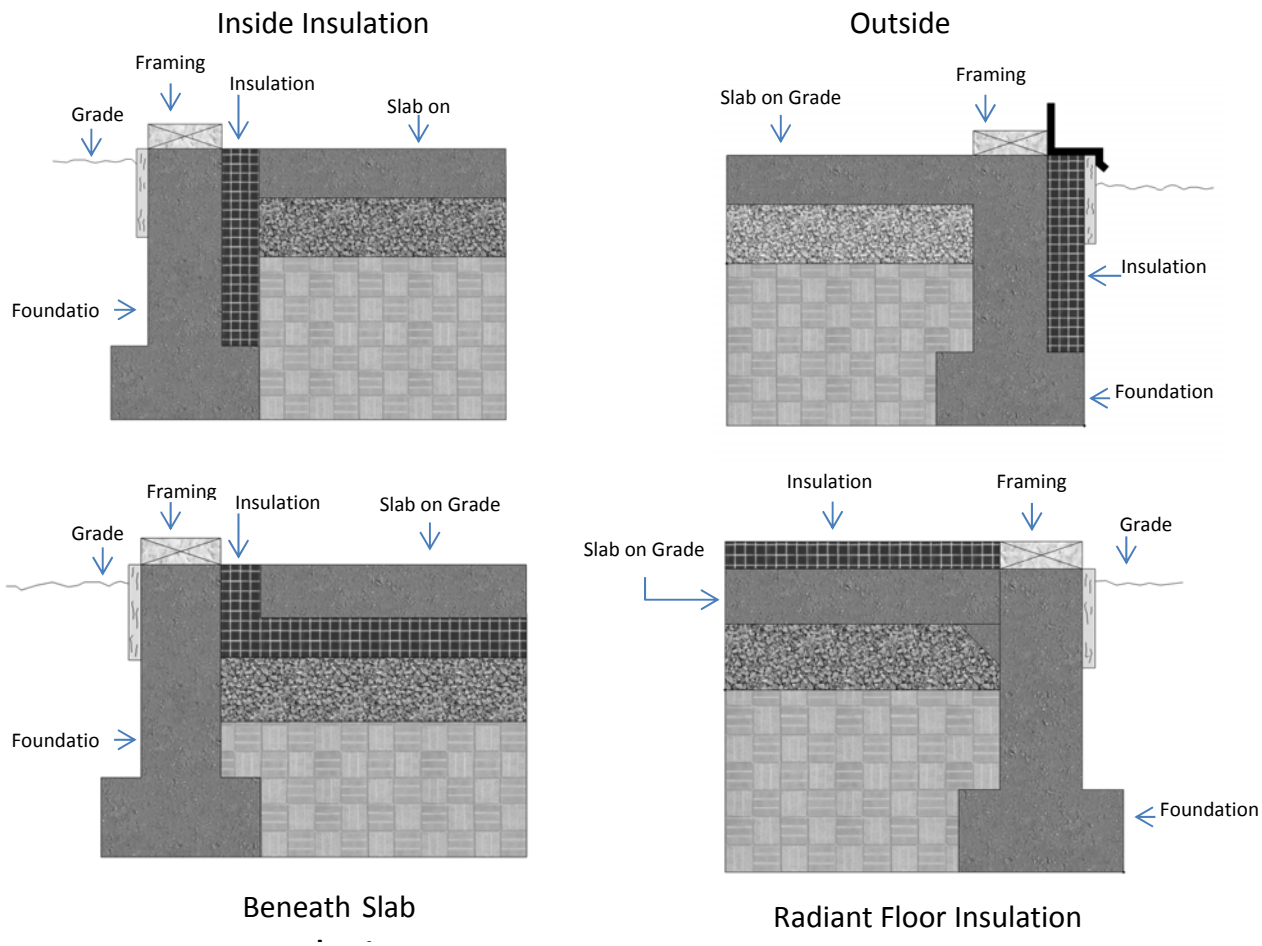

Figure 3-25 – Allowed Slab Edge Insulation Placement

When slab-edge insulation is required by the prescriptive or performance requirements, then minimum depth is 16 inch or to the top of the footing, whichever is less.

Example 3-24

Question

What are the slab edge insulation requirements for a hydronic-heating system with the hot water pipes in the slab?

Answer

The requirements for insulation of heated slabs can be found in §110.8(g) of the Standards and are described in Chapter 4 of this manual. The material and installation specifications are as follows:

- Insulation values as shown in Table 110.8-A of the Standards
- Protection from physical damage and ultra-violet light deterioration
- Water absorption rate no greater than 0.3% (ASTM-C272)
- Water vapor permeance no greater than 2.0 perm/inch (ASTM-E96)

3.7 Advanced Assembly Systems

The Energy Commission encourages the use of energy saving techniques and designs for showing compliance with the standards. Many standard products with traditional construction practices can be used in ways that improve building efficiency beyond requirements set by the standards. In addition, innovative construction techniques and building products are being used more often by designers and builders who recognize the value of energy efficient high performance buildings. When the performance compliance method is used an energy credit can be taken for design strategies that reduce building energy use below the standard design energy budget (compliance credit). Some strategies may require third-party verification by a HERS rater, others do not.

A. Quality Insulation Installation (QII)

Energy Commission videos

Reference Residential Appendix RA3.5

Many residential insulation installations have flaws that degrade thermal performance. Four problems are generally responsible for this degradation:

1. There is an inadequate air barrier in the building envelope, or holes and gaps within the air barrier system inhibit its ability to limit air leakage.
2. Insulation is not in contact with the air barrier creating air spaces that short-circuits the insulation's thermal control when the air barrier is not limiting air leakage properly.
3. The insulation has voids or gaps resulting in portions of the construction assembly that are not insulated and, therefore, has less thermal resistance than other portions of the assembly.
4. The insulation is compressed, creating a gap near the air barrier and/or reducing the thickness of the insulation.

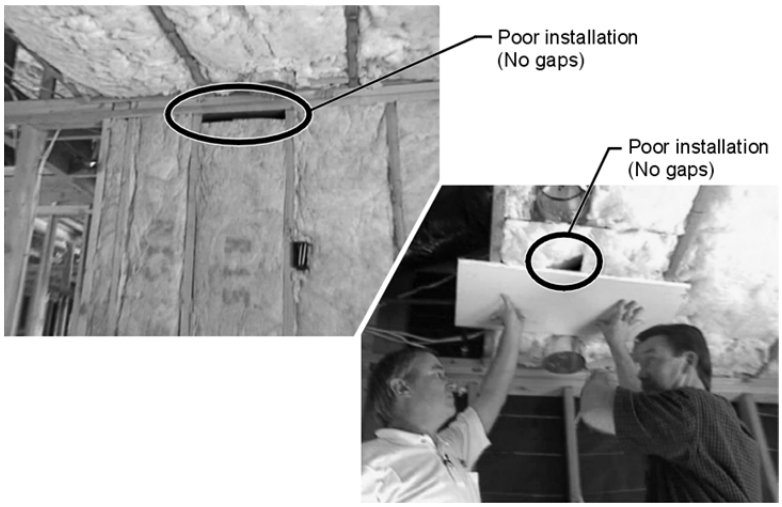

Source: California Energy Commission

Figure 3-26 – Examples of Poor Quality Insulation Installation

An energy credit for correctly installing an air barrier and insulation to eliminate or reduce common problems associated with poor installation are provided in the Reference Appendices, Residential Appendix RA3.5. This compliance credit applies to framed and nonframed assemblies. Residential construction may incorporate multiple frame types; for example, using a combination of nonframed walls with a framed roof/ceiling. Likewise, multiple insulation materials are often used. Framed assemblies include wood and steel construction insulated with batts of mineral fiber, mineral and natural wool, and cellulose; loose fill insulation of mineral fiber, mineral and natural wool, and cellulose, and light and medium density spray polyurethane foam; and for rigid board insulation used on the exterior or interior of framed and nonframed assemblies. Non-framed assemblies include structural insulated panels, insulated concrete forms, and mass walls of masonry, concrete and concrete sandwich panels, log walls, and straw bale.

This compliance credit can only be taken for the whole building—roof/ceilings, walls and floors, and requires field verification by a third-party HERS rater. Further explanation is provided below:

- Compliance credit is not allowed for walls alone; or for roofs/ceilings but not walls also.
- Compliance credit is allowed for a building built on a slab floor, where the slab has no requirement for insulation. However, if insulation is installed (i.e., slab edge insulation for radiant floor heating) then the integrity of the slab edge insulation must also be field verified in addition to the air barrier and insulation system for walls and the roof/ceiling.
- Combinations of insulation types (hybrid systems) are allowed.
- An air barrier shall be installed for the entire envelope.
- Compliance credit is allowed for additions to existing buildings where energy compliance has been demonstrated for the “addition alone” (§150.2(a)2A).

- Compliance credit is not allowed for additions to existing buildings where the "existing plus alteration plus addition" approach is used (§150.2(a)2B).

Approved computer compliance modeling software automatically reduces the effectiveness of insulation for compliance purposes. This reduction is accounted for in developing the Standards and prescribing the required prescriptive measures for each climate zone to establish the standard design energy budget in performance compliance calculations. The effect of a poorly installed air barrier system and envelope insulation results in higher wall heat loss and heat gain than standard R-value and U-factor calculations would indicate. Similar increases in heat loss and heat gain are experienced for roof/ceilings where construction and installation flaws are present.

Structural Bracing, Tie-Downs, Steel Structural Framing

Reference Residential Appendix RA3.5.5.2.8

When metal bracing, tie-downs or steel structural framing is used to connect to wood framing for structural or seismic purposes the QII energy credit still can be taken if:

1. Metal bracing, tie-downs or steel structural framing is identified on the structural plans, and
2. Insulation is installed in a manner that restricts the thermal bridging through the structural framing assembly, and
3. Insulation fills the entire cavity and/or adheres to all sides and ends of structural assembly that separates conditioned from unconditioned space.

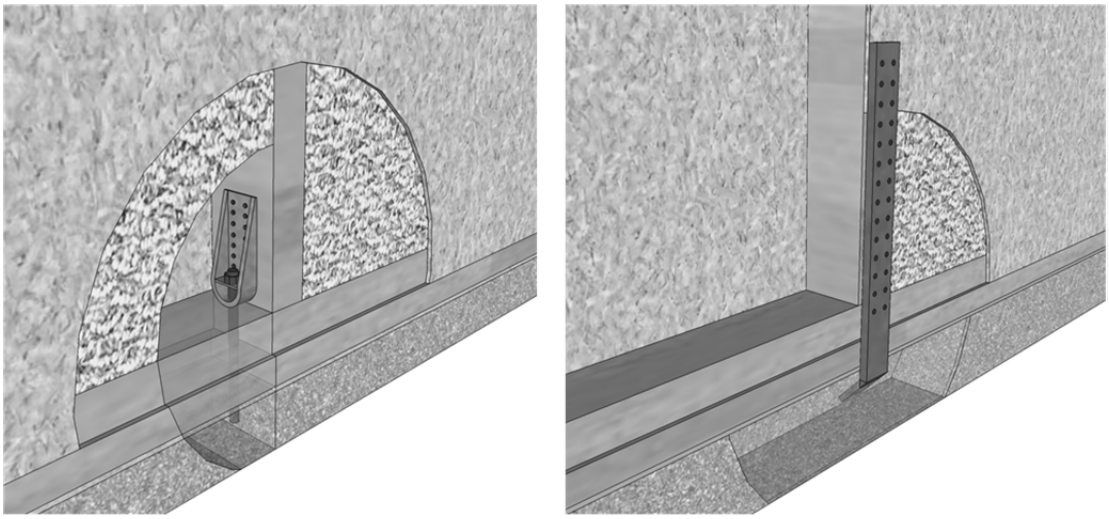

Figure 3-27 – STRUCTURAL BRACING, TIE-DOWNS

To take advantage of the QII energy credit two primary installation criteria must be adhered to and they both will be field verified by a HERS rater:

1. Air Barrier

Reference Residential Appendix RA3.5.2

An air barrier shall be installed enclosing the entire building and when this credit is shown to be taken on compliance documentation a third-party HERS rater is required to verify the integrity of the air barrier system. The air barrier must be installed in a continuous manner across all components of framed and non-framed envelope assemblies. The installer shall provide evidence with compliance documentation that the air barrier system meets one or more of the air barrier specifications shown in Table 3-8 below. More detailed explanation is provided in Reference Appendices, Residential Appendix RA3.5. Documentation for the air barrier includes product data sheets and manufacturer specifications and installation guidelines. The third-party HERS rater shall verify that the air barrier has been installed properly and is integral with the insulation being used throughout the building.

Table 3-8 – Continuous Air Barrier

Continuous Air Barrier	A combination of interconnected materials and assemblies joined and sealed together to provide a continuous barrier to air leakage through the building envelope separating conditioned from unconditioned space, or adjoining conditioned spaces of different occupancies or uses. An air barrier is required in all thermal envelope assemblies to limit air movement between unconditioned/outside spaces and conditioned/inside spaces and must meet one of the following: 1. Using individual materials that have an air permeance not exceeding 0.004cfm/ft^2 under a pressure differential of 0.3in. w.g. (1.57psf) (0.02 L/s.m^2 at 75 pa) when tested in accordance with ASTM E2178; or 2. Using assemblies of materials and components that have an average air leakage not to exceed 0.04 cfm/ft2 under a pressure differential of 0.3 in. w.g (1.57psf) (0.2 L/s.m^2 at 75 pa) when tested in accordance with ASTM E2357, ASTM E1677, ASTM E1680 or ASTM E283; or 3. Testing the completed building and demonstrating that the air leakage rate of the building envelope does not exceed 0.40 cfm/ft^2 at a pressure differential of 0.3 in w.g. (1.57 psf) (2.0 L/s.m^2 at 75 pa) in accordance with ASTM E779 or an equivalent approved method. Individual materials and assemblies of materials that can demonstrate compliance with the air barrier testing requirements must be installed according to the manufacturer's instructions and a HERS rater shall verify the integrity of the installation. Below are example materials meeting the air permeance testing performance levels of 1 above. Manufacturers of these and other product types must provide a specification or product data sheet showing compliance to the ASTM testing requirements to be considered as an air barrier. -- Plywood – minimum 3/8 inch -- Oriented strand board – minimum. 3/8 inches -- Extruded polystyrene insulation board – minimum. ½ inch -- Foil-back polyisocyanurate insulation board – minimum. ½ inch -- Foil backed urethane foam insulation (1 inch) -- Closed cell spray polyurethane foam with a minimum density of 2.0 pcf and a minimum thickness of 2.0 inches -- Open cell spray polyurethane foam with a minimum density of 0.4 to1.5 pcf and a minimum thickness of 5½ inches -- Exterior or interior gypsum board - minimum 1/2 inch -- Cement board - minimum 1/2 inch -- Built up roofing membrane -- Modified bituminous roof membrane -- Particleboard-minimum1/2 inch -- Fully adhered single-ply roof membrane -- Portland cement/sand parge ,or gypsum plaster minimum 5/8 inch

	-- Cast-in-place and precast concrete. -- Fully grouted uninsulated and insulated concrete block masonry -- Sheet steel or aluminum

2. Insulation Installation

All insulation shall be installed properly throughout the entire building and when this credit is taken on compliance documentation a third-party HERS rater is required to verify the integrity of the installed insulation. The installer shall provide evidence with compliance documentation that all insulation specified on compliance documentation is installed to meet specified R-values and assembly U-factors.

General insulation types are shown in Table 3-9 below. More detailed explanation is provided in the wall insulation discussion of Section 3.3.2, 3.6.1, and in Reference Appendices, Residential Appendix RA3.5.

Documentation of insulation R-values and assembly U-factors includes product data sheets, manufacturer specifications and installation guidelines, insulation product and assembly testing information, and U-factor calculations following the procedures specified in Reference Appendices, Joint Appendix JA4, through use of the EZ-Frame Assembly Calculator, or from results of approved performance compliance computer software. The third-party HERS rater shall verify that all insulation has been installed properly and is integral with the air barrier being used throughout the building.

Table 3-9 – Insulation Types

Insulation Types--framed assemblies	There are four basic types of insulation, or insulation "systems", installed in residential buildings and their use varies based on the design and type of construction: 1. **Batt and Blanket**: Batt and blanket insulation is made of mineral fiber and mineral wool -- either processed fiberglass, rock or slag wool; natural wool products—animal wool or cotton based products; or cellulose materials. These products are used to insulate below floors, above ceilings, below roofs, and within walls. 2. **Loose-fill**: Loose-fill insulation includes loose fibers or fiber pellets that are blown into building cavities or attics using special equipment. Loose-fill insulations typically are produced using mineral fiber, mineral or natural wool (animal or cotton based products), or cellulose. They are installed in walls, floors, attics and below roofs using a dry-pack process or a moist-spray technique, and may include a netting material. 3. **Rigid Board**: Rigid board insulation sheathing is made from fiberglass, expanded polystyrene (EPS), extruded polystyrene (XPS), polyisocyanurate, or polyurethane. This type of insulation is used for above roof decks, exterior walls, cathedral ceilings, basement walls, as perimeter insulation at concrete slab edges, and to insulate special framing situations such as window and door headers, and around metal seismic bracing. Rigid board insulation may also be integral to exterior siding materials. 4. **Spray Polyurethane Foam (SPF)**: A two-part liquid foamed plastic (such as polyurethane or modified urethane) material formed by the reaction of an isocyanurate and a polyol that uses a blowing agent to develop a cellular structure when spray applied onto a substrate. SPF insulation is a two-component reactive system mixed at a spray gun or a single-component system that cures by exposure to humidity. The liquid is sprayed through a nozzle into wall, roof/ceiling, and floor cavities. SPF insulation can be formulated to have specific physical properties (i.e., density, compressive strength, fire resistance and R-value). There

	are two types of SPF insulation: a. *Low Density Open-Cell SPF (ocSPF) Insulation*: A spray applied polyurethane foam insulation having an open cellular structure resulting in an installed nominal density of 0.4 to 1.5 pounds per cubic foot (pcf). b. *Medium Density Closed-Cell SPF (ccSPF) Insulation*: A spray applied polyurethane foam insulation having a closed cellular structure resulting in an installed nominal density of greater than 1.5 to less than 2.5 pounds per cubic foot (pcf).
Insulation Types--non-framed assemblies	There are five basic types of non-framed wall systems that provide structural as well as thermal resistance and their use varies based on the design and type of construction: 1. **Structural Insulated Panel (SIP):** A composite building material consisting of an insulating layer of rigid polymer foam sandwiched between two layers of structural board. The board can be sheet metal, plywood, cement or oriented strand board (OSB) and the foam is either expanded polystyrene foam (EPS), extruded polystyrene foam (XPS) or polyurethane foam. SIPs combine several components of conventional building, such as studs and joists, insulation, vapor barrier and air barrier. They can be used for many different applications, such as exterior walls, roofs, floors, and foundation systems. 2. **Insulated Concrete Form (ICF):** A system of formwork for concrete that stays in place as permanent building insulation and is used for cast-in-place, reinforced above and below-grade concrete walls, floors, and roofs. ICFs are interlocking modular units that can be dry-stacked (without mortar) and filled with concrete as a single concrete masonry unit (CMU). ICFs lock together externally and have internal metal or plastic ties to hold the outer layer(s) of insulation to create a concrete form for the structural walls, roof/ceilings, or floors of a building. ICFs are manufactured from several materials including: expanded and extruded polystyrene foam, polyurethane foam, cement-bonded wood fiber, and cement-bonded polystyrene beads. **3. Mass Walls:** a. Masonry types include clay and concrete units, which may be solid or hollow, and glazed or unglazed. Other masonry unit types include cast stone and calcium silicate units. Concrete masonry units (CMU) are made from a mixture of portland cement and aggregates under controlled conditions. Concrete masonry units can be manufactured in different sizes and with a variety of face textures. b. Concrete and concrete sandwich panels typically use a pre-cast form by casting concrete in a reusable mold or "form" which is then cured in a controlled environment, transported to the construction site and lifted into place. Precast stone is distinguished from precast concrete by using a fine aggregate in the mixture giving the appearance of naturally occurring rock or stone. 4. **Log Walls:** Log walls are typically made from trees that have been cut into logs that have not been milled into conventional lumber. Logs used for walls, roofs and/or floor systems may be milled and or laminated by the manufacturer or supplier to meet specific dimensions and fitting and finishing conditions. 5. **Straw Bale:** Straw bale construction is a building method that uses bales of straw (commonly wheat, rice, rye and oat straw) as structural and insulating elements of the building.

2. Reduced Building Air Leakage

Reference Appendices, Residential Appendix RA3.8

An energy credit is allowed through the performance approach when the building's rate of envelope air leakage is less than the air leakage rate assumed for the standard design building. A third-party HERS rater shall verify the air leakage rate shown on compliance documentation through diagnostic testing of the building's air leakage.

The air leakage testing process (i.e., blower door) involves closing all the windows and doors, pressurizing the house with a special fan, usually positioned in a doorway (see Figure 3-28), and measuring the leakage rate, measured in cubic feet per minute at a 50 Pa pressure difference (CFM50). This measurement procedure is described in the Reference Appendices, Residential Appendix RA3.8. It is derived from the Residential Energy Services Network's (RESNET) Mortgage Industry National Home Energy Rating Standards, Standard 800, which is based on ASTM E779 air tightness measurement protocols. This procedure requires the use of software consistent with ASTM E779. This test method is intended to produce a measure of the air tightness of a building envelope for determining the energy credit allowance for reduced building air leakage. Further explanations are described below:

- This procedure shall only be used to verify the building air leakage rate before the building construction permit is finalized when an energy credit for reduced air leakage is being claimed on compliance documentation.
- The Home Energy Rating System (HERS) rater shall measure the building air leakage rate to ensure measured air leakage is less than or equal to the building air leakage rate stated on the Certificate of Compliance, and all other required compliance documentation. HERS verified building air leakage shall be documented on compliance forms.
- This is a whole building credit; therefore, no credit is allowed for the installation of individual envelope measures that may help in reducing the building's air leakage rate, such as for an exterior air retarding wrap, or for an air barrier material or assembly meeting the requirements describe in Table 3-9 above.

Source: California Energy Commission

Figure 3-28 – Blower Door Testing

B. Conventional and Non-Conventional/Advanced Assemblies

1. Roof Assembly

The construction techniques described below are assemblies that can be used in residential construction to help exceed minimum prescriptive requirements, particularly when using the performance compliance approach. This section describes typical constructions for roof deck insulation and raised heel trusses (also called "energy trusses").

a. *Roof Deck Insulation*

An assembly and insulation alternative that helps augment conventional attic insulation that can achieve an energy compliance credit is to install insulation either directly above or directly below the roof deck. Roof deck insulation is not a prescriptive requirement but can be an inexpensive choice that improves the thermal integrity of the roof system. In addition, using roof deck insulation, either with conventional attic insulation that is laid horizontally over the bottom cord of the roof truss, or roof deck insulation (above or below the roof deck) without conventional horizontal attic insulation, can provide an energy tradeoff with other prescriptive measures or used to help meet high performance building energy codes in local jurisdictions, Tier 1 and Tier 2 of the CalGreen Code, or other energy efficiency targets, such as LEED© for Homes and Energy Star.

Roof deck insulation can be particularly effective when air conditioning ducts are located in the attic, since roof deck insulation considerably lowers the attic temperature during the cooling season.

- *Below Roof Deck Insulation*

Insulation installed directly below the roof deck (i.e., batt, spray foam, rigid board) can be placed between the truss members and pinned in place. Other options that can provide somewhat higher R-values are to install loose fill glass fiber or cellulose between roof trusses which has netting underneath. For all cases, the attic can usually be conventionally vented using soffit, eave, and ridge vents, or other acceptable means. When insulation is installed below the roof deck the effect of radiant barrier is to be neglected. The radiant barrier is to be installed with the shiny side facing down toward the attic space. The radiant barrier is a reflective material that reduces radiant heat transfer caused by solar heat gain in the roof. For the radiant barrier to work properly it must not have insulation abutting to the shiny side.

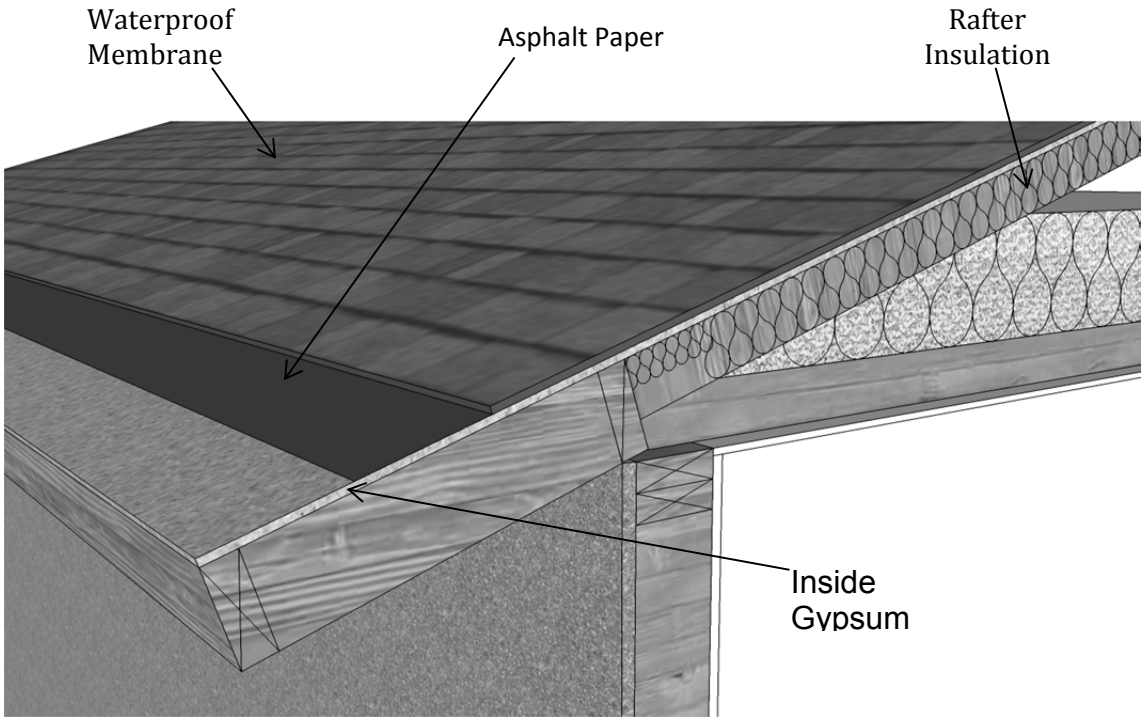

Figure 3-29 – Below Roof Deck Insulation

NOTE: In some climates, placing insulation directly below the roof deck can create a condensation plane on the underside of the roof deck during the winter months. Whenever the outside air temperature is well below the dewpoint temperature of the indoor air (about 40°F to 45°F) there is potential for moisture to condense. For climate zones 11, 12, 13, 15 and 16, above deck insulation may be a better choice, particularly with a vented attic. R-8 of continuous insulation above the roof deck is approximately thermally equivalent to a R-13 batt insulation below the roof deck.

- *Above Roof Deck Insulation*

Above deck insulation can also add effective R-value to the thermal integrity of the roof system. Using rigid board insulation with a minimum of R-4 helps provide additional R-value when conventional ceiling insulation is also installed and an energy credit can be taken even with a vented attic.

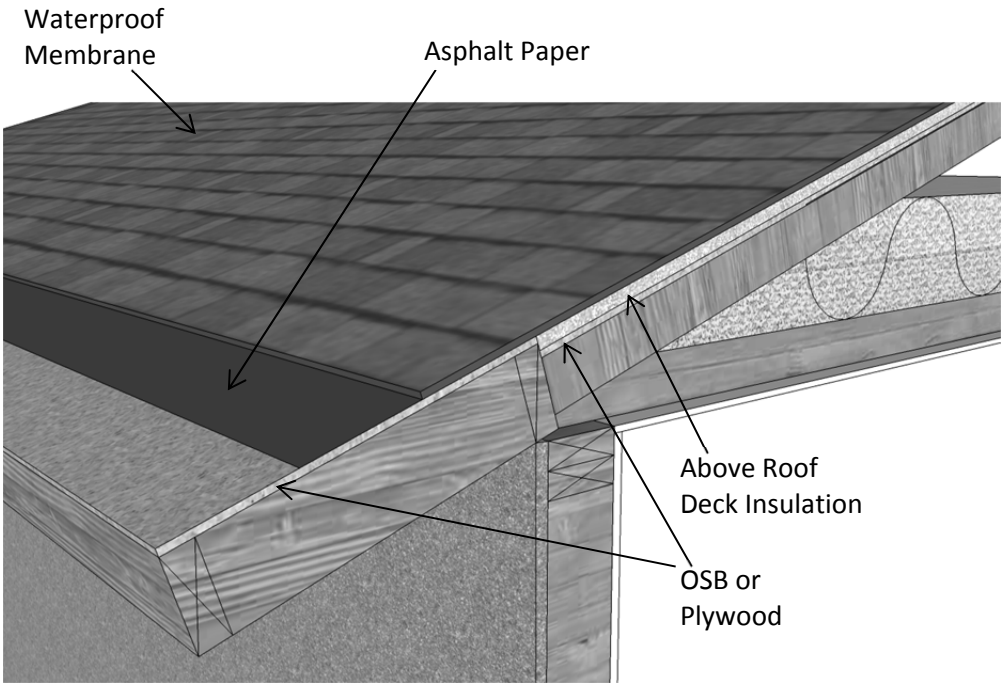

Figure 3-30 – Above Roof Deck Insulation

Compliance software can model the thermal effects and energy benefits of both above deck and below deck insulation, and the effects of a vented versus unvented attic.

2. Attic Ventilation

Where ceiling insulation is installed next to eave or soffit vents, a rigid baffle should be installed at the top plate to direct ventilation air up and over the ceiling insulation (See Figure 3-31). The baffle should extend beyond the height of the ceiling insulation and should have sufficient clearance between the baffle and roof deck at the top. There are a number of acceptable methods for maintaining ventilation air, including pre-formed baffles made of either cardboard or plastic. In some cases, plywood baffles are used.

The California Building Code (CBC) requires a minimum vent area to be provided in roofs with attics, including enclosed rafter roofs creating cathedral or vaulted ceilings. Check with the local building jurisdiction to determine which of the two CBC ventilation requirements are to be followed:

- CBC, Title 24, Part 2, Vol. 1, Section 1203.2 requires that the net free ventilating area shall not be less than 1/300 of the area of the space ventilated.
- CBC, Title 24, Part 2, Vol. 2.5, Section R806.2 requires that the net free ventilating area shall not be less than 1/150 of the area of the space ventilated. This ratio may be reduced to 1/300 if a ceiling vapor retarder is installed.

In either situation, a minimum of 50% of the vents must be located in the upper portion of the space being ventilated at least 3 feet above eave or cornice vents.

Ventilated openings are covered with corrosion resistant wire cloth screening or similar mesh material. When part of the vent area is blocked by meshes or louvers, the resulting “net free area” of the vent must be considered when meeting ventilation requirements.

Many jurisdictions in California are covered by Wildland Urban Interface (WUI) regulations where specific measures for construction materials must be used to improve fire resistance for the building. These regulations require special vents that are expressly tested to resist the intrusion of flame and burning embers. Check with the building department to ensure compliance with local codes.

Wood Rafter Constructions

Ventilating framed rafter spaces is more difficult than ventilating attics because each framing cavity requires its own vent openings. It is common practice with loose-fill insulation material to completely fill the cavity so that there is no ventilation at all. With batt insulation it is possible to ventilate above the insulation using higher density (cathedral ceiling) batts because this material is specifically manufactured to allow a minimum of 1 inch above the top of the insulation to allow for ventilation. If spray polyurethane foam is used, it is applied to the underside of the roof deck leaving no ventilation space.

Attic ventilation, particularly in hotter climate zones, can provide an energy benefit. However, no energy credit is allowed for reducing the ventilation area below building code requirements.

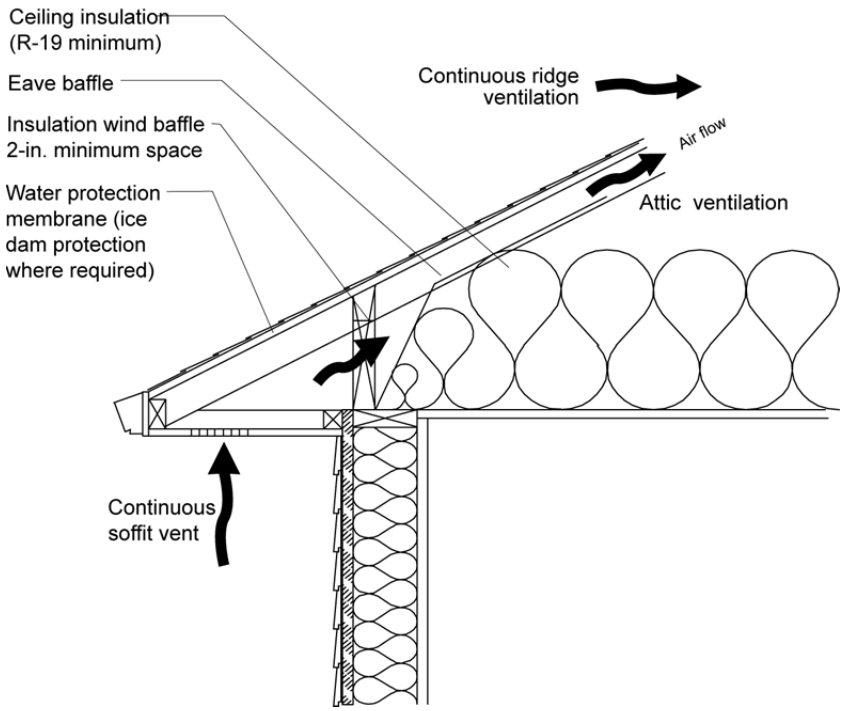

Figure 3-31 – Ceiling Insulation Construction Detail

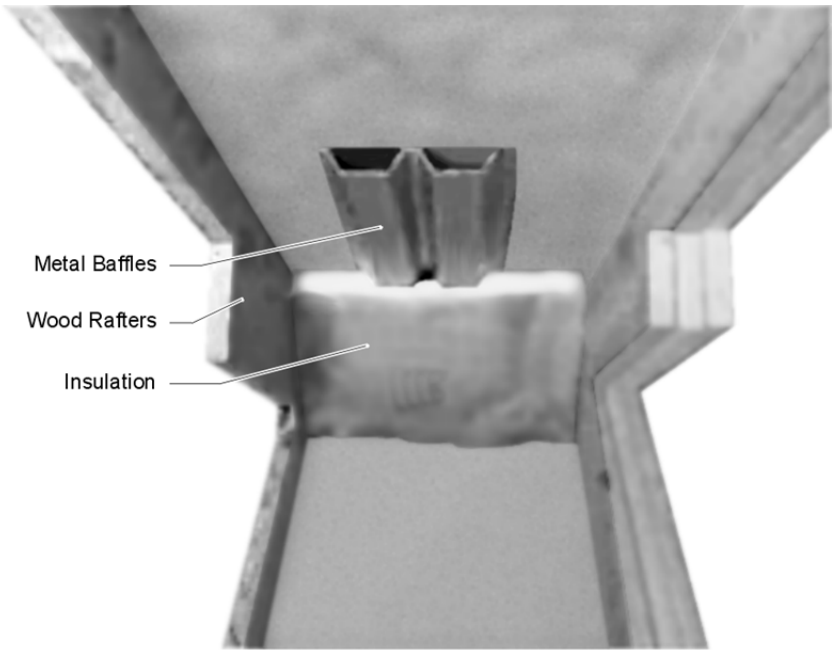

Source: California Energy Commission

Figure 3-32 – Baffles at the Eave in Attics

3. Unvented Attic Assemblies

Attic ventilation is the traditional way of controlling temperature and moisture in an attic. In an unvented attic (conditioned attic) assembly insulation is applied directly at the roofline of the building, either above or below the structural roof sheathing. The roof system becomes part of the insulated building enclosure. For this case, the thermal boundary of the building results in an unconditioned attic space between the ceiling gypboard and the insulated roof above.

The provisions of CBC, Title 24, Part 2, Vol. 2.5, Section R806.4 describes conditions for insulation placed at the roof of the building as opposed to on top of the horizontal ceiling. Unvented attic assemblies are allowed provided that:

- Air-impermeable insulation is used below and in direct contact with the underside of the roof sheathing, or
- Air-permeable insulation is used below and in direct contact with the underside of the roof sheathing and rigid board or sheet insulation of at least R-4 is used above the roof sheathing, or
- Air-impermeable insulation is used below and in direct contact with the underside of the roof sheathing and an additional layer of air-permeable insulation is installed directly under the air-impermeable insulation.

Check with the local building jurisdiction to determine their specific requirements for unvented attic conditions.

A building that employs an unvented attic with above or below roof deck insulation can attain significant energy credits due to the increased thermal benefits of the insulation R-value, plus the reduction of duct conduction and leakage losses (bringing ducts within the conditioned space). Combining this with the additional design improvement of low air leakage for the rest of the building would achieve significant energy savings and compliance energy credit.

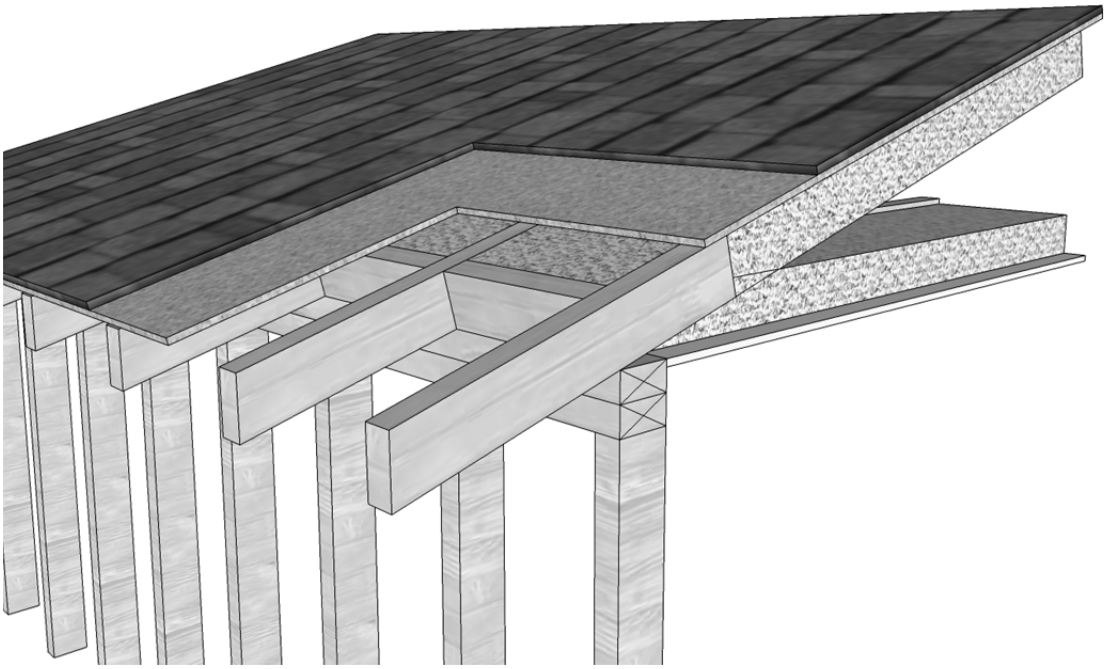

Figure 3-33 – Unvented Attic Assembly

3. Wall Assembly

See Energy Commission videos

More insulation is almost always better than less. Insulation is one of the least expensive measures to improve building energy efficiency. Insulation requires no maintenance, helps improve indoor comfort, and provides excellent sound control. Builders and designers who tout meeting minimum insulation requirements for new buildings are not providing consumers and homeowners with a home of great value. Buildings that comply minimally with the standards represent the worst buildings allowed by code. Adding extra insulation at a later time is much more expensive than simply maximizing insulation levels at the beginning of construction.

a. Batt and Blanket Insulation

Thermal batts of glass fiber, mineral and natural wool, and cotton material are some of the most widely used insulation in the marketplace. They offer ease of installation with R-values set by the manufacturer based on size and thickness. They are available with facings, some as vapor retarders, and have flanges to aid in installation to framed assemblies. They also are available as unfaced material and can be easily friction-fitted into framed cavities. Batt and blanket thermal insulation material have more testing for sound attenuation than any other insulation type. However, in some instances manufacturers of blown or sprayed insulation material may have testing information supporting their product's sound performance for special applications with higher values typically found for thermal batts.

Batt and blanket insulation allow easy inspection and installation errors can readily be identified and remedied, including breeches in the air barrier system that allow air leakage. Nevertheless, care should always be taken to install the insulation properly, filling the entire cavity, and butting ends or sides of the batt material to ensure uniformity of the installation. Batt and blanket insulation material must be split to allow for wiring, plumbing, and other penetrations within the framed cavity area.

b. Blown or Sprayed Insulation

Blown or sprayed wall insulation can be an effective way to deal with the irregularities of wall and ceiling cavities, especially the spaces around pipes, electric cables, junction boxes, and other equipment that is embedded in cavities. There are several commonly used types of insulation that have a blown or sprayed process for its installation, including: cellulose, fiberglass, and spray polyurethane foam (SPF). The R-value of blown or sprayed wall insulation material is determined by the applicator at the site. This differs from manufactured products such as fiberglass or mineral wool batts whose R-value has been tested and arrives at the construction site in preformed lengths with set R-value thicknesses.

Blown or sprayed wall insulation must be thoroughly checked to insure the R-value is achieved. Line of sight down a wall section can deceivingly hide imperfections in the installation leading to underachieving stated R-values. Depressions and voids within the insulated cavity are areas lacking in their R-value performance. Where netting is used, over-spraying can result in a higher installed density (higher R-value) but can be troublesome for attaching gypboard to wall framing. Where cavities have been under-sprayed, there may be voids or “soft” areas under the netting. These areas are often re-sprayed again, or the area is removed of its insulation material and a thermal batt is installed in its place.

Loose Fill Cellulose Insulation

Cellulose is basically paper that has been treated for flame- and insect-resistance. Loose fill cellulose is commonly used in attic applications. For walls, the cellulose material is typically mixed with a water- and starch-based binder. The binder causes the insulation to adhere to itself and stick to the surfaces of the wall cavity. Excess insulation that extends past the wall cavity is scraped off with a special tool and recycled into the insulation hopper with fresh material for further installations. R-value is dependent on the installed density of the material at the building site and the building official should ensure the installed density meets manufacturer specifications. Cellulose insulation that dislodges from the cavity is often re-sprayed again, or the area is removed of cellulose and a thermal batt is installed in its place.

Loose Fill Fiberglass Insulation

Loose fill fiberglass insulation is made up of small glass fibers. The product is similar to lose fill fiberglass that is commonly used in attics, but for walls it can be installed behind a netting fabric or mixed with a water based adhesive. The adhesive causes the insulation to adhere to itself and stick to surfaces of the wall cavity. Excess insulation that extends past the wall cavity is scraped off and recycled. R-value is dependent on the installed density of the material at the building site and the building official should ensure the installed density meets manufacturer specifications.

Spray Polyurethane Foam (SPF)

Spray polyurethane foam insulation is a foamed plastic formed by the combination of chemicals and a blowing agent applied using a spray gun. SPF insulation is spray

applied to fully adhere to the joist and other framing faces to form a complete air seal within the construction cavities. R-value is dependent on the installed thickness and the building official should ensure the thickness and uniformity of the SPF material within each cavity space of framed assemblies meets manufacturer specifications. When installed on the underside of the roof deck and exposed to the attic space below SPF must be separated from the interior of the building by an approved thermal barrier consisting of 1/2-inch (12.7 mm) gypsum wallboard or equivalent thermal barrier material (Section 316.4, CBC).

There are two types of SPF insulation: medium-density closed cell (ccSPF), and light-density open cell (ocSPF) insulation. They have different insulating properties and compliance requirements as described below:

- ccSPF has been assigned a default R-value of 5.8 per inch for compliance purposes and a nominal density of greater than 1.5 to less than 2.5 pounds per cubic foot (pcf). The average thickness of the foam insulation must meet or exceed the required R-value. Depressions in the foam insulation's surface shall not be greater than 1/2-inch of the required thickness at any given point of the surface area being insulated. ccSPF is not required to fill the cavity.
- ocSPF has been assigned a default R-value of 3.6 per inch for compliance purposes and a nominal density of 0.4 to 1.5 pounds per cubic foot (pcf). ocSPF insulation is sprayed then expands to fill the framed cavity. Excess insulation is removed with a special tool. The average thickness of the foam insulation must meet or exceed the required R-value. Depressions in the foam insulation surface shall not be greater than 1 inch of the required thickness provided these depressions do not exceed 10% of the surface area being insulated. ocSPF must fill the cavity of 2x4 framing.

Table 3-10: Required Thickness of SPF Insulation to Achieve Default R-values

Thickness of SPF Insulation	R11	R13	R15	R19	R21	R22	R25	R30	R38
Required thickness of ccSPF Insulation (inches)	2.00	2.25	2.75	3.50	3.75	4.00	4.50	5.25	6.75
Required thickness of ocSPF Insulation (inches)	3.0	3.5	4.2	5.3	5.8	6.1	6.9	8.3	10.6

Alternatively, the total R-value may be calculated based on the thickness of insulation multiplied by the "tested R-value per inch" as listed in the Table of R-values or R-value Chart from the manufacturer's current ICC Evaluation Service Report (ESR) that shows compliance with *Acceptance Criteria for Spray-Applied Foam Plastic Insulation--AC377*. Overall assembly U-factors are determined by selecting the assembly type, framing configuration, and cavity insulation from the appropriate Reference Joint Appendix JA4 table or other approved method specified in Section JA4 of the Reference Appendices.

Air Barrier

- ccSPF installed as an air barrier shall be a minimum of 2.0 inches in thickness; alternatively, ccSPF insulation shall be installed at a thickness that meets an air permeance no greater than 0.02 L/s-m^2 at 75 Pa pressure differential when tested in accordance to ASTM E2178 or ASTM E283.
- ocSPF installed as an air barrier shall be a minimum of 5.5 inches in thickness; alternatively, ocSPF insulation shall be installed at a thickness that meets an air permeance no greater than 0.02 L/s-m^2 at 75 Pa pressure differential when tested in accordance to ASTM E2178 or ASTM E283.

Source: California Energy Commission

Figure 3-34 – Cellulose Insulated Wall

c. Metal Framing

A change from wood framing to metal framing can significantly affect compliance. Metal framed assemblies are often chosen where greater structural integrity is necessary, or in climate conditions where greater durability is desired from the affects of excessive moisture exposure. Metal framed wall construction generally requires a continuous layer of rigid insulation to meet the mandatory minimum wall insulation levels and/or the prescriptive requirements since metal is more conductive than wood. In Reference Joint Appendix JA4, Tables 4.2.4 and 4.2.5 have U-factors for metal-framed ceiling/roof constructions. Table 4.3.4 has U-factors for metal-framed walls. Tables 4.4.4 and 4.4.5 have U-factors for metal-framed floors.

To comply prescriptively, a non-wood framed assembly, such as a metal framed assembly, must have an assembly U-factor that is equal or less than the U-factor of the wood framed assembly for that climate zone. Compliance credit is available through the performance approach for metal framed assemblies that exceed the prescriptive requirements of the equivalent wood framed assemblies.

d. Log Homes

Log homes are an alternative construction type used in some parts of the state. Log home companies promote the aesthetic qualities of solid wood construction and can "package" the logs and deliver them directly to a building site. Some companies provide log wall, roof, and floor systems with special insulating "channels" or other techniques to minimize the effect of air infiltration between log members and to increase the thermal benefit of the logs.

Log walls do not have framing members like conventional wood stud walls. Therefore, the mandatory requirement for a minimum of R-13 wall insulation does not apply.

Otherwise, in prescriptive compliance log walls must meet the same thermal requirements as other construction types. For performance compliance, consult the compliance software vendor’s documentation for any unique modeling requirements

for mass walls using values from Reference Appendices. In prescriptive compliance, the walls will qualify as either light mass or heavy mass walls depending on the thickness – remember a heat capacity (HC) of 8.0 Btu/°F-ft² is equivalent to a heavy mass wall (40 lb/ft³). The prescriptive requirements for heavy mass walls are less stringent than the criteria for wood-framed walls. Reduced insulation is allowed because the effects of the thermal mass (interior and exterior) can compensate for less insulation.

The thermal performance of log walls is shown in Reference Joint Appendix JA4, Table 4.3.11. The U-factor ranges from 0.133 for a 6-inch wall to 0.053 for a 16-inch wall. The U-factor of an 8-inch wall is 0.102, which complies with the R-13 prescriptive requirements. U-factors for other log wall constructions (not shown in Reference Joint Appendix JA4) would have to be approved by the Energy Commission through the exceptional methods process.

Log walls have a heat capacity that is in excess of conventional construction. Reference Joint Appendix JA4 [Table 4.3.11 Thermal Properties of Log Home Walls] shows that a 6-inch wall has an HC of 4.04 which increases to 10.77 for a 16-inch wall. The thermal mass effects of log home construction can be accounted for within the performance approach.

Air infiltration between log walls can be considerably different among manufacturers depending upon the construction technique used. For purposes of compliance, infiltration is always assumed to be equivalent to a wood-frame building. However, the builder should consider using a blower door test to find and seal leaks through the exterior walls.

e. Straw Bale

Straw bale construction is regulated within the CBC and specific guidelines are established for moisture content, bale density, seismic bracing, weather protection, and other structural requirements.

The Energy Commission has determined specific thermal properties for straw bale walls and thermal mass benefits associated with this type of construction. The performance compliance approach can be used to model the heat capacity characteristics of straw bales.

Straw bales that are 23 inch by 16 inch are assumed to have a thermal resistance of R-30, whether stacked so the walls are 23 inch wide or 16 inch wide. The minimum density of load bearing walls is 7.0 lb/ft3, and this value or the actual density may be used for modeling straw bale walls in the performance approach. Specific heat is set to 0.32 Btu/lb-°F. Volumetric heat capacity (used in some computer programs) is calculated as density times specific heat. At a density of 7 lb/ft³, for example, the volumetric heat capacity is 2.24 Btu/ft³-°F.

The minimum dimension of the straw bales when placed in the walls must be 22 inch by 16 inch and there are no restrictions on how the bales are stacked. Due to the higher resistance to heat flow across the grain of the straw, a bale laid on edge with a nominal 16-inch horizontal thickness has the same R-Value (R-30) as a bale laid flat.

f. Structural Insulated Panels (SIPS)

Structural Insulated Panels (SIPS) are a non-framed advanced construction system that consists of rigid insulation (usually expanded polystyrene) sandwiched between two sheets of OSB or plywood. Little or no structural framing penetrates the insulation

layer. Panels are typically manufactured at a factory and shipped to the job site in assemblies that can be as large as 8 ft by 24 ft.

In the field, the SIPS panels are joined in one of three ways: (1) single or double 2x splines, (2) I-joists, or (3) with OSB splines. The choice of these options affects thermal performance and structural capacity. The 2x and I-joist spline types each fit in a recess of the foam core, between the two layers of plywood or OSB. Reference Joint Appendix JA4, Table 4.2.3 contains U-factors for roof/ceiling assemblies, Table 4.3.2 has U-factors for SIPS wall assemblies and Table 4.4.3 has U-factors for SIPS floor constructions. U-factors used for compliance must be taken from these tables, through the EZ-Frame assembly calculator, or by using approved performance compliance software.

Source: California Energy Commission

Figure 3-35 – Methods of Joining SIPS Panels

g. Insulating Concrete Forms (ICF)

Insulating Concrete Forms (ICFs) are a concrete forming system that uses stay-in-place panels made from a variety of insulating materials for constructing cast-in-place solid concrete walls. Three factors contribute to the energy efficiency of buildings using an ICF wall: (1) continuous rigid insulation on both sides of a high-mass core, (2) elimination of thermal bridging from wood framing components, and (3) a high degree of air-tightness inherent to this method of construction.

Climate zones with large daily temperature fluctuations have the greatest potential to benefit from the time lag and temperature dampening effects of these high-mass envelope systems. However, this combination of mass and insulation is beneficial in almost all climates with the possible exception of mild coastal climate zones.

There are three basic types of ICFs: flat wall, waffle-grid and screen-grid. A flat wall ICF results in a wall with a consistent and continuous thickness of concrete. A waffle-grid ICF creates a concrete waffle pattern, an uninterrupted-grid, with some concrete sections thicker than others. A screen-grid ICF consists of a discrete post-and-beam structure with the concrete completely encapsulated by the foam insulation, except at the intersection of posts and beams. The insulating panels for all three ICF types are

most commonly made from expanded polystyrene (EPS) and extruded polystyrene (XPS) rigid insulation boards. Insulating panels are also made from polyurethane, composites of cement and EPS, and composites of cement and shredded wood fiber, although these tend to be proprietary materials developed by the ICF manufacturer.

Plastic or metal cross-ties, consisting of two flanges and a web, separate the insulating panels and provide structural integrity during the concrete pour resulting in a uniform wall thickness. A variety of wall thicknesses can be obtained by changing the length of the web. The area of attachment of the cross-ties to the insulating form provides a secure connection surface located at standard spacings for mechanical attachment of finish materials to the interior and exterior of the wall. ICFs can be used to construct load-bearing and non-load bearing walls, above- and below-grade walls, and can be designed to structurally perform in any seismic zone.

The ICF system is modular and stackable with interlocking edges. The materials can be delivered as pre-assembled blocks or as planks that require the flanges and web to be assembled during construction. The forms vary in height from 12” - 24” and are either 4’ or 8’ long. Vertical panels come in similar modules, but are stacked vertically. ICF panels are typically available with core thickness ranging from 4” to 12”.

The thermal aspects of ICFs are represented in the Reference Joint Appendix JA4, Table 4.3.13.

h. Advanced Wall System (AWS)

Advanced Wall Systems (AWS), also known as Optimum Value Engineering (OVE), refers to a set of framing techniques and practices that minimize the amount of wood and labor necessary to build a structurally sound, safe and durable, energy efficient building. AWS improves energy and resource efficiency while reducing first costs.

Reducing the amount of wood in wood framed exterior walls improves energy efficiency, allowing more insulation to be installed, and has greater resource efficiency for the materials being used. In addition, fewer framing studs reduces the effects of “thermal bridging” and increases the amount of insulation in the wall, resulting in a more energy efficient building envelope. The framing factor assumed for calculating the energy performance of a wood framed 2x4 wall at 16”oc is 25%. When AWS is used the framing factor is reduced to 17%, reflecting the improved energy performance of the wall system.

While AWS represents a range of practices, it must be adequately inspected to ensure framing contractors have adhered to all best practice construction throughout the exterior envelope. Examples of construction practices for AWSs that should be followed and that can be used as a general guide for enforcement are provided below:

a. Use at a minimum 2x6 at 24” on-center wall framing
b. Use precise engineering of headers on load-bearing walls
c. Install 2x4, 2x6, or I-joist headers on exterior non-load-bearing walls

Eliminate cripple studs at window and door openings less than 4 feet in width

d. Align window/door openings with standard stud spacing
e. The king stud, on at least one side of the window/door opening, must take the place of an on-layout AWS stud
f. Use two-stud corners instead of 3-stud corners

i. Nailing for interior gypsum board can be accomplished with drywall clips, 1x nailer strip, recycled plastic nailing strip. Drywall clips reduce the potential for drywall cracking
g. Ladder block where interior partitions intersect exterior walls, instead of 3-stud channels
h. Eliminate unnecessary double floor joists underneath non-bearing walls
i. Use metal let-in T-bracing or other methods on non-shear walls to allow full insulation
j. Include detailed framing plans and elevations on the construction permit plan set
k. Optimize house design for efficient material use (e.g. reducing header spans, designing exterior surfaces in two foot modules, designing clear spans to eliminate interior bearing walls)
l. Build with “insulated headers” (a “sandwich” of two solid or engineered lumber components with a layer of foam insulation in the middle or on one or both sides of the header)
m. Use engineered lumber. Examples include: “I”-joists, open web floor trusses; 2x “raised heel” roof trusses, glulam beams, laminated veneer lumber (LVL), laminated strand lumber (LSL), parallel strand lumber (PSL), oriented strand board (OSB)
n. Eliminate trimmers at window and door opening headers less than 4 feet in width, only when rated hangers are utilized and noted on the plans.
o. Use 2x4 or 2x3 interior non-load-bearing walls
p. Integrate framing design with HVAC system
q. Use “inset” shear wall panels

The graphic below is a description of a typical AWS and the assembly characteristics that are used in the prescriptive and performance compliance approaches to support it use. But note, the building official must ensure during the framing inspection that all elements of AWS have been met.

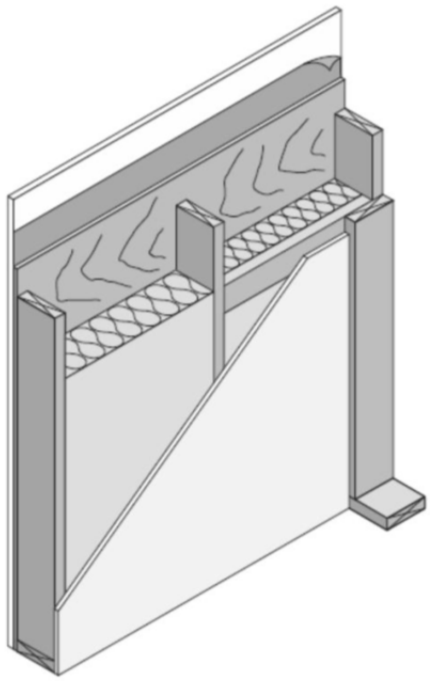

Figure 3-36 – Wood Framed Wall, 2x6 @ 24" oc, AWF with 2-stud corners

Table 3-11 – Assumptions

Layer	**Assembly Type: Wall 2x6 @ 24" oc AWS**	**R-Value**	
	Framing Material: Wood	Framing Factor	17
	Assembly Components	**Cavity (R_c)**	**Frame (R_f)**
1	Outside air film	0.17	0.17
2	7/8 inch 3-coat stucco	0.18	0.18
3	3/8 inch sheathing	0.47	0.47
4	R-21 insulation	21	--
5	2x6 doug fir framing @ R-1.086/inch	--	5.973
6	½ inch gypboard	0.45	0.45
7	Inside air film	0.68	0.68
	Subtotal	23.01	7.983
	$[1/R_c$ x (1-Frame% / 100)] + $[(1/R_f)]$ x (Frame% / 100)] = Assembly U-factor	**Assembly U-factor**	**0.057**

Assumptions: Values in Table 3-11 were calculated using the parallel heat flow calculation method, documented in the 2009 ASHRAE Handbook of Fundamentals. The construction assembly assumes an exterior air film of R-0.17, a 7/8 inch layer of stucco of R-0.18 (SC01), building paper of R-0.06 (BP01), a sheathing or continuous insulation layer if present, the cavity insulation / framing layer, ½ inch gypsum board of R-0.45 (GP01), and an interior air

film 0.68. The framing factor is assumed to be 25 percent for 16 inch stud spacing, 22 percent for 24 inch spacing, and 17 percent for Advanced Wall System (AWS).
Actual cavity depth is 3.5 inch for 2x4, 5.5 inch for 2x6. The thickness of the stucco is assumed to be reduced to 3/8 inch (R-0.08) when continuous insulation is applied.

i. Double and Staggered Wall Assemblies

Double wall and staggered wall systems were developed to better accommodate electrical and plumbing systems, allow higher levels of insulation, and provide greater sound attenuation. The advantages of these types of wall systems are that:

- Smaller dimensional lumber can be used
- Easier to install installation properly
- Eliminates thermal bridging through the framing
- Reduces sound transmission through the wall

With double walls, insulation may be on one side of the wall or on both (higher R-values). It is not uncommon to find double walls with insulation installed within the outside wall cavities, leaving the inside wall sections open for wiring and plumbing purposes.

With staggered walls, thermal batt insulation may be installed horizontally or vertically, butting the sides of the insulation until the cavity across the entire wall section is completely filled.

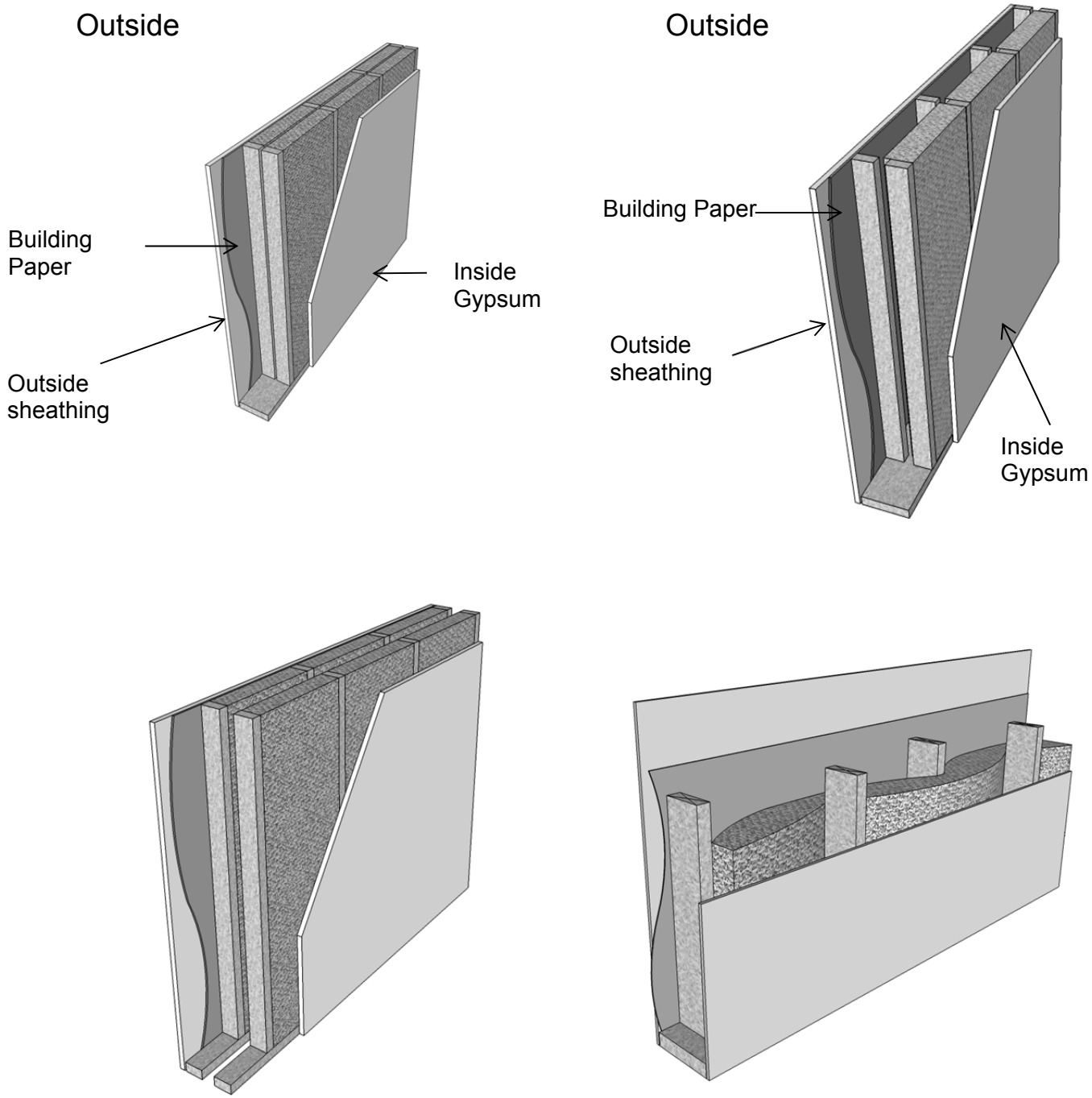

Figure 3-37 – Typical Double and Staggered Wall Systems

4. Floor Assembly

a. Controlled Ventilation Crawlspace (CVC)

CVC Eligibility Criteria in 2013 Reference Appendices, Residential Appendix RA4.5.1

Buildings having crawlspace foundations must meet mandatory and prescriptive requirements for insulation of a raised floor separating the unconditioned crawlspace from conditioned space above (§150.0(d) and §150.1(c)1C). An alternative to under floor insulation is insulating the stem wall of the foundation crawlspace. Insulating the crawlspace foundation can improve the thermal efficiency of the floor system by:

- Reducing heat transfer into the unconditioned crawlspace,
- Reducing moisture buildup in the crawlspace, and
- Minimizing insulation exposed to adverse weather prior to enclosure of the building shell

An energy credit can be taken in performance compliance software for Controlled Ventilation Crawlspace (CVC). This credit requires insulating the foundation stem wall, the use of automatically controlled crawlspace vents, and vapor retarder covering the entire ground soil area for moisture control on the crawlspace floor (see Section 3.3. V, Vapor Retarder).

1.

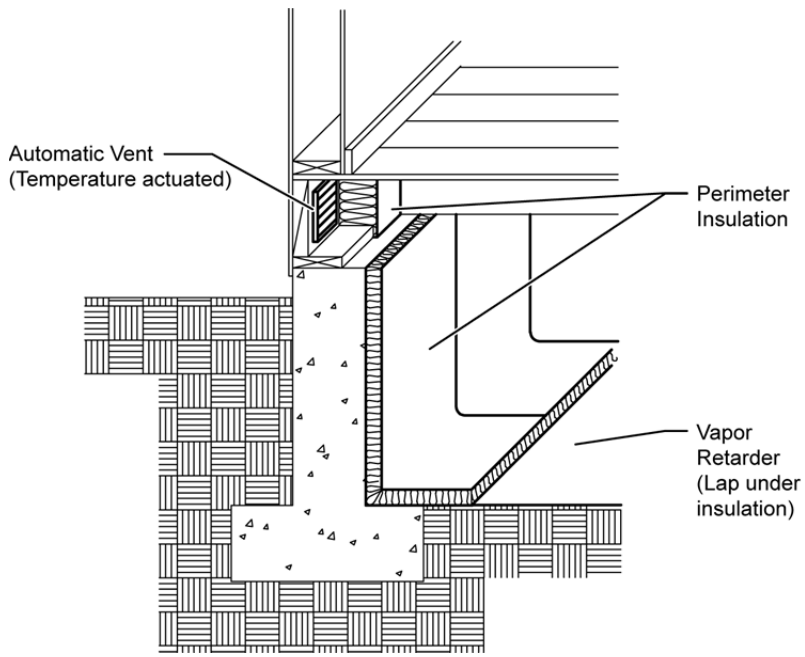

Figure 3-38 2– Controlled Ventilation Crawl Space

All building designs should ensure that proper site engineering and drainage away from the building is maintained, this includes landscaping techniques that emphasize sound water management strategies.

- Drainage: Crawlspace buildings in particular are susceptible to moisture ponding when good drainage and/or moisture removal designs are not employed.
- **Ground water and soils:** Local ground water tables at maximum winter recharge elevation should be below the lowest excavated elevation of the site foundation. Sites that are well drained and that do not have surface water problems are generally good candidates for this stem wall insulation strategy. However, allowance for this alternative insulating technique is entirely at the building officials' discretion. The building permit applicant should be prepared to provide supporting information that

site drainage strategies (e.g., perimeter drainage techniques) will prevent potential moisture concerns.

The following eligibility criteria (see Reference Appendices, Residential Appendix RA4.5.1) are required in order to use the CVC energy credit:

1. **Ventilation:** All crawlspace vents must have automatic vent dampers. Automatic vent dampers must be shown on the building plans and installed. Dampers shall be temperature actuated to be fully closed at approximately 40°F and fully open at approximately 70°F. Cross-ventilation consisting of the required vent area shall be distributed between opposing foundation walls.
2. **Insulation:** The R-value of insulation placed on the foundation stem wall shall be equal to or greater than the wall insulation above the raised floor. Stem wall insulation shall run vertically along the stem wall and horizontally across the crawlspace floor for a distance of 2 feet (24 inches).
    a. Direct Earth Contact—Foam plastic insulation used for crawlspace insulation having direct earth contact shall be a closed cell water resistant material and meet the slab edge insulation requirements for water absorption and water vapor transmission rate specified in the mandatory requirements (§110.8(g)1).

A Class I or Class II vapor retarder must be placed over the earth floor of the crawl space to reduce moisture entry and protect insulation from condensation in accordance with Reference Residential Appendix RA4.5.2. This requires essentially a polyethylene type ground cover having a minimum 6 mil thickness (0.006 inch) or approved equal. The vapor retarder must be overlapped a minimum of 6 inches at joints and shall extend over the top of footings and piers. All overlapping of joints shall be sealed with tape, caulk or mastic.

Penetrations, tears and holes in the vapor barrier shall be sealed with tape, caulk or mastic.

The vapor retarder shall be Class I or Class II and rated as 1.0 perm or less.

Edges of the vapor retarder shall be turned up a minimum of 4 inches at the stem wall and securely fastened before insulation is installed.

In sloping crawlspace ground soil areas, the vapor retarder shall be securely held in place, such as spiked with 5 inch gutter nails then have proper sealing of penetration holes.

The vapor retarder shall be shown on the plans.

b. **Other Assemblies**

1. Thermal Mass

Thermal mass consists of exposed tile floors over concrete, mass walls such as stone or brick, and other heavy elements within the building envelope that serve to stabilize indoor temperatures. Thermal mass helps temper interior temperature, storing heat or cooling for use at a later time. In California's central valley and desert climates, the summer temperature range between night and day can be 30°F or more and thermal mass can be an effective strategy to reduce daytime cooling loads.

When thermal mass exists in exterior walls, it works to stabilize temperatures in two ways. First, there is a time delay between when the outside temperature of the wall reaches its peak and when the inside of the wall reaches its peak. For an 8-inch to 12-inch concrete wall, this time delay is on the order of 6 to 10 hours. Second, there is a dampening effect whereby the temperature range on the inside of the house is less than the temperature range on the outside of the house. These effects are illustrated in the following figure.

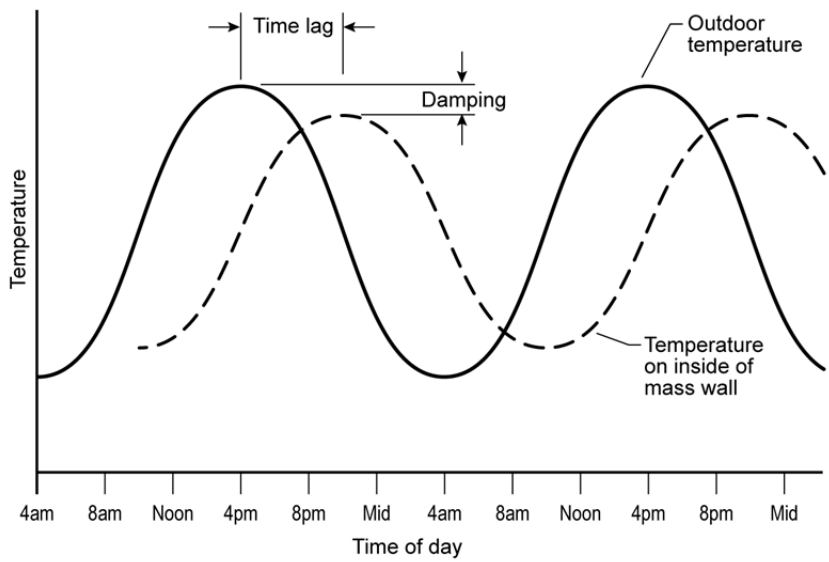

Figure 3-39 – Thermal Mass Performance

When the performance method is used, credit is offered for increasing thermal mass in buildings. However, credit for thermal mass in the proposed design may be considered only when the proposed design qualifies as a high mass building. A high mass building is one with thermal mass equivalent to having 30 percent of the conditioned slab floor exposed and 15 percent of the conditioned non-slab floor exposed with the equivalent of 2 inch-(50 mm) thick concrete. This procedure is automated in Energy Commission approved computer.

3.8 Compliance and Enforcement

For buildings for which the Certificate of Compliance (CF1R) requires HERS field verification for compliance with the standards, a HERS rater must visit the site to perform field verification and diagnostic testing, to complete the applicable Envelope portions of a Certificate of Field Verification and Diagnostic Testing (CF3R).

A. The following measures require field verification and diagnostic testing if they are used in the proposed design for compliance, and are listed on the CF1R as special features requiring HERS rater verification:

Building Envelope Sealing

Quality Insulation Installation (QII)

Field verification is necessary only when credit is taken for the measure. For example, Building Envelope Sealing need only be HERS verified if Building Envelope Sealing was used to achieve credit in the proposed design.

Registration of the CF3R is required. The HERS rater must submit the CF3R information to the HERS provider data registry as described in Chapter 2. For additional detail describing HERS verification and the registration procedure, refer to Reference Residential Appendix RA2.

Design

The initial compliance documentation consists of the Certificate of Compliance (CF1R). With the 2008 update, MF-1R is no longer a checklist, but a statement of the mandatory features to be included with the CF1R forms. The mandatory features are also included in the CF2R forms. The CF1R must be filed on the plans and specifications. Included on the CF1R is a section where special envelope features are listed. The following are envelope features that should be listed in this section if they exist in the proposed design:

- Inter-zone ventilation
- Radiant barriers
- Multiple Orientation
- Controlled ventilation crawlspace
- Non-standard ventilation height differences
- Standard free ventilation area greater than 10 percent of the window area
- Metal-framed walls
- Sunspace with interzone surfaces
- Roofing products (Cool roof)
- Air retarding wrap

Plan checkers should verify that insulation levels, fenestration U-factors, and SHGCs listed on the CF1R are consistent with the plans and specifications.

If registration of the CF1R is required (see Chapter 2 for requirements), the building owner, or the person responsible for the design must submit the CF1R to the HERS provider data registry for retention following the procedures described in Chapter 2 and in Reference Residential Appendix RA2.

Construction

During the construction process, the contractor and/or the sub-contractors complete the necessary sections of the Certificate of Installation (CF2R):

Fenestration/Glazing. The glazing contractor lists all the fenestration products that are installed in the building along with the model number, the manufacturer number, the U-factor and the SHGC. Ensure dynamic glazing controls are functional with Energy Management Systems or similar.

Building Envelope Leakage Diagnostics. This is applicable only if the builder/contractor does blower door testing to reduce building envelope leakage.

Insulation Installation Quality Certificate. The insulation contractor documents the insulation installation quality features that have been followed as shown on the CF2R checklist.

Description of Insulation. The insulation contractor documents the insulation materials installed in the walls, roofs, and floors along with the brand name of the materials and the thermal resistance.

The building official (field inspector) will visit the site multiple times during the construction process. The purpose of these visits is to verify that the equipment and materials installed are consistent with the plans and specifications.

If registration of the CF2R is required, the licensed person responsible for the installation must submit the portion of the CF2R information that applies to the installation to a HERS provider data registry using procedures described in Chapter 2 and in Reference Residential Appendix RA2.

3.9 Glossary/References

The Reference Joint Appendices JA1 contains a glossary of terms. The following terms either expand on those listed in the Reference Appendices or are provided here to better clarify compliance issues for the building envelope.

Fenestration Terminology

A. General Terms

The following terms are used in describing fenestration products.

- Center of Glass U-factor, Solar Heat Gain Coefficient (SHGC) and Visible Transmittance (VT). The U-factor, SHGC and VT are measured only through glass at least 2.5 inches from the edge of the glass or dividers.
- Clear.glass: Little if any observable tint. An IG unit with an SHGC of 0.5 or greater.

Divider (Muntin). An element that actually or visually divides different lites of glass. It may be a true divided lite, between the panes, and/or applied to the exterior or interior of the glazing.

Dynamic Glazing is glazing systems that have the ability to reversibly change their performance properties, including U-factor, Solar Heat Gain Coefficient (SHGC), and/or Visible Transmittance (VT) between well-defined end points.

Chromogenic is a class of switchable glazing which includes active materials (e.g. electrochromic) and passive materials (e.g. photochromic and thermochromic) permanently integrated into the glazing assembly.

Integrated shading systems is a class of fenestration products including an active layer: e.g. shades, louvers, blinds or other materials permanently integrated between two or more glazing layers.

Fixed glass: The fenestration product cannot be opened.

Gap Width. The distance between glazings in multi-glazed systems (e.g., double-or triple-glazing). This dimension is measured from inside surface to inside surface. Some manufacturers may report "overall" IG unit thickness which is measured from outside surface to outside surface.

Grille. See Divider.

IG Unit. Insulating glass unit. An IG unit includes the glazings, spacer(s), films (if any), gas infills, and edge caulking.

Hard Coat. A pyrolytic low-e coating that is generally more durable but less effective than a soft coat. See separate glossary term for low-e coating.

Light or Lite. A layer of glazing material, especially in a multi-layered IG unit. Referred to as panes in §110.6 when the lites are separated by a spacer from inside to outside of the fenestration.

Low-e Coating. A transparent or semitransparent metallic coating applied to glazing that reduces the emittance of the surface and that usually affects the solar heat gain of the glass. Low-e stands for low-emissivity. The coating (or film) is generally between glazings in double-pane or triple-pane fenestration products.

Mullion. A frame member that is used to join two individual windows into one fenestration unit.

Muntin. See Dividers.

Nonmetal Frame. Includes vinyl, wood, or fiberglass. Vinyl is a polyvinyl chloride (PVC) compound used for frame and divider elements with a significantly lower conductivity than metal and a similar conductivity to wood. Fiberglass has similar thermal characteristics. Non-metal frames may have metal strengthening bars entirely inside the frame extrusions or metal-cladding only on the surface.

Operable. The fenestration product can be opened for ventilation.

Soft Coat. A low-e coating applied through a sputter process. See separate glossary term for low-e coating.

Spacer or Gap Space. A material that separates multiple panes of glass in an insulating glass unit.

Thermal Break Frame. Includes metal frames that are not solid metal from the inside to the outside, but are separated in the middle by a material, usually vinyl or urethane, with a significantly lower conductivity.

Tinted. Darker gray, brown or green visible tint. Also, low-e or IG unit with an SHGC less than 0.5.

Visible Transmittance(VT). The ratio of visible light transmitted through the fenestration. The higher the VT rating, the more light is allowed through a window.

Window Film are composed of a polyester substrate to which a special scratch resistant coating is applied on one side, with a mounting adhesive layer and protective release liner applied to the other side.

B. Low-e Coatings

Low-emissivity coatings are special coatings applied to the second or third surfaces in double-glazed windows or skylights. As the name implies the surface has a low emittance. This means that radiation from that surface to the surface it “looks at” is reduced. Since radiation transfer from the hot side of the window to the cool side of the window is a major component of heat transfer in glazing, low-e coatings are very

effective in reducing the U-factor. They do nothing, however, to reduce losses through the frame.

In the residential market, there are two kinds of low-e coatings: low solar gain and high solar gain. Low-solar gain low-e coatings are formulated to reduce air conditioning loads. Fenestration products with low solar gain low-e coatings typically have an SHGC of 0.40 or less. Low-solar gain low-e coatings are sometimes called spectrally selective coatings because they filter much of the infrared and ultra-violet portions of the sun's radiation while allowing visible light to pass through. High solar gain low-e coatings, by contrast, are formulated to maximize solar gains. Such coatings would be preferable in passive solar applications or where is little air conditioning.

Another advantage of low-e coatings, especially low solar gain low-e coatings, is that when they filter the sun's energy, they generally remove between 80 percent and 85 percent of the ultraviolet light that would otherwise pass through the window and damage fabrics and other interior furnishings. This is a major advantage for homeowners and can be a selling point for builders.

C. National Fenestration Rating Council

The National Fenestration Rating Council (NFRC) is the entity recognized by the Energy Commission to supervise the rating and labeling of fenestration products. NFRC list the Certified Product Directory, containing NFRC certified U-factors and SHGC values for thousands of residential fenestration products see http://www.nfrc.org

Fenestration product performance data used in compliance calculations must be provided through the NFRC rating program and must be labeled by the manufacturer with the rated U-factor and SHGC in accordance with §10-111 procedures.

D. R-value

R-value is a measure of a material's thermal resistance, expressed in $ft^2(hr)°F/Btu$. R-value is the inverse of U-factor. A higher R-value and lower U-factor indicate higher energy efficiency.

The rated R-value of fiberglass (batt) insulation is based upon its fully expanded thickness and may be obtained from the Reference Joint Appendices JA4, Table 4.6.2 or from the manufacturer's literature. When the insulation is compressed, the R-value is reduced. The most common insulation compression occurs with R-19 and R-22 insulation batts installed in locations with a nominal 6-inch framing that is actually only 5.5 in. thick. To achieve its rated insulation value, an R-19 batt of insulation expands to a thickness of six and one quarter inches. If it is compressed into 2x6 framing with an actual depth of 5.5 inches, the insulation R-Value is lowered to 17.8.

E. Solar Heat Gain Coefficient

Solar heat gain coefficient (SHGC) is a measure of the relative amount of heat gain from sunlight that passes through a fenestration product. SHGC is a number between zero and one that represents the ratio of solar heat that passes through the fenestration product to the total solar heat that is incident on the outside of the window. A low SHGC number (closer to 0) means that the fenestration product keeps out most solar heat. A higher SHGC number (closer to 1) means that the fenestration product lets in most of the solar heat.

SHGCc is the SHGC for the center of glazing area; SHGC or SHGCt is the SHGC for the total fenestration product and is the value used for compliance with the Standards.

F. U-factor of Fenestration Products

U-factor is a measure of how much heat passes through a construction assembly or a fenestration product. The lower the U-factor, the more energy efficient the product is. The units for U-factor are Btu of heat loss each hour per ft² of window area per degree °F of temperature difference (Btu/hr-ft²-°F). U-factor is the inverse of R-value.

The U-factor considers the entire product, including losses through the center of glass, at the edge of glass where a metal spacer typically separates the double-glazing panes, losses through the frame, and through the mullions. For metal-framed windows, the frame losses can be significant.

U-factorc is the U-factor for the center of glazing area; U-factort is the U-factor for the total fenestration product and is the value used for compliance with the Building Energy Efficiency Standards.

Estimating the rate of heat transfer through a fenestration product is complicated by the variety of frame configurations for operable windows, the different combinations of materials used for sashes and frames, and the difference in sizes available in various applications. The NFRC rating system makes the differences uniform, so that an entire fenestration product line is assumed to have only one typical size. The NFRC rated U-factor may be obtained from a directory of certified fenestration products, directly from a manufacturer's listing in product literature, or from the product label.

G. Fenestration Terminology

The following terms are used in describing fenestration products.

Center of Glass U-factor, Solar Heat Gain Coefficient (SHGC) and Visible Transmittance (VT). The U-factor, SHGC and VT are measured only through glass at least 2.5 inches from the edge of the glass or dividers.

Clear. Little if any observable tint. An IG unit with an SHGC of 0.5 or greater.

Divider (Muntin). An element that actually or visually divides different lites of glass. It may be a true divided lite, between the panes, and/or applied to the exterior or interior of the glazing.

Dynamic Glazing:

- Includes active materials (e.g. electrochromic) and passive materials (e.g. photochromic and thermochromic) permanently integrated into the glazing assembly. Electro-chromatic glass that darkens by demand or lightens up when more free daylight or solar heat is desired? Improved glasses decreases the Solar Heat Gain Coefficient (SHGC) in the summer and reduces heat loss in the winter and are glazing systems that have the ability to reversibly change their performance properties, including U-factor, Solar Heat Gain Coefficient (SHGC), and/or Visible Transmittance (VT) between well-defined end points.
- Integrated shading systems is a class of fenestration products including an active layer: e.g. shades, louvers, blinds or other materials permanently

integrated between two or more glazing layers and that has the ability to reversibly change their performance properties, including U-factor, Solar Heat Gain Coefficient (SHGC), and/or Visible Transmittance (VT) between well-defined end points.

-

Fixed. The fenestration product cannot be opened.

Gap Width. The distance between glazings in multi-glazed systems (e.g., double-or triple-glazing). This dimension is measured from inside surface to inside surface. Some manufacturers may report "overall" IG unit thickness which is measured from outside surface to outside surface.

Grille. See Divider.

IG Unit. Insulating glass unit. An IG unit includes the glazings, spacer(s), films (if any), gas infills, and edge caulking.

Hard Coat. A pyrolytic low-e coating that is generally more durable but less effective than a soft coat. See separate glossary term for low-e coating.

Light or Lite. A layer of glazing material, especially in a multi-layered IG unit. Referred to as panes in §116 when the lites are separated by a spacer from inside to outside of the fenestration.

Low-e Coating. A transparent or semitransparent metallic coating applied to glazing that reduces the emittance of the surface and that usually affects the solar heat gain of the glass. Low-e stands for low-emissivity. The coating (or film) is generally between glazings in double-pane or triple-pane fenestration products.

Mullion. A frame member that is used to join two individual windows into one fenestration unit.

Muntin. See Dividers.

Nonmetal Frame. Includes vinyl, wood, or fiberglass. Vinyl is a polyvinyl chloride (PVC) compound used for frame and divider elements with a significantly lower conductivity than metal and a similar conductivity to wood. Fiberglass has similar thermal characteristics. Non-metal frames may have metal strengthening bars entirely inside the frame extrusions or metal-cladding only on the surface.

Operable. The fenestration product can be opened for ventilation.

Soft Coat. A low-e coating applied through a sputter process. See separate glossary term for low-e coating.

Spacer or Gap Space. A material that separates multiple panes of glass in an insulating glass unit.

Thermal Break Frame. Includes metal frames that are not solid metal from the inside to the outside, but are separated in the middle by a material, usually vinyl or urethane, with a significantly lower conductivity.

Tinted. Darker gray, brown or green visible tint. Also, low-e or IG unit with an SHGC less than 0.5.

Visible Transmittance(VT). The ratio of visible light transmitted through the fenestration. The higher the VT rating, the more light is allowed through a window.

Window Film are composed of a polyester substrate to which a special scratch resistant coating is applied on one side, with a mounting adhesive layer and protective release liner applied to the other side.

H. Low-e Coatings

Low-emissivity coatings are special coatings applied to the second or third surfaces in double-glazed windows or skylights. As the name implies the surface has a low emittance. This means that radiation from that surface to the surface it "looks at" is reduced. Since radiation transfer from the hot side of the window to the cool side of the window is a major component of heat transfer in glazing, low-e coatings are very effective in reducing the U-factor. They do nothing, however, to reduce losses through the frame.

In the residential market, there are two kinds of low-e coatings: low solar gain and high solar gain. Low-solar gain low-e coatings are formulated to reduce air conditioning loads. Fenestration products with low solar gain low-e coatings typically have an SHGC of 0.40 or less. Low-solar gain low-e coatings are sometimes called spectrally selective coatings because they filter much of the infrared and ultra-violet portions of the sun's radiation while allowing visible light to pass through. High solar gain low-e coatings, by contrast, are formulated to maximize solar gains. Such coatings would be preferable in passive solar applications or where is little air conditioning.

Another advantage of low-e coatings, especially low solar gain low-e coatings, is that when they filter the sun's energy, they generally remove between 80 percent and 85 percent of the ultraviolet light that would otherwise pass through the window and damage fabrics and other interior furnishings. This is a major advantage for homeowners and can be a selling point for builders.

I. National Fenestration Rating Council

The National Fenestration Rating Council (NFRC) is the entity recognized by the Energy Commission to supervise the rating and labeling of fenestration products. NFRC list the Certified Product Directory, containing NFRC certified U-factors and SHGC values for thousands of residential fenestration products see http://www.nfrc.org

Fenestration product performance data used in compliance calculations must be provided through the NFRC rating program and must be labeled by the manufacturer with the rated U-factor and SHGC in accordance with §10-111 procedures.

J. R-value

R-value is a measure of a material's thermal resistance, expressed in ft²(hr)°F/Btu. R-value is the inverse of U-factor. A higher R-value and lower U-factor indicate higher energy efficiency.

The rated R-value of fiberglass (batt) insulation is based upon its fully expanded thickness and may be obtained from the Reference Joint Appendices JA4, Table 4.6.2 or from the manufacturer's literature. When the insulation is compressed, the R-value is reduced. The most common insulation compression occurs with R-19 and R-22 insulation batts installed in locations with a nominal 6-inch framing that is actually only 5.5 in. thick. To achieve its rated insulation value, an R-19 batt of insulation expands to a thickness of six and one quarter inches. If it is compressed into 2x6 framing with an actual depth of 5.5 inches, the insulation R-Value is lowered to 17.8.

K. Solar Heat Gain Coefficient

Solar heat gain coefficient (SHGC) is a measure of the relative amount of heat gain from sunlight that passes through a fenestration product. SHGC is a number between zero and one that represents the ratio of solar heat that passes through the fenestration product to the total solar heat that is incident on the outside of the window. A low SHGC number (closer to 0) means that the fenestration product keeps out most solar heat. A higher SHGC number (closer to 1) means that the fenestration product lets in most of the solar heat.

SHGCc is the SHGC for the center of glazing area; SHGC or SHGCt is the SHGC for the total fenestration product and is the value used for compliance with the Standards.

L. U-factor of Fenestration Products

U-factor is a measure of how much heat passes through a construction assembly or a fenestration product. The lower the U-factor, the more energy efficient the product is. The units for U-factor are Btu of heat loss each hour per ft² of window area per degree °F of temperature difference (Btu/hr-ft²-°F). U-factor is the inverse of R-value.

The U-factor considers the entire product, including losses through the center of glass, at the edge of glass where a metal spacer typically separates the double-glazing panes, losses through the frame, and through the mullions. For metal-framed windows, the frame losses can be significant.

U-factor is the U-factor for the center of glazing area; U-factor is the U-factor for the total fenestration product and is the value used for compliance with the Building Energy Efficiency Standards.

Estimating the rate of heat transfer through a fenestration product is complicated by the variety of frame configurations for operable windows, the different combinations of materials used for sashes and frames, and the difference in sizes available in various applications. The NFRC rating system makes the differences uniform, so that an entire fenestration product line is assumed to have only one typical size. The NFRC rated U-factor may be obtained from a directory of certified fenestration products, directly from a manufacturer's listing in product literature, or from the product label.

M. Building Orientation

Orientation of the building, particularly walls and fenestration, can impact its energy use. Orientation is also critical for sizing and installing renewable energy sources, such as solar thermal collectors for domestic water heating, and solar electric collectors to help offset electrical demand.

A. East-Facing

"East-facing is oriented to within 45 degrees of true east, including 45°0'0" south of east (SE), but excluding 45°0'0" north of east (NE)." [§100.1]

The designation “East-Facing” is also used in production buildings using orientation restrictions (e.g., Shaded Areas: East-Facing).

B. North-Facing

"North-facing is oriented to within 45 degrees of true north, including 45°0'0" east of north (NE), but excluding 45°0'0" west of north (NW)." [§100.1]

C. South-Facing

"South-facing is oriented to within 45 degrees of true south, including 45°0'0" west of south (SW), but excluding 45°0'0" east of south (SE)." [§100.1]

The designation “South-Facing” is also used in production buildings using orientation restrictions (e.g., Shaded Areas: East-Facing).

D. West-Facing

"West-facing is oriented to within 45 degrees of true west, including 45°0'0" due north of west (NW) but excluding 45°0'0" south of west (SW)." [§100.1]

The designation “West-Facing” is also used in production buildings using orientation restrictions (e.g., Shaded Areas: West-Facing).

4. Building HVAC Requirements

4.1 Overview

4.1.1 Introduction and Organization

This chapter addresses the requirements for heating, ventilating, and air conditioning (HVAC) systems. The requirements are presented in this chapter so that it may serve as a single source of information for mechanical system designers and mechanical system installers, as well as energy consultants, HERS raters and enforcement personnel.

Each section in this chapter outlines the mandatory measures and when applicable, the prescriptive requirements or compliance options. These prescriptive requirements vary by climate zone. When the building design does not achieve the minimum prescriptive requirements, then the compliance options may be used under the performance approach to achieve compliance.

The chapter is organized under the following sections:

1. Heating Equipment. This section addresses the requirements for heating equipment, including mandatory measures, prescriptive requirements, and compliance options.
2. Cooling Equipment. This section addresses cooling equipment requirements, including mandatory measures, prescriptive requirements, and compliance options.
3. Air Distribution System Ducts, Plenums. This section covers mandatory requirements such as duct insulation, duct system construction practices and duct diagnostic testing. This section also covers prescriptive specifications for access holes in the supply and return plenums to accommodate pressure and temperature measurements by installers and HERS raters.
4. Controls. This section addresses mandatory requirements for thermostats and the compliance option for zonal controls.
5. Indoor Air Quality and Mechanical Ventilation. This section covers mandatory requirements for indoor air quality including mechanical ventilation.
6. Alternative Systems. This section covers a number of systems that are less common in California homes, including hydronic heating, radiant floor systems, evaporative cooling, gas cooling, ground-source heat pumps, and wood space heating.
7. Compliance and Enforcement. In this section the documentation requirements at each phase of the project are highlighted.
8. Refrigerant Charge . More information on the refrigerant charge verification procedures is included in this section.

Chapter 9 covers the heating and cooling requirements for additions to existing dwellings and for alterations to existing heating and cooling systems.

4.1.2 What's New for the 2013 Standards

The following is a summary of the new HVAC measures for the 2013 Standards, including new compliance options that provide greater flexibility in complying with the Standards when using the performance method. See individual sections of this Manual for more detail.

Mandatory Features and Devices - Section 150.0

1. The indoor design temperature for heating load calculations has been changed from 70 degrees to 68 degrees. [150.0(h)2]
2. Air conditioning condensers are required to be located at least 5 feet from a clothes dryer vent outlet. [150.0(h)3]
3. Gas furnaces must be designed and installed to meet the manufacturer's maximum temperature split in heating mode. [150.0(h)4]
4. There are some changes to the tables specifying mandatory minimum insulation on air conditioning refrigerant lines. [150.0(j)2C]
5. There are some changes to the mandatory insulation protection for insulated pipes found outside conditioned space. [150.0(j)3B]
6. There is a new reference to a mandatory duct construction standard, ANSI/SMACNA-006-2006 HVAC Duct Construction Standard. [150.0(m)1]
7. The mandatory minimum duct insulation R-value has been raised from R-4.2 to R-6, except for ducts located completely within directly conditioned space. [150.0(m)1]
8. Duct sealing and field verification is now a mandatory measure (moved from the prescriptive packages) and can no longer be traded off by using the performance approach. [150.0(m)11]
9. There are some changes to the target leakage rates for dwellings in multi-family buildings. [150.0(m)11]
10. There are new mandatory requirements for filtration of all air passing through a ducted space conditioning system. The requirements affect the design, efficiency, pressure drop and labeling of the filtration devices. [150.0(m)12]
11. There are new mandatory requirements to ensure proper duct and filter grill sizing for forced air distribution systems that supply cooling to an occupiable space. They include requirements for a hole for a static pressure probe (HSPP) and an option to either size return ducts based on prescriptive tables or field testing to meet airflow and fan watt requirements. [150.0(m)13]
12. There are some new mandatory requirements for space cooling systems that utilize automatic zonal control to meet airflow and fan watt draw requirements. [150.0(m)15]

13. The mandatory whole building ventilation requirement of ASHRAE 62.2 is now a HERS verified measure. [150.0(o)]

Prescriptive and Performance Compliance Approaches - Section150.1

1. When higher than minimum SEER ratings are specified using the performance approach, installation of proper equipment is now a HERS verified measure. Previously this only applied to high EER equipment. [150.1(b)4Bi]
2. There is now only one set of prescriptive measures (prescriptive package A). [150.1(c)]
3. There is a new allowance for supplemental heating systems. It includes limitations on size and requirements for timing controls. [150.1(c)6]
4. The temperature split approach to minimum airflow verification for refrigerant charge verification has been omitted. This reduces the number of required measurement access holes from two to one. [150.1(c)7Aia]
5. Some package units, mini-splits and variable refrigerant flow systems will be required to demonstrate proper refrigerant charge using a weigh-in approach and must be verified by a HERS rater. [150.1(c)7Aii]
6. Ducts not insulated because they are deemed to be in directly conditioned space must be verified by a HERS rater utilizing the duct leakage to outside procedures. [150.1(c)9]
7. There is a new prescriptive requirement in climate zones 8 through 14 for whole house fans designed to provide ventilation cooling. [150.1(c)12]
8. When homes utilizing the prescriptive approach have automatic zonal control, they are prohibited from using bypass ducts that divert supply air directly back to the return air stream. Using the performance approach, there is an energy penalty for systems choosing to utilize bypass ducts for zonal control. [150.1(c)13]
9. Maximum Rated Total Cooling Capacity compliance credit has been deleted.

Additions and Alterations - Section 150.2

The new requirements in the 2013 Standards for HVAC systems in homes that are altered or added to are summarized and discussed in Chapter 9.

4.1.3 Common System Types

The typical new California home in the central valley and the desert has a gas furnace and a split system air conditioner. Both heating and cooling is typically distributed to each of the rooms through air ducts. Most of the mandatory measures and prescriptive requirements are based on this type of system. In some areas, a heat pump provides both heating and cooling, eliminating the furnace. In coastal climates and in the mountains, air conditioning is rare and most new homes are heated by gas furnaces.

Although the Standards focus on the typical system, they also apply to other systems as well, including some radiant hydronic systems where hot water is distributed to parts of the home to provide at least some of the heat to conditioned space.

Electric resistance systems are used in some areas and applications, although it is difficult for them to comply under the Standards.

Ground-source or water source heat pump (geo-exchange) systems are also used, especially in areas where there is no gas service. Unlike the more typical air source systems, these utilize water circulated underground or in large ponds or lakes as the heat source (in heating mode) and heat sink (in cooling mode).

This chapter focuses mostly on typical systems, but a section is provided to deal with the alternative systems as well.

4.1.4 California Appliance Standards and Equipment Certification

§110.0 – General

§110.1 – Appliance Efficiency Regulations

Most heating and cooling equipment installed in new California homes is regulated by the National Appliance Efficiency Conservation Act (NAECA) and/or the California *Appliance Efficiency Regulations (Title 20)*. Both the federal and state appliance standards apply to the manufacture of new equipment and are applicable for equipment used in replacements, repairs or for any other purpose. The Appliance Efficiency Regulations are enforced at the point of sale, while the Energy Efficiency Standards explained this compliance manual are enforced by local enforcement agencies.

The following types of equipment (in the list below) are covered by the *Appliance Efficiency Regulations*. For this equipment, the manufacturer must certify that the equipment complies with the current *Appliance Efficiency Regulations* at the time of manufacture.

Appliances Covered by the *Appliance Efficiency Regulations*:

1. Room air conditioners
2. Room air conditioning heat pumps
3. Central air conditioners with a cooling capacity of less than 135,000 Btu/hr
4. Central air conditioning heat pumps
5. Gas-fired central furnaces
6. Gas-fired boilers
7. Gas-fired furnaces
8. Gas-fired floor furnaces
9. Gas-fired room heaters
10. Gas-fired duct furnaces
11. Gas-fired unit heaters

The *Appliance Efficiency Regulations* do not require certification for:

1. Electric resistance space heaters
2. Oil-fired wall furnaces, floor furnaces, and room heaters (some are voluntarily listed with certified gas-fired furnaces).

Equipment that does not meet the Federal Appliance Efficiency Standards may not be sold in California. Any equipment covered by the *Appliance Efficiency Regulations* and sold in California must have the date of manufacture

permanently displayed in an accessible place on that equipment. This date is frequently included as part of the serial number.

Note: Equipment manufactured before the effective date of a new standard may be sold and installed in California indefinitely, as long as the performance and prescriptive approach demonstrates energy compliance of the building using the lower efficiency of the relevant appliances.

The compliance and enforcement process should ensure that all installed HVAC equipment regulated by the *Appliance Efficiency Regulations* is certified to the Energy Commission.

Plan Review Process (Compliance)

During the plan review process builder must show compliance with the *Appliance Efficiency Regulations* by providing the efficiency of the HVAC equipment that is to be installed. Typically the builder does not identify the exact make or model at this point during the process. The Plans Examiner is responsible for verifying that the specified equipment efficiency complies with the *Appliance Efficiency Regulations.*

Field Inspection (Enforcement)

It is the responsibility of The Field Inspector to visually verify that the product information on the installed HVAC equipment matches the efficiency that was approved by the Plans Examiner. To facilitate the inspection process the Field Inspector may reference the CF2R-MCH-01-H form submitted by the builder/installing contractor. Additionally, the Field Inspector must also verify that the installed HVAC equipment is certified to the Energy Commission. The Field Inspector, at their discretion, may require the builder/installing contractor to provide a print out from the Energy Commission Appliance Efficiency Database of certified equipment listing the same make and model that is installed.

If the specifications labeled on the HVAC equipment do not match the equipment specifications on the Energy Commission Appliance Efficiency Database, the Inspector shall issue a correction notice to the builder/installing contractor. The following statement may be used as a correction notice.

4.1.5 Federal Appliance Standards (NAECA)

On June 27, 2011 the U.S. Department of Energy adopted new federal air conditioner efficiency standards. For California those federal standards require efficiencies of SEER 14 and EER 12.2 for central split system air conditioners smaller than 45,000 Btu/hr (a SEER 14 and EER of 11.7 is required for larger central split system air conditioners). The new federal standards go into effect on January 1, 2015, which is one year after the January 1, 2014 effective date of the 2013 Standards. For performance approach simulations for projects subject to building permits (newly constructed buildings, additions and alterations to existing buildings) applied for after December 31, 2014, the compliance software will use a standard design that has been updated for the new federal standards.

In the past production builders have found it to be disruptive to have federal

appliance efficiency standards change in the middle of a California Building Energy Efficiency Standards code cycle. They have preferred that for the entire period of the code cycle, that energy performance compliance be determined based on compliance both with the California building standards requirements plus the federal appliance efficiency standards. In that way they can build out their subdivisions with measures that remain consistent throughout the code cycle, rather than have to track and cope with a change in those measures in the middle of the cycle, which results in different customers receiving homes with different levels of energy efficiency. Other builders may prefer to cope with that change in the middle of the cycle, and build homes prior to the effective date of the federal standards that have a worse efficiency (and likely lower construction cost) than the homes that they build after the effective date of the federal standards.

The Energy Commission will direct compliance software developers to provide either approach to builders so they can choose which approach to take. Based on the builder's choice the software will automatically determine whether compliance has been achieved.

For projects with permits applied for between January 1, 2014 and December 31, 2014 builders have two choices:

Option 1: Choose to Change the Efficiency for Their Homes in the Middle of the Code Cycle. Install equipment that meets the SEER 13 requirements of the current federal air conditioner standards. The software will compare the efficiency of the installed equipment against a standard design of SEER 13 to determine to what extent the building complies with the Building Standards. Starting January 1, 2015 the standard design will change to match the new federal air conditioner standards. After that point in time builders will have to improve the efficiency of the air conditioners they install to be equal to or better than the new federal air conditioner standards, and the efficiency measures required in the rest of the house may have to change to comply with the Building Standards depending on the air conditioner efficiencies that they choose.

Option 2: Choose to Build a Constant Efficiency for their Homes Throughout the Code Cycle. Install higher efficiency air conditioners that meet the new federal air conditioner efficiency standards. The software will compare the higher efficiency of the installed air conditioner against a standard design that meets the new federal air conditioner efficiency standards. Builders will be able to install the same air conditioner efficiency before and after the federal air conditioner standards effective date; expectations are that the construction costs will come down after the effective date as manufacturers are competing to offer equipment compliant with the new federal standards at lowest cost – this cost competition also may occur earlier than the effective date, as manufacturers endeavor to gain a competitive advantage ahead of the effective date. Builders will be able to install other building energy efficiency measures in their homes throughout the code cycle without having to have a disruptive change in what their crews are installing, and can avoid customers receiving homes that have different efficiency levels and measures in the

middle of the code cycle.

4.2 Heating Equipment

This section addresses the requirements for heating equipment, including furnaces, boilers, heat pumps and electric resistance equipment.

4.2.1 Mandatory Measures for Heating Equipment

A. Equipment Efficiency

§110.1 and §110.2(a)

Appliance Efficiency Regulations

The efficiency of most heating equipment is regulated by NAECA (the federal appliance standard) and the California Appliance Efficiency Regulations. These regulations are not contained in the Building Energy Efficiency Standards but are published separately. These regulations are referenced in §110.1. The Appliance Efficiency Regulations include definitions for all types of equipment and are scheduled to be updated January 1, 2015, which may change the minimum efficiencies of most equipment.

Note: The Appliance Efficiency Regulations that are in effect when the building permit is applied for will determine the minimum efficiency of the appliances identified in the compliance documentation.

The energy efficiency of other equipment is regulated by §110.2(a). Also, see the Nonresidential Compliance Manual for more information on larger equipment.

1. Gas and Oil-Fired Furnaces

   The current Appliance Efficiency Regulations require that the Annual Fuel Utilization Efficiency (AFUE) of all new gas and oil-fired central furnaces with a single phase electrical supply be at least 78% with an output capacity less than 225,000 Btu/hr.

   Gas and oil-fired central furnaces with outputs greater than or equal to 225,000 Btu/hr are rated according to their Thermal (or Steady State) Efficiency. The minimum Thermal Efficiency for large gas furnaces is 80% and 81% for large oil-fired central furnaces.

Table 4-1 – Minimum Efficiency for Gas and Oil-Fired Central Furnaces

Appliance	*Rated Input (Btu/hr)*	*Minimum Efficiency (%)*		
		AFUE Eff Before 1/1/15	AFUE Eff 1/1/15	*Thermal Efficiency*
Weatherized gas central furnaces with single phase electrical supply	< 225,000	78	78	—
Non-weatherized gas and oil central furnaces with single phase electrical supply	< 225,000	80	80	
Weatherized oil central furnaces with single phase electrical supply	< 225,000	78	78	
Non-weatherized oil central furnaces with single phase electrical supply	< 225,000	83	83	
Gas central furnaces	≥ 225,000			80
Oil central furnaces	≥ 225,000			81

Source: California Appliance Efficiency Regulations Table E-4

Non-central gas furnaces and space heaters shall be certified to have AFUE values greater than or equal to those listed in Table 4-2 below:

Table 4-2 – Minimum Heating Efficiency for Non-Ducted, Non-Central Gas Fired Heating Equipment

Type	**Capacity**	**AFUE**
Wall Furnace (fan type)	up to 42,000 Btu/hour	73%
	over 42,000 Btu/hour	74%
Wall Furnace (gravity type)	up to 10,000 Btu/hour	59%
	over 10,000 Btu/hour up to 12,000 Btu/hour	60%
	over 12,000 Btu/hour up to 15,000 Btu/hour	61%
	over 15,000 Btu/hour up to 19,000 Btu/hour	62%
	over 19,000 Btu/hour up to 27,000 Btu/hour	63%
	over 27,000 Btu/hour up to 46,000 Btu/hour	64%
	over 46,000 Btu/hour	65%
Floor Furnace	up to 37,000 Btu/hour	56%
	over 37,000 Btu/hour	57%
Room Heater	up to 18,000 Btu/hour	57%
	over 18,000 Btu/hour up to 20,000 Btu/hour	58%
	over 20,000 Btu/hour up to 27,000 Btu/hour	63%
	over 27,000 Btu/hour up to 46,000 Btu/hour	64%
	over 46,000 Btu/hour	65%

Source: California Appliance Efficiency Regulations Table E-2

2. Heat Pumps and Electric Heating

Heat pumps shall be certified to have a HSPF or COP equal to or better than those listed in Table 4-3 below:

Table 4-3 – Minimum Heating Efficiency for Heat Pumps

Equipment Type	Appliance Efficiency Reg. Reference	Configuration/Size	Minimum Heating Efficiency	
Packaged terminal heat pumps (heating mode)	Table 110.2 E	Newly constructed or newly conditioned buildings or additions	Before 10/08/2012 3.2-(0.026 x Cap[1]/1000) = COP	After 10/08/2013 3.7-(0.052 x Cap[1]/1000) = COP
Packaged terminal heat pumps (heating mode)	Table 110.2 E	Replacements	2.9-(0.026 x Cap[1]/1000) = COP	
Single phase air source heat pumps (NAECA)	Table C-2	< 65,000 Btu/h Cooling Capacity prior to 1/1/2015	Packaged 7.7 HSPF Split 7.7 HSPF	
		< 65,000 Btu/h Cooling Capacity effective 1/1/2015	Packaged 8.0 HSPF Split 8.2 HSPF	
		Space Constrained < 65,000 Btu/h Cooling Capacity	Packaged 7.4 HSPF Split 7.4 HSPF	
		Small duct high velocity < 65,000 Btu/h Cooling Capacity	7.7 HSPF	
Three-phase air source heat pumps	Table C-3	< 65,000 Btu/h	Packaged 7.4 HSPF Split 7.4 HSPF	
		≥ 65,000 and <135,000	3.3 COP	
		≥ 135,000 and <240,000	3.2 COP	
		≥ 240,000 and <760,000	3.2 COP	
Water-source heat pumps	Table C-5	< 135,000 Btu/h	4.2 COP	
		≥ 135,000 Btu/h, < 240,000 Btu/h	2.9 COP	
Single package vertical heat pumps	Table C-6	< 65,000 Single Phase	3.0 COP	
		< 65,000 3-Phase	3.0 COP	
		≥ 65,000 and < 135,000	3.0 COP	
		≥ 135,000 and < 240,000	2.9 COP	

1. Cap = Cooling Capacity

Source: California Appliance Efficiency Regulation and Energy Efficiency Standards

There are no minimum appliance efficiency standards for electric-resistance or electric-radiant heating systems.

3. Gas and Oil-Fired Central Boilers and Electric Boilers

Gas and oil-fired central boilers shall be certified to have and AFUE or Combustion Efficiency equal to or better than those listed in Table 4-4 below:

Table 4-4 – Minimum Efficiency for Gas and Oil Fired Central Boilers

Source: California Appliance Efficiency Regulations Table E-3

Appliance	*Rated Input (Btu/hr)*	*Minimum Efficiency (%)* AFUE *Effective September 1, 2012*	Combustion Efficiency at Maximum Rated Capacity
Gas steam boilers with single phase electrical supply	< 300,000	80 [1]	—
Gas hot water boilers with single phase electrical supply	< 300,000	82 [1,2]	—
Oil steam boilers with single phase electrical supply	< 300,000	82	—
Oil hot water boilers with single phase electrical supply	< 300,000	84 [2]	—
All other boilers with single phase electrical supply	< 300,000	—	—
Gas packaged boilers	≥ 300,000	—	80
Oil packaged boilers	≥ 300,000	—	83

[1] No constant burning pilot light design standard. [2] Automatic means for adjusting temperature design standard.

B. Heating System Controls

§150.0(i), 110.2(b), Exceptions to §110.2(b), 110.2(c), Exception to 110.2(c)

All unitary heating systems, including heat pumps, must be controlled by a setback thermostat. These thermostats must be capable of allowing the occupant to program the temperature set points for at least four different periods in 24 hours. For example, the setback thermostat could be programmed at specific temperature starting at 6:30 am, 9:00 am, 4:30 pm and 9:00 pm, thus allowing for four periods within 24 hours.

If the heating system is integrated into a central energy management control system (EMCS), then that system does not need to comply with the set back requirements. Additionally, all gravity gas wall heaters, floor heaters, room heaters and fireplaces, decorative gas appliances, wood stoves and non-central electric heaters do not need to be controlled by a setback thermostat.

Any heat pump with supplementary electric resistance heating must have controls that have two capabilities to limit the electric resistance heating. The first is to set the cut-on and cut-off temperatures for compression and supplementary heating at different levels.

For example, if the heat pump begins heating when the inside temperature reaches 68°F, the electric resistance heating is set to come on if the temperature gets below 65°F; and there is an opposite off mode such that if the heat pump shuts off when the temperature reaches 72°F, the back-up

heating shuts off at 68°F.

The second control capability prevents the supplementary electric resistance heater from operating when the heat pump alone can meet the heating load, except during defrost. There is a limited exception to this second function for "smart thermostats" that provide the following: intelligent recovery, staging, ramping, or another control mechanism that prevents the unnecessary operation of supplementary electric resistance heating when the heat pump alone can meet the heating load.

To meet the thermostat requirements, a thermostat for a heat pump must be a "smart thermostat" that minimizes the use of supplementary heating during startup and recovery from setbacks.

Note: Room air conditioner heat pumps are not required to comply with the thermostat requirements.

C. Equipment Sizing

§150.0(h)1 and 2

The Standards do not set limits on the sizing of heating equipment, but they do require that heating loads be calculated for new heating systems. Oversized equipment typically operates less efficiently and can create comfort problems due to excessive cycling and high airflow.

Acceptable load calculation procedures include methods described in

1. The ASHRAE Handbook – Equipment,
2. The ASHRAE Handbook – Applications,
3. The ASHRAE Handbook – Fundamentals,
4. The SMACNA Residential Comfort System Installation Manual, or
5. ACCA Manual J.

The Standards require that the outdoor design conditions for load calculations be selected from Reference Joint Appendix JA2, and that the indoor design temperature for heating load calculations be 68°F.

The outdoor design temperature must be no lower than the "heating winter median of extremes" as listed in the Reference Joint Appendix JA2.

If the actual city location for a project is not included in the Reference Joint Appendix JA2, or if the data given for a particular city does not match the conditions at the actual site as well as that given for another nearby city, consult the local building department for guidance.

The load calculations must be submitted with the compliance documentation when requested by the building department.

The load calculations may be prepared by 1) a mechanical engineer, 2) the mechanical contractor who is installing the equipment or 3) someone who is qualified to do so in the State of California according to Division 3 of the Business and Professions Code.

D. Furnace Temperature Rise

§150.0(h)4

High temperature rise in a furnace is an indicator of low airflow and/or over specification firing rate. High temperature rise causes low efficiency and is potentially damaging to the furnace. Central forced-air heating furnace installations must be configured to operate at or below the furnace manufacturer's maximum inlet-to-outlet temperature rise specification.

E. Standby Losses and Pilot Lights

§110.5 and §110.2(d)

Fan-type central furnaces may not have a continuously burning pilot light. This requirement does not apply to wall furnaces, floor furnaces or any gravity type furnace. Household cooking appliances also must not have a continuously burning pilot light except for those without an electrical supply voltage connection and in which each pilot consumes less than 150 Btu/hr.

Larger gas-fired and oil-fired forced air furnaces with input ratings ≥ 225,000 Btu/h (which is bigger than a typical residential furnace) must also have an intermittent ignition or interrupted device (IID), and either power venting or a flue damper.

A vent damper is an acceptable alternative to a flue damper for furnaces where combustion air is drawn from the conditioned space. All furnaces with input ratings ≥ 225,000 Btu/h, including electric furnaces, that are not located within the conditioned space must have jacket losses not exceeding 0.75 percent of the input rating.

F. Pipe Insulation

§150.0(j)2C, §150.0(j)3, §120.3

The piping for heat pumps and for both steam and hydronic heating systems with an operating pressure above 15 psig (103kPa) shall meet the requirements from Table 4-5, which can be found below. When the insulation is located outside conditioned space it is required to be protected from damage caused by environmental conditions. The insulation must be rated for outdoor use or covered with a material that can withstand the outdoor conditions. Examples of these types of coverings are aluminum, sheet metal, painted canvas, plastic cover or if the insulation is cellular foam, a coating that is water retardant and shields from solar radiation. Additionally, the insulation used for the refrigerant suction line of a heat pump must be Class I or Class II vapor retarding. If the insulation is not Class I or Class II, then the insulation must be installed at the required thickness that would qualify it as a Class I or Class II vapor retarder.

Table 4-5 - Insulation Requirements for Heating System Piping

Fluid Temperature Range (°F)	Conductivity Range (in Btu-inch per hour per square foot per °F	Insulation Mean Rating Temperature(°F)	Nominal Pipe Diameter (in inches)				
			1 and less	1 to <1.5	1.5 to <4	4 to <8	8 and larger
			Insulation Thickness Required (in inches)				

Space heating, Hot Water systems (steam, steam condensate and hot water), Service Water Heating Systems							
Above 350	0.32-0.34	250	4.5	5.0	5.0	5.0	5.0
251-350	0.29-0.31	200	3.0	4.0	4.5	4.5	4.5
201-250	0.27-0.30	150	2.5	2.5	2.5	3.0	3.0
141-200	0.25-0.29	125	1.5	1.5	2.0	2.0	2.0
105-140	0.22-0.28	100	1.0	1.5	1.5	1.5	1.5
Heat Pump Suction Line							
40-60	0.21-0.27	75	0.5	0.5	1.0	1.0	1.0
Below 40	0.20-0.26	50	1.0	1.5	1.5	1.5	1.5

From Table 120.3 A of the Building Energy Efficiency Standards

4.2.2 Prescriptive Requirements for Heating Equipment

§150.1(c)6 Heating System Type

Prescriptive Component Package A requires that a gas heating system or a heat pump be installed. The minimum energy efficiency of the heating equipment is specified by the mandatory measures (see above).

Supplemental heating systems are allowed prescriptively and the designer may elect to provide supplemental heating to a space such as a bathroom. In this instance, supplemental heating system must be installed in a space that is served by the primary heating system and must have a thermal capacity of less than 2 kW or 7,000 Btu/hr while being controlled by a time-limiting device not exceeding 30 minutes. Electric resistance and electric radiant heating is only allowed to be installed as the primary heating system when using the performance compliance method as described in Section 4.2.3.

Using the prescriptive compliance approach, no additional credit is given for selecting equipment that is higher than what is required by the prescriptive component package.

4.2.3 Compliance Options for Heating Equipment

There is one option for receiving compliance credit related to the heating system. This credit is available through the performance compliance method.

High Efficiency Heating

Heating system efficiencies are explained above in section 4.2.2 and the minimum efficiency is required per the prescriptive package. With the performance compliance method, compliance credit is awarded for selecting higher efficiency heating equipment, such as a high efficiency furnace or heat pump. With a furnace, for example, selecting an AFUE higher than 78 will result in compliance credit which can then be used to offset other building

features that do not satisfy the prescriptive requirements but that do comply with the mandatory requirements.

4.3 Cooling Equipment

This section addresses the requirements for space cooling equipment.

4.3.1 Mandatory Measures for Cooling Equipment

A. Equipment Efficiency

§110.1 and §110.2(a) and the Appliance Efficiency Regulations

The efficiency of most cooling equipment is regulated by NAECA (the federal appliance standard) and the California Appliance Efficiency Regulations. These regulations are not contained in the Building Energy Efficiency Standards but rather in separate documents. These regulations are referenced in §110.1. The Appliance Efficiency Regulations include definitions for all types of equipment. The energy efficiency of larger equipment is regulated by §110.2(a). See the Nonresidential Compliance Manual for information on larger equipment.

1 Central, Single Phase Air Conditioners and Air Source Heat Pumps (under 65,000 Btu/h)

The central, single phase air conditioners and air source heat pumps that are most commonly installed in residences have a smaller capacity than 65,000 Btu/h. The Appliance Efficiency Regulations for this equipment require minimum Seasonal Energy Efficiency Ratios (SEER).

The Seasonal Energy Efficiency Ratio of all new central, single phase air conditioners and air source heat pumps with output less than 65,000 Btu/h shall be certified to the Energy Commission to have values no less than the values listed below in Table 4-6.

Table 4-6 – Minimum Cooling Efficiencies for Central Air Conditioners and Heat Pumps

Appliance	Type	SEER Eff Before 1/1/2015	SEER Eff 1/1/2015	EER Eff 1/1/2015
Central Air Conditioners	Split System <45,000 Btuh	13.0	14	12.2
	Split System ≥45,000 Btuh	13	14	11.7
	Single Package	13.0	14	11.0
Central Air Source Heat Pumps	Split System	13.0	14	NR
	Single Package	13.0	14	
Space Constrained Air Conditioner	Split System	12	12	NR
	Single Package	12	12	NR
Space Constrained Heat Pump	Split System	12	12	NR
	Single Package	12	12	NR
Through-The-Wall Air Conditioner	Split System	10.9	10.9	NR
	Single Package	10.6	10.6	NR
Through-The-Wall Heat Pump	Split System	10.9	10.9	NR
	Single Package	10.6	10.6	NR
Small Duct, High Velocity Air Conditioner	All	13	13	NR
Small Duct, High Velocity Heat Pump	All	13	13	NR

Source: California Appliance Efficiency Regulations Table C-2

NR = No Requirement

2 Other Air Conditioners and Heat Pumps

Appliance Efficiency Regulations

The current Appliance Efficiency Regulations for larger central air conditioners and heat pumps, and for all room air conditioners and room air conditioner heat pumps shall be certified to the Energy Commission by the manufacturer to have values no less than the values listed in Table 4-7 and Table 4–8**Error! Reference source not found.**.

Table 4-7 – Minimum Cooling Efficiency for Larger Central Air Conditioners and Heat Pumps

Equipment Type	Size Category	EER
Central Air Conditioners	≥65,000 Btu/h but <135,000 Btu/h	11.2[1] 11.0[2]
	≥135,000 Btu/h but <240,000 Btu/h	11.0[1] 10.8[2]
	≥240,000 Btu/h but <760,000 Btu/h	10.0[1] 9.8[2]

Central Air Source Heat Pumps	≥ 65,000 Btu/h but <135,000 Btu/h	11.0[1] 10.8[2]
	≥135,000 Btu/h but <240,000 Btu/h	10.6[1] 10.4[2]
	≥240,000 Btu/h but <760,000 Btu/h	9.5[1] 9.3[2]
Central Water Source Heat Pumps	< 17,000 Btu/h	11.2
	≥ 17,000 Btu/h and < 135,000 Btu/h	12.0
	≥ 135,000 Btu/h and < 240,000 Btu/h	9.6
Water-Cooled Air Conditioners	< 17,000 < 65,000 Btu/h	12.1
	≥ 65,000 Btu/h and < 135,000 Btu/h	11.5
	≥ 135,000 Btu/h and < 240,000 Btu/h	11.0

1 Applies to equipment that has electric resistance heat or no heating.

2 Applies to equipment with all other heating-system types that are integrated into the unitary equipment.

Source: California Appliance Efficiency Regulations Table C-3, C-5

Table 4-8 – Minimum Cooling Efficiency for Non-Central Space Cooling Equipment

Including Room Air Conditioners; and Room Air Conditioner Heat Pumps; Package Terminal Air Conditioners (PTAC); Package Terminal Heat Pumps (PTHP), Single Package Vertical Air Conditioners (SPVAC) and Heat Pumps (SPVHP)

Equipment Type	Size Category (Input)	Minimum Efficiency	
Room Air Conditioners, with Louvered Sides	< 6,000 Btu/h	9.7 EER	
	≥ 6,000 Btu/h and - 7,999 Btu/h	9.7 EER	
	≥ 8,000 Btu/h and -13,999 Btu/h	9.8EER	
	≥ 14,000 Btu/h and - 19,999 Btu/h	9.7 EER	
	≥ 20,000 Btu/h	8.5 EER	
Room Air Conditioners, without Louvered Sides	< 6,000 Btu/h	9.0 EER	
	≥ 6,000 Btu/h and - 7,999 Btu/h	9.0 EER	
	≥ 8,000 and - 19,999 Btu/h	8.5 EER	
	≥ 20,000 Btu/h	8.5 EER	
Room Air Conditioner Heat Pumps with Louvered Sides	< 20,000 Btu/h	9.0 EER	
	≥ 20,000 Btu/h	8.5 EER	
Room Air Conditioner Heat Pumps without Louvered Sides	< 14,000 Btu/h	8.5EER	
	≥ 14,000 Btu/h	8.0 EER	
Casement-Only Room Air Conditioner	All Capacities	8.7 EER	
Casement-Slider Room Air Conditioner	All Capacities	9.5 EER	
PTAC (cooling mode) Newly constructed or newly conditioned buildings or additions	All Capacities	Before 10/08/2012 12.5-(0.213 x Cap/1000) = EER	After 10/08/2012 13.8-(0.300 x Cap/1000) = EER
PTAC (cooling mode) Replacements	All Capacities	10.9-(0.213 x Cap/1000) = EER	
PTHP (cooling mode) Newly constructed or newly conditioned buildings or additions	All Capacities	Before 10/08/2012 12.3-(0.213 x Cap/1000) = EER	After 10/08/2012 14.0-(0.300 x Cap/1000) = EER
PTHP (cooling mode) Replacements	All Capacities	10.8-(0.213 x Cap/1000) = EER	
SPVAC (cooling mode)	< 65,000 Btu/h	9.0 EER	
	≥ 65,000 Btu/h and < 135,000 Btu/h	8.9 EER	
	≥ 135,000 Btu/h and < 240,000 Btu/h	8.6 EER	
SPVHP (cooling mode)	< 65,000 Btu/h	9.0 EER	
	≥ 65,000 Btu/h and < 135,000 Btu/h	8.9 EER	
	≥ 135,000 Btu/h and < 240,000 Btu/h	8.6 EER	

Cap. = Cooling Capacity (Btu/hr)

Source: California Appliance Efficiency Regulations the Energy Efficiency Standards

B. Insulation for Refrigerant Lines in Split System Air Conditioners

§150.0(j)2 and 3, §150.0(m)9 Two refrigerant lines connect the indoor and outdoor units of split system air conditioners and heat pumps: the liquid line (the smaller diameter line) and the suction line (the larger diameter line). The liquid line is at an elevated temperature relative to outdoor and indoor temperatures, in those areas, heat escaping from it is helpful; therefore, it should not be insulated. When the liquid line runs through the attic, its surrounding temperature is higher than the liquid line temperature. It would be advantageous to insulate liquid lines running through attics. The suction line carries refrigerant vapor that is cooler than ambient in the summer and (with heat pumps) warmer than ambient in the winter. This line must be insulated to the required thickness (in inches) as specified in the table below.

Table 4-9 – Insulation Requirements for Split System Refrigerant Piping

Fluid Temperature Range (°F)	Conductivity Range (in Btu-inch per hour per square foot per °F	Insulation Mean Rating Temperature(°F)	Nominal Pipe Diameter (in inches)				
			1 and less	1 to <1.5	1.5 to <4	4 to <8	8 and larger
			Insulation Thickness Required (in inches)				
Space cooling systems suction line							
40-60	0.21-0.27	75	0.5	0.5	1.0	1.0	1.0
Below 40	0.20-0.26	50	1.0	1.5	1.5	1.5	1.5
From Table 120.3-A of the Building Energy Efficiency Standards							

Insulation used for the suction line must be protected from physical damage or from UV deterioration when it is located in outside conditioned space. Pipe insulation is typically protected by an aluminum or sheet metal jacket, painted canvas, plastic cover, or coating that is water retardant and UV resistant. Additionally, the insulation used for the refrigerant suction line of a heat pump must be Class I or Class II vapor retarding. If the insulation is not Class I or Class II, then the insulation must be installed at the required thickness that would qualify it as a Class I or Class II vapor retarder. See §150.0(j) 3, and Figure 4-1.

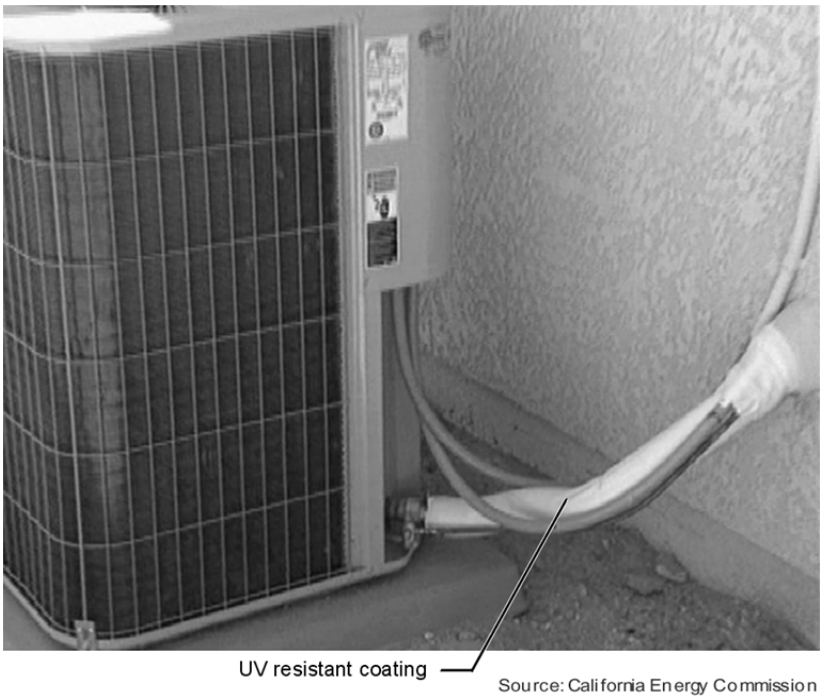

Figure 4-1 – Refrigerant Line Insulation

C. Outdoor Condensing Unit Clearance

§150.0(h)3

Any obstruction of the airflow through the outdoor unit of an air conditioner or heat pump lowers its efficiency. Dryer vents are prime sources for substances that clog outdoor coils and sometimes discharge substances that can cause corrosion. Therefore, condensing units shall not be placed within 5 feet of a dryer vent. Regardless of location, condenser coils should be cleaned regularly in all homes.

Figure 4-2 – Non-compliant Condensing Unit Clearance from Dryer Vents

D. Equipment Sizing

§150.0(h)

Similar to heating equipment, the Standards do not set limits on the size of cooling equipment, but they do require that cooling loads be calculated for new cooling systems. Avoiding oversizing is especially important for cooling equipment because ducts must be sized large enough to carry the mandatory airflow and oversized air conditioners make this difficult.

The outdoor design conditions for load calculations must be selected from Reference Joint Appendix JA2, Table 2-3, using values no greater than the "1.0 percent Cooling Dry Bulb" and "Mean Coincident Wet Bulb" values listed. The indoor design temperature for cooling load calculations must be 75°F. Acceptable load calculation procedures include methods described in

1. The ASHRAE Handbook – Equipment,
2. The ASHRAE Handbook – Applications,
3. The ASHRAE Handbook – Fundamentals,
4. The SMACNA Residential Comfort System Installation Manual, or
5. ACCA Manual J

Cooling load calculations must be submitted with compliance documentation when requested by the building department. The load calculations may be prepared by 1) a mechanical engineer, 2) the mechanical contractor who is installing the equipment or 3) someone who is qualified to do so in the State of California according to Division 3 of the Business and Professions Code.:

E. Hole for Static Pressure Probe (HSPP) or Permanently Installed Static Pressure Probe (PSPP)

§150.0(m)13

Space conditioning systems that utilize forced air ducts to supply cooling to occupiable space shall have a hole for the placement of a static pressure probe (HSPP) or permanently installed static pressure probe (PSPP) installed down stream from the evaporator coil.

The HSPP or PSPP must be installed in the required location, in accordance with the specifications detailed in Reference Residential Appendix RA3.3. The HSPP or PSPP is required in order to facilitate system airflow measurement when using devices/procedures that depend on supply plenum pressure measurements. The HSPP or PSPP allows HERS raters to perform the required diagnostic airflow testing in a non-intrusive manner, by eliminating the necessity for the rater to drill holes in the supply plenum for placement of pressure measurement probes.

The size and placement of the HSPP/PSPP shall be in accordance with RA3.3.1.1 and shall be verified by a HERS rater. In the event that the HSPP/PSPP cannot be installed as shown in Figure RA3.3-1, due to the configuration of the system or that the location is not accessible, an alternative location may be provided that can accurately measure the average static

pressure in the supply plenum. If an alternative location cannot be provide then the HSPP/PSPP is not required to be installed. The HERS rater will verify this. Note that not installing an HSPP/PSPP will limit the airflow measurement method to either a powered flowhood or passive (traditional) flow hood.

When the mandatory measure for minimum system airflow rate is in effect (entirely new systems), there must be a hole in the supply plenum, provided by the installing contractor, for the placement of a static pressure probe (HSPP). Alternatively a permanently installed static pressure probe (PSPP) must be installed in the same location.

This requirement also applies when the plenum pressure matching method or the flow grid method of airflow measurement is used by either the installer or the rater to verify airflow in an altered system. Note that the HSPP/PSPP must be installed by the installer, not the rater.

See Air Distribution Ducts, Plenums, and Fans Section 4.4 for discussion regarding mandatory sizing/airflow requirements for ducted systems with cooling.

4.3.2 Prescriptive Requirements for Cooling Equipment

§150.1(c)7

The Prescriptive Component Packages do not require that a cooling system be installed. However if one is to be installed, the cooling equipment efficiency requirements are specified by the mandatory measures (see above).
Using the prescriptive compliance approach, no additional credit is given for selecting equipment that is higher than what is required by the prescriptive component package.

Prescriptive Component Package A, for split system equipment in climate zones 2 and 8 through 15, requires refrigerant charge verification (RCV) and the installation of a measurement access hole (MAH). The RCV must be performed by the installer and/or HERS rater. The MAH provides a non-intrusive means of measuring return air temperature, which is a parameter important to the RCV process. The alternative to RCV is the installation of a refrigerant charge indicator display (§151(f)7Aia).

A. Refrigerant Charge Verification (RCV)

The prescriptive standards require that a HERS rater verify that air-cooled air conditioners and air-source heat pumps have the correct refrigerant charge. The RCV procedures are documented in Reference Residential Appendix RA3.2, and RA1.2.

Refrigerant charge refers to the actual amount of refrigerant present in the system. Excessive refrigerant charge (overcharge) reduces system efficiency and can lead to premature compressor failure. Insufficient refrigerant charge (undercharge) also reduces system efficiency and can cause compressors to overheat. Ensuring correct refrigerant charge can significantly improve the performance of air conditioning equipment. Refrigerants are the working fluids in air conditioning and heat pump systems that absorb heat energy from one area (the evaporator),transfer and reject it to another (the condenser).

B. Note: The Refrigerant Charge Verification process is discussed in greater detail later in Section 4.9.Measurement Access Hole (MAH)

MAH provide a non-intrusive means for refrigerant charge verification by HERS raters and other third party inspectors, since they eliminate the need for the raters/inspectors to drill holes into the installed air conditioning equipment enclosures for placement of the temperature sensors that are required by the refrigerant charge verification test procedures described in the Reference Residential Appendix RA3.2.

Installation of MAH must be performed by the installer of the air conditioner or heat pump equipment according to the specifications given in Reference Residential Appendix RA3.2.

The MAH feature consists of one 5/8 inch (16 mm) diameter hole in the return plenum, upstream from the evaporator coil (see figure RA3.2-1 in Reference Residential Appendix RA3.2).

C. Charge Indicator Display

The installation of a charge indicator display (CID) may be used as an alternative to the prescriptive requirement for HERS diagnostic testing of the refrigerant charge in split system air conditioners and heat pumps. The purpose of the CID is to provide real-time information to the building occupant about the status of the system refrigerant charge, metering device, and system airflow. The CID will monitor and determine the operating performance of split system air conditioners and heat pumps, and provide visual indication to the system owner or operator if the system's refrigerant charge, airflow, or metering device performance does not conform to approved target parameters for minimally efficient operation. Thus, if the CID signals the owner/occupant that the system requires service or repair, the occupant can immediately call for a service technician to make the necessary adjustments or repairs. A CID can provide significant benefit to the owner/occupant by alerting the owner/occupant to the presence of inefficient operation that could result in excessive energy use/costs over extended periods of time. A CID can also indicate system performance faults that could result in system component damage or failure if not corrected, thus helping the owner/occupant to avoid unnecessary repair costs.

The CID procedures are documented in Reference Residential Appendix RA4.3.2.

Charge indicator display technologies shall be factory installed or field installed according to manufacturer's specifications. Reference Joint Appendix JA6 contains more information about CID technologies.

The presence of a CID on a system must be field verified by a HERS rater. See Reference Residential Appendix RA3.4.2 for the HERS verification procedure, which consists of a visual verification of the presence of the installed CID technology. The rater must inspect to see that the visual indication display component of the installed CID technology is mounted adjacent to the split system's thermostat. When the outdoor temperature is greater than 65°F, the rater must also observe that the system reports no system faults when the system is operated continuously for at least 15 minutes when the indoor air temperature returning to the air conditioner is at or above 70°F. When the outdoor temperature is below 65°F the Rater must

observe that the CID does a self diagnosis and indicates that the sensors and internal processes are operating properly.

Though not specifically mentioned in the CID protocols of Residential Appendix RA3.4.2, the Winter Set Up Method detailed in RA 1.2 may be used when normally allowed. For purposes of CID verification the Winter Setup Method will be treated the same as the Subcooling Method.

4.3.3 Performance Compliance Options for Cooling Equipment

There are several options for receiving compliance credit related to the cooling system. These credits are available through the performance compliance method.

A. High Efficiency Air Conditioner

Air conditioner efficiencies are determined according to federal test procedures. The efficiencies are reported in terms of Seasonal Energy Efficiency Rating (SEER) and Energy Efficiency Rating (EER). Savings can be achieved by choosing an air conditioner that exceeds the minimum efficiency requirements.

The EER is the full load efficiency at specific operating conditions. It is possible that two units with the same SEER can have different EERs. In cooling climate zones of California, for two units with a given SEER, the unit with the higher EER is more effective in saving energy. Using the performance compliance method, credit is available for specifying an air conditioner with an EER greater than 10 (see the compliance program vendor's compliance supplement). When credit is taken for a high EER or SEER, field verification by a HERS rater is required (see Reference Residential Appendix RA3.4).

B. Air Handler Watt Draw and System Airflow

It is mandatory that central forced air systems produce fan watt draws less than or equal to 0.58 watts/CFM and flow at least 350 CFM per nominal cooling ton. Performance compliance credits are available for demonstrating the installation of a high efficiency system with a lower fan wattage and/or higher airflow than the mandatory requirements. These credits can be achieved by selecting good duct design and can be assisted by a high efficiency fan. There are two possible performance compliance credits:

1. The performance compliance method allows the user's proposed fan watt draw to be entered and credit earned if it is lower than the default of 0.58 watts per CFM of system airflow. To obtain this credit, the system airflow must meet the mandatory requirement of at least 350 CFM/ton of nominal cooling capacity.
2. The performance compliance method allows the user's proposed airflow to be entered and credit earned if it is higher than the default of 350 CFM/ton of nominal cooling capacity. To obtain this credit, the fan watt draw must meet the mandatory requirement of no more than 0.58 Watts per CFM of nominal cooling capacity.

After installation, the contractor must test the actual fan power and airflow of the system using the procedure in *Reference Residential Appendix* RA3.3,

and show that it is equal or better than what was proposed in the compliance software analysis.

Field verification by a HERS rater is required (see Reference Residential Appendix RA3.3).

4.4 Air Distribution System Ducts, Plenums, and Fans

Air distribution system performance can have a big impact on overall HVAC system efficiency. Therefore, air distribution systems face a number of mandatory measures and prescriptive requirements, discussed below.

The 2013 Standards specify mandatory requirements for air distribution ducts to be sealed and tested in all climate zones. There are also a number of compliance credits available related to duct system design.

Duct efficiency is affected by the following parameters:

1. Duct location (attic, crawlspace, basement, inside conditioned space, or other)
2. Specific conditions in the unconditioned space, e.g., presence of a radiant barrier
3. Duct insulation characteristics
4. Duct surface area, and
5. Air leakage of the duct system

In performance calculations, duct efficiency can be calculated in one of two ways:

1. default input assumptions; or
2. diagnostic measurement values.

The computer program will use default assumptions for the proposed design when the user does not intend to make improvements in duct efficiency.

4.4.1 Mandatory Measures for Air Distribution System Ducts, Plenums, and Fans

A. Minimum Insulation

§150.0(m)1

In all cases, unless ducts are enclosed entirely in directly conditioned space, the minimum allowed duct insulation value is R-6. Note that higher values may be required by the prescriptive requirements as described below.

To determine whether ducts are enclosed entirely in directly conditioned space as it is defined in Section 100.1, a rater must field verify by visual inspection and by using the protocols of RA3.1.4.3.8. .

RA3.1.4.3.8 utilizes a duct leakage to outside test procedure to help ensure that the ducts are within the pressure boundary of the space being served by the duct system. Passing the test alone is not enough to establish that the ducts are entirely within directly conditioned space. The test procedure is in

addition to a basic visual inspection of the ducts to ensure that no portion of the duct system is obviously outside of the apparent pressure/thermal boundary. Once this has been established, the leakage to outside test verifies that the pressure boundary is intact and preventing leakage from escaping to the outside.

Applying this procedure to multi-family dwelling units poses a unique situation. In this case leakage to "outside" means conditioned air leaking from the ducts to anywhere outside of the pressure boundary of the space being served by the duct system, including adjacent dwelling units. Duct leakage to adjacent dwelling units is not desirable and should be eliminated. When performing the leakage to outside test, it is only necessary to pressurize the dwelling unit served by the duct system being tested.

§150.0(m)1 Exception to §150.0(m)1

Ducts and fans integral to a wood heater or fireplace are exempt from Standards Section 150.0(m)1.

§150.0(m)5

For the purpose of determining installed R-value of duct insulation based on thickness, when not an integral part of a manufacturer-labeled, insulated duct product such as vinyl flex duct, the following shall be used:

1. For duct wrap, the installed thickness of insulation must be assumed to be 75 percent of the nominal thickness due to compression.
2. For duct board, duct liner and factory-made rigid ducts not normally subjected to compression, the nominal insulation thickness shall be used.

B. Connections and Closures

§150.0(m)1, §150.0(m)2, §150.0(m)3

Note: Duct installation requirements are discussed in more detail in Duct Installation Standards Section 4.4.3

The Standards set a number of mandatory measures related to duct connections and closures. These measures address both the materials and methods used for duct sealing. The following is a summary. Refer to the sections of the Standards listed above for additional details.

C. Factory-fabricated Duct Systems

Factory fabricated duct systems must comply with the following requirements:

1. All factory-fabricated duct systems must comply with UL 181 for ducts and closure systems, including collars, connections, and splices, and be labeled as complying with UL 181. UL181 testing may be performed by UL laboratories or a laboratory approved by the Executive Director.

2. All pressure-sensitive tapes, heat-activated tapes, and mastics used in the manufacture of rigid fiberglass ducts must comply with UL 181 and UL 181A.
3. All pressure-sensitive tapes and mastics used with flexible ducts must comply with UL 181 and UL 181B.
4. Joints and seams of duct systems and their components cannot be sealed with cloth back rubber adhesive duct tapes unless such tape is used in combination with mastic and draw bands: or
5. It has on its backing the phrase "CEC approved," a drawing of a fitting to plenum joint in a red circle with a slash through it (the international symbol of prohibition), and a statement that it cannot be used to seal fittings to plenums and junction box joints.

D. Field-fabricated Duct Systems

Field –fabricated duct systems must comply with the following requirements:

1. Factory-made rigid fiberglass and flexible ducts for field-fabricated duct systems must comply with UL 181. All pressure-sensitive tapes, mastics, aerosol sealants, or other closure systems used for installing field-fabricated duct systems shall meet the applicable requirements of UL 181, UL 181A, and UL 181B.
2. Mastic sealants and mesh:
   a. Sealants must comply with the applicable requirements of UL 181, UL 181A, and/or UL 181B, and be nontoxic and water resistant.
   b. Sealants for interior applications must be tested in accordance with ASTM C731 and D2202.
   c. Sealants for exterior applications must be tested in accordance with ASTM C731, C732, and D 2202.
   d. Sealants and meshes must be rated for exterior use.
3. Pressure-sensitive tapes must comply with the applicable requirements of UL 181, UL 181A, and UL 181B.
4. Joints and seams of duct systems and their components must not be sealed with cloth back rubber adhesive duct tapes unless such tape is used in combination with mastic and draw bands: or
5. It has on its backing the phrase "CEC approved," a drawing of a fitting to plenum joint in a red circle with a slash through it (the international symbol of prohibition), and a statement that it cannot be used to seal fittings to plenums or junction box joints.

E. Draw Bands Used With Flexible Duct

1. Draw bands must be either stainless-steel worm-drive hose clamps or UV-resistant nylon duct ties.
2. Draw bands must have a minimum tensile strength rating of 150 pounds.
3. Draw bands must be tightened as recommended by the manufacturer

with an adjustable tensioning tool.

F. Aerosol-sealant Closures

1. Aerosol sealants shall meet the requirements of UL 723 and be applied according to manufacturer specifications.
2. Tapes or mastics used in combination with aerosol sealing shall meet the requirements of this Section.

If mastic or tape is used to seal openings greater than 1/4 inch, the combination of mastic and either mesh or tape must be used.

Building spaces such as cavities between walls, support platforms for air handlers, and plenums defined or constructed with materials other than sealed sheet metal, duct board, or flexible duct must not be used for conveying conditioned air including return air and supply air. The practice of using drywall materials as the interior surface of a return plenum is not allowed. Building cavities and support platforms may contain ducts. Ducts installed in cavities and support platforms must not be compressed to cause reductions in the cross sectional area of the ducts. Although a HERS rater may examine this as a part of his or her responsibilities when involved in a project, the enforcement of these minimum standards for ducts is the responsibility of the building official.

§150.0(m)2D, §150.0(m)3D

Duct systems may not use cloth-back, rubber-adhesive duct tape (typical, “old fashion”, non-rated duct tape) unless it is installed in combination with mastic and draw bands. Note: mastic and drawbands alone are adequate for sealing most connections. Cloth back rubber adhesive duct tape would then only be used to hold the outer vapor barrier in place or for some other superfluous purpose. It alone is not adequate to serve as an air sealing method or as a mechanical connection.

The enforcement of these minimum standards is normally the responsibility of the building official; however HERS raters will also verify compliance with this requirement in conjunction with duct leakage verification.

G. Product Markings

§150.0(m)2A, §150.0(m)6

All factory-fabricated duct systems must meet UL 181 for ducts and closure systems and be labeled as complying with UL 181. Collars, connections and splices are considered to be factory-fabricated duct systems and must meet the same requirement.

Insulated flexible duct products installed to meet this requirement must include labels, in maximum intervals of 3 ft, showing the R-value for the duct

insulation (excluding air films, vapor barriers, or other duct components), based on the tests and thickness specified in §150.0(m)4 and §150.0(m)5C.

H. Dampers to Prevent Air Leakage

§150.0(m)7

Fan systems that exhaust air from the building to the outside must be provided with back draft or automatic dampers.

§150.0(m)8

Gravity ventilating systems must have an automatic or readily accessible, manually operated damper in all openings to the outside, except combustion inlet and outlet air openings and elevator shaft vents. This includes clothes dryer exhaust vents when installed in conditioned space.

I. Protection of Insulation

§150.0(m)9

Insulation must be protected from damage, including that due to sunlight, moisture, equipment maintenance, and wind but not limited to the following:

- Insulation exposed to weather must be suitable for outdoor service; for example, protected by aluminum, sheet metal, painted canvas, or plastic cover.
- Cellular foam insulation shall be protected as above or painted with a coating that is water retardant and provides shielding from solar radiation that can cause degradation of the material.

J. Ducts in Concrete Slab

Ducts located in a concrete slab must have R-6 insulation but other issues will come into play. If ducts are located in the soil beneath the slab or embedded in the slab, the insulation material should be designed and rated for such installation. Insulation installed in below-grade applications should resist moisture penetration (closed cell foam is one moisture-resistant product). Common pre-manufactured duct systems are not suitable for below-grade installations. If concrete is to be poured directly over the ducts, then the duct construction and insulation system should be sturdy enough to resist the pressure and not collapse. Insulation should be of a type that will not compress, or it should be located inside a rigid duct enclosure. The only time that common flex ducts are suitable in a below-grade application is when a channel is provided in the slab.

K. Porous Inner Core Flex Duct

§150(m)10

Over time the outer vapor barrier of flex duct can be compromised. Therefore porous inner core flex duct is not allowed.

L. Duct System Sealing and Leakage Testing

§150(m)11

Duct system sealing and leakage testing is mandatory in all climate zones. Duct systems in newly constructed single family dwellings, townhouses, and

multifamily dwellings are required to comply with the requirements. Alterations and additions to ducted systems in existing buildings in all climate zones are also required to comply with applicable maximum leakage criteria. Refer to Chapter 9 for more information on duct sealing and leakage testing for existing buildings.

Duct Leakage Testing For Multiple Duct Systems With Common Return Ducts

If there are two or more duct systems in a building that are tied together at a common return duct, then each duct system should be tested separately, including the shared portion of the return duct system in each test. Under this scenario, the portions of the second duct system that is not being tested must be completely isolated from the portions of the ducts that are being tested, so the leakage from second duct system does not affect the leakage rate from the side that is being tested.

The diagram below represents the systems that are attached to a shared return boot or remote return plenum. In this case, the point in the return system that needs to be blocked off is readily accessible through the return grille.

The “duct leakage averaging” where both system are tested together as though it is one large system and divide by the combined tonnage to get the target leakage may not be used as it allows a duct system with more the 6% leakage to pass if the combined system’s leakage is 6% or less.

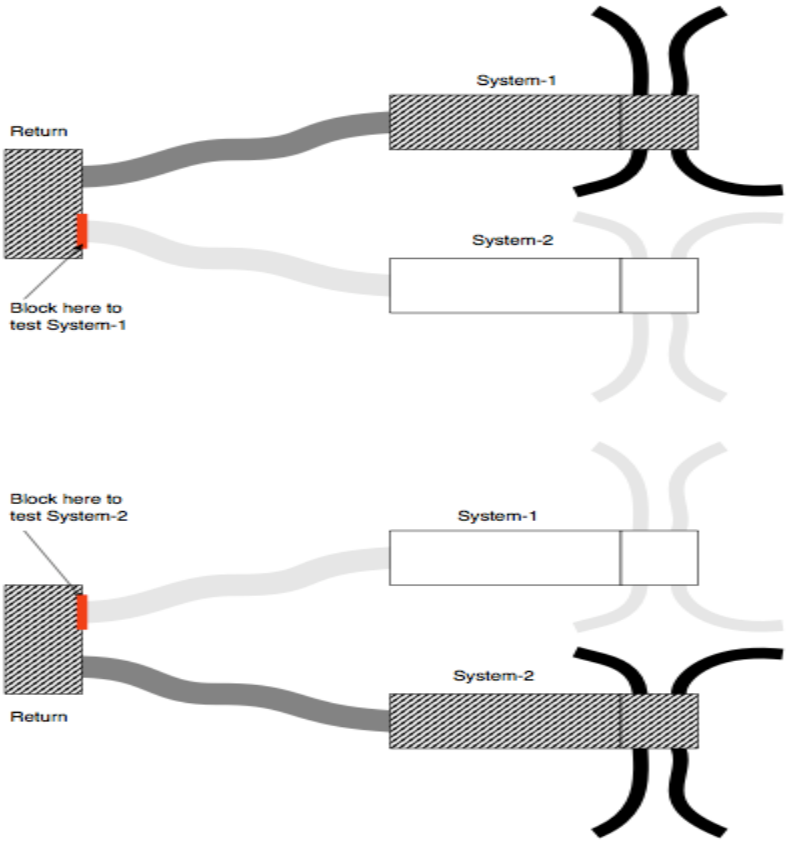

Figure 4–3- Two Duct Systems with a Common Return Duct

M. Air Filtration

§150.0(m)12

Air filtration is present in forced air systems to protect the equipment and may provide health benefits to occupants of the building. In addition to filtering particulates from the airstream filters add flow resistance to the forced air system, potentially lowering the efficiency of the heating/cooling equipment. Flow resistance is measured as a pressure drop at a specific airflow.

Except for evaporative coolers, any mechanical forced air heating and/or cooling system with more than 10 feet of duct must meet four sets of criteria:

1. System Design Criteria:

   a) All recirculated and outdoor air passing through the heating/cooling device must first pass through the filter.

   b) The system design must accommodate the pressure drop through the filter at the designed airflow. In order to accomplish this, the design airflow and the design pressure drop through the filter must be determined by the designer. The design pressure drop will determine the size and depth of the filter media required for the device (return filter grill or filter rack).

c) If the system design elects compliance utilizing the Return Duct Design alternative specified in Tables 150.0-C and D, then the designer must assume a design filter pressure drop of 0.05 IWC at the applicable design airflow rate.

d) Replacing the filters, like for like, when they become dirty brings their resistance to airflow back to the design condition. Therefore, the filters must be located to allow access for regular service by the occupants.

e) To maintain the energy efficiency of the system it is necessary for the occupants to know which filters to select that will provide the designed airflow. Therefore, a clearly legible label, such as shown in Figure 4-6 shall be permanently placed in a location visible to a person changing the filter. As shown in Figure 4-6, the label shows the allowable maximum resistance at the airflow rate closest to the design airflow for that filter location. Figure 4-6 is an example of label for a filter location designed for 400 CFM at 0.03 IWC. Note that the standard AHRI 680 airflow values are given in 400 CFM increments. The filter media pressure drop specifications at the design airflow rates that fall between the 400 cfm increments must be determined by interpolation of the Standard 680 rating values, or by lookup methods made available by the filter media vendor or manufacturer.

AHRI 680 Standard Rating		Maintenance Instructions:
Airflow Rate (CFM)	Initial Resistance ("wc)	USE ONLY REPLACEMENT FILTERS WITH AN INITIAL RESISTANCE LESS THAN 0.032 AT 400 CFM AIRFLOW RATE
400	0.03	

Figure 4-4 – Example of Filter Location Label

2. Air Filter Media Efficiency Criteria: The filter media shall be MERV 6 or better to provide protection to the equipment and to potentially provide health benefits. Filter media that provide at least 50% particle efficiency in the 3.0–10 µm range in AHRI 680 are considered to meet the MERV 6 criterion.

3. Air Filter Media Pressure Drop Criteria: To ensure airflow for efficient heating and cooling equipment operation, the installed filter media must conform to the design pressure drop specification shown in the Filter Location Label described in item 1e above.

4. Air Filter Media Labeling Criteria: The filter device must be provided with a filter media product that has been labeled by the manufacturer to disclose performance ratings that meet both the Efficiency and Pressure drop criteria described in 2, and 3 above and as shown in the Filter Location Label described in item 1e above.

D. Forced Air System Duct Sizing, Airflow Rate and Fan Efficacy

§150.0(m)13

Adequate airflow is critical for heating and cooling equipment efficiency. Simultaneously, the watt draw of the fan producing the airflow is a portion of the efficiency. It is important to maintain adequate airflow without expending

excessive fan watts to achieve the airflow. The airflow and watt draw must be HERS verified. See Reference Residential Appendices RA3.3 for the HERS verification procedures. The prescriptive return system does not have to be HERS verified.

Except for heating only systems, systems must comply with one of the following two methods:

1. Airflow and Watt Draw measurement, and determination of Fan Efficacy.

   When using the Airflow (cfm/ton) and Fan Efficacy (Watt/cfm) method the following criteria must be met:

   a) Provide airflow through the return grilles that is equal to or greater than 350 CFM per ton of nominal cooling capacity.

   b) At the same time the fan watt draw must be less than or equal to 0.58 Watts per CFM.

   The methods of measuring the watt draw are described in Reference Residential Appendix RA3.3. They use one of three acceptable apparati:

   a) a portable watt meter,

   b) an analog utility revenue meter, or

   c) a digital utility revenue meter.

   There are three acceptable methods to determine compliance with the system airflow requirement. They are described in Reference Residential Appendix RA3.3 and use an:

   a) active or passive flow capture hood to measure the total airflow through the return grill(s), or

   b) flow grid device(s) at the return grill(s) or other location where all the central fan airflow passes through the flow grid, or

   c) fan flow meter device to perform the plenum pressure matching procedure.

   The flow grid measurement device and the fan flow meter measurement device both require access to static pressure measurements of the airflow exiting the cooling coil, which utilizes a HSPP or PSPP (Section RA3.3.1.1).

   The contractor must install either a hole for the placement of a static pressure probe (HSPP) or provide a permanently installed static pressure probe (PSPP) as shown in Figure 4-7 below and Reference Residential **Appendix RA3.3**

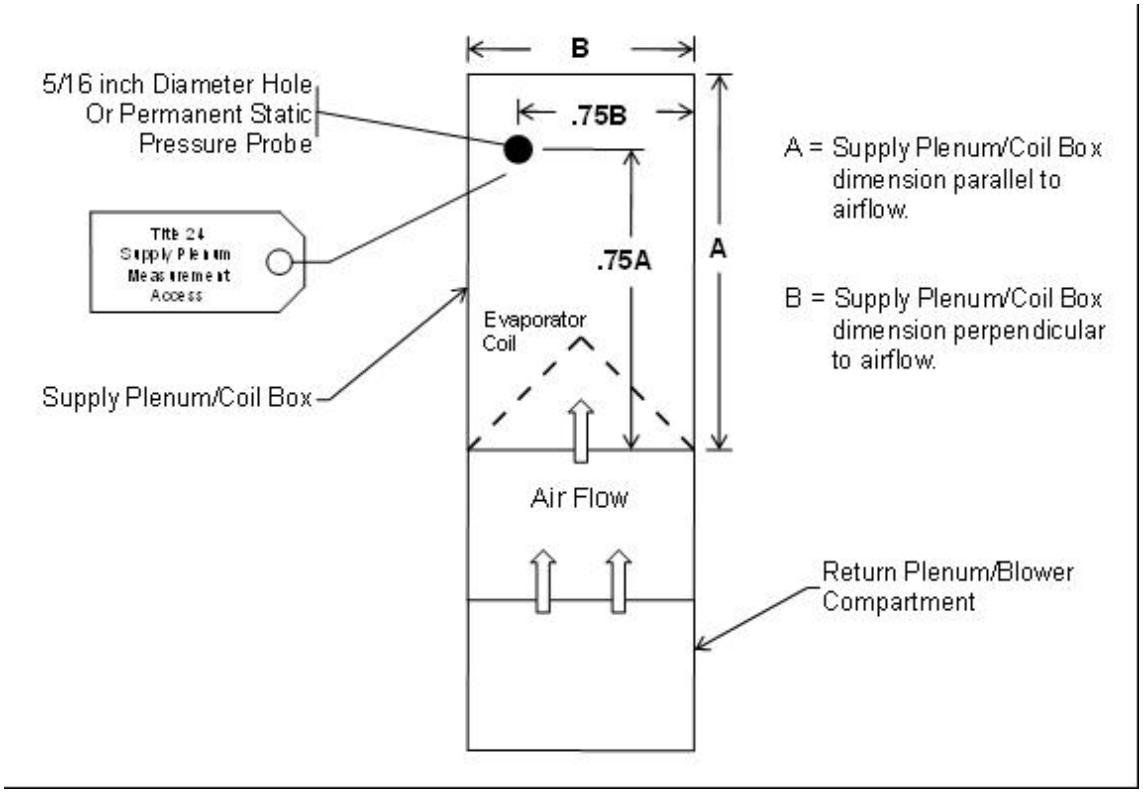

Figure 4–5 - Location of the Static Pressure Probe

The HSPP or PSPP facilitates cooling coil airflow measurement when using devices/procedures that depend on supply plenum pressure measurements.

2. Return Duct System Design Method – This method allows the designer to specify, and the contractor to install, a system that does not have to be tested for airflow and fan watt draw. This method can be used for return systems with two returns. Each return shall be no longer than 30 feet from the return plenum to the filter grille. When bends are needed, metal elbows are desirable. Each return can have up to 180 degrees of bend and no more 90 degrees of bend can be flex duct. To use this method, the designer and installer must provide return system sizing that meets the appropriate criteria in Table 150.0-C or D.

Airflow and Fan Efficacy Testing Versus Return Duct Sizing

Studies have shown that adequate airflow is critical to the efficient operation of air conditioning systems. Section 150.0(m)13B establishes mandatory requirements that are intended to ensure adequate cooling airflow through properly sized ducts and efficient fan motors.

There are two options allowed to ensure adequate air flow; option one is to design and install the systems using standard design criteria and then have the systems airflow and fan efficacy (AF/FE) tested and third-party verified in the field. The second option is to use size the return ducts according to Tables 150.0-C and D. These tables are very simplified and very conservative (the return ducts are much

larger than would normally be used). They should only be used in situations where there is a serious concern that the system will not pass the diagnostic tests for airflow and fan efficacy, such as in alterations where duct modification opportunities are limited. The first option, AF/FE testing, is always preferable, especially in new construction.

The California Green Code and the California Mechanical Code both require that residential duct systems be designed according to ACCA Manual D, or equivalent. If reasonable care and judgment is used in designing the duct system (both return and supply ducts) and the system is designed to reasonable parameters for airflow per ton, static pressure across the fan and friction rate, these systems should have no problem passing the diagnostic tests. Return ducts should not be sized according to Tables 150.0-C and D purely as a way to avoid the diagnostic testing. While undersized return ducts are very often the cause of poor airflow in many systems, they are only part of the overall system.

The following design guidelines will increase the chances of the system passing the AF/FE testing without sizing the return ducts according to Table 150.0-Cand D:

1. Right-size the HVAC system; if a 3-ton unit is enough to satisfy the cooling load, do not install a 4-ton unit “just to be safe”. Oversizing equipment can cause comfort problems in addition to excessive energy use.
2. The HVAC designer must coordinate closely with the architect and structural engineer to make sure that the ducts will fit into the home as designed.
3. Prepare a detailed mechanical plan that can be followed in the field. If deviations must occur in the field, make sure that they are coordinated with the designer and that the design is adjusted as needed.
4. Follow Manual D for duct sizing:
   a. Make sure that the correct duct type is being used (vinyl flex, sheet metal, rigid fiberglass, etc.).
   b. Make sure that all equivalent lengths and pressure drops are correctly accounted for (bends, plenum start collars, t-wyes, filters, grilles, registers, etc).
   c. Select a furnace that will provide at least 400 cfm/ton at the desired static pressure of 125 to 150 Pa (0.5 to 0.6 inches w.c.).
   d. Design the duct system to a static pressure across the fan of no more than 150 Pa (0.6 inches w.c.).
   e. Consider upsizing the evaporator coil relative to the condenser to reduce the static pressure drop. This results in better airflow and slightly better capacity and efficiency. Manufacturers commonly provide performance data for such condenser coil combinations.
   f. Consider specifying an air handler with a better quality fan motor.
5. Install a large grill area and use proper filter for the system; using a higher MERV filter than needed unnecessarily increases the static pressure.
6. Locate registers and equipment to make duct runs as short as possible.
7. Make all short-radius 90 Degree bends out of rigid ducting.
8. Install flex duct properly by: stretching all flex duct tight and cut off excess ducting, ensure the duct is not kinked or compressed, ensure flex duct is properly supported every four feet or less using one inch strapping having

less than two inches of sag between supports.

Consider using better quality supply and filter grills. “Bar-type” registers have considerably better airflow performance than standard stamped-face” registers. Refer to manufacturer’s specifications and select accordingly.

Note that Standards Tables 150.0-C and D (Tables 4-10, 4-11, 4-12) only allow for one or two returns. There may be times where three returns are necessary on a single system. Furthermore, Table 150.0-D does not allow for deviation from the two sizes specified. For example, the table requires two 16” return ducts for a 3.5-ton system, but specific airflow requirements and architectural constraints may dictate something more like a 20” and a 14”. In this situation, the designer would have to rely on standard engineering principles and trust their design to pass the diagnostic tests.

Having adequate room to run properly sized ducts has always been an issue. Historically, duct systems have been sized to fit into the home at the expense of proper airflow. The performance of these systems, in terms of efficiency and capacity, has suffered greatly because of this practice; it is the intent of these standards to change these practices; the home should be designed to accommodate properly sized ducts. This requires improved coordination between the architect, structural engineer, and mechanical designer earlier in the process. This is not “best practice”, this is simply good design.

It is also important to notice that the tables require that the return grilles be sized to achieve a reasonable face velocity and static pressure drop. Return grille devices must also be labeled in accordance with the requirements in section 150.0(m)12A to disclose the grille's design airflow rate and a maximum allowable clean-filter pressure drop of 12 Pa (0.05 inches water) for the air filter media.

Return Duct Sizing Example:

The mechanical contractor for a new home submitted the following mechanical design to the builder. It was designed using typical design specifications (400 cfm/ton at 125 Pa (0.5” wc), friction rate = 0.1, etc.). The system is has 4-ton condenser and the airhandler is rated for 1600 cfm.

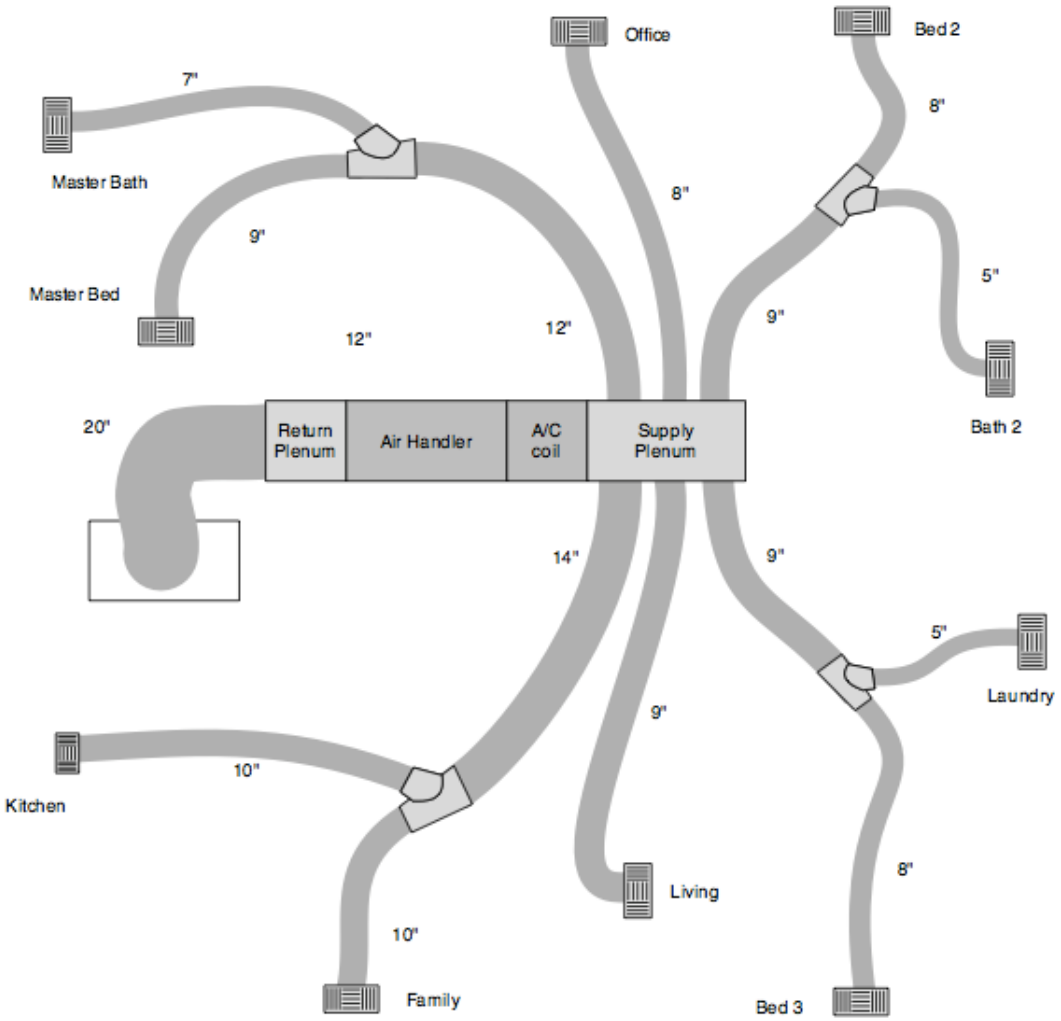

Figure 4-6 - Return Duct Design Option 1

Because the builder has specified a low-end air handler, he is concerned that the system may not pass the mandatory diagnostic testing requirement for airflow and fan efficacy. The builder requests that the system be re-designed with the return ducts sized according to Table 150.0-D. The following layout is the re-designed system. The only change is that the system now has two 18” return ducts and two filter grilles sized according to Table 150.0-D, rather than a single 20” return duct and a filter grilled sized according to the manufacturer’s specifications for 1600 cfm. Note that because one of the return ducts had more than one 90 degree bend, one of the bends is required to be a metal elbow (to be insulated). The two return filters are 20”x30” each and are rated by the manufacturer to show that they have a pressure drop of less than 125 Pa (0.5” w.c.) at 800 cfm each.

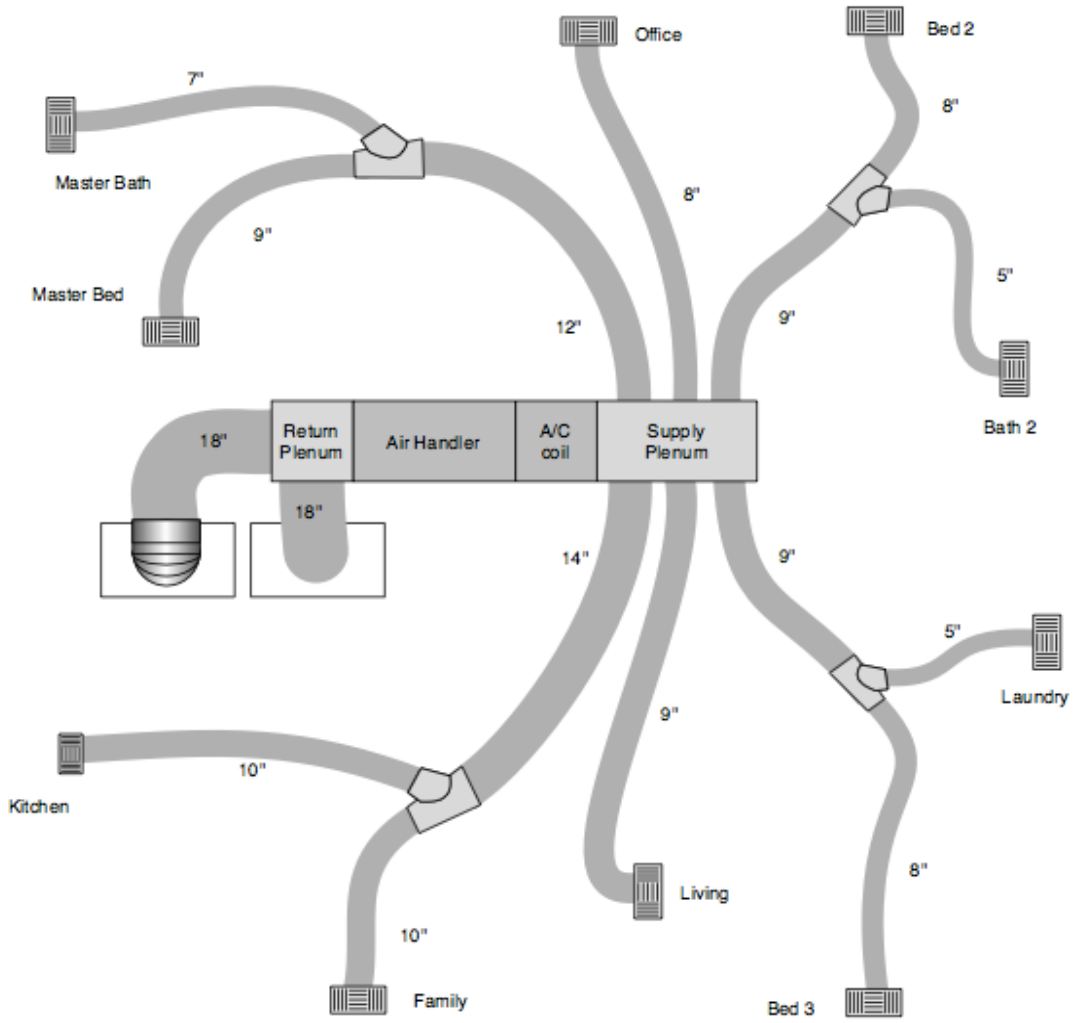

Figure 4-7 - Return Duct Design Option 2

Table 4-10 – (Standards Table 150-C): Return Duct Sizing for Single Return Duct Systems

System Nominal Capacity (Tons)	Minimum Return Duct Diameter (inch)	Minimum Total Return Filter Grille Gross Area (Inches)
1.5	16	500
2.0	18	600
2.5	20	800

Table 4-11 – (Standards Table 150-D): Return Duct Sizing for Multiple Return Duct Systems

Two Returns			
System Nominal Tonnage	Return 1 Minimum Duct Diameter (inches)	Return 2 Minimum Duct Diameter (inches)	Minimum Gross Filter Grille Face Area (sq. in.)
1.5	12	10	500
2.0	14	12	600
2.5	14	14	800
3.0	16	14	900
3.5	16	16	1000
4.0	18	18	1200
5.0	20	20	1500

N. Zonally Controlled Central Forced Air Cooling Systems

§150(m)15

The primary purpose of zoning ducted air conditioners, heat pumps, and furnaces is to improve comfort. Increased comfort is attained by having the capacity of the HVAC system (cooling or heating delivered) follow the shift in load as it changes across the house. For example, it is common for two-story homes to be too hot on the second floor in both summer and winter. Zoning has the capability of diverting more of the HVAC capacity to the area with the increased load. Another common example is a home with a significant area of west-facing and east-facing windows. In the summer, the east rooms overheat in the morning and the west rooms overheat in the afternoon.

Providing the most agreeable temperature to all the zones is comfortable, but it carries with it the distinct possibility of increased energy consumption. Since the most common home is single zoned and has only one thermostat placed near the center of the house, temperatures in the rooms distant from that thermostat will vary, sometimes significantly. If zoning is added, the more distant rooms may be conditioned to a more comfortable temperature. This increased conditioning requires more energy.

It is common for zonally controlled central forced air cooling systems to produce lower airflow through the returns thus lowering the sensible efficiency of the heating or cooling equipment. There are two primary methods by which the common multi-zoned dampered system lowers airflow: additional restriction of zoning dampers and recirculation through the air conditioner from a bypass duct. To avoid this efficiency problem, zonally controlled central forced air cooling systems utilizing a single speed air conditioner must simultaneously meet the following criteria;

a In every zonal control mode, the system shall provide airflow through the return grilles that is equal to or greater than 350 CFM per ton of nominal cooling capacity.

b In every zonal control mode, the fan watt draw must be less than or equal to 0.58 Watts per CFM.

The airflow and fan watt draw must be HERS verified. See Reference Residential Appendix RA3.3 for the HERS verification procedures.

Zonally controlled central forced air cooling systems with multi-speed or variable speed compressors only need to be verified to meet the above 350

CFM per nominal ton and 0.58 Watts per CFM criteria with the compressor on high speed and all zones calling for cooling.

O. Zoned Systems and Airflow and Fan Efficacy Requirements

Recent studies have shown that zoned systems (multiple zones served by a single air handler with motorized zone dampers), with or without bypass dampers, usually do not meet the AF/FE requirements when less than all zones are calling. The energy penalty that results from this is greater than the benefit of having zonal control, therefore zonal control is no longer simply assumed to be a "better than minimum" condition and there are special compliance requirements for them. Note that zonal control accomplished by using multiple single-zone systems is not subject to these requirements.

There are two choices for modeling zoned systems. One is for air conditioning condensers that have single speed compressors and the other is for condensers that have "multi-speed" compressors. Two Speed and Variable Speed Compressors are considered multi-speed. Multi-speed compressors alleviate the detrimental effects of not meeting the AF/FE when less than all zones are calling and are given special consideration when used in zoned systems. They are assumed to offset the negative impacts of zoned systems and airflow and fan efficacy testing is only required to be performed in the highest speed with all zones calling, while zoned systems with single speed compressors must be tested and pass in all operating modes.

Because zoned systems, with or without bypass dampers, are less likely to meet the AF/FE requirements when less than all zones are calling, a way is provided in the performance compliance option to take this penalty and still allow use of zone dampers. Other energy features must offset the penalty. In the performance compliance software, if the system is modeled as a zoned system with a single speed compressor, the default airflow drops to 150 CFM/ton. Note that the standard house is assumed to have an airflow of 350 CFM/ton, so there is definitely a penalty unless the user specifies a value of 350 or higher. Entering a value between 150 and 350 can lessen the penalty.

It is extremely important that the energy consultant model airflow and fan efficacy values that are reasonable and obtainable, otherwise they will fail in the field and will need to be remodeled at actual values. Energy consultants should coordinate with the HVAC designer prior to registering the Certificate of Compliance.

Note: Bypass dampers may only be installed if the Certificate of Compliance specifically states that the system was modeled as having a bypass damper.

Example:

1. A home is to be built with a zoned system (2-zones) with a single speed compressor and bypass ducts. From experience, the HVAC contractor knows that it will not be possible to meet the 350 CFM/ton requirement, but 275 CFM/ton is likely.
2. The energy consultant models the system in the proposed house with 275 CFM/ton (better than default) and 0.58 W/CFM (default). Because the standard house assumes 350 CFM/ton there is an energy penalty that must be made up

with other better-than-standard features, but it is not nearly as bad as it would be at the default of 150 CFM/ton.

3. Because 275 CFM/ton is better than the default of 150, it must be tested in all zonal control modes. Because the modeled fan efficacy is the default value, it needs only to be tested with all zones calling. If a better than default value was modeled for fan efficacy it would need to be tested in all zonal control modes.

4. The home is built and the system is verified by a rater and passes at 287 CFM/ton with one zone calling, 298 CFM/ton with the other zone calling, and 372 CFM/ton with both zones calling. Note that it must still meet the mandatory requirements of 350 cfm/ton with all zones calling.

5. If this same home was to be built with a multi-speed compressor, it would only have to be tested with both zones calling whether or not it has a bypass damper, but the target airflow would be no less than 350 CFM/ton. Compliance credit can be achieved by modeling airflows greater than 350 CFM/ton and/or fan efficacies less than 0.58 watts/CFM.

Table 4-12 – Single Zone Ducted Central Forced Air Cooling Systems

Single-Zone Ducted Cooling Systems (Single Zone Off of a Single Air Handler)			
Compressor Type	Mandatory Requirements for Airflow and Fan Efficacy	Performance Compliance Option	
		Proposed House Defaults	Modeled Improved Airflow and/or Fan Efficacy
Single Speed	Airflow ≥ 350 CFM/ton, and	350 CFM/ton	Airflow ≥350 CFM/ton
Two Speed or Variable Speed (Testing Performed on Highest Speed only)	Fan Efficacy ≤.58 W/CFM (Airflow and Fan Efficacy testing not required if Return System Sized to Tables 150.0-C or D, but verification of sizing is required)	and 0.58 W/CFM	and/or Fan Efficacy ≤0.58 W/CFM

Table 4-13 – Zonally Controlled Central Forced Air Cooling Systems

Zoned Ducted Cooling Systems (Multiple Zones Off of a Single Air Handler)			
Compressor Type	Mandatory Requirements for Airflow and Fan Efficacy [1]	Performance Compliance [2]	
		Proposed House Defaults [3]	Modeled Improved Airflow and/or Fan Efficacy
Single Speed	Airflow ≥ 350 CFM/ton and Fan Efficacy ≤ 0.58 W/ CFM (For Prescriptive Compliance Method, verification is mandatory in all zonal control modes. For Performance Compliance Method, verification is mandatory using highest capacity with all zones calling)	150 CFM/ton and 0.58 W/CFM	Airflow ≥ 150 CFM/ton and/or Fan Efficacy ≤ 0.58 W/CFM (Verification of better-than-default values required in all zonal control modes. Mandatory requirement of 350 CFM/ton and 0.58 W/CFM still applies for all zones calling)
Two Speed or Variable Speed	Airflow ≥ 350 CFM/ton and Fan Efficacy ≤ 0.58 W/ CFM (Verification Required Only on Highest Capacity and with All Zones Calling)	350 CFM/ton and 0.58 W/CFM	Airflow ≥ 350 CFM/ton and/or Fan Efficacy ≤ 0.58 W/CFM (Verification of modeled improved values required only on Highest Capacity and with All Zones Calling)

For the Prescriptive Compliance Method, all Mandatory Requirements for airflow and fan efficacy must be met, and use of a bypass duct is not allowed.

[2] For the Performance Compliance Method, all Mandatory Requirements for airflow and fan efficacy must be met, and use of a bypass duct may be specified in the compliance software input for the zoned system type.

[3] The Standard House Defaults for all cases are 350 CFM/ton and 0.58 W/CFM.

P. Indoor Air Quality and Mechanical Ventilation

§150.0(o)

See Section 4.6 of this chapter for details.

4.4.1 Prescriptive Requirements for Air Distribution System Ducts, Plenums, and Fans

A. Duct Insulation

§150.1(c)9

All ducts shall either be in directly conditioned space as confirmed by field verification and diagnostic testing in accordance with RA3.1.4.3.8 (leakage to outside) or be insulated to a minimum installed level as specified by Table 150.1-A, which requires either R-6 or R-8 depending on the climate zone.

(Climate zones 1-10, 12, and 13 require R-6 and climate zones 11, and 14-16 require R-8.) Since R-6 is the mandatory minimum, only the R-8 requirement can be opted out of by using the performance approach and trading off the energy penalty against some other features.

B. Central Fan Integrated (CFI) Ventilation

There is a prescriptive requirement for ducted systems that have cooling and a CFI ventilation system to have the fan efficacy verified. This can be opted out of using the performance approach.

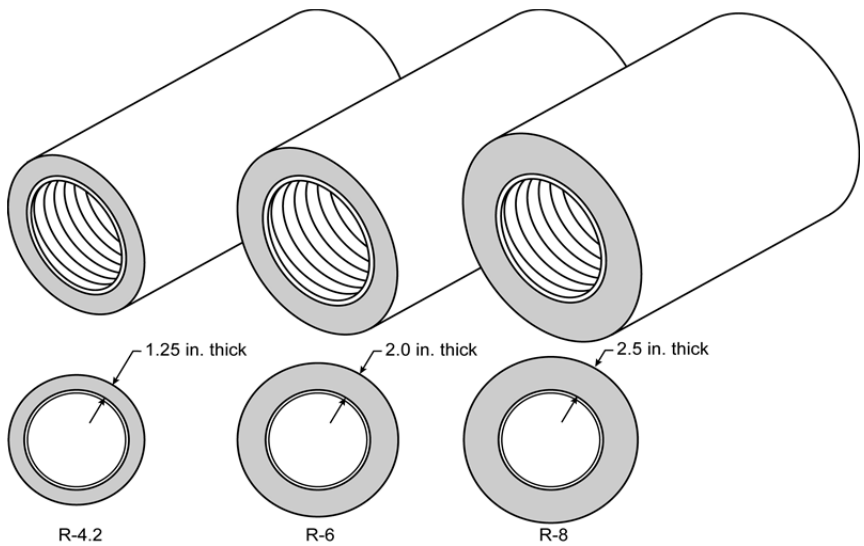

Figure 4-8 – R-4.2, R-6, and R-8 Ducts

4.4.2 Compliance Options for Air Distribution System Ducts, Plenums, and Fans

The Standards provide credit for several compliance options related to duct design and construction..

A. System Airflow and Fan Efficacy

A performance compliance credit is available for demonstrating the installation of a high efficiency fan and duct system with better performance than the mandatory requirement of 350 cfm/ton and 0.58 watts/cfm. This credit can be achieved by selecting a unit with a high efficiency air handler fan and/or careful attention to efficient duct design. The performance compliance method allows the user's proposed fan power to be entered into the program, and credit will be earned if it is lower than the default of 0.58 watts per CFM of system airflow. To obtain this credit, the system airflow must meet the prescriptive requirements of at least 350 CFM/ton of nominal cooling capacity. After installation, the contractor must test the actual fan power of each system using the procedure in *Reference Residential Appendix* RA3.3, and show that it is equal or less than what was proposed in the compliance software analysis.

The watt draw and airflow must also be verified by a HERS rater.

B. Supply Duct Location

There are three ways to achieve credit for favorable duct location when using the performance compliance method.

First, credit is available if no more than 12 LF (linear feet) of supply duct are outside conditioned space. This total must include the air handler and plenum length. This credit results in a reduction of duct surface area in the computer compliance programs. This option requires certification by the installer and field verification by a HERS rater.

The second alternative applies when 100 percent of the ducts are located in conditioned space. This credit results in eliminating the conduction losses associated with both the return and supply ducts, however, leakage rates still applies. This option requires field verification of the duct system by means of a visual inspection by a HERS rater.

Third, credit for a high efficiency duct design is available through the Diagnostic Supply Duct Location, Surface Area, and R-value compliance option, which is described below. This option requires field verification of the duct design layout drawing(s) by a HERS rater. Verified duct design, when required, will be included in the HERS Required Verification list on the Certificate of Compliance (CF1R). This approach provides energy savings credits for having shorter duct runs, fewer ducts, ducts in beneficial locations of ductwork and other benefits of a well designed duct system.

There is no compliance credit provided for choosing a heating system such as a wall furnace, floor heater, or room heater even though those systems typically have no ducts. For these cases, the standard design in the compliance calculation uses the same type of system and also has no ducts. However, other systems, such as hydronic heating systems with a central heater or boiler and multiple terminal units, are considered central HVAC systems that are compared to a ducted system in the Standard Design. If the hydronic system has no ducts, there may be a significant energy credit through the performance method.

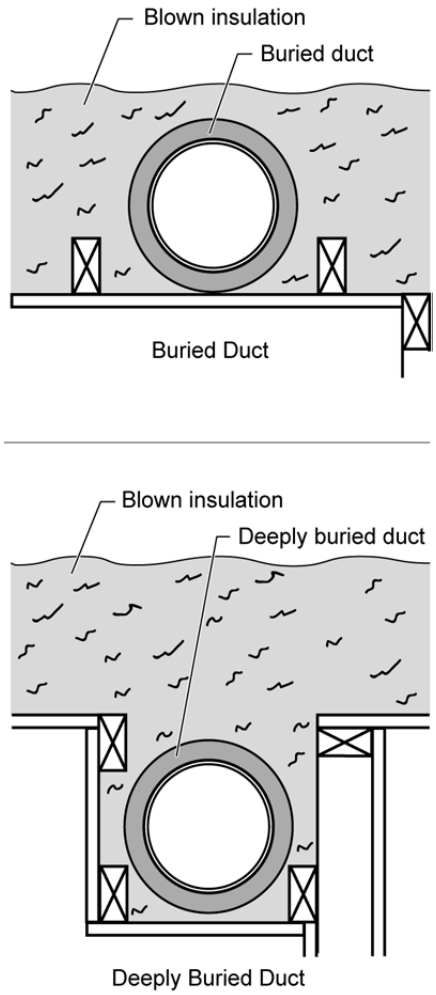

Figure 4-9 – Example: Buried Ducts on Ceiling and Deeply Buried Ducts

C. Duct Insulation

Performance credit is also available if all of the ducts are insulated to a level higher than required by the prescriptive package. If ducts with multiple R-values are installed, the lowest duct R-value must be used for the entire duct system. However, the air handler, plenum, connectors, and boots can be insulated to the mandatory minimum R-value.

As an alternative when there is a mix of duct insulation R-values, credit is available through the method described in the next section.

D. Diagnostic Supply Duct Location, Surface Area, and R-value

This compliance option allows the designer to take credit for a high efficiency duct design that incorporates duct system features that may not meet the criteria for the duct location and/or insulation compliance options described above. This method requires that the designer must enter the design characteristics of all supply ducts that are not located within conditioned space. The information required for the input to the compliance software includes the length, diameter, insulation R-value, and location of all supply ducts. This method will result in a credit if the proposed duct system is better

than the standard design, which exactly meets the prescriptive insulation requirement and has supply duct surface area set at 27 percent of floor area.

In order to claim this credit, the duct system design must be documented on plans that are submitted to the enforcement agency and posted at the construction site for use by the installation persons, the enforcement agency field inspector, and the HERS rater. The duct system must be installed in accordance with the approved duct system plans, and the duct system installation must be certified by the installer on the CF2R form and verified by a HERS rater on the CF3R form. Details of this compliance option are described in Section 3.12.3 of the Residential ACM Reference Manual, and verification procedures are described in RA3.1 of the Reference Residential Appendix.

E. Buried and Deeply Buried Ducts

This compliance option also allows credit for the special case of ducts that are buried by blown attic insulation. For ducts that lie on the ceiling (or within 3.5 inch of the ceiling), the effective R-value is calculated based on the duct size and the depth of ceiling insulation as shown in Table R3-38 in the Residential ACM Manual. This case is referred to as “Buried Ducts on the Ceiling”. For the case of Deeply Buried Ducts, which are ducts that are enclosed in a lowered portion of the ceiling and completely covered by attic insulation, then the effective R-value allowance in the compliance calculations is R-25 when the attic insulation is fiberglass and R-31 for cellulose attic insulation. In order to take credit for buried ducts, the system must meet the verified duct design criteria described above, be diagnostically tested for duct sealing compliance by a HERS rater according to Reference Residential Appendix RA3.1, and meet the requirements for high insulation installation quality described in Reference Residential Appendix RA3.5. Verified minimum airflow (350 cfm/ton or higher if higher is specified on the CF1R) is required when a measure is selected for compliance that has a verified duct design as a prerequisite.

F. Ducts in Attics with Radiant Barriers

Installation of a radiant barrier in the attic increases the duct efficiency by lowering attic summer temperatures. Compliance credit for radiant barriers requires listing of the radiant barrier in the Special Features and Modeling Assumptions in order to aid the local enforcement agency’s inspections. Compliance credit for a radiant barrier does not require HERS rater verification.

4.4.3 Duct Installation Standards

The mandatory duct construction measures referenced in Section 4.4.1 above state that duct installations must comply with 2007 California Mechanical Code Sections 601, 602, 603, 604, 605, and the applicable requirements of the 2013 California Building Energy Efficiency Standards. Some of the highlights of these requirements are listed in this section along with some guidance for recommended quality construction practice.

A. Tapes and Clamps

All tapes and clamps must meet the requirements of §150.0(m).

Cloth-back rubber-adhesive tapes must be used only in combination with mastic and draw bands, or have on its backing the phrase "CEC approved," a drawing of a fitting to plenum joint in a red circle with a slash through it (the international symbol of prohibition), and a statement that it cannot be used to seal fittings to plenums and junction box joints.

B. All Joints Must Be Mechanically Fastened

For residential round metal ducts, installers must overlap the joint by at least 1½ inch and use three sheet metal screws equally spaced around the joint (see Figure 4-10).

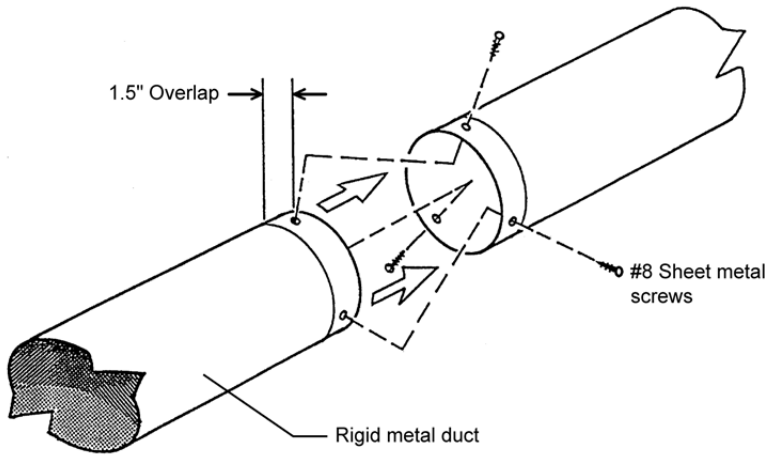

Source: Richard Heath & Associates/Pacific Gas & Electric

Figure 4-10 – Connecting Round Metallic Ducts

For round non-metallic flex ducts, installers must insert the core over the metal collar or fitting by at least 1 in. This connection may be completed with either mesh, mastic and a clamp, or two wraps of tape and a clamp.

For a mesh and mastic connection, the installer must first tighten the clamp over the overlapping section of the core, apply a coat of mastic covering both the metal collar and the core by at least 1 in., and then firmly press the fiber mesh into the mastic and cover with a second coat of mastic over the fiber mesh (see Figure 4-11).

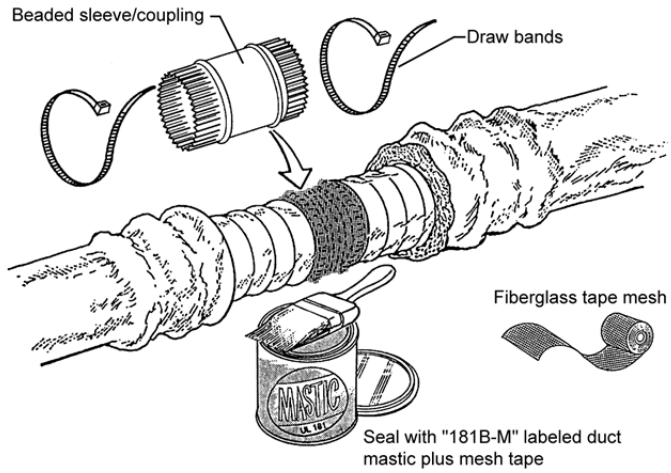

Source: Richard Heath & Associates/Pacific Gas & Electric

Figure 4-11 – Connecting Flex Ducts Using Mastic and Mesh

For the tape connection first apply at least two wraps of approved tape covering both the core and the metal collar by at least 1 inch, then tighten the clamp over the overlapping section of the core (see Figure 4-12).

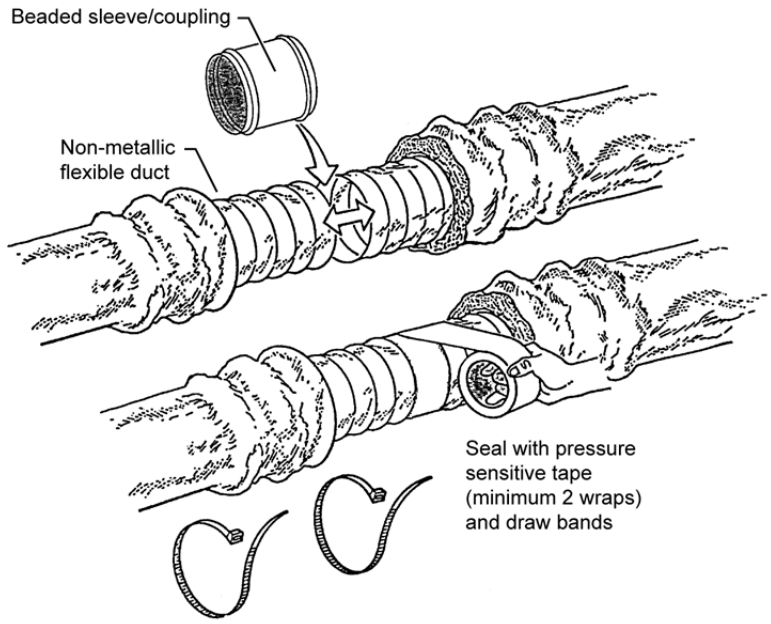

Source: Richard Heath & Associates/Pacific Gas & Electric

Figure 4-12 –Connecting Flex Ducts Using Tape and Clamps

C. All Joints Must Be Made Airtight (§150(m))

Seal joints with mastic, tape, aerosol sealant, or other duct-closure system that meets the applicable requirements of UL 181, UL 181A, UL 181B, or UL 723. Duct systems shall not use cloth-back, rubber-adhesive duct tape regardless of UL designation, unless it is installed in combination with mastic and clamps. The Energy Commission has approved three cloth-back duct tapes with special butyl synthetic adhesives rather than rubber adhesive to

seal flex duct to fittings. These tapes are:

- Polyken 558CA, Nashua 558CA, manufactured by Berry Plastics Tapes and Coatings Division and
- Shurtape PC 858CA, manufactured by Shurtape Technologies, Inc.

These tapes passed Lawrence Berkeley Laboratory tests comparable to those that cloth-back rubber-adhesive duct tapes failed (the LBNL test procedure has been adopted by the American Society of Testing and Materials as ASTM E2342-03). These tapes are allowed to be used to seal flex duct to fittings without being in combination with mastic. These tapes cannot be used to seal other duct system joints, such as the attachment of fittings to plenums and junction boxes. These tapes have on their backing a drawing of a fitting to plenum joint in a red circle with a slash through it (the international symbol of prohibition) to illustrate where they are not allowed to be used, and installation instructions in their packing boxes that explain how to install them on duct core to fittings and a statement that the tapes cannot be used to seal fitting to plenum and junction box joints.

Mastic and mesh should be used where round or oval ducts join flat or round plenums (see Figure 4-13).

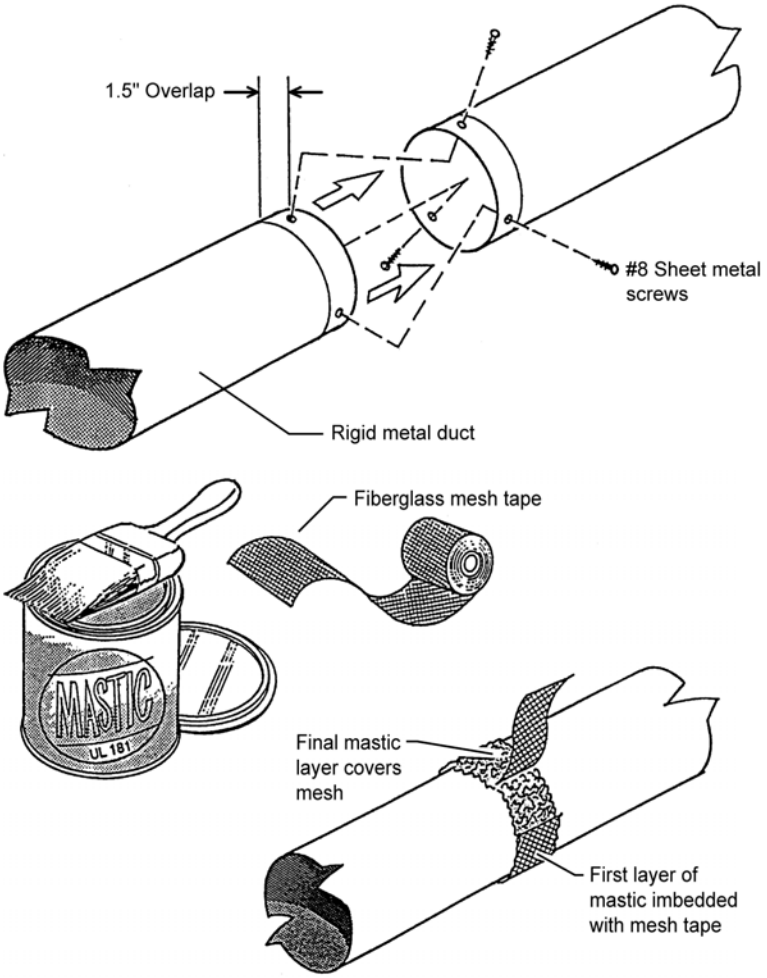

Source: Richard Heath & Associates/Pacific Gas & Electric

Figure 4-13 – Sealing Metallic Ducts with Mastic and Mesh

All ducts must be adequately supported.

Both rigid duct and flex duct may be supported on rigid building materials between ceiling joists or on ceiling joists.

For rigid round metal ducts that are suspended from above, hangers must occur 12 ft apart or less (see Figure 4-14).

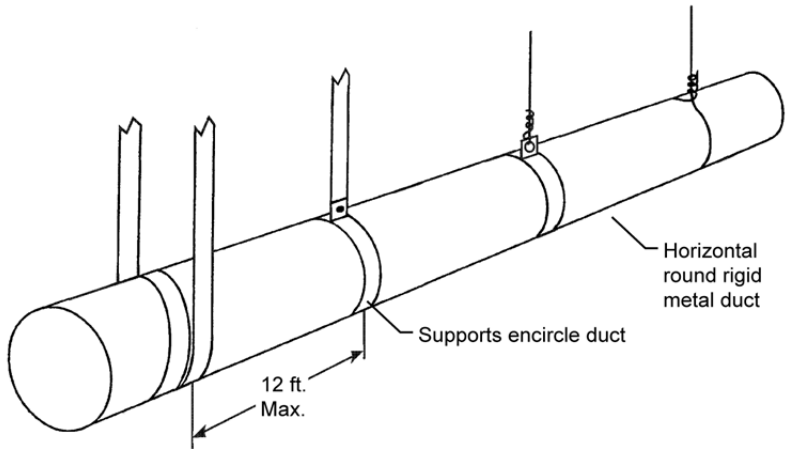

Source: Richard Heath & Associates/Pacific Gas & Electric

Figure 4-14 – Options for Suspending Rigid Round Metal Ducts

For rectangular metal ducts that are suspended from above, hangers must occur at a minimum of 4 ft to 10 ft depending on the size of the ducts (see Table 6-2-A in Appendix A of the 2007 California Mechanical Code). Refer to Figure 4-15.

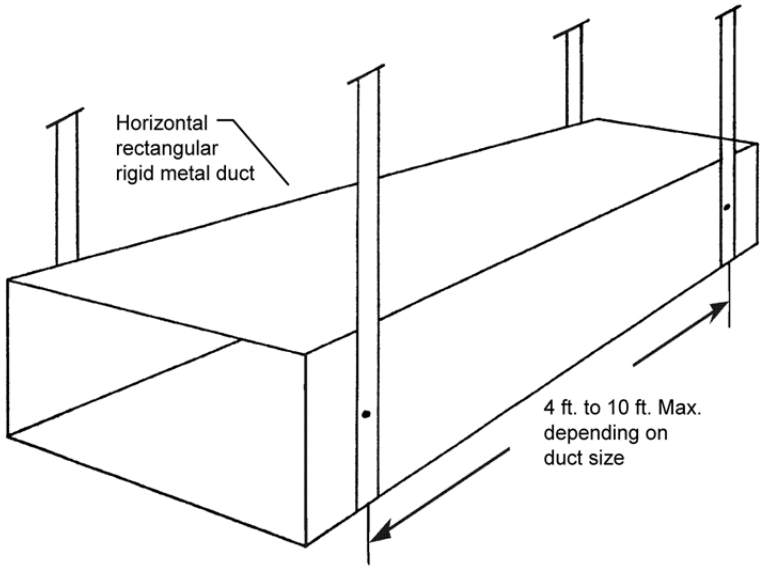

Source: Richard Heath & Associates/Pacific Gas & Electric

Figure 4-15 – Options for Suspending Rectangular Metal Ducts

For flex ducts that are suspended from above, hangers must occur at 4 ft apart or less and all fittings and accessories must be supported separately by hangers (see Figure 4-16).

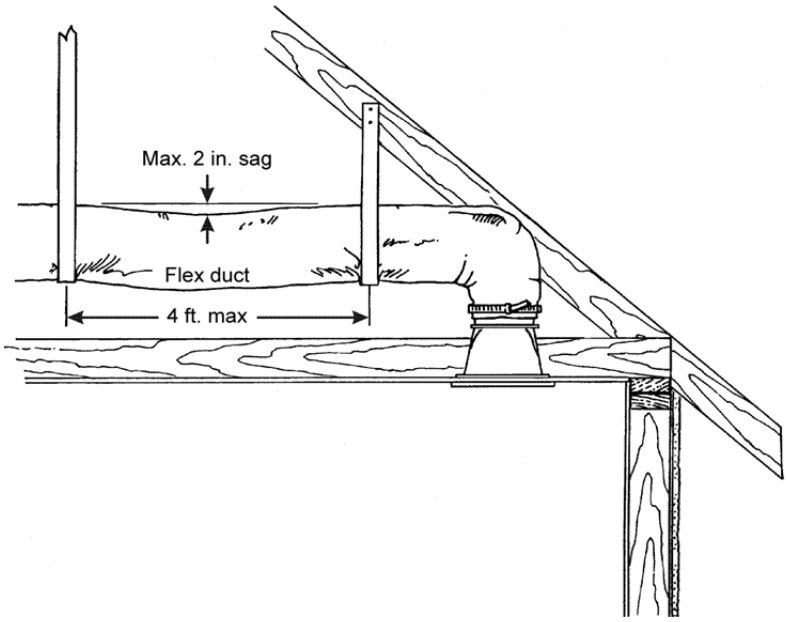

Source: Richard Heath & Associates/Pacific Gas & Electric

Figure 4-16 – Minimum Spacing for Suspended Flex Ducts

For vertical runs of flex duct, support must occur at 6 ft intervals or less (see Figure 4-17)

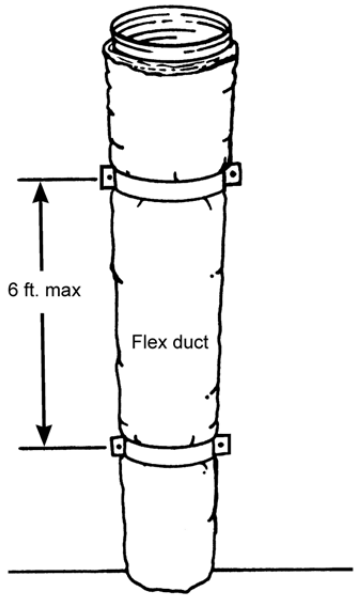

Source: Richard Heath & Associates/Pacific Gas & Electric

Figure 4-17 – Minimum Spacing for Supporting Vertical Flex Ducts

The routing and length of all duct systems can have significant impacts on system performance due to possible increased airflow resistance. The Energy Commission recommends using the minimum length of duct to make connections and the minimum possible number of turns.

For flexible duct, the Energy Commission recommends fully extending the duct by pulling the duct tight and cutting off any excess duct and avoiding bending ducts across sharp corners or compressing them to fit between framing members (see Figure 4-18). Also avoid incidental contact with metal fixtures, pipes, or conduits or installation of the duct near hot equipment such as furnaces, boilers, or steam pipes that are above the recommended flexible duct use temperature.

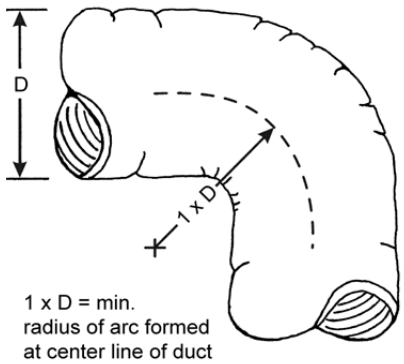

Source: Richard Heath & Associates/Pacific Gas & Electric

Figure 4-18 – Minimizing Radius for Flex Duct Bends

All joints between two sections of duct must be mechanically fastened and substantially airtight. For flex duct this must consist of a metal sleeve no less than 4 inch in length between the two sections of flex duct.

All joints must be properly insulated. For flex ducts this must consist of pulling the insulation and jacket back over the joint and using a clamp or two wraps of tape.

Aerosol sealant injection systems are an alternative that typically combines duct testing and duct sealing in one process. Figure 4-19 shows the computer-controlled injection fan temporarily connected to the supply duct. The plenum is blocked off by sheet metal to prevent sealant from entering the furnace. Supply air registers are also blocked temporarily to keep the sealant out of the house. Note that ducts must still be mechanically fastened even if an aerosol sealant system is used.

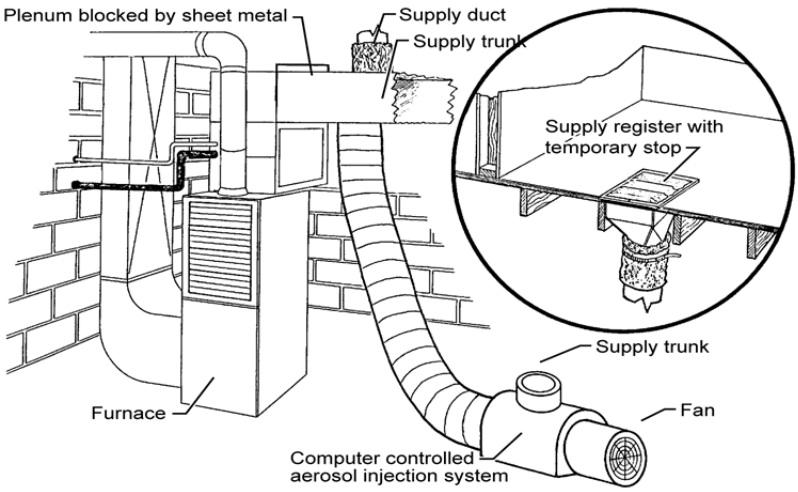

Source: Richard Heath & Associates/Pacific Gas & Electric

Figure 4-19 – Computer-Controlled Aerosol Injection System

4.5 Controls

4.5.1 Thermostats

Automatic setback thermostats can add both comfort and convenience to a home. Occupants can wake up to a warm house in the winter and come home to a cool house in the summer without using unnecessary energy.

§110.2(c), §150.0(i)

A thermostat is always required for central systems whether the prescriptive or performance compliance method is used. An exception is allowed only if:

(1) the building complies using a computer performance approach with a non-setback thermostat; and

(2) the system is one of the following non-central types:

1. Non-central electric heaters
2. Room air conditioners

3. Room air conditioner heat pumps
4. Gravity gas wall heaters
5. Gravity floor heaters
6. Gravity room heaters
7. Wood stoves
8. Fireplace or decorative gas appliances

When it is required, the setback thermostat must have a clock or other mechanism that allows the building occupant to schedule the heating and/or cooling set points for at least four periods over 24 hours.

If more than one piece of heating equipment is installed in a residence or dwelling unit, the set-back requirement may be met by controlling all heating units by one thermostat or by controlling each unit with a separate thermostat. Separate heating units may be provided with a separate on/off control capable of overriding the thermostat.

§110.2(b)

Note that thermostats for heat pumps must be “smart thermostats” that minimize the use of supplementary electric resistance heating during startup and recovery from setback, as discussed earlier in the heating equipment section.

Example 4-1

Question

Am I exempt from the requirement for a thermostat if I have a gravity wall heater or any of the equipment types listed in the exception to §110.2(c)?

Answer

The answer depends on the compliance approach. Under the prescriptive approach, Exception to §110.2(c) exempts gravity wall, floor and room heaters from the thermostat requirements. However, under the performance approach, the exception requires that “the resulting increase in energy use due to the elimination of the thermostat shall be factored into the compliance analysis”. This means that under the performance scenario, if the building is modeled with a non-setback thermostat, any energy lost because of this will have to be made up using other efficiency features.

4.5.2 Zonal Control

An energy compliance credit is provided for zoned heating systems, which save energy by providing selective conditioning for only the occupied areas of a house. A house having at least two zones (living and sleeping) may qualify for this compliance credit. The equipment may consist of one heating system for the living areas and another system for sleeping areas or a single system with zoning capabilities, set to turn off the sleeping areas in the daytime and the living area unit at night (see Figure 4-20).

There are unique eligibility and installation requirements for zonal control to qualify under the Standards. The following steps must be taken for the building to show compliance with the Standards under this exceptional method:

1. **Temperature Sensors**. Each thermal zone, including a living zone and a sleeping zone, must have individual air temperature sensors that provide accurate temperature readings of the typical condition in that zone.
2. **Habitable Rooms**. For systems using central forced air or hydronic heating each habitable room in each zone must have a source of space heating such as forced air supply registers, radiant tubing or a radiator. For systems using a combination of a central system and a gas vented fireplace or other individual conditioning units, the zone served by the individual conditioning unit can be limited to a single room. Bathrooms, laundry, halls and/or dressing rooms are not habitable rooms.
3. **Non-closeable Openings**. The total non-closeable opening area (W) between adjacent living and sleeping thermal zones (i.e., halls, stairwells, and other openings) must be less than or equal to 40 ft². All remaining zonal boundary areas must be separated by permanent floor-to-ceiling walls and/or fully solid, operable doors capable of restricting free air movement when in the closed position.

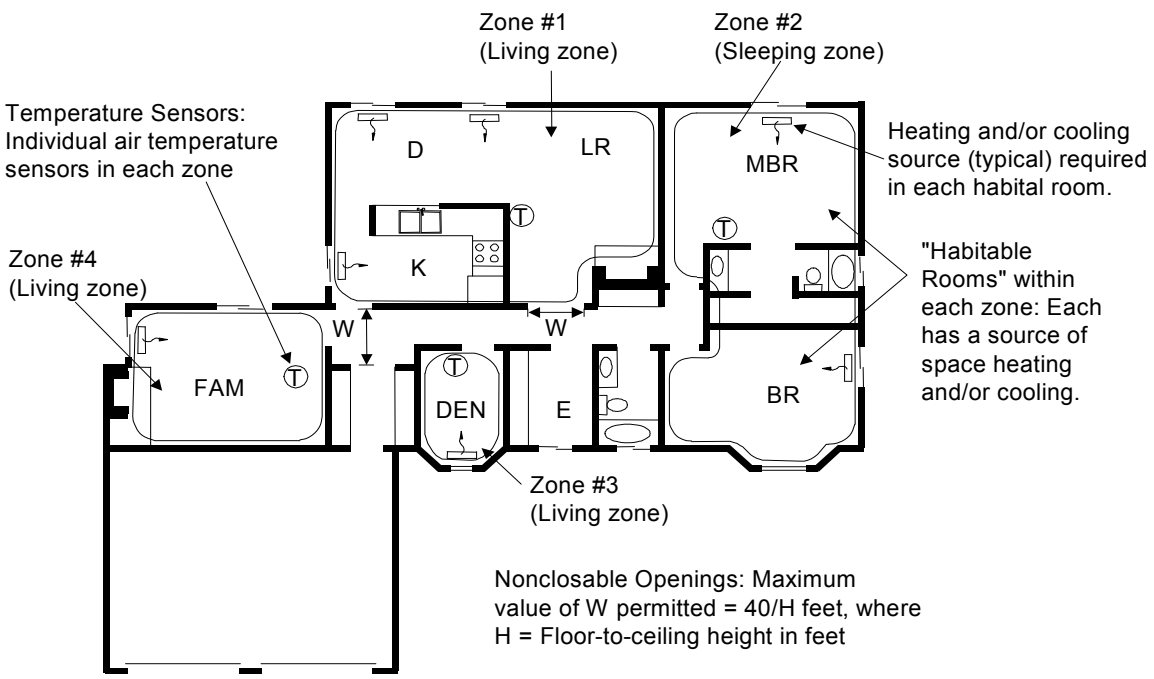

Figure 4-20 – Zonal Control Example

4. **Thermostats**. Each zone must be controlled by a central automatic dual setback thermostat that can control the conditioning equipment and maintain preset temperatures for varying time periods in each zone independent of the other. Thermostats controlling vented gas fireplace heaters that are not permanently mounted to a wall are acceptable as long as they have the dual setback capabilities.

Other requirements specific to forced air ducted systems include the following:

1. Each zone must be served by a return air register located entirely within the zone. Return air dampers are not required.
2. Supply air dampers must be manufactured and installed so that when

they are closed, there is no measurable airflow at the registers.

3. The system must be designed to operate within the equipment manufacturer's specifications.
4. Air is to positively flow into, through, and out of a zone only when the zone is being conditioned. No measurable amount of supply air is to be discharged into unconditioned or unoccupied space in order to maintain proper airflow in the system.

Although multiple thermally distinct living and/or sleeping zones may exist in a residence, the correct way to model zonal control for credit requires only two zones: one living zone and one sleeping zone. All separate living zone components must be modeled as one single living zone; the same must be done for sleeping zones.

Example 4-2

Question

In defining the living and sleeping zones for a home with a zonally-controlled HVAC system, can laundry rooms and bathrooms (which are not habitable spaces) be included on whichever zone they are most suited to geographically (e.g., a bathroom located near bedrooms)?

Answer

Yes. For computer modeling purposes, include the square footage of any non-habitable or indirectly conditioned spaces, with the closest zone.

Example 4-3

Question

I have two HVAC systems and want to take zonal control credit. Can the return air grilles for both zones be located next to each other in the 5 ft wide by 9 ft high hallway (in the same zone)?

Answer

No. Because of the need to prevent mixing of air between the conditioned zone and the unconditioned zone, it is necessary to (1) have the return air for each zone within that zone, and (2) limit any non-closeable openings between the two zones to 40 ft^2 or less. Unless these criteria and the other criteria listed in this chapter can be met, credit for a zonally controlled system cannot be taken.

Example 4-5

Question

How do I model the energy efficiency of a gas vented fireplace for zonal control heating?

Answer

The efficiency of gas vented fireplaces places is described as an Annual Fuel Utilization Efficiency (AFUE) and is calculated by the manufacturer per the ANSI Z21.88-2009 Standard. Gas vented fireplaces need to meet all of the other relevant requirements of zonal control.

Example 4-6

Question

Does a gas vented fireplace with a handheld remote thermostat meet the thermostat requirement for the two-zone modeling credit?

Answer

Yes, as long as the thermostat has manual on to start, automatic setback capability and temperature preset capability, it does not have to be permanently wall-mounted.

4.6 Indoor Air Quality and Mechanical Ventilation

§150.0(o) and §150.2(a)

As houses have been tightened up over the last twenty years due to energy cost concerns and the use of large sheet goods and housewrap, what used to be normal infiltration and exfiltration has been significantly reduced. In the meantime, we have introduced thousands of chemicals into our houses through building materials, cleaners, finishes, packaging, furniture, carpets, clothing and other products. The California Standards have always assumed adequate indoor air quality would be provided by a combination of infiltration and natural ventilation and that home occupants would open windows as necessary to make up any shortfall in infiltration. However, Commission sponsored research on houses built under the 2001 Standards has revealed lower than expected overall ventilation rates, higher than expected indoor concentration of chemicals such as formaldehyde and many occupants who do not open windows regularly for ventilation. The 2013 update includes mandatory mechanical ventilation intended to improve indoor air quality in homes with low infiltration and natural ventilation rates.

The Energy Commission adopted the requirements of ASHRAE Standard 62.2-2010, including ASHRAE Addenda b, c, e, g, h, i, j, l, and n [http://www.techstreet.com/ashrae/lists/ashrae_standards.tmpl], except that opening and closing windows (although permitted by ASHRAE) and continuous operation of central forced air system air handlers of a central fan integrated ventilation system are not an acceptable option for providing whole-building ventilation in California.

This section addresses the mandatory requirements for mechanical ventilation. All low-rise residential buildings are required to have a whole-building ventilation system and satisfy other requirements to achieve acceptable indoor air quality (IAQ).

The mechanical ventilation and indoor air quality requirements of ASHRAE Standard 62.2 as referenced from Section 150.0(o) are mandatory measures for newly constructed low-rise residential buildings. The applicable section is §150.0(o) for new construction. The applicable sections are §150.2(a)1C (prescriptive approach) and §150.2(a)2C (performance approach) for additions and alterations.

Ventilation for Indoor Air Quality §150.0(o), §150.2(a)1C, §150.2(a)2C

A. §150.0(o): ***Ventilation for Indoor Air Quality****.All dwelling units shall meet the requirements of ASHRAE Standard 62.2 – Ventilation and Acceptable Indoor Air Quality in Low-Rise Residential Buildings. Window operation is not a permissible method of providing the Whole-Building Ventilation airflow required in Section 4 of ASHRAE 62.2. Additionally, all dwelling units shall meet the following requirements:*

1. ***Field Verification and Diagnostic Testing*** *–*

A. ***Airflow Performance.*** *The Whole-Building Ventilation airflow required by Section 4 of the ASHRAE Standard 62.2 shall be*

confirmed through field verification and diagnostic testing in accordance with the applicable procedures specified in Reference Residential Appendix RA3.7.

.

§150.2(a)1C and§150.2(a)2C: *Additions larger than 1,000 square feet shall meet the ASHRAE Standard 62.2 Section 4 requirement to provide whole-building ventilation airflow. The whole building ventilation airflow rate shall be based on the conditioned floor area for the entire dwelling unit comprised of the existing dwelling conditioned floor area plus the addition conditioned floor area.*

The whole building ventilation airflow requirement in ASHRAE 62.2 is required in new buildings and in buildings with additions greater than 1,000 ft^2. All other mechanical ventilation requirements in §150.0(o), including local exhaust, must be met (as applicable) in all additions and alterations..

Alterations to components of existing buildings which previously met any requirements of ASHRAE 62.2 shall continue to meet its requirements upon completion of the alteration(s).

Refer to Chapter 9.X for more information on ventilation requirements for additions and alterations.

The following summarizes the key requirements for most newly constructed residences.

1. A whole-building mechanical ventilation system shall be provided. The typical solutions are described in the following section. This system shall be confirmed through field verification and diagnostic testing in accordance with the applicable procedures specified in Reference Residential Appendix RA3.7.
2. Kitchens and bathrooms shall have local exhaust systems vented to the outdoors.
3. Clothes dryers shall be vented to the outdoors.

Miscellaneous indoor air quality design requirements apply, including:

1. Ventilation air shall come from the out of doors and shall not be transferred from adjacent dwelling units, garages or crawlspaces.
2. Ventilation system controls shall be labeled and the home owner shall be provided with instructions on how to operate the system.
3. Combustion appliances shall be properly vented and air systems shall be designed to prevent back drafting.
4. The walls and openings between the house and the garage shall be sealed.
5. Habitable rooms shall have windows with a ventilation area of at least 4 percent of the floor area (see Ventilation Opening Area in Section 4.6.5 below)
6. Mechanical systems including heating and air conditioning systems that supply air to habitable spaces shall have MERV 6 filters or better.
7. Dedicated air inlets (not exhaust) that are part of the ventilation system

design shall be located away from known contaminants.

8. A carbon monoxide alarm shall be installed in each dwelling unit in accordance with NFPA 720, *Standard for the installation of Carbon Monoxide (CO) Detection and Warning Equipment*

9. Air moving equipment used to meet the whole-building ventilation requirement and the local ventilation exhaust requirement shall be rated in terms of airflow and sound.

   a. All continuously operating fans shall be rated at a maximum of 1.0 sone.

   b. Intermittently operated whole-building ventilation fans shall be rated at a maximum of 1.0 sone.

   c. Intermittently operated local exhaust fans shall be rated at a maximum of 3.0 sone.

   d. Remotely located air-moving equipment (mounted outside of habitable spaces) need not meet sound requirements if there is at least 4 feet of ductwork between the fan and the intake grill.

Compliance and Enforcement

Compliance with Indoor Air Quality and Mechanical Ventilation requirements is verified by the enforcement agency. HERS verification is required for the whole house ventilation requirement of ASHRAE 62.2.

In addition to HERS verification of the required whole house ventilation rate, if a central heating/cooling system air handler fan is utilized for providing ventilation air to the dwelling (central fan integrated ventilation), the air handler must meet the prescriptive fan Watt draw criteria which requires the installer to perform the diagnostic protocol given in Reference Appendix RA3.3, and a HERS rater must perform a verification of the air handler utilizing the same protocol (see CFI ventilation topic in the Supply Ventilation section below).

<u>Certificate of Compliance reporting requirements:</u>

1. When compliance with the Standards utilizes the performance approach, information that describes the whole-building ventilation system must be given as input to the compliance software, thus a performance Certificate of Compliance (CF1R) will report:

   c the ventilation airflow rate (calculated value) that must be delivered by the installed system to meet the whole-building ventilation requirement, and

   d the system type selected to meet the whole-building ventilation requirement, and

   e the fan power ratio (W/cfm) for the whole-building ventilation system that was selected, and

   f if applicable, the requirement for HERS verification of fan Watt draw of the central heating/cooling system air handler when CFI ventilation system is the whole-building ventilation system type selected.

The whole-building ventilation system that is installed in the dwelling must conform to the requirements given on the performance CF1R in order to comply. See section 4.6.3 Whole-Building Mechanical Ventilation Energy Consumption for more information about the performance calculations for whole-building ventilation systems. There are no requirements for providing information on the performance

CF1R to describe fans installed for other purposes such as local ventilation exhaust.

2. When compliance with the Standards utilizes the prescriptive approach, information that describes the whole-building ventilation system is not required on the CF1R. Thus, unless otherwise required by the enforcement agency, calculation of the required whole-building ventilation airflow rate and selection of the whole-building ventilation system type can be accomplished at the time of installation. There are no requirements for providing information describing fans installed for other purposes such as local exhaust on the prescriptive CF1R.

The enforcement agency may require additional information/documentation describing the ventilation systems be submitted along with the CF1R at plan check.

Installation Certificate reporting requirements:

The builder/installer must complete an Installation Certificate (CF2R-MECH-27) for the dwelling that identifies the installed mechanical ventilation and indoor air quality features for the dwelling.

The Installation Certificate requires that the installer provide:

1. Calculated value for whole-building ventilation airflow rate requirement for continuous and/or intermittent operation per ASHRAE 62.2 equations (see 4.6.2 and 4.6.4)
2. Determination of local ventilation exhaust airflow rate requirements for continuous and/or intermittent operation
3. Whole-building ventilation and local ventilation exhaust system/design type(s)
4. Installed fan equipment make, model, and rated performance used to meet the Standard
5. Installed duct system design information if compliance is being demonstrated by inspection of the prescriptive design criteria or manufacturer's design criteria
6. Measured airflow rate of the installed system if compliance is being demonstrated by the airflow measurement method
7. Confirmation that other requirements given in ASHRAE 62.2 have been met (see section 4.6.5)

The Installation Certificate must be signed by the builder/installing contractor who is responsible for the installed mechanical ventilation and indoor air quality related features, and the completed/signed Installation Certificate must be posted in the field for use by the building inspector at final inspection.

B. Reducing Pollutant Emissions from Interior Materials, Finishes, and Furnishings

The requirements of ASHRAE Standard 62.2 focus on whole-building mechanical ventilation and local ventilation exhaust at known sources of pollutants or moisture such as kitchens, baths, and laundries. While not a requirement of the Standards, builders and home owners should select materials, finishes and furnishings that have no or low emissions of air

pollutants, including formaldehyde and volatile organic compounds (VOCs).

Keeping air pollutants out of the building in the first place is more effective than flushing them out later through ventilation. Most building materials emit some level of VOCs, formaldehyde or other pollutants, and the resultant indoor pollutant exposures can pose a substantial risk for health effects such as cancer, asthma attacks, and irritation of the eyes, nose, and throat. Pollutant emissions are highest immediately after a new product is installed, but emissions may continue for days, weeks, months, or years. Build-up of air pollutants in the home is affected by ventilation, infiltration, and filtration rates which are the subjects of ASHRAE Standard 62.2.

Choosing materials, finishes and furnishings with low pollutant emissions requires some research on the part of the builder or the homeowner. Testing is required to determine the level of pollutant emissions. To this end, the California Department of Public Health (CDPH) has developed a standardized test procedure for interior materials such as paints, adhesives, sealants, sealers, carpets, resilient flooring, furniture, and ceiling panels. Construction assemblies or systems are tested, e.g., resilient floor tile is tested with the required adhesive. Typically, a small sample of the product or material is tested (usually a 6 inch square), but the test procedure may also be applied to larger items such as chairs, desks and other furnishings.

The Collaborative for High Performance Schools (CHPS) maintains a database of materials that have been tested by third-party groups to the CDPH protocol or an equivalent protocol. The list includes materials that are safe to use in classrooms. While not designed for the specific application of residences where ventilation rates are lower than those in schools, the list provides guidance on which products have low emissions. See the following link for more information:

http://www.betterbuildingsbetterstudents.org/dev/Drupal/node/445

In addition, simple measures can be taken during construction to reduce the emissions of pollutants in a building before it is occupied. Such measures include pre-conditioning building materials and furnishings before installation, providing continuous exhaust ventilation once the materials are installed, and controlling dust buildup on interior surfaces and ductwork. CHPS has developed required measures of this type for classrooms, but these measures would also be effective in new homes with mechanical ventilation systems. The California Air Resources Board (ARB) also provides guidance for reducing indoor air pollution in homes. For more information, see:

a ARB Indoor Air Quality Guidelines, http://www.arb.ca.gov/research/indoor/guidelines.htm.

b CHPS 2009 Criteria (Volume III)

Indoor Air Quality and Thermal Comfort section

http://www.chps.net/manual/.

4.6.1 Typical Solutions for Whole-Building Ventilation

There are three generic solutions to meeting the outside air ventilation requirement:

1. Exhaust ventilation,
2. Supply ventilation, or a
3. Combination of supply and exhaust ventilation. If the supply and exhaust flows are within 10 percent of each other this is called a balanced ventilation system.

Whole-building ventilation may be achieved through a single fan or a system of fans that are dedicated to this ventilation only. Or it may be carried out by fans that also provide local exhaust or distribute heating and cooling.

A. Exhaust Ventilation

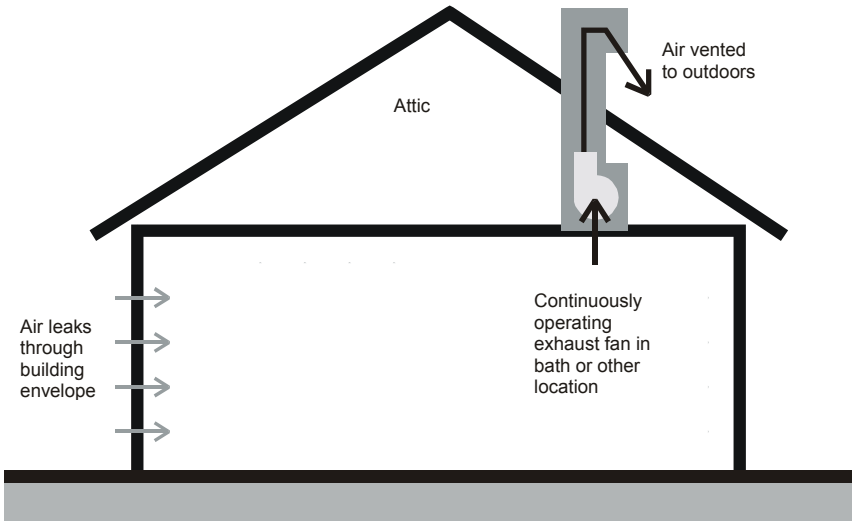

Figure 4-21 – Exhaust Ventilation Example

Exhaust Ventilation is probably the most common solution. This is usually achieved by a quiet ceiling-mounted bath fan or remote-mounted inline or exterior-mounted fan. Air is drawn from the house by the exhaust fan and outdoor air enters the house through leaks in the building envelope.

Many high quality bath fans are available in the 30 to 150 cfm size range, and are quiet enough to be used continuously. One or more fans of this size will meet the requirements of most homes. The exhaust fan can be a dedicated IAQ fan or it can be a more typical bath fan that is used for both whole-building ventilation and local ventilation.

Inline fans (either single pickup or multipoint pickup) can be a very effective method of providing quiet exhaust ventilation from one or several bathrooms. As discussed above, inline fans can be located in the garage, attic, basement, or mechanical room. Exterior-mounted fans can be mounted on the exterior wall or on the roof. A sound rating is not required for remote or exterior fans as long as there is at least 4 ft of duct between the closest pickup grille and the fan.

B. Supply Ventilation

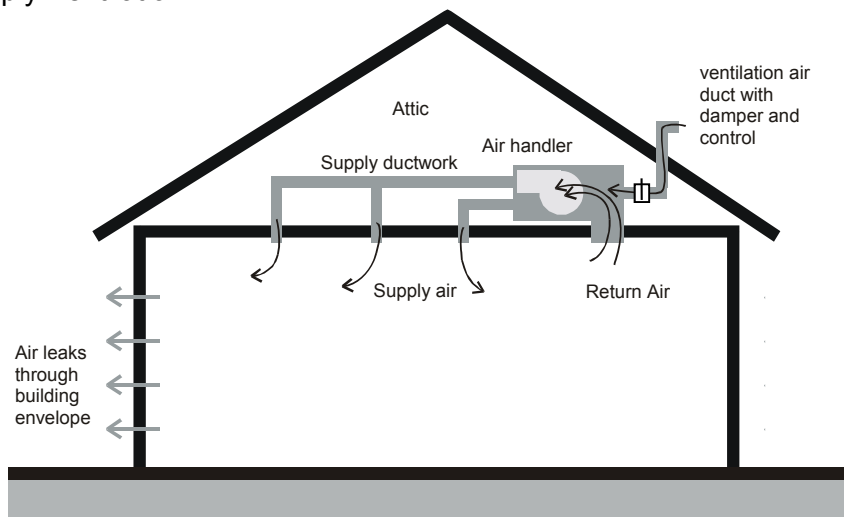

Figure 4-22 – Supply Ventilation Example

Supply ventilation works in just the opposite way as exhaust ventilation. Outside air enters the house through a dedicated supply fan or through the central HVAC system air handler and escapes through leaks in the building envelope.

With the supply ventilation approach, the outdoor air inlet should be placed to avoid known areas of contaminants, such as the garage, barbeque areas, and chimneys. If a dedicated fan is used, care must be taken to avoid introducing too much outdoor air into one location and creating uncomfortable conditions. The air handler or supply fans can be located on the exterior of the house or dwelling unit, or in the garage, attic, basement, or mechanical room.

The ventilation air can be distributed by a dedicated ventilation air duct system that is separate from the central forced air distribution duct system.

Alternatively, the central forced air heating/cooling system air handler can be configured to function as a supply ventilation system by installing a dedicated ventilation air duct that connects to the air handler's return plenum at one end, and connects on the other end to the outside of the dwelling to access fresh air from outdoors. This strategy, called Central Fan Integrated (CFI) ventilation, uses the negative pressure in the return plenum to pull the desired amount of outdoor air in through the ventilation air duct and into the return plenum. Then the central system air handler distributes the ventilation air to all rooms in the dwelling. Also, a damper and controls must be installed that ensure the air handler delivers the required ventilation airflow regardless of the size of the heating or cooling load. One type of CFI product operates in ventilation mode by providing 100% outdoor air. This product primarily provides off-peak cooling through mechanical ventilation under favorable outdoor conditions, but can also satisfy fresh air ventilation requirements as long as it is properly controlled to ensure compliance with the minimum intermittent ventilation rate. Refer to section 4.6.2 for more details.

When discussing design and compliance considerations for CFI ventilation systems, it is important to draw the distinction between the central forced air system fan total airflow, and the much smaller airflow that is induced to flow

into the return plenum from outdoors (ventilation airflow). Refer to Figure 4-22 and note that the total airflow through the air handler is the sum of the return airflow and the outside air ducted to the return plenum (ventilation airflow).

CFI ventilation systems can use a very significant amount of electricity on an annual basis. Refer to the discussion on energy consumption of central fan integrated ventilation systems in section 4.6.3. Air handlers used in CFI ventilation systems are required to meet the prescriptive fan Watt draw requirements in all climate zones.

ASHRAE Standard 62.2 also requires the installer to measure the ventilation airflow rate induced into the return plenum in a CFI system to ensure that it will meet the whole-building ventilation rate requirements regardless of the heating or cooling load when the dwelling is occupied. Because section 150.0(o) specifically prohibits continuously operated, CFI systems are considered "intermittent" ventilation systems (see section 4.6.2). The results of the airflow measurement of the installed CFI system, and a description of the intermittent ventilation control schedule used for the CFI system must be given on the Installation Certificate for the system. The whole house ventilation rate will also be verified by a HERS rater.

Note: the outside air (OA) ducts for CFI ventilation systems shall not be sealed/taped off during duct leakage testing. However, CFI OA ducts that utilize controlled motorized dampers, that open only when OA ventilation is required to meet ASHRAE Standard 62.2, and close when OA ventilation is not required, may be configured to the closed position during duct leakage testing.

C. Combination Ventilation

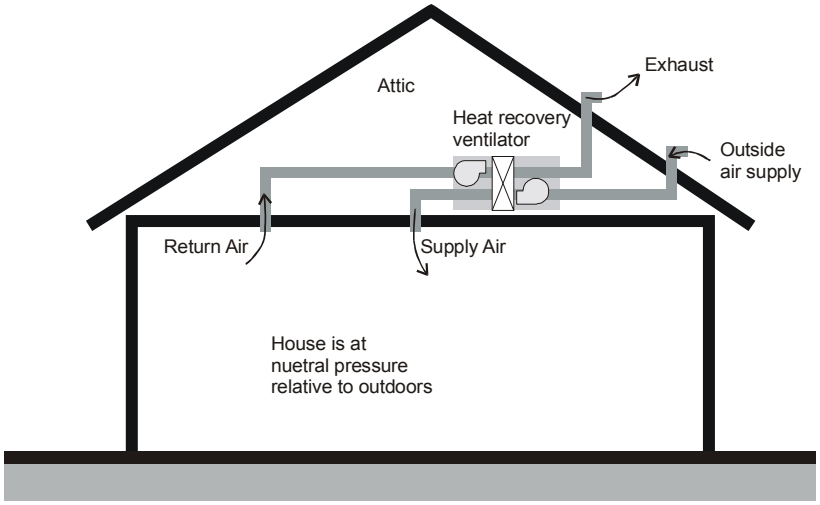

Figure 4-23 – Combination Ventilation Example

Combination systems use both exhaust fans and supply fans. If both fans supply the same airflow the system is balanced and the house has a neutral pressure.

Combination systems are often integrated devices, sometimes with a heat exchanger or heat recovery wheel. The supply and exhaust airstreams are typically of equal flow.

Combination systems can also consist of a mixture of supply fans and exhaust fans. It may be as simple as a quiet continuous bathroom exhaust fan matched to an outdoor air connection that introduces air into the return air plenum of a continuously-operating central heating/cooling system air handler. Note: ventilation systems that utilize constant operation of the central heating/cooling system air handler can use a very significant amount of electricity on an annual basis and are not permitted by the standards. Refer to the discussion on energy consumption of central fan integrated ventilation systems in section 4.6.3.

4.6.2 Whole-building Ventilation Flow Rate (Section 4 of ASHRAE 62.2)

The whole-building ventilation system may operate continuously or intermittently. The whole-building ventilation rate is determined for continuous ventilation, and if the system is operated intermittently, an adjustment is made.

A. Continuous Whole-building Ventilation

There are two strategies for determining the continuous whole-building ventilation rate. One, called the Fan Ventilation Rate Method, assumes that all of the required ventilation will be provided mechanically. The other, called Total Ventilation Rate Method, assumes that ventilation will be achieved by some combination of measured natural infiltration and a mechanical means.

Both methods are allowed for newly constructed homes and altered homes. From a design perspective, the Fan Ventilation Rate Method may be advantageous due to not having to predict the homes infiltration rate prior to the home being built, as is required by the Total Ventilation Rate Method.

In either case, a fan system must be designed and installed that meets the whole-building ventilation airflow requirements, however it is determined. Both methods allow for an intermittent ventilation option.

Fan Ventilation Rate Method

The continuous whole-building ventilation rate is 1 cfm for each 100 ft² of conditioned floor area (CFA) plus 7.5 cfm for each occupant. The number of occupants is calculated as the number of bedrooms plus one. For example, a three bedroom house is assumed to have four occupants. The required ventilation rate is given by the following equation.

Equation 4-1

$$Ventilation\ \ Rate\ (cfm) = \frac{CFA}{100} + 7.5 \times (Number\ \ Bedrooms\ + 1)$$

Instead of using one of the equations given above, Table 4-14 may be used to determine the required ventilation. This table allows the user to find the required ventilation rate directly if they know the floor area and number of bedrooms. Note that Table 4-14 may give somewhat higher targets than Equation 4-1.

To comply with ASHRAE 62.2 the delivered airflow of the whole house ventilation fan must be greater than or equal to the required ventilation rate

(cfm) from either Table 4 14 or Equation 4 1.

Table 4-14 – Continuous Whole-building Ventilation Rate (cfm) (from ASHRAE 62.2,Table 4.1a (I-P))

	Bedrooms				
Conditioned Floor Area (ft²)	0-1	2-3	4-5	6-7	>7
≤1500	30	45	60	75	90
1501-3000	45	60	75	90	105
3001-4500	60	75	90	105	120
4501-6000	75	90	105	120	135
6001-7500	90	105	120	135	150
>7500	105	120	135	150	165

Example 4-7 – Required Ventilation

Question

What is the required continuous ventilation rate for a 3 bedroom, 1,800 ft² townhouse?

Answer

48 cfm. This is calculated as 1800/100 + (3+1)x7.5 = 48 cfm. Using Table 4–15, the required ventilation rate would be 60 cfm.

Example 4-8

Question

The house I am building has a floor area of 2,240 ft² and 3 bedrooms. My calculations come out to 52.4 cfm. Can I use a 50 cfm fan?

Answer

No, a 50 cfm fan does not meet the standard. You would need to select the next larger size fan, such as a unit rated at 55 cfm or 60 cfm. Note that a fan's nominal rating can be very different than what a fan actually delivers when installed. Actual airflow depends greatly on the length and size of the duct needed to get the air to the outside. Proper fan sizing requires more detailed manufacturer's data, such as airflow vs. static pressure. This is why whole-house ventilation rates must be verified by a HERS rater.

Total Ventilation Rate Method

This method for determining a continuous whole-building ventilation rate starts with a calculation of the Total Ventilation Rate that consists of both the natural and mechanical ventilation rates. This number is calculated using a similar equation to the one used in the Fan Ventilation Rate Method, but results in a substantially higher value. Next, the ventilation associated with infiltration is calculated from diagnostically tested values. That value is subtracted from the Total Ventilation Rate, leaving the ventilation rate that must be provided mechanically. This continuous fan ventilation rate can then be used to determine an intermittent value using the same table. (Note that the following equations and factors were taken from ASHRAE 62.2 – 2010, including Addenda b, c, e, g, h, i, j, l, and n)

The equation for calculating the Total Ventilation Rate is

Equation 4-2 $Q_{total} = 0.03A_{floor} + 7.5(N_{br} + 1)$

Where

Q_{total} = total required ventilation rate (cfm)

A_{floor} = floor are of residence (ft^2)

N_{br} = number of bedrooms (not less than one)

Note that the number multiplied times the floor area is three times greater than that used in equation 4-1.

The ventilation rate associate with infiltration is calculated using an ELA value that must be diagnostically verified in the field.

Note that the ELA value used for these equations is in square feet, not square inches as may be the case in other equations.

RA3.8 covers the protocols for blower door testing for the purpose of verifying infiltration for reduced infiltration compliance credit. Unless specifically directed otherwise in this section, RA3.8 will be adhered to.

Because infiltration can occur by air coming into the home as well as air going out of the home, it is more accurate to measure ELA under depressurization and pressurization, then average the two values using equation 4.3.

Equation 4.3

$ELA = (L_{press} + L_{depress})/2$

Where

ELA = effective leakage area in square feet

L_{press} = leakage area from pressurization in square feet

$L_{depress}$ = leakage area from depressurization in square feet

Note that when designing this system for a house that is not built yet, the ELA values will be estimated numbers. If the actual (measured) number is different, the ventilation system design may need to be modified to comply with the standard.

The leakage is normalized based on the area of the house and the potential for stack effect using equation 4.4.

Equation 4.4:

$$NL = 1000 \cdot \frac{ELA}{A_{floor}} \cdot \left[\frac{H}{H_r}\right]^z$$

Where

NL = normalized leakage

Hr = reference height, 8.2 ft (2.5m)

H = vertical distance from lowest above grade floor to highest ceiling, ft (m)

Z = 0.4 for the purpose of calculating Effective Annual infiltration Rate below

The effective annual infiltration rate is then calculation using Equation 4.5. This is the amount of infiltration that is considered to offset the need for fan powered ventilation.

Equation 4.5:

$$Q_{inf}(\text{cfm}) = \frac{\text{NL} \cdot \text{wsf} \cdot A_{floor}}{7.3}$$

Where

NL = normalized leakage

Wsf = weather and shielding factor from Normative Appendix X, Table X1

A_{floor} = floor area of residence, ft^2

The ventilation rate required by the fan is then calculated by subtracting the infiltration ventilation rate from the total ventilation rate.

Equation 4-6: $Q_{fan} = Q_{total} - Q_{inf}$

Where

Q_{fan} = required mechanical ventilation rate (cfm)

Q_{total} = total required ventilation rate (cfm)

Q_{inf} = effective annual average infiltration rate (cfm)

Note that for well sealed houses, the fan ventilation rate calculated using the Total Ventilation Rate Method may be higher than that calculated by the Fan Ventilation Rate method, so it is worth checking both.

B. Ventilation Rate for Combination Systems

When a combination ventilation system is used, meaning that both supply and exhaust fans are installed, the provided ventilation rate is the larger of the total supply airflow or the total exhaust airflow. The airflow rates of the supply and exhaust fans cannot be added together to determine the provided ventilation rate.

Example 4-9

Question

A 2,400 ft² house has exhaust fans running continuously in two bathrooms providing a total exhaust flow rate of 40 cfm, but the requirement is 60 cfm. What are the options for providing the required 60 cfm?

Answer

The required 60 cfm could be provided either by increasing the exhaust flow by 20 cfm or by adding a ventilation system that blows 60 cfm of outdoor air into the building. It cannot be achieved by using a make-up air fan blowing 20 cfm into the house.

C. Intermittent Whole-building Ventilation

In some cases, it may be desirable to design a whole-building ventilation system that operates intermittently. One common example of intermittent ventilation is when outside air is ducted to the return plenum of the central heating/cooling system, and thus the central heating/cooling system fan is used to distribute the ventilation air to the rooms in the building (see CFI system described above in the supply ventilation section).

Intermittent ventilation is permitted as long as the ventilation airflow is increased to respond to the fewer hours of fan operation and the tendency of pollutant concentrations to build up during off cycles.

Equation 4-7

$Q_f = Q_r/(e \times f)$

Where

Q_f= fan flow rate
Q_r = ventilation air requirement (continuous)
e = ventilation effectiveness (from Table 4-15**Error! Reference source not found.** below)
f = fractional on-time, defined as the on-time for one cycle divided by the cycle time.

Table 4-15 also requires the calculation of the required turnover, N, as follows:

Equation 4-8

$N = 12.8 \cdot Q_{fan} \cdot aT_{cyc}/A_{floor}$ (I-P)

where

Q_{fan} = mechanical ventilation air requirement from Table 4-15, cfm

T_{cyc} = fan cycle time, defined as the total time for one off-cycle and one on-cycle, h

A_{floor} = floor area, ft^2

The values of for turnover (N) and fractional on time (*f*) are used in Table 4-15, which will yield the fan effectiveness value (*e*), which is then used in equation 4-8 to calculate the fan flow rate.

Table 4–15 – Mechanical Ventilation Effectiveness for Intermittent Fans

Mechanical Ventilation Effectiveness for Intermittent Fans

Fractional On-Time, *f*	Turnover, *N*														
	0.0	1.0	1.5	2.0	2.5	3.0	3.5	4.0	5.0	6.0	8.0	12	20	40	100+
0.00	1.00	0.95	0.88	0.78	0.60	0.00									
0.05	1.00	0.96	0.90	0.81	0.67	0.41	0.00								
0.10	1.00	0.96	0.91	0.83	0.72	0.55	0.21	0.00							
0.15	1.00	0.96	0.92	0.85	0.76	0.63	0.44	0.18	0.00						
0.20	1.00	0.97	0.93	0.87	0.79	0.69	0.56	0.40	0.03	0.00					
0.25	1.00	0.97	0.94	0.89	0.82	0.74	0.64	0.53	0.26	0.02	0.00				
0.30	1.00	0.98	0.95	0.90	0.85	0.78	0.71	0.62	0.42	0.24	0.00				
0.35	1.00	0.98	0.95	0.92	0.87	0.82	0.76	0.69	0.54	0.39	0.14	0.00			
0.40	1.00	0.98	0.96	0.93	0.89	0.85	0.80	0.75	0.63	0.52	0.32	0.02	0.00		
0.45	1.00	0.99	0.97	0.94	0.91	0.88	0.84	0.79	0.70	0.61	0.45	0.21	0.00		
0.50	1.00	0.99	0.97	0.95	0.93	0.90	0.87	0.83	0.76	0.69	0.57	0.37	0.13	0.00	0.00
0.60	1.00	0.99	0.98	0.97	0.96	0.94	0.92	0.90	0.86	0.81	0.74	0.61	0.45	0.27	0.14
0.70	1.00	1.00	0.99	0.98	0.98	0.97	0.96	0.94	0.92	0.90	0.85	0.78	0.68	0.55	0.46
0.80	1.00	1.00	1.00	0.99	0.99	0.99	0.98	0.98	0.97	0.96	0.94	0.90	0.85	0.77	0.70
0.90	1.00	1.00	1.00	1.00	1.00	1.00	1.00	0.99	0.99	0.99	0.98	0.97	0.96	0.93	0.88
1.00	1.00	1.00	1.00	1.00	1.00	1.00	1.00	1.00	1.00	1.00	1.00	1.00	1.00	1.00	1.00

Intermittent ventilation systems have to be automatically controlled by a timer or other device that assures that they will operate the minimum amount of time needed to meet the ventilation requirement. The scheduling of the automatic controls shall make sure that the fan operates at least 10% of the time and that a single on/off cycle occurs at least once per day.

Example 4-10 – Flowrate for Intermittent Fan

Question

The required ventilation rate is 60 cfm. If the ventilation fan runs 80 percent of the time, what must the airflow rate be?

Answer

Since f is 0.8 (80 percent), then the ventilation effectiveness, e, is 1. Q_f equals 60/(0.8 x 1) = 75 cfm. This is a fairly small increase in fan size.

Example 4-11

Question

For the same house, if the fan runs half the day (12 hours per day), what is the required airflow?

Answer

The fractional on-time is 0.5 (50 percent), so e is also 0.5 from Table 4-15**Error! Reference source not found.**. The fan size, Q_f= 60/(0.5 x 0.5) = 240 cfm. This is a much larger increase in fan size.

Example 4-12

Question

For an apartment, the flow required is 45 cfm. If the ventilation fan runs 20 minutes on and 10 minutes off, what is the required fan size?

Answer

Fractional on-time is 0.67 (67 percent). [f = on-time/total time = 20/(20 + 10)] Since the fan runs at least once every three hours, e is 1.0. The fan size, Q_f = 45/(0.67 x 1.0) = 67.5 cfm, which rounds to 68 cfm.

Example 4-13

Question

For the same apartment, if the fan runs 8 hours on and 4 hours off, what flow rate is required?

Answer

Fractional on-time is again 0.67 (67 percent, but now e is 0.75. Q_f= 45/(0.67 x 0.75) = 89.6 cfm, rounded to 90 cfm.

Example 4-14

Question

I have an electronic timer system. I would like to have the system run only 2 hours in the morning and 8 hours in the evening (6 a.m. – 8 a.m. and 4 p.m. to midnight). I can set the timer to operate the fan for 1 minute every hour. What flow rate do I need?

Answer

Forget about the 1 minute every hour. ASHRAE has issued an interpretation of the standard that says that operation such as you describe is not sufficient to use a ventilation effectiveness of 1. In this case, the fractional on-time is 0.42 (10 hours/24 hours), so ventilation effectiveness from Table 4-15**Error! Reference source not found.** is 0.5. Q_f= 60 cfm/(0.42 x 0.5) = 286 cfm.

D. Control and Operation

From ASHRAE 62.2-2010

Section 4.4 Control and Operation

The "fan on" switch on a heating or air-conditioning system shall be permitted as an operational control for systems introducing ventilation air through a duct to the return side of an HVAC system. Readily accessible override control must be provided to the occupant. Local exhaust fan switches and "fan on" switches shall be permitted as override controls. Controls, including the "fan-on" switch of a conditioning system, must be appropriately labeled.

Exception to Section 4.3: An intermittently operating, whole-house mechanical ventilation system may be used if the ventilation rate is adjusted according to the exception to 4.5. The system must be designed so that it can operate automatically based on a timer. The intermittent mechanical ventilation system must operate at least one hour per day and must operate at least 10% of the time.

ASHRAE 62.2 requires that the ventilation system have an override control which is readily accessible to the occupants. The "fan-on" switch on a typical thermostat controlling the HVAC system and the wall switch for an exhaust fan are both allowed as acceptable controls. The control must be "readily accessible", e.g. it must be capable of being accessed quickly and easily without having to remove panels or doors. It can be as simple as a labeled wall switch by the electrical panel. It may be integrated in a labeled wall-mounted control or in the air moving device that requires the removal of the cover plate, but it cannot be buried in the insulation in the attic or the inside of the fan. The occupant must be able to modify the settings or override the system.

If intermittent fans are used, they must be controlled by a timer, and they must have an increased airflow rate to compensate for the off time.

Time-of-day timers or duty cycle timers can be used to provide intermittent whole-building ventilation. Manual crank timers cannot be used, since the system must operate automatically without intervention by the occupant. Some controls "look back" over a set time interval to see if the air handler has already operated for heating or cooling before it turns on the air handler for ventilation only operation.

Example 4-15 – Control Options

Question

I plan to use a bathroom exhaust fan to provide whole-building ventilation for a house. The fan is designed to be operated by a typical wall switch. Do I need to put a label on the wall plate to comply with the requirement that controls be "appropriately labeled"?

Answer

Yes. If the exhaust fan were serving only the local exhaust requirement for the bathroom, then a label would not be required. Since the fan is providing the required whole-building ventilation, a label is needed to inform the occupant that the fan should be operating whenever the home is occupied.

Example 4-16 – Thermostatic Control

Question

I plan to provide ventilation air by connecting a duct run from the return side of the central air handler to the outdoors. Ventilation will be provided whenever the air handler operates. According to my estimates, the system will run on calls for heating and cooling about 40 percent of the time, averaged over the year. If I provide a safety factor and assume that it only runs 25 percent of the time, and size the airflow accordingly, can I allow the system to run under thermostatic control?

Answer

No. A system under thermostatic control will go through periods with little or no operation when the outdoor temperature is near the indoor setpoint, or if the system is in setback mode. An intermittently operating ventilation system MUST be controlled by a timer in order to assure that adequate ventilation is provided regardless of outdoor conditions.

As mentioned in the text, there are timer based controls available that function to keep track of when (and for how long) the system operates to satisfy heating/cooling requirements in the home. These controls only turn on the central fan to provide additional ventilation air when heating/cooling operation of the central fan has not already operated enough to provide the required ventilation.

4.6.3 Whole-Building Mechanical Ventilation Energy Consumption

For builders using the performance compliance approach the energy use of fans (other than CFI fans) installed to meet the whole-building ventilation requirement is usually not an issue because the standard design W/CFM is set equal to the proposed design W/CFM up to an energy use level sufficient to accommodate most well designed ventilation systems. Also, the standard design whole-building ventilation system airflow rate is set equal to the proposed design whole-building ventilation system airflow rate so there is no energy penalty or credit for most systems. Systems that utilize Heat Recovery or Energy Recovery ventilators (HR/ERV) may need to account for the heat recovery benefit in the performance calculation to make up for their high energy use.

The energy use of the central air handler fan utilized for a CFI ventilation system must conform to the same fan Watt draw (W/CFM) limit as is the prescriptive requirement for cooling systems in all climate zones. CFI systems are the only type of ventilation system that must meet a prescriptive fan Watt draw requirement that must be tested by the builder/installer, and verified by a HERS rater in accordance with the diagnostic test protocols given in RA3.3.

Energy use of fans installed for other purposes such as local exhaust is not regulated in the Standards.

A. Central Fan Integrated Ventilation Systems - Watt Draw

§150.1(f)10. Central Fan Integrated Ventilation Systems. Central forced air system fans used in central fan integrated ventilation systems shall demonstrate, in Air Distribution Mode, an air-handling unit fan efficiency less than or equal to 0.58 W/CFM as confirmed through field verification and diagnostic testing in accordance with all applicable procedures specified in Reference Appendix RA 3.3.

CFI system automatic controls must operate the central system air handler fan (generally part of every hour of the year) in order to draw in and/or distribute ventilation air around the home even when there is no heating or cooling required. CFI systems generally do not operate continuously, thus do not meet

the whole-building ventilation requirement as a “continuous" system. Because the CFI ventilation control increases the central system air handler fan run time significantly, and because typical central system air handler fan and duct systems require a large amount of power, a CFI ventilation system can use a very significant amount of electricity on an annual basis.

The 2008 update includes prescriptive standards for central system air handler fan Watt draw for cooling systems in the hottest California climates. The same prescriptive fan Watt draw requirement also applies to any central system air handler used for a CFI system installed in any California climate zone. Compliance with this requirement involves a post-construction measurement by the installing contractor of the airflow through the air handler, and the simultaneous measurement of the Watt draw of the air handler fan motor. This fan Watt draw measurement must be verified by a HERS rater (see Reference Residential Appendix RA3.3). The central system air handler must be operating in ventilation mode (outdoor air damper is open and ventilation air is flowing into the return plenum from outside the building) and the airflow that must be measured is the total airflow through the air handler (system airflow), which is the sum of the return airflow, and the outside air ducted to the return plenum (ventilation airflow). To pass the test, the watt draw must be less than 0.58 W/CFM.

Builders who utilize CFI systems and comply using the performance approach have the option of accepting the default value for the central system fan Watt draw of 0.8 W/CFM (which does not require a post-construction measurement and HERS verification). Alternatively, the builder can specify a lower W/CFM value for compliance which must be tested and verified by a HERS rater. In either case the compliance software will check the furnace fan heating and cooling operation every hour, and if the air handler has not been operating for at least 20 minutes during that hour, the software will calculate energy use for operation in CFI mode until 20 minutes of fan operating occurs. The standard design ventilation energy consumption for that hour will be calculated as the extra fan run time at a Watt draw of 0.58 W/CFM. The proposed design ventilation energy for that hour will be calculated as the extra fan run time at the Watt draw that was specified for compliance, otherwise at the default Watt draw of 0.8 W/CFM.

B. Other Whole-Building Ventilation Systems – Watt Draw

There are no prescriptive requirements for maximum fan energy (Watt draw) for whole-building ventilation systems other than CFI systems.

Builders who specify other whole-building ventilation systems and comply using the performance approach have the option of accepting the default minimum whole-building ventilation airflow rate and a Watt draw value of 0.25 W/CFM which is typical of simple exhaust fans that meet the 1 Sone requirement. If the builder installs a whole-building ventilation system that has a fan Watt draw specification greater than 1.2 W/CFM of ventilation airflow, then he must input the ventilation airflow (CFM) and Watt draw (W/CFM) corresponding to the system that he proposes to install. The compliance software will simulate whole-building ventilation using the builder’s specified ventilation CFM and W/CFM for the proposed design. For the standard design the builders proposed CFM and 1.2 W/CFM will be used. If the builder specifies a system with heat recovery he inputs the recovery efficiency of his

proposed system and the compliance software uses it in the proposed design to calculate the heating and cooling impact of the whole-building ventilation. Ventilation heat recovery is never used in the standard design.

4.6.4 Local Exhaust (Section 5 of ASHRAE 62.2)

Local exhaust (sometimes called spot ventilation) has long been required for bathrooms and kitchens to deal with moisture and odors at the source. Building codes have required an operable window or an exhaust fan in baths for many years and have generally required kitchen exhaust either directly through a fan or indirectly through a ventless range hood and an operable window. The 2008 Standards recognize the limitations of these indirect methods of providing ventilation to reduce moisture and odors and requires that these spaces be mechanically exhausted directly to outdoors even if windows are present. As we build tighter homes with more insulation, the relative humidity in the home has increased and the potential for condensation on cool or cold surfaces has increased as well. The presence of moisture condensation has been a leading cause of mold and mildew in both new and existing construction. The occurrence of asthma has also increased as the interior relative humidity has gotten higher. Therefore, it has become more important to remove the moisture from bathing and cooking right at the source.

The Standards require that each kitchen and bathroom have a local exhaust system installed. Generally this will be accomplished by installing a dedicated exhaust fan in each room that requires local exhaust, although ventilation systems that exhaust air from multiple rooms utilizing a duct system connected to a single ventilation fan are allowed as long as the minimum local ventilation airflow rate requirement is met in all rooms served by the system. The Standards define kitchens as any room containing cooking appliances, and bathrooms are rooms containing a bathtub, shower, spa, or other similar source of moisture. Note that a room containing only a toilet is not required by the Standards to have mechanical exhaust; it assumes that there will be an adjacent bathroom which will have local exhaust.

The Standards allow the designer to choose between intermittent operation or continuous operation for the local exhaust ventilation system. The ventilation rates are different because the ventilation effectiveness of an intermittent operation fan is different than the ventilation effectiveness of a continuous operation fan.

Building codes may require that fans used for kitchen range hood ventilation be safety-rated by UL or some other testing agency for the particular location and/or application. Typically, these requirements address the fire safety issues of fans placed within an area defined by a set of lines at 45° outward and upward from the cook top. Few “bath” fans will have this rating and cannot be used in this area of the kitchen ceiling.

Example 4-17 – Local Exhaust Required for Toilet

Question

I am building a house with 2½ baths. The half bath consists of a room with a toilet and sink. Is local exhaust required for the half bath?

Answer

No. Local exhaust is required only for bathrooms, which are defined by the Standards as rooms with a bathtub, shower, spa or some other similar source of moisture. This does not include a simple sink for occasional hand washing.

Example 4-18

Question

The master bath suite in a house has a bathroom with a shower, spa and sinks. The toilet is in a separate, adjacent room with a full door. Where do I need to install local exhaust fans?

Answer

The Standards only requires local exhaust in the bathroom, not the separate toilet room.

A. Intermittent Local Exhaust

The Standards requires that intermittent local exhaust fans be designed to be operated by the occupant. This usually means that a wall switch or some other type of control is accessible and obvious. There is no requirement to specify where the control or switch needs to be located, but bath fan controls are generally located next to the light switch, and range hood or downdraft fan controls are generally integrated into the range hood or mounted on the wall or counter adjacent to the range hood.

Bathrooms can use a variety of exhaust strategies. They can utilize typical ceiling bath fans or may utilize one or two pickups for remote inline or exterior-mounted fans or heat recovery products. Intermittent local exhaust can be integrated with the whole-building ventilation system to provide both functions. Kitchens can have range hoods, down-draft exhausts, ceiling fans, wall fans, or pickups for remote inline or exterior-mounted fans. Generally, HVR/ERV manufacturers will not allow kitchen pickups to avoid the issue of grease buildup in the heat exchange core. Building codes typically require that the kitchen exhaust must be exhausted through metal ductwork for fire safety.

Example 4-19 – Ducting Kitchen Exhaust to the Outdoors

Question

How do I know what kind of duct I need to use. I’ve been using recirculating hoods my entire career, now I need to vent to outdoors. How do I do it?

Answer

Kitchen range hood or downdraft duct is generally smooth metal duct that is sized to match the outlet of the ventilation device. It is often six inch or seven inch round duct or the range hood may have a rectangular discharge. If it is rectangular, the fan will typically have a rectangular-to-round adapter included. Always use a terminal device on the roof or wall that is sized to be at least as large as the duct. Try to minimize the number of elbows used.

Example 4-20

Question

How do I know what the requirements are in my area?

Answer

Ask your enforcement agency for that information. Some enforcement agencies will accept metal flex, some will not.

B. Control and Operation for Intermittent Local Exhaust

The choice of control is left to the designer. It can be an automatic control like an occupancy sensor or a manual switch. Some products have multiple speeds and some switches have a delay-off function that continues the exhaust fan flow for a set time after the occupant leaves the bathroom. New control strategies continue to come to the market. The only requirement is that there is a control.

C. Ventilation Rate for Intermittent Local Exhaust

A minimum intermittent ventilation airflow of 100 cfm is required for the kitchen range hood and a minimum intermittent ventilation airflow of 50 cfm is required for the bath fan.

The 100 cfm requirement for the range hood or microwave/hood combination is the minimum to adequately capture the moisture and other products of cooking and/or combustion. The kitchen exhaust requirement can also be met with either a ceiling or wall-mounted exhaust fan or with a ducted fan or ducted ventilation system that provides at least 5 air changes of the kitchen volume per hour. Recirculating range hoods that do not exhaust pollutants to the outside cannot be used to meet the requirements of the ASHRAE Standard 62.2.

Most range hoods provide more than one speed, with the high speed at 150 cfm or more – sometimes much more. Range hoods are available that are rated for 1,000 or 1,500 cfm on high speed and are often specified when large commercial-style stoves are installed. Care must be taken to avoid backdrafting combustion appliances when large range hoods are used. Refer to Table 5.1 in ASHRAE 62.2 for intermittent local ventilation exhaust airflow rates.

Example 4-21 – Is an Intermittent Range Hood Required?

Question

I am building a house with a kitchen that is 12 ft x 14 ft with a 10 ft ceiling. What size ceiling exhaust fan is required?

Answer

The kitchen volume is 12 ft x 14 ft x 10 ft = 1680 ft^3. 5 air changes is a flowrate of 1680 ft^3 x 5/ hr ÷ 60 min/hr = 140 cfm. So this kitchen must have a ceiling or wall exhaust fan of 140 cfm or a 100 cfm vented range hood.

D. Continuous Local Exhaust

The Standards allow the designer to install a local exhaust system that operates without occupant intervention continuously and automatically during all occupiable hours. Continuous local exhaust is generally specified when the

local exhaust ventilation system is combined with a continuous whole-building ventilation system. For example, if the whole-building exhaust is provided by a continuously operating exhaust fan located in the bathroom, this fan satisfies the local exhaust requirement for the bathroom. The continuous local exhaust may also be part of the continuous whole-building ventilation system, such as a pickup for a remote fan or HRV/ERV system.

Continuously operating bathroom fans must operate at a minimum of 20 cfm and continuously operating kitchen fans must operate at 5 air changes per hour. Note: these continuous ventilation airflow rates are different than the ventilation airflow rates required for intermittent local exhaust. Refer to Table 5.2 in ASHRAE 62.2 for continuous local ventilation exhaust airflow rates.

The requirement that continuous kitchen exhaust fans must provide 5 air changes per hour is due to the difficulty of a central exhaust to adequately remove contaminants released during cooking from kitchens that may be quite large, have an open-plan design, or have high ceilings. The only way to avoid a vented kitchen hood is to provide more than 5 air changes per hour of constant local exhaust ventilation.

Example 4-22 – Continuous Kitchen Exhaust

Question

The kitchen in an apartment is 5 ft. by 10 ft., with an 8 ft ceiling. If a continuous ceiling-mounted exhaust fan is used, what must the airflow be?

Answer

The kitchen volume is 5 ft x 10 ft x 8 ft = 400 ft^3. 5 air changes equates to 400 ft^3 x 5/hr ÷ 60 min/hr = 34 cfm.

Example 4-23

Question

A new house has an open-design 12 ftx18 ft ranch kitchen with 12 ft cathedral ceilings. What airflow rate will be required for a continuous exhaust fan?

Answer:

The kitchen volume is 12 ft x 18 ft x 12 ft = 2592 ft^3. The airflow required is 2592 ft^3 x 5/hr ÷ 60 min/hr = 216 cfm.

4.6.5 Other Requirements (Section 6 of ASHRAE 62.2)

A. Transfer Air

From ASHRAE 62.2-2010

6.1 Adjacent Spaces

Measures shall be taken to minimize air movement across envelope components to occupiable spaces from garages, unconditioned crawl spaces, and unconditioned attics. Supply and balanced ventilation systems shall be designed and constructed to provide ventilation air directly from the outdoors.

ASHRAE Standard 62.2 requires that the air used for ventilation purposes come from the outdoors. Air may not be drawn in as transfer air from other spaces that are outside the occupiable space of the dwelling unit. This is to prevent airborne pollutants originating in those other spaces from

contaminating the dwelling unit. For example, drawing ventilation air from the garage could introduce VOCs, or pesticides into the indoor air. Drawing ventilation air from an unconditioned crawlspace could cause elevated allergen concentrations in the dwelling such as mold spores, insects or rodent allergens. Likewise, drawing air from an adjacent dwelling could introduce unwanted contaminants such as cooking products or cigarette smoke.

In addition to designing the ventilation system to draw air from the outdoors, the standard also requires that measures be taken to prevent air movement between adjacent dwelling units and between the dwelling unit and other adjacent spaces, such as garages. The measures can include air sealing of envelope components, pressure management and use of airtight recessed light fixtures. The measures must apply to adjacent units both above and below, as well as side by side.

Air sealing must include pathways in vertical components such as party walls and walls common to the unit and an attached garage; and in horizontal components such as floors and ceilings. Pipe and electrical penetrations are examples of pathways that require sealing.

Section 6.1 of ASHRAE 62.2 does not prohibit whole-building exhaust or local exhaust ventilation systems, and does not require mechanical systems to maintain pressure relationships with adjacent spaces except as required by Section 6.4 of ASHRAE 62.2.

B. Instructions and Labeling

> *From ASHRAE 62.2-2010*
>
> *6.2 Instructions and Labeling*
>
> *Information on the ventilation design and/or ventilation systems installed, instructions on their proper operation to meet the requirements of this standard, and instructions detailing any required maintenance (similar to that provided for HVAC systems) shall be provided to the owner and the occupant of the dwelling unit. Controls shall be labeled as to their function (unless that function is obvious, such as toilet exhaust fan switches). See Chapter 13 of Guideline 24[2] for information on instructions and labeling.*

There has been a history of ventilation systems that worked initially but failed due to lack of information for the occupant or lack of maintenance. So ASHRAE Standard 62.2 requires that the installer or builder provide written information on the basic ventilation concept being used and the expected performance of the system. These instructions must include how to operate the system and what maintenance is required.

Because the concept of a designed whole-building ventilation system may be new to a lot of occupants, the standard requires that ventilation system controls be labeled as to their function. No specific wording is mandated, but the wording needs to make clear what the control is for and the importance of operating the system. This may be as simple as “Ventilation Control” or might include wording such as “Operate whenever the house is in use” or “Keep on except when gone over 7 days”. If the system is designed to operate with a timer as an intermittent system, the labeling may need to be more complex. One acceptable option is to affix a label to the electrical panel that provides some basic system operation information.

C. Clothes Dryers

From ASHRAE 62.2-2010

6.3 Clothes Dryers

Clothes dryers shall be exhausted directly to the outdoors.

Exception: Condensing dryers plumbed to a drain.

All laundry rooms must be built with a duct to the outdoors, designed to be connected to the dryer. Devices which allow the exhaust air to be diverted into the indoor space to provide extra heating are not permitted. This requirement is consistent with existing clothes dryer installation and design standards.

In multi-family buildings, multiple dryer exhaust ducts can be connected to a common exhaust only when dampers are provided to prevent recirculation of exhaust air from one apartment to another.

Example 4-24 – Clothes Dryer Exhaust Diverter

Question

I am building a home which has been purchased prior to completion. The buyer has asked for an exhaust air diverter to be installed in the dryer exhaust duct. He says that it is wasteful of heating energy to exhaust the warm humid air to the outdoors during the winter when the furnace and humidifier are working. He says that the screen on the diverter will prevent excess dust being released into the space. Can I install the device for him?

Answer

If you do, you will not comply with the Standards. The device is specifically prohibited. Significant amounts of dust are released from such devices, and the moisture in the dryer exhaust can lead to humidity problems as well, particularly in warmer climates.

D. Combustion and Solid-Fuel Burning Appliances

From ASHRAE 62.2-2010

6.4 Combustion and Solid-Fuel Burning Appliances

Combustion and solid-fuel burning appliances must be provided with adequate combustion and ventilation air and vented in accordance with manufacturer's installation instructions, NFPA 54/ANSI Z223.1, National Fuel Gas Code, NFPA 31, Standard for the Installation of Oil-Burning Equipment, or NFPA 211, Standard for Chimneys, Fireplaces, Vents, and Solid-Fuel Burning Appliances, or other equivalent code acceptable to the building official.

Where atmospherically vented combustion appliances or solid-fuel burning appliances are located inside the pressure boundary, the total net exhaust flow of the two largest exhaust fans (not including a summer cooling fan intended to be operated only when windows or other air inlets are open) shall not exceed 15 cfm/100 ft² (75 Lps/100 m²) of occupiable space when in operation at full capacity. If the designed total net flow exceeds this limit, the net exhaust flow must be reduced by reducing the exhaust flow or providing compensating outdoor airflow. Atmospherically vented combustion appliances do not include direct-vent appliances.

ASHRAE Standard 62.2 requires that the vent system for combustion appliances be properly installed, as specified by the instructions from the appliance manufacturer and by the California Building Code. Compliance with the venting requirements will involve determining the type of vent material to be used, the sizing of the vent system, and vent routing requirements.

ASHRAE Standard 62.2 includes a provision intended to prevent backdrafting where one or more large exhaust fans are installed in a home with atmospherically vented or solid fuel appliances. If the two largest exhaust fans have a combined capacity that exceeds 15 cfm/100 ft² of floor area, then an

electrically interlocked makeup air fan must be installed so that the net exhaust is less than 15 cfm/100 ft² with either or both fans operating. This provision applies only when the atmospherically vented appliance is inside the pressure boundary of the house, and does not include a summer cooling fan which is designed to be operated with the windows open. Direct-vent appliances are not considered "atmospherically vented."

The 2 largest exhaust fans are normally the kitchen range hood and the clothes dryer (if located inside the dwelling unit pressure boundary). Many large range hoods, particularly down draft range hoods, have capacities of 1,000 cfm or more.

A problem with this requirement can be solved in one of three ways. First, all atmospherically vented combustion appliances can be moved outside the pressure boundary of the house (to the garage or other similar space). Second, the flowrate of one or more of the fans can be reduced so that the combined flow is less than 15 cfm/100 ft². Finally, a supply fan can be installed to balance the flow.

Example 4-25 – Large Exhaust Fan

Question

I am building a 3,600 ft^2custom home that has 4 bedrooms. The kitchen will have a high end range hood that has three speeds, nominally 1000 cfm, 1400 cfm and 1600 cfm. The house will be heated with a gas furnace located in the basement. If I am using a central exhaust fan for the whole-building ventilation of 90 cfm, and there is a clothes dryer installed, how large does my compensating supply fan need to be?

Answer

You must use the high speed value for the range hood of 1600 cfm. The clothes dryer will have a flow that is assumed to be 150 cfm for sizing purposes. These two flows must be added together for a total exhaust capacity of 1750 cfm. Since the whole-building ventilation fan is not one of the two largest exhaust fans, it does not figure into sizing the supply fan. Using the equation above, the supply fan must be at least 1750 cfm – 15 cfm x 3600 ft² / 100 ft² = 1210 cfm.

Example 4-26

Question

The same custom house will have the furnace located in the garage instead of the basement. Does that change anything?

Answer

The garage and the attic would both normally be considered outside the pressure boundary, so no compensating fan would be required. An exception to this would be if the attic is specially designed to be inside the pressure boundary, then the answer would be the same as for Example 4-23.

Example 4-27

Question

For this house, I need to keep the furnace in the basement. What are my options that would avoid using the compensating supply fan?

Answer

There are several things you could do. First, you could use direct vent appliances which would give higher efficiency and would not require a supply fan. You could use a lower capacity range hood,one that is less than 390 cfm (15 cfm x 3600 ft² / 100 ft² – 150 cfm).Use of supply-only

whole-building ventilation would allow the hood capacity to increase to 480 cfm (15 cfm x 3600 ft² / 100 ft² – 150 cfm + 90 cfm). There are also range hoods available in the commercial market that have integrated supply fans (or makeup air).One of these units would be acceptable too.

E. Garages

From ASHRAE 62.2-2010

6.5.1 Garages

When an occupiable space adjoins a garage, the design must prevent migration of contaminants to the adjoining occupiable space. Air seal the walls, ceilings, and floors that separate garages from occupiable space. To be considered air sealed, all joints, seams, penetrations, openings between door assemblies and their respective jambs and framing, and other sources of air leakage through wall and ceiling assemblies separating the garage from the residence and its attic area shall be caulked, gasketed, weather stripped, wrapped, or otherwise sealed to limit air movement. Doors between garages and occupiable spaces shall be gasketed or made substantially airtight with weather stripping.

Garages often contain numerous sources of contaminants. These include gasoline and exhaust from vehicles, pesticides, paints and solvents, etc. The Standards require that when garages are attached to the house, these contaminants be prevented from entering the house. The wall between the unit and garage (or garage ceiling in designs with living space above garages) shall be designed and constructed so that no air migrates through the wall or ceiling. The common doors and any air handlers or ducts located in the garage shall also be sealed, weather-stripped or gasketed. Use of an exterior door system would address this requirement.

If an air handling unit (furnace) is located in the garage, or return ducts are located in the garage (regardless of the air handler location) the entire duct system must meet the sealed and tested ducts criteria.

Example 4-28 – Garages

Question

The building designer located the air handler in the garage. The main return trunk from the dwelling is connected to the air handler. Is this acceptable?

Answer

Yes, provided that the duct system is leak tested at 25 Pa. and sealed, if necessary, to have leakage no greater than 6 percent of the total fan flow.

Example 4-29

Question

The building designer located the air handler in the dwelling unit. A return duct runs through the garage to a bedroom above the garage. The duct has only 4 ft of length in the garage. How do I test that length of the duct?

Answer

This design is allowed but the entire duct system must be leak tested at 25 Pa. and sealed, if necessary, to have leakage no greater than 6 percent of the total fan flow. There is no test available to leak test only the garage portion of the duct system.

F. Ventilation Opening Area

From ASHRAE 62.2-2010

6.6 Ventilation Opening Area

Spaces shall have ventilation openings as listed below. Such openings shall meet the requirements of Section 6.8.

Exception: Spaces that meet the local ventilation requirements set for bathrooms in Section 5.

6.6.1 Habitable Spaces

Each habitable space shall be provided with ventilation openings with an openable area not less than 4% of the floor area, nor less than 5 ft² (0.5 m^2).

6.6.2 Toilets and Utility Rooms

Toilets and utility rooms shall be provided with ventilation openings with an openable area not less than 4% of the room floor area, nor less than 1.5 ft² (0.15 m^2).

Exceptions: (1) Utility rooms with a dryer exhaust duct; (2) toilet compartments in bathrooms.

The whole-building mechanical ventilation is intended to provide adequate ventilation to typical new homes under normal circumstances. On occasion, however, houses experience unusual circumstances where high levels of contaminants are released into the space. When this occurs, some means of providing the significantly higher levels of ventilation required to remove the contaminants is needed. Operable windows are the most likely means of providing the additional ventilation.

This section of ASHRAE Standard 62.2 requires ventilation openings in habitable spaces, toilets and utility rooms. Ventilation openings usually means operable windows, although a dedicated non-window opening for ventilation is acceptable. Spaces that meet the local exhaust requirements are exempted from this requirement.

G. Habitable Spaces

Habitable spaces are required to have ventilation openings with openable area equal to at least 4 percent of the space floor area (but not less than 5 ft^2). Rooms people occupy are considered habitable space. Dining rooms, living rooms, family rooms, bedrooms and kitchens are considered habitable space. Closets, crawl spaces, garages and utility rooms are generally not. If the washer and dryer are located in an open basement that is also the family room, it would be considered habitable space.

The openings do not have to be provided by windows. They can also be provided by operable, insulated, weather-stripped panels.

Ventilation openings, which include windows, skylights, through-the-wall inlets, window air inlets, or similar devices, shall be readily accessible to the occupant. This means that the occupant must be able to operate the opening without having to climb on anything. An operable skylight must have some means of being operated while standing on the floor: a push rod, a long crank handle, or an electric motor.

If a ventilation opening is covered with louvers or otherwise obstructed, the openable area is the unobstructed free area through the opening.

Example 4-30 – Ventilation Openings

Question

I am building a house with a 14 ft. by 12 ft. bedroom. What size window do I need to install?

Answer

It depends on the type of window. The standard requires that the openable area of the window, not the window unit, be 4 percent of the floor area, or 14 ft x 12 ft' x 0.04 = 6.7 ft². The fully opened area of the window or windows must be greater than 6.7 ft^2. The requirement for this example can be met using two double hung windows each with a fully opened area of 3.35 ft^2. Any combination of windows whose opened areas add up to at least 6.7 ft^2 will meet the requirement.

Example 4-31 – Ventilation Opening Louvers

Question

There are fixed wooden louvers over a window in a bedroom. The louvers have slats that are 1/8 in thick, and they are spaced 1 inch apart. What is the reduction in openable area?

Answer

Assuming that the 1 inch spacing was measured perpendicular to the slats (the correct way), then the reduction is the slat thickness divided by the spacing, or 1/8 inch. So the credited opening area is the original opening area x (1 inch – 1/8 inch)/1 inch = 7/8 inch of the original opening area.

H. Minimum Filtration

From ASHRAE 62.2-2010

6.7 Minimum Filtration

Mechanical systems that supply air to an occupiable space through ductwork exceeding 10 ft (3 m) in length and through a thermal conditioning component, except evaporative coolers, shall be provided with a filter having a designated minimum efficiency of MERV 6, or better, when tested in accordance with ANSI/ASHRAE Standard 52.2, Method of Testing General Ventilation Air-Cleaning Devices for Removal Efficiency by Particle Size, or a minimum Particle Size Efficiency of 50% in the 3.0-10 µm range in accordance with AHRI Standard 680, Performance Rating of Residential Air Filter Equipment. The system shall be designed such that all recirculated and mechanically supplied outdoor air is filtered before passing through the thermal conditioning components. The filter shall be located and installed in such a manner as to facilitate access and regular service by the owner.

ASHRAE Standard 62.2 requires that particulate air filtration of no less than MERV 6 efficiency is installed in any HVAC system having more than 10 ft of ductwork. The particulate filter must be installed such that all of the air circulated through the furnace or air handler is filtered prior to passing through the thermal conditioning portion of the system. In addition, the standard requires that the filter be located and installed for easy access and service by the homeowner. Lastly, the standard requires that the filter cartridge be sized to operate at no greater than 0.1 inch water column when clean, or that the air handler be selected to handle greater pressure loss without undue restriction on airflow.

Many residential units have factory installed filter cartridges that comply with this minimum filtration requirement. These are normally 1-inch thick with a pleated media configuration to attain the proper efficiency and airflow performance. If the filter bank is to be field installed, the sizing selection is critical to HVAC system performance.

The filter retainer section must be easily accessible by the homeowner to

assure continued monitoring and replacement. The filter bank may be located in the air handler/furnace (1); in the return air plenum near the air handler (2a); in the return air plenum with a deep pleat cartridge (2b); angled across the return air plenum to enhance cross-section (3); or situated in a wall return grille (4). See Figure 4-24.

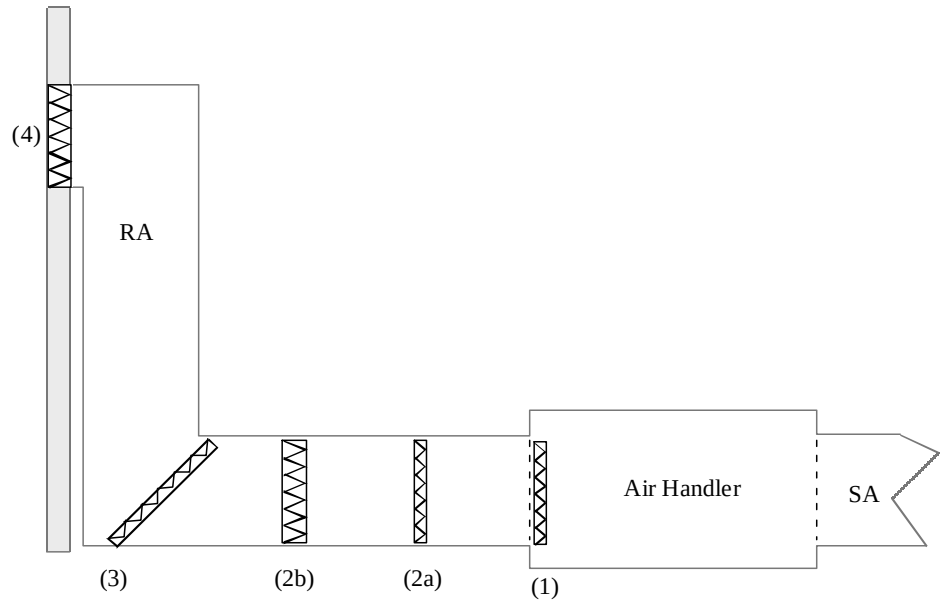

Figure 4-24 – Filter Location Options

The MERV 6 pleated filter provides enhanced particulate arrestance, but also provides longer service life than the conventional low efficiency panel filter. Typically, the pleated type filter will last 3 months or longer, depending upon operating conditions, as compared to the typical 1 month life cycle of disposable fiberglass filters. The deeper pleated versions will typically provide even longer life cycles, up to 1 year or more.

Example 4-32– Filter Sizing

Question

I am installing a 1200 cfm furnace in a new house. It has a 20 inches x 20 inches filter furnished and installed in the unit. Is this in compliance?

Answer

Yes, you may assume that the equipment manufacturer has selected a compliant filter efficiency and pressure drop to match the features of their air handler.

Example 4-33

Question

What if the above unit has no filter installed but recommends a 20 inches x 20 inches filter size? What filter do I select?

Answer

A number of manufacturers produce a 1-inch deep MERV 6 for use in slide-in tracks and return air grills. If the pressure drop information is not furnished with the filter to assist with the selection, oversize the filter by at least one size multiple beyond the normal recommendation of the manufacturer. In this case, a filter selection of 20 inches" x 25 inches to over-size the filter would reduce the face velocity by 25 percent, which in turn reduces the initial pressure drop by almost 50 percent.

Example 4-34

Question

For the same 1200 cfm furnace, what other options do I have?

Answer

For any filter, the pressure drop, efficiency, and life cycle can all be affected by velocity control. By enlarging the filter cartridge size, the approach velocity is decreased along with the pressure drop. If the depth of the filter is increased, likewise the air velocity through the media is decreased, and that, in turn, substantially reduces the actual pressure drop. Doubling the pleat depth will halve the velocity through the media and decrease pressure drop by up to 75 percent.

Example 4-35

Question

I am installing an HVAC system with the filter to be installed at the return air grill. What should I do to accommodate a 1 inch pleated MERV 6 filter?

Answer

You can reduce the face velocity and related pressure drop by employing multiple return air grilles. By doubling or tripling the return air filter surface area, the pressure drop is reduced by 75 percent or greater. Alternatively, you can increase the size of the return air grill similar to what was discussed in Example 4-31, above, or increase the depth of the filter as discussed in Example 4-32

Example 4-36

Question

I am installing a ductless split system in a space that is being added on to the house. Must I use the designated MERV 6 filter?

Answer

No, the requirement does not apply since there is no ductwork attached to the unit.

Example 4-37

Question

My builder supply house has only MERV 8 or greater efficiency filters. Is this in compliance?

Answer

Yes, this is a better efficiency. However, higher MERV filters usually have higher pressure drop. Make sure that the pressure drop does not exceed the MERV 6 specified performance level and adjust the size and related air velocity accordingly.

I. Air Inlets

From ASHRAE 62.2-2010

Section 6.8 Air Inlets

Air inlets that are part of the ventilation design shall be located a minimum of 10 ft (3 m) from known sources of contamination such as a stack, vent, exhaust hood, or vehicle exhaust. The intake shall be placed so that entering air is not obstructed by snow, plantings, or other material. Forced air inlets shall be provided with rodent/insect screens (mesh not larger than 1/2 inch).

Exceptions:

a Ventilation openings in the wall may be as close as a stretched-string distance of 3 ft (1 m) from sources of contamination exiting through the roof or dryer exhausts.

b No minimum separation distance shall be required between windows and local exhaust outlets in kitchens and bathrooms.

c Vent terminations covered by and meeting the requirements of the National Fuel Gas Code (NFPA 54/ANSI Z223.1, National Fuel Gas Code) or equivalent.

When the ventilation system is designed with air inlets, the inlets must be located away from locations that can be expected to be sources of contamination. The minimum separation is 10 ft. Inlets include not only inlets to ducts, but windows which are needed to the opening area.

The Standards list some likely sources of contaminants. For typical residential applications, the sources will include:

- Vents from combustion appliances
- Chimneys
- Exhaust fan outlets
- Barbeque grills
- Locations where vehicles may be idling for any significant length of time
- Any other locations where contaminants will be generated

The Standards also require that air intakes be placed so that they will not become obstructed by snow, plants, or other material. Forced air inlets must also be equipped with insect/rodent screens, where the mesh is no larger than 1/2 inch.

There are three exceptions to the separation requirements.

1. Windows or ventilation openings in the wall can be as close as three feet to sources of contamination which exit through the roof or to dryer exhausts.
2. There is no minimum distance between windows and the outlet of a local exhaust outlet from kitchens or bathrooms.
3. Vent terminations which meet the requirements of the National Fuel Gas Code, which has its own separation and location requirements, do not need to meet the requirements.

4.6.6 Air Moving Equipment (Section 7 of ASHRAE 62.2)

> *From ASHRAE 62.2-2010*
>
> *Section 7.1 Selection and Installation*
>
> *Ventilation devices and equipment shall be tested in accordance with ANSI/ASHRAE Standard 51/AMCA 210, Laboratory Methods of Testing Fans for Aerodynamic Performance Rating, and ANSI/AMCA Standard 300, Reverberant Room Method for Sound Testing of Fans, and rated in accordance with the airflow and sound rating procedures of the Home Ventilating Institute (HVI 915, Procedure for Loudness Rating of Residential Fan Products, HVI 916, Air Flow Test Procedure, and HVI 920, Product Performance Certification Procedure Including Verification and Challenge). Installations of systems or equipment shall be carried out in accordance with manufacturers' design requirements and installation instructions.*

Equipment used to meet the whole-building ventilation requirements or the local ventilation exhaust requirements shall be rated to deliver the required airflow, and shall have sound ratings that meet the requirements of this section.

A. Selection and Installation

ASHRAE Standard 62.2 requires that equipment used to comply with the standard be selected based on tested and certified ratings of performance for airflow and sound. When selecting fans for use in meeting the requirements of the standard, you must check the Home Ventilating Institute (HVI) certified products directory to confirm that the equipment you select has been tested, and the rated performance meets the requirements. The HVI-Certified Products Directory can be viewed at the following link:

www.hvi.org/resourcelibrary/proddirectory.html

In addition, the Standard requires that the fans be installed in accordance with the manufacturer's instructions. You must review the installation instructions and other literature shipped with the fan, and make sure that the installation complies with those instructions.

B. Sound Ratings for Fans

> *From ASHRAE 62.2-2010*
>
> *Section 7.2 Sound Ratings for Fans)*
>
> *Ventilation fans shall be rated for sound at no less than the minimum airflow rate required by this standard, as noted below. These sound ratings shall be at minimum of 0.1 in. w.c. (25 Pa) static pressure in accordance with the HVI procedures referenced in Section 7.1.*
>
> *Section 7.2.1 Whole-Building or Continuous Ventilation Fans.*
>
> *These fans shall be rated for sound at a maximum of 1.0 sone.*
>
> *Section 7.2.2 Intermittent Local exhaust Fans.*
>
> *Fans used to comply with Section 5.2 shall be rated for sound at a maximum of 3 sone, unless their maximum rated airflow exceeds 400 cfm (200 L/s).*
>
> *Exception: HVAC air handlers and remote-mounted fans need not meet sound requirements. To be considered for this exception, a remote-mounted fan must be mounted outside the habitable spaces, bathrooms, toilets, and hallways, and there must be at least 4 ft (1 m) of ductwork between the fan and the intake grille.*

One common reason for not using ventilation equipment, particularly local exhaust fans, is the noise they create. To address this, ASHRAE Standard 62.2 requires that certain fans be rated for sound, and that installed fans shall have ratings below specified limits. The sound rating must be done at an airflow that is no less than the airflow that the fan must provide to meet the ventilation airflow requirement.

Because of the variables in length and type of duct and grille, there is no clearly repeatable way to specify a sound level for ventilation devices that are not mounted in the ceiling or wall surface. Consequently, air handlers, HRV/ERVs, inline fans and remote fans are exempted from the sound rating requirements that apply to surface-mounted fans. However, to reduce the amount of fan and/or motor noise that could come down the duct to the grille, the Standards sets a minimum of 4 ft of ductwork between the grille and the ventilation device. This may still produce an undesirable amount of noise for the occupant, especially if hard metal duct is used. Flexible insulated duct or a sound attenuator to will reduce the transmitted sound into the space.

Continuous Ventilation Fans (surface mounted fans)

Continuously operated fans shall be rated at 1.0 sone or less. This 1.0 sone requirement applies to continuous whole-building ventilation fans, and also to continuous local ventilation exhaust fans.

Intermittent Fans (surface mounted fans)

Intermittently operated whole-building ventilation fans shall be rated at a maximum of 1.0 sone. Intermittently operated local exhaust fans shall be rated at a maximum of 3.0 sone, unless the maximum rated airflow is greater than 400 cfm.

Thus, ASHRAE Standard 62.2 extends the requirement for quiet fans to include range hoods and regular bath fans, not just whole-building ventilation system fans. The whole-building fan or other combined systems that operate continuously to provide whole-building ventilation must be rated at 1.0 sone or less, but intermittent local ventilation exhaust fans, including intermittently operated bath fans, must be rated at a maximum of 3.0 sones. Range hoods must also be rated at 3.0 sones or less, but this is at their required “working speed” of 100 cfm. Most range hoods have maximum speeds of much more than 100 cfm, but 100 cfm is the minimum airflow that is required by the Standards.

C. Airflow Rating

From ASHRAE 62.2-2010

Section 4.3 Airflow Measurement

The airflows required by this Section is the quantity of outdoor ventilation air supplied and/ or indoor air exhausted by the ventilation system as installed and shall be measured using a flow hood, flow grid, or other airflow measuring device. Ventilation airflow of systems with multiple operating modes shall be tested in all modes designed to meet this section.

Section 5.4 Airflow Measurement

The airflow required by this section is the quantity of indoor air exhausted by the ventilation system as installed and shall be measured using a flow hood, flow grid, or other airflow measuring device.

Exception to Section 5.4

The airflow rating, according to Section 7.1, at a pressure of 0.25 in. w.c. (62.5 Pa) may be used, provided th duct sizing meets prescriptive requirements of Table 5.3 or manufacturer’s design criteria.

Compliance with the ventilation airflow requirements for a ventilation system can be demonstrated in one of two ways:

1. The ventilation system can be tested using an airflow measuring device after completion of the installation to confirm that the delivered ventilation airflow meets the requirement. The builder/installer must also list the result of the airflow measurement(s) for the ventilation fan(s) on the Installation

Certificate (CF2R-MCH-27) for the building. The ventilation airflow must be measured and reported for any/all ventilation system types installed in the building, except for those described in item 2 below.

2. Simple exhaust systems can comply by performing and documenting an inspection of the installation to verify conformance to a prescriptive requirement that the fan has a certified airflow rating that meets or exceeds the required ventilation airflow, and the ducts for the ventilation system meet either the fan manufacturers published duct design specifications, or the prescriptive duct design requirements given in Table 4-167 below (Table 7.1 of ASHRAE 62.2). The builder/installer must also list the description of the installed fan equipment and duct design criteria for the ventilation fan(s) on the Installation Certificate (CF2R-MCH-27) for the building.

The fan's certified airflow rating must be based on tested performance at the 0.25 inch w.c. operating point. The certified airflow rating of a ventilation device is generally available from the manufacturer, and is also available for hundreds of products in the Home Ventilating Institute (HVI) Certified Products Directory at the HVI website (www.hvi.org). Manufacturers can choose whether to provide the certified data for posting at the HVI website, but all of them should have available the rated data at 0.25 inches of water column static pressure.

If the manufacturer's duct system design specifications are utilized for compliance, the enforcement agency may require that the manufacturer's published system design documentation be provided for use in inspection of the installation(s).

The prescriptive duct design criteria given in Table 4-16 provide maximum duct lengths based on various duct diameters and duct type. As can be seen, the higher the flow, the larger in diameter or shorter in length the duct has to be. Also note that smooth duct can be used to manage longer duct runs. Interpolation and extrapolation of Table 4-16 (Table 7.1 of ASHRAE 62.2) is not allowed. For airflow values not listed, use the next higher value. The table is not applicable for systems with airflow greater than 125 cfm at 62 Pa (0.25 inches of water column) static pressure.

Table 4-16 – Prescriptive Duct Sizing for Single Fan Exhaust Systems (from 62.2,Table 7.1)

Duct Type	**Flex Duct**				**Smooth Duct**			
Fan Rating 62 Pa (cfm@ 0.25 in. w.c.)	50	80	100	125	50	80	100	125
Diameter inch	Maximum Length ft.							
3	X	X	X	X	5	X	X	X
4	70	3	X	X	105	35	5	X
5	NL	70	35	20	NL	135	85	55
6	NL	NL	125	95	NL	NL	NL	145
7 and above	NL	NL	NL	NL	NL	NL	NL	NL

This table assumes no elbows. Deduct 15 feet of allowable duct length for each elbow.

NL = no limit on duct length of this size.

X = not allowed, any length of duct of this size with assumed turns and fitting will exceed the rated pressure drop.

Example 4-38 – Prescriptive Duct Sizing

Question

I need to provide 75 cfm of continuous ventilation, which I plan to do using a central exhaust fan. I plan to connect the fan to a roof vent termination using flex duct. The duct will be about 8 ft long, with no real elbows, but some slight bends in the duct. What size duct do I need to use?

Answer

From Table 4-16, using the 80 cfm, flex duct column, we find that the maximum length with 4 inch duct is 3 ft, so you cannot use 4 inches duct. With 5 inch duct the maximum length is 70 ft, so that will clearly be adequate. Even if the bend in the duct is treated as an elbow, the allowable length only drops to 55 ft, more than adequate for the 8 ft required.

Example 4-39

Question

For the situation in example 4-36, again providing 75 cfm, what size duct would I need if smooth metal duct were used? In this case the total length would increase to about 10 ft, and there would be 2 elbows.

Answer

Using the 80 cfm, smooth duct column of Table 4-16, we find that the maximum length of 4 inches duct is 35 ft. Subtracting 15 ft for each of the 2 elbows leaves us with 5 ft, which is not long enough. With 5 inch duct the maximum length is 135 ft. Subtracting 15 ft for each of the 2 elbows leaves us with 105 ft, so that will clearly be adequate.

Example 4-40

Question

I will need a 100 cfm range hood. I have two possible duct routings. One is 15 ft long and will require 3 elbows. The other is 35 ft long but only requires one elbow. What size flex duct do I need to use?

Answer

First, let's take the 2 routings and add in the correction for the elbows. Elbow corrections can be either added to the desired length or subtracted from the allowable length. In this case, we know the desired length, so we'll add the elbows. We get 15 ft plus 3 times 15 ft for a total of 60 ft, or 35 ft plus 15 ft equals 50 ft.

Looking at Table 4-16, in the 100 cfm, flex duct column, we find that the maximum length with 5 inches duct is 35 ft, which is less than the adjusted length for either routing. With 6 inches duct, the maximum length is 125 ft, longer than either adjusted length. 6 inch duct would need to be used for either routing. *Note:* The building code may not allow flex duct to be used for the range hood, in which case smooth duct would be required. For smooth duct, 5 inches would be acceptable.

D. Multi-Branch Exhaust Ducting

From ASHRAE 62.2-2010

Section 7.3 Multi-Branch Exhaust Ducting (62.2 text)

If more than one of the exhaust fans in a dwelling unit shares a common exhaust duct, each fan shall be equipped with a back-draft damper to prevent the recirculation of exhaust air from one room to another through the exhaust ducting system. Exhaust fans in separate dwelling units shall not share a common exhaust duct.

ASHRAE Standard 62.2 contains restrictions on several situations where multiple exhausts are connected through a combined duct system. These restrictions are intended to prevent air from moving between spaces through the exhaust ducts.

The first restriction is that if more than one exhaust fan in a dwelling shares a common duct, then each fan must be equipped with a backdraft damper so that air exhausted from one bathroom or unit is not allowed to go into another space. Exhaust fans in multiple dwelling units may not share a common duct.

The other restriction applies to remote fans serving more than one dwelling unit. Sometimes a single remote fan or HRV/ERV will exhaust from several units in a multifamily building. This section does not preclude the use of that type of system, but it does require that either the shared exhaust fan operate continuously or that each unit be equipped with a backdraft damper so that air cannot flow from unit to unit when the fan is off.

In multifamily buildings, fire codes may impose additional restrictions.

4.7 Alternative Systems

4.7.1 Hydronic Heating Systems

Hydronic heating is the use of hot water to distribute heat. Hydronic heating is discussed in this compliance manual as an "Alternative System" because it is much less common in California than in other parts of the United States.

A hydronic heating system consists of a heat source, which is either a boiler or water heater, and a distribution system. There are three main types of hydronic distribution systems, and they may be used individually or in combination:

baseboard convectors or radiators, hot water air handlers, and radiant panel heating systems. These three options are illustrated in Figure 4-25.

Baseboard convectors or radiators are most effective when mounted near the floor. Cool air rises by gravity over heated panels or finned tubes and warms the air in the room. These devices also increase the mean radiant temperature of the space, improving comfort. Baseboard convectors or radiators do not require ducting.

Air handlers consist of a blower and finned tube coil enclosed in a sheet metal box (similar to a typical residential furnace), and may be ducted or non-ducted. Air handlers may also include refrigerant coils for air conditioning. Some air handlers are compact and can fit under cabinets.

Radiant panels may be mounted on or integrated with floors, walls, and ceilings. Radiant floor panels are most typical. See the separate section below for additional requirements specific to radiant floor designs.

4.7.2 Mandatory Requirements

For hydronic heating systems without ducts, the mandatory measures cover only pipe insulation, tank insulation, and boiler efficiency. Otherwise, for fan coils with ducted air distribution, the mandatory air distribution measures also apply as described in Section 4.4. And for combined hydronic systems, as described below, mandatory water heating requirements also apply to the water heating portion of the system.

A. Pipe and Tank Insulation

§150.0(j) Water System Pipe and Tank Insulation and Cooling Systems Line Insulation, §123.0 Requirements for Pipe Insulation

The typical residential hydronic heating system operating at less than 200° F must have at least 1 inch (25 mm) of nominal R-4 insulation on pipes up to 2 inches (50 mm) in diameter and 1.5 inch (38 mm) of insulation on larger pipes. For other temperatures and pipe insulation characteristics see Tables 120.3-A in the Standards.

There are a few exceptions where insulation is not required: sections of pipes where they penetrate framing members; pipes that provide the heat exchange surface for radiant floor heating; piping in the attic that is covered by at least 4 inches (100 mm) of blown insulation on top; and piping installed within walls if all the requirements for Insulation Installation Quality are met (see Chapter 3 Building Envelope Requirements).

If the system includes an unfired hot water storage tank, then the tank must be either wrapped with R-12 insulation or insulated internally to at least R-16.

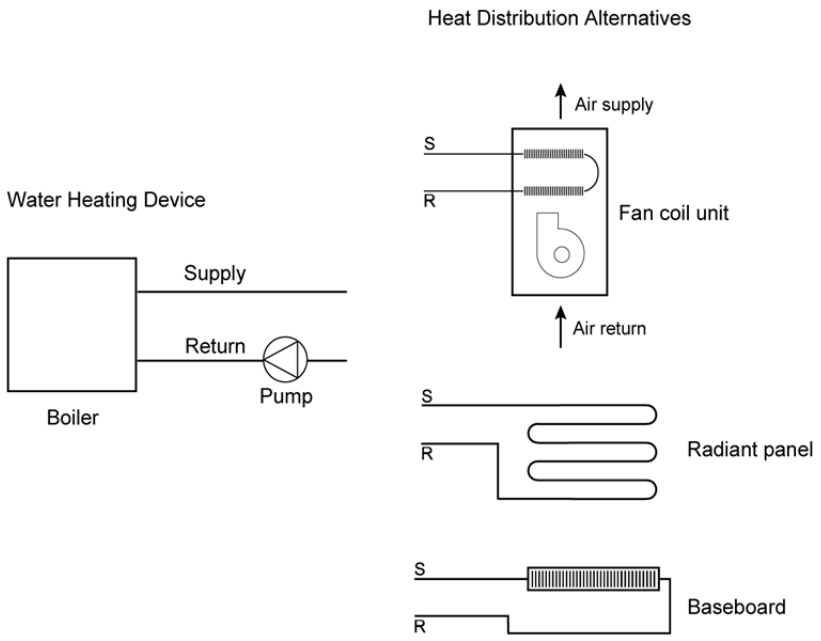

Figure 4-25 – Hydronic Heating System Components

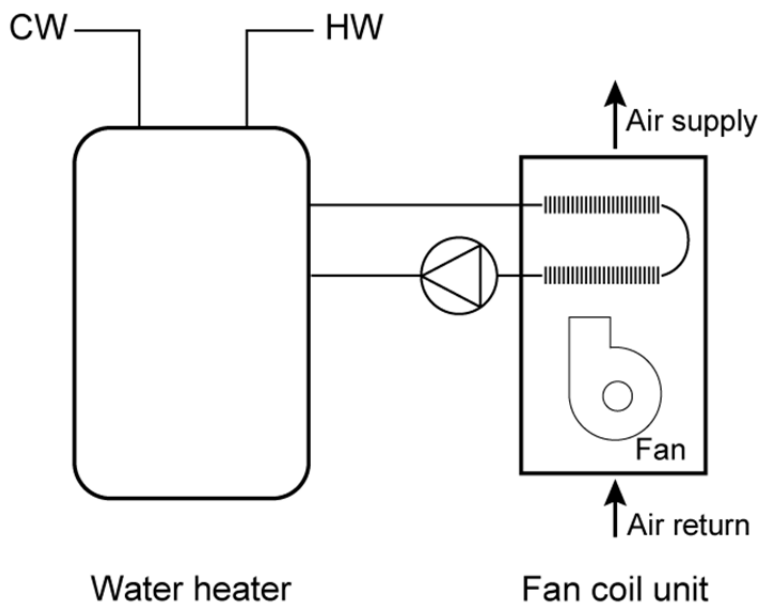

Figure 4-26 – Combined Hydronic System with Water Heater as Heat Source

For pipes in hydronic heating systems that operate at pressure greater than 15 psi, the requirements of §120.3 apply. These are the same requirements that apply to nonresidential piping systems.

Gas or oil boilers of the size typically used for residential space heating (less than 300,000 Btu/h capacity) must be rated with an AFUE of 80 percent or greater (*See Appliance Efficiency Regulations, Title 20 for minimum efficiencies of other heating equipment).* A gas or oil water heater may also be used as a dedicated source for space heating. Other hot water sources, including heat pumps or electric resistance water heaters, are not allowed for use in dedicated space heating systems. Therefore, some water heaters may be used for space heating only if used as part of a combined hydronic system as described below. In that case, the mandatory water heater requirements apply.

Thermostat requirements also apply to hydronic systems as described in Section 4.5.1.

B. Prescriptive Requirements

There are no specific prescriptive requirements that apply to hydronic systems. However, if the system has a fan coil with ducted air distribution, the relevant prescriptive requirements apply, including duct insulation and duct sealing.

C. Compliance Options

Credit for choosing a hydronic heating system is possible using the performance compliance method. The standard design is assumed to have a furnace and ducted air distribution system. Therefore, hydronic systems without ducts can take credit for avoiding duct leakage penalties. In addition, minimizing the amount of pipe outside of conditioned space will provide some savings. Hydronic heating compliance calculations are described in the Residential ACM Manual.

If the proposed hydronic system includes ducted air distribution, then the associated compliance options described earlier in this chapter may apply, such as adequate airflow (if there is air conditioning) and supply duct location.

A “combined hydronic” system is another compliance option that is possible when using the performance method. Combined hydronic heating refers to the use of a single water heating device as the heat source for both space and domestic hot water heating.

There are two types of combined hydronic systems. One uses a boiler as a heat source for the hydronic space heating system. The boiler also heats domestic water by circulating hot water through a heat exchanger in an indirect-fired water heater.

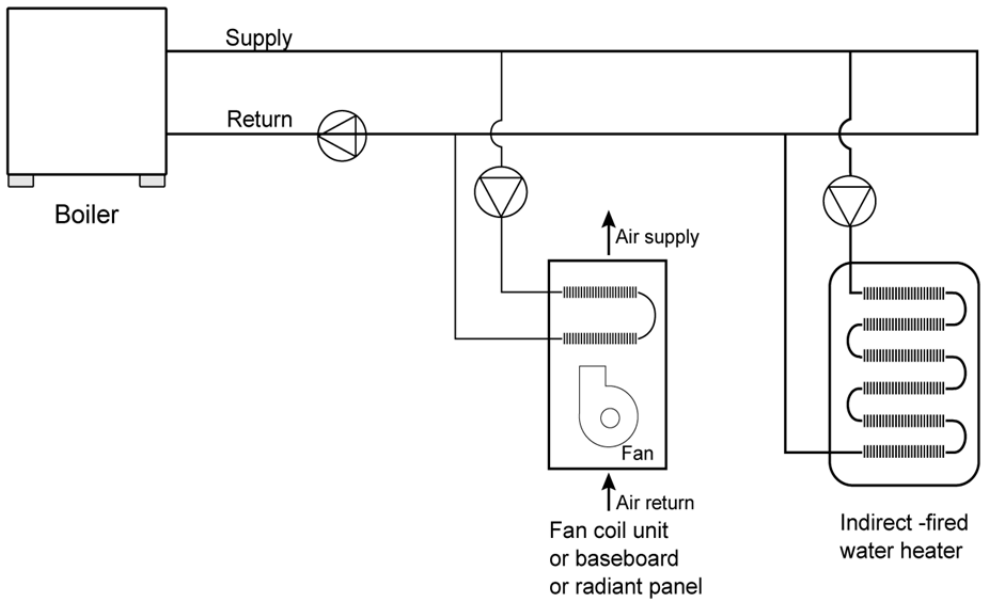

Figure 4-27 – Combined Hydronic System with Boiler and Indirect Fired Water Heater

The other type of hydronic heating uses a water heater as a heat source. The water heater provides domestic hot water as usual. Space heating is accomplished by circulating water from the water heater through the space heating delivery system. Sometimes a heat exchanger is used to isolate potable water from the water circulated through the delivery system. Some water heaters have built-in heat exchangers for this purpose.

For compliance calculations, the water heating function of a combined hydronic system is analyzed for its water heating performance as if the space heating function were separate. For the space heating function, an “effective” AFUE or HSPF rating is calculated. These calculations are performed automatically by the compliance software

4.7.3 Radiant Floor System

One type of distribution system is the radiant floor system, either hydronic or electric, which must meet mandatory insulation measures (see below). Radiant floors may take one of several forms. Tubing or electric elements for radiant floor systems may be:

- Embedded in a concrete floor slab,
- Installed over the top of a wood sub-floor and covered with a concrete topping,
- Installed over the top of wood sub-floor in between wood furring strips, or
- Installed on the underside surface of wood sub-floor

In the latter two types of installations, aluminum fins are typically installed to spread the heat evenly over the floor surface, and to reduce the temperature of the water as required. All hydronic systems use one or more pumps to circulate

hot water. Pumps are controlled directly or indirectly by thermostats, or by special outdoor reset controls.

A. Mandatory Insulation Measures

§110.8(g) Insulation Requirements for Heated Slab Floors

Standards Table 118.0-A Slab Insulation Requirements for Heated Slab-On-Grade Floors

Table 4-18 – Slab Insulation Requirements for Heated Slabs

Location of Insulation	Orientation of Insulation	Installation Criteria	Climate Zone	Insulation R-value
Outside edge of heated slab, either inside or outside the foundation wall	Vertical	From the level of the top of the slab, down 16 inches or to the frost line, whichever is greater? Insulation may stop at the top of the footing where this is less than the required depth. For below-grade slabs, vertical insulation shall be extended from the top of the foundation wall to the bottom of the foundation (or the top of the footing) or frost line, whichever is greater.	1-15	5
			16	10
Between heated slab and outside foundation wall	Vertical and Horizontal	Vertical insulation from the top of the slab at the inside edge of the outside wall down to the top of the horizontal insulation. Horizontal insulation from the outside edge of the vertical insulation extending 4 feet toward the center of the slab in a direction normal to the outside of the building in the plan view.	1-15	5
			16	10 vertical and 7 horizontal

Radiant floor systems in concrete slabs must have insulation between the heated portion of the slab and the outdoors.

When space heating hot water pipes or heating elements are set into a concrete slab-on-grade floor, slab-edge insulation from the level of the top of the slab, down 16 inches (200 mm) or to the frost line, whichever is greater (insulation may stop at the top of the footing, where this is less than the required depth), or insulation installed down from the top of the slab and wrapping under the slab for a minimum of 4 ft toward the middle of the slab, is required. The required insulation value for each of these insulating methods is either R-5 or R-10 depending on climate zone as shown in Table 4–18. Any part of the slab extending outward horizontally must be insulated to the level specified in Table 4–18.

When using the performance compliance method with slab-on-grade construction, the standard design includes slab edge insulation as described above using the F-factors in Reference Joint Appendix JA4, Table 4.4.8.

When space heating hot water pipes or heating elements are set into a lightweight concrete topping slab laid over a raised floor, insulation must be applied to the exterior of any slab surface from the top of the slab where it meets the exterior wall, to the distance below ground level described in Table 4–18. If the slab does not meet the ground on its bottom surface, the specified insulation level must be installed on the entire bottom surface of the raised slab. Any part of the slab extending outward horizontally must be insulated to

the level specified in Table 4–18. For lightweight slabs installed on raised floors and inside exterior walls, the overall wall R-value and overall floor R-value (determined as 1/(U-factor)) may be counted toward meeting the minimum R-value requirements specified in Table 4–18.

Raised floor insulation that meets the mandatory minimum R-value for wood floor assemblies also meets the requirement for insulation wrapping under the lightweight topping slab.

Slab edge insulation applied to basement or retaining walls (with heated slab below grade) must be installed so that insulation starts at or above ground level and extends down to the bottom of the foundation or to the frost line, whichever is greater.

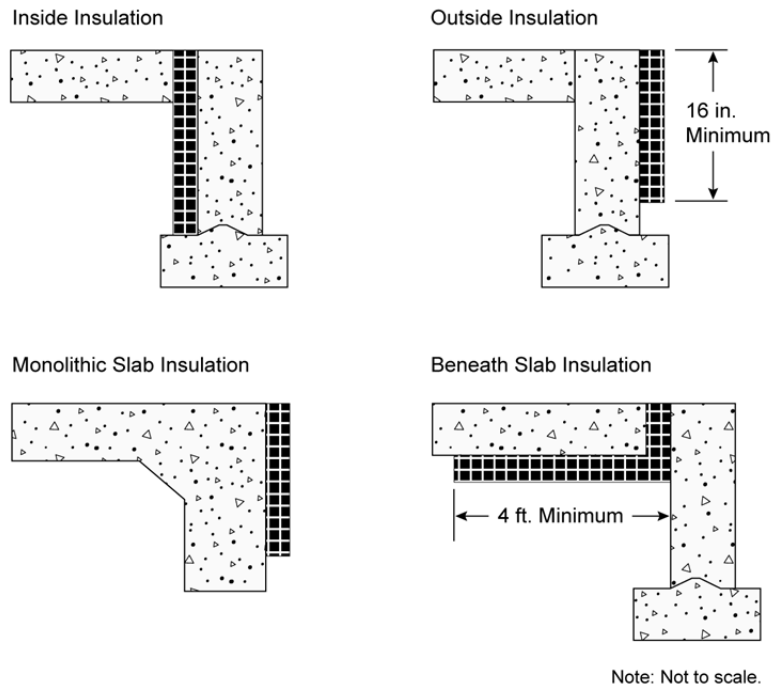

Figure 4-28 – Heated Slab-On-Grade Floor Insulation Options

Local conditions (such as a high water table) may require special insulation treatment in order to achieve satisfactory system performance and efficiency. To determine the need for additional insulation, follow the recommendations of the manufacturer of the hydronic tubing or heating element being installed. Where there is a danger of termite infestation, install termite barriers, as required, to prevent hidden access for insects from the ground to the building framing.

In addition to the insulation R-value requirements, the Standards, in Section 110.8(g)1 also set mandatory measures related to moisture absorption properties of the insulation and protection of the insulation from physical damage or pest intrusion.

Example 4-41

Question

My client wants a dedicated hydronic-heating system (space heating only), but a few things are unclear: (1) What piping insulation is required? (2) Can I use any compliance approach? (3) Do I have to insulate the slab with slab edge insulation? and (4) What special documentation must be submitted for this system type?

Answer

(1) The supply lines not installed within a concrete radiant floor must be insulated in accordance with §150.0(j)2—1.0 inch (25mm) of nominal R-4 on pipes that are 2 inch (50 mm) or less in diameter, and 1.5 inch (38 mm) for pipes greater than 2 inch (50 mm) in diameter.

(2) You can use any compliance approach, but the boiler must meet the mandatory efficiency 80 percent AFUE.

(3) The slab edge insulation shown in Table 4–18 is required only when the distribution system is a radiant floor system (pipes in the slab). When this is the case the insulation values shown are mandatory measures (no modeling or credit).

(4) No special documentation is required.

Example 4-42

Question

What are the slab edge insulation requirements for a hydronic-heating system with the hot water pipes in the slab?

Answer

The requirements for slab edge insulation can be found in §110.8 and §150.0(l).

Material and installation specifications are as follows:

• insulation values as shown in Table 4–18

• protected from physical damage and ultra-violet light deterioration,

• water absorption rate no greater than 0.3 percent (ASTM-C272), and

• water vapor permeance no greater than 2.0 per inch (ASTM-E96-90).

4.7.4 Evaporative Cooling

Evaporative coolers provide cooling to a building by either passing outdoor air through a wetted evaporative media (direct evaporative cooler), by indirect cooling through a non-porous heat exchanger separating evaporatively cooled secondary air from outdoor air, or by a combination indirect-direct system that combines an indirect heat exchanger with a downstream direct evaporative process. Although direct coolers are the most common systems available, the more advanced indirect and indirect-direct systems offer generally lower supply air temperatures with less moisture addition to indoor space. For the 2013 Energy Efficiency Standards, performance credit is allowed only for indirect and indirect-direct evaporative cooling systems. All coolers receiving credits within the ACM Manual must be listed in the Energy Commission's Title 20 Evaporative Cooler appliance database[1].

http://www.appliances.energy.ca.gov/

Evaporative coolers may be used with any compliance approach. In the prescriptive compliance approach, all evaporative coolers are treated as a minimum efficiency 13.0 SEER air conditioner.

In the performance approach the compliance software uses an hourly model based on unit effectiveness, supply airflow, and power to determine the magnitude of the credit based on climate conditions and unit sizing relative to the loads. Typical cooling budget credits are approximately 20-30 percent, depending upon these factors.

The evaporative cooling system must meet the following requirements to receive credit based on the hourly performance method described above. Direct coolers, as well as indirect and indirect-direct coolers not meeting these criteria shall be modeled as a minimum efficiency (13.0 SEER) central air conditioner.

Eligibility and Installation Criteria:

1. The equipment manufacturer shall certify to the Commission that water use does not exceed 7.5 gallons per ton hour based on the Title 20 Appliance Efficiency Regulations testing criteria.
2. Equipment shall be permanently installed (no window or portable units).
3. Installation shall provide for automatic relief of supply air from the house with maximum air velocity through the relief dampers not exceeding 800 fpm (at the Title 20 rated airflow). Pressure relief dampers and ductwork shall be distributed to provide adequate airflow through all habitable rooms. For installations with an attic, ceiling dampers shall be installed to relieve air into the attic and then to outside through attic vents. For installations without an attic, sidewall relief dampers are acceptable.
4. To minimize water consumption, bleed systems are not allowed.
5. A water quality management system (either “pump down” or conductivity sensor) is required. “Pump down” systems can either be integral to the evaporative cooler or they can be accessories that operate on a timed interval. The time interval between pumps shall be set to a minimum of 6 hours of cooler operation. Longer intervals are encouraged if local water quality allows.
6. Automatic thermostats are required. Manual On/Off controls are not allowed.
7. If the evaporative cooler duct system is shared with a heating and/or cooling system, the installed duct system shall employ backdraft dampers at the evaporative cooler supply.
8. The installing contractor must provide a winter closure device that substantially blocks outdoor air from entering the indoor space.
9. The size of the water inlet connection at the evaporative cooler shall not exceed 3/8 inch.
10. Unless prohibited by local code, the sump overflow line shall not be directly connected to a drain and shall be terminated in a location that is normally visible to the building occupants.

Example 4-43

Question

How are applications with vapor compression cooling systems and evaporative cooling systems handled?

Answer

In situations where both evaporative cooling system(s) and vapor compression system(s) are installed in a house, the sizing of the evaporative cooler will dictate the magnitude of the credit. The performance approach will ensure that an evaporative cooler sized to meet most of the cooling loads will generate a higher credit than one sized to meet a fraction of the design cooling load.

Example 4-44

Question

How do you model multiple evaporative coolers on one house?

Answer

In situations with multiple evaporative coolers, effectiveness inputs should be averaged, and airflow and power inputs should be totaled. Performance characteristics of each piece of equipment should be individually listed on the compliance forms.

4.7.5 Ground-Source Heat Pumps

Table 4-19 – Standards for Ground Water-Source and Ground-Source Heat Pumps Manufactured on or after October 29, 2003

Source: Section 1605.3 Table C-8 of the 2012 California Appliance Efficiency Regulations

Appliance	Rating Condition	Minimum Standard
Ground water source heat pumps (cooling)	59º F entering water temperature	16.2 EER
Ground water source heat pumps (heating)	50º F entering water temperature	3.6 COP
Ground source heat pumps (cooling)	77º F entering brine temperature	13.4 EER
Ground source heat pumps (heating)	32º F entering brine temperature	3.1 COP

A geothermal or ground-source heat pump uses the earth as a source of energy for heating and as a heat sink for energy when cooling. Some systems pump water from an aquifer in the ground and return the water to the ground after exchanging heat with the water. A few systems use refrigerant directly in a loop of piping buried in the ground. Those heat pumps that either use a water loop or pump water from an aquifer have efficiency test methods that are accepted by the Energy Commission.

The mandatory efficiencies for ground water source heat pumps are specified in the California Appliance Efficiency Regulations, and repeated in Table 4–19. These efficiency values are certified to the Energy Commission by the manufacturer and are expressed in terms of Coefficient of Performance (COP) for heating and EER for cooling.

For the performance compliance approach, the COP must be converted to HSPF. To take appropriate credit the EER should be entered as a HERS verified EER,

which requires that a HERS rater verify the equipment efficiency. When this approach is used, a significant portion of the ground source heat pumps efficiency will not be accounted for. If credit is not taken, the EER may be used in place of the SEER. When heat pump equipment is not tested for HSPF, calculate the HSPF as follows:

Equation 4-9

HSPF = (3.2 x COP) - 2.4

The efficiency of geothermal heat pump systems is dependent on how well the portion of the system in the ground works. Manufacturers' recommendations must be followed carefully to ensure that the system is appropriately matched to the soil types and weather conditions. Local codes may require special installation practices for the ground-installed portions of the system. Verify that the system will meet local code conditions before choosing this type of system to meet the Standards.

4.7.6 Solar Space Heating

Solar space-heating systems are not recognized within either the prescriptive packages or the performance compliance method.

4.7.7 Wood Space Heating

The Energy Commission's exceptional method for wood heaters with any type of backup heating is available in areas where natural gas is not available. If the required eligibility criteria are met, a building with one or more wood heaters may be shown to comply with the Standards using either the prescriptive or performance approaches as described below.

A. Prescriptive Approach

The building envelope conservation measures of the Component Package must be installed. The overall heating system efficiency (wood stove plus back-up system) must comply with the prescriptive requirements.

B. Performance Approach

A computer method may be used for compliance when a home has wood space heat. There is no credit, however. Both the proposed design and the standard building are modeled with the same system, for example, with the overall heating system efficiency equivalent to a 78 percent AFUE central furnace with ducts in the attic insulated to Package A and with diagnostic duct testing.

Wood Heater Qualification Criteria

The Standards establish exceptional method guidelines for the use of wood heaters. If all of the criteria for the wood heat exceptional method are not met, a backup heating system must be included in the compliance calculations as the primary heat source.

The following eligibility criteria apply:

The building department having jurisdiction must determine that natural gas is not available.

Note: Liquefied petroleum gas, or propane, is not considered natural gas.

1. The local or regional air quality authority must determine that its authorization of this exceptional method is consistent with state and regional ambient air quality requirements pursuant to Sections 39000 to 42708 of the California Health and Safety Code.
2. The wood heater must be installed in a manner that meets the requirements of all applicable health and safety codes, including, but not limited to, the requirements for maintaining indoor air quality in the CMC, in particular those homes where vapor barriers are.
3. The wood heater must meet the EPA definition of a wood heater as defined in Title 40, Part 60, Subpart AAA of the Code of Federal Regulations (40CFR60 Subpart AAA) (see below).
4. The performance of the wood heater must be certified by a nationally recognized agency and approved by the building department having jurisdiction to meet the performance standards of the EPA.
5. The rated output of the wood heater must be at least 60 percent of the design heating load, using calculation methods and design conditions as specified in §150(h).
6. At the discretion of the local enforcement agency, a backup heating system may be required and be designed to provide all or part of the design heating load, using calculation methods and design conditions as specified in §150(h).
7. The wood heater must be located such that transfer of heat from the wood heater is effectively distributed throughout the entire residential unit, or it must be used in conjunction with a mechanical means of providing heat distribution throughout the dwelling.
8. Habitable rooms separated from the wood heater by one free opening of less than 15 ft^2 or two or more doors must be provided with a positive heat distribution system, such as a thermostatically controlled fan system. Habitable rooms do not include closets or bathrooms.
9. Wood heaters on a lower level are considered to heat rooms on the next level up, provided they are not separated by two or more doors.
10. The wood heater must be installed according to manufacturer and local enforcement agency specifications and must include instructions for homeowners that describe safe operation.
11. The local enforcement agency may require documentation that demonstrates that a particular wood heater meets any and all of these requirements.

40CFR60 Subpart AAA includes minimum criteria for wood heaters established by the US EPA. These criteria define a wood heater as an enclosed, wood-burning appliance capable of and intended for space heating or domestic water heating that meets all of the following criteria:

1. An air-to-fuel ratio averaging less than 35 to 1

2. A firebox volume less than 20 ft3.
3. A minimum burn rate less than 5 kilogram/hour (11.0 lbs/hr)
4. A maximum weight of less than 800 kilograms (1760 lbs)
5. The federal rules explicitly exclude furnaces, boilers, cook stoves, and open masonry fireplaces constructed on site, but include wood-heater inserts.

Example 4-45

Question

Are pellet stoves treated the same as wood stoves for the purposes of Standards compliance?

Answer

Yes.

Example 4-46

Question

If a wood stove is installed in a wall, does it have to meet the fireplace requirements of §150(e)?

Answer

No. A wood stove that meets EPA certification requirements does not have to meet any requirements applicable to fireplaces.

4.7.8 Gas Appliances

§110.5 Pilot Lights

As noted in an earlier section, pilot lights are prohibited in fan-type central furnaces. The Standards also prohibit pilot lights in cooking appliances, pool heaters, and spa heaters. However, one exception is provided for household cooking appliances without an electrical supply voltage connection and in which each pilot consumes less than 150 Btu/h.

For requirements related to installation of fireplaces, decorative gas appliances, and gas logs, see the Chapter 3 Building Envelope Requirements.

4.7.9 Evaporatively Cooled Condensers

Evaporatively Cooled Condenser Air conditioners are a type of air conditioning system that can provide significant space cooling savings especially in hot dry climates such as the central valley, interior south coast and desert area of California. The equipment minimal efficiencies are determined according to federal test procedures. Their efficiencies are reported in terms of Energy Efficiency Rating (EER).

The EER is the full load efficiency at specific operating conditions. In cooling climate zones of California, high EER units are more effective in saving energy than high SEER units. Using the performance compliance method, credit is

available for specifying evaporatively cooled air conditioner. When credit is taken for a high EER, field verification by a HERS rater is required.

If an evaporatively cooled air conditioner is installed, HERS verified measures must be installed including duct sealing, airflow and refrigerant charge or charge indicator display. Besides the HERS verification, there are additional special requirement for evaporatively cooled condensing air conditioners. Among these are the following requirements, that the manufacturer provide certification that water use is limited to no more than 0.15 gallon per minute per ton of capacity and that the supply line be no larger than ¼ inch in diameter. For a listing of all the requirements for evaporatively cooled condensing air conditioners see the CF2R compliance form.

4.7.10 Ice Storage Air Conditioners

Ice storage air conditioners use a conventional split system air conditioner where the outdoor coil is installed in a large storage tank. The system uses a special operating schedule which runs the compressor during the cooler night hours. During this period the system turns the water in the storage tank into ice. As the day warms up and the house needs cooling, the compressor is shut off and the system uses the ice in the storage tank as the source of cooling.

The only way to claim compliance credit for installing an ice storage air conditioner is to use the performance compliance method.

If an ice storage air conditioner is installed, HERS verified measures must be installed including duct sealing, airflow and refrigerant charge or charge indicator lights.

4.7.11 Non-Ducted Systems

Several manufacturers currently offer equipment that does not use air distribution ducts to heat or cool spaces. These systems use either refrigerant or water that has been heated and/or cooled to condition the space. Besides not using duct work these systems have advanced controls and full range multi-speed compressors that will allow for optimal performance through a wide range of conditioning loads without losing efficiency.

Currently these systems must be modeled as though they were minimal efficient units. The Energy Commission expects that the manufacturers will apply for a compliance option in the near future which will allow for the development of appropriate modeling rules to be included in the performance calculation approach.

As with all other high performance system, the Energy Commission recommend that all associated HERS verified measure be conducted to assure that all of the efficiency of this equipment is captured.

4.7.12 Ventilation Cooling

Ventilation cooling is differentiated from fresh air ventilation in that the primary focus is not to provide a minimum amount of air to meet ventilation requirements,

but to utilize higher volumes of outdoor air to cool the indoor space in lieu of air conditioning.

The simplest form of ventilation cooling utilizes windows to promote the flow of cooler air from outside to inside.

Whole house fans incorporate a fan (typically located in the attic) to pull cooler outdoor air through open windows, up into the attic, exhausting the air to outside through attic vents. By pulling cooler outdoor air through the house, indoor air temperatures and the temperature of building mass is reduced, offsetting next day cooling loads. The effectiveness of night ventilation cooling is dependent upon the climate conditions and how much indoor temperature variation the occupant will tolerate.

Another type of ventilation cooling system is characterized as a central fan system, whereby the HVAC air handler is integrated with a damper, outdoor air duct and controls to provide automated outdoor air delivery when conditions are favorable.

Although any of these ventilation cooling approaches can be utilized whenever outdoor temperatures are lower than indoor temperatures, the primary benefit occurs during summer nights when cooler outdoor air can be used to efficiently reduce indoor air temperatures below the daytime air conditioner thermostat setpoint, offsetting or eliminating next day cooling loads. The key distinction between ventilation cooling and night ventilation cooling is that the latter approach involves cooling beyond the air conditioner setpoint and utilizing building mass as a thermal storage system. The effectiveness of night ventilation cooling is dependent upon the climate conditions, thermal envelope and how much indoor temperature variation the occupant will tolerate.

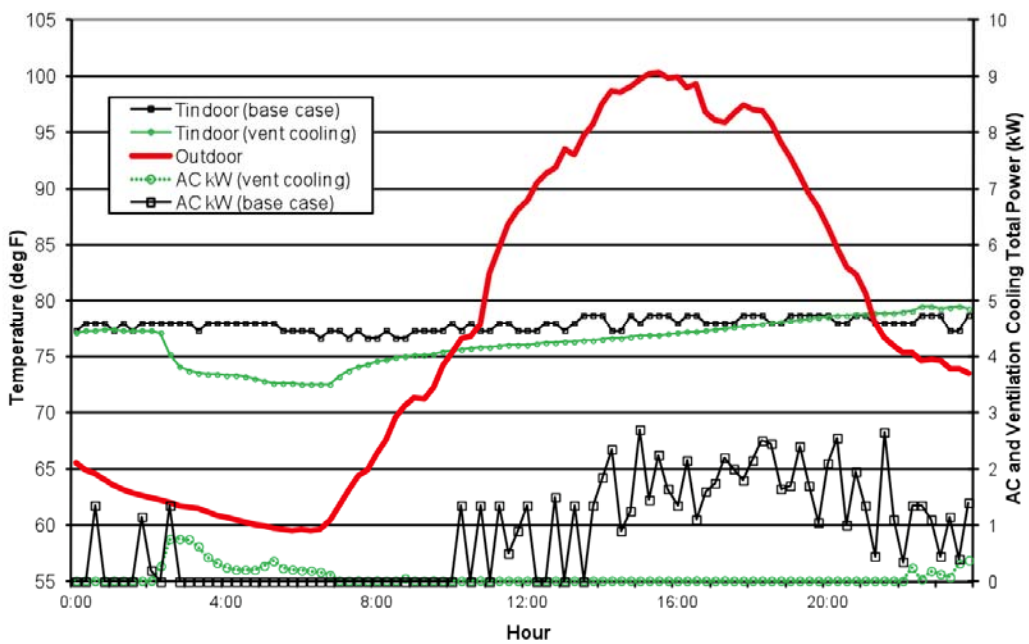

Figure 4–29 – Diurnal Temperature Variation and Ventilation Cooling

Figure 4–29, above, illustrates how ventilation cooling can offset air conditioning energy use with a relatively small amount of off peak fan energy.

Whole House Fans

Traditional whole house fans have a simple barometric damper (Figure 4–30) and a belt or direct drive motor driving a prop fan. Figure 4–31 shows the damper open with the fan immediately above. Figure 4–32 shows a similar product which moves less air, but provides an insulated damper with a better leakage seal between the attic and conditioned space. These units are generally designed to fit between standard rafter spacing, simplifying retrofit installations. Finally, Figure 4–33 shows remote whole house fan design which removes the fan further from indoor space, reducing the noise impact during operation.

Whole house fans operate most effectively at cooling a space when windows throughout the house are opened to a limited extent to insure fairly uniform airflow throughout the dwelling. This results in the greatest interaction of the cool air with the interior mass throughout the dwelling, providing the greatest amount of stored cooling. Running the fan all night long is most effective at fully “charging” the thermal mass. Noise can be mitigated to some extent through either use of a variable speed control, or installation of a multi-speed fan, allowing low speed nighttime operation. Security concerns and added dust and allergens are other factors to consider with the installation of a whole house fan,

The WHFs used to comply with the Standards must be listed in the Energy Commission’s Appliance Database which can be accessed at:

http://appliances.energy.ca.gov/QuickSearch.aspx

Figure 4–30 - Whole House Fan Damper

Figure 4–31 - Open Barometric Damper with Fan Above

Figure 4–32 - Insulated Whole House Fan with Damper Actuation

Figure 4–33 - Ducted Remote Whole House Fan

Central Fan Systems

Central fan ventilation cooling systems utilize the furnace or air handler fan to deliver outdoor air to conditioned space. By adding an automated damper, outside air duct, temperature sensors and controls, these systems can

automatically deliver filtered outdoor air to occupant-specified comfort levels when outdoor conditions warrant the use of ventilation. This automated operation represents an improvement over WHFs, which rely entirely on the occupant being available to initiate operation and open windows throughout the house. A disadvantage of the central fan systems is that they typically move less air and consume more energy per cfm due to the more restrictive duct systems.

Figure 4–34 and Figure 4–35 show the airflow paths when the systems operate in conventional return air mode (Figure 4–34) or in outdoor air mode (Figure 4–35). In Figure 4–34, the damper is positioned to direct return air to the air handler for normal heating and cooling operation. In Figure 4–35 (ventilation cooling mode), the damper position is reversed so that air entering the air handler is now pulled from the outside air duct, and then delivered to the house, with relief air exhausted through the damper to the attic. The air intake shown in Figure 4–34 and Figure 4–35 can either be a roof penetration inlet (example shown in Figure 4–36) or a gable end screen vent (as shown in Figure 4–37). A larger diameter duct sized to handle the full ventilation airflow runs from the air inlet to the damper box.

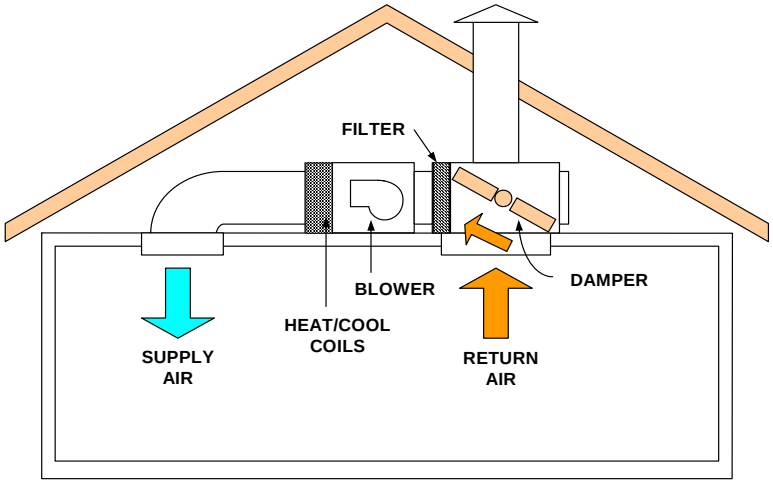

Figure 4–34 - Central Fan System (Return Air Mode)

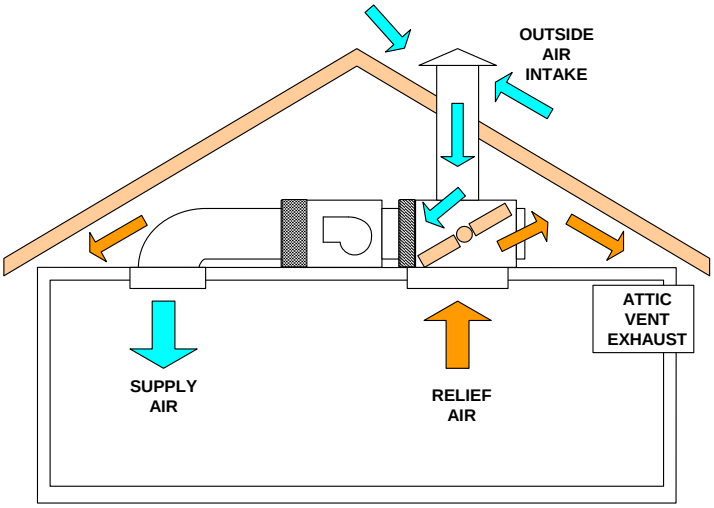

Figure 4–35 - Central Fan System (Outdoor Air Mode)

Figure 4–36 - Sample Rooftop Air Intake

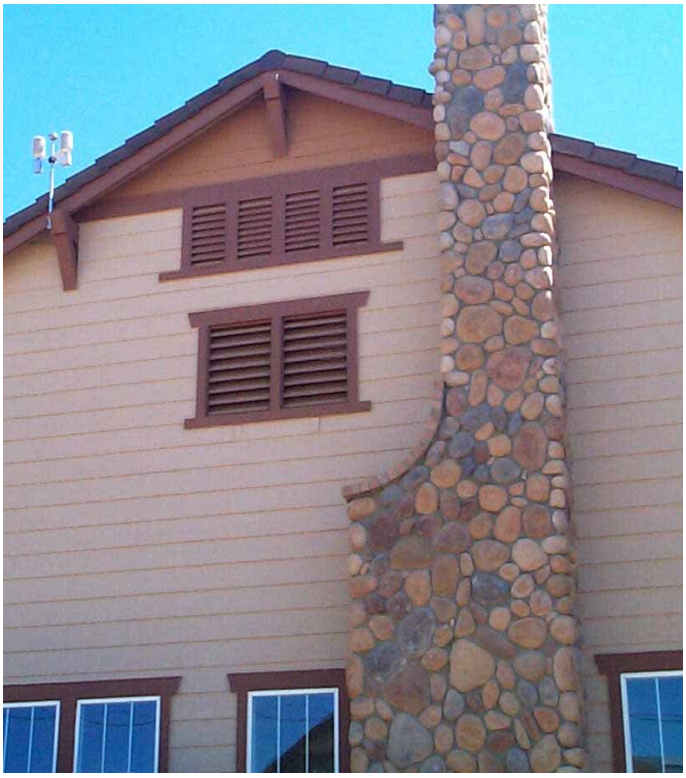

Figure 4–37 - Sample Gable End Air Intake (lower set of vents)

Several advantages for central fan systems include control integration with the central system thermostat, precise control of ventilation initiation and termination, filtered outdoor air, and increased home security (windows can remain shut). One of the systems currently available also utilizes a variable speed motor facilitating fan speed control in response to outdoor conditions and indoor comfort settings. This has been shown to provide energy savings relative to a fixed speed central fan ventilation system.

Prescriptive Requirements

Component Package A specifies a whole house fan as a prescriptive requirement for the standard building design in climate zones 8 through 14. The whole house fan, or central fan system, must meet the eligibility criteria specifed below to meet the prescriptive requirement.

Additions of 1,000 ft2 or less are exempt from the whole house fan prescriptive requirements.

Eligibility Criteria for <u>Whole House Fans</u>

§150.1(c)12

1. Must meet combustion air safety requirements related to indoor gas-fired appliances

2. Whole House Fans modeled for Title 24 credits must be listed in the CEC Appliance Database.

3. To meet the prescriptive requirement, the installed Whole House Fan(s) must have a listed airflow of at least 2 cfm/ft2 of house conditioned floor area.

4. The house must have a minimum attic net free vent area to outdoors of one square foot per 375 cfm of installed Whole House Fan(s) rated airflow. See Tables 4-20 and 4-21 below for net free ventilation area based on the square footage of the house.

5. Homeowners who have WHFs installed must be provided with a one page "How to operate your whole house fan" informational sheet.

Eligibility Criteria for <u>Central Fan Systems</u>

1. Central fan night ventilation systems will be required to meet Title 24 duct leakage requirements (with system operating in return air mode).

2. Central fan night ventilation systems will be required to meet the fan Watt draw requirement that involve HERS verification of airflow and fan power, demonstrating an efficacy of no more than 0.58 Watts/cfm.

3. In addition to sensing temperature at the thermostat, central fan system shall have an outdoor temperature sensor (used to initiate and terminate night ventilation operation) and a temperature sensor sensing the air temperature entering the air handling unit (used for damper position verification).

4. Central fan systems will be treated as "fixed speed" systems, unless the manufacturer can provide documentation to the California Energy Commission that the product demonstrates the criteria listed below. The Commission will review the submittal and make a determination that the system adequately meets the qualifying criteria.
    a. The installed fan motor is a variable speed motor
    b. The motor is controlled in night ventilation mode to vary in a continuous range between full air flow (100%) and a minimum airflow of no more than 25% of full airflow.
    c. The manufacturer will provide written documentation on how their control strategy is implemented, how night ventilation fan speed is controlled, and how ventilation cooling rates are determined. The ventilation cooling rate calculation will occur at a time interval of 24 hours or less, to insure that the system responds in a timely manner to changes in weather patterns.

Table 4-20 shows example conversions for the calculated Net Free Vent Area (NFVA) for a range of CEC listed whole house fan airflow levels. Instead of using the table, one can calculate the NFVA by dividing the listed cfm by 375.

Table 4-20 – Sample NFVA Calculation

CEC Listed Airflow (cfm)	Minimum Attic NFVA (ft^2)
1000	2.7
2000	5.3
3000	8.0
4000	10.7
5000	13.3
6000	16.0
7000	18.7

Since attic vents present some level of airflow restriction, use the appropriate screen and louver reduction factor from Table 4-21.

Table 4-21 - Attic Vent Airflow Reduction Factors

Vent Type	Reduction Factor
¼" screen (hardware cloth)	0.90
¼" screen with metal louvers	0.75
¼" screen with wood louvers	0.25
Insect screen (mesh under ¼")	0.50
Insect screen with metal louvers	0.50
¼" screen with wood louvers	0.25

Required vent area = Minimum Attic NFVA (Table -20) ÷ Reduction Factor

Example:

A 3,000 cfm fan is selected from the Energy Commission Appliance Database. The builder is planning to use vents with "¼" screen with metal louvers".

The minimum required vent area is = 8.0 ÷ 0.90 = 8.9 ft^2

Example 4-47 – Ventilation Cooling

Question

I am building a 2,350 ft2 house in Climate Zone 8. Do I need to install a whole house fan or central fan ventilation system?

Answer

No. Whole house fans (or eligible central fan systems) are a prescriptive requirement in climate zones 8-14, meaning that they are not a mandatory measure, although they do define the prescriptive compliance level. If you decide to install a whole house fan to meet the prescriptive requirement, you should select a fan from the CEC Appliance Database. The prescriptive requirement specifies a minimum airflow of 2 cfm/ft2 (4,700 cfm for the proposed house) and 1 ft2 of attic net free ventilation area per 375 cfm of airflow (12.5 ft2 for a 4,700 cfm fan).

Example 4-48

Question

Why do I need to provide attic ventilation area for a whole house fan?

Answer

Whole house fans move a lot of air, all of which is exhausted to the attic. Without sufficient attic relief to outdoors, the air velocity will increase (potentially disturbing blown insulation), and the fan will move less air.

Example 4-49

Question

What are the advantages and disadvantages of whole house fans relative to central fan ventilation cooling systems?

Answer

Whole house fans are relatively inexpensive; both in first cost and operating cost, and are highly effective if used properly in the right climate. They move much more air than central fan systems which must deliver air through the existing duct system. Whole house fans can be noisy, require user operation to open windows, turn on and off, bring dust and allergens in from outside, and potentially reduce home security if operated throughout the night. Central fan systems are more expensive and generally move less air, but provide totally automated operation, independent of whether the occupant is home or not. Windows can remain shut and all outdoor air is filtered. Some central fan systems may also be configured to provide fresh air ventilation consistent with the mechanical ventilation requirements (Section 4.6). Review product literature to determine if available products meet the CEC fresh air ventilation requirements.

Example 4-50

Question

A two story home with a 2,500 sf of conditioned space and having an attic of 1,500 sf is located in climate zone 10. Are whole house fans required? Does this impact the number of vents in the attic?

Answer

Section 150.1(c)12 requires whole house fans (WHF) in single family houses that are located in climate zones 8-14. These are climate zones which have summer cooling needs but where the home can be efficiently cooled on cool summer evenings by the use of a whole house fan. Section 150.1(c)12 also requires that these fans be sized so they provide at least 2 cubic feet per minute (cfm) of flow for each square foot of conditioned space in the house. The fans used must be listed in the Energy Commission's Appliance Database (http://appliances.energy.ca.gov/QuickSearch.aspx) and the rated cfm listed on the CF2R-Mech 02 form. In addition, the attic must have at least one sf of attic vent free area for each 375 cfm of whole house fan rated flow.

Thus for this house with 2,500 sf of conditioned floor area, the minimum total flow rate of whole house fans installed in the house must be at least:

Min WHF flow rate = Conditioned Floor Area x 2 CFM/sf = 2,500 sf x 2 cfm/sf = 5,000 cfm.

In this case the builder has selected two 3,000 cfm whole house fans. The minimum amount of vent net free area in the attic is calculated as follows:

Net Free Area = Total WHF cfm / (375 cfm/sf NFA) = (3,000 + 3,000) / 375 = 16 sf

Example 4-51

Question

For the above house what impact does this added vent area have on "solar ready" roof area?

Answer

Section R806 "Roof Ventilation" of the California Residential Code describes the requirements of roof ventilation for protection of attic components from moisture. For ventilated attics the default minimum net free area is 1 square foot for each 150 square feet of the roof. However one can reduce the net free area of attic vents to 1 square foot per 300 square feet of attic area by using either of the following two methods:

1. Install between 50% and 80% of the total net free area in ventilators that are at least 3 feet (914 mm) above the eave or cornice vents with the balance of the required ventilation provided by eave or cornice vents; or
2. A Class I or II vapor barrier is installed on the warm-in-winter side of the ceiling.

In this example the attic has a total area of 1,500 sf. If the default 1/150 sf of vents are installed, the total vent area is:

Total Vent Free Area = Attic area / 150= 1,500 / 150= 10 sf.

If the smaller vent area was desired by use either of the two methods described above, a ratio of 1 sf of vent net free area would be required per 300 sf of attic area. Thus the total vent net free area would be:

Total Vent Free Area = Attic area / 300= 1,500 / 300= 5 sf.

However with the required whole house fan ventilation rate, there is little motivation to use either of the two methods of reducing vent net free area as the whole house fan will require 16 sf of vent area, more than either method of calculating vent area.

The amount of vent area does not have to impact the "solar ready" roof area facing south. The vents can be either located on the north side of the roof or for gable roofs, the least expensive method is to install gable end vents.

4.8 Compliance and Enforcement

The purpose of this section is to describe compliance documentation and field verification requirements related to heating and cooling systems.

4.8.1 Design-Phase Documentation

The initial compliance documentation consists of the Certificate of Compliance (CF1R). It lists the features that the house needs for it to comply to the prescriptive or performance requirements, depending on the compliance path taken.

Mandatory features as required by section 150.0, are not documented on any required compliance forms. They are however listed in a Mandatory Features Checklist provided in Appendix A that enforcement personnel can use as a compliance too if they choose to.

For the prescriptive compliance approach, the required features are based on Prescriptive Component Package A, shown in Table 150.1-A.

For the performance compliance approach, the require features are based on a set of features that the designer has documented to result in a level of efficiency at least as good as Prescriptive Component Package A. The calculations for documenting this are done using the approved performance software, algorithm of which is detailed in the Alternative Calculation Method (ACM) Manual.

The performance approach provides maximum design flexibility. It also allows the compliance credit for special, additional features to be quantified.

For newly constructed buildings and additions, the Mandatory Features Checklist is required to be included on the plans and specifications submitted to the enforcement agency.

The CF1R has a section where special modeling features are listed. These are features for which special compliance credit was taken using the performance approach. They required additional visual verification by the enforcement agency to ensure proper installation. Some require field verification and diagnostic testing by a HERS rater. These will be listed in a separate section.

The following are heating and cooling system features that will be listed in this section if they exist in the proposed design:

Special Features Not Requiring HERS Rater Verification:

1. Ducts in a basement
2. Ducts in a crawlspace
3. Ducts in an attic with a radiant barrier
4. Hydronic heating and system design details
5. Gas-fired absorption cooling
6. Zonal control
7. Ductless wall heaters

Special Features Requiring HERS Rater Verification:

1. Duct sealing

2. Verified duct design – for reduced duct surface area and ducts in conditioned space
3. Low leakage ducts in conditioned space
4. Low leakage air handlers
5. Verification of Return Duct Design
6. Verification of Air Filter Device Design
7. Verification of Bypass Duct Prohibition
8. Refrigerant charge
9. Installation of a Charge Indicator Display (CID)
10. Verified system airflow
11. Air handler fan watt draw
12. High energy efficiency ratio (EER)
13. Verified Seasonal Energy Efficiency Ratio (SEER)
14. Maximum Rated Total Cooling Capacity
15. Evaporatively cooled condensers
16. Ice storage air conditioners
17. Continuous Whole-Building Mechanical Ventilation Airflow
18. Intermittent Whole-Building Mechanical Ventilation Airflow
19. High Quality Insulation Installation QII

Information summarizing measures requiring field verification and diagnostic testing is presented in Table RA2-1 of the Reference Residential Appendix RA2. The field verification and diagnostic testing protocols that must be followed to qualify for compliance credit are described in RA3 of the Reference Residential Appendix.

Registration of the CF1R with an approved HERS provider is required. The building owner, or the person responsible for the design must submit the CF1R to the HERS provider Data registry for retention following the procedures described in Chapter 2 and in RA2 of the Reference Residential Appendix. Registration ensures that the project follows the appropriate verification process, provides tracking and provides instant access to the most current documentation.

4.8.2 Construction-Phase Documentation

During the construction process, the general contractor and/or specialty subcontractors must complete the applicable sections of an Installation Certificate (CF2R) for any building design special features specified on the certificate of compliance. A list of CF2R sections that apply to the HVAC special feature requirements follows:

A. HVAC Systems
B. Duct Leakage Diagnostics
C. Refrigerant Charge Verification.

D. Duct Design Verification for the Location and Area Reduction compliance measures. The duct design specifications and layout must be included on the building plans submitted to the enforcement agency, and a copy of the duct design layout must be posted or made available with the building permit(s) issued for the building, and must be made available to the enforcement agency, installing contractor, and HERS rater for use during the installation work and for all applicable inspections.

E. Fan Efficacy Verification

F. System Airflow Verification.

G. High SEER/EER Verification.

H. Whole-Building Ventilation for Indoor Air Quality (IAQ), Local Ventilation Exhaust, and other IAQ measures given in ASHRAE Standard 62.2

Like the CF1R, registration of the CF2R is required. The licensed person responsible for the installation must submit the CF2R information that applies to the installation to a HERS provider Data registry using procedures described in Chapter 2 and in RA2 of the Reference Residential Appendix.

4.8.3 Field Verification and/or Diagnostic Testing

For buildings for which the Certificate of Compliance (CF1R) requires HERS field verification for compliance with the Standards, a HERS rater must visit the site to perform field verification and diagnostic testing, to complete the applicable heating and cooling system Certificates of Field Verification and Diagnostic Testing (CF3R). The following measures require field verification and diagnostic testing if they are used in the proposed design for compliance, and are listed on the CF1R as special Features Requiring HERS Rater Verification:

A. Verified duct leakage.

Note: Outside air (OA) ducts for Central Fan Integrated (CFI) ventilation systems, shall not be sealed/taped off during duct leakage testing. CFI OA ducts that utilize controlled motorized dampers, that open only when OA ventilation is required to meet ASHRAE Standard 62.2, and close when OA ventilation is not required, may be configured to the closed position during duct leakage testing.

A. Verified Duct Design - supply duct location, surface area, and R-value (including buried ducts).

B. Low leakage ducts in conditioned space.

C. Low leakage air handlers.

D. Refrigerant charge verification

E. Verification of installation of a Charge Indicator Display (CID)

F. Forced air system airflow verification utilizing the installer-provided hole for the placement of a Hole for a Static Pressure Probe (HSPP), or a Permanently installed Static Pressure Probe (PSPP).

G. Air handler fan watt draw.

H. High efficiency air conditioner energy efficiency ratio (EER).

I. Evaporatively cooled condensers.

J. Ice storage air conditioners

K. Photovoltaic (PV) field Verification. To receive PV rebates for photovoltaic installations pursuant to the New Solar Home Partnership, the output of the installed system must be measured and shown to comply with the output specified on the rebate application (taking into account variables such as the solar insolation, the time, and the temperature)

L. Central fan integrated systems for ventilation cooling for air handler fan watt draw.

M. Whole-Building Ventilation for Indoor Air Quality (IAQ), Local Ventilation Exhaust, and other IAQ measures given in ASHRAE Standard 62.2

Field verification is for non-mandatory features is only necessary when performance credit is taken for the measure. For example, maximum cooling capacity need only be HERS verified if maximum cooling capacity was used to achieve credit in the proposed design. Some field verification is for mandatory measures and will occur in all homes, unless they are exempt from the measure.

Like the CF1R and CF2R, registration of the CF3R is required. The HERS rater must submit the field verification and diagnostic testing information to the HERS provider data registry as described in Chapter 2. For additional detail describing HERS verification and the registration procedure, refer to RA2 of the Reference Residential Appendix.

4.9 Refrigerant Charge

4.9.1 Refrigerant Charge Verification

This section provides a summary of the procedures for verifying refrigerant charge for air conditioning systems. RA3.2 of the Reference Residential Appendix describes the procedures in detail. Refrigeration technicians and HERS raters who do the testing should refer to these and other technical documents. This section is intended to provide an overview and explanation of these procedures.

A. Overview

A split system air conditioner undergoes its final assembly at the time of installation. This installation must be verified to ensure proper performance. Important factors that affect performance include the amount of refrigerant in the system (the charge) and the proper functioning of the metering device. Air conditioner energy efficiency suffers if the refrigerant charge is either too low or too high and if the metering device (TXV or EXV) is not functioning properly. In addition to a loss of efficiency and capacity, errors in these areas can lead to premature compressor failure.

To help avoid these problems, the prescriptive standards require that systems be correctly installed. The prescriptive standards also require that they be field verified in Climate Zones 2, and 8 through 15. Refrigerant charge verification is also required in any Climate Zone when chosen as a compliance feature using the performance approach.

The requirement to verify the refrigerant charge after installation does not

apply to new packaged systems where the manufacturer certifies the charge performed in the factory, however airflow and other requirements must still be verified. The prescriptive standards regarding verification of refrigerant charge do apply to altered package systems in Climate Zones 2 and 8 through 15.

This section describes the measurements and tests required to verify proper refrigerant charge and to verify that the system's refrigerant metering device is working as designed. An alternative to the testing requirement is the installation of a charge indicator display that continuously monitors the function of the unit.

The verification of proper refrigerant charge must occur after the HVAC contractor has installed and charged the system in accordance with the manufacturer's specifications. The procedure requires properly calibrated digital refrigerant gauges, thermocouples, and digital thermometers. When multiple systems in the same home require testing, each must be tested individually.

In a typical residential cooling system, there are two important performance criteria that can be checked relatively easy to verify that there is neither too much or too little refrigerant in the system. In systems with a fixed orifice device in the evaporator coil the number to check is called its superheat. In a system with a variable metering device, the number to check is called its subcooling.

Superheat refers to the number of degrees the refrigerant is raised after it evaporates into a gas. This occurs inside the evaporator coil (aka, indoor coil). The correct superheat for a system will vary depending on certain operating conditions. The target superheat for a system must be obtained from a table provided in the RA3.2 protocols or the manufacturer's superheat table. There is an allowed range of several degrees between the measured superheat and the target superheat for a system to pass.

Subcooling refers to the number of degrees the refrigerant is lowered after it condenses into a liquid. This occurs inside the condenser coil (aka, outdoor coil). The manufacturer specifies the correct subcooling for a system. It may vary depending on operating conditions. Like superheat, there is an allowed range of several degrees between the measured subcooling and the target subcooling for a system to pass.

The temperature at which a refrigerant condenses or evaporates is called its saturation temperature. Above its saturation temperature, a refrigerant is always a gas. Below its saturation temperature, a refrigerant is always a liquid.

Saturation is when a refrigerant exists as both a liquid and a gas. It always occurs at the same temperature depending on what the pressure of the refrigerant happens to be. At higher pressures, the saturation temperature goes up and visa-versa. This convenient property is what makes refrigeration work.

The saturation temperature can be determined by simply measuring the pressure of a refrigerant and referring to a table, known as a pressure-temperature (PT) table, for that specific refrigerant. Saturation temperatures are well documented for all common refrigerants.

Because variable refrigerant metering devices are prone to failure and even

more so to improper installation, it is important that their operation be checked. The purpose of a metering device is to maintain a relatively constant superheat over a wide range of operating conditions, therefore checking the superheat, in addition to the other tests performed, will indicate if the metering device is operating correctly.

Unfortunately, checking superheat and subcooling can only be done under certain indoor and outdoor conditions. This verification procedure, called the Standard Charge Verification Method, is very weather dependent.

There is another way to verify proper refrigerant charge that is not weather dependent and that is by weighing the refrigerant. Called the Weigh-in Charge Verification Method, this approach can only be performed by the installer. It can be verified by the HERS rater either by simultaneous observation or by using the Standard Method when conditions permit.

B. Minimum System Airflow Verification for Refrigerant Charge Verification

To have a valid charge test, the system airflow must be verified to be at least 300 cfm/ton for altered systems and 350 cfm/ton for new systems. The procedures for measuring total system airflow are found in RA3.3 . They include plenum pressure matching using a fan flow meter, a flow grid, a powered flow hood and the traditional (non-powered flow hood). The airflow verification procedures for refrigerant charge verification no longer include the temperature split method.

If a system does not meet the minimum airflow requirements, remedial steps may be required to increase the system airflow. More airflow is generally better for systems with air conditioning. Not only does this allow proper refrigerant charge to be verified, but it also improves the overall performance of the system. When able to be performed on a system, regardless of the refrigerant charge verification procedure, minimum system airflow must always be verified. Note that section 150.2(b)1F states that systems must be installed with “all applicable procedures”. This includes the minimum system airflow requirements.

In some cases, improving airflow may be cost prohibitive and there is a process for documenting this (RA3.2.2.7.3). When this option is used, verification by sample groups is not allowed.

Minimum airflow is critical to proper air conditioner operation. Reducing airflow reduces cooling capacity and efficiency. Many systems in California have oversized equipment and undersized ducts. In newly installed duct systems the minimum airflow requirement is higher because the opportunity is there to design and install a better system. In altered systems, the installer may be required to modify the ducts system to meet the minimum. It should be noted that the minimums of 300 and 350 cfm/ton are far lower than the desired airflow for most systems, which is usually 400 cfm/ton and up.

C. Standard Charge Verification Procedure (RA3.2.2)

The first step is to turn on the air conditioning system and let it run for at least 15 minutes in order to stabilize temperatures and pressures. While the system is stabilizing, the HERS rater or the installer may attach the instruments

needed to take the measurements.

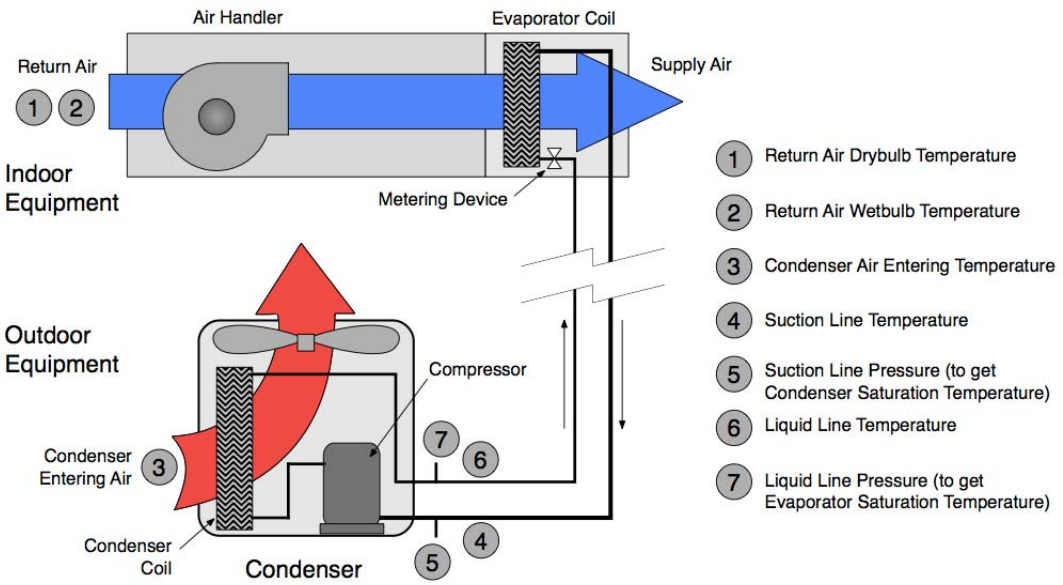

Figure 4-38 – Measurements for Refrigerant Charge and Airflow Tests

The following measurements shall be taken by the technician or HERS rater when applicable.

1. The return air wet bulb and dry bulb temperatures are measured in the return plenum before the blower at the location labeled "Title 24 – Return Plenum Measurement Access Hole". This hole must be provided (see point 2 in Figure 4-38). See figure RA 3.2-1 for more information on the placement of the measurement access hole (MAH).
2. Additionally, the outdoor air dry bulb temperature is measured at the point where the air enters the outdoor condensing coil (see point 4 in Figure 4-38). It is important that this outdoor temperature sensor be shaded from direct sun during the verification procedure.

In addition to the air temperature measurements, four refrigerant properties need to be measured. Two of these measurements are taken near the suction line service valve before the line enters the outdoor unit) and are used to check the superheat.

1. The first measurement is the temperature of the refrigerant in the suction line, which is taken by a clamp-on thermocouple or other suitable device insulated from the outdoor air. (see point 5 in Figure 4-38)
2. The second measurement determines the saturation temperature of the refrigerant in the evaporator coil. (see point 6 in Figure 4-38).The saturation temperature can be determined from the low-side (suction line) pressure and a saturation temperature table for the applicable refrigerant.

To check the subcooling, two more refrigerant properties are required, and may be measured near the liquid line service valve at the point where the line

exits the outdoor unit (see points 7 and 8 in Figure 4-38):

1. The liquid refrigerant temperature in the liquid line is measured by a clamp-on thermocouple insulated from the outdoor air.
2. The condenser saturation temperature can be determined from the liquid line pressure and a saturation temperature table for the applicable refrigerant.

Note: determination of the condenser saturation temperature and the liquid line temperature is used only for the subcooling verification method on systems with TXV or EXV metering devices.

Superheat Charge Verification Method (RA3.2.2.6.1)

The *Superheat Charge Verification Method* is used on units with a fixed refrigerant metering device (not a TXV or EXV).

Airflow verification must be confirmed prior to starting the *Superheat Verification Method*.

Table 4-22 – Structure of Target Superheat

		Return Air Wet-Bulb Temperature (ºF) (T Return, wb)									
		50	51	52	53	54	55	..	..	75	76
Condenser Air Dry-Bulb Temperature (ºF) (T condenser, db)	55	Target Superheat = (Suction Line Temperature minus Evaporator Saturation Temperature) – See Reference Residential Appendix Table RA3.2-2									
	56										
	57										
	..										
	..										
	93										
	94										
	95										

The *Superheat Verification Method* involves comparing the actual (measured) superheat temperature to a target value from a table. The actual superheat temperature is the measured suction line temperature ($T_{Suction, db}$) minus the evaporator saturation temperature ($T_{Evaporator, Saturation}$). The target superheat value is read from a table (Table RA3.2-2 of the Reference Residential Appendix or the manufacturer's superheat table).

For illustration purposes, the structure of Table RA3.2-2 is shown above as Table 4-23.

Only an EPA-certified technician may add or remove refrigerant. **Under no circumstances may a HERS rater add or remove refrigerant on systems that they are verifying.**

1 Subcooling Verification Method (RA3.2.2.6.2)

The *Subcooling Verification Method* is used on units with a variable refrigerant metering device (a TXV or EXV).

Airflow verification must be confirmed prior to starting the *Subcooling Verification Method*.

The *Subcooling Verification Method* involves comparing the actual subcooling temperature to the target value supplied by the manufacturer. The actual subcooling is the condenser saturation temperature ($T_{Condenser, Saturation}$) minus the liquid line temperature (T_{Liquid}).

D. Weigh-in Charging Procedure

The weigh-in charging procedure involves charging the system by determining the appropriate weight of refrigerant based on the size of the equipment and refrigerant lines rather than by actual performance of the system. Systems utilizing the weigh-in procedure by the installer for any reason may not be third party verified by using sample groups.

The weigh-in procedure does not relieve the installer from having to ensure proper airflow.

There are two installer options for the weigh-in procedure. One involves the adjustment to the amount of refrigerant in a system by adding or removing a fraction of the refrigerant as specified by the manufacturer (weigh-in charge adjustment). The other involves evacuating the entire system and recharging it with the correct total amount of refrigerant, by weight (weigh-in total charge).

The weigh-in charge adjustment procedure may only be used when a new factory-charged outdoor unit is being installed and the manufacturer provides adjustment specifications based on evaporator coil size and refrigerant line size and length.

The weigh-in total charge may be used for any weigh-in procedure but still requires manufacturer's adjustment specifications. Only the installer/technician may perform any kind of weigh-in procedure.

E. Equipment Limitations

The Standards only specifically require verification of refrigerant charge for *air cooled* air conditioners and *air source* heat pumps. All other types of systems are not expressly exempt from the refrigerant charge requirements. Certain portions of the requirements may still apply, such as the minimum system airflow requirement. The installer would have to verify with the manufacturer and confirm with the CEC. The installer must adhere strictly to the manufacturer's specifications.

Variable refrigerant flow systems and systems such as mini-splits that cannot be verified using the standard approach must demonstrate compliance using the weigh-in method. Verification by the HERS rater can only be accomplished by simultaneous observation of the installer's weigh-in process.

F. HERS Rater Verification Procedures

When required by the Certificate of Compliance, HERS raters will perform

third party field verification and diagnostic testing of refrigerant charge. This may include the standard method, simultaneous observation of the weigh-in method, verification of minimum system airflow, and verification of installation of the measurement access hole.

The verification procedures are essentially identical for the rater and the installer except that the tolerances for passing the superheat and subcooling tests are less stringent for the rater's test. This is to allow for some variations is measurements due to instrumentation or test conditions (e.g., weather).

The following conditions prohibit verification using sample groups:

1. Weigh-in method
2. When the minimum airflow cannot be met despite reasonable remediation attempts. (See RA3.2.2.7.3)

As always, to be eligible for sampling, the system must first be verified and passed by the installer. If sampling is not being used, the rater will perform the verification process only after the installer has charged the system according to manufacturer's specifications.

G. Winter Setup Procedures

Reference Appendix RA1 provides for the approval of special case refrigerant charge verification procedures when the equipment is specifically approved by the manufacturer for such procedures. One such procedure is found in RA1.2. It provides for a modification to the standard charge procedure when conditions make the standard charge method difficult.

The Standard Charge Verification Procedure (Section RA3.2.2 of the Reference Residential Appendices) calls for the outdoor temperature to be within the manufacturer's specified range. When outdoor temperatures are below 70°F, the setup for the Standard Charge Verification Procedure must be modified in order to achieve the proper system pressure differential needed for the procedure. (Note: the Standard Charge Verification procedure is generally allowed to be used down to 55°F without the Winter Setup; however, the 70°F requirement mentioned here is typical of most manufacturers' requirements for the Winter Setup). The Winter Setup for the Standard Charge Verification Procedure (Winter Charge Setup) allows both installers and HERS Raters to utilize the Standard Charge Verification Procedure of RA3.2.2 in the winter. Note that the Weigh-in Charging Procedure specified in Section RA3.2.3 may also be used, but only by the installer.

The Winter Charge Setup creates the right conditions at the unit being tested for outdoor temperatures above 37°F and below 71°F that allow the system to operate in the same range of pressure differences between the low side pressure and the high side pressure as occurs during warm outdoor temperatures.

The Winter Charge Setup is used only for units equipped with variable metering devices, which include Thermostatic Expansion Valves (TXV) and Electronic Expansion Valves (EXV) for which the manufacturer specifies subcooling as the means for determining the proper charge for the unit, including units equipped with micro-channel heat exchangers. The Winter Charge Setup achieves an appropriate high side - low side pressure differential to conduct the Standard Charge Verification Procedure, by

restricting the airflow at the condenser fan outlet through the use of a Condenser Outlet Air Restrictor. Once this pressure differential is achieved, the Variable Metering Device Calculations are conducted in the same way as the variable metering device procedures described in Reference Residential Appendix RA 3.2.2.6.2. All other applicable requirements of Section RA3.2.2 remain the same and must also be completed when using the Winter Charge Setup,

Though not specifically mentioned in the CID protocols of Residential Appendix RA3.4.2, the Winter Set Up Method detailed in RA 1.2 may be used when normally allowed. For purposes of CID verification the Winter Setup Method will be treated the same as the Subcooling Method.

Utilizing Weigh-in Charging Procedure at Low Outdoor Temperatures – When a new HVAC system in installed, for enforcement agencies to issue an occupancy permit, the HVAC installer must check the refrigerant charge and a HERS rater must verify the correct charge; however, EXCEPTION to Section 150.1(c)7A provides for an alternative third party HERS verification if the weigh-in method is used when the outdoor temperatures are less than 55 degrees F.

Typically, when the weigh-in method used by the installing contractor to ensure proper refrigerant charge, a HERS rater must perform a charge verification in accordance to the procedures outlined in the Reference Residential Appendix RA3.2, which is the standard charge procedure described above in this chapter. However, since the standards charge verification procedures (RA3.2) cannot be performed when the outdoor temperatures are less than 55 degrees, the standards provide the installer with two choices:

1. Utilize the "HERS Rater - Observation of Weigh-In Charging Procedure" as prescribed in Reference Residential Appendix RA3.2.3.2, to demonstrate compliance, AND install an **Occupant Controlled Smart Thermostat (OCST),** or

2. Wait for warmer temperatures and perform the standard charge verification procedure, which can delay the project.

As noted above, when the HVAC installer elects this procedure for verification (RA3.2.3.2), the system thermostat must be an **Occupant Controlled Smart Thermostat (OCST)** which conforms to the requirements of Reference Joint Appendix JA5.

5. Water Heating Requirements

5.1 Overview

5.1.1 Water Heating Energy

Water heating energy use is an important end use in low-rise residential buildings. Roughly 90 percent of California households use natural gas fueled water heaters, typically atmospheric gas storage units with tank volumes of 40 to 50 gallons. Roughly 6% of households use electricity to heat water and a few percent use propane (liquefied petroleum gas, or LPG). Standby loss associated with the center flue design represents about 25-35% of a typical gas storage water heater system's annual energy use.

The electricity generation system is comprised of a variety of generation plants including fossil fueled (natural gas and coal), nuclear, hydroelectric, solar, and wind. Approximately two-thirds of the source energy used to produce the electricity is lost in the generation, transmission, and distribution processes. Historically this has played into Title 24's decision to base the water heating budget on the more "source energy" efficient gas water heating system. The Standards require water heating systems to account for hourly usage impacts of the overall efficiency of each fuel type in the form of Time Dependent Valuation (TDV). Natural gas fired system are used as the reference TDV for water heating, except where natural gas is not available which in those cases, in which cases propane is the reference case. Since electric TDV is much higher (per unit of energy content) than gas, electric resistance water heating is essentially precluded unless it is used in conjunction with an adequately sized solar water heating system. One electrical option which can comply with the standards is heat pump water heaters.

Figure 5-1 below shows the energy flows that constitute water heating energy usage. On the right hand side, hot water draws at the end use points represents the useful energy consumed. Hot water that is actually used typically represents the largest fraction of water heating energy use, although in situations with very small draws, standby losses from the typical gas storage water heater can exceed the end use. Distribution system associated energy impacts vary widely based on the type of system, quality of installation, house design, and hot water use patterns. Typical single family water heating system distribution losses may amount to up to 30 percent of energy consumed, while compact single family distribution systems may be less than 10 percent. Multifamily water heating system distribution losses can exceed 30 percent. The heating device must meet this recovery load (end use plus distribution losses) minus any contribution from auxiliary heat inputs, such as a solar thermal system. Total building water heating energy use is comprised of the end use, heater inefficiencies, standby loss, and distribution system inefficiencies.

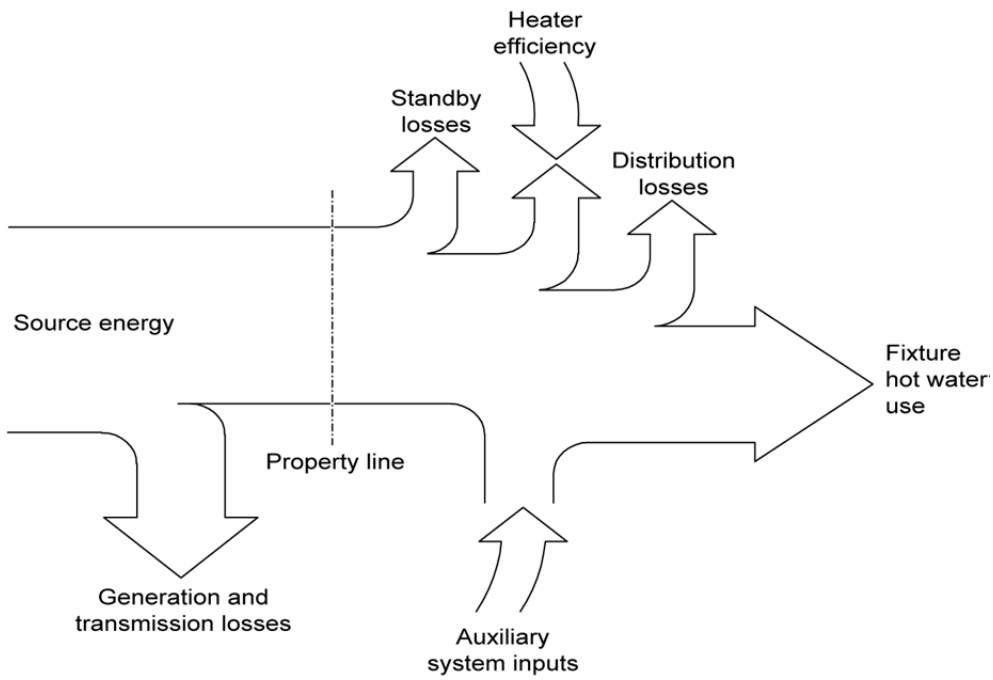

Figure 5-1 – Water Heating Energy Flow Representation

5.1.2 What's New for 2013

The key changes in water heating code from 2013 are listed below and are distinguished between two cases: one or more water heaters serving a single dwelling unit, and a central multi-family design where one or more water heaters serves many dwelling units:

One or more water heating systems serving a single dwelling unit (includes single family homes and dedicated water heating systems serving a single dwelling unit in multi-family and hotel/motel buildings).

1. New Mandatory Requirements:
    a. A 120 V electrical receptacle that is within three feet of the water heater and accessible to the water heater with no obstructions; and,
    b. A Category III or IV vent, or a Type B vent with straight pipe between the outside termination and the space where the water heater is installed; and,
    c. A condensate drain that is no more than 2 inches higher than the base of the installed water heater, and allows natural draining without pump assistance, and,
    d. A gas supply line with a capacity of to provide at least 200,000 Btu/hr to the water heater.

2. New Prescriptive Requirements:

    a. Increased solar water heating requirement for electric resistance water heating systems. Under the 2013 standards, the minimum solar thermal water heating system size has increased from a solar savings fraction (SSF) of 25% to at least 50%.

3. New Performance Compliance Options:

    a. The Point of Use Distribution multiplier now applies to systems with water heaters no more than (5 feet of ¾ inch), (10 feet of ½ inch), or (15 feet of 3/8 inch) of pipe from any point of use are acceptable alternatives. Distances are measured in plan view, allowing for water heaters on either the first or second floor to serve points located on the floor above or below, hence ignoring the direct vertical length of pipe from the water heater. This measure requires HERS verification.

    b. HERS verified Compact Distribution System credit has been added as a new compliance option credit. The furthest hot water use point from the water heater must be field-measured and shown to be within a prescribed distance from the water heater. This measure requires HERS verification

    c. Additional optional HERS verification elements have been added to offer credits for verified quality pipe insulation installation on both recirculating and non-recirculating distribution systems. This measure requires HERS verification.

    d. Central home run manifold systems located within 5 feet of the water heater will receive a small compliance credit. This measure requires HERS verification.

Multi-family central distribution systems (One or more central water heaters serving multiple dwelling units):

1. New Mandatory Requirements:

    a. Dwelling unit pipe insulation is now required on all hot water distribution piping greater than ¾ inch diameter, as well as all piping from the water heater to the kitchen. For central multi-family systems, all piping in the recirculation loop must be insulated. This requirement applies to the distribution to each dwelling unit.

2. New Prescriptive Requirements:

    a. Demand recirculation controls are the default basis of the performance energy budget for buildings with central recirculation systems.

b. Solar water heating is required for all climate zones. The required solar savings fractions are either 20% or 35%, depending on the climate zone.

c. Water heating recirculation systems are required to be designed with two recirculation loops. This measure must be HERS verified to ensure that two sets of recirculation loops are put in place from either the same or separate water heating equipment. Buildings with 8 units or less are not required to meet this requirement

3. New Performance Compliance Options:

While demand recirculation controls are the basis of the performance energy budget, both temperature modulation controls and time clock controls can be used for performance compliance. Using temperature modulation controls will require additional energy efficiency measures to offset higher energy consumption due to higher recirculation loop pipe heat loss than those for demand controls. Using time clock controls will require even more efficiency measures to offset relatively high heat losses from recirculation loops using this control strategy.

More detailed recirculation piping system design information, including number of recirculation loops, pipe lengths, diameters, and locations, is required to properly calculate energy consumption due to recirculation pipe heat loss. The prescriptive requirement is to install two recirculation loops, connected to the same or separate water heating equipment. These installation requirements are not applicable to central system serving 8 or fewer units. If just one recirculation loop is used, pipes need to be sized according to hot water demand of all dwelling units. As a result, larger pipes than those in dual loop systems have to be installed, which lead to larger pipe surface area and higher heat loss. Dual recirculation loop designs have to be verified by a HERS rater in order to receive the compliance credit. Systems with more than two recirculation loops will NOT be given additional compliance credit.

In addition to the dual recirculation loop requirement, the Standard also incorporates a performance calculation method to verify user input of recirculation designs. Energy budget of the recirculation system is determined based on an optimized recirculation system design with two recirculation loops and optimized pipe routing. The performance calculation method also generates a default design based on best practices, which is not as good as the optimized design. Both the optimized design and the default design are generated according to building characteristics such as floor area, number of dwelling units, and number of storied. The default design can be used for compliance to avoid providing detailed recirculation system design information. However, note that the default design uses more energy than what is established by the energy budget and, therefore, requires other efficiency measures to make up the difference. A dual loop design with HERS verification is the only possible compliance option to match the performance of the optimized design, For all other user-input designs, the total pipe surface area will be adjusted to match that of the default (best practice) design, if it is smaller.

5.2 Water Heating Equipment

5.2.1 Water Heater Types

There are several different types of equipment used for producing domestic hot water. Any water heater type used for compliance must be recognized under the appliance regulations. The most commonly used water heater for single family homes is either small storage gas or instantaneous (tankless) gas units. For multi-family buildings, two options are commonly used: either one or more commercial storage water heaters or one or more boilers coupled with a storage tank to serve the entire building. Alternatively, individual water heaters are installed in each dwelling unit (similar to single family).

1. Small Storage Gas Water Heaters

Storage water heater means a water heater that heats and stores water within the appliance at a thermostatically-controlled temperature for delivery on demand, and that has an input less than 4,000 Btu per hour per gallon of stored water.

Small Storage Water Heater is defined as a water heater that is a gas storage water heater with an input of 75,000 Btu per hour or less, an oil storage water heater with an input of 105,000 Btu per hour or less, an electric storage water heater with an input of 12 kW or less. All small storage water heaters are rated using an Energy Factor. This value represents the combination of the units firing efficiency and standby loss over a 24 hour period.

Application Issues

In California, a vast majority of small water heaters are atmospheric natural gas water heaters, despite the fact that they are relatively inefficient due to high standby losses. Historically these units are the cheapest to install and operate in California. Due to observed California hot water loads that are considerably lower than assumed in the Energy Factor rating test the typical California performance of small storage water heaters is lower than their ratings.

2. Large Storage Gas

Large Storage Gas is a storage gas water heater with input capacity greater than 75,000 Btu/h. They are rated with an AFUE and either a total standby loss numeric value or a percent standby loss..

Application Issues

These units offer higher capacity and generally greater storage volume, and are therefore better suited for high load situations, including combined hydronic space and water heating applications. Many of the products available in this category are higher efficiency. These units typically require an electrical connection for controls and combustion air blowers.

3. Small Storage Electric

A Storage Electric water heater is an electric water heater designed to heat and store water at less than 180°F. Water temperature is controlled with a thermostat. Storage electric water heaters have a manufacturer's specified storage capacity of at least two gallons.

Application Issues

Storage electric water heaters represent less than 6% of the installed residential water heaters in California, and are often found in areas where natural gas is unavailable. For most of the state, relatively inexpensive natural gas is a much more economical water heating approach for the consumer.

4. Storage Heat Pump

A Storage Heat Pump is an electric water heater that uses a compressor to transfer thermal energy from one temperature level to a higher temperature level for the purpose of heating water. It includes all necessary auxiliary equipment such as fans, storage tanks, pumps or controls.

Application Issues

Energy Factors for heat pump water heaters are found in the Energy Commission's Appliance Database under Certified Water Heaters. In recent years, heat pump water heaters have started to gain a greater national presence, since they offer roughly 50% savings relative to a standard storage electric water heater. None of the prescriptive packages allow the use of heat pump water heaters but they can be applied for water heating using the performance approach.

Heat pump water heater performance, more than other water heater types, is sensitive to a variety of factors including: operating mode and set point, hot water loads and load intensity (short, intense draws reduce efficiency), climate, and unit location (environment temperature). Most manufacturers suggest that the unit be installed in space with a volume of at least 700 ft^3 to provide a sufficient quantity of air to allow for more efficient heat pump operation. Indoor located units may offer space conditioning benefits in hotter climate areas, although noise may be a potential concern.

5. Instantaneous (Tankless) Gas

Instantaneous gas water heaters are defined as a water heater that has an input rating of at least 4,000 Btu per hour per gallon of stored water. These units, commonly referred to as gas tankless water heaters, operate their burner in response to water flow heating the water flowing through the heat exchanger (typical volumes around 0.5 gallons). The main efficiency benefit of associated with these units is the elimination of standby losses common to storage water heaters. Virtually all of these units require an electrical connection for controls and combustion air blower.

Application Issues

Instantaneous units are recognized as being optimistically rated by the Energy Factor test, due to the test procedures specification of only six draws during the 24 hour test period. Field data suggests a ~10% degradation in performance due to real world loads and draw patterns. Although performance is sensitive to the number of draw events and average draw volume size, in general instantaneous efficiency is much less sensitive to daily hot water load than storage water heaters. Installation issues related to instantaneous units include the need for a larger gas line (typical input ratings of 140 – 200 kBtu/hr), alternative venting systems, and electrical connection. For retrofits, this can be a major added cost.

Instantaneous water heaters have minimum flow rates for initiating burner firing, resulting in some low flow rate hot water draws not being satisfied. In addition, firing

from a cold start requires an additional 15-30 seconds of delay before fully heated water leaves the unit. This has implications in terms of water waste and occupant satisfaction. Care must also be taken in matching tankless unit with recirculation pumps (pumps must be sized to overcome high unit pressure drop) and solar systems (tankless firing becomes intermittent as inlet temperature approach the setpoint temperature). Finally, maintenance of instantaneous units is more critical than for a conventional water heater, especially in areas with hard supply water, due to potential heat exchanger scaling problems. Despite these potential issues, instantaneous sales have increased dramatically over the past ten years, with a recent study suggesting that 25% of new California homes have gas instantaneous water heaters.

Instantaneous water heaters are occasionally installed with small electric storage buffer tanks either internally or downstream of the instantaneous unit to mitigate the potential for cold water sandwich effects, an effect which may cause fluctuating delivery temperatures. If a buffer tank is installed the buffer tank must be modeled as a separate electric water heater. If the buffer tank is installed downstream of the instantaneous system the buffer tank must be listed in the CEC Appliance Directory and the listed wattage of the unit will be entered into the compliance software. For instantaneous units with integral buffer tanks the rated wattage on the manufactures cut sheet should be used.

6. Instantaneous (Tankless) Electric

An Instantaneous Electric water heater is an electric water heater controlled automatically by a thermostat, with a manufacturer's specified storage capacity of less than 2 gallons.

Application Issues

Instantaneous electric water heaters are not generally designed for use with solar water heating systems or as heat sources for indirect fired water heaters. They are also typically inappropriate for use with recirculation systems. Consult manufacturer's literature when considering these applications.

Instantaneous electric units offer several advantages over electric storage water heaters: smaller size, reduction in standby losses, and ability to locate remotely resulting in reduced distribution losses. Countering this is the need for upsized electrical service to handle the demands (up to 30 kW) associated with instantaneous heating of the water. In areas without natural gas, these systems may provide some operating cost savings, however for the majority of California, the abundance and low cost of natural gas creates a difficult environment for this technology to succeed.

7. Hot Water Supply Boiler

A hot water supply boiler is industrial water heating equipment with a heat input rate from 300 kBtu/hr to 12,500 kBtu/hr and at least 4,000 Btu/hr per gallon of stored water. A hot water boiler should have either the temperature and pressure control necessary for heating potable water for purposes other than space heating, or the boiler manufacturer’s literature should indicate that the boilers’ intended uses include heating potable water for purposes other than space heating. A hot water boiler could be fueled by oil or gas, and it must adhere to the minimum thermal efficiency and maximum standby loss as described in California’s Title 20 Appliance Standards in effect.

Application Issues

Boilers are typically used for doing both space heating and water heating. Use of a boiler will typically require one or more unfired storage tanks to be installed as part of the system. Careful attention should be given to the layout of these systems due to the potential for high energy losses between the boiler and storage tanks.

5.2.2 Mandatory Requirements for Water Heaters

1. Equipment Certification

§110.3(a)

Manufacturers must certify that their products comply with the Appliance Efficiency Regulations at the time of manufacture. Regulated equipment which applies to all of the aforementioned system types in Section 5.2.1 must be listed in the California Energy Commission appliance database.

2. Equipment Efficiency

§110.3(b), §110.1

Small water heaters are regulated by federal efficiency standards. The efficiency requirements for such equipment are given in Table 5-1below. Note that on April 16, 2015 the federal standards change, requiring higher efficiencies for most product classes and also classifying storage water heaters into two categories: ≤ 55 gallons volume, and > 55 gallons. The larger volume units will require higher performance. For gas water heaters with > 55 gallon storage volume, the efficiency levels dictate condensing performance, while for electric storage water heaters > 55 gallons, the efficiency level suggest performance comparable to a heat pump water heater.

Table 5-1 – Minimum Energy Factor Requirements

Type	Size	Energy Factor (EF) (Effective date January 1, 2014)	Energy Factor (EF) (Effective date April 16, 2015)
Gas Storage (≤ 55 gallons)	≤ 75 Btu/hr	0.67-(0.0019*V)	0.675-(0.0015*V)
Gas Storage (> 55 gallons)	≤ 75 kBtu/hr	0.67-(0.0019*V)	0.8012 – (0.00078*V)
Gas Instantaneous	≤ 200 kBtu/hr	0.62	0.82
Oil Storage	≤ 105 kBtu/hr	0.59-(0.0019*V)	0.68-(0.0019*V)
Oil Instantaneous	≤ 210 kBtu/hr	0.59-(0.0019*V)	
Electric Storage (≤ 55 gallons, exc. table top)	≤ 12 kW	0.97-(0.00132*V)	0.96-(0.0003*V)
Electric Storage (> 55 gallons, exc. table top)	≤ 12 kW	0.97-(0.00132*V)	2.057 – (0.0013 *V)
Electric Table Top	≤ 12 kW	0.93-(0.00132*V)	No change
Electric Instantaneous (exc. table top)	≤ 12 kW	0.93-(0.00132*V)	No change
Heat pump Water Heater	≤ 24 Amps	0.97-(0.00132*V)	See Electric Storage >55 gallons

The energy efficiency of equipment that is larger than the Table 5-1 specifications is regulated by the California Appliance Efficiency Regulations. Energy Factor is not applicable for this equipment, but rather minimums are specified for thermal efficiency and standby loss as shown in Table 5-2.

Table 5-2 – Minimum Energy Factor Requirements - Large Water Heaters

Appliance	Input to Volume Ratio	Size (Volume)	Minimum Thermal Efficiency (%)	Maximum Standby Loss[1,2]
Gas storage water heaters	< 4,000 Btu/hr/gal	any	80	Q/800 + 110(Vr)1/2 Btu/hr
Gas instantaneous water heaters	≥ 4,000 Btu/hr/gal	< 10 gal	80	–
		≥ 10 gal	80	Q/800 + 110(Vr)1/2 Btu/hr
Gas hot water supply boilers	≥ 4,000 Btu/hr/gal	< 10 gal	80	–
		≥ 10 gal	80	Q/800 + 110(Vr)1/2 Btu/hr
Oil storage water heaters	< 4,000 Btu/hr/gal	any	78	Q/800 + 110(Vr)1/2 Btu/hr
Oil instantaneous water heaters	≥ 4,000 Btu/hr/gal	< 10 gal	80	–
		≥ 10 gal	78	Q/800 + 110(Vr)1/2 Btu/hr
Oil hot water supply boilers	≥ 4,000 Btu/hr/gal	< 10 gal	80	–
		≥ 10 gal	78	Q/800 + 110(Vr)1/2 Btu/hr
Electric storage water heaters	< 4,000 Btu/hr/gal	any	–	0.3 + 27/Vm %/hr

[1] Standby loss is based on a 70° F temperature difference between stored water and ambient requirements. In the standby loss equations, Vr is the rated volume in gallons, Vm is the measured volume in gallons, and Q is the nameplate input rate in Btu/hr.

[2] Water heaters and hot water supply boilers having more than 140 gallons of storage capacity are not required to meet the standby loss requirement if the tank surface is thermally insulated to R-12.5, if a standing pilot light is not installed, and for gas- or oil-fired storage water heaters, there is a flue damper or fan-assisted combustion.

3. Storage Tank Insulation

§150.0(j)1 Tank Insulation

A minimum
R-12 external tank wrap is a mandatory requirement for minimum efficiency storage water heaters.

§110.3(c)4

Any unfired tanks (used as a back-up for solar water heating or as storage for a boiler) must either be insulated externally with R-12 or have a label indicating the tank is internally insulated with R-16. Alternatively, a tank can comply with this mandatory measure if calculations are provided that show that the average heat loss is less than 6.5 Btu/hr-ft² when there is a temperature difference of 80°F between the water in the tank and the ambient air.

4. High Efficiency Water Heater Ready

§150.0(n)

In order to facilitate future installations of high efficiency equipment, the Standards has implemented the following requirements for systems using gas or propane water heaters to serve individual dwelling units:

a. A 120 V electrical receptacle that is within three feet of the water heater and accessible to the water heater with no obstructions; and,

b. A Category III or IV vent, or a Type B vent with straight pipe between the outside termination and the space where the water heater is installed; and,

c. A condensate drain that is no more than 2 inches higher than the base of the installed water heater, and allows natural draining without pump assistance, and,

d. A gas supply line with a capacity of to provide at least 200,000 Btu/hr to the water heater.

These requirements make it easier for someone to retrofit high efficiency gas water heaters in the future. Virtually all high efficiency gas water heaters require an electrical connection and wiring during initial construction stage is much less costly than trying to retrofit it later.

Table 5-3 below summarizes venting requirements for different types of water heaters. Higher efficiency water heaters often require different vent materials due to the presence of acidic condensation from flue gases. The standard Type B vent installed for conventional atmospheric gas water heaters is made of steel and would soon be destroyed by the condensate. As a result, this standard requires that the only time one can use a Type B vent for the water heater is when there is a straight shot between the water heater and where the vent leaves the building. The application of the word straight is intended to require that installation meet all code and manufactures guidelines. Because category III and IV pipes are usually smaller than those for Type B vents, a straight Type B vent can be easily modified into a category III or IV vent by simply inserting a new vent pipe through the existing Type B vent pipe. A flue pipe that makes bends though the building structure is not easy to retrofit and thus these flues must be either category III or IV vent pipes. Please note that only stainless steel category III and IV vents are compatible with typical atmospheric combustion storage water heaters. The requirement for the condensate drain being placed near the water heater and no higher than the base of the tank allows the condensate to be removed without relying on a sump pump.

Designing the gas line to provide 200,000 Btu/hr gas supply capacity to the water heater is required to accommodate future retrofit to a tankless (instantaneous) water heater, which usually has a heat input capacity of 199,000 Btu/hr or above. Similar to the electrical requirement, installing a larger gas line during new construction is very inexpensive relative to a future gas line retrofit. Gas pipe sizing for the building needs to consider piping layout and gas supply requirements for other gas appliances as well, such as gas clothes dryers, gas furnaces, gas ranges and ovens, and gas fireplace burners. The tradition practice of using a ½ inch gas pipe in a single family house to serve a storage water heater will NOT be able to meet the new standard requirement. The minimum gas pipe size for water heaters will be ¾

inch. However, the exact gas piping system should be designed following the applicable plumbing code.

Table 5-3 – Summary of Acceptable Vent Material by Appliance Category

Appliance Venting Category	*Vent Pressure*	*Condensing or Non-Condensing*	*Common Vent Pipe Material*
Category I: An appliance that operates with a non-positive vent static pressure and with a vent gas temperature that avoids excessive condensate production in the vent	*Non-positive; atmospheric vented; gravity vented; most common category of gas-fired water heaters.*	*Non condensing (typically less than 82% efficiency)*	*Metal double wall "B" vent*
Category II: An appliance that operates with a non-positive vent static pressure and with a vent gas temperature that may cause excessive condensate production in the vent	*Non-positive*	*Condensing*	*Special venting material per the product manufacturer*
Category III: An appliance that operates with a positive vent static pressure and with a vent gas temperature that avoids excessive condensate production in the vent	*Positive (usually created by a blower motor); generally cannot be adjoined to gravity-vented water heater.*	*Non condensing (typically less than 82% efficiency)*	*Stainless Steel; these usually require 3" clearance to combustibles and the joints must be sealed air tight.*
Category IV: An appliance that operates with a positive vent static pressure and with a vent gas temperature that avoids excessive condensate production in the vent	*Positive (usually created by a blower motor); generally cannot be adjoined to gravity-vented water heater.*	*Condensing*	*Plastic pipe (PVC, CPVC, ABS, etc.)*

5.3 Distribution Systems

5.3.1 Types of Water Heating Distribution Systems

The water heating distribution system is the configuration of piping (and pumps and controls in the case of recirculating systems) that delivers hot water from the water heater to the end use points within the building. For systems designed for single family buildings or individual dwelling units in a building the system will resemble one of the system types described below under dwelling unit distribution systems. In multi-family buildings the use of a central water heater and central recirculation distribution system that brings hot water close to all the dwelling units is also common. A description of the recognized systems for serving single and multiple dwelling units are listed in the following two sections. Any hot water distribution system that is installed that does not meet all of the installation guidelines discussed in this manual and in the Residential Appendix RA3 and RA4 must either have the deficiencies corrected or compliance calculations must be redone using the performance approach assuming that the installed distribution system is sub-standard.

5.3.2 Systems Serving Single Dwelling Unit

1. Standard Distribution System (Trunk and Branch and mini-manifold configurations)

The most basic plumbing layout, and assumed as the reference design in the performance approach is represented by the conventional trunk and branch layout. This layout of a trunk and branch system may include one or more trunks each serving a portion of the building. The trunks are subdivided or branch off into branches, which serve specific rooms, and these are in turn divided into twigs which serve a particular point of use. This distribution system class includes mini-manifold layouts (see Figure 5-2 which incorporate trunk lines feeding remote manifolds that then distribute via twigs to the end use points. A Standard Distribution System may not incorporate a pump for hot water recirculation. Piping cannot be run up to the attic and then down to points of use on the first floor.

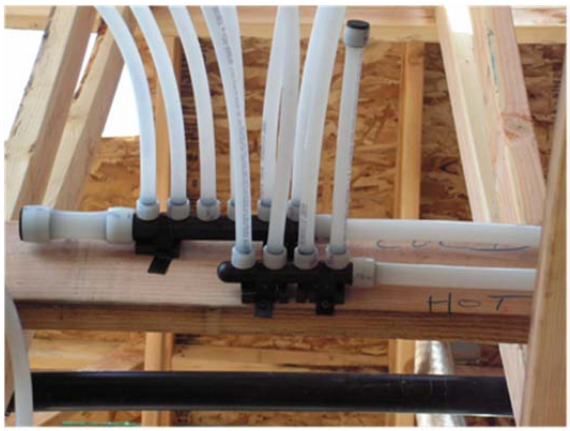

Figure 5-2 – Mini Manifold Configuration

Installation Criteria and Guidelines

No pumps may be used to recirculate hot water with the Standard system. All applicable mandatory features must be met. When designing a trunk and branch the concern is keeping all segments of the system as short and as small a diameter as possible. Even an insulated pipe will lose most of its stored heat within thirty minutes. The other issue to realize is that if a cold line is to get hot water, it will require not only running out all the water in the pipe but up to an additional third of the volume again to heat the pipe enough so that the water at the point of use will be an acceptable temperature. The adopted requirements for installation guidelines are included in RA3 and RA4.

1. Central Parallel Piping System

The primary design concept in a central parallel piping system is an insulated main trunk line runs from the water heater to one or more manifolds, which then feeds individual use points with ½" or smaller plastic piping. The traditional central system with a single manifold (Figure 5-3) must have a maximum pipe run length of 15 ft between the water heater and the manifold. With the advent of mini-manifolds, the central parallel piping system can now accommodate multiple mini-manifolds in lieu of the single central manifold, provided that a) the sum of the piping length from the water heater to all the mini-manifolds is less than 15 ft, b) all piping downstream of the mini-manifolds is nominally ½" or smaller.

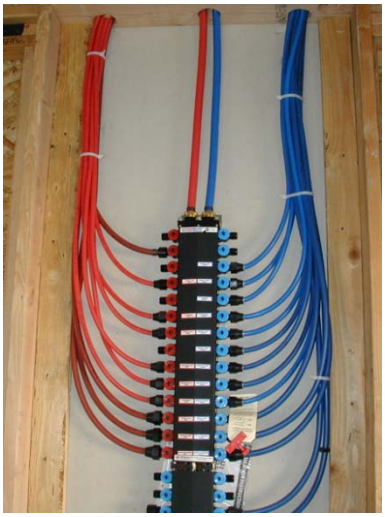

Figure 5-3 – Central Manifold System

Installation Criteria and Guidelines

All applicable mandatory measures must be met. Piping from the manifold cannot be run up to the attic and then down to points of use on the first floor. The intent of a good parallel piping design is to minimize the volume of water entrained in piping between the water heater and the end use points, with a focus on reducing the length of the 3/4 inch or 1 inch line from the water heater to the manifold(s). To encourage reducing the water heater to manifold length, there is a distribution system compliance credit for installations that are HERS-verified to have no more than 5 ft of piping between the water heater and the manifold(s). The manifold feeds individual hot water use points with 3/8 or 1/2 inch PEX) tubing. (Check with local jurisdictions on the use of 3/8 inch piping, since many do not allow it without engineering approval.) The adopted requirements for installation guidelines are included in RA3 and RA4.

2. Point of Use

A point of use distribution system design significantly reduces the volume of water between the water heater and the hot water use points. To use this type of system will requires a combination of good architectural design (water heater location adjacent to hot water use points), an indoor mechanical closet, or the use of multiple water heaters. Figure 5-4 provides an example of the latter approach where three water heaters are installed in close proximity to the use points. For compliance with this credit, HERS verification is required. This system is not applicable to systems serving multiple dwelling units.

Installation Criteria and Guidelines

All applicable mandatory features must be met, and the distance between the water heater and any fixture using hot water cannot exceed the length specified in Table 5-4 below, as measured by the HERS rater. The adopted requirements for installation guidelines are included in RA3 and RA4. All water heaters and hot water fixtures must be shown on plans submitted for local building department plan check.

Exception: Washing machines for clothing may be located more than 8 feet from the water heater.

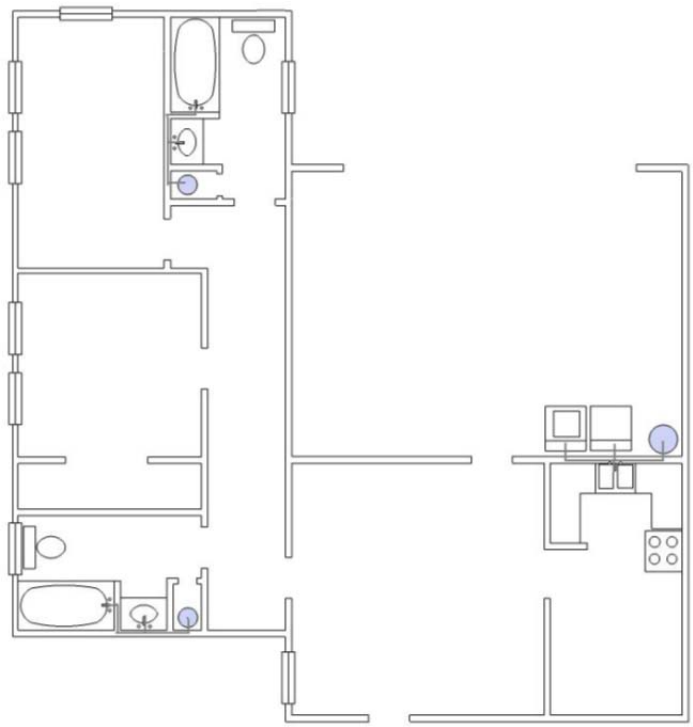

Figure 5-4 – Point of Use Distribution System

Table 5-4 – Point of Use Distribution System

Size Nominal, Inch	Length of Pipe (feet)
3/8”	15
1/2”	10
3/4”	5

3. Compact Design

A compact distribution system design means that all the hot water use points in a non-recirculating distribution system are within a specified length of piping to the water heater that serves those fixtures. Table 5-5 below specifies the maximum pipe run length that meets the compact design criteria based on floor area served (floor area served = building conditioned floor area divided by the number of water heaters), which recognizes that multiple water heaters may be beneficial in achieving a more compact distribution system. To be eligible, for the compact credit, the length must be physically measured and field-verified by a HERS rater. The adopted requirements for installation guidelines are included in RA3 and RA4.

Typical hot water distribution designs are often much larger than they need to be in terms of pipe length. A big part of the problem is a house design process which doesn’t take into account the location of the water heater relative to bathrooms and kitchen use points. Figure 5-5 below shows a fairly common house layout with the water heater located in the corner of the garage, and hot

water use points in each corner of the house. A much improved house design is shown in Figure 5-6, where the water heater location is in close proximity to the kitchen and bathrooms and laundry area. Early in the design stage, the location of hot water use points can play a big role in achieving the benefits associated with a compact distribution system design.

Figure 5-5 – "Common" Production Home House Layout

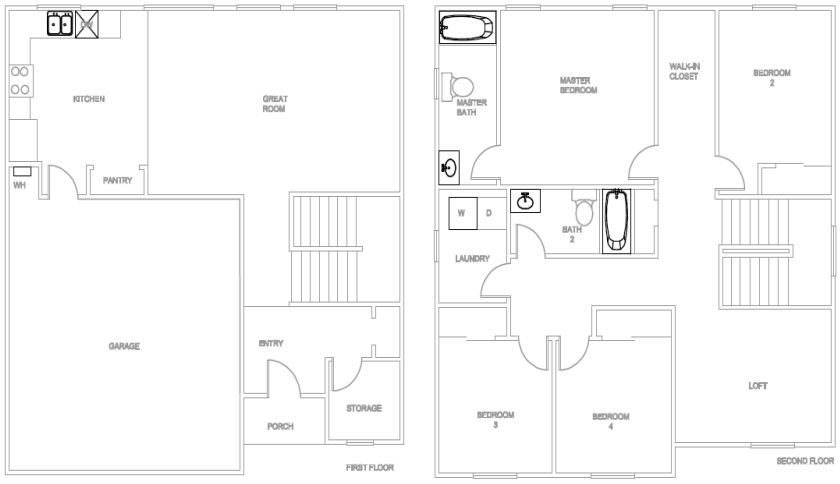

Figure 5-6 – Compact Design Distribution System

Table 5-5 – Compact Distribution System

Floor Area Served (ft^2)	Maximum Water Heater To Use Point Distance (ft)
< 1000	28’
1001 – 1600	43’
1601 – 2200	53’
2201 – 2800	62’
>2800	68’

4. Recirculation System – Non-Demand Control Options

This distribution system type encompasses all recirculation strategies that do not incorporate a demand control strategy to minimize recirculating pump operation. Under this category, recirculation system types include uncontrolled continuous recirculation, timer control, temperature control, and time/temperature controls. The intent is to clearly distinguish between recirculation system control options that result in very little daily pump operating time (demand control strategies) and the other strategies, where pump run time is much more uncertain. Recirculation systems are known to save water (since the hot water is much closer to the use points), but the energy impact can be very high in a poorly designed and/or controlled system.

Installation Criteria

All piping used to recirculate hot water must be insulated to meet the mandatory requirements. Since the Standards require pipe insulation for recirculating systems, these systems are not eligible for the Pipe Insulation credit. For systems serving a single dwelling unit, the recirculating loop within a dwelling unit must be laid out to be within 8 ft of all hot water fixtures served by the recirculating loop. As with all recirculation systems, an intelligent loop layout (loop in-board of hot water use points) and proper insulation installation are essential in obtaining desired performance. Piping in a recirculation system cannot be run up to the attic and then down to points of use on the first floor. The adopted requirements for installation guidelines are included in RA3 and RA4

5. Recirculation System – Demand Control

A demand-control recirculation system uses brief pump operation in response to a hot water demand “signal” to circulate hot water through the recirculation loop. The system must have a temperature sensor, typically located at the most remote point of the recirculation loop. The sensor provides input to the controller to terminate pump operation when the sensed temperature rises. Typical control options include manual push button controls or occupancy sensor controls installed at key use areas (bathrooms and/or kitchen). Push button control is preferred from a performance perspective, since it eliminates “false signals” for pump operation that an occupancy sensor could generate. The adopted requirements for installation guidelines are included in RA3 and RA4

Installation Criteria

All criteria listed for continuous recirculation systems apply. Piping in a recirculation system cannot be run up to the attic and then down to points of use on the first floor.

Pump start-up must be provided by a push button, flow switch, or occupancy sensor. Pump shut-off must be provided by a combination of a temperature sensing device that shuts off the pump when hot water reaches the location of use, and by a timer which limits maximum pump run time to two minutes or less.

For a system serving a single dwelling, push buttons and sensors must be installed in all locations with a sink, shower, or tub, with the exception of the laundry room.

Plans must include a wiring/circuit diagram for the pump and timer/temperature sensing device and specify whether the control system is manual (push button or flow switch) or other control means, such as an occupancy sensor.

5.3.3 Systems Serving Multiple Dwelling Units

1. Multiple Dwelling Units: Central Demand Recirculation System (Standard Distribution System)

The standard distribution system for water heaters serving multiple dwelling units incorporates recirculation loops, which bring hot water to different parts of the building, and a demand control, which automatically shuts off the recirculation pump when the recirculation flow is not needed. In summary, central recirculation systems include three components, recirculation loops, branch pipes, and pipes within dwelling units. Recirculation loops are used to bring hot water close to all dwelling units, but are not expected to go through each dwelling unit. Branch pipes are used to connect pipes within dwelling units and the recirculation loops. This concept is illustrated in Figure 5-7. Designs of distribution systems within dwelling units are similar to those serving single dwelling units, described in Section 5.4.1.

Central recirculation water heating systems which use temperature, timer or no controls can use a default recirculation system type if performance compliance is used.

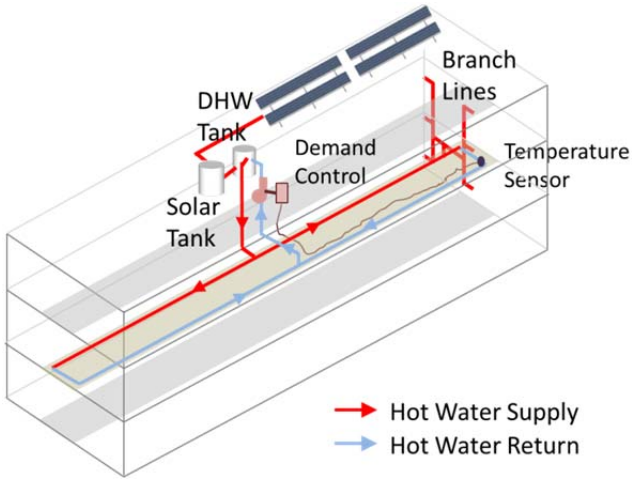

Figure 5-7 – Standard Multi-Family Central Distribution System

Demand controls for central recirculation systems are automatic control systems that control the recirculation pump operation based on measurement of hot water demand and hot water return temperatures.

2. Multiple Dwelling Units: Recirculation Temperature Modulation Control

A recirculation temperature modulation control shall reduce the hot water supply temperature when hot water demand is determined to be low by the control system. The control system may use a fixed control schedule or dynamic control schedules based measurements of hot water demand. The daily hot water supply temperature reduction, which is defined as the sum of temperature reduction by the control in each hour within a 24-hour period, shall be more than 50 degrees Fahrenheit to qualify for the energy savings credit. Qualifying equipment shall be listed with the Commission.

Recirculation systems shall also meet the requirements of §110.3.

3. Multiple Dwell Units: Recirculation Continuous Monitoring Systems

Systems that qualify as a recirculation continuous monitoring systems for domestic hot water systems serving multiple dwelling units shall record no less frequently than hourly measurements of key system operation parameters, including hot water supply temperatures, hot water return temperatures, and status of gas valve relays of water heating equipment. The continuous monitoring system shall automatically alert building operators of abnormalities identified from monitoring results. Qualifying equipment or services shall be listed with the Commission.

Recirculation systems shall also meet the requirements of §110.3.

4. Non-recirculating Water Heater System

Multi-unit buildings may also use systems without a recirculation system, if the served dwelling units are closely located so that the branch pipes between the water heating equipment and dwelling units are relatively short. Long branch lines will lead to excessive energy and water waste.

5.3.4 Mandatory Requirements for Distribution Systems

1. Pipe Insulation for All Buildings

§150.0(j)2 Pipe Insulation

Pipe insulation is a mandatory requirement in the following cases:

a. The first 5 feet of hot and cold water pipes from the storage tank or water heater.

b. All piping with a nominal diameter of ¾ inch or larger.

c. All piping associated within a domestic hot water recirculation system regardless of the pipe diameter. This excludes branches off of the recirculation loop that are less than ¾ inch diameter or do not serve the kitchen.

d. Piping from the heating source to a storage tank or between tanks.

e. Piping buried below grade.

f. All hot water pipes from the heating source to the kitchen fixtures.

In addition to insulation requirements, all domestic hot water pipes that are buried below grade must be installed in a water proof and non-crushable casing or sleeve that allows for installation, removal, and replacement of the enclosed pipe and insulation. Note that the installation show in Figure 5-8 below would not meet the installation requirements since they are not insulated if supplying the kitchen.

Figure 5-8 – Below Grade Piping

Piping exempt from the mandatory insulation requirement includes:

a. Factory installed piping within space conditioning equipment.

b. Piping that penetrates framing members is not required to have insulation where it penetrates the framing. However, if the framing is metal then some insulating material must prevent contact between the pipe and the metal framing.

c. Piping located within exterior walls which is installed so that piping is placed inside of wall insulation does not need to be insulated if all the requirements for Insulation Installation Quality are met (See Reference Residential Appendix RA4.4.1).

d. Piping located in the attic does not need pipe insulation if it is continuously buried by at least 4 inches of blown ceiling insulation. Piping may not be placed directly in contact with sheetrock and then covered with insulation to meet this requirement.

e. Piping that serves process loads, gas piping, cold domestic water piping (other than within five feet of the water heater), condensate drains, roof drains, vents, or waste piping.

Other installation information:

a. No insulation should be installed closer than 6 inches from the flue. If possible, bend the pipe away from the flue. Otherwise, it may be necessary to stop pipe insulation short of the

storage tank (see *2007 California Mechanical Code*, Chapter 3, Table 3-3).

b. All pipe insulation seams should be sealed.

c. Installed piping may not be located in supply or return air plenums. (see *2007 California Mechanical Code*, Chapter 3, Table 3-3).

d. Hot and cold water piping, when installed in parallel runs should be a minimum of 2 inches apart. (see RA4).

e. If a fire wall interrupts the first 5 ft of pipe, the insulation may be interrupted at the wall and continued on the other side.

f. Insulation for pipe elbows should be mitered and insulation for tees should be notched. (see RA4).

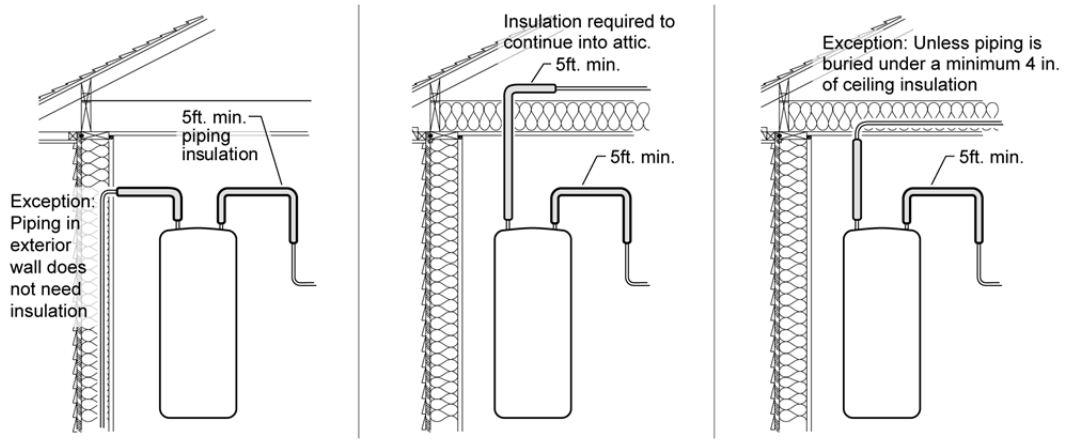

Figure 5-9 – Pipe Insulation Requirements First Five Feet from Water Heater

Standards Table 120.3-A

Where insulation is required as described above, one inch or R-4 insulation is typically required. This requirement applies to domestic hot water pipe (above 105° F) when the pipe diameter is 2 inches or smaller, the water temperature is between 105°F and 200°F, and the insulation conductivity between 0.24 and 0.28 Btu-in/hr-ft²-°F (typical of cellular foam pipe insulation material). One and one half inch insulation is required on pipes greater than 2 inches. For other situations refer to table 120.3-A.

Insulation Protection

§150.0(j)3

If hot water piping insulation is exposed to weather, it must be suitable for outdoor service. For typical cellular foam pipe insulation, this means protection with aluminum, sheet metal, painted canvas, plastic cover, or a water retardant paint coating that shields from solar radiation. Insulation must be protected by an external covering unless the insulation has been approved for exterior use using a recognized federal test procedure.

2. Distribution Systems Serving Multiple Dwelling Units – With Recirculation Loops

§110.3(c)5

Multi-family building may have individual water heaters for each unit, but they are more likely to have a central water heating system with a recirculation loop that supplies each of the units. This recirculation loop is comprised of a supply portion, of larger diameter pipe connected to smaller diameter branches that serve multiple dwelling units, guest rooms, or fixtures and a return portion that completes the loop back to the water heating equipment. The large volume of water which is recirculated during periods of high use creates situations that require the installation of certain controls and servicing mechanisms to optimize performance and allow for lower cost of maintenance. The following paragraphs cover the requirements for system serving multiple dwelling units and with recirculation loops; the corresponding compliance form is CF2R-PLMB-03-E.

a. Air Release Valves

§110.3(c)5A

The constant supply of new water in combination with the continuous operation of pump creates the possibility of the pumps cavitation due to air in the water. Cavitation is the formation of bubbles in the low pressure liquid on the suction side of the pump. The cavities or bubbles will collapse when they pass into the higher regions of pressure, causing noise, and vibration, which may lead to damage to many of the components. In addition there is a loss in capacity and the pump can no longer build the same head (pressure). Ultimately this impacts the pump's efficiency and life expectancy.

Cavitation shall be minimized by either the installation of an air release valve or mounting the pump vertically. The air release valve must be located no more than 4 ft from the inlet of the pump. The air release valve must be mounted on a vertical riser with a length of at least 12 inches.

b. Backflow Prevention

§110.3(c)5B

Temperature and pressure differences in the water throughout a recirculation system can create potentials for backflows. This can result in cooler water from the bottom of the water heater tank and water near the end of the recirculation loop flowing backwards towards the hot water load and reducing the delivered water temperature.

To prevent this from occurring, the Standards require that a check valve or similar device be located between the recirculation pump and the water heating equipment.

c. Equipment for Pump Priming/Pump Isolation Valves

§110.3(c)5C&D

A large number of systems are allowed to operate until complete failure simply because of the difficulty of repair or servicing. Repair labor costs can be reduced significantly by planning ahead and designing for easy pump replacement when the pump fails. Provision for pump priming and pump isolation valves help reduces maintenance costs.

To meet the pump priming equipment requirement, a hose bib must be installed between the pump and the water heater. In addition, an isolation valve shall be installed between the hose bib and the water heating equipment. This configuration will allow the flow from the water heater to be shut off, allowing the hose bib to be used for bleeding air out of the pump after pump replacement.

The requirement for the pump isolation valves will allow replacement of the pump without draining a large portion of the system. The isolation valves shall be installed on both sides of the pump. These valves may be part of the flange that attaches the pump to the pipe. One of the isolation valves may be the same isolation valve as in item C.

d. Connection of Recirculation Lines

§110.3(c)5E

Manufacturer's specifications should always be followed to assure optimal performance of the system. The cold water piping and the recirculation loop piping should never be connected to the hot water storage tank drain port.

e. Backflow Prevention in Cold Water Supply

§110.3(c)5F

The dynamic between the water in the heater and the cold water supply are similar to those in the recirculation loop. Thermosyphoning can occur on this side of this loop just as it does on the recirculation side of the system. To prevent this, the Standards require a check valve to be installed on the cold water supply line. The valve should be located between the hot water system and the next closest tee on the cold water supply line. Note that the system shall comply with the expansion tank requirements as described in the California Plumbing Code Section 608.3.

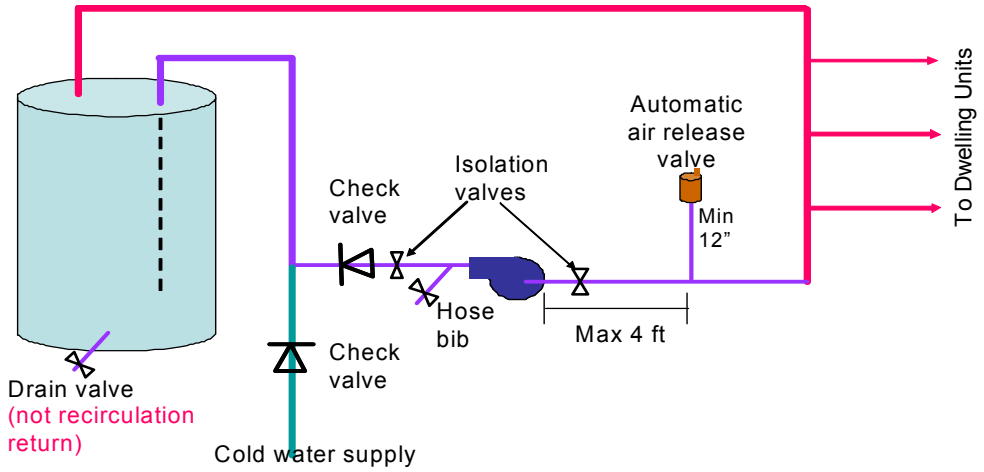

Figure 5-10 – Mandatory Central System Installation Requirements

Example 5-1 - Distribution Systems

Question

When I'm insulating the pipes for a recirculating water-heating system, I understand that I must insulate the entire length of hot water pipes that are part of the recirculation loop. Do I also need to insulate the runouts?

Answer

No. Since the water in runouts does not recirculate, they do not need to be insulated.

Example 5-2 - Recirculation system insulation

Question

Can I get pipe insulation credit for a recirculating water-heating system?

Answer

Not for systems serving a single dwelling unit. Recirculating water heating systems have a mandatory insulation requirement for the recirculating section of the hot water pipes. Pipes less than 2 inch must be insulated to R-4 and pipes greater than 2 inch need R-6 insulation. For systems serving multiple dwelling units, using R-6 where R-4 is required, and R-8 where R-6 is required, results in credit within the performance approach. All the circulation loop pipes in one location type (e.g., inside, outside, underground) must be insulated to the higher level to qualify.

Example 5-3 - Pipe Insulation

Question

I thought I was supposed to insulate hot and cold water piping from the water heater for either the first 5 ft or the length of piping before coming to a wall, whichever is less. Did I misunderstand?

Answer

Yes. The requirement is that you must insulate the entire length of the first 5 ft, regardless of whether there is a wall (§150.0(j)2). You have two options: (1) interrupt insulation for a fire wall and continue it on the other side of the wall or (2) run the pipe through an insulated wall, making sure that the wall insulation completely surrounds the pipe. The reason for this insulating the cold line requirement is that when heated, the water heater expands and pushes hot water out the cold water line. The first several feet of the cold water pipe near the water heater can be warm and insulation reduces the heat loss from the first 5 feet of the cold water piping.

5.3.5 Distribution System Compliance Limitations

1. Pipe Insulation

Insulation must meet the level required in the mandatory requirements. Note that pipes buried within ceiling or wall insulation can meet the mandatory requirements. The adopted requirements for installation guidelines are included in RA3 and RA4

2. Heat Tape

*If h*eat tape – electric resistance heating tape wrapped around hot water pipes – may be used only for freeze protection and cannot be used instead of mandatory pipe insulation (see §150.0(j)) or pipe insulation receiving distribution credit.

5.4 Prescriptive Water Heater and Distribution System Requirements

5.4.1 Single Dwelling Units

150.1(c)8

The conventional approach to meeting the prescriptive requirements of Package A for systems serving individual dwelling units the system would be to use either a small storage or instantaneous gas water heater as prescribed in the water heater Section 5.1. The distribution type options for a complying system would include either a conventional trunk and branch system or an on-demand recirculation system with manual controls. Both distribution systems must meet all of the mandatory requirements previously mentioned in this chapter. Other distribution system types do not meet the prescriptive requirement.

The other option under the prescriptive compliance method is to use the performance method for water heating only as defined in §150.1(b)1 and which is discussed in full in the performance compliance section later in this chapter. This path requires inputting the building square footage and detailing the water heater and distribution system information into the building performance compliance tool.

§150.1(c)8

With the changes in the 2013 standards there are actually three prescriptive options for domestic hot water heating in single family residences depending upon whether natural gas service is available at the site.

1. A system with a single gas or propane storage type water heater must have:
    a) A gas input rating < 75,000 Btu/h,
    b) If the water heater's efficiency only meets the minimum federal efficiency standards, the tank must be wrapped with an R-12 water heating blanket [a mandatory requirement in §150.0(j)1].
    c) If the system uses a trunk and branch distribution system then all pipes from the water heater to the kitchen must be insulated and all pipe with a diameter equal to or greater than ¾ of an inch must be insulated.
    d) If this system has a recirculation pump then the control must be demand based with manual controls (pump only runs upon user direct activation until water temperature equals temperature setpoint). All portions of the distribution system that recirculate water must be insulated.
    e) All applicable mandatory requirements in Section 110.3 and 150.0(j,n) must be met
2. A system with a single gas or propane instantaneous water heater without a storage tank must have:
    a) A gas input rating < 200,000 Btu/h,
    b) No supplemental storage tank is installed,

c) Uses a trunk and branch distribution system then all pipes from the water heater to the kitchen must be insulated and all pipe with a diameter equal to or greater than ¾ of a inch must be insulated.

d) All applicable mandatory requirements in Section 110.3 and 150.0(j,n) must be met

e) No recirculation systems can be installed.

3. An electric resistance storage or instantaneous water heater can be used if all of the following conditions are met:

   a) Natural gas is unavailable at the site

   b) The water heater is located within the building envelope

   c) For storage electric and instantaneous a trunk and branch distribution system must have all pipes from the water heater to the kitchen and must be insulated and all pipe with a diameter equal to or greater than ¾ of an inch must be insulated.

   d) All applicable mandatory requirements in Section 110.3 and 150.0 must be met

   e) A solar water heater is installed which is designed to provide a solar fraction of 50% (provides 50% of the heating load) and is installed as specified in the Reference Residential Appendix RA4. The details of the solar water heating prescriptive requirements are in described in more detail in Section 5.6.1 later on in this chapter.

   f) No supplemental storage tank is installed

   g) No recirculation system can be installed with electric instantaneous water heaters.

If a water heater is installed in combination with a booster heater used to either eliminate cold surges when an instantaneous water heater is the primary system, or used to reheat water in a portion of the system the booster heater must be included in compliance. All booster heaters must be treated a separate electric instantaneous water heaters. To comply, performance compliance must be used to demonstrate the installed system uses no more energy than what is allowed under the standards.

Questions and Answers – Single Family Systems

Example 5-4 - Single family with multiple water heaters

Question

A 6,000-ft² single family residence has 3 storage gas water heaters (40 gallon, 30 gallon and a 100-gallon unit with 80,000 Btu/h input). Does it comply?

Answer

A performance calculation is required since the system does not meet the standard requirements and must be shown to meet the water heating budget of §150.1(b)1. In most cases, adding a second storage water heater will result in greater energy consumption than the standard design case.

Example 5-5 - Single family with large storage gas water heater

Question

A single family residence has a 76,000 Btu/hr input 50-gallon gas water heater with an on-demand recirculating distribution system (with manual push button control).Does it comply with the prescriptive requirements?

Answer

Since the input rating is greater than 75,000 Btu/hr the unit is considered a large storage gas water heater. Compliance will have to be determined using the performance approach. If the water heater had an input rating less than 75,000 Btu/ hr it would qualify, since the proposed distribution system. qualifies as long as all mandatory measures are met.

Example 5-6 - Single family with point of use distribution system

Question

A 1,800 ft² single family residence has two identical 30-gallon gas storage tank water heaters and a distribution system that meets the point of use criteria. Does this comply?

Answer

Because there are two water heaters, this system does not meet the standard prescriptive water heating systems requirements of §150.1(f)8, regardless of the distribution system. To evaluate this design, it must be modeled using the performance approach.

Example 5-7 - Home Using Electric Water Heaters

Question

We plan to install a heat pump water heater in a single family home. Since heat pump water heaters have electric-resistance heating elements, are they considered as electric-resistance water heaters and subject to solar water heating requirements? How about for systems using a gas water heater as the primary water heater, but using under-sink electric heaters as booster heaters?

Answer

Heat pump water heaters are considered electric water heaters, but have different requirements for new construction and alterations when using the prescriptive approach New construction homes following prescriptive compliance method can install a heat pump water heater as the primary water heater if natural gas is not available to the home. A solar water heater with a minimum solar fraction of 0.5 must also be installed for prescriptive compliance. Upgrading an existing electric water heater to a heat pump water heater is not subject to the solar water heating requirement. Alternatively, one can model the heat pump water heater using the performance approach and likely not require the solar water heater.

When the primary water heater is a gas water heater, installing a solar water heater is not required for compliance purposes, even when small point-of-use electric water heaters are installed.

5.4.2 Multiple Dwelling Units: Multi-family, Motel/Hotels and High-Rise Nonresidential

§150.1(c)8

When using the prescriptive approach on multi-family buildings two options exist. Either individual water heaters must be installed in each unit that meet the requirements for single family building or a central gas or propane fired water heater

or boiler is required. The water heater must have an efficiency that meets the requirements in Sections 110.1 and 110.3 in the standards (as listed in Table 5-1 or Table 5-2 earlier in this chapter). In addition if a central recirculation system is installed it shall be installed with controls and a distribution layout that will include demand recirculation controls and at least two recirculation loops. These new prescriptive rules were added based on studies that found that recirculation pipe heat loss is a major component of energy loss within a central hot water system. Pipe heat loss is affected by the temperature difference between the hot water and ambient, pipe insulation level, and pipe surface area. The motivation behind having two loops is to reduce recirculation pipe sizes, thus pipe surface areas. This measure reduces energy uses and piping materials associated with recirculation systems. Central water heating systems with eight or fewer dwelling units are exempted from needing two recirculation loops.

1. Solar Water Heating Requirements

A new requirement for multi-family buildings with a central distribution system is that a solar water heating system be installed. Section 5.6 is entirely dedicated to solar water heating, and it includes detailed descriptions on associated mandatory and prescriptive requirements. The installed solar heating collectors must be certified by the Solar Rating and Certification Corporation (SRCC). Minimum solar fractions for each climate zone are listed below in Table 5-6, and documented on the corresponding compliance form.

Table 5-6 – Required Performance of Solar Systems Installed in Multi-family Buildings with Central Distribution Systems

Climate Zone	Minimum Solar Fraction
1-9	0.20
10-162	0.35

2. Duel Loop Recirculation System Design

150.1(c)8Cii

A dual-loop design is illustrated in Figure 5-11. In a dual-loop design, each loop serves half of the dwelling units. According to plumbing code requirements, the pipe diameters can be downsized compared to a loop serving all dwelling units. The total pipe surface area is effectively reduced, even though total pipe length is about the same as that of a single-loop design. For appropriate pipe sizing guidelines, please refer to the Universal Plumbing Code.

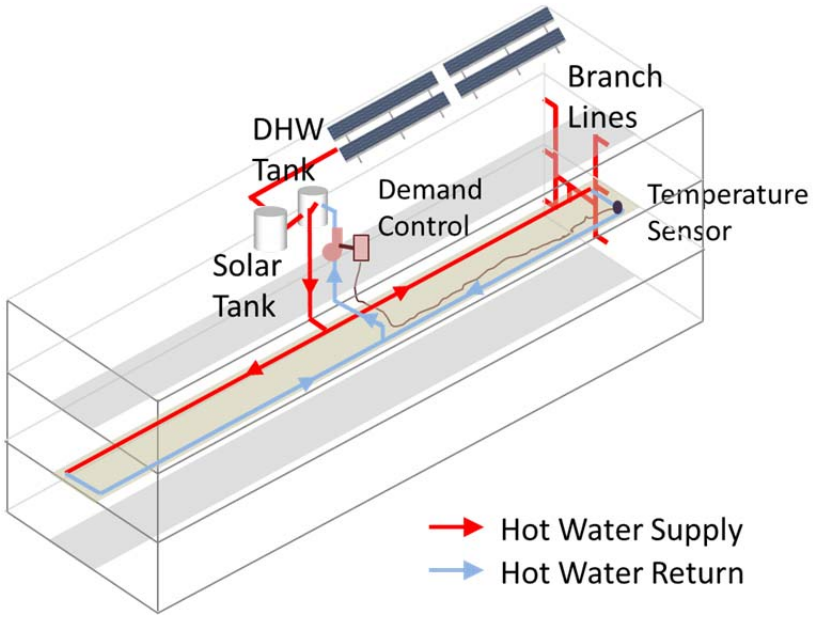

Figure 5-11 – Example of a Dual-Loop Recirculation System

Figure 5-12 provides an example of how to implement duel-loop design in a low-rise multi-family building with a simple layout. In this example, the water heating equipment is located in the middle of top floor with each recirculation loop serve exactly half of the building. The recirculation loops are located in the middle floor to minimize branch pipe length to each dwelling units. The figure also illustrates how the solar water heating system and demand control are integrated.

For buildings with complicated layouts, how to create and locate recirculation loops heavily depends on building geometry. In general, the system should be designed to have each loop serve the equal number of dwelling units in order to minimize pipe sizes. For systems serving buildings with distinct sections, e.g. two wings in an “L” shaped building, it is better to dedicate a separate recirculation loop to each of the sections. Very large buildings and buildings with more than two sections should consider using separate central water heating systems for each section. In all cases, simple routing of recirculation loops should be used to keep recirculation pipes as short as possible. Figure 5-12 provides dual-loop recirculation system designs in buildings with complicated shapes.

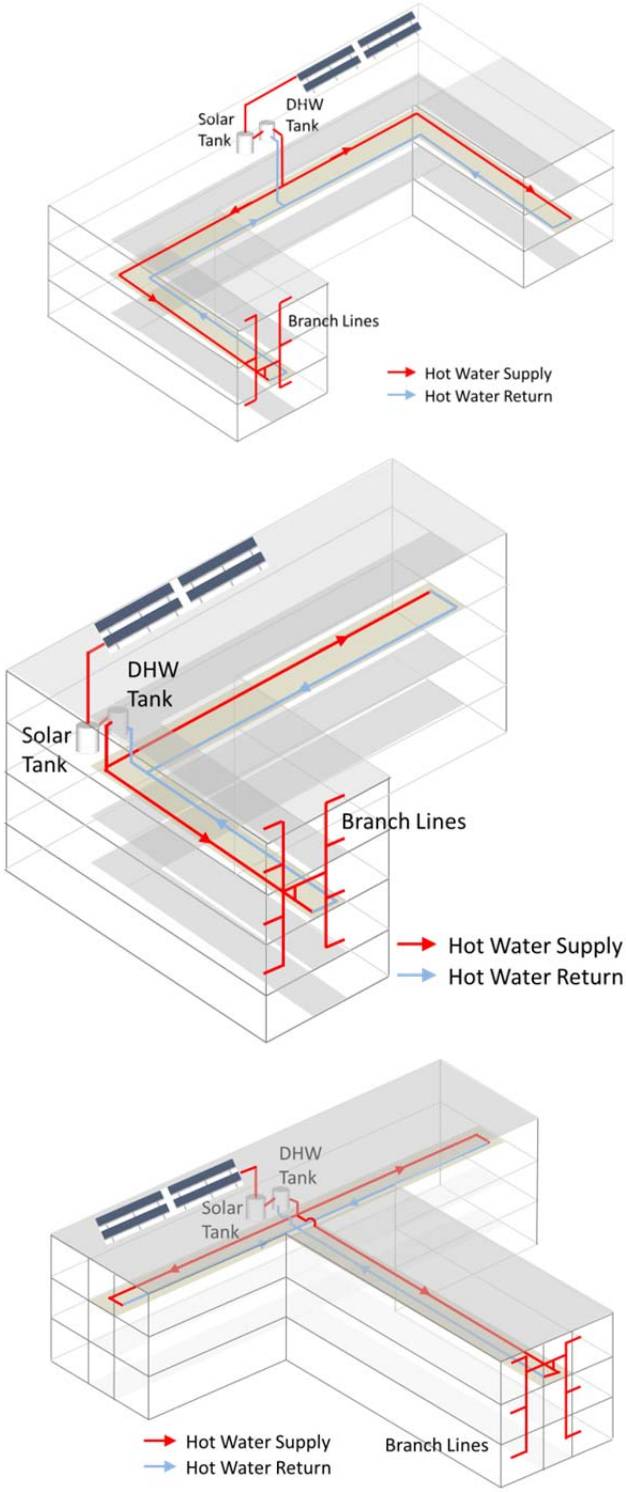

Figure 5-12 – Examples of dual-loop recirculation system designs in buildings of complicated shapes

Location of water heating equipment in the building also needs to be carefully considered to properly implement the dual-loop design. The goal is to keep overall

pipe length as short as possible. As an example, for building in regular shapes, locating the water heating equipment at the center of the building footprint rather than at one end of the building helps to minimize the pipe length needed to connect the water heating equipment to the two loops. If a water heating system serves several distinct building sections, the water heating equipment would preferably nest in between these sections.

With the new prescriptive solar water heating requirement this cycle, it is especially important to consider the integration between the hot water recirculation system and the solar water heating system. Based on feedbacks from industry stakeholders, most solar water heating systems are only configured as a pre-heater of the primary gas water heating equipment. In other words, recirculation hot water returns are usually plumbed back to the gas water heating storage tanks, not directly into the solar tank. This means recirculation loop designs should be mostly based on the building layout and are relatively independent of the solar water heating system. On the other hand, gas water heating equipment and solar tanks should be located closed to each other to avoid heat loss from pipes connecting the two systems. The preferred configuration is to place both the gas water heating equipment and solar tanks on the top floor near the solar collector so that the total system pipe length can be reduced. As noted before, minimizing pipe length helps reduced DHW system energy use as well as system plumbing cost.

3. Demand Recirculation Control

The prescriptive requirement for DHW systems serving multiple dwelling units requires the installation of a demand recirculation control to minimize pump operation. Please note that they are different from the demand control used in single dwelling unit, as described in the section 0. Demand controls for central recirculation systems are based on hot water demand and recirculation return temperatures. The temperature sensor should be installed at the last branch pipe along the recirculation loop.

Any system not meeting these prescriptive requirements must instead meet the *Standard Design Building* energy budget as described in §150.1(b)1, or must follow the performance compliance method for the building as a whole.

Example 5-8 - Multi-family with individual water heater

Question

A 10-unit multi-family building has separate gas water heaters for each dwelling unit. Five units have 30-gallon water heaters, and 5 units have 50-gallon water heaters. Does this comply?

Answer

The Standard provides two prescriptive compliance paths for domestic hot water heating systems in multi-family buildings. One is to use a central water heating system. The other is to use separate gas waters for each dwelling unit, as in this example. In order to use this compliance method, all dwelling units must use residential water heaters (heat input of less than 75,000 Btu/hr) with EF ratings equal or higher than corresponding Title 20 appliance standard requirements. .

Example 5-9 - Multi-family recirculation system

Question

We are building an 8-unit, 7,800 ft² multi-family building with a 200 gallon storage gas water heater with a time and temperature controlled recirculation system that has R-4 insulation on all the piping. The system serves all the units. Do I have to perform calculations to show compliance?

Answer

Water heating calculations are required since the standard design assumption uses demand recirculation for the control strategy for central recirculation. There is also the concern that solar water heating is required for all multi-family building with central recirculation systems.

Example 5-10 - Multi-family large water heater

Question

We are building a 10-unit apartment building with a single large water heater. We do not plan to install a recirculation pump and loop. Does this meet the Prescriptive requirements?

Answer

No. Since it is unlikely that a non-recirculating system will satisfactorily supply hot water to meet the tenants' needs, either a recirculating system or individual water heaters must be installed to meet the Prescriptive requirements. There is an exception for multi-family buildings of eight units or less. using the performance approach

5.5 Water Heating System Performance Compliance

1. Energy Budget Calculation

The computer performance approach allows for the modeling of water heating system performance taking into account building floor area, climate, system type, efficiency, and fuel type. The standard design water heating budget is defined by the corresponding prescriptive requirements. The performance method allows for modeling alternative water heater and distribution system combinations. Some of these options will offer compliance credits and some result in penalties.

2. Systems Serving Single Dwelling Unit

In the case of single family buildings, any type or number of water heaters can theoretically be installed. The calculated energy use of the proposed design is compared to the standard design energy budget based on a single small storage water heater with a Standard hot water distribution system. Adding multiple water heaters to a single family design will generally result in an energy penalty in the water heating budget that must be offset elsewhere in the overall Title 24 compliance.

A standard distribution system serving a single dwelling unit does not incorporate a pump for hot water recirculation, and does not take credit for any design features eligible for energy credits. As per the prescriptive requirements, all mandatory pipe insulation requirements must be met such as all pipe lengths running to the kitchen must be insulated. Alternative distribution systems are compared to the standard design case by using distribution system multipliers (DSMs), which effectively rate alternative options.

Table 5-7 provides a listing of all the recognized distribution systems that can be used in the performance approach with their assigned distribution multiplier. For

more information or installation requirements on any of the systems refer to Section 5.3.

Table 5-7 – Applicability of Distribution Systems Options within a Dwelling Unit

Distribution System Types	Assigned Distribution System Multiplier	Systems Serving a Single Dwelling Unit	Multi-family with central recirculation systems
No HERS Inspection Required			
Trunk and Branch -Standard (STD)	1.0	Yes	Yes
Pipe Insulation (PIA)	0.9	Yes	Yes
Parallel Piping (PP)	1.05	Yes	
Insulated and Protected Pipe Below Grade (IPBG)	1.4	Yes	
Recirculation: Non-Demand Control Options (R-ND)	7.0	Yes	
Recirculation with Manual Demand Control (R-Dman)	1.15	Yes	Yes
Recirculation with Motion Sensor Demand Control (R-DAuto)	1.3	Yes	
Optional Cases: HERS Inspection Required		Yes	
Pipe Insulation (PIC-H)	0.8	Yes	*
Parallel Piping with 5' maximum length (PP-H)	0.95	Yes	
Compact Design (CHWDS-H)	0.7	Yes	
Point of Use (POU-H)	0.3	Yes	
Recirculation with Manual Demand Control (R-Drmc-H)	1.05	Yes	
Recirculation with Motion Sensor Demand Control (RDRsc-H)	1.2	Yes	
Non Compliant Installation Distribution Multiplier	1.2	Yes	Yes

Note: any system that does not meet the installation requirements listed in RA3 and RA4 for the specific system type in any way must either have the installation corrected or have the compliance run redone using the Non Compliance installation distribution multiplier.

3. Systems Serving Multiple Dwelling Units

For systems serving multiple dwelling units with a recirculating pump the standard distribution system design is based on a central recirculation system with two recirculation loops which are controlled by a demand control technology. Systems designed with other options are allowed. But they require compliance verification through performance calculation.

Table 5-8 – Applicability of Distribution Systems Options within a Dwelling Unit Applicability of Distribution Systems Options for Central Distribution Systems in Multi-family Buildings

Distribution System Type	
Demand Recirculation	Defined RA4
Demand Reciculation With HERS verification	Defined RA3
Temperature Modulation	Defined RA4
Constant Monitoring	Defined RA4
Default (Other)	Added for acm rules
Pipe Insulation	Not defined in RA3

Central recirculation systems using only one recirculation loop are expected to have larger pipe surface areas than those of dual-loop designs, according to plumbing code requirements for pipe sizing. For large buildings, it may be better to use more than one recirculation loop with each serving a small portion of the building, even though the Standard does not provide additional credit for designs with more than two recirculation loops.

If demand control is not used, temperature modulation controls and/or continuous monitoring should be used as an alternative compliance method. Recirculation timer controls are not given any control credits because field studies revealed that they are usually not properly configured to achieve the intended purposes. Buildings with uncontrolled recirculation systems will have to install other efficiency measures to meet compliance requirements through the performance method.

Systems with all pipes insulated can claim compliance credit. The amount of credit is increased if the insulation is verified by a HERS rater. Increasing recirculation pipe insulation by 0.5 inch above the mandatory requirements can also result in compliance credit through performance calculation.

5.5.1 Treatment of Water Heater Efficiency

1. Small Storage Water Heaters

Small storage gas and electric water heaters are modeled to reflect the dependency of their rated performance on the actual hot water recovery load (the estimated energy load on the water heater based on the CEC draw schedule). This “load dependent Energy Factor” relationship decreases the water heater efficiency at loads lower than the EF test level and increases it for loads exceeding the EF test level.

2. Large Storage Water Heaters

For large storage water heaters, energy use due to hot water demand and distribution loss are calculated and listed according to thermal efficiency. The total

water heater energy use is documented by also includes standby loss, which is reported either as a percentage or numeric value in Btu/hr. Both values are calculated based on a relationship of standby looses (which include thermal and electricity) compared to the total energy storage capacity of the water heaterHeat Pump Water Heaters

Heat pump water heaters are modeled based on their rated EF. In addition to recognizing the performance impact of loads on annual efficiency, the heat pump water heater model also includes a climate zone adjustment to reflect changes to heat pump efficiency with the ambient temperatures in that climate zone.

3. Instantaneous Gas Water Heaters

A PIER-sponsored evaluation of instantaneous (or tankless) gas water heaters was completed to assess whether the rated Energy Factor for these units accurately describes real world system performance. Results of the study indicate that the Energy Factor test procedure underestimates the impact of small volume hot water draws and heat exchanger cycling on annual system performance. Based on these findings, the 2008 Standards applied a 0.92 derating factor on the nominal EF of all gas instantaneous water heaters. This derating was validated by further PIER field research completed in 2011.

Instantaneous water heaters are occasionally installed with small electric storage buffer tanks downstream of the tankless unit to mitigate the potential for cold water sandwich effects. If one of these units is installed, both the buffer tank and the instantaneous water heater must be modeled. The buffer tank must be listed in the CEC Appliance Directory and the listed standby wattage is used to model the buffer tank as a separate electric point of use water heater. In cases where the buffer tank in built into the instantaneous gas water heater the wattage of heating coil in the buffer tank must be modeled in the same manner as if the buffer tank where separate.

4. Solar Water Heating Systems

Solar water heating can be used in compliance with single family or multi-family buildings. For treatment of solar water heating systems, please refer to Section 5.6.2.

5.5.2 Compliance Issues

Water heating is becoming more and more important to overall compliance as building envelope performance and mechanical efficiency improved. When the performance approach is used, a high efficiency water heater can significantly impact the overall performance margin of a building especially in the milder climates like climate zones 4 through 9, where water heating typically represents a larger fraction of the overall house energy budget.

Asking for a cut sheet on the installed equipment to verify efficiency is a simple shortcut to checking compliance. Also note that when used in a combined hydronic system it is important to check the capacity of the system to verify that both space and water heating loads can both be met

5.6 Solar Water Heating

The Water Heating Calculation Method allows water heating credits for solar water heaters. Solar systems save energy by using non-delectable resources to offset the use of conventional energy sources.

For single-family solar systems, All systems must be Solar Rating and Certification Corporation (SRCC) approved. Accepted testing procedures include either fully approved system with OG-300 test results or built up system that use the collector (OG-100) rating. For multi-family, only systems with OG-100 collectors can be installed. For more detailed instructions on installation of solar water heaters refer to RA4.4. The sortable database of SRCC-certified is located on the SRCC website[1].

Figure 5-13 summarizes the process flow for demonstrating compliance via both the prescriptive and performance compliances.

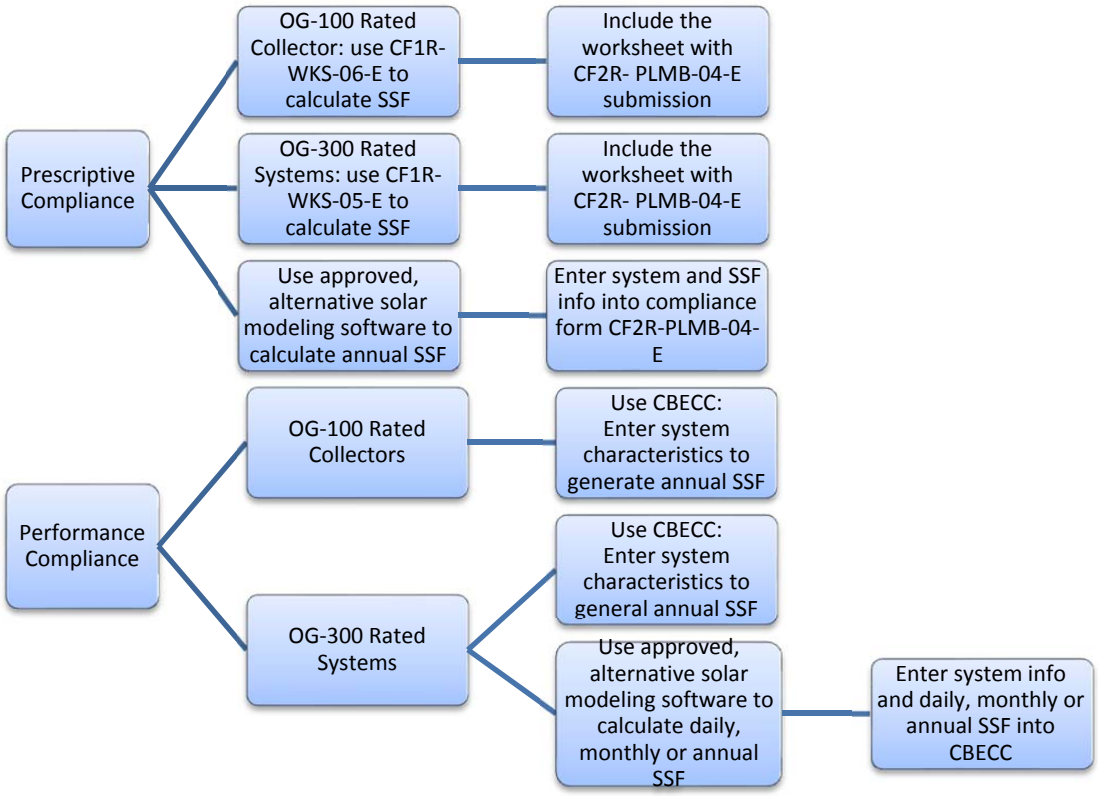

Figure 5-13 – Compliance Process for Solar Water Heating System

Under the prescriptive compliance path, to calculate SFF for OG-300 systems go to the following link.

http://www.gosolarcalifornia.org/solarwater/nshp/swh_calc_systems.php

and complete the use the compliance worksheet. To do this you will need the Solar Energy Factor (SEF) value from the SRCC website listed previoulsy. To calculate SSF for OG-100 collectors under the prescriptive compliance use the compliance tool at the following link:

[1] https://secure.solar-rating.org/Certification/Ratings/RatingsSummaryPage.aspx

http://www.gosolarcalifornia.org/solarwater/nshp/swh_calc_collectors.php

and complete the worksheet.

Regardless of the system type installed and compliance method chosen, mandatory requirements for pipe insulation and storage tank insulation apply as described earlier in this chapter in Section 0.

Mandatory Requirements

1. Solar or Recovered Energy in State Buildings

§110.3(c)6

Low-rise residential buildings constructed by the State of California shall have solar water heating systems. The solar system shall be sized and designed to provide at least 60 percent of the energy needed for service water heating from site solar energy or recovered energy. There is an exception when buildings for which the state architect determines that service water heating is economically or physical infeasible. See the Compliance Options section below for more information about solar water heating systems.

2. Solar Ready Buildings Requirements

150.0(r),110.1

There are new mandatory requirements for all buildings to be “solar ready.” The motivation behind having solar ready requirements is to encourage more future installations of both photovoltaic and solar water heating systems, even if these systems are not installed during the time of new construction. Details on these solar ready requirements are in the “Solar Ready Requirements” chapter of the compliance manual. In summary, the elements to being solar ready include:

- Designated solar zone
- Designated conduit and plumbing paths
- Documentation for solar zone and paths on construction plans, and
- Adequate electric busbar and panel capacity

5.6.1 Prescriptive Requirements

This section discusses when solar water heating is required prescriptively for systems serving single and multiple-dwelling units.

1. Single Family

Solar water heating is prescriptively required for systems serving single family dwelling units with electric water heaters. Where no natural gas is available the standards allow the use of either electric-resistance storage or instantaneous water heater systems to serve single family dwelling unitsbut only with the use of solar water heating. To use this prescriptive option all of the following requirements and conditions must be met:

a. If natural gas is unavailable to the home.
b. The water heater is located within the building envelope.
c. Recirculation pumps are not used.

d. The water heating system includes a solar water-heating system with a minimum SSF of 0.50.

In meeting the solar thermal system criteria the system or collectors must be certified by Solar Rating and Certification Corporation (SRCC) as described above in the introduction to 5.5. Either OG-100 or OG-300 systems can be installed. Installation of a solar water heating system exempts single family homes from needing to set aside solar zone for future solar PV or solar water heating installation (§110.10(b)1A).

The collector installation must also meet the installation requirements detailed in RA-4.4. These requirements specify that systems complying with the OG-300 system must be installed to the following guidelines:

a. Face within 35 degrees of due south,

b. Have a tilt slope of at least 3:12,

c. Be un-shaded by buildings or trees. See the residential appendix RA4.4 for details.

For built up systems using components and the OG-100 collector rating the collectors must be installed to match the specification entered when the solar thermal system was modeled.

For compliance with either option, you will need to print out the results and submit along with the completed compliance form.

2. Multi-family, Motel/Hotels and High-Rise Nonresidential

150.1(c)8Ciii

Solar water heating is prescriptively required for water heating systems serving multiple dwelling units, whether they are multi-family, motel/hotels or high-rise nonresidential buildings. The minimum SSF is dependent on the climate zone: 0.20 for CZ 1 through 9, and 0.35 for CZ 10 through 16. The regulations do not limit the solar water heating equipment or system type, as long as they are SRCC certified and meet the orientation, tilt and shading requirement specified in RA4.4. Installation of a solar water heating system exempts multifamily buildings from needing to set aside solar zone for future solar PV and solar water heating installation (§110.10(b)1B). The following paragraphs offer some high-level design considerations for multifamily building solar water heating systems.

A high-priority factor for solar water heating system design is component sizing. Proper sizing of the solar collectors and solar tank ensures that the system take full advantage of the sun's energy while avoiding the problem of overheating. While the issue of freeze protection has been widely explored (development of various solar water heating system types is a reflection of this evolution), the issue of overheating is often not considered as seriously as it should be, especially for climate conditions with relatively high solar insolation level such as California. This is especially critical for multifamily-sized systems, due to load variability.

The solar water heating sizing requirements for the Standards are conservative, the highest SSF requirement called for by the 2013 Title 24 at 50%. Stakeholders further suggested that industry standard sizing for an active system is 1.5 ft^2 collector area per gallon capacity for solar tank. For more detailed guidance and best practices, there are many publicly available industry design guidelines. Two such resources developed by/in association with government agencies are *Building America Best*

Practices Series: Solar Thermal and Photovoltaic Systems[2] , and *California Solar Initiative – Thermal: Program Handbook*[3].Because of the new solar water heating requirement and prevalence of recirculation hot water systems in multifamily buildings, it is essential to re-iterate the importance of proper integration between the hot water recirculation system and the solar water heating system. Industry stakeholders recommended the recirculation hot water return to be connected back to the system *downstream* of the solar storage tank. This eliminates the unnecessary wasted energy used to heat up water routed back from the recirculation loop that may have been sitting in the solar water tank if no draw has occurred over a prolonged period of time.

Another design consideration is the layout and placement of collectors and solar tank. The idea here, similar to the discussions on recirculation system design in Section 5.3.3, is to minimize the length of plumbing, thus reducing pipe surface areas susceptible to heat loss and piping materials needed. This calls for the shortest feasible distance between the collectors themselves; furthermore, since solar tanks are typically plumbed in series with, just upstream of the conventional/auxiliary water heating equipment, the distance between collectors and solar tank should also be as short as practically possible.

5.6.2 Performance Compliance

Solar water heating systems with SSF higher than the specified prescriptive minimum or required mandatory level can be used as a tradeoff under the performance approach. Figure 5-13 shows the compliance process needed for demonstrating compliance with solar water heating modeling. The new CEC compliance software integrates the capability of calculating an annual SSF. Users now input collector and system component specifications to calculate a corresponding SSF for the proposed system. The SSF along with other system parameters should be entered into compliance form which will be used to populate the certificate of compliance.

5.7 Swimming Pool and Spa Heating

5.7.1 Swimming Pool and Spa Types

The Standards now include many additional requirements for residential swimming pool filtration equipment which affect pump selection and flow rate, piping and fittings, and filter selection. These new Standards are designed to reduce the energy used to filter and maintain the clarity and sanitation of pool water.

[2] http://apps1.eere.energy.gov/buildings/publications/pdfs/building_america/41085.pdf

[3] http://www.cpuc.ca.gov/NR/rdonlyres/CB11B92E-DFFF-477B-BFA9-F1F04906F9F9/0/CSIThermal_Handbook201209.pdf

5.7.2 Mandatory Requirements

Before any pool or spa heating system or equipment may be installed, the manufacturer must certify to the Energy Commission that the system or equipment complies with §110.4 and §110.5. The requirements include minimum heating efficiency according to Appliance Efficiency Regulations, an on-off switch outside the heater, permanent and weatherproof operating instructions, no continuous pilot light, and no electric resistance heating (see exceptions below).

§110.5

Pool and spa heaters may not have continuously burning pilot lights.

§110.4

Outdoor pools and spas with gas or electric heaters shall have a cover installed. The cover should be fitted and installed during the final inspection.

There are two exceptions for electric heaters, which may be installed for:

a. Listed package units with fully insulated enclosures (e.g., hot tubs), and with tight-fitting covers, insulated to at least R-6.

b. Pools or spas getting 60 percent or more of their annual heating from site solar energy or recovered energy.

1. Pool Pump Requirements

For maximum energy efficiency, pool filtration should be operated at the lowest possible flow rate for a time period that provides sufficient water turnover for clarity and sanitation. Auxiliary pool loads that require high flow rates such as spas, pool cleaners, and water features, should be operated separately from the filtration to allow the filtration flow rate to be kept to a minimum.

§150.0(p)1

All pumps and pump motors shall comply with the specifications of the Appliance Efficiency Regulations.

The pool filtration flow rate may not be greater than the rate needed to turn over the pool water volume in 6 hours or 36 gpm, whichever is greater. This means that for pools of less than 13,000 gallons the pump must be sized to have a flow rate of less than 36 gpm and for pools of greater than 13,000 gallons, the pump must be sized using the following equation:

$$\text{Max Flow Rate (gpm)} = \frac{\text{Pool Volume (gallons)}}{360\text{min.}}$$

These are maximum flow rates. Lower flow rates and longer filtration times are encouraged and will result in added energy savings.

Pools with auxiliary pool loads must use either a multi-speed pump or a separate pump for each auxiliary pool load. For example, if a spa shares the pool filtration system, either a multi-speed pump must be used or a separate pump must be provided to operate the spa. If the pool system can be served by one pump of less than 1 total-hp in capacity, the pump may be single speed.

Filtration pump motors with a capacity of 1 total-hp or more must be multi-speed.

All pool pumps sold in California must be tested and listed with the Energy Commission according to the Appliance Efficiency Regulations. Pump manufacturers must list flow rate, power, and energy factor at each of three system curves (see Figure 5-14). For pools equal to or less than 17,000 gallons, a pump must be chosen such that the flow rate listed for Curve A is less than the 6-hour turnover rate. For pools greater than 17,000 gallons, a pump must be chosen such that the listed flow rate at Curve C is less than the 6-hour turnover rate.

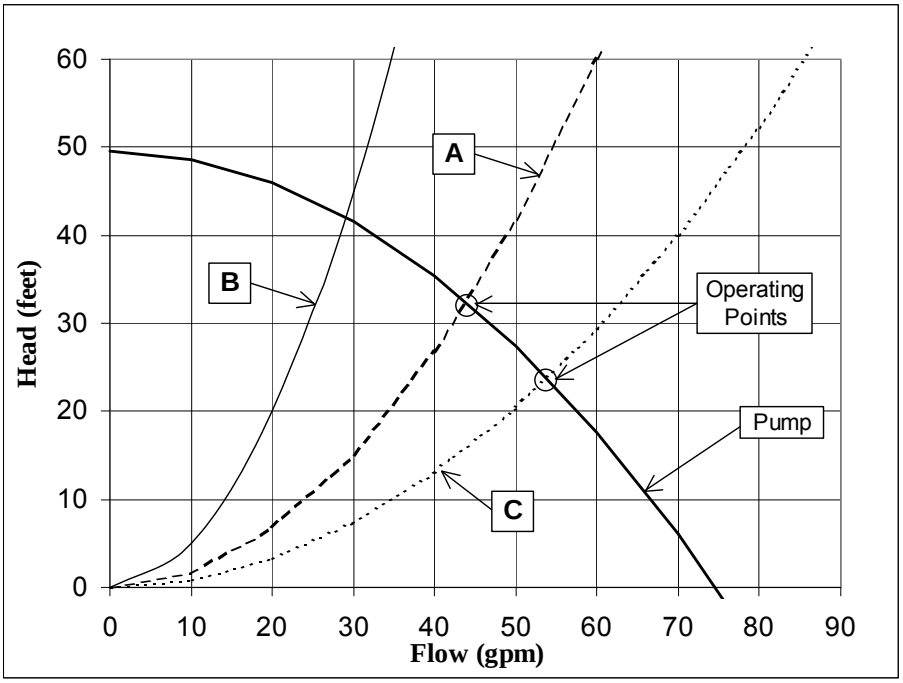

Figure 5-14 – System Test Curves

2. Pool Pump Controls

Pool controls are a critical element of energy efficient pool design. Modern pool controls allow for auxiliary loads such as cleaning systems, solar heating, and temporary water features without compromising energy savings.

§110.4(b)

A time switch or similar control mechanism must be installed as part of the pool water circulation control system that will allow all pumps to be set or programmed to run only during the off-peak electric demand period and for the minimum time necessary to maintain the water in the condition required by applicable public health standards. Solar system that requires pumps to during peak hours must also have control mechanism installed

§150.0 (p)1

Multi-speed pumps must have controls that default to the filtration flow rate when no auxiliary pool loads are operating. The controls must also default to the filtration flow rate setting within 24 hours and must have a temporary override capability for servicing.

3. Pool Pipe, Filter, and Valve Requirements

System design for residential pools was introduced in 2008. Correct sizing of piping, filters, and valves reduces overall system head, reduces noise and wear, and increases energy efficiency. Other mandatory requirements include leading straight pipe into the pump, directional inlets for mixing, and piping to allow for future solar installations.

§110.4(b) and §150(p)2

Pool piping must be sized according to the maximum flow rate needed for all auxiliary loads. The maximum velocity allowed is 8 fps in the return line and 6 fps in the suction line. Table 5-9 shows the minimum pipe sizes required by pool volume based on a 6-hour turnover filtration flow rate. These pipe sizes would need to be increased if there are auxiliary loads that operate at greater than the filtration flow rate. Conversely, they could be reduced if the pump is sized for greater than a 6-hour turnover filtration flow rate.

Table 5-9 – Hour Turnover Pipe Sizing

Pool Volume (gallons)		Minimum Pipe Diameter (in)	
Min	Max	Return	Suction
-	13,000	1.5	1.5
13,000	17,000	1.5	2
17,000	21,000	2	2
21,000	30,000	2	2.5
30,000	42,000	2.5	3
42,000	48,000	3	3
48,000	65,000	3	3.5

There must be a length of straight pipe that is greater than or equal to at least 4 inches pipe diameters installed before the pump. That is, for a 2 inch suction pump, there must be at least 8 inches of straight pipe before the pump's strainer basket.

Traditional hard 90° elbows are not allowed. All elbows must be sweep elbows or a type of elbow that has a pressure drop less than the pressure drop of straight pipe with a length of 30 pipe diameters. For example, a 2 inch elbow must have a pressure drop less than a 5-foot length of 2 inch straight pipe.

Field verification of sweep elbows may be performed by checking that the distance "w" of the installed sweep elbow is greater than that for a hard 90 elbow (refer to Figure 5-15). The difference in measurement between the radial edge of one sleeve to the perpendicular side of the elbow is found to be distinct between sweep elbows and hard 90's. There is sufficient difference in distance "w" such that all sweep elbows exceed the minimum values listed in Table 5-10.

Figure 5-15 below illustrates "w" the dimension between the elbow sleeves and Table 5-10 shows the minimum distances "w" for an acceptable sweep elbow.

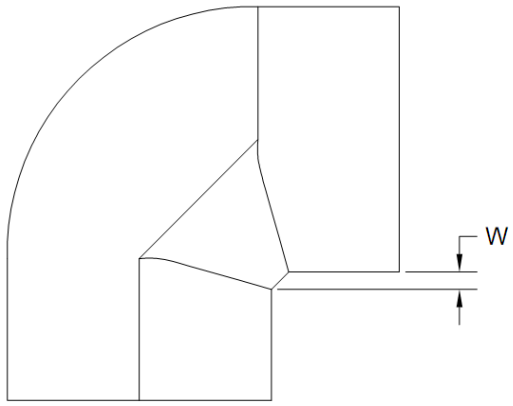

Figure 5-15 – Measuring "w" at the Pool Site.

Table 5-10 – Pool Site Measurement for Sweep Elbows

Pipe Diameter	Minimum W (inch)
1.5	3/8
2	1/2
2.5	5/8
3	3/4
4	1

Filters shall be sized using NSF/ANSI 50 based on the maximum flow rate through the filter. The filter factors that must be used are (in ft²/gpm):

Cartridge	0.375
Sand	15
Diatomaceous Earth	2

Backwash valves must be sized to the diameter of the return pipe or two inches, whichever is greater. Multiport backwash valves have a high pressure drop and are discouraged. Low-loss slide and multiple 3-way valves can provide significant savings.

The pool must have directional inlets to adequately mix the pool water.

If a pool does not currently use solar water heating, piping must be installed to accommodate any future installation. Contractors can choose three options to allow for the future addition of solar heating equipment:

1. Provide at least 36 inches of pipe between the filter and the heater to allow for the future addition of solar heating equipment.
2. Plumb separate suction and return lines to the pool dedicated to future solar heating.

3. Install built-up or built-in connections for future piping to solar water heating. An example of this would be a capped off tee fitting.

Example 5-11 - Pool cover

Question

My pool has both a solar heater and a gas heater. Do I need to install a pool cover?

Answer

Yes. A cover is required for all pools with gas or electric heaters, regardless of whether they also have a solar heater.

Example 5-12 - Pool pump

Question

I have a 25,000 gallon pool and want to use a two-speed pump with a Curve C flow rate of 79 gpm on high-speed and 39 gpm on low-speed. Is this okay and what size piping must I installed?

Answer

The maximum filtration flow rate for a 25,000 gallon pool is 69 gpm by using equation [Max Flow Rate (gpm) =Pool Volume (gallons) / 360 minutes], so the pump is adequately sized, as long as a control is installed to operate the pump on low-speed for filtration. The maximum pipe size must be based on the maximum flow rate of 79 gpm. Referencing Table 5-9, you must use 2.5 inch suction and 2 inch return piping.

5.8 Combined Hydronic System

5.8.1 Combined Hydronic

Combined hydronic space heating systems utilize a single heat source to provide both space heating and domestic hot water. The current modeling of these system types is fairly simplistic, treating water heating performance separately from the space heating function. Section 4.7.1 provides an explanation of combined hydronic systems.

5.9 Shower Heads

5.9.1 Certification of Showerheads and Faucets

§110.3(c)7

Maximum flow rates have historically been set by the Appliance Efficiency Regulations, and all faucets and showerheads sold in California must meet these standards. The appliance regulations set limits for showerheads at 2.5 gallons per minute (gpm) at 80 psi water pressure. The limit for lavatory faucets and kitchen faucets is 2.2 gpm at 60 psi. Current flow requirements contained in the CalGreen

Code set more efficiency levels. Installations of showerheads and faucets are mandatory under the CalGreen Code and must be met.

5.10 Compliance and Enforcement

Chapter 2 addresses the compliance and enforcement process in a general manner and discusses the roles and responsibilities of each of the major parties, the compliance forms, and the process for field verification and/or diagnostic testing. This section highlights compliance enforcement issues for water heating systems.

5.10.1 Design Review

The initial compliance documentation consists of the Certificate of Compliance and Installation Certificate. These documents are included on the plans and specifications. The Certificate of Compliance has a section where special features are listed. The following are water heating features that should be listed in this section of the Certificate of Compliance:

1. Any system type other than one water heater per dwelling unit
2. Non-NAECA large water heater performance
3. Indirect water heater performance
4. Instantaneous gas water heater performance
5. Distribution system type and controls
6. Solar system
7. Combined hydronic system

If any of these measures are called out on the Certificate of Compliance special attention should be given to make sure that identical information in located on the plan set. Highlighting key concerns or adding notes will allow field inspectors to quickly catch any measures that should be installed that made a significant difference in compliance.

5.10.2 Field Inspection

During the construction process, the contractor and/or the specialty contractors complete the necessary sections of the Installation Certificate. For water heating there is only one section to be completed where information about the installed water heating system is entered.

Inspectors should check that the number and types of water heater systems indicated on the installation certificate, corresponds to the approved Certificate of Compliance. The distribution system is also significant and must correspond to plan specifications.

5.10.3 Field Verification and/or Diagnostic Testing

1. Single Family

HERS verification is required for all hot water distribution types that include options for field verification. The first type is alternative designs to conventional distribution systems which include parallel piping, demand recirculation, automatic and manual on demand recirculation. The second type is for distribution systems that can only be used when verified by field verification. These include, compact design, and point of use. For all of these cases the field inspector must verify that the eligibility requirements for the specific system are met.

The one water heating system distribution credit that is different is the pipe insulation credit. This credit applies if all pipes in a distribution system are insulated and can only be applied to non recirculating systems. If this credit is taken in combination with installation credit then field verification is required. To meet the installation requirements hot water pipes located in insulated walls or buried in the attic insulation comply with the requirements – without pipe insulation. In this case, a field inspector must verify that the eligibility requirements for pipe insulation have been met.

2. Multi-family

The only field inspector verification for water heating that applies to central domestic hot water recirculation systems in multi-family buildings is the verification of multiple distribution lines for central recirculation systems.

5.11 Glossary/Reference

Relevant terms are defined in Reference Joint Appendix JA1.

The following are terms that are either not defined in JA1 or expansions to the Appendix I definitions.

Energy Factor (EF) of a water heater is a measure of overall water heater efficiency for most residential water heaters, as determined using the applicable test method in the Appliance Efficiency Regulations. Typical gas storage water heaters have typical EFs of about 0.60-0.70, electric storage water heaters approximately 0.90, and gas instantaneous units approximately 0.80-0.94.

External tank insulation can be applied to the exterior of storage type water heater tanks. When installed, water heater insulation should be applied to completely cover the exterior of the water heater, but should not conceal controls or access ports to burners, obstruct combustion air openings, or interfere in any way with safe water heater operation. Insulation of top and bottom surfaces is not necessary.

Recovery energy is the energy used to heat water.

Recovery load is the load on the water heater due to hot water end uses and distribution losses.

Thermal efficiency is defined in the Appliance Efficiency Regulations as a measure of the percentage of heat from the combustion of gas or oil that is transferred to the hot water as determined using the applicable test methods.

Swimming Pool and Spa

Flow Rate is the volume of water flowing through the filtration system in a given time, usually measured in gallons per minute.

Nameplate Power is the motor horsepower (hp) listed on the nameplate and the horsepower by which a pump is typically sold.

Pool Pumps usually come with a leaf strainer before the impeller. The pumps contain an impeller to accelerate the water through the housing. The motors for residential us pumps are included in the pump purchase but can be replaced separately. The pumps increase the “head” and “flow” of the water. Head is necessary to move fluid through pipes, drains, and inlets, push water through filters and heaters, and project it through fountains and jets. Flow is the movement of the water used to maintain efficient filtering, heating, and sanitation for the pool.

Return refers to the water in the filtration system returning to the pool. The return lines or return side, relative to the pump, can also be defined as the pressure lines or the pressure side of the pump. Water in the returns is delivered back to the pool at the pool inlets.

Service Factor. The service factor rating indicates the percent above nameplate horsepower at which a pump motor may operate continuously when full rated voltage is applied and ambient temperature does not exceed the motor rating. Full-rated pool motor service factors can be as high as 1.65. A 1.5 hp pump with a 1.65 service factor produces 2.475 hp (total hp) at the maximum service factor point.

Suction created by the pump is how the pool water gets from the skimmers and drains to the filtration system. The suction side and suction lines refer to the vacuum side of the pump. It is at negative atmospheric pressure relative to the pool surface.

Total Dynamic Head (TDH) refers to the sum of all the friction losses and pressure drops in the filtration system from the pools drains and skimmers to the returns. It is a measure of the system's total pressure drop and is given in units of either psi or feet of water column (sometimes referred to as "feet" or "feet of head").

Total Motor Power or T-hp, refers to the product of the nameplate power and the service factor of a motor used on a pool pump.

Turnover is the act of filtering one volume of the pool.

Turnover Time (also called Turnover Rate) is the time required to circulate the entire volume of water in the pool or spa through the filter. For example, a turnover time of 6-hours means an entire volume of water equal to that of the pool will be passed through a filter system in six hours.

$$\text{Turnover Time} = \frac{\text{Volume of the pool}}{\text{Flow rate}}$$

6. Residential Lighting

6.1 Overview

This chapter is a one-stop place where a building department, builder, contractor, or lighting designer can get the information they need about residential lighting in low-rise buildings and in the dwelling units of high-rise buildings.

For residential buildings, all of the lighting requirements are mandatory measures. Therefore, lighting energy is not part of the energy budget for the whole building performance method, except as part of the standard assumption on internal heat gains that is assumed to be the same for all buildings. There are no tradeoffs between lighting and other building features.

6.1.1 Scope

A. Low-Rise Residential Buildings

The residential lighting requirements apply to both indoor and outdoor lighting, in low-rise residential single-family buildings, and low-rise multi-family buildings.

The residential lighting requirements also apply to some spaces in buildings classified as nonresidential, as explained below in section 6.1.1 B of this chapter.

A low-rise residential building is defined in §100.1(b) of the Standards as a building, other than a hotel/motel, that is an Occupancy Group that is one of the following:

- R-2, multi-family, with three stories or less; or
- R-3, single family; or
- U-building, located on a residential site.

B. Residential Space Types in Nonresidential Building

The design and installation of all lighting systems, lighting controls and equipment in the following space types shall comply with the applicable provisions of the residential lighting requirements for newly constructed buildings and additions in §150.0(k), and the provisions of the residential lighting requirements for alterations in §150.2(b).

The residential lighting requirements apply to the following space types, as defined in §100.1(b) of the Standards:

1. Dwelling units in high-rise residential buildings

2. Outdoor lighting that is attached to a high-rise residential or hotel/motel building, and is separately controlled from the inside of a dwelling unit or guest room.
3. Fire station dwelling accommodations.
4. Hotel and motel guest rooms. Additionally, hotel and motel guest rooms shall meet the requirements of §130.1(c)8.

   Following are the requirements for hotel and motel guest rooms in §130.1(c)8 of the Standards:

   - Hotel motel guest rooms shall have captive card key controls, occupancy sensing controls, or automatic controls such that, no longer than 30 minutes after the guest room has been vacated, lighting power is switched off.

     EXCEPTION: One high efficacy luminaire as defined in TABLE 150.0-A or 150.0-B that is switched separately and where the switch is located within 6 feet of the entry door.
5. Dormitory and senior housing dwelling accommodations.

C. Nonresidential Buildings

The space types specifically listed is section B above are in buildings which are classified as nonresidential. All of the other space types in these nonresidential buildings are required to comply with the applicable nonresidential lighting Standards.

Typical nonresidential space types, required to comply with the applicable nonresidential lighting Standards include meeting rooms, corridors, public restrooms, stairs, support areas, exercise centers, hotel function areas, lobbies, lounge areas, offices, parking garages, and all other common areas.

Following are some relevant definitions from §100.1(b) of the Standards:

1. High-rise residential building is a building, other than a hotel/motel, of Occupancy Group R-2 or R-4 with four or more habitable stories.
2. Hotel/Motel is a building or buildings that has six or more guest rooms or a lobby serving six or more guest rooms, where the guest rooms are intended or designed to be used, or which are used, rented, or hired out to be occupied, or which are occupied for sleeping purposes by guests, and all conditioned spaces within the same building envelope.

   Hotel/motel also includes all conditioned spaces which are

   a. On the same property as the hotel/motel,
   b. Served by the same central heating, ventilation, and air-conditioning system as the hotel/motel, and
   c. Integrally related to the functioning of the hotel/motel as such, including, but not limited to, exhibition facilities, meeting and conference facilities, food service facilities, lobbies, and laundries.
3. Nonresidential building is any building which is identified in the California Building Code Table; Description of Occupancy as Group A, B, E, F, H, M,

or S; and is a U; as defined by Part 2 of Title 24 of the California Code of Regulation.

D. Existing Construction

"Additions" are treated the same as newly constructed buildings, so they must meet the applicable residential lighting requirements of §150.0(k).

In "alterations", existing luminaires may stay in place, but all new luminaires that are permanently installed shall meet the applicable requirements of §150.0(k).

E. Permanently Installed Lighting

The residential lighting Standards apply only to permanently installed luminaires, i.e., luminaires that are attached to the house, as opposed to portable luminaires such as torchieres or table lamps.

Permanently installed luminaires include ceiling luminaires, chandeliers, vanity lamps, wall sconces, under-cabinet luminaires, and any other type of luminaire that is attached to the house. Permanently installed luminaires may include hard wired or plug-in luminaires.

- Permanently Installed lighting is defined as lighting that consists of luminaires that are affixed to land, within the meaning of Civil Code §658 and §660, except as provided below.
- Permanently installed luminaires may be mounted inside or outside of a building or site.
- Permanently installed luminaires may have either plug-in or hardwired connections for electric power.
- Examples of permanently installed lighting include track and flexible lighting systems; lighting attached to walls, ceilings, columns, inside or outside of permanently installed cabinets, internally illuminated cabinets, mounted on poles, in trees, or in the ground; attached to ceiling fans and integral to exhaust fans.
- Permanently installed lighting does not include portable lighting or lighting that is installed by the manufacturer in exhaust hoods for cooking equipment, refrigerated cases, food preparation equipment, and scientific and industrial equipment.
- Portable lighting is table and freestanding floor lamps with plug-in connections. Luminaires that are attached to the bottom of a kitchen cabinet are classified as permanent, even when they have plug-in connections.

See section 6.3.1 of this chapter for additional information about permanently installed luminaires.

F. Outdoor Lighting

Some residential outdoor lighting is subject to the residential lighting requirements, and some residential outdoor lighting is subject to the nonresidential requirements, as described in section 6.7 of this chapter.

For single-family residences, all lighting attached to the residence or to other buildings on the same lot must be high efficacy, or controlled by a motion sensor and either a photocell or an astronomical time clock. The same requirements apply to the outdoor lighting of low-rise multifamily buildings with certain exceptions, and to the outdoor lighting on private patios of high-rise multifamily when the lighting is controlled from inside each individual dwelling unit.

Outdoor residential lighting is sometimes subject to the residential lighting requirements, and sometimes subject to the nonresidential lighting requirements. To help clarify the distinction, **Error! Not a valid bookmark self-reference.**6-10 shows which requirements apply to various types of outdoor lighting for each building type.

6-10 in Section **Error! Reference source not found.** shows which requirements apply to various types of outdoor lighting for each building type.

G. Signs

Internally illuminated address signs shall consume no more than 5 watts of power (watts shall be determined according to §130.0(c)), or shall comply with the applicable nonresidential sign lighting requirements in §140.8 of the Standards

See section 6.7.4 of this chapter for additional information about signs on residential buildings.

6.1.2 Summary of Requirements by Space Type

For each room or area, the lighting requirements may be summarized as follows:

A. Kitchens

At least half the installed wattage of luminaires in kitchens shall be high efficacy. However, lighting installed inside cabinets may not be required to be included in the wattage calculation that determines whether half of the installed wattage is high efficacy.

See section 0 of this chapter for information about residential kitchen lighting requirements.

B. Bathrooms

At least one luminaire in each bathroom must be high efficacy. All other luminaires in a bathroom must be either high efficacy, or controlled by vacancy sensors.

See section 6.6.2 of this chapter for information about residential lighting requirements in bathrooms.

C. Garages, Laundry Rooms, and Utility Rooms

All luminaires must be high efficacy, and must be controlled by a vacancy sensor.

See section 6.6.3 of this chapter for information about residential lighting requirements in these rooms.

D. Other Rooms

This classification applies only to rooms that are not kitchens, bathrooms, garages, laundry rooms, closets, or utility rooms. All installed luminaires shall either be high efficacy or shall be controlled by a vacancy sensor or dimmer. Closets that are less than 70 ft² are exempt from this requirement.

See section 6.6.4 of this chapter for information about residential lighting requirements in these rooms.

E. Outdoor Lighting – Single Family

In single-family residences, all luminaires mounted to the building (or to other buildings on the same lot) shall be high efficacy luminaires, or shall be controlled by a motion sensor and also by a photocontrol, astronomical time clock, or energy management control system (EMCS).

See section 6.7.1 of this chapter for information about residential outdoor lighting requirements for single-family residences.

F. Outdoor Lighting – Multifamily

Outdoor lighting for multifamily buildings is sometimes subject to the nonresidential outdoor lighting requirements.

See sections 6.7.2 and 6.7.3 of this chapter for information about residential outdoor lighting requirements for multi-family buildings.

G. Interior Common Areas of Multifamily Buildings

For high-rise multifamily buildings, the lighting of common areas shall comply with the nonresidential lighting requirements.

For low-rise multifamily buildings, if the total interior common area of the building equals 20% or less of the floor area, common area lighting shall be high efficacy or controlled by an occupant sensor. If the total interior common area of the building equals more than 20% of the floor area, common area lighting shall meet the nonresidential lighting requirements.

See section 6.8 of this chapter for information about residential lighting requirements for interior common areas of multifamily buildings.

H. Parking Lots

The nonresidential outdoor lighting Standards apply to residential parking lots or garages with space for eight or more cars, which are typically for multifamily buildings. The Nonresidential Lighting Standards for parking lots and/or garages apply in these cases (§130.2, §140.7). See section 6.7.7 for additional information about lighting Standards for residential parking lots or residential garages with space for eight or more cars.

See section 6.7.7 of this chapter for information about lighting in residential parking lots.

6.1.3 Residential Luminaire Requirements

Residential luminaires are classified as being either “high efficacy” or “low efficacy” for the purpose of compliance, according to the requirements described in Section 6.3.2 and 6.3.3.

The residential lighting Standards have requirements for electronic ballasts (section 6.3.8), permanently installed night lights (section 6.3.9), lighting integral to exhaust fans (section 6.3.11), and lighting switching requirements (sections 6.5 and 6.6 of this chapter).

Luminaires that are recessed into ceilings shall have airtight housings to prevent conditioned air escaping into the ceiling cavity or attic, or unconditioned air infiltrating from the ceiling or attic into the conditioned space.

Luminaires that are recessed into insulated ceilings are required to be rated for insulation contact (“IC-rated”) so that insulation can be placed over them. See sections 6.3.9; 6.3.12; and 6.3.13 of this chapter for additional information about luminaires recessed into insulated ceilings.

6.1.4 Related Documents

There are a number of publications and documents available from the California Energy Commission and others that provide additional information about residential lighting. A summary of these is listed below:

A. The Nonresidential Compliance Manual should be consulted for more details on the requirements for parking lots and parking garages.

   The Residential Lighting Design Guide, (Best practices and lighting designs to help buildings comply with California’s Title 24 energy code) is available from the California Lighting Technology Center (www.CLTC.ucdavis.edu).

B. The Advanced Lighting Guidelines, available from the New Buildings Institute (www.newbuildings.org) is an informative resource for energy efficient lighting design, luminaires, and controls. While the document is mostly oriented for nonresidential lighting applications, it has generic information about lamps, ballasts, luminaires, and controls that is applicable to low-rise residential buildings.

C. Professionally qualified lighting designers can be quickly located via the websites of the International Association of Lighting Designers (www.iald.org/index), or the National Council on Qualifications for the Lighting Professions (NCQLP): www.ncqlp.org). Many designers are ready to offer informal advice as well as undertake commissioned work.

D. Many books on residential lighting design are available. The best books explain the principles of good lighting design as well as showing examples of luminaires. The fast pace of lamp development makes recently written books much more useful.

E. Guidance on the selection and use of lighting technologies is available from the Lighting Research Center’s National Lighting Product Information

Program, at www.lrc.rpi.edu/programs/nlpip. Additional resources for energy efficient lighting and other building systems are available from the California Building Industry Institute at www.thebii.org.

6.2 Certification to the Energy Commission

§100(k); §110; §119

Certification to the Energy Commission is completed by manufacturers of regulated devices. Certification includes a declaration of compliance, executed under penalty of perjury of the laws of California, that the regulated device meets the requirements of the Standards.

A. For compliance with the Title 20 Appliance Efficiency Regulations and the Title 24 Building Energy Efficiency Standards, the Energy Commission maintains a database of appliances, controls, and other devices which have been certified to the Energy Commission.

B. For compliance with the residential lighting Standards, this database includes lighting controls, ballasts for residential recessed luminaires, and high efficacy LED lighting systems.

C. Lighting controls, and ballasts for residential recessed luminaires are two of the devices which shall not be installed unless they have been certified by the manufacturer and listed on this database.

D. LED lighting systems cannot be counted as “high efficacy” for the purposes of code compliance unless that have been certified and listed on the database. The database and certification instructions are available from the following web links:

   /www.energy.ca.gov/appliances/database/index.html

   www.energy.ca.gov/appliances/forms/

E. Building departments, builders, contractors, and lighting designers should check to database to verify that a regulated device has been certified to the Energy Commission by the manufacturer of that device.

6.2.1 Self-Contained Lighting Controls

Self-contained lighting controls are required to be certified to the Energy Commission by the manufacturer.

A. A self-contained lighting control is defined as a unitary lighting control module that requires no additional components to be a fully functional lighting control.

B. Self-contained lighting control devices cannot be sold or offered for sale in California unless they have been certified to the Energy Commission according to the Title 20 Appliance Efficiency Regulations.

Figure 6-1 – Self-Contained Lighting Controls

6.2.2 Lighting Control Systems

A. A lighting control system is defined by the Standards as requiring two or more components to be installed in the building to provide all of the functionality required to make up a fully functional and compliant lighting control. Therefore, a lighting control system must functionally meet all applicable requirements in the Standards.

B. Lighting control systems are not required to be certified to the Energy Commission, but are required to comply with the minimum performance requirements in §110.9, and a Certificate of Installation must be signed in accordance with the requirements in §130.4.

   1. The minimum performance requirements in §110.9 of the Standards requires that a lighting control system functionally meet all of the requirements that a self-contained lighting control is required to meet. For example, a vacancy sensor system must functionally meet all of the requirements in the Title 20 Appliance Efficiency Regulations for a self-contained vacancy sensor.

   2. A single lighting control system that is installed to provide the functionality of more than one lighting control device is required to provide all of the functionality of each respective lighting control for which it is installed.

   3. Whenever a lighting control system is installed to comply with lighting control requirements in Title 24, a licensee of record must fill out and sign an Certificate of Installation in accordance with the requirements in §130.4. If the Certificate of Installation is not submitted, the lighting control system shall not be recognized for compliance with the Standards.

C. Specific types of lighting control systems must also meet the following requirements:

   1. An Energy Management Control System (EMCS) may be used to comply with dimmer requirements if at a minimum it provides the functionality of a dimmer, and a Certificate of Installation is signed.

   2. An Energy Management Control System (EMCS) may be used to comply with vacancy sensor requirements if at a minimum it provides the functionality of a vacancy sensor, and a Certificate of Installation is signed.

3. A multi-scene programmable controller may be used to comply with dimmer requirements if at a minimum it provides the functionality of a dimmer.
4. Lighting controls and equipment are required to be installed in accordance with the manufacturer's instructions.

6.2.3 Qualifying LED as High Efficacy

For a light emitting diode (LED) lighting system to qualify as high efficacy for compliance with the residential lighting Standards, an LED luminaire, or LED light engine shall be certified to the Energy Commission by the manufacturer as meeting all of the following conditions:

1. Shall meet the minimum efficacy requirements in Table 150.0-B (explained in sections 6.3.2 and 6.3.3 of this chapter)The LED lighting system shall be tested by an independent testing lab, according to IES LM-79-08.

For calculating kitchen lighting loads, input power shall be determined as specified by §130.0(c)9 (explained in section 6.4 of this chapter).

See section 6.3.7; 6.4.6; and 6.9 of this chapter for additional information about residential LED lighting requirements.

6.2.4 Ballasts for Compact Fluorescent Luminaires

All ballasts for compact fluorescent luminaires, when used in residential recessed luminaires, shall be certified by the manufacturer to the Energy Commission according to §110.9(f), as meeting the following conditions:

1. Be rated by the ballast manufacturer to have a minimum rated life of 30,000 hours when operated at or below a specified maximum case temperature. This maximum ballast case temperature specified by the ballast manufacturer shall not be exceeded when tested in accordance to UL 1598 §19.15; and
2. Have a ballast factor of not less than 0.90 for non-dimming ballasts and a ballast factor of not less than 0.85 for dimming ballasts.

6.3 Requirements for Residential Luminaires

A luminaire is the lighting industry's term for light fixture. A luminaire consists of the housing, power supply (for instance a ballast, transformer, or driver), lamp, and optical components such as reflectors or lenses. A lamp is the lighting industry's term for a light bulb.

Although portable table and floor lamps are classified as luminaires, they are not covered by the Title 24 residential lighting Standards. However, portable luminaires are required to comply with the California Title 20 Appliance Efficiency Regulations.

Every installed luminaire shall be classified as either "high efficacy" or "low efficacy" for compliance with the residential lighting Standards. There are different requirements for high and low-efficacy luminaires. The rules for classifying a luminaire as high efficacy are explained further in sections 6.3.2 and 6.3.3 of this chapter.

6.3.1 Permanently Installed vs. Portable Luminaires

The residential lighting Standards require that all permanently installed luminaires be high efficacy as defined in §150.0(k)1, with some exceptions described in section 6.6 of this chapter. The residential lighting Standards do not apply to portable luminaires.

A. Permanently installed luminaires include all luminaires attached to the inside or outside of a building or other structures on the same site. Permanently installed luminaires may have either plug-in or hardwired connections for electric power. This includes plug-in under-cabinet lighting where the luminaires are attached to the bottom of the cabinets.

B. The definition of permanently installed lighting in §100.1 includes outdoor lighting mounted on poles, in trees, or in the ground. However, because outdoor lighting mounted on poles, in trees, or in the ground is not regulated by the residential lighting Standards, this portion of the definition applies only to nonresidential outdoor lighting applications.

   1. Permanently installed lighting includes the following:

      a. Lighting attached to walls, ceilings, columns.

      b. Track and flexible lighting systems.

      c. Lighting inside permanently installed cabinets.

      d. Lighting attached to the top or bottom of permanently installed cabinets.

      e. Lighting attached to ceiling fans.

      f. Lighting integral to exhaust fans.

      g. Lighting that is integral to garage door openers if it is designed to be used as general lighting, is switched independently from the

garage door opener, and does not automatically turn off after a pre-determined amount of time.

2. Permanently installed lighting does not include the following:
   a. Portable lighting as defined by §100.1 (table and freestanding floor lamps with plug-in connections).
   b. Lighting installed by the manufacturer in refrigerators, stoves, microwave ovens, exhaust hoods for cooking equipment, refrigerated cases, vending machines, food preparation equipment, and scientific and industrial equipment.
   c. Lighting in garage door openers which consists of no more than two screw-based sockets integrated into the garage door opener by the manufacturer, where the lights automatically turn on when the garage door is activated, and automatically turn off after a pre-determined amount of time.

C. Portable lighting, for residential applications, is defined as lighting with plug-in connections for electric power that is table and freestanding floor lamps. However, plug-in lighting attached to the bottom of a cabinet is considered permanently installed lighting.

6.3.2 Residential High Efficacy Luminaires

§150.0(k)1

A high efficacy luminaire is one that meets the criteria listed in Table 1-1, or if the lighting technology is not covered in Table 1-1, qualifies as high efficacy in accordance with Table 1-2.

To determine whether a luminaire is classified as high efficacy or low efficacy, first refer to Error! Reference source not found.. If the luminaire is not listed in either of the two columns in Table 1-1, then use Table 1-2 to determine whether it qualifies as high efficacy.

When required to calculate efficacy according to Table 1-2, simply divide the initial rated lumens of the lamp by the rated wattage of the lamp. Lamp lumens can typically be found on the lamp package or in a manufacturer's catalogue

6.3.3 Residential Low Efficacy Luminaires

§150.0(k)2

A. A low efficacy luminaire is one that meets the criteria listed in Table 1-1. If a luminaire consists of a lighting technology that is not specifically covered by Table 1-1, it shall be classified as low efficacy if it does not meet the minimum efficacy requirements in Table 1-2.

B. Typical examples of low efficacy luminaires include:

1. LED lighting which has not been certified to the Energy Commission as high efficacy.
2. Line-voltage socket or lamp holders, except for GU-24. These include conventional medium screw-base sockets, candelabra sockets, pin-based sockets, or any other type of line-voltage lamp holders capable of accepting any type of incandescent lamp, or any other type of low efficacy lamp.
3. Low voltage incandescent lighting.
4. Track lighting of any type, or any other lighting systems which allows the addition or relocation of luminaires without altering the wiring of the system.
5. Lighting systems which have modular components that allow conversion between screw-based and pin-based sockets without changing the luminaires' housing or wiring.

C. Unfinished electrical boxes are also classified as low efficacy luminaires. This applies to electrical boxes that are finished with a blank cover, or electrical boxes where no electrical equipment has been installed, where the electrical box can be used for a luminaire or a surface mounted ceiling fan.

D. LED luminaires that have not been certified to the Energy Commission in accordance with the requirements in Reference Appendix JA-8, are classified as low efficacy, even if they meet the efficacy requirements of Table 1-2.

E. See section 6.9 of this chapter for additional information about qualifying LED as high efficacy lighting.

F. Any luminaire that contains a socket that can be fitted with an incandescent lamp is classified as low efficacy, even if a compact fluorescent or LED lamp is installed into that socket.

G. The Standards do not recognize any socket adaptors as permanent, even when classified as permanent by the manufacturer.

Table 6-1 – (Table 150.0-A in the Standards) Efficacy Classification of Common Light Sources

High Efficacy Light Sources Luminaires manufactured, designed and rated for use with only lighting technologies in this column shall be classified as high efficacy:	**Low Efficacy Light Sources** Luminaires manufactured, designed or rated for use with any of the lighting technologies in this column shall be classified as low efficacy.
• Pin-based linear fluorescent lamps or pin-based compact fluorescent lamps, provided that the ballast in the luminaire is electronic. Compact fluorescent lamps ≥ 13 watts have 4 pins for compliance with the electronic ballast requirements in §150.0(k)1D. • Pulse-start metal halide lamps. • High pressure sodium lamps. • GU-24 sockets rated for LED lamps. • GU-24 sockets rated for compact fluorescent lamps. • Luminaires using LED light sources which have been certified to the Commission as high efficacy in accordance with Reference Joint Appendix JA8. • Luminaire housings rated by the manufacturer for use with only LED light engines. • Induction lamps. Note: Adaptors which convert an incandescent lamp holder to a high-efficacy lamp holder shall not be used to classify a luminaire as high efficacy, even if the manufacturer declares that such adaptors as permanent.	• Line-voltage lamp holders (sockets) capable of operating incandescent lamps of any type. • Low-voltage lamp holders capable of operating incandescent lamps of any type. • High efficacy lamps installed in low-efficacy luminaires, including screw base compact fluorescent and screw base LED lamps. • Mercury vapor lamps. • Track lighting or other flexible lighting system which allows the addition or relocation of luminaires without altering the wiring of the system. • Luminaires using LED light sources which have not been certified to the Commission as high efficacy. • Lighting systems which have modular components that allow conversion between high-efficacy and low-efficacy lighting without changing the luminaires' housing or wiring. • Electrical boxes finished with a blank cover or where no electrical equipment has been installed, and where the electrical box can be used for a luminaire or a surface mounted ceiling fan.

Table 6-2 – (Table 150.0-B in the Standards) Efficacy Classification of Uncommon Light Sources

Use this table to determine luminaire efficacy and classification only for lighting systems not listed in TABLE 150.0-A	
Luminaire Power Rating	**Minimum Luminaire Efficacy to Qualify as High Efficacy**
5 watts or less	30 lumens per watt
over 5 watts to 15 watts	45 lumens per watt
over 15 watts to 40 watts	60 lumens per watt
over 40 watts	90 lumens per watt
Note: Determine minimum luminaire efficacy using the system initial rated lumens divided by the luminaire total rated system input power.	

6.3.4 Residential Hybrid LED Luminaires

Some luminaires contain both LEDs and other light sources. These are known as hybrid LED luminaires. When the LED source has been certified to the Energy Commission as high efficacy, and the other light source in the hybrid luminaire also qualifies as high efficacy according to **Error! Reference source not found.** or **Error! Reference source not found.** of this chapter, the entire luminaire may be classified as high efficacy for compliance with the residential lighting Standards.

However, when a certified high efficacy LED source system is combined with a low efficacy lighting system in a Hybrid LED Luminaire, the high efficacy and low efficacy lighting systems shall each separately comply with the applicable requirements of §150.0(k). This means that the specific requirements of each residential room type apply to the high efficacy and low efficacy parts of the luminaire respectively.

6.3.5 GU-24 Luminaires

Luminaires with GU-24 sockets which are rated for use with only LED lamps, fluorescent lamps, or high intensity discharge lamps, are automatically classified as high efficacy for residential use, and are a cost-effective way of installing high efficacy lighting.

Luminaires with GU-24 sockets sold or offered for sale in California shall accept only high efficacy lamps, and GU-24 lamps shall only be high efficacy, according to the Title 20 Appliance Efficiency Regulations. The shape and size of the GU-24 socket enables it to be manufactured into any luminaire that could use an Edison Screw socket. This means that many residential luminaire manufacturers offer GU-24 sockets as an option in all their screw-based luminaires, making it possible for all these luminaires to be classified as high-efficacy without incurring additional cost.

Compact fluorescent lamps and LED lamps are available with GU-24 bases, as shown in Figure 6-36-3. Note that the Edison-base-to-GU-24 socket adaptor shown on the right side of Figure 6-3 shall never be recognized for compliance with the residential lighting Standards. However, California law does not prohibit the installation of such adaptors in previously installed luminaires, provided that such luminaires are not used to comply with Title 24.

Under the California Title 20 Appliance Efficiency Regulations, it is illegal to sell or offer for sale an incandescent lamp with a GU-24 base, a luminaire with a GU-24 socket that is rated for incandescent lamps, or an adaptor that converts a GU-24 socket to an Edison socket.

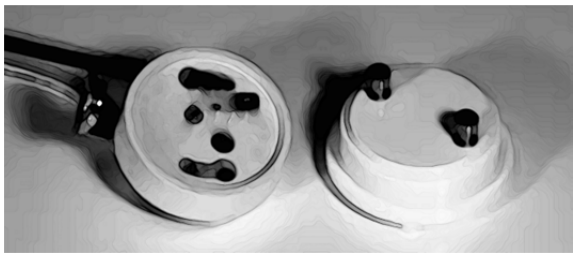

Figure 6-2 – GU-24 socket and base

Source: http://www.northernlightsusa.com/sites/default/files/imagecache/product_full/GU24_0.jpg.

Figure 6-3 – GU-24 Lamps

6.3.6 NO "Permanent" GU-24 Adaptors

Luminaires manufactured and rated with only GU-24 sockets are recognized as high efficacy. The Standards do not recognize any socket adaptor as being able to permanently convert one type of luminaire to another type of luminaire for compliance with the Standards. For example, there are no "permanent" adaptors recognized for converting a luminaire with an incandescent screw-base socket to a permanently installed compact fluorescent luminaire, regardless of manufacturer declarations.

Figure 6-4 – A screw-base to GU-24 socket adaptor is not recognized as high efficacy by Title 24.

6.3.7 LED Must Be Certified to Qualify as Residential High Efficacy

Unlike CFL and GU-24 luminaires, LED luminaires must be certified to the Commission by the manufacturer to qualify as "high efficacy". If LEDs are not certified, they are classified as low efficacy regardless of their actual efficacy.

Screw-based compact fluorescent lamps have never been recognized as permanently installed fluorescent lighting systems for compliance with the Standards. Similarly, LED screw based lamps, and LED screw based light engines, are also not recognized as an LED luminaire for compliance with the Standards.

There are special provisions for LED lamps that have GU-24 bases—these qualify automatically as an LED luminaire. See section 6.3.5 of this chapter for additional information about luminaires with GU-24 sockets.

The market for LED luminaires has given rise to new types of luminaires and new terminology within the lighting industry. This new terminology can be confusing;

Table6-3 sets out the five types of LED lighting, and shows how to determine whether each type is high efficacy or low efficacy.

Table6-3 – Classification of LED Luminaire Types

LED type	Common examples	Is this a high efficacy luminaire?	Method for calculating Installed Kitchen lighting power
A. Integral LED luminaire	Most LED under cabinet luminaires Most LED picture lights	Yes, if it has been certified to the Energy Commission	Treat as LED luminaire (§130.0(c)9)
B. Luminaire with replaceable LED light engine	Recessed LED luminaires that have a replaceable proprietary light engine	Yes, if it does not contain a screw base or other ANSI base, and the light engine has been certified to the Energy Commission	Treat as LED luminaire (§130.0(c)9)
C. Integrated LED lamp with GU-24 base	GU-24 LED lamps LED trims designed to fit into recessed cans not having incandescent sockets.	Yes, if the luminaire has a GU-24 socket and is rated for use with only LEDs.	Treat as LED luminaire (§130.0(c)9)
D. Integrated LED lamps with any type of incandescent base	Screw-based LED lamps or LED trims designed to fit into incandescent recessed cans.	Never qualify as high efficacy	Treat as a line-voltage luminaire or line-voltage track as applicable (§130.0(c)2 or 7)
E. Non-integrated LED lamp	MR16 or MR11 lamps with “bi-pin” (GU5.3 or GX5.3) sockets that are powered by a 12V transformer	Never qualify as high efficacy	Treat as low voltage lighting (§130.0(c)8)

The five types of LED lighting in Table 1-3 are defined as follows:

A. Integral LED luminaire.

These are luminaires in which the LEDs cannot be removed from the luminaire. The luminaire forms a single unitary device in which the lamps are not replaceable. Many picture lights and under cabinet lights are integral LED luminaires. Integral LED luminaires are high efficacy if they are certified by the manufacturer to the Commission (as described in Reference Joint Appendix JA8). LED luminaires not certified to the Energy Commission are classified as low efficacy, regardless of their actual efficacy.

B. Luminaire with replaceable LED light engine

These are the similar to integrated LED lamps (above), except that the socket is not an ANSI standard socket, and is designed to connect to a luminaire housing rated for LED light engines. The connection may include a quick connect, GU-24, or other type of non-incandescent lamp holder. Many recessed LEDs are built this way. Integral LED luminaires are high efficacy only if they are certified by the manufacturer to the Energy

Commission (as described in Reference Joint Appendix JA8. See section 6.9 of this chapter).

C. Integrated LED lamp with GU-24 base

These are LED lamps which contain their own drivers, and can be directly connected to a GU-24 line-voltage socket through an ANSI GU-24 standard base.

D. Integrated LED Lamps with Any Type of Incandescent Base

These are lamps which contain their own drivers, and can be directly connected to a line-voltage socket through any type of incandescent base. Integrated LED lamps that fit into any type of incandescent luminaire never qualify as high efficacy luminaires for compliance with the Standards because they can be replaced with incandescent lamps.

E. Non-integrated LED lamp

These are similar to an integrated LED lamp with an incandescent base except that the replaceable part (the lamp) does not contain its own driver (the driver is located within the luminaire). Non-integrated lamps must have ANSI sockets. Most low-voltage LED track spotlights are non-integrated lamps. These lamps never qualify as high efficacy luminaires because they could easily be replaced with incandescent lamps.

6.3.8 Electronic Ballasts

§150.0(k)1D

Fluorescent lamps with a power rating of 13 watts or more shall have electronic ballasts that operate the lamp at a frequency of 20 kHz or more. Most commonly available electronic ballasts meet this requirement.

If in doubt, look at the number of pins protruding from the compact fluorescent lamp base. Pin-based compact fluorescent lamps operated with electronic ballasts typically have four-pin lamp holders. Pin-based compact fluorescent lamps with two-pin lamp holders typically indicate that the ballast is magnetic. Be careful not to confuse pin-based CFL sockets with GU-24 sockets.

There are additional requirements for compact fluorescent ballasts, when in recessed luminaires, to be certified to the Energy Commission. See section 6.3.9 of this chapter for additional information.

High intensity discharge (HID) lamps (like pulse-start metal halide or high-pressure sodium) are not required to have electronic ballasts. This requirement does not apply to HID luminaires.

6.3.9 Ballasts for Residential Recessed Luminaires

§110.9(f)

For recessed luminaires with compact fluorescent ballasts, the ballasts shall be certified to the Energy Commission. For additional information on certifying ballasts and other devices to the Energy Commission, see section 6.2 of this chapter.

The luminaire shall be designed and installed to allow ballast maintenance and replacement to be readily accessible to building occupants from below the ceiling without requiring the cutting of holes in the ceiling.

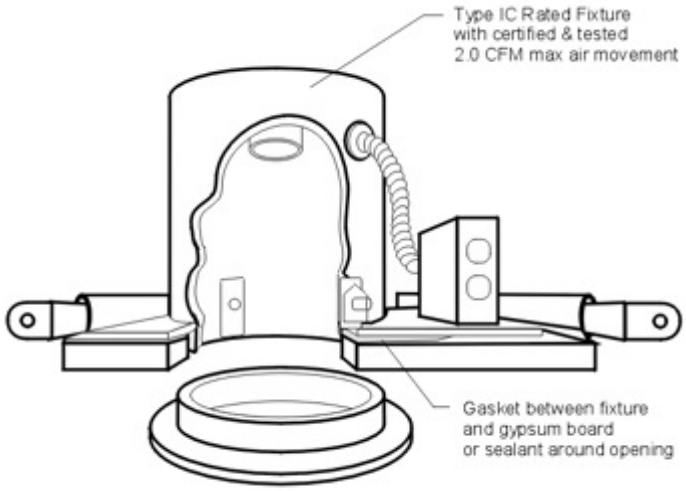

Figure 6-5 –Airtight, Type IC Luminaire

6.3.10 Night Lights

§150.0(k)1E

Permanently installed night lights and night lights integral to an installed luminaire or exhaust fan shall be rated to consume no more than 5W of power per luminaire or exhaust fan, as determined by §130.0(c).

Night lights are not required to be controlled by vacancy sensors, regardless of the type of room they are located in.

Note: Indicator lights that are integral to lighting controls shall not consume more than 5W of power per switch in accordance with §110.9(a)5.

6.3.11 Lighting Integral to Exhaust Fans

§150.0(k)1F

Lighting integral to exhaust fans shall meet the applicable requirements of §150.0(k). However, lighting which is part of a kitchen stove exhaust hood is not required to comply with §150.0(k).

This lighting integral to exhaust fans shall be controlled separately from the exhaust fan according to §150.0(k)2B.

See sections 6.5.2 for more information about lighting attached to or integral to exhaust fans.

6.3.12 IC/AT Luminaires Recessed in Ceilings

§150.0(k)8

Luminaires recessed in ceilings must meet special requirements due to the potential for thermal bridging and air paths through the ceiling insulation, and to the potential for heat build-up in the fixture to compromise the performance of the lamp. Air leaks degrade insulation performance, and can also permit condensation on the cold surface of the luminaire if exposed to moist air; for instance, in a bathroom.

Under the 2013 code, these requirements apply to all recessed luminaires (under the 2008 code they applied only to luminaires in insulated ceilings).

Luminaires recessed in ceilings must meet three requirements:

A. They shall be listed, as defined in §100.1, for zero clearance insulation contact (IC) by Underwriters Laboratories or other nationally recognized testing/rating laboratories. This enables insulation to be packed in direct contact with the luminaire.

B. They shall have a label certifying that the luminaire has airtight construction. Airtight construction means that leakage through the luminaire will not exceed 2.0 CFM when exposed to a 75 Pascals pressure difference, when tested in accordance with ASTM E283 (An exhaust fan housing shall not be required to be certified airtight).

C. They shall be sealed with a gasket or caulking between the luminaire housing and ceiling, and shall have all air leak paths between conditioned and unconditioned spaces sealed with a gasket or caulk, to prevent the flow of heated or cooled air out of the living areas and into the ceiling cavity.

The residential lighting Standards allow the use of either a gasket or caulking, and do not favor one of these methods over the other. See section 6.3.13 of this chapter for helpful information on what to look for to make sure that all air leak paths have been sealed.

The following performance requirements also apply:

A. They be certified to the Commission to comply with the applicable ballast requirements in §110.9(f) (150.0(k)8D)

B. They shall allow ballast maintenance and replacement to be readily accessible to building occupants from below the ceiling without requiring the cutting of holes in the ceiling (150.0(k)8E)

C. Ballasts for fluorescent lamps rated 13 watts or greater shall be electronic and shall have an output frequency no less than 20 kHz.150.0(k)1D

Example 6-1: Recessed luminaires: fire-rated housings

Question

If a factory manufactured fire rated luminaire housing is placed over a recessed luminaire in a multi-family residential dwelling unit, is the luminaire still required to comply with the IC requirements?

Answer

There are limited applications where a non-IC luminaire may be used conjunction with a manufactured fire rated luminaire housing in a multi-family residential dwelling unit. However, the luminaire shall still comply with all of the airtight requirements.

A non-IC luminaire may be used in a ceiling in conjunction with a fire rated housing only if all three of the following conditions are met:

1. The multi-family dwelling unit is an occupancy type R1 or R2; and
2. The luminaire is recessed between different dwelling units that are regulated by California Building Code §712.4.1.2; and
3. The manufactured fire rated housing is rated for a minimum of 1 hour fire in accordance with UL 263.

6.3.13 Building Official Inspection of IC/AT Requirements

§150.0(k)12

A. As covered in section 6.3.12 of this chapter, recessed luminaires shall be IC rated and have a gasket or caulking between the housing and ceiling to prevent the flow of heated or cooled air between conditioned and unconditioned spaces.

B. The luminaire shall include a label certifying airtight or similar designation to show air leakage less than 2.0 CFM at 75 Pascals when tested in accordance with ASTM E283. The label shall be clearly visible for the building inspector. The building inspector may verify the IC and ASTM E283 labels at a rough inspection. If verified at final inspection the building inspector may have to remove the trim kit to see the labels.

C. The ASTM E283 certification is a laboratory procedure intended to measure only leakage of the luminaire housing or, if applicable, of an airtight trim kit, and not the installation.

   Luminaire housings labeled as airtight, airtight ready or other airtight designation does not establish that a luminaire has been installed airtight.

   The luminaire manufacturer shall provide instructions that explain the entire assembly required to achieve an airtight installation.

D. There are several different methods used by manufacturers to meet the airtight standards. The residential lighting Standards do not favor one airtight method over another, including they do not prefer the use of gaskets over caulk, or the use of caulk over gaskets for compliance with the Standards.

   Because a luminaire housing is not always installed perfectly parallel to the ceiling surface, both methods have their benefits as follows:

   1. Caulk will generally fill in and seal wide and uneven gaps. However, after the caulk dries, it may permanently attach the luminaire housing or trim to the ceiling surface. Therefore, the caulk may need to be cut away from the ceiling surface in the event that a luminaire housing or trim needs to be moved away from the ceiling.
   2. Many gaskets allow the luminaire housing or trim to be readily moved away from the ceiling surface after it has been installed. However, if the gasket is too thin, or not made out of an air stopping type of material, it may not sufficiently reduce the air flow between the conditioned and unconditioned spaces.

Although the Standards do not specify the type of material needed for a gasket, it is likely that an open cell type of foam, particularly if the gasket is relatively thin, will not create an airtight barrier.

E. The primary intent is to install a certified airtight luminaire so that it is sufficiently airtight to prevent the flow of heated or cooled air between conditioned and unconditioned spaces. All air leak paths through the luminaire assembly or through the ceiling opening shall be sealed. Leak paths in the installation assembly that are not part of the ASTM E283 testing shall be sealed with either a gasket or caulk.

One example may apply for assemblies where a certified airtight luminaire housing is installed in an adjustable mounting frame; all air leak paths between the certified airtight luminaire housing and the adjustable mounting frame shall be sealed, either with a gasket or caulk.

Following is the process for verifying that the requirements for an airtight installation are met.

1. Manufacturer specifications (a "cut sheet") of the certified airtight luminaire housing(s) and installation instructions shall be made available with the plans to show all components of the assembly that will be necessary to insure there is an airtight installation consistent with §150.0(k)8. This allows the building inspector to know what method the luminaire manufacturer specifies to achieve airtight installation, and therefore, at what phase of construction the building inspector shall inspect the luminaire for airtight compliance.

2. One of the following primary methods is specified by the luminaire manufacturer to insure an airtight seal of the certified airtight housing to the ceiling:

   a. A gasket is attached to the bottom of the certified airtight housing prior to the installation of the ceiling (i.e. drywall or other ceiling materials) to create an airtight seal. The gasket may be preinstalled at the factory, or may need to be field installed. For field installed gaskets, instructions on how the gasket is to be attached shall be provided by the manufacturer. The luminaire shall be installed so that the gasket will be sufficiently compressed by the ceiling when the ceiling is installed. A gasket that is too thin will not provide an airtight seal.

   b. A gasket is applied between the certified airtight housing and the ceiling opening after the ceiling has been installed. The gasket creates the airtight seal. The cut sheet and installation instructions for achieving the airtight conditions shall indicate how the gasket is to be attached.

   c. Caulk is applied between the certified airtight housing and the ceiling after the ceiling has been installed. The caulk creates the airtight seal. The cut sheet or installation instructions for achieving the airtight conditions shall specify the type of caulk that must be used and how the caulk shall be applied.

   d. A certified airtight trim kit is attached to the housing after the ceiling has been installed. The certified airtight trim kit in combination with the luminaire housing makes the manufactured luminaire airtight.

Note that a decorative luminaire trim that is not ASTM E283 certified does not make the manufactured luminaire airtight. Most decorative luminaire trims are not designed to make a luminaire airtight. Rather, these trims are used to provide a finished look between the ceiling and luminaire housing, and may include a reflector, baffle, and/or lens.

However, some trim kits are specifically designed to be a critical component used to make a luminaire installation airtight. These trim kits shall be certified airtight in accordance with ASTM E283. Certified airtight trim kits typically consist of a one-piece lamp-holder, reflector cone, and baffle.

The cut sheet and installation instructions for achieving the airtight conditions shall show which certified airtight trim kits are designed to be installed with the luminaire housing, and how the certified airtight trim kits shall be attached. A gasket shall be installed between the certified airtight trim kit and the ceiling.

3. The following methods for insuring an airtight seal between the certified airtight housing or certified airtight trim and the ceiling shall be field verified at different phases during construction:

   a. A gasket attached to the bottom of the certified airtight housing shall be inspected prior to the installation of the ceiling when the rough-in electrical work is visible.

      The inspector shall review the cut sheet or installation instructions to make sure the housing and gasket have been installed correctly.

      All gaskets shall be permanently in place at the time of inspection. It is important that once the ceiling material is installed the gasket will be in continuous, compressed contact with the backside of the ceiling and that the housing is attached securely to avoid vertical movement.

      The housing shall be installed on a plane that is parallel to the ceiling plane to assure continuous compression of the gasket.

   b. A gasket applied between the certified airtight housing and the ceiling after the ceiling has been installed shall be inspected after the installation of the ceiling.

      The inspector shall review the cut sheet or installation instructions to make sure the housing and gasket have been installed correctly.

      The gasket shall be permanently in place at the time of inspection. It is important that the gasket is in continuous, compressed contact with the ceiling, and that the housing is attached securely to avoid vertical movement.

   c. Caulk applied between the certified airtight housing and the ceiling after the ceiling has been installed shall be inspected after the installation of the ceiling.

      The inspector shall review the cut sheet or installation instructions to make sure the housing has been installed correctly and the

caulk has been applied correctly. It is important and that the housing is attached securely to avoid vertical movement.

d. A certified airtight trim kit shall be inspected after the installation of the ceiling and the installation of the trim.

The inspector shall review the cut sheet or installation instructions to make sure the luminaire housing and the certified airtight trim kit have been installed correctly. It is important that the housing and the certified airtight trim kit are attached securely to avoid vertical movement.

The ASTM E283 certification is a laboratory procedure where the trim kit is tested on a smooth mounting surface. However, it is common for certified airtight trim kits to be installed against a textured ceiling or other irregular ceiling surface. It is important that the gasket is in continuous, compressed contact with the ceiling and the certified airtight trim kit. Therefore, it is important to visually inspect the certified airtight trim kit and gasket next to the ceiling to assure that a continuous seal has been produced.

Certified airtight trim kits may be installed on luminaire housings that may or may not be certified airtight. If the trim kit is certified airtight, it shall also have a sealed gasket between the trim kit and ceiling.

6.3.14 Recommendations for Luminaire Specifications

It is important that luminaires are described fully in the specifications and on drawings so that contractors and subcontractors provide and install residential lighting systems that comply with the residential lighting Standards. The specifications should be clear and complete so that contractors understand what is required to comply with the Standards.

Following are a few suggestions to help reduce the chance that there may be costly change orders required to bring a non-complying building into compliance.

A. Include all applicable residential lighting requirements in the general notes on the drawings and other bid documents.

B. Include the residential lighting requirements with each luminaire listed in the lighting schedule text and details, for example:

Table6-4 –Recommendations for Luminaire Specifications

Luminaire Type	Recommended Type of Notes for Luminaire Schedule
Bath Bar	Bath bar, GU-24 sockets rated for use with only LED lamps.
Ceiling fixture (i.e., for a bathroom application)	Fluorescent surface-mounted ceiling luminaire, with one F32-T8 fluorescent lamp and electronic ballast, meeting the requirements of §150.0(k)
LED Recessed Can (i.e., for a kitchen application)	LED recessed can certified by the manufacturer to the Energy Commission, housing rated only for use with LED and not containing incandescent sockets of any kind, meeting the IC, and airtight requirements of §150.0(k)
Incandescent Recessed Can (i.e., for a Kitchen application)	Low-voltage recessed can with a maximum relamping wattage of 50 W, meeting the labeling, IC, and Airtight requirements of §150.0(k)
Chandelier	Chandelier, controlled by a dimmer switch meeting the requirements of §150.0(k) where the dimmer is certified to the Energy Commission by the manufacturer.
Vacancy Sensor (Manual-on Occupant Sensor)	Vacancy sensor certified to the Energy Commission by the manufacturer.

6.4 Calculating Kitchen Wattage and Classifying Luminaires

§150.0(k)3; §150.0(k)8, §130.0(c)

This section contains a summary of §130.0(c) of the Standards as it relates to residential lighting. This information is used to determine luminaire classification for all permanently installed luminaires, and to determine input power in residential kitchens.

The residential lighting Standards require luminaire input power (wattage) to be determined only in kitchens.

There are two different luminaire classifications that need to be considered for complying with residential lighting Standards.

- First, all luminaires, regardless of the type of room in which they are installed, need to be classified as high or low efficacy as described in sections 6.3.2 and 6.3.3 of this chapter. This classification will determine how the luminaire will be treated in §150.0(k) of the Standards.
- Second, if the luminaire is to be installed in a kitchen, the luminaire needs to be classified according to lighting technology in accordance with §130.0(c) to determine luminaire input watts. See sections 6.4.1 through 6.4.8 of this chapter.

If the luminaire is to be installed in a kitchen, luminaire input wattage need to be determined as follows:

- Luminaires need to be labeled in accordance with section 6.4.1 of this chapter.
- Wattage shall be determined in accordance with sections 6.4.2 through 6.4.8 of this chapter (§130.0(c) of the Standards).

6.4.1 Luminaire Labeling Requirements

The Lighting Standards determine installed lighting power by using the maximum relamping rated wattage of the luminaire.

The Standards require that the maximum relamping rated wattage shall be listed on a permanent, pre-printed, factory installed label, as specified by UL 1574, 1598, 2108, or 8750, as applicable. Labels shall meet the following requirements:

The factory-installed maximum relamping rated wattage label shall not consist of peel-off or peel-down layers or other methods that allow the rated wattage to be changed after the luminaire has been shipped from the manufacturer.

EXCEPTION: Peel-down labels may be used ONLY for luminaires that are manufactured, rated, and designed to meet ALL of the following requirements:

A. The luminaire must be one that can accommodate a range of lamp wattages without changing the luminaire housing, ballast, transformer or wiring, and

B. The luminaire can only operate one lamp, and

C. The luminaire has an integrated ballast or transformer, and

D. The peel-down labels shall be layered such that the rated wattage reduces as successive layers are removed and,

E. The luminaire is capable of using only one of the following three lighting technologies:

   1. High intensity discharge luminaire, having an integral electronic ballast, with a maximum relamping rated wattage of 150 watts, or

   2. An individual low-voltage luminaire (low voltage track systems do not qualify to use this labeling method), ≤ 24 volts, with a maximum relamping rated wattage of 50 watts, or

   3. Compact fluorescent luminaire, having an integral electronic ballast, with a maximum relamping rated wattage of 42 watts.

6.4.2 Incandescent Luminaires

A. The Standards classify all luminaires with line voltage screw-base sockets as incandescent. This includes all types of medium screw base incandescent lamp.

B. For determining input power for incandescent luminaires, use the maximum relamping rated wattage of the luminaire in accordance with the labeling requirements discussed in section 6.4.1 of this chapter.

   For recessed luminaires with line-voltage medium screw base sockets, the input wattage shall never be calculated as less than 50 watts per socket, even if the relamping rated wattage on a label is less than 50 watts.

C. Luminaires and luminaire housings designed to accommodate a variety of trims or modular components that allow the conversion between incandescent and any other lighting technology without changing the luminaire housing or wiring shall always be classified as incandescent.

D. Screw-based adaptors are never recognized as converting an incandescent luminaire to any type of non-incandescent technology. Screw-based adaptors, including screw-base adaptors classified as permanent by the manufacturer, are never recognized for compliance with the lighting Standards.

E. Luminaires and luminaire housings manufactured with incandescent screw base sockets shall be classified only as incandescent.

F. Field modifications, including hard wiring of an LED module into an incandescent luminaire or luminaire housing, shall not be recognized as converting the incandescent luminaire or luminaire housing to a non-incandescent technology for compliance with the residential lighting Standards, except for very specific alterations of preexisting luminaires as

described in section 6.3.1 E of this chapter. For example, LED lighting modules having incandescent bases, or having incandescent pit-tails, shall not be recognized as LED for compliance with the Standards.

6.4.3 Fluorescent and High Intensity Discharge (HID) Luminaires

A. Both fluorescent and high intensity discharge (HID) lighting requires ballasts to operate. Therefore, luminaires with installed ballasts are either fluorescent (pin-based linear fluorescent or pin-based compact fluorescent) or HID (metal halide or high pressure sodium).

B. For determining input power for fluorescent and HID luminaires, the input watts shall be the rated lamp/ballast combination used in the luminaire, as published in the ballast manufacturer's catalogs based on independent testing lab reports as specified by UL 1598.

C. For fluorescent luminaires, this applies only to luminaires that are manufactured, rated, and designed for use with only pin-base fluorescent lamps, Screw-based compact fluorescent lamps do not qualify as fluorescent luminaires.

D. For linear LED lamps, when installed in luminaires that are manufactured, rated, and designed for use with pin-base fluorescent lamps, such LED lamps shall not be recognized as converting the fluorescent luminaire to an LED luminaire.

6.4.4 Track Lighting

Track Lighting is a system that includes luminaires and a track, rails, or cables that serve to both mount the system, and deliver electric power. There are two different type of track lighting typically used in residential kitchens: Line-voltage and Low-voltage track lighting.

As shown in Table 6-1, track lighting is always classified as low-efficacy incandescent lighting, regardless what lighting technology is actually installed on the track.

A. Line-Voltage Track Lighting

There is a menu of options available for determining the lighting power of line-voltage track lighting. Following are three options available for determining line-voltage track lighting input wattage when installed in residential kitchen lighting:

1. Use the volt-ampere rating of the branch circuit feeding the track; or
2. Use the higher the following two options:
   a. The rated wattage of all of the luminaires included in the system, where wattage is determined according to §130.0(c), or
   b. 45 watts per linear foot of track, or
3. When using a line-voltage track lighting integral current limiter, use the higher of the following two options:

a. The volt-ampere rating of an integral current limiter controlling the track or busway, or

b. 12.5 watts per linear foot of track or busway.

Note that only an Integral current limiter that has been certified by the manufacturer to the Energy Commission (§110.9) shall be recognized for determining track lighting wattage. An integral current limiter not certified to the Energy Commission shall not be recognized for compliance with the Standards. See section 6.5 of this chapter for additional information about certification requirements.

B. Low-voltage track lighting

A low-voltage track lighting system is equipped with a remote transformer for use with low-voltage equipment along the entire length of track. The wattage of low-voltage track lighting shall be the maximum rated input wattage of the transformer, as further explained in section 6.4.5 of this chapter.

6.4.5 Low Voltage Lighting

Low-voltage lighting includes luminaires and lighting systems with permanently installed or remotely installed transformers.

The wattage of low-voltage lighting shall be determined as follows:

A. For low-voltage luminaires that do not allow the addition of lamps, lamp holders, or luminaires without rewiring, the wattage shall be the rated wattage of the lamp/transformer combination.

B. For low-voltage lighting systems which allow the addition of lamps, lamp holders, or luminaires without rewiring (such as low voltage track lighting), the wattage shall be the maximum rated input wattage of the transformer.

6.4.6 LED Luminaires and Light Engines

§130.0(c)9

A. LEDs that have been certified to the Energy Commission by the manufacturer as high efficacy are the only LED luminaires recognized being “high efficacy”. LEDs that are not certified to the Energy Commission are automatically classified as low efficacy, regardless of their actual efficacy.

B. For use in residential kitchens, LED wattage shall be calculated using one of the methods below:

1. For stand-alone LED luminaires or light engines (stand-alone means you cannot add LEDs) the installed lighting power shall be the rated wattage of the installed system, when wattage has been determined by the manufacturer in accordance with IES LM-79-08.

2. For LED systems that do allow additional LEDs to be connected without rewiring, the installed lighting power shall be the maximum rated input wattage of the power supply.

3. For luminaires that use LED lamps (either integrated- or non-integrated type) installed lighting power shall be calculated as incandescent luminaires.
4. Luminaires manufactured or rated for use with line-voltage or low-voltage incandescent lamps, into which LED modules or LED lamps have been installed, shall not be recognized as LED lighting systems.

See sections 6.3.7, and 6.9 of this chapter for additional information about residential high efficacy lighting.

6.4.7 Miscellaneous Lighting Systems

§130.0(c)10

This method applies only to lighting systems which have not been addressed by another subsection of §130.0(c), and is primarily intended to address new technologies that have been introduced after the Standards were adopted. This method shall not be applied to incandescent, fluorescent, HID, or LED luminaires because these lighting technologies have already been addressed in §130.0(c).

The wattage of all other miscellaneous lighting equipment shall be the maximum rated wattage of the lighting equipment, or operating input wattage of the system, listed on a permanent, pre-printed, factory-installed label, or published in manufacturer's catalogs, based on independent testing lab reports as specified by UL 1574 or UL 1598.

6.4.8 Blank Electrical Boxes

§150.0(k)1C

In residential kitchens, the installed lighting power of electrical boxes finished with a blank cover or where no electrical equipment has been installed, and where the electrical box can be used for a luminaire or a surface mounted ceiling fan, shall be calculated as 180 watts of low efficacy lighting per electrical box.

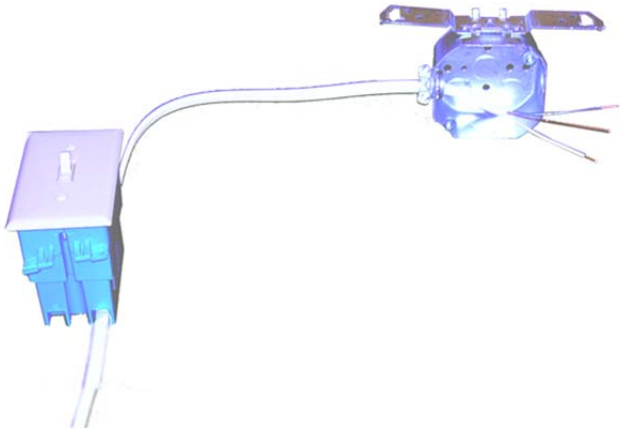

Figure 6-6 – Blank Electrical Box

6.5 Requirements for Switching Devices and Controls

The use of lighting controls is an important component of the residential lighting Standards. This section describes lighting control requirements for the residential lighting Standards.

6.5.1 Certification of Residential Lighting Controls

Manual-on/automatic-off occupant sensors (also known as vacancy sensors), motion sensors, photocontrols and astronomical timeclock controls(used for outdoor lighting), track lighting integral current limiters, and dimmers installed to comply with §150.0(k) shall be certified according to the applicable requirements of the Title 20 Appliance Standards, as described in §110.9.

Additional information about certifying devices to the Energy Commission is in section 6.2 of this chapter.

6.5.2 Lighting Control Switching Requirements

Following are controls that are required for compliance with the residential lighting Standards:

A. Permanently Installed Luminaires

All permanently installed high efficacy luminaires shall be switched separately from low efficacy luminaires.

B. Exhaust Fans

There are two options for the switching of lighting associated with exhaust fans:

1. All lighting shall be switched separately from exhaust fans, or
2. For an exhaust fan with an integral lighting system, it shall be possible for the lighting system to be manually turned on and off while allowing the fan to continue to operate for an extended period of time.

   An exhaust fan may need to run continuously if used to comply with §150.0(o).

C. Readily Accessible Manual Controls

All permanently installed luminaires shall be switched with readily accessible controls that permit the luminaires to be manually switched on and off.

D. Manufacturer Instructions

All lighting controls and equipment shall be installed in accordance with the manufacturer's instructions.

E. Multiple Switches

This requirement applies to all 3-way, 4-way, and other lighting circuits controlled by more than one switch. A lighting circuit controlled by more than one switch where a dimmer or vacancy sensor has been installed to comply with §150.0(k) shall meet the following conditions:

1. No controls shall bypass the dimmer or vacancy sensor function, and
2. The dimmer or vacancy sensor shall be certified to the Energy Commission that it complies with the applicable requirements of §119.

6.5.3 Lighting Control Systems and Energy Management Control Systems

§110.9

Lighting control devices may be either individual devices or systems consisting of two or more components. Lighting control systems and Energy Management Control Systems (EMCS) must meet the requirements of §110.9. There is no need for lighting control systems to be certified to the Commission. However, when installing a lighting control system, a licensee of record must sign a lighting control Certificate of Installation.

See section 6.2.2 of this chapter for more information about lighting control systems.

6.5.4 Vacancy Sensors

§150.0(k) and 110.9

A. The residential lighting Standards require the installation of high efficacy lighting, but allow vacancy sensors to be used as an alternate compliance option in some room types.

   See section 6.6 of this chapter to identify rooms where vacancy sensors may be used to comply with the residential lighting Standards.

B. Manual-on/automatic-off occupant sensors, also known as vacancy sensors, automatically turn lights off if an occupant forgets to turn them off when a room is unoccupied.

C. Additionally, these sensors are required to provide the occupant with the ability to manually turn the lights:

   - Off upon leaving the room, and
   - Off while still occupying a room, and
   - On upon entering the room.

   The manual–off feature is critical because it provides the occupants with the flexibility to control the lighting environment to their satisfaction, and results in greater energy savings by allowing the occupants to turn off the lights when they are not needed.

D. Vacancy sensors are required to the certified by the manufacturer to the Energy Commission in accordance with the requirements in the Title 20 Appliance Efficiency Regulations before they can be sold or offered for sale in California.

See section 6.2 of this chapter for more information about certifying lighting control devices.

E. If there are rooms or areas where there are safety concerns regarding the use of vacancy sensors, then the use of “dual technology” (infra-red plus ultrasonic) may be desirable, or alternatively the vacancy sensor may be staged to partially shut off the lighting before switching it off completely.

F. Vacancy sensors commonly on the market are wired in two different ways:

1. Where sensor operating current uses the load connection (two-wire connection).
2. Where sensor operating current uses a neutral connection (three-wire connection).

Some vacancy sensors using the load connection for operating current have minimum load requirements.

For example, a vacancy sensor may require that bulbs rated over 25W be installed before the sensor will work. However, if an occupant later installs a screw-in compact fluorescent lamp that is rated less than 25W, the sensor may no longer work.

Therefore, it is critical to select a sensor that has a low enough minimum load requirement to accommodate however small a load the occupant may install into the socket. The sensors that have a minimum load requirement are typically the ones that are designed to operate without a neutral wire in the switch box which is a common wiring scheme in older residential units.

A better solution would be to install a vacancy sensor that does not have minimum load requirements.

Vacancy sensors that are designed to take advantage of the neutral wire in the switch box typically do not have a minimum load requirement and are the preferred choice to meet the requirements of the residential lighting Standards.

Using vacancy sensors that uses the ground wire for the operating current is not recommended. There are potential safety concerns with using the ground to carry current in residential applications.

If you are trying to control a lighting fixture from two different switches you may want to use a ceiling mounted rather than a wall switch occupant sensor, or use 3-way vacancy sensors at both switch locations.

Example 6-2: Bathroom vacancy sensors—automatic on

Question

In addition to one high-efficacy luminaire, we would like to use incandescent lighting in a bathroom, controlled by a vacancy sensor. Although the vacancy sensor has the “manual-on” capability, it also has the capability of turning the lights on automatically by flipping a switch that is located under the switch plate cover. Does this sensor meet the requirements of the residential lighting Standards?

Answer

No, this vacancy sensor does not meet the requirements of the Standards. The Title 20 Appliance Efficiency Regulations, and §110.9 of the Standards require that the vacancy sensor shall not have an override switch that converts the sensor from a manual-on to an automatic-on system. Such vacancy sensors cannot be sold in California according to the Title 20 Appliance Efficiency Regulations.

Example 6-3: Bathroom vacancy sensors--manual off

Question

Must the vacancy sensor in the example above give the occupant the option of turning the light off manually upon leaving the bathroom?

Answer

Yes. The vacancy sensor must provide the occupant with the option to turn the lights off manually upon leaving the space. If the occupant forgets to turn the lights off when a room is left unoccupied then the vacancy sensor must turn the lights off automatically within 30 minutes. The lights must then be manually switched back on when the lights are needed again. This option provides the occupants with the flexibility to control the lighting environment to their satisfaction, and results in greater energy savings by allowing the occupants to turn off the lights when they are not needed.

Example 6-4: Can auto-on occupancy sensors be used?

Question

What are our options if we want to use an automatic-on occupant sensor in a bathroom, garage, laundry room, or utility room?

Answer

Automatic-on occupant sensors are not allowed under the residential lighting Standards.

6.5.5 Residential Dimmers

A. Dimmers are one of the alternate options to using high efficacy lighting in any room that is not a kitchen, bathroom, garage, laundry room, closet greater than 70 ft², or utility room.

   See section 6.6.4 of this chapter for additional information.

B. Dimmers are required to be certified by the manufacturer according to the Title 20 Appliance Efficiency Regulations. See section 6.2 of this chapter for more information about certifying lighting control devices.

C. It is important to correctly match the dimmer with the type of lighting load that is being dimmed. Failure to correctly match the dimmer with the electrical lighting load may result in early equipment failure, including the dimmer, transformer, ballast, or lamp.

   This is especially important with LED lighting; a dimmer with the appropriate power range should be chosen, to match the total wattage of lighting it controls.

D. Dimmer manufacturers typically offer three basic types of incandescent dimmers:

   1. Line voltage (120 volt), and
   2. Low-voltage for use with a magnetic transformer, and
   3. Low-voltage for use with an electronic transformer.

Line voltage incandescent lamps, including tungsten-halogen lamps, can easily be dimmed over their full range of output with voltage control or phase control (electronic) dimmers, generally without any special considerations.

When dimming a low voltage load, additional components are required in the dimmer to avoid overheating the transformer. UL has separate requirements for 120-volt and low-voltage dimmers due to the heat concern with transformers.

Example 6-5: Using dimmers on three-way lighting circuits

Question

In stairwells and some corridors, 3-way circuits are a common way to allow control of the lighting from either end of the space. How can I use dimmers to give a similar level of control?

Answer

In this case, the Standards require that the lighting must be controlled by at least one dimmer. It is functionally preferable to have dimmers at every point. However, the Standards do not require that every control point must allow dimming. One of the switches could be a dimmer and the other could be a regular toggle switch. Alternatively, more advanced controls are available that allow dimming from both ends of the circuit.

However, the toggles switch(es) must not allow the lighting to come on at a higher level than is set by the dimmer.

6.6 Requirements for Specific Indoor Space Types

6.6.1 Residential Kitchen

§150.0(k)3

The Standards define a residential kitchen as a room or area used for food storage and preparation and washing dishes including associated counter tops and cabinets, refrigerator, stove, oven, and floor areas.

Kitchen lighting includes all permanently installed lighting in the kitchen, except for lighting that is internal to cabinets for the purpose of illuminating only the inside of the cabinets. Lighting in areas adjacent to the kitchen, including but not limited to dining and nook areas, are considered kitchen lighting if they are not separately switched from kitchen lighting.

See section 6.3.1 of this chapter for a discussion of permanent versus portable lighting.

A. Determine High Efficacy and Low Efficacy Installed Wattage

§150.0(k)3A

The residential lighting Standards require that at least half of the rated lighting wattage installed in a kitchen shall be high efficacy luminaires.

For example, if 150W of high efficacy lighting is installed, no more than 150W of low efficacy lighting can be installed.

See sections 6.3.2 and **Error! Reference source not found.** of this chapter for descriptions of high and low efficacy luminaires.

Because high efficacy luminaires typically consume less power than other luminaires, about three-fourths of the luminaires in the kitchen are likely to be high efficacy.

The Residential Lighting Certificate of Installation is required to be completed to determine if kitchen lighting complies with the Standards.

There are no limits to the total number of watts that can be installed in a residential kitchen. Therefore, there are no limits to illumination levels. If higher illumination levels are needed, simply install additional wattage from high efficacy luminaires until needed illumination levels are reached.

See section 0 of this chapter for information on determining the input power (wattage) of each installed luminaire.

Example 6-6: Kitchens: Wattage calculation

Question

I am designing a residential kitchen lighting system where I plan to install six 26W compact fluorescent recessed downlights, and four 24W linear fluorescent under cabinet luminaires. Therefore, how many watts of incandescent lighting can I install?

Answer

First, determine the rated input watts of the fluorescent lighting system, including any additional wattage used by the ballasts. For this example, let's assume that the downlights with electronic ballasts are rated by the ballast manufacturer as consuming only 26W, and the under cabinet luminaires with electronic ballasts are rated by the ballast manufacturer as consuming 25W.

26 x 6 = 156W

25 x 4 = 100W

Total = 256W

Therefore, the maximum watts of incandescent lighting that can be installed is 256W.

Example 6-7: Kitchens: Rated "relamping" wattage of luminaires

Question

In the above example, if I plan to use 40W incandescent lamps (bulbs) in luminaires that have a relamping rated wattage of 90W, how many incandescent luminaires can I install?

Answer

The installed incandescent wattage is based upon the relamping rated wattage of the luminaire, and not by the wattage of the lamp. Two 90W incandescent luminaires = 180W, and three-90W incandescent luminaires = 270W. Because no more than 256W of low efficacy lighting can be installed in the above kitchen, only two-90W incandescent luminaires may be installed.

An additional 76W of low efficacy lighting may be installed somewhere else in the kitchen, provided that the total installed relamping rated wattage does not exceed the 76W still available.

Alternatively, four incandescent luminaires with a manufacturers labeled maximum relamping rated wattage of 60 watts (240W total) can be installed in the kitchen.

Example 6-8: Kitchens: Rated wattage of transformers

Question

In the above example, if I plan to use low-voltage incandescent halogen lamps with individual transformers rated at 40W each (in this example, let's assume that 40W includes the input wattage of the transformer + the lamp), how many of these low-voltage incandescent luminaires can I install?

Answer

The installed of low-voltage lighting is based upon the rating of the transformer. You are allowed up to 256W of low efficacy lighting

256 divided by 40 = 6.4 luminaires

You are allowed to install 6 low-voltage incandescent halogen luminaires with transformers rated at 40W each.

Example 6-9: Kitchens: Use of luminaires that are not certified to the Commission

Question

In the previous example, if I plan to use 15W LED luminaires which has not been certified to the Energy Commission as high efficacy, how many of these LED luminaires can I install?

Answer

LED lighting, which has not been certified by the Energy Commission as high efficacy, shall be classified as low efficacy lighting. The installed LED system wattage must include transformers, power supplies, and any other power consuming components. You are allowed up to 256W of low efficacy lighting.

In this example, let's assume a system input wattage of 15W per LED luminaire:

256 divided by 15 = 17 luminaires

You are allowed to install 17 low efficacy LED luminaires with system input wattage of 15W each.

NOTE: There would be no limit on the number of LED luminaires that could be installed, if they had been certified to the Energy Commission as high efficacy.

Example 6-10: Definition of high efficacy lighting

Question

I am using an incandescent luminaire over a sink that is rated to take a 60W lamp. The luminaire has a screw-base socket and I plan to install a 26W compact fluorescent lamp. Does this qualify as a high efficacy luminaire and what wattage should I use in determining if half the lighting power in the kitchen is high efficacy?

Answer

No, the luminaire does not count as high efficacy because it is capable of being lamped with an incandescent lamp. Use the maximum rated power (60W) for determining the percent of high efficacy lighting. If the maximum rating of the luminaire is less than 50W, it counts as a 50W luminaire for the purpose of lighting wattage calculations.

If this luminaire were manufactured with only a GU-24 twist-lock socket, and no screw-base sockets, it would be classified as a high-efficacy luminaire. Note that adaptors that convert screw-base sockets to GU-24 sockets are not recognized for compliance with the lighting Standards.

Example 6-11: Kitchens: Track lighting power calculation

Question

If I use track lighting in a kitchen, how do I calculate the power?

Answer

See §130(d) of the Standards, or section 6.4.4 of this chapter. For line voltage track, use the maximum relamping wattage of all of the installed luminaires as listed on permanent factory-installed labels, or 45W/linear feet of track, whichever is larger. If a line-voltage integral current limiter is used, use 12.5W/linear feet of track, or the volt-ampere rating of the current limiter (if the current limiter is certified to the Commission), whichever is lower.

For low-voltage tracks, use the maximum rated input wattage of the transformer as listed on a permanent factory-installed label.

Example 6-12: Kitchens: Boundary between kitchen and other rooms

Question

Where does the kitchen lighting stop and the other lighting begin in the case of a large family room with the kitchen on just one side of an approximately 24-ft by 24-ft room. Is the kitchen nook part of the kitchen? Lighting over the eating counter? Lighting in an adjacent pantry?

Answer

Lighting over food preparation areas is kitchen lighting, including areas used for cooking, food storage and preparation and washing dishes, including associated countertops and cabinets, refrigerator, stove, oven, and floor areas. Any other lighting on the same switch is also kitchen lighting, whether or not the luminaires are in the kitchen area. Lighting for areas not specifically included in the definition of a kitchen, like the nook or the family room, is not kitchen lighting, as long as it is switched separately.

Example 6-13: Kitchens: Extraction hood lighting

Question

I am installing an extraction hood over my stove, it has lamps within it. Do these lamps have to be high efficacy?

Answer

This lighting is part of an appliance, and therefore does not have to meet the residential lighting Standards for permanently installed lighting. This lighting is ignored in determining if half the kitchen lighting is high efficacy.

B. Kitchen Low Efficacy Tradeoff Option

Exception to §150.0(k)3

There is a residential kitchen lighting "tradeoff" option available when additional low efficacy lighting is needed, provided that other conditions are met.

Once it has been determined that the installed low efficacy lighting wattage is no greater than the installed high efficacy wattage, a limited number of additional low efficacy lighting wattage may be installed. The additional low efficacy wattage shown below in Table6-5 – Additional Low Efficacy Wattage Tradeoff5 may be installed provided that all lighting in the kitchen (including the high efficacy lighting) is controlled by vacancy sensors, dimmers, or by a lighting control system that provides one or both of those functions.

See section 6.2 of this chapter for requirements to certify lighting controls.

Table6-5 – Additional Low Efficacy Wattage Tradeoff

Size of Individual Dwelling Unit	Additional low efficacy lighting allowed in a residential kitchen
Less than or equal to 2,500 ft²	Up to an additional 50 W
Larger than 2,500 ft²	Up to an additional 100 W

Example 6-14: Kitchens: Additional low-wattage allowances

Question

I am designing kitchen lighting for a 2,400 ft² house. My design exceeds the 50% low efficacy lighting ratio in my kitchen. This design includes 208W of high efficacy lighting. I plan to control the high efficacy lighting in the kitchen with a vacancy sensor, and the low efficacy lighting in the kitchen with a dimmer. How many watts of low efficacy lighting can I install in my kitchen?

Answer

You are allowed an additional 50W of low efficacy lighting in the kitchen because the house is less than 2,500 ft². You are also allowed 208W of low efficacy lighting based upon the wattage of high efficacy lighting you are installing.

50W + 208W = 258W.

You are allowed to install up to 258W of low efficacy lighting in the kitchen.

C. Lighting Internal to Cabinets

Lighting mounted to a cabinet for the purpose of projecting light somewhere other than the inside of the cabinet shall be considered as kitchen lighting when determining that at least 50% of the permanently installed lighting is high efficacy. For examples, indirect lighting mounted to the top of a cabinet for illuminating the ceiling, light projected from within a cabinet onto a surface outside of a cabinet, and under cabinet lighting, are all types of lighting that are required to be counted toward the 50% residential kitchen lighting high efficacy versus low efficacy lighting.

However, lighting internal to cabinets, installed only for the purpose of illuminating the inside of the cabinets, is not considered kitchen lighting when determining that at least 50% of the permanently installed lighting in a residential kitchen is high efficacy.

Permanently installed lighting that is internal to cabinets shall use no more than 20 W of power per linear foot of illuminated cabinet.

See section 6.3.1 of this chapter for more information about permanently installed lighting.

This linear footage can be determined using any one of the following methods, regardless of the number of shelves or cabinet doors:

1. The total horizontal length of illuminated cabinets
2. The sum of the heights of each separate illuminated cabinet section
3. The sum of several height measurements, taken no closer than 40” from each other.

The third method is recommended when illuminating several cabinets that are of different heights. Figure 6-7 –6-7 shows that one vertical measurement can be taken per 40” length of illuminated cabinet. If any of the cabinets are not illuminated, they do not count toward the 40” length and should be skipped.

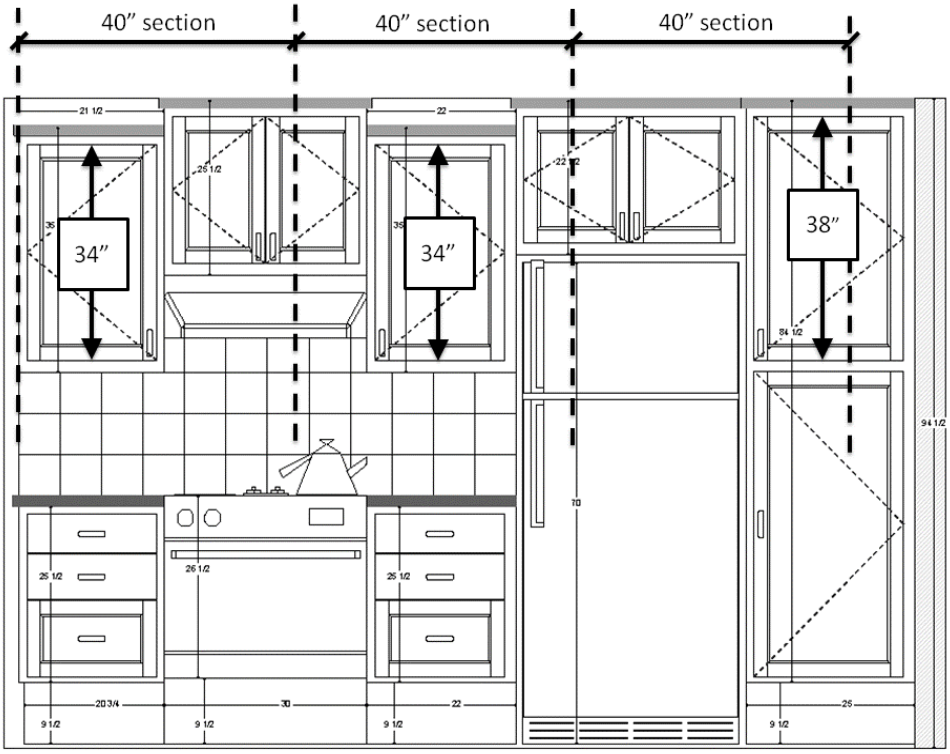

Figure 6-7 – Calculating the Linear Footage of Illuminated Cabinets Using Multiple Vertical Lengths

Lighting that is internal to cabinets is defined as lighting installed inside of a cabinet only for the purpose of the illuminating the inside of the cabinet. Lighting installed for the purpose of illuminating surfaces outside of kitchen cabinet is not considered lighting internal to cabinets. The following lighting systems are not considered lighting internal to cabinets:

1. Lighting recessed into a cabinet for the purpose of illuminating surfaces outside of the cabinet.
2. Lighting attached to any surface on the outside of a cabinet, including the top, bottom, or sides.
3. Lighting attached to the inside of a cabinet, such as reflector lamps, for the purpose of projecting light out of the cabinet.

Example 6-15: Kitchens: Cabinet lighting, number of shelves

Question

I have 23 linear feet of upper kitchen cabinets, and 32 linear feet of lower kitchen cabinets. I want to install lighting on the inside of three 6 foot sections of upper cabinet that are 30” tall, and which have glass doors. The upper cabinets have three shelves. I want to install lights under all three shelves. How many watts of lighting may I install in the cabinets?

Answer

The cabinet lighting allowance is based upon the linear footage of illuminated cabinet only, regardless of the number of shelves in each cabinet. There are three ways to calculate the allowance.

i. Horizontal length, Multiply 18 ft times 20W per foot = 360W.

ii. Number of illuminated sections. There are three separate sections of cabinet, each 30" tall. 3 times 30" = 90", times 20W per foot = 150W.

iii. Height. Height can be measured once per 40" of horizontal length. The total 18' length, divided into 40" sections, gives 5.4 sections. Assuming that the height is uniformly 30", the total height is 5.4 times 30" = 162", times 20W per foot = 270W

Using the largest of the three answers, up to 360W of internal cabinet lighting could be installed.

Example 6-16: Kitchens: Cabinet lighting, non-illuminated cabinets

Question

In the above example, if I have 18 linear feet of upper cabinets with glass doors, but I only want to install lighting in 10 linear feet of the cabinets, how many watts of lighting may I install in the cabinets?

Answer

The allowance is based upon the linear feet of cabinet that is illuminated. In this case, multiply 10 ft time 20W/ft = 200W. You are allowed to install up to 200W of internal cabinet lighting.

Example 6-17: Kitchens: Definition of cabinet lighting

Question

In the above example, I am installing puck lights under the shelves of the cabinets with glass doors. Some of the lighting will inadvertently spill through the glass. Is this still considered lighting only for the purpose of illuminating the inside of the cabinets?

Answer

Yes, this is still considered lighting for the purpose of illuminating the inside of the cabinets because the lighting system is specifically designed for illuminating the inside of the cabinets. However, if a different lighting system, such as adjustable flood lights, is designed to project lighting on to surfaces external to the cabinets, that lighting will be considered permanently installed kitchen lighting, and not internal cabinet lighting.

D. Required Kitchen Lighting Controls

High-efficacy luminaires and low efficacy luminaires are required to be controlled separately. See section 6.5 of this chapter for additional information on residential lighting controls.

All high efficacy luminaires may be controlled together, and all low efficacy luminaires may be controlled together, but to give occupants more energy-saving options, each lighting layer that serves a unique function should have the ability to operate independently. The following are some recommendations for kitchen lighting controls:

1. Recessed downlights should be controlled separately from other lighting.
2. Linear fluorescent luminaires mounted on the ceiling should be controlled separately from other lighting.
3. Under-cabinet lighting should be controlled separately from other lighting.

Under-cabinet lighting using 14W and 28W T5 linear fluorescent lamps

Source: www.gelighting.com

Figure 6-8 – Kitchen Work Surface Lighting

4. Uplights (mounted on walls or on top of cabinets) should be controlled separately from other lighting. Uplights are effective at making rooms less gloomy, so if an uplight is provided people may choose not to switch on the other lights in the room.
5. Task lighting for specific areas such as sinks or bars should be controlled separately.
6. Lighting in areas adjacent to the kitchen, such as dining and nook areas and even family rooms, is considered to be kitchen lighting if it is not separately switched from the kitchen lighting.

   It is important that lighting in other rooms is separately switched from the kitchen lighting, or the lighting in the other room will need to be considered when determining if the kitchen complies with the 50% high efficacy lighting requirements.

   The switches may be mounted on the same faceplate, but as long as the lights can be switched independently, these areas do not count as being in the kitchen.

Recessed cans with 18W CFLs light specific task areas

Wall-mounted uplights using 32W CFLs increase the sense of space

Figure 6-9 – General Kitchen Lighting

E. Kitchen Lighting Alterations

The same lighting requirements apply to any kitchen lighting alterations, additions or renovations, as to newly constructed buildings.

The Standards do not recognize the conversion of incandescent luminaires to LED luminaires for any newly constructed buildings or additions. However, for specific residential lighting alterations, Light Emitting Diode (LED) modules may be hardwired into luminaire housings manufactured for use with

incandescent lamps, and qualify as high efficacy luminaires provided ALL of the following conditions are met:

1. The luminaire has been previously used and is in its existing installation, and
2. The LED modules are not LED lamps, integrated or non-integrated type, as defined by ANSI/IES RP-16-2010 (this includes that they shall not have any type of screw base), and
3. The LED modules comply with all other requirements in §130.0(c), and
4. The LED modules are certified as high efficacy to the Energy Commission by the manufacturer in accordance with §110.9
5. The LED modules are not connected using screw-based sockets or screw-base adaptors.

Note that GU-24 sockets are not covered by an ANSI standard, and therefore are not classified as either "integrated" or "non-integrated" LED lamps under ANSI/IES RP-16-2010. Therefore LED retrofit modules with GU-24 bases qualify as high efficacy luminaires in retrofits.

Example 6-18: Kitchens: Calculating allowed wattage based on existing luminaires

Question

I am doing minor renovations to my kitchen that has six recessed incandescent cans and I am adding a new luminaire over the sink. Does this luminaire have to be a high efficacy luminaire?

Answer

Yes, all new luminaires must be high efficacy until at least 50% of the total lighting wattage comes from high efficacy luminaires (§150.2(b)1 and §150.2(b)2).

Example 6-19: Kitchens: Wattage calculation for a total remodel

Question

I am completely remodeling my kitchen and putting in an entirely new lighting system. How do the residential lighting Standards apply to this case?

Answer

All the same lighting Standards apply. This remodel is treated like newly constructed buildings.

6.6.2 Bathrooms

§100.1 definitions, §150.0(k)5

A. A bathroom is a room or area containing a sink used for personal hygiene, toilet, shower, or a tub.

B. If a sink used for personal hygiene is in a room other than a bathroom, such as bedroom, where no doors, walls, or other partitions separate the sink area from the rest of the room, and the lighting for the sink area is switched separately from room area lighting, only the luminaire(s) that are lighting the sink area must meet the bathroom lighting requirements; in this

case, lighting of the sink area includes lighting of associated counters, cabinets, and mirrors.

C. Each bathroom shall have a minimum of one high efficacy luminaire. All other lighting in bathrooms shall be high efficacy or controlled by vacancy sensors.

D. More than one circuit of luminaires may be attached to the same vacancy sensor.

Example 6-20: What types of vacancy sensors are eligible?

Question

What types of vacancy sensors qualify for controlling low efficacy lights in bathrooms?

Answer

Eligible vacancy sensors are those which have been certified by the manufacturer to the Energy Commission according to the Title 20 Appliance Efficiency Regulations. These vacancy sensors (manual-on / automatic-off occupancy sensors) do not allow the luminaire to be turned on automatically and do not have an override that allows it to remain on.

See section 6.5.4 of this chapter for more information about vacancy sensors.

Example 6-21: Vacancy sensor safety considerations

Question

Is it good lighting practice to have all the lighting in a room controlled by a single vacancy sensor?

Answer

Vacancy sensors may fail to detect people who aren't making large movements, and their sensitivity is reduced in hot environments. Vacancy sensors may cause the lights to switch off while someone is using a hazardous device. The required high efficacy luminaire in each bathroom, and any additional high efficacy luminaires in a bathroom are not required to be controlled by a vacancy sensor.

Example 6-22: Bathrooms: Medicine cabinet lighting

Question

Is the factory installed lighting system in a bathroom mounted medicine cabinet required to be either high-efficacy or controlled by a vacancy sensor?

Answer

If the factory installed lighting in a medicine cabinet is designed to only illuminate the inside of the medicine cabinet, and the lighting is controlled only by a door activated switch where the lights turn off automatically when the cabinet door is closed, then the factory installed lighting is not regulated by the residential lighting Standards. However, if the factory installed lighting is connected to a manually operated switch that can be turned on regardless of the position of the cabinet door, or the lighting is designed to illuminate or display the contents of the cabinet when the door is closed, then it is considered permanently installed lighting that must comply with the residential lighting Standards. Also, any factory installed "bath bar" or other general lighting system integrated into the medicine cabinet is considered permanently installed lighting that must comply with the residential lighting Standards.

6.6.3 Garages, Laundry Rooms, and Utility Rooms

§150.0(k)6

A. Lighting in garages (attached and detached), laundry rooms, and utility rooms shall be high efficacy, **AND** shall be controlled by vacancy sensors. See section 6.3.12 for information on residential lighting controls.

B. A garage, for compliance with the residential lighting Standards, is a non-habitable building or portion of building, attached to or detached from a residential dwelling unit, in which motor vehicles are parked.

   Garages present an opportunity to reduce energy use by providing task lighting. The end of the garage furthest from the door to the house is often used as a work area, and can be provided with high efficacy luminaires switched separately from the rest of the space.

   Because people may be working in garages for long periods, and may be obscured by cars or other large objects, ultrasonic or dual-technology vacancy sensors may be preferred to standard passive infra-red vacancy sensors. Ultrasonic sensors can “see around corners” unlike infra-red sensors which are line-of-sight.

   See section 6.3.1 of this chapter for information about when lighting integral to garage door openers does and does not have to be included as permanently installed lighting in a garage.

C. A laundry room is a non-habitable room or space which contains plumbing and electrical connections for a washing machine or clothes dryer.

D. A utility room is a non-habitable room or building which contains only HVAC, plumbing, or electrical controls or equipment; and which is not a bathroom, closet, garage, or laundry room.

Example 6-23: Vacancy sensor safety considerations

Question

Is it good lighting practice to have all the lighting in a room controlled by a single vacancy sensor?

Answer

Vacancy sensors may fail to detect people who aren’t making large movements, and the sensitivity of passive infra-red vacancy sensors is reduced in hot environments. Also, passive infra-red sensors cannot “see around corners” like ultrasonic or microwave sensors can. In spaces in which someone may be using a hazardous device (such as garages) dual-technology sensors reduce the likelihood that the lights will switch off while the room is occupied. Alternatively, sensors which dim the lights before switching them off provide an additional level of security.

Example 6-24: Laundry rooms: built-in lighting for ironing boards

Question

Is the factory installed lighting in a built-in ironing board device required to be high-efficacy and controlled by a **vacancy sensor when it is installed in a laundry room?**

Answer

Yes, if the lighting is permanently installed it must be high-efficacy and controlled by a vacancy sensor. See section 6.3.1 for additional information about permanently installed luminaires.

6.6.4 Other Rooms

§150.0(k)7

A. "Other rooms" include any room or area that is not a kitchen, bathroom laundry, garage, or utility room.

   Rooms which are classified as "other rooms" would include hallways, dining rooms, family rooms, club house, home office, bedrooms, attic spaces, and closets.

   These tend to be the rooms in which people are most aware of interior design both in terms of fashion and the usability of their living space.

   A closet defined as a non-habitable room used for the storage of linens, household supplies, clothing, non-perishable food, or similar uses, and which is not a hallway or passageway.

   A storage building is defined as a non-habitable detached building used for the storage of tools, garden equipment, or miscellaneous items.

B. Permanently installed lighting in any room classified as "other rooms" has three compliance options. The lighting shall be:

   1. High efficacy, or
   2. Controlled by a vacancy sensor, or
   3. Controlled by a dimmer

   See section 6.2 for residential lighting control requirements.

C. Note that the dimmer compliance option is available only in rooms that qualify as "other rooms." The Standards do not disallow or discourage the use of dimmers in any rooms; however dimmers shall not be recognized as a method of compliance with the residential lighting Standards for any kitchen, bathroom laundry, garage, or utility room.

D. There are many rooms in houses for which permanently installed lighting has not been provided. Instead, these rooms are often provided with switched receptacles, sometimes called, "half-hots." Many people commonly add their own portable lighting. Portable lighting is not regulated by the Title 24 residential lighting Standards. However, portable lighting is regulated by the Title 20 Appliance Efficiency Regulations.

   See section 6.3.1 of this chapter for additional information about portable lighting.

Permanently installed can be used to create variations of light throughout the room, and by reducing areas of shadow. To achieve this, use several luminaires rather than a single luminaire; wall-mounted uplights are a good choice because they are design-neutral and can be repainted. For high-end properties, linear fluorescent or LED cove lighting and other forms of concealed lighting may increase marketability.

E. Most people like to control the appearance of their rooms; providing separate switches for each layer of luminaires will make the space more attractive to tenants and will allow them to reduce their energy use.

F. Although vacancy sensors can be used in all living spaces, there are limitations in some living spaces where people are expecting to sit still for long periods of time and not move around enough to keep the sensor activated, resulting in lights going off prematurely.

G. **All Other Room Exceptions:**

1. Lighting in detached storage buildings that are less than 1000 ft², when those storage buildings are located on a residential site, are not required to comply with §150.0(k)7.

2. Closets less than 70 ft² are also exempt from these requirements.

   However, a hallway having storage shelves, such as a butler's cupboard, shall not be exempt because it is considered a hallway for compliance with the residential lighting Standards. A butler's cupboard is therefore not considered an exempt closet.

   A closet is defined as a non-habitable room used for the storage of linens, household supplies, clothing, non-perishable food, or similar uses, and which is not a hallway or passageway.

Example 6-25: Ceiling fans with integrated lighting

Question

Can a ceiling fan with integrated lighting be a high efficacy luminaire?

Answer

Yes. Ceiling fan light kits with integral CFL ballasts are available. Some LED lighting may qualify as high efficacy. LED lighting must be certified to the Energy Commission before it can be classified as high efficacy. See sections 6.2.3; 6.3.7; 6.4.6; and 6.9 for more information about requirements for residential LED lighting.

Some occupants are likely to prefer obscured lamps to visible lamps. A less efficient alternative, when the ceiling fan is installed in a room other than a kitchen, bathroom, garage, laundry room and/or utility room, is to use incandescent lamps on a dimming circuit separate to the fan circuit.

Example 6-26: Best practice for high efficacy spotlights

Question

Are high-efficacy spotlights available, to replace halogen MR16s?

Answer

Some CFLs resemble spotlights, and manufacturers may describe them as spotlights, but they produce the same diffuse light as regular CFLs.

Metal halide spotlights with 35W T-6 high efficacy lamps are available, and LEDs can be used as spotlights.

LED lighting must be certified to the Energy Commission before it can be classified as high efficacy. See sections 6.2.3; 6.3.7; 6.4.6; and 6.9 for more information about requirements for residential LED lighting.

6.7 Requirements for Residential Outdoor Lighting

§150.0(k)9

Outdoor residential lighting is sometimes subject to the residential lighting requirements, and sometimes subject to the nonresidential lighting requirements. To help clarify the distinction, **Error! Not a valid bookmark self-reference.**6-10 shows which requirements apply to various types of outdoor lighting for each building type.

<table>
<tr><th colspan="5">Residential [2] Versus Nonresidential [3] Lighting Requirements</th></tr>
<tr><th rowspan="2">Space type</th><th rowspan="2">Single-family</th><th colspan="2">Low-rise multifamily</th><th rowspan="2">High-rise multifamily and hotels</th></tr>
<tr><th>1-3 dwelling units</th><th>4 or more dwelling units</th></tr>
<tr><td>Private patios, entrances, balconies, porches; parking lots carports with fewer than eight vehicles per site</td><td>Residential</td><td colspan="2">Residential or nonresidential</td><td rowspan="3">Residential, if the lighting is separately controlled from the inside of a dwelling unit or guest room.
Otherwise, nonresidential</td></tr>
<tr><td>Residential parking garages[1], lots and carports with more than eight vehicles per site</td><td colspan="3">Nonresidential</td></tr>
<tr><td>Other outdoor lighting attached to the building</td><td colspan="2">Residential</td><td>Nonresidential</td></tr>
<tr><td>Outdoor lighting not attached to a building</td><td colspan="2">Not regulated</td><td colspan="2">Nonresidential</td></tr>
<tr><td colspan="5">1. Residential parking garages with seven or fewer vehicles are covered by the indoor residential lighting requirements.
2. “Residential” means that the lighting shall comply with §150.0(k)9A
3. “Nonresidential” means that the lighting shall comply with §110.9, §130.0, §130.2, §130.4, §140.7, and §141.0 as applicable.</td></tr>
</table>

Figure 6-10 – Applicability of Standards to Outdoor Lighting in Different Residential Building Types

6.7.1 Single-Family Buildings

All lighting attached to the residence or to other buildings on the same lot must be high efficacy, or controlled by a motion sensor and either a photocell or an astronomical time clock.

Lighting must be controlled by a manual on/off switch that does not override any automatic sensor to the “on” mode.

Motion sensors may have a temporary override function that keeps the luminaire switched on irrespective of whether motion is detected, but the

sensor must default back to automatic operation after no longer than six hours.

An Energy Management Control System (EMCS) may be used if it complies with all these requirements.

Stand-alone lighting control devices are required to be certified to the Energy Commission in accordance with the Title 20 Appliance Standards. Lighting control systems shall meet all the applicable requirements of §110.9.

See sections 6.2.1 and 6.2.2 of this chapter for additional information about lighting controls.

6.7.2 Low-Rise Multifamily Buildings

A. Low-rise multifamily buildings are subject to the same outdoor lighting requirements as single-family buildings, with the exception that outdoor lighting in the following areas is allowed to comply with either the single-family requirements or the nonresidential requirements:

1. Private patios
2. Entrances
3. Balconies
4. Porches
5. Residential parking lots and carports with fewer than eight vehicles

B. Residential parking lots and carports with eight or more vehicles are required to meet the nonresidential outdoor lighting requirements.

6.7.3 High-Rise Multifamily buildings

Any outdoor lighting attached to the building, and which is controlled from within the dwelling unit, shall meet the residential requirements.

Outdoor lighting attached to the building that is not controlled from within the dwelling unit shall meet the nonresidential requirements. For information on the nonresidential requirements, see the outdoor lighting chapter for the 2013 Nonresidential Compliance Manual.

6.7.4 Address Signs

§150.0(k)10

A. Internally illuminated address signs shall:

1. Comply with the nonresidential sign lighting Standards in §140.8, or
2. Consume no more than 5 watts of power as determined according to §130.0(c).

B. Other Signs

For high-rise residential buildings and hotels, signs that are not inside the dwelling units or guest rooms shall comply with the applicable nonresidential Sign Lighting requirements in §130.3 and §140.8. For additional information, see the Sign Lighting chapter of the 2013 Nonresidential Compliance Manual.

6.7.5 Hot and Cold Environments

Amalgam CFLs perform better at both very high and very low temperatures than non-amalgam versions, so are appropriate for outdoor lighting, although they can take a few minutes to reach full output. CFLs and ballasts that are not labeled “instant start” are likely to be amalgam lamps. If instant start is important and temperatures may be low, specify a cold-weather-rated ballast.

Alternatively, an LED luminaire may be a good choice because LEDs perform very well in cold environments.

6.7.6 Outdoor Lighting Not Attached to a Building

§150.0(k)9

Lighting that is not permanently attached to single family and low-rise multifamily buildings with fewer than four dwelling units, such as decorative landscape lighting, is not regulated by the residential lighting Standards.

However, when landscape lighting is attached to a building, it is regulated by the residential lighting Standards.

For exempt lighting, using a time clock or photocontrol on outdoor lighting not attached to buildings will help to prevent people from accidentally leaving these lights on during the day and will reduce energy use.

Example 6-27: Outdoor lighting: Glare control

Question

Are there any “cutoff” requirements for residential outdoor luminaires?

Answer

There are no “cutoff” requirements for typical residential outdoor lighting. However, residential parking lots for eight or more vehicles are required to meet the Nonresidential Standards, which do include cutoff requirements for luminaries greater than 150W. The requirement uses the Backlight, Uplight and Glare (BUG) ratings developed by the IES to define acceptable amounts of the uplight and glare (there are no limits on “backlight”). Even though not required for most residential outdoor lighting, luminaires that limit uplight are usually more efficient at providing light in the required area, so a lower wattage lamp and ballast can be used. The BUG requirements also reduce stray light and glare problems which can cause visual discomfort.

Example 6-28: Outdoor lighting: Landscape lighting

Question

I would like to install low-voltage landscape lighting in my yard. Are these required to be on a motion sensor and photocontrol?

Answer

No. The high efficacy requirement only applies to lighting mounted to the building.

Example 6-29: Outdoor lighting: Patios

Question

Does outdoor lighting on the patio of a high-rise residential building have to comply with the Residential or Nonresidential Lighting Standards?

Answer

If the patio outdoor lighting is controlled from inside of the dwelling unit, it must comply with the Residential Outdoor Lighting Standards. If the patio outdoor lighting is controlled outside of the dwelling unit, it must comply with the Nonresidential Outdoor Lighting Standards. For example, if the outdoor patio lighting is controlled by a building-wide EMCS outside of the dwelling units, it must comply with the Nonresidential Outdoor Lighting Standards.

6.7.7 Residential Parking Lots, Carports and Parking Garages

§150.0(k)13; §130; §131; §132; §134; §146; §147;; §150.0(k)11

Residential parking garages are treated as indoor spaces, whereas residential parking lots and carports are treated as outdoor space. All three types of parking facilities are required to meet either the residential or the nonresidential requirements of the Standards, depending on what type of building they are associated with, as demonstrated in Figure 6-11.

Residential Indoor [1], Residential Outdoor [2], Nonresidential Indoor [3], Nonresidential Outdoor [4]					
			Low-rise multifamily		
Space type	**Number of car spaces**	**Single-family**	**Common area is 20% or less of interior space**	**Common area is >20% of interior space**	**High-rise multifamily and hotels**
Parking garages	<8	Residential indoor		Nonresidential indoor	
	8 or more	Nonresidential indoor			
Parking lots and carports	<8	Residential outdoor	Residential outdoor, or nonresidential outdoor		Nonresidential outdoor
	8 or more	Nonresidential outdoor			

1. "Residential indoor" means that the lighting shall comply with §150.0(k)7 (see section 6.6.3).
2. "Residential outdoor" means that the lighting shall comply with §150.0(k)9 (see sections 6.7.6 and 6.7.7).
3. "Nonresidential" indoor means that the lighting shall comply with §110.9, §130.0, §130.1, §130.4, §140.6, and §141.0
4. "Nonresidential" outdoor means that the lighting shall comply with §110.9, §130.0, §130.2, §130.4, §140.7, and §141.0

Figure 6-11 – Applicability of Standards to Parking Facilities and Common Areas in Different Residential Building Types

Residential parking lots should be lighted uniformly to provide a sense of safety; this means that lighting should fill in shadows and dark corners. Two or more less powerful luminaires in different places are often preferable to a single luminaire.

The Nonresidential Outdoor Lighting Standards include the following requirements for parking lots and car ports that accommodate a total of eight or more vehicles per site:

1. Incandescent luminaires rated for lamps over 100W shall be controlled by a motion sensor. Outdoor luminaires with lamps rated over 150W must comply with the Backlight, Uplight, and Glare (BUG) requirements in §130.2 as established by the IES.
2. Luminaires shall be controlled by a photocontrol, or an astronomical time switch that turns the lighting off when daylight is available.

See the following sections for a complete view of the Nonresidential Outdoor Lighting Standards: §130.0, §130.2, §130.4, and §140.7.

Example 6-30: Parking spaces

Question

I have a low-rise multi-family complex with a total of 20 parking spaces. However, the parking spaces are arranged throughout the site in groups of only 4 spaces each. Are these parking spaces required to comply with the nonresidential outdoor lighting requirements?

Answer

Yes, these spaces are required to comply with the Nonresidential Outdoor Lighting Standards. Parking lots and carports for a total of eight or more cars per site must meet the nonresidential outdoor lighting requirements.

6.8 Common Areas of Multi-family Buildings

§150.0(k)12

Common areas in multi-family buildings include areas like interior hallways, lobbies, entertainment rooms, pool houses, club houses, and laundry facilities.

Buildings of three stories or fewer are classified as low-rise. For buildings higher than three stories the Nonresidential Standards apply to all of the common areas.

A. In low-rise multi-family buildings with four or more dwelling units where common areas are 20% or less of the building area, lighting for common areas must be high efficacy, or controlled by an occupant sensor. Occupant sensors used in common areas may have the capability of turning the lights on automatically.

B. In buildings where common areas are more than 20% of the building area, lighting in those common areas must comply with the nonresidential lighting requirements in §110.9, §130.0, §130.1, §140.6, and §141.0.

   The quality of light provided in common areas of apartments, condominiums, and townhouses should be particularly high, because older or visually impaired residents must be able to find their way safely through spaces that may contain unexpected obstacles. Providing a sufficient level of light is essential.

C. Lighting in corridors and stairwells of multi-family buildings must be controlled by occupant sensors that reduce the lighting by at least 50%.

   The lighting of staircases and stairwells is a particular safety concern; the best way to light stairs is with directional light from above, to maximize the contrast between treads and risers.

Example 6-31: Multifamily common areas: Low rise

Question

Does the lighting for an interior common-area hallway of a low-rise residential building with four or fewer dwelling units have to comply with the Residential or Nonresidential Lighting Standards?

Answer

No, the lighting of an interior common-area hallway of a low-rise residential building with four or less dwelling units must comply with the residential lighting Standards.

Example 6-32: Multifamily common areas: High rise

Question

Does the lighting for an interior common-area hallway of a high rise residential building have to comply with the Residential or Nonresidential Lighting Standards?

Answer

The lighting of an interior common-area hallway of a high rise residential building must comply with the Nonresidential Lighting Standards. All the lighting in common areas must comply with the Nonresidential Standards; lighting inside the dwelling units must comply with the residential lighting Standards.

Hallways and stairwells are required to have partial on/off occupancy sensors that switch off at least half the lighting load when the hallway or stairwell is unoccupied.

6.9 Requirements for Residential LED Lighting

The purpose of this section is to assemble all of the 2013 Title 24 Standards language related residential LED lighting into one place in this chapter.

To qualify as high efficacy for compliance with the residential lighting Standards, an LED luminaire or light engine must be certified to the Energy Commission by the manufacturer.

LEDs not certified in accordance with all of the requirements in the Standards shall be classified as low efficacy, regardless of their actual efficacy.

There are no requirements, opportunities, or provisions to certify nonresidential LED luminaires to the Energy Commission. Any LED luminaires which are not for residential applications, and which may have been certified to the Energy Commission, have been done so incorrectly by the manufacturer.

6.9.1 Certification Responsibilities

The following Standards language establishes that manufacturers are responsible to certify high efficacy LED light sources

§100.0(h)

Residential high efficacy LED light sources are required to be Certified to the Energy Commission, which requires them to be certified by the manufacturer in a declaration, executed under penalty of perjury under the laws of the State of California, that all the information provided pursuant to the certification is true, complete, accurate and in compliance with all applicable provisions of Part 6; and if applicable that the equipment, product, or device was tested under the applicable test method specified in Part 6.

§110.9(e)

To qualify as high efficacy for compliance with the residential lighting Standards in §150.0(k), a residential LED luminaire or LED light engine shall be certified to the Energy Commission according to Reference Joint Appendix JA-8. LED lighting not certified to the Energy Commission shall be classified as low efficacy for compliance with §150.0(k). Nonresidential LED lighting is not required to be certified to the Energy Commission.

6.9.2 Definitions

The following definitions in the Standards are relevant to the certification of high efficacy LED lighting sources.

§100.1(b)

Certified to the Energy Commission, means, when used in association with appliances, certified under §1606 of Title 20 of the California Code of Regulations; and otherwise means certified by the manufacturer in a declaration, executed under penalty of perjury under the laws of the State

of California, that all the information provided pursuant to the certification is true, complete, accurate and in compliance with all applicable provisions of Part 6; and if applicable that the equipment, product, or device was tested under the applicable test method specified in Part 6.

Light Emitting Diode (LED) definitions used in Part 6 are in section 6.8 of ANSI/IES RP-16-10.

6.9.3 Classifying Luminaires and Determining Input Wattage

The following Standards language regulates how to classify luminaires as LED and how to determine input wattage.

§130.0(c)5

Luminaires and luminaire housings manufactured with incandescent screw base sockets shall be classified only as incandescent. Field modifications, including hard wiring of an LED module, shall not be recognized as converting an incandescent luminaire or luminaire housing to a non-incandescent technology for compliance with Part 6.

§130.0(c)6B

Replacement of lamps in a luminaire manufactured or rated for use with linear fluorescent lamps, with linear lamps of a different technology such as linear LED lamps, shall not be recognized as converting the fluorescent luminaire to a different technology for compliance with Part 6.

§130.0(c)9

Light emitting diode (LED) Luminaires and LED Light Engine.

A. The wattage of such luminaires shall be the maximum rated input wattage of the system when tested in accordance with IES LM-79-08.

B. The maximum rated input wattage shall be labeled in accordance with §130.0(c)1. See section 6.4.1 of this chapter for additional information on luminaire labeling requirements.

C. An LED lamp, integrated or non-integrated type in accordance with the definition in ANSI/IES RP-16-2010, shall not be classified as a LED lighting system for compliance with Part 6. LED modules having screw-bases including screw based pig-tails, screw-based sockets, or screw-based adaptors shall not be recognized as a LED lighting system for compliance with Part 6.

D. Luminaires and luminaire housings equipped with screw-base sockets shall not be classified as a LED lighting system for compliance with Part 6.

E. Luminaires manufactured or rated for use with low-voltage incandescent lamps, into which have been installed LED modules or LED lamps, shall not be recognized as a LED lighting system for compliance with Part 6.

F. For LED lighting systems which allow the addition of luminaires or light engines without rewiring, the wattage of such luminaires shall be the maximum rated input wattage of the power supply, labeled in

accordance with §130.0(c)1 or published in the power supply manufacturer's catalog.

Table 150.0 - A

Table 150.0-A is shown as Table 6-1 in this chapter. According to Table 150.0-A, some of the lighting systems classified as residential high efficacy include the following:

1. GU-24 sockets rated for LED lamps.
2. Luminaires using LED light sources which have been certified to the Commission as high efficacy in accordance with Reference Joint Appendix JA8.
3. Luminaire housings rated by the manufacturer for use with only LED light engines.

Also, according to Table 150.0-A, lighting systems classified as residential low efficacy include:

1. Line-voltage lamp holders (sockets) capable of operating incandescent lamps of any type.
2. Low-voltage lamp holders capable of operating incandescent lamps of any type.
3. High efficacy lamps installed in low-efficacy luminaires, including screw base compact fluorescent and screw base LED lamps.
4. Track lighting or other flexible lighting system which allows the addition or relocation of luminaires without altering the wiring of the system.
5. Luminaires using LED light sources which have not been certified by the manufacturer to the Commission as high efficacy.
6. Lighting systems which have modular components that allow conversion between high-efficacy and low-efficacy lighting without changing the luminaires' housing or wiring.

6.9.4 Qualification Requirements for Residential Luminaires Using LED Light Source

Following is the language from Reference Joint Appendix JA8, which is required by manufacturers to qualify LEDs as residential high efficacy.

Reference Joint Appendix JA8

To qualify as a residential high efficacy luminaire using Light Emitting Diode (LED) as the light source (as defined in IES LM-80-2008), the LED light engine (as defined in ANSI/IES RP-16-2010) used in the luminaire shall be certified to the Energy Commission according to all of the following requirements, or by a method approved by the Executive Director.

If the LED light engine is inseparable from the luminaire (integral LED luminaire) then the entire luminaire shall meet the same requirements.

LED light engine(s) and integral LED luminaire(s) are referred to as LED luminaire(s) below.

a. Shall be manufactured for use in residential applications.

   LED luminaires not intended for use in residential applications, LED landscape luminaires, and luminaire housings not containing a light engine shall not be certified to the Energy Commission for the purpose of complying with Joint Appendix JA-8.

b. The efficacy of the integral LED luminaire or LED light engine, when tested in accordance with IES LM-79-2008, shall be equal to or greater than the efficacies contained in Table 6-6 (Table JA-8 in the Standards).

c. When designed or rated for indoor use shall be capable of providing a nominal Correlated Color Temperature (CCT) that includes at least one point within the range of 2700K to 4000K;

   When designed or rated for outdoor use shall be capable of providing a nominal CCT that includes at least one point within the range of 2700K to 5000K. (With tolerance defined as in ANSI C78-377-2008)

   Exception to subsection (c): Monochromatic LEDs that are only for decorative purposes

d. Shall be capable of providing a minimum Color Rendering Index (CRI) of 90.

   Exception to subsection (d): Monochromatic LEDs that are only for decorative purposes

   If the color of the LED cannot be varied by the user or by an automatic system, then the color rendering index (CRI) shall be at least 90. If the color of the LED can be varied by the user or by an automatic system, then at least one of the color variations shall have a CRI of at least 90.

e. An LED light engine shall be capable of being installed in luminaire housing without using any type of base or socket used for incandescent lamps; it may include a GU-24 or modular quick connect, but shall not include screw base sockets or adaptors of type and size E12 through E39.

f. An LED lamp, integrated or non-integrated type in accordance with the definition in ANSI/IES RP-16-2010, shall not be certified to the Energy Commission as a high efficacy luminaire or high efficacy light engine, and shall not be classified as a high efficacy luminaire for compliance with Title 24, Part 6 of the CCR.

g. The integral LED luminaire or LED light engine under test shall be tested in a Underwriters Laboratory (UL) 1598 testing apparatus in a testing laboratory participating in the ISO/IEC 17025, by the National Voluntary Laboratory Accreditation Program (NVLAP) or other laboratory accreditation body operating in accordance with ISO/IEC 17011 and produced under an ongoing inspection program carried out by a Type A inspection body in accordance with ISO/IEC 17020, accredited to ISO/IEC 17020 by an accreditation body operating in accordance with ISO/IEC 17011.

h. Each integral LED luminaire or LED light engine tested shall produce the same quantity and quality of light. An integral LED luminaire or LED light engine under test producing different Correlated Color Temperature (CCT), Color Rendering Index (CRI), total flux (per linear foot for linear systems) or other quantitative and qualitative differences in light shall be separately tested and separately certified to the Energy Commission.

i. A worst case test may be used to certify a group of integral LED luminaires or LED light engines having the same quantity and quality of light in accordance with section (h).

j. For determining efficacy, the input wattage of the integral LED luminaire or LED light engine under test shall be determined as follows:

   1. For single LED luminaires, use the maximum rated input wattage of the luminaire.

   2. When multiple LED light engines are connected to a single power supply, all possible combinations shall be tested to determine the various input wattages and efficacies for the power supply under test. The combination providing the worst case efficacy shall be the system efficacy.

   3. LED luminaires, installed on lighting track that is capable of being used with multiple lighting technologies, shall be treated as single LED luminaires in accordance with section (j)1.

      Lighting track capable of accommodating any non-LED lighting technologies shall not be certified as LED lighting.

k. For single LED luminaires, maximum rated input wattage, total luminous flux, CCT, and CRI of the integral LED luminaire or LED light engine under test shall be listed on a permanent, pre-printed, factory-installed label on the circuit board, light engine, or luminaire housing.

l. For LED systems in accordance with section (j)2, all possible wattage combinations, luminous flux, CCT, CRI, and efficacies of each of possible combination of the integral LED luminaire or LED light engine under test shall be listed on a permanent, pre-printed, factory-installed label on the power supply, or published in manufacturer's catalogs.

Table 6-6 – (Table JA8 in Nonresidential Appendix JA-8) High Efficacy Qualification Requirements for Luminaires or Light Engines Using LED Light Sources. (This table is the same as Table 6-2 of this chapter)

Power Rating per Integral LED Luminaire, or per LED Light Engine Under Test	Minimum Efficacy (Lumens Per Watt)
5 watts or less	30
Over 5 watts to 15 watts	45
Over 15 watts to 40 watts	60
Over 40 watts	90

6.10 Residential Lighting Compliance Documentation

This section covers residential lighting compliance documentation (compliance forms) that is required to be submitted to the Authority Having Jurisdiction (AHJ) for compliance with the residential lighting Standards.

Because the compliance documentation for residential lighting consists primarily of a Certificate of Installation, it is not to be submitted until after the lighting project has been completed.

As stated in section 6.1 of this chapter, all of the residential lighting requirements are mandatory measures. There are no tradeoffs between lighting and other building features.

6.10.1 Certificate of Installation

A. Person Responsible to Submit the Certificate of Installation

The Certificate of Installation is required to be submitted by a person eligible under Division 3 of the Business and Professions Code to accept responsibility for construction for all residential lighting projects. In this Certificate of Installation, the person accepting responsibility for the projected declares that the installed residential lighting complied with all of the applicable lighting requirements.

B. Number of Certificates of Installation Required

A residential lighting project may require only one, or more than one, Certificate of Installation to be submitted. For example, if one qualified person accepts responsibility for the lighting installation of an entire lighting project, only one Certificate of Installation will need to be submitted. However, if one qualified person accepts responsibility for the installation of the lighting controls, and another qualified person accepts responsibility for the installation of the luminaires, then each qualified person will separately need to submit a Certificate of Installation.

A Certificate of Installation must be submitted to the AHJ for any residential lighting project that is regulated by Part 6, whether that lighting project is for only one luminaire, or for the lighting of an entire building.

C. CF2R-LTG

The Energy Compliance documentation has been revised and reorganized. The Certificate of Installation for residential lighting is now CF2R-LTG.

D. Registration

New requirements for a documentation procedure called registration were introduced beginning with the 2008 Building Energy Efficiency Standards.

Registration is now required for all low-rise residential buildings for which compliance requires HERS field verification. When registration is

required, persons responsible for completing and submitting compliance documents, including the CF2R-LTG, are required to submit the compliance form(s) electronically to an approved HERS provider data registry for registration and retention.

Registration requirements are detailed in Chapter 1 of the 2013 Residential Compliance Manual.

The Certificate of Installation for residential lighting is completed and signed by the contractor responsible for installing hard-wired lighting systems. The installer verifies compliance with the mandatory requirements for lighting, and whether high efficacy lighting of the alternate controls (occupancy sensors, dimmer switches, etc.) was installed. Kitchen lighting and cabinet lighting wattages are indicated on this form when applicable.

When any HERS verification is required for compliance all of the CF2R forms must be registered documents from an approved HERS provider data registry.

The builder or installing contractor responsible for the installation must provide a copy of the completed, signed, and registered Certificate(s) of Installation to the HERS rater, and post a copy at the building site for review by the enforcement agency in conjunction with requests for final inspection, and provide copies of the registered CF2R forms to the home owner,

6.10.2 Documentation for Lighting Control Systems

A. Person Responsible to Submit the Certificate of Installation

As explained in section 6.2.2 of this chapter, lighting control systems are required to comply with the Certificate of Installation requirements in §130.4.

Even through the Certificate of Installation for lighting control systems is designed primarily for use as a nonresidential compliance document, it is also required whenever a lighting control system is used to comply with the residential lighting Standards.

This Certificate of Installation is also required to be submitted by a person eligible under Division 3 of the Business and Professions Code to accept responsibility for construction for all residential lighting projects. In this Certificate of Installation, the person accepting responsibility for the installation of the lighting control system declares that the installation complied with all of the applicable lighting requirements.

B. Certificate of Installation Requirements in the Standards

Following is language in the Standards that requires the Certificate of Installation to the submitted when a lighting control system is installed to comply with any of the residential lighting control requirements.

§150(k)2F

Lighting controls shall comply with the applicable requirements of §110.9.

§150(k)2G

An Energy Management Control System (EMCS) may be used to comply with dimmer requirements in §150.0(k) if at a minimum it provides the functionality of a dimmer in accordance with §110.9, meets the installation certificate requirements in §130.4, the EMCS requirements in §130.5, and complies with all other applicable requirements in §150.0(k)2.

§150(k)2H

An Energy Management Control System (EMCS) may be used to comply with vacancy sensor requirements in §150.0(k) if at a minimum it provides the functionality of a vacancy sensor in accordance with §110.9, meets the installation certificate requirements in §130.4, the EMCS requirements in §130.5, and complies with all other applicable requirements in §150.0(k)2.

§150(k)2I

A multi-scene programmable controller may be used to comply with dimmer requirements in §150.0(k) if at a minimum it provides the functionality of a dimmer in accordance with §110.9, and complies with all other applicable requirements in §150.0(k)2.

§110.9(a)4.

Lighting Control Systems, as defined in §100.1, shall be a fully functional lighting control system complying with the applicable requirements in §110.9(b), and shall meet the Lighting Control Installation requirements in §130.4.

§130.4(b) Lighting Control Installation Certificate Requirements

To be recognized for compliance with Part 6 an Installation Certificate shall be submitted in accordance with §10-103(a) for any lighting control system, Energy Management Control System, track lighting integral current limiter, track lighting supplementary overcurrent protection panel, interlocked lighting system, lighting Power Adjustment Factor, or additional wattage available for a videoconference studio, in accordance with the following requirements, as applicable:

1. Certification that when a lighting control system is installed to comply with lighting control requirements in Part 6 it complies with the applicable requirements of §110.9; and complies with Reference Nonresidential Appendix NA7.7.1.
2. Certification that when an Energy Management Control System is installed to function as a lighting control required by Part 6 it functionally meets all applicable requirements for each application for which it is installed, in accordance with Sections 110.9, 130.0 through 130.5, 140.6 through 150.0, and 150.2; and complies with Reference Nonresidential Appendix NA7.7.2.

7. Solar Ready

§110.10

This chapter of the residential compliance manual addresses residential solar ready buildings requirements. These requirements are new for the 2013 Standards (§110.10). The intent of the solar ready requirements is to provide a penetration free and shade free portion of the roof, called the solar zone. This helps ensure future installation of a solar energy system is not precluded by the original design and layout of the building and its associated equipment. There are no infrastructure related requirements, such as installation of conduit or piping, inclusion of collateral structural loads, or pre-installed mounting hardware.

The requirements for solar ready buildings are mandatory measures for newly constructed single family residences and low-rise multifamily residential buildings, and do not apply to either additions or alterations.

7.1 Overview

The requirements for solar ready buildings are all mandatory, so there are no prescriptive and performance compliance paths. Since the provisions are mandatory, there are also no tradeoffs allowed, and applicants must demonstrate compliance with each measure. There are, however, exceptions. Exceptions to mandatory requirements are described in their corresponding sections.

The chapter is organized as follows:

7.Solar Ready
7.1 Overview
7.2 Covered Occupancies
7.2.1 Single Family Residences
7.2.2 Low-rise Multifamily Buildings
7.3 Solar Zone
7.3.1 Minimum Area
7.3.2 Orientation
7.3.3 Shading
7.4 Construction Documents
7.4.1 Structural Design Loads
7.4.2 Interconnection Pathways
7.4.3 Documentation
7.5 Main Electrical Service Panel

7.6 California Fire Code Solar Access Requirements

7.7 Compliance and Enforcement

7.8 Photovoltaic Installation Requirements

7.2 Covered Occupancies

§110.10(a)

The residential solar ready requirements apply to single family residences and low-rise multifamily buildings.

7.2.1 Single Family Residences

The solar ready requirements are applicable to newly constructed single family residences located in subdivisions with 10 or more residences and where the application for a tentative subdivision map for the residences has been deemed complete by the enforcement agency on or after January 1, 2014. This allowance is for situations where subdivisions may be partially built or where the layout of streets and residences have previously been approved by the enforcement agency. The allowance applies only to the solar ready requirements. Single family residences shall comply with all other provisions of Title 24, Part 6, that are in effect on the date that the building permit application is submitted.

7.2.2 Low-rise Multifamily Buildings
The solar ready requirements are applicable to newly constructed low-rise multifamily buildings. By the Standards' definition, low-rise multifamily buildings have three stories or fewer.

7.3 Solar Zone

§110.10(b)

The solar zone is an allocated space that is unshaded, unpenetrated, and free of obstructions. It serves as a suitable place that solar panels can be installed at a future date.

For single family residences the solar zone shall be located on the roof or overhang of the building.

For low-rise multifamily buildings the solar zone can be located at any of the following locations:

- Roof of building
- Overhang of the building
- Roof and overhang of another structure located within 250 feet (75 meters) of the primary building
- Covered parking installed with the building project

- Other structures include, but are not limited to, trellises, arbors, patio covers, carports, gazebos, and similar accessory structures.

The solar zone design must comply with the access, pathway, smoke ventilation, and spacing requirements as specified in Title 24, Part 9 or in any requirements adopted by a local jurisdiction. These additional requirements are located in other Parts of Title 24 including Parts 2, 2.5, and 9 that are adopted by the California Building Standards Commission as part of the California Building Standards Code.

7.3.1 Minimum Area

§110.10(b)1

The total area of the solar zone may be composed of multiple sub-areas. No dimension of a sub-area can be less than five feet. If the total roof area is equal to or less than 10,000 square feet (1,000 square meters), each sub-area must be at least 80 square feet (8 square meters). If the total roof area is greater than 10,000 square feet (1,000 square meters), each sub-area must be at least 160 square feet (16 square meters).

A. Single Family Residences

The solar zone shall be located on the roof or overhang of the building. The solar zone shall have a total area that is no less than 250 square feet (25 square meters). There are multiple exceptions, as described below, to the required total solar zone area. For Exceptions 1, 2 and 7 below, although the language in the Standards implies that these three exceptions only apply to the solar zone requirements, the intent of the Standard is for the exceptions to apply to the solar zone requirement as well as the interconnection pathway requirements described in section 110.10(c), the documentation requirements described in section 110.10(d), and the electric service panel requirements described in section 110.10(e).

Exceptions

1. Single family residences are exempt from the solar zone, interconnection pathway and documentation requirements if a solar PV system with a nameplate direct current (DC) power rating, of 1000 watts or greater is permanently installed at the time of construction. The nameplate rating must be measured under Standard Test Conditions. The permanently installed solar electric system is not required to be located on the roof of the building. To verify compliance with this exception form *CF2R-SPV-01-E Certificate of Installation: Photovoltaic Systems* must be submitted.

2. Single family residences are exempt from the solar zone, interconnection pathway and documentation requirements if a domestic solar water-heating system is permanently installed at the time of construction. The SWH system must comply with the installation criteria in the Reference Residential Appendix RA4.4.21

and having a minimum solar savings fraction of 0.50 is permanently installed at the time of construction. This is the equivalent of the prescriptive solar water-heating system requirements when installing an electric-resistance storage or instantaneous water heater serving an individual dwelling unit. The permanently installed domestic solar water-heating collectors are not required to be located on the roof of the building. To verify compliance with this exception form *CF2R-STH-01-E Certificate of Installation: Solar Water Heating System* must be submitted.

3. The solar zone may be reduced to no less than 150 square feet (15 square meters) for single family residences with three stories or more and with a total floor area equal to 2,000 square feet (200 square meters) or less.

4. The solar zone may be reduced to no less than 150 square feet (15 square meters) for single family residences with a whole house fan and where the residence is located in climate zones 8 through 14 and where the residence is located in the Wildland-Urban Interface Fire Area (as defined in Title 24, Part 2). This exception is to accommodate attic and roof venting requirements in these fire areas.

5. The solar zone may be reduced to 50 percent of the potential solar zone area. For the purpose of the Standards, the potential solar zone area is the total area of the roof where annual solar access is 70 percent or greater. This exception reduces the required solar zone area when the roof is shaded by objects which are not located on the roof or any other part of the building. If the potential solar zone is smaller than the minimum solar zone area specified in §110.10(b)1A of 250 square feet, then the solar zone can be reduced to half the area of the potential solar zone. If the roof is shaded such that there is no potential solar zone area, then no solar zone is required.

   For purposes of the solar ready requirements, solar access is the ratio of solar insolation including shading to the solar insolation without shading.

$$\text{Solar Access} = \frac{\text{Solar Insolation Including Shading}}{\text{Solar Insolation Without Shading}}$$

   Objects that are excluded from the building project are objects that will not be moved or modified as part of the building project and include existing buildings, telephone poles, communication towers, trees, or other objects. Objects that are included in the building project are objects that will be constructed as part of the building project and include the building itself, HVAC equipment on the building, parking lot lights, and other similar objects. As mentioned, solar access does not take into account shading from objects that are included in the building project as the designer has control of the location of these potential obstructions.

   Annual solar access is most easily determined using an instrument that is equipped with a camera with a fisheye lens and specialized imagery processing software. The instrument can calculate the annual

solar access of any point on a proposed site based on the location of the building and information that is captured in the digital photograph. Since this type of instrument relies on photographs, their most appropriate use is to determine solar access on existing buildings. The instruments are not as useful in the design phase for newly constructed buildings when capturing a digital photograph from the proposed solar zone location is not feasible.

To determine the annual solar access during the design phase, designers will first evaluate whether there are any objects external to the building project that will shade the rooftop (or other prospective solar zone areas such as overhangs or parking shade structures). If an existing object is located to the north of all potential solar zones, the object will not shade the solar zone. Similarly, if the horizontal distance (“D”) from the object to the solar zone is at least two times the height difference (“H”) between the highest point of the object and the horizontal projection of the nearest point of the solar zone then the object will not shade the solar zone (see Figure 7-1).

If objects external to the building project could shade the solar zone, annual solar access can be quantitatively determined using several computer-aided design (CAD) software packages which can import a CAD file of the building and perform a shading analysis or several online solar quoting tools can be used which make use of both overhead and orthogonal aerial imagery. Annual solar access can be qualitatively determined using several three-dimensional modeling programs. The method/tools used to quantify that the solar access is less than 70 percent (and reduce the potential solar area) shall be documented in compliance form CF1R-SRA-02-E.

Example 7-1

Question

A house has a total roof area of 2,500 SF. The neighbor's house and trees shade the roof, so 2,100 SF of the roof has less than 70 percent annual solar access. How big does the solar zone have to be?

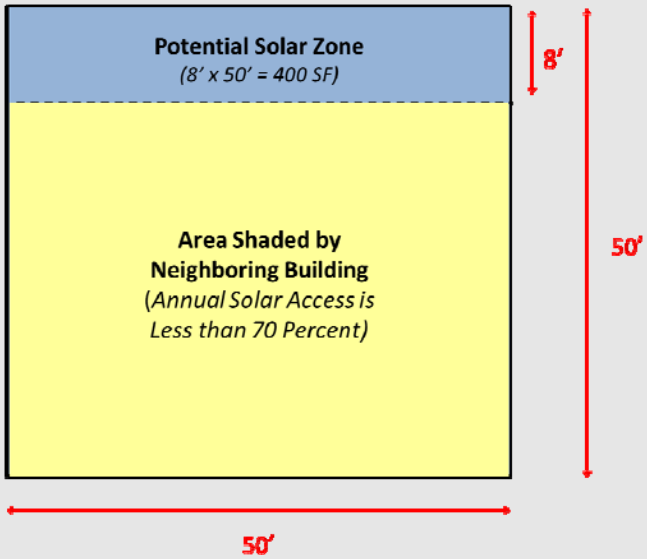

Answer

If the entire roof were to have an annual solar access of 70 percent or greater, the minimum solar zone would have been 250 SF. However, the since the potential solar zone is only 2,500 – 2,100 = 400 SF, the minimum solar zone can be reduced to 50 percent of the potential solar zone, or 200 SF.

6. The solar zone may be reduced to no less than 150 square feet (15 square meters) if all thermostats in the residence are Occupant Controlled Smart Thermostats (OCST) with communications capabilities enabled to receive and respond to Demand Response signals. An OCST is a setback thermostat with communication capabilities that enable the occupant to receive Demand Response related messages and respond to those signals by automatic adjustment of the thermostat setpoint as described in Joint Appendix JA5 (subject to occupant participation). Enabling communications capabilities requires that the OCST has one of the following: onboard communications capabilities, an installed communications module for OCSTs with removable communications module(s), or an installed communications gateway for an OCST where an external gateway is required for communications.
7. Single family residences are exempt from the solar zone, interconnection pathway and documentation requirements if all of the following conditions are met:
   a All thermostats in the residence are OCST with communications

capabilities enabled to receive and respond to Demand Response signals (subject to occupant participation). Enabling communications capabilities requires that the OCST has one of the following: onboard communications capabilities, an installed communications module for OCSTs with removable communications module(s), or an installed communications gateway for an OCST where an external gateway is required for communications.

b All permanently installed indoor lighting is high efficacy and is installed in kitchens, bathrooms, utility rooms, and garages at a minimum. Permanently installed nightlights complying with Section 150.0(k)1E and lighting integral to exhaust fans complying with Section 150.0(k)1F are allowed.

c All permanently installed lighting in bathrooms is controlled by a vacancy sensor, except for one high efficacy luminaire with total lamp wattage no greater than 26 watts.

d Every room which does not have permanently installed lighting has at least one switched receptacle installed.

e All permanently installed outdoor lighting is high efficacy and controlled by an on/off switch and either a photocontrol or astronomical time clock or energy management control system.

B. **Low-rise Multi-family Buildings**

The solar zone shall be located on the roof or overhang of the building or on the roof or overhang of another structure located within 250 feet (75 meters) of the building or on covered parking installed with the building project. Other structures include, but are not limited to, trellises, arbors, patio covers, carports, gazebos, and similar accessory structures. The solar zone shall have a total area that is no less than 15% of the total roof area of the building after subtracting any skylight area from the roof area. There are multiple exceptions, as described below, to the required total area. For Exceptions 1, 2, 4 and 5 below, although the language in the Standards implies that these four exceptions only apply to the solar zone requirements, the intent of the Standard is for the exceptions to apply to the solar zone requirement as well as the interconnection pathway requirements described in section 110.10(c), and the documentation requirements described in section 110.10(d),

Exceptions

1. Buildings are exempt from solar zone, interconnection pathway and documentation requirements if a solar electric system with a nameplate DC power rating of no less than 1 watt per square foot of roof area is permanently installed at the time of construction. The nameplate rating must be measured under Standard Test Conditions, The permanently installed solar electric system is not required to be located on the roof or overhang of the building or on the roof or overhang of another structure. To verify compliance with this exception form *CF2R-SPV-01-E Certificate of Installation: Photovoltaic Systems*

must be submitted.

2. Buildings are exempt from solar zone, interconnection pathway and documentation requirements if a domestic solar water-heating system complying with Section 150.1(c)8Ciii is permanently installed at the time of construction. This is the equivalent of the prescriptive solar water-heating system requirements when installing a water-heating system serving multiple dwelling units. The permanently installed domestic solar water-heating collectors are not required to be located on the roof or overhang of the building or on the roof or overhang of another structure. To verify compliance with this exception form *CF2R-STH-01-E Certificate of Installation: Solar Water Heating System* must be submitted.

3. The solar zone may be reduced to 50 percent of the potential solar zone area. The potential solar zone area is the total area of the roof where annual solar access is 70 percent or greater. This exception reduces the required solar zone area when the roof is shaded by objects which are not located on the roof or any other part of the building. If the roof is shaded such that there is no potential solar zone area, then no solar zone is required. For a detailed discussion of annual solar access, see Exception 5 under Single Family Residences.

4. Low-rise multifamily buildings that comply with items (a) through (e) below are exempt from solar zone, interconnection pathway and documentation requirements.

   a All thermostats in each dwelling unit are Occupant Controlled Smart Thermostats (OCST) with communications capabilities enabled to receive and respond to Demand Response signals. An OCST is a setback thermostat with communication capabilities that enable the occupant to receive Demand Response related messages and respond to those signals by automatic adjustment of the thermostat setpoint as described in Joint Appendix JA5 (subject to occupant participation). Enabling communications capabilities requires that the OCST has one of the following: onboard communications capabilities, an installed communications module for OCSTs with removable communications module(s), or an installed communications gateway for an OCST where an external gateway is required for communications. OCST must be certified by the Energy Commission to meet the requirements described in the Joint Appendix JA5.

   b All permanently installed indoor lighting in each dwelling unit is high efficacy and is installed in kitchens, bathrooms, utility rooms, and private garages at a minimum. Permanently installed nightlights complying with Section 150.0(k)1E and lighting integral to exhaust fans complying with Section 150.0(k)1F are allowed.

   c All permanently installed lighting in bathrooms is controlled by a vacancy sensor, except for one high efficacy luminaire with total lamp wattage no less than 26 watts.

   d Every room which does not have permanently installed lighting has

at least one switched receptacle installed.

e All permanently installed outdoor lighting for private patios, entrances, balconies, and porches is high efficacy and controlled by an on/off switch and either a photocontrol or astronomical time clock or energy management control system.

5. Buildings are exempt from solar zone interconnection pathway and documentation requirements if the roof is designed for vehicle traffic (parking lot) or if the roof is designed as a helicopter landing zone.

7.3.2 Orientation

§110.10(b)2

For both single family residences and low-rise multi-family buildings, all sections of the solar zone on steep-sloped roofs (ratio of rise to run of greater than 2:12) shall be oriented between 110 degrees and 270 degrees of true north. The orientation is important because it ensures a reasonable solar exposure if a solar energy system is installed in the future.

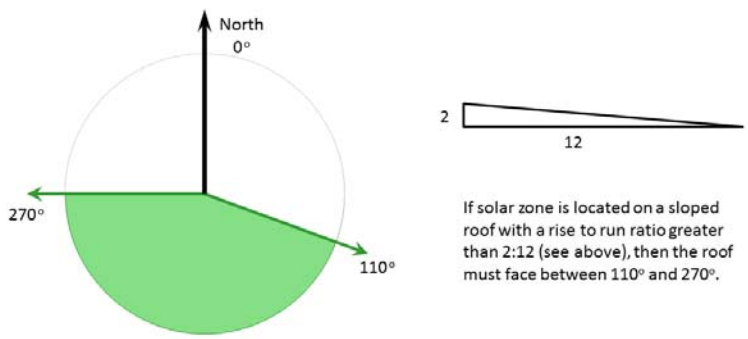

Figure 7.1: Orientation of roof if solar zone is located on steep-sloped roof.

If a solar zone is located on a low-sloped roof (ratio of rise to run less than 2:12), the orientation requirement does not apply.

7.3.3 Shading

§110.10(b)3

For both single family residences and low-rise multi-family buildings, the solar zone shall be free from roof penetrations and shall not have any obstructions such as vents, chimneys, architectural features, or roof mounted equipment located in the solar zone. This requirement ensures that the solar zone remains clear and open for the future installation of a solar energy system.

For both single family residences and low-rise multi-family buildings, any obstruction located on the roof or any other part of the building that projects above the solar zone shall be located at a sufficient horizontal distance away from the solar zone in order to reduce the resulting shading of the solar zone.

For each obstruction, the horizontal distance (“D”) from the obstruction to the solar zone shall be at least two times the height difference (“H”) between the highest point of the obstruction and the horizontal projection of the nearest point of the solar zone (see following equation).

Equation 7.1 $D \geq 2 \times H$

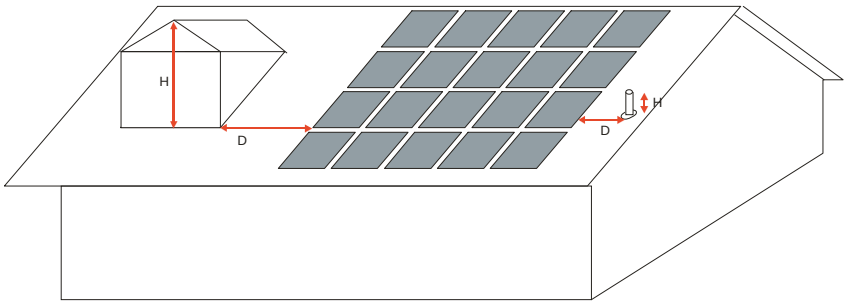

Source: California Energy Commission

Figure 7–2 - Schematic of Allowable Setback from Rooftop Obstructions

Any obstruction oriented north of all points of the solar zone is not subject to these requirements. Any obstruction which is not located on the roof or another part of the building, such as landscaping or a neighboring building is not subject to these requirements.

7.4 Construction Documents

Construction documents must include information about the as-designed structural loads and plans for interconnecting a PV and SWH system to the building’s electrical or plumbing systems.

These requirements apply to both single family residences and low-rise multi-family buildings.

7.4.1 Structural Design Loads

§110.10(b)4

For the areas of the roof designated as the solar zone, the structural design loads for roof dead load and roof live load shall be clearly indicated on the construction documents. This is required so that the structural loads are known if a solar energy system is installed in the future. There are no requirements for the inclusion of any collateral loads for future solar energy systems.

7.4.2 Interconnection Pathways

§110.10(c)

All buildings that must include a solar zone must also include a plan for connecting a PV and SWH system to the building's electrical or plumbing system. The construction documents shall indicate:

1. A location for inverters and metering equipment for future solar electric systems.
2. A pathway for routing conduit from the solar zone to the point of interconnection with the electrical service. There is no requirement to install any conduit.
3. A pathway for routing of plumbing from the solar zone to the water-heating system. There is no requirement to install any piping.

7.4.3 Documentation

§110.10(d)

A copy of the construction documents or a document containing the required solar ready information shall be provided to the occupant. The building occupant must also receive a copy of compliance forms number CF1R-SRA-01-E and CF1R-SRA-02-E. Providing this information to the building occupant is required so that the solar ready information is available if a solar energy system is installed in the future.

7.5 Main Electrical Service Panel

§110.10(e)

This requirement applies only to single family residences. The main electrical service panel shall have a minimum busbar rating of 200 amps and shall have a reserved space to allow for the installation of a double pole circuit breaker. The reserved circuit breaker space shall be on the opposite (load) end from the input feeder or main circuit location. The reserved circuit breaker space shall be permanently marked as "For Future Solar Electric". These items are required to facilitate the possible future installation of a solar electric system.

7.6 California Fire Code Solar Access Requirements

Pursuant to regulations established by the Office of the State Fire Marshal, the 2013 version of Parts 2, 2.5 and 9 of Title 24 now includes requirements for the installation of rooftop solar photovoltaic systems. These regulations cover the marking, location of DC conductors, and access and pathways for photovoltaic systems. They apply to residential and nonresidential buildings regulated by Title 24 of the California Building Standards Codes. Provided below is a brief summary of the fire code requirements for residential buildingshave dimensions in either axis greater than 150 feet. Residential buildings with hip, ridge/valley roof features shall provide a 3-foot access pathway away from applicable eave to hip/ridge/valley features. To provide adequate smoke ventilation, PV arrays are shall not be located higher than 3

feet below the ridge. Builders shall refer directly to the relevant sections of Title 24 (most currently Part 2: Section 3111, Part 2.5 Section R331, and Part 9 Section 903.3) for detailed requirements.

In addition to the requirements in the Fire Code, the California Department of Forestry and Fire Protection - Office of the State Fire Marshal (CAL FIRE-OSFM), local Fire Departments (FD), and the solar photovoltaic industry previously developed a Solar Photovoltaic Installation Guideline to increase public safety for all structures equipped with solar photovoltaic systems. The intent of this guideline is to provide the solar photovoltaic industry with information that will aid in the designing, building, and installation of solar photovoltaic systems in a manner that should meet the objectives of both the solar photovoltaic industry and the requirements now set forth in the California Fire Code.

The entire Solar Photovoltaic Installation Guideline can be accessed at: http://osfm.fire.ca.gov/pdf/reports/solarphotovoltaicguideline.pdf

The following illustrations from this Guideline demonstrate some acceptable solar access techniques..

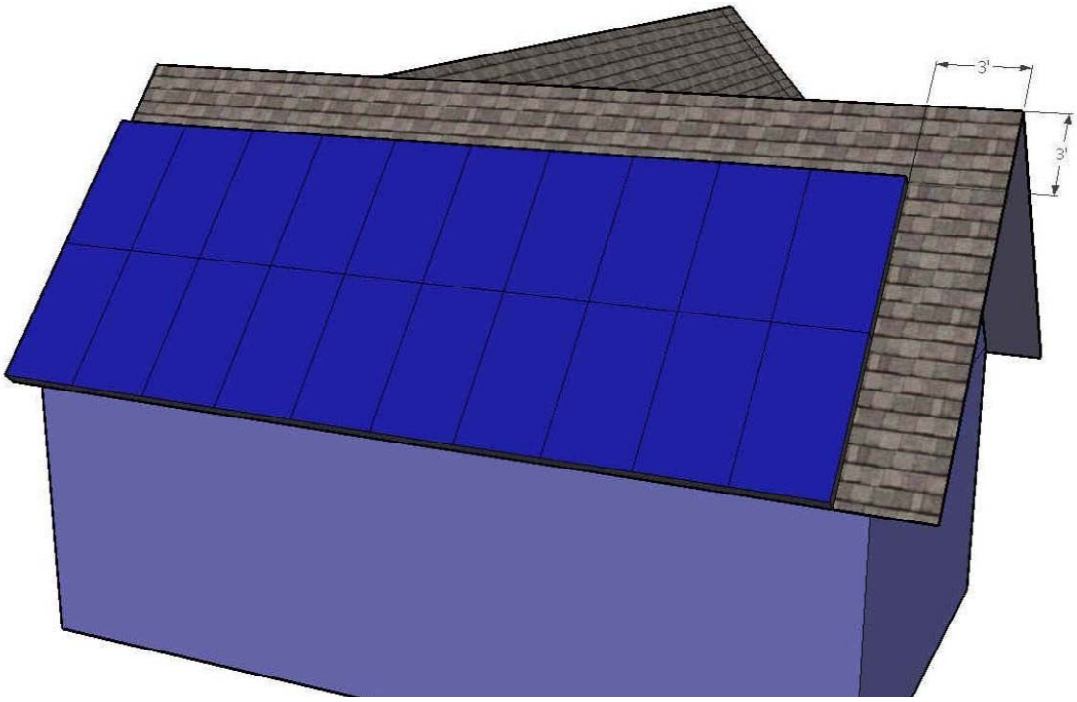

Figure 7-2 Cross Gable Roof

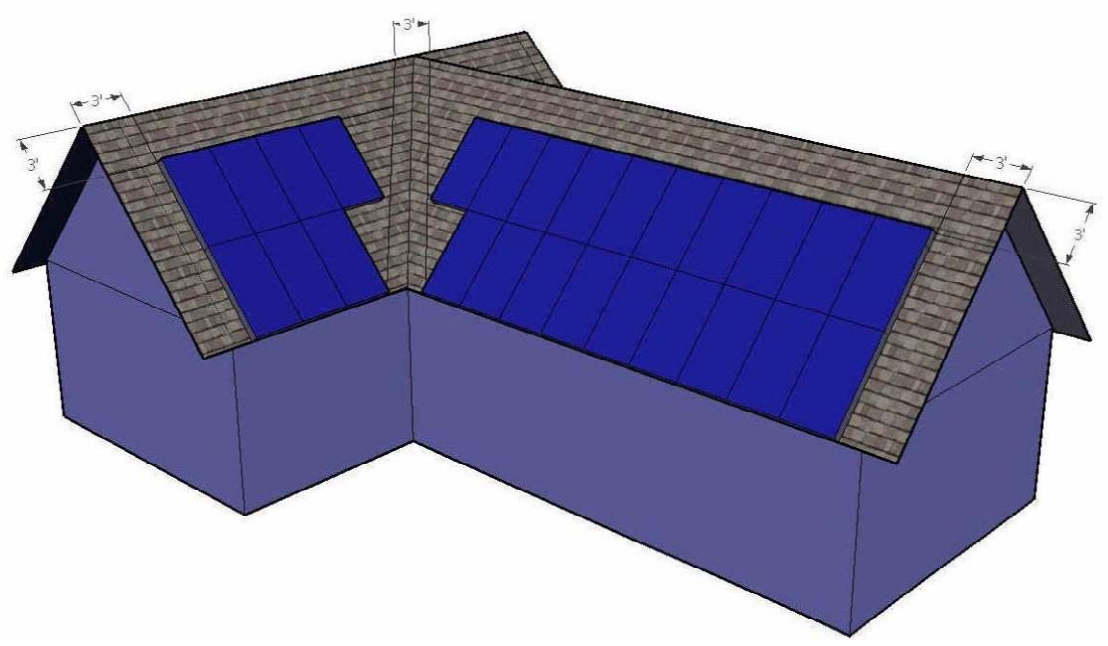

Figure 7-3 Cross Gable with Valley

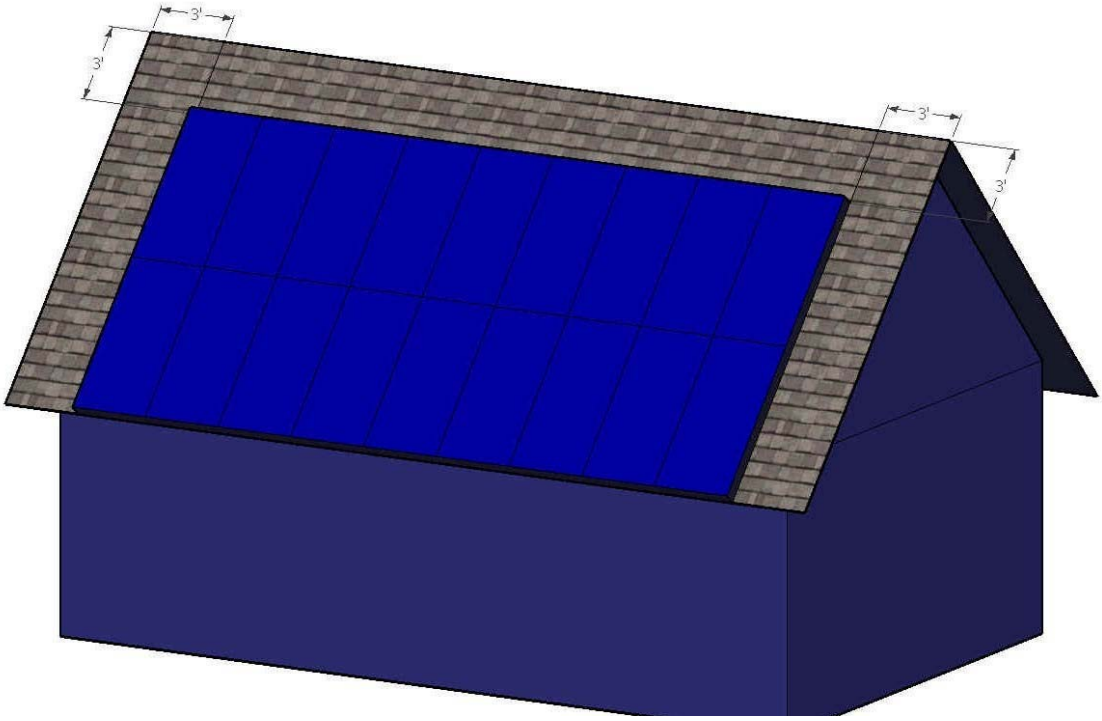

Figure 7-4 Full Gable

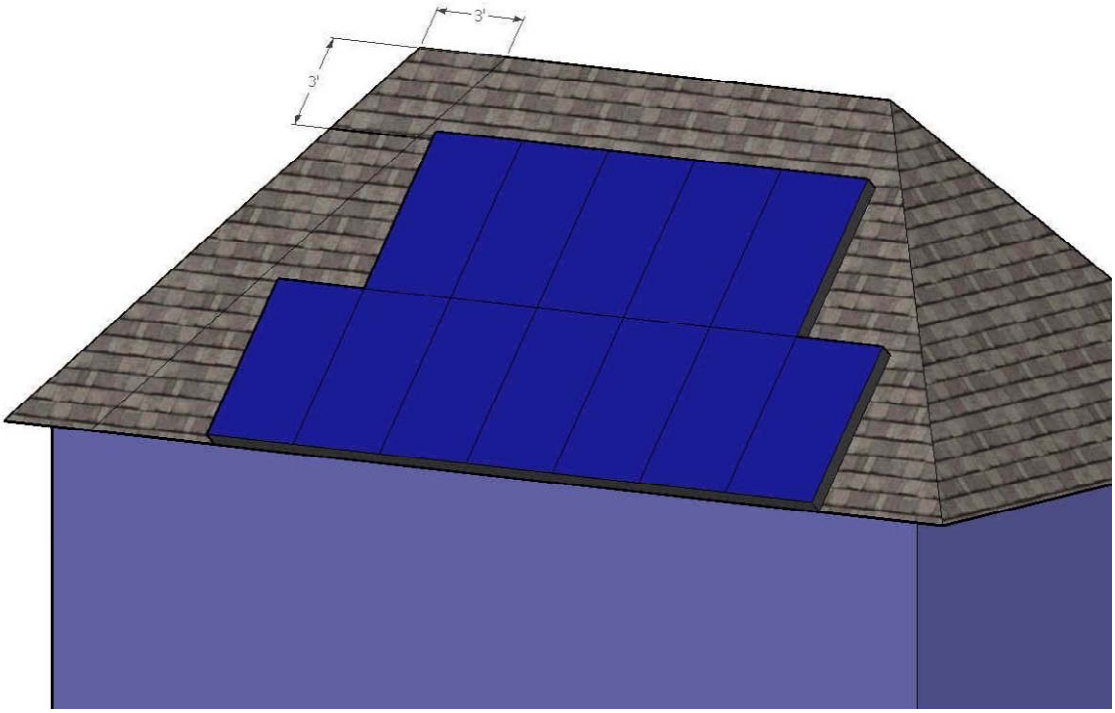

Figure 7-5 Full Hip Roof

7.7 Compliance and Enforcement

At the time a building permit application is submitted to the enforcement agency, the applicant also submits plans and energy compliance documentation. This section describes the forms and procedures for documenting compliance with the solar ready requirements of the Standards. The following discussion is addressed to the designer preparing construction and compliance documents, and to the enforcement agency plan checkers who are examining those documents for compliance with the Standards.

There are four forms associated with the nonresidential solar ready requirements. Each form is briefly described below.

- CF1R-SRA-01-E: Certificate of Compliance: Residential Solar Ready Areas

  This form is required for every project where the solar ready requirements apply: newly constructed single family residences and low-rise multifamily buildings.

- CF1R-SRA-02-E: Certificate of Compliance: Minimum Solar Zone Area Worksheet

  This form is required when buildings comply with the solar ready requirement by including a solar zone. That is, an appropriately sized solar PV system is not installed, an appropriately sized solar water heating system is not installed, the building does not comply with all the OCST and

high-efficacy lighting requirements or the roof is not designed for vehicle traffic or a heliport.

- CF2R-SPV-01-E: Certificate of Installation – Solar Photovoltaic System

  This form is required when the building is exempt from the solar zone requirements because an appropriately sized solar PV system has been installed.

- CF2R-STH-01-E: Certificate of Installation – Solar Water Heating System

This form is required when the building is exempt from the solar zone requirements because an appropriately sized solar water heating system has been installed.

8. Performance Method

8.1 Overview

This chapter explains the performance method of complying with the Standards. The method works by calculating the Time Dependent Valuation (TDV) energy use of the proposed design and comparing it to the TDV energy use of the standard design (the budget). The standard design is a building with the same size as the proposed design, but incorporating all features of Prescriptive Package A. The energy budget includes water heating, space heating, and space cooling. Lighting is not included in the performance calculations. If the proposed design uses equal or less TDV energy than the standard design, then the building complies.

Computer programs used for compliance are certified by the Energy Commission as being capable of calculating space conditioning and water heating energy use in accordance with a detailed set of rules. The computer programs models the thermal behavior of buildings by calculating heat flows into and out of the various thermal zones of the building. The computer programs certified by the Energy Commission must demonstrate their accuracy in analyzing annual space conditioning and water heating energy use of different building conservation features, levels and techniques. This method provides maximum flexibility because the building designer may trade-off the energy performance of different building components and design features to achieve compliance. Making a building more efficient will result in lower utility bills and usually improved comfort. The performance approach provides the ability to test different options and choose the best strategy to reduce your overall energy budget. With today's wide choice of high efficiency materials, equipment and controls there are many opportunities to make a building more energy efficient. Improving the building envelope provides several opportunities for improving efficiency, in particular with measures related to window placement, location, and efficiency. In space conditioning there is not only equipment with very high efficiency for space heating and cooling but also many innovative system types that eliminate the need for ducts, combine space and water heating together, or use advanced designs that can dramatically improve the building's overall performance. Improved water heating system efficiency includes a wide range equipment that can significantly increase efficiency, and improvements to the distribution system can drastically reduce energy losses.

The performance method is the most popular compliance method under the Standards, with more than 95 percent of building permit applications for newly constructed buildings being submitted in this manner. The method is especially popular with production homebuilders because they can optimize performance and achieve compliance at the lowest possible cost.This chapter provides only a general overview of the performance method. Each computer program that is certified by the Energy Commission is required to have a compliance supplement that provides more detailed information regarding the use of the software for compliance purposes. The requirements for the compliance supplement along

with other requirements for approved computer programs are documented in the 2013 Residential ACM Approval Manual.

For a detailed discussion of the performance method with additions and alterations, see Sections 9.5, 9.6 and 9.7.

8.2 What's New for 2013

In 2013, the most significant change is that all certified residential compliance software programs will use the same modeling and rules processing "Compliance Manager" software within their compliance programs. Compliance software vendors are no longer allowed to separately implement the ACM rules or use the energy modeling algorithms of their choice. This new Compliance Manager includes many advanced modeling capabilities including the modeling of solar gains, thermal mass and airflows.

As part of the new operation of the compliance software, the programs will access electronic versions of the compliance forms from an Energy Commission web server. Energy analysts using the software will need to have internet access to generate the final CF1R reports for submittal to building departments.

8.3 The Performance Compliance Process

Any certified computer program may be used to comply with the Standards using the performance method. The following steps are a general outline of the typical computer program procedure:

1. Collect all necessary data on each component. For the building envelope the area of each fenestration, wall, door, roof, ceiling and floor needs to be available. For each component the applicable energy characteristics needs to be defined including U-factor, solar heat gain coefficients, solar reflectance, and thermal mass values. The type and efficiency of space conditioning equipment. For hydronic space heating, the specific water heater model. For fan-forced conditioning systems, the location and amount of insulation of the duct system.
2. For domestic hot water systems, if the system is either not a "standard" system, or if credit is to be taken for a specific system design, the following will be required:

- Water heater model(s)
- Quantity of water heaters
- Location served by each water heater
- Distribution system design
- Additional information will be required for "built-up" systems.

Other efficiency measures and options exist that can be used to improve building efficiency. To review the complete list of options refer to your compliance software user's guide.

3. Start by entering the building envelope basic data such as square footage, number of stories, occupancy type and climate zone. Define each opaque surface with its orientation, area and thermal performance properties. Add the fenestrations that are associated with each opaque surface, including any fixed shading such as overhangs and side-fins. Enter the data on the equipment and distribution systems for the space conditioning and water heating systems. Input values and assumptions must correctly correspond to the information on the final approved plan set; and inputs must be equal to or more energy efficient than required mandatory measures.
4. Launch a computer run to automatically calculate the TDV energy of the standard design and the proposed design.

The building energy efficiency complies if all the mandatory measures are met and the total TDV energy use of the proposed design is the same as or less than the standard design TDV energy budget.

When creating a computer input file, use the space provided for the project title information to concisely and uniquely describe the building being modeled. User-designated names should be clear and internally consistent with other orientations and/or buildings being analyzed. Title names and explanatory comments should assist individuals involved in both the compliance and enforcement process.

8.3.1 Defining the Standard Design

Each approved computer program must automatically calculate the TDV energy use of the standard design. The standard design is created based upon data entered for the proposed design using all the correct fixed and restricted inputs.

The computer program defines the standard design by modifying the geometry of the proposed design and inserting the building features of prescriptive Package A. This process is built into each approved computer program and the user cannot access it. Key details on how the standard design is created and calculated by the computer programs, including the listing of fixed and restricted input assumptions are documented in the 2013 Residential ACM Manual.

The standard design assumes the same total conditioned floor area, conditioned slab floor area, and volume as the proposed design, and the same gross exterior wall area as the proposed design, except that the wall area in each of the four cardinal orientations is equal. The standard design uses the same roof/ceiling area, raised floor area, slab-on-grade area and perimeter as the proposed design, assuming the standard insulation R-values required in the prescriptive packages.

Total fenestration area in the standard design is equal to the proposed design if the fenestration area in the proposed design is less than or equal to 20 percent of the floor area, otherwise, the fenestration area of the standard design is equal to 20 percent of the floor area. Fenestration area in the standard design is evenly distributed between the four cardinal orientations. SHGC and U-factors are those listed in Package A, and no fixed shading devices such as overhangs are assumed for the standard design.

The standard design includes minimum efficiency heating and cooling equipment, as well as the minimum duct R-value with ducts in a vented attic if the proposed design has an attic. Ducts are assumed to be sealed as required by §150.0(m).

The standard design also has correct refrigerant charge as required by §150.1(c)7A

For water heating systems that serve individual dwelling units, the standard design is a 50 gallon gas storage water heater with an Energy Factor equal to the federal minimum standard. The standard design has a trunk and branch distribution system, that includes the assumption that all mandatory measures are met (i.e., the first 5 ft of hot and cold water piping from heating source) and that all piping ¾ of an inch or larger is insulated and the entire length of piping to kitchen fixtures are insulated as specified in §150.0(j)2A or §150.0(j)2B.

For multiple dwelling unit buildings, either a central distribution system may be used or individual water heaters may be installed in each unit. The standard design system type is based on what the proposed design uses. However, the standard design does not have pumped recirculation or no recirculation.

Standard Reports

For consistency and ease of enforcement, the manner in which building features are reported by Compliance Software programs is standardized. Energy Commission-approved Compliance Software programs must automatically produce compliance reports in this standard format. The principal report is the Certificate of Compliance (CF1R).

The CF1R has two highly visible sections, one for special features and modeling assumptions, and a second for features requiring field verification and/or diagnostic testing by approved HERS raters. These two sections serve as a punch list for special consideration during compliance verification by the local enforcement agency and the HERS rater. Items listed in the Special Features and Modeling Assumptions section indicate that unusual features or assumptions are used for compliance, and they call for special care by the local enforcement agency. Items listed in the HERS Required Verification section are for features that rely on diagnostic testing and independent verification by approved HERS providers/raters to ensure proper field installation. Diagnostic testing and verification by HERS providers/raters is in addition to local enforcement agency inspections.

8.3.2 Professional Judgment

Some modeling techniques and compliance assumptions applied to the proposed design are fixed or restricted. There is little or no freedom to choose input values for energy compliance modeling purposes. However, other aspects of energy modeling remain for which some professional judgment may be acceptable or necessary. In those instances, the Compliance Software user must exercise proper judgment in evaluating whether a given input is appropriate.

Enforcement agencies have discretion to reject a particular input if the permit applicant cannot substantiate the value with supporting documentation or cannot demonstrate that appropriate professional judgment has been applied.

Two questions may be asked in order to resolve whether professional judgment has been applied correctly in any particular case:

1. Is a simplified input or assumption appropriate for a specific case? If simplification reduces the predicted energy use of the proposed building or

reduces the compliance margin when compared to a more explicit and detailed modeling assumption, the simplification is not acceptable. That is, simplification must reflect the same or higher energy use than a more detailed model, and reflect the same or lower compliance margin when comparing the Standard and Proposed TDV energy.

2. Is the approach or assumption used in modeling the proposed design consistent with the approach or assumption used by the Compliance Software when generating the Standard Design energy budget?

One must always model the proposed design using the same assumption and/or technique used by the Compliance Software Manager when calculating the energy budget unless drawings and specifications indicate specific differences that warrant energy compliance credits or penalties.

Any unusual modeling approach, assumption or input value should be documented with published data and should conform to standard engineering practice.

For assistance in evaluating the appropriateness of particular input assumptions, call the Energy Hotline or call the vendor of the Compliance Software program.

Example 8-1

Question

Three different sized windows in the same wall of a new home are designed without exterior shading, and they have the exact same NFRC-rated U-factors and SHGC values. Is it acceptable professional judgment to simplify the computer model by adding the areas of the three windows together and inputting them as a single fenestration area?

Answer

Yes. The Compliance Software will produce the same results whether or not the windows are modeled individually or together as one area because the orientation, fenestration U-factors and SHGC values of the windows are identical. However, if overhangs and side-fins are modeled, the correct geometry of fixed shades must be modeled for each window.

8.4 Mixed Occupancy Buildings

§100.0(f)

Some residential buildings have areas of other occupancies, such as retail or office, in the same building. An example of this might be a three-story building with two floors of apartments above ground floor shops and offices. The first thing to consider when analyzing the energy compliance of a mixed occupancy building is the type and area of each occupancy type.

Depending on the area of the different occupancies, you may be able to demonstrate energy compliance as if the whole building is residential for the space conditioning and water heating requirements. This is allowed if the residential occupancy accounts to at least 80 percent of the conditioned floor area

of the building (or permitted space). Lighting compliance must be based on the requirements for each actual occupancy type.

Note: Mandatory measures apply separately to each occupancy type regardless of the compliance approach used. The residential envelope is subject to 150.0(a), (b), (c) and (d), while nonresidential envelope is subject to 120.7(a), (b) and (c).

For example, if complying under the mixed occupancy exception, both residential documentation (MF-1R form) and nonresidential documentation for mandatory measures must be submitted with other compliance documentation.

If the building design does not fit the criteria described above for a dominant occupancy, then the low-rise residential occupancy type must be shown to comply on its own. The remaining occupancy types must be shown to comply separately either by independent compliance for each occupancy or (for the nonresidential performance approach) by combining nonresidential occupancies in accordance with the rules of the Nonresidential ACM Manual. This may be done by using any of the approved prescriptive or performance methods available for each occupancy type. As a result, documentation for each occupancy type must also be considered separately, and a Certificate of Compliance must be submitted for each occupancy type. Note that mixed high-rise and low-rise residential occupancies will not occur in the same building because the designation applies to the building.

8.5 Multifamily Buildings

§100.1(b)

Envelope and HVAC equipment requirements for multifamily apartments in buildings that are four or more habitable stories (and hotels or motels of any number of stories) are covered by the Nonresidential Standards. These are explained in the Nonresidential Compliance Manual. Multifamily apartments in buildings that are one to three habitable stories are covered by the Residential Standards for low-rise residential buildings, which are covered in this manual.

Compliance for a low-rise multifamily building may be demonstrated either for the building as a whole or on a unit-by-unit basis. Rental apartment buildings are usually modeled as a whole building. For multifamily buildings designed for dwelling units to be owner-occupied, the project developer may favor providing a separate, unique, Title 24 compliance report for each dwelling unit. Floors and walls between dwelling units are considered to have no heat transfer, and may be ignored in performance calculations.

8.5.1 Whole-building Compliance Approach

The simplest approach to compliance for a multifamily building is to treat the building as a whole, using any of the compliance paths described in earlier chapters. In practice, this process is similar to analyzing a single family dwelling, except for some differences in water-heating budgets and internal gains, as described in the *2013 Residential ACM Manual*.

Multifamily buildings that utilize efficiency measures that require HERS field verification must submit separate compliance documentation for each individual dwelling unit in the building as specified by Reference Residential Appendix Section RA2.3. This requirement does not prevent use of the whole-building compliance approach for submittal of the Certificate of Compliance to the Enforcement Agency, however when the whole-building compliance approach has utilized a measure that requires HERS field verification, a separate copy of the whole-building Certificate of Compliance must be submitted to the HERS provider for every dwelling unit in order to satisfy the requirements of the HERS provider data registry documentation procedures. In practice, the Certificate of Compliance information may not need to be submitted to the HERS provider more than one time, but a relationship must be established in the HERS provider data registry between the whole-building Certificate of Compliance and the corresponding dwelling-specific Certificates of Installation, and the dwelling-specific Certificates of Verification. Thus, for the whole-building compliance approach in a multifamily building that has utilized a compliance option that requires HERS verification, the required energy compliance documentation for each dwelling unit should consist of a whole-building Certificate of Compliance (CF1R), a dwelling-specific Certificate of Installation (CF2R), and a dwelling-specific Certificate of Verification (CF3R).

When the whole-building compliance approach is utilized for a multifamily building, some of the energy efficiency measures that require HERS field verification cannot be used for compliance credit in the performance calculations. These HERS measures are excluded from the whole-building compliance approach because they require dwelling-specific data input to the Compliance Software, and dwelling-specific data output from the Compliance Software that must be shown on the Certificate of Compliance, therefore they cannot be properly documented using a single whole-building Certificate of Compliance.

The measures that cannot be utilized for the multifamily whole-building compliance approach, but can be taken for credit when dwelling units are individually modeled as follows:

1. Buried Ducts credit
2. Deeply Buried Ducts credit
3. Reduced Supply Duct Surface Area credit
4. Maximum Rated Total Cooling Capacity credit
5. Building Envelope Sealing credit (blower door test)

When the Standards require registration of the compliance documents, the information for the Certificate of Compliance (CF1R), Certificate of Installation (CF2R), and Certificate of Verification (CF3R) must be submitted electronically to the HERS provider data registry. Refer to Reference Residential Appendix RA2 for additional information on these document registration procedures.

8.5.2 Unit-By-Unit Compliance Approach – Fixed Orientation Alternative

The unit-by-unit compliance approach for multifamily buildings requires that each dwelling unit must demonstrate compliance separately. The fixed orientation alternative requires that each unique dwelling unit in the building, as determined

by orientation and floor level, must be separately modeled using an approved computer program. In this approach, surfaces that provide separation between dwelling units may be ignored since they are assumed to have no heat loss or heat gain associated with them. Surfaces that provide separation between dwelling units and central/interior corridor areas must be modeled for heat transfer if the corridor area is not directly conditioned or indirectly conditioned space (see Reference Joint Appendix JA1 for definition). If the corridor area is conditioned, the corridor area may be modeled separately.

Different orientations and locations of each unit type within the building must be considered separately. That is, a one-bedroom apartment on the ground floor of a three-story building is different from the same plan on a middle floor or the top floor, even if all apartments have the same orientation and are otherwise identical. Likewise, end units must be modeled separately from the middle units; and opposite end units must both be modeled. With this approach every unit of the building must comply with the Standards, so this approach is more stringent than modeling the building as a whole (see Figure 8-1).

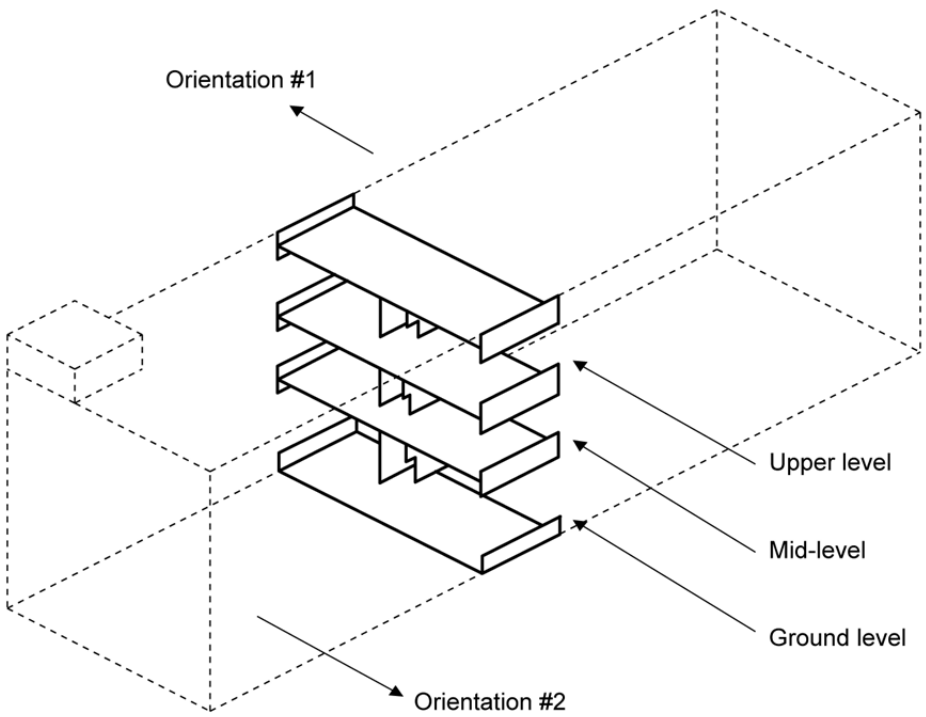

Figure 8-1 – Multifamily Building Compliance Option

Demonstrate Compliance for Each Generic Unit Type in Each of its Characteristic Locations

Example 8-2

Question

When preparing compliance calculations for a three-story apartment complex, I have the option of showing compliance for each dwelling unit or for the entire building. If I use the individual dwelling unit approach, do I need to provide calculations for every dwelling unit?

Answer

Each dwelling unit must comply with the Standards when using this approach. When dwelling units have identical conditions, the calculations can be combined. This means you will show separate compliance for all unique conditions, such as:

- Front-facing North
- Front-facing West
- Front/side walls facing East and North
- Front/side walls facing East and South
- Middle units and both end units
- Exterior roof, no exterior floor
- Exterior floor, no exterior roof

Surfaces separating two conditioned spaces (such as common walls) have little heat transfer and can be disregarded in the compliance calculations.

Note: For multiple dwelling units that is identical in every way except orientation, a single multiple orientation report can suffice or meet the compliance for that unit.

8.5.3 Unit-By-Unit Compliance Approach – Multiple Orientation Alternative

Another option for showing unit-by-unit compliance for a multifamily building is similar to a method that may be utilized for single family master plans in subdivisions (described in Section 8.6).

The computer method may be used to demonstrate that a dwelling unit plan in a multifamily building complies regardless of how it is oriented. To assure compliance in any orientation, the annual energy consumption must be calculated in each of the four cardinal orientations: true north, true east, true south and true west. With this option, a dwelling unit plan must be modeled using the identical combination of energy features and levels in each orientation, and must comply with the energy budget in each case. If a multifamily dwelling floor plan is utilized as both reversed and original/standard floor plan types, either the reversed plan or the original/standard plan may be used to demonstrate compliance, but compliance must be shown in all four cardinal orientations using only one of the plan types.

Each unique dwelling unit plan must be modeled using the worst-case condition for the energy features that the plan may contain within the multifamily building (e.g. highest glazing percentage, least overhangs, largest wall surface area, and with exterior walls instead of party walls if applicable). See Reference Residential Appendix RA 2.6.1 for information that describes how to determine when a dwelling is considered to be a unique model. Each unique dwelling plan must also be modeled separately for each unique floor level (see Figure 8-1).

8.6 Subdivisions and Master Plans

Subdivisions often require a special approach to energy compliance, since they generally include one or a few basic building or unit plans repeated in a variety of

orientations. The basic floor plans, as *drawn*, may also be used in a mirror image or *reversed* configuration.

There are two compliance options for subdivisions. They are:

1. Model each individual building, or building condition, separately according to its actual orientation.
2. Model all four cardinal orientations for each building or plan type with identical conservation features for no orientation restrictions.

8.6.2 Individual Building Approach

The most straightforward compliance option for subdivisions is to analyze each individual building in the project separately using any compliance method. This may be practical for subdivisions with only custom buildings, or with only one or two specific orientations for each building plan. This approach requires that each unit comply separately, with separate documentation submitted for each unit plan in the orientation in which it will be constructed.

8.6.3 Multiple Orientation Alternative: No Orientation Restrictions

§150.1(b)

The computer method may be used to demonstrate that a single family dwelling plan complies regardless of how it is oriented within the same climate zone. To assure compliance in any orientation, the annual energy consumption must be calculated in each of the four cardinal orientations: true north, true east, true south and true west. With this option, the buildings must have the identical combination of conservation measures and levels in each orientation and comply with the energy budget in each case.

If a building floor plan is reversed, either the original plans or the reversed plans may be shown to comply in all four cardinal orientations.

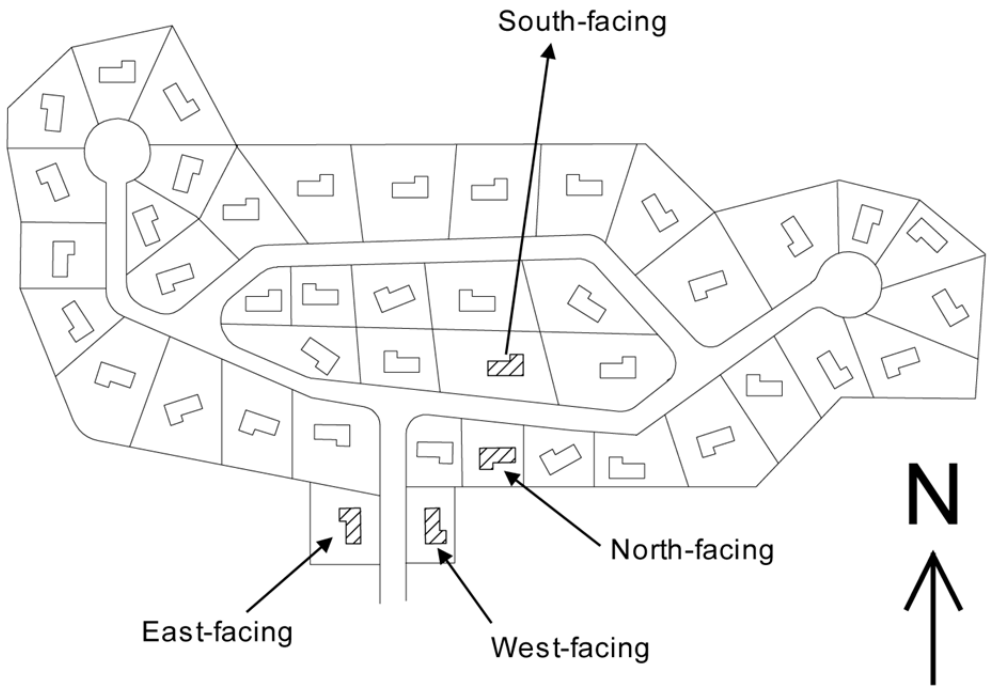

Figure 8-2– Subdivisions and Master Plans Compliance Option

Demonstrate Compliance for Each Cardinal Orientation for Each Basic Model Type

For compliance, submit Certificate of Compliance documentation of the energy budgets for each of the four orientations to the enforcement agency. Only one CF1R form that documents compliance for all four orientations is required to be submitted to the enforcement agency for each unique plan.

Master plans that utilize the multiple orientation alternative, that utilize a compliance approach that requires HERS field verification, must submit a separate copy of the multiple orientation master plan Certificate of Compliance to the HERS provider for every dwelling unit in the subdivision in order to satisfy the requirements of the HERS provider data registry documentation procedures. In practice, the Certificate of Compliance information for each multiple orientation master plan may not need to be submitted to the HERS provider data registry more than one time, but a relationship must be established in the HERS provider data registry between the applicable multiple orientation master plan Certificate of Compliance and the corresponding dwelling-specific Installation Certificates (CF2R), and the dwelling-specific Certificates of Field Verification and Diagnostic Testing (CF3R). Thus, for the multiple orientation compliance approach in a master plan subdivision that has utilized a compliance option that requires HERS verification, the required energy compliance documentation for each dwelling unit should consist of a multiple orientation master plan Certificate of Compliance (CF1R), a dwelling-specific Installation Certificate (CF2R), and a dwelling-specific Certificate of Verification (CF3R).

8.7 HVAC Issues

8.7.1 No Cooling Installed

When a building does not have a proposed cooling system, there is no compliance credit. The air conditioning system is modeled to be equivalent to Package A. A hypothetical cooling duct system is modeled as equivalent to Package A (e.g., Attic, R-6) or as matching the heating system ducts. Modeling no ducts is not an appropriate assumption.

8.7.2 Equipment without SEER or HSPF

For equipment without a tested SEER, the EER is used in place of the SEER. Another option is to use the EER of the equipment and use it for both the SEER and EER entry. If this approach is used, the EER must be verified by a HERS rater.

Equipment without an HSPF rating is assumed to have 3.41 HSPF (electric resistance), 3.55 (electric radiant), or an HSPF calculated from a COP as

HSPF = (3.2 x COP) – 2.4.

8.7.3 Multiple HVAC Systems

Buildings with multiple HVAC systems can be treated in a couple of different ways as follows:

- For buildings that have more than one system type, equipment type or fuel type, where the types do not serve the same floor area, model either the building zone or enter the floor area served by each zone type.
- When multiple system types serve different thermal zones in one building, model each system and its associated thermal zone separately from other systems and zones.

Note that if both zones are associated with attic space then a portion of the attic must be modeled with each zone.

- Floor areas that are served by more than one heating or cooling system, equipment type, or fuel type must be modeled for compliance using the system with the most TDV energy consumption. For any areas served with electric resistance heat and another heating system (except for wood heating) the electric resistance shall be deemed to be the most TDV energy consuming system. The only exceptions to this are supplemental heating units may be installed in a space served directly or indirectly by a more efficient primary heating system. This is allowed if the thermal capacity of the supplement unit does not exceed two kilowatts or 7,000 Btu/h and is if the supplemental unit is controlled by a time-limiting device not exceeding 30 minutes. See §150.1(c)8C.

When there is more than one system meeting the heating or cooling load for the same space, all systems must still meet all the mandatory requirements of the standards.

For example, in a building with an appliance rated gas fireplace in combination with a central gas furnace, the central furnace would be used as the primary system and the fireplace would be treated as the supplemental system. The controls for the fireplace would not need to meet the setback thermostat requirements of §110.2(c) due to the exception.

For rooms such as the bedroom or bathroom, spot heating with a supplemental system may be desirable. Exception to §150.1(c)6 is provided for installing either a two kW electric resistance or 7,000 Btu gas heaters, with a 30-minute timer control for such instances. Therefore, this type of supplemental space heating need not meet the setback thermostat requirement.

8.7.4 Existing + Addition + Alteration Approach

The performance approach may be used to show compliance for alterations in existing buildings, new additions, and Existing + Addition + Alteration discussed in Section 9.7 of this manual.

9. Additions, Alterations and Repairs

9.1 Introduction

This chapter covers key aspects of how the Standards apply to construction of residential additions, alterations to an existing residential building, or both. As explained further below, the Standards do not apply to repairs.

The chapter is organized as follows:

1. **Section 9.1, Introduction.** Highlights the applicable Standards definitions for additions, alterations and repairs; and provides several examples of each.
2. **Section 9.2, What's New in the 2013 Standards.** Highlights of the requirements and compliance options which have changed or are entirely new in the 2013 Standards as compared with the 2008 Standards.
3. **Section 9.3, Compliance Approaches.** An overview of all prescriptive and performance compliance options available to meet the Standards for additions only, for alterations only and for projects which include both additions and alterations.
4. **Section 9.4, Mandatory Requirements.** Mandatory requirements for additions and alterations as they apply to the envelope, fenestration, mechanical system, water heating system, indoor lighting, and outdoor lighting.
5. **Section 9.5, Additions.** Detailed information on prescriptive and performance compliance methods and related information for additions, with or without alterations.
6. **Section 9.6, Alterations.** Detailed information on prescriptive and performance compliance methods and related information for alterations, with or without an addition.
7. **Section 9.7 Performance Method.** An explanation of the Existing + Addition + Alteration Approach with examples.
8. **Section 9.8 Online Registration.** Compliance Forms and Online Registration with a HERS Provider.

Whenever additions and alterations trigger mandatory measures - whether envelope, mechanical, water heating, indoor lighting or outdoor lighting - the Certificate of Compliance and the Mandatory Measures Summary must be submitted with the permit documentation and included in the building plans.

When additions and alterations include changes to the envelope, mechanical and/or water heating systems, a Certificate of Compliance must be completed prescriptively or generated by compliance software with the performance approach. The prescriptive Certificate of Compliance that should be used for additions and alterations in all climate zones is the CF1R-ADD or CF1R-

ALT form. For HVAC-only change-outs and other mechanical system alterations, a climate zone specific CF1R-ALT-HVAC form for prescriptive compliance may be used. Almost all additions and alterations under the 2013 Standards that include changes in HVAC systems also include one or more measures that require HERS Diagnostic Testing and Field Verification. When a HERS measure is specified, the Certificate of Compliance must be registered online with an approved HERS provider web site. Refer to Section 2.2.2 and to Residential Appendix RA2 for more information about document registration.

For copies of the appropriate compliance forms, refer to Appendix A.

Additions

An addition is any change to an existing building that increases conditioned floor area and conditioned volume. See §100.1.

Examples of projects considered as additions include:

1. Adding a conditioned sunroom or other rooms to an existing house;
2. Converting a garage or other existing unheated space into conditioned living space;
3. Enclosing and conditioning an existing patio area;
4. Obtaining a permit to legalize an existing, habitable and conditioned space that was added to a residence without a permit;
5. Adding a bay window that extends to the floor increasing both floor area and volume.

Alterations

An alteration is any change to a building's water-heating system, space-conditioning system, lighting system, or envelope that is not an addition. See §Section 100.1.

Examples of projects considered alterations include:

1. Adding insulation to any existing exterior roof or ceiling, exterior wall, or raised floor over a crawl space, garage or unheated basement;
2. Replacing or installing a new top surface to an existing roofing assembly (re-roofing); replacing portions of or replacing the entire roof assembly;
3. Replacing existing fenestration or adding fenestration area (e.g., windows, bay windows, greenhouse/garden windows, dynamic glazing, clerestories or glass glazed doors) to existing walls;
4. Replacing an existing skylight or increasing the area of skylight to an existing roof;
5. Constructing an entirely new roof over an existing conditioned space;
6. Adding a loft within the existing conditioned volume of a residence;
7. Replacing an existing heating system or adding a heating system (e.g., furnace, wall heater, heat pump or radiant floor);
8. Replacing an existing cooling system or adding a cooling system (e,g., air conditioner or heat pump);
9. Extending or replacing an existing duct system, or adding an entirely new duct system;
10. Replacing the existing water heater or adding water heaters and/or hot water piping;
11. Replacing existing lighting or adding new hardwired lighting fixtures;

12. Adding window film, when complying under the Performance approach only.

Repairs

A repair is "the reconstruction or renewal for the purpose of maintenance of any component, system, or equipment of an existing building. Repairs shall not increase the pre-existing energy consumption of the repaired component, system, or equipment. Replacement of any component, system, or equipment for which there are requirements in the Standards is considered an alteration and not a repair**."** See §100.1.

Note: Repairs to residential buildings are not within the scope of the Standards.

For example, when a component, system, or equipment of an existing building breaks or is malfunctioning and maintenance fixes are needed for it to work properly again, it is considered a repair and not subject to the Standards. However, if instead of fixing the break or malfunction, it is decided to replace the component, system or equipment with a new or different one, the scope of work is considered an alteration and not a repair and requirements of the Standards pertaining the that measure must be met.

Examples of work considered repairs include:

1. Replacing a broken pane of glass but not replacing the entire window;
2. When fenestration and other envelope components are uninstalled for maintenance or repair purposes and the same fenestration or other envelope components are re-installed in the same location, this is considered a repair;
3. When any existing envelope component is moved to a new location (even when that location partially overlaps the item's previous location), the work is considered an alteration;
4. Replacing a failed fan motor or gas valve in a furnace but not replacing the entire furnace;
5. Replacing a heating element in a water heater but not replacing the entire water heater.

Note, replacement of some HVAC components for repairs purposes are defined by the Standards as alterations, therefore triggering requirements that must be met. Section 150.2(b)1E defines the following HVAC component replacements as an alteration that triggers the requirement for duct sealing: *"replacement of the air handler, outdoor condensing unit of a split system air conditioner or heat pump, or cooling or heating coil."* Similarly if more than 40 lineal feet of new or replacement space conditioning ducts are installed the entire duct system must be sealed, tested and verified for low duct leakage §150.2(b)1D.

Example 9-1

Question

A sunspace addition is designed with no mechanical heating or cooling and a glass sliding door separating it from all existing conditioned space. This design is approved by the enforcement agency as non habitable or unimproved space. Under what conditions will the Standards apply to this addition?

Unconditioned Sunspace

Answer

The mechanical and envelope requirements of the Standards do not apply if the space is not considered habitable or improved and therefore can be unconditioned as defined in §100.1; however, per §100.0(c)2, the sunspace must still comply with the applicable lighting requirements of §150.0(k). The sunspace is unconditioned if:

▪ The new space is not provided with heating or cooling (or supply ducts)

▪ All openings between the new space and the existing house can be closed off with weather-stripped doors and windows

▪ The addition is not indirectly conditioned space (defined in §100.1 under CONDITIONED SPACE, INDIRECTLY)

A building official may require a sunspace to be conditioned if it appears to be habitable space, in which case the Standards apply.

Example 9-2

Question

An existing duplex is remodeled, which includes only the installation of new faucets, and bathroom lighting. Do the Standards apply?

Answer

This is an alteration since no new conditioned space is being created, the remodel must comply with applicable mandatory measures described in §110.1 for appliances and §150.0(k) for lighting.

Example 9-3

Question

An existing house is remodeled by adding additional floor area but not increasing the volume of the house. This was accomplished by adding a loft through an area in the house with a vaulted ceiling. As part of this remodel new fenestration are replacing existing ones, and two new windows are being added. Several exterior walls are being opened up to install new wiring. What requirements will apply?

Answer

Since floor area is being added but not conditioned volume, this is an alteration and not an addition. New and replacement fenestration must meet the maximum U-factor and SHGC prescriptive requirements of §150.2(b)1. Newly installed fenestration must also comply with the mandatory measures for caulking/sealing around windows of §110.7. In alterations, the Energy Commission recommends installing insulation to walls being exposed if no insulation was found when the walls were opened; for a 2x4 wood framing use R-13 and for 2x6 wood framing use R-19.

Alternatively, the performance approach may be used to demonstrate compliance for overall building (the entire house) even if individual windows fail to meet the prescriptive requirements, as long as the building meets all applicable mandatory requirements. At this time, since the exterior walls are expose or open, this allows the opportunity to insulate the walls and contribute the ability to meet energy compliance; otherwise it would be difficult to comply with overall building compliance.

9.2 What's New in the 2013 Standards

The 2013 Standards includes new mandatory measures and different compliance requirements for additions and alterations. This section highlights the key changes from the 2008 Standards.

Mandatory Measures in Additions and Alterations

Envelope

Wall Insulation:

1. Walls: exterior walls built with 2x6 or greater framing must have a minimum of R-19 cavity insulation or achieve a U-factor = 0.074. See §150.0(c);
2. Raised-floor insulation: raised floors must have a minimum of R-19 insulation between framing members or achieve the equivalent U-factor as specified in §150.0(d);
3. Fenestration: the area-weighted average U-factor of all new and replacement fenestration must have a maximum value of 0.58; §150.0(q); Exception: up to 10 square

feet or 0.5% of the conditioned floor area, whichever is greater, is exempt from the maximum fenestration U-factor requirement.

HVAC and Water Heating

New piping insulation requirements per Table 120.3A include:

1. All piping with a ¾ inch (19 mm) or larger diameter must be insulated as specified in §150.0(j);
2. All hot water pipes from the heating source to the kitchen fixtures must be insulated as specified in §150.0(j); Exceptions: piping in walls which meet Quality Insulation Installation (QII) criteria; and inaccessible existing piping.

Ducts and Air Distribution Systems

Installation of all new (or full replacement) duct systems:

1. Duct system sealing and leakage testing and field verified per RA3.1.4.3; online registration of the CF1R form with a HERS provider as specified in§150.0(m);
2. Zonally controlled central forced air systems must deliver greater than 350 CFM/ton of nominal cooling and have a fan efficacy less than 0.58 W/CFM; accordance to the procedures as specified in Residential Reference Appendix RA3.3 with online registration of the CF1R form with a HERS provider as specified in §150.0(m);
3. Additions must meet the mechanical ventilation requirements in ASHRAE Standard 62.2 (*not a new requirement*); <u>and</u> the whole building ventilation airflow must be in accordance to the procedures as specified in Residential Reference Appendix RA3.7 with online registration of the Certificate of Compliance with a HERS provider as specified in §150.0(o).

Lighting

1. Simplified requirements for classifying "high efficacy" luminaires (lighting fixtures) per Tables 150.0-A and 150.0-B as specified in §150.0(k);
2. An Energy Management Control System (EMCS) or multi-scene programmable controller may be used to comply with dimmer requirements if specific listed requirements are met. See §150.0(k);
3. An Energy Management Control System (EMCS) may be used to comply with vacancy sensor requirements if specific listed conditions are met See §150.0(k);
4. A minimum of one high efficacy luminaire shall be installed in each bathroom, and all other bathroom lighting shall be high efficacy or controlled by vacancy sensors. See §150.0(k).

Prescriptive Additions

All new size (conditioned floor area) categories and new special requirements for prescriptive additions as outlined in this section and Table 9--3A through 9-3D.

1. Additions ≤ 400 ft2 are allowed a Total Glazing Area up to 75 ft2 or 30% of Conditioned Floor Area, whichever is greater; and have up to 60 ft2 West-Facing Glazing Area. See §150.2(a)1B;
2. Additions > 400 ft2 and ≤ 700 ft2 are allowed a Total Glazing Area up to 120 ft2 or 25% of Conditioned Floor Area, whichever is greater; and have up to 60 ft2 West-Facing Glazing Area, see §150.2(a)1B;

3. Additions > 700 ft2 are allowed a Total Glazing Area up to 175 ft2 or 20% of Conditioned Floor Area, whichever is greater; and have West-facing Glazing Area up to 70 ft2 or 0.5% of Conditioned Floor Area, whichever is greater. See §150.2(a)1.A;
4. Additions > 1,000 ft^2 must meet Package A whole house fan requirements, while Additions ≤ 1,000 ft^2 are exempt. See §150.2(a), EXCEPTION 6 to §150.1(c)12.

   Note: None of the above options allows credit for glazing when removed to make way for the addition.

Prescriptive Alterations

1. The total fenestration area and west-facing area limitations include vertical glazing and skylights;
2. Up to 75 square feet of vertical fenestration is exempt from the total area and west-facing area limitations.

Performance Approach - Existing + Addition + Alterations (E+A+A)

1. Performance compliance may not be used for tradeoffs unless there are at least two or more altered components listed in TABLE 150.2-B;
2. Existing roofs/ceilings removed as part of an addition or alteration -- and all existing skylights being removed as part of the removed roofs/ceilings - <u>are excluded</u> (not modeled) in the Existing + Addition + Alterations performance calculations;
3. Existing exterior walls removed as part of an addition or alterations -- and all existing vertical fenestration (windows, clerestories, glazed doors) being removed as part of the removed walls -- <u>are excluded</u> (not modeled) in the Existing + Addition + Alterations performance calculations;
4. Only "Existing", "Altered" and "New" building components and/or systems are included and modeled in the Existing + Addition + Alterations performance calculations;
5. Existing fenestration not being removed as part of an alteration can now be improved with Window Films and can be modeled in the Existing + Addition + Alterations performance calculations;
6. <u>Without</u> Third Party Verification of the building's existing (i.e., pre-alteration) conditions, the E+A+A approach no longer provides energy credits based on altered components which upgrade (improve) the existing conditions. See §150.2(b)2B and Table 150.2-B;
7. <u>With</u> Third Party Verification of the building's existing (i.e., pre-alteration) conditions, the E+A+A approach still provides energy credits based on altered components which upgrade (improve) the existing conditions. See §150.2(b)2B and Table 150.2-B.

   See Table 9-4 in this chapter for a summary of how the compliance software sets the Standard Design (energy budget) for alterations.

   For further discussion on how Energy Commission-approved 2013 compliance software programs have changed from the 2008 compliance software, see Chapter 8.

9.3 Compliance Approaches

Apart from meeting all applicable mandatory requirements as outlined in Section 9.4, an addition or alteration must also demonstrate energy compliance using a prescriptive or performance method.

There are number of different compliance alternatives or compliance paths to demonstrate that an addition or alteration meets the Standards. Compliance alternatives depend on whether the scope of permitted work is:

1. **Addition Only** where no changes are being made to the existing building except removal of roofs, exterior walls and floors required as a result of the addition; and removal of any fenestration in those same removed roofs and exterior walls to make way for the addition; or
2. **Alterations Only** where there is no addition (i.e., no increase in conditioned floor area and volume); or
3. **Addition and Alterations** where there are both additions and alterations to the existing building.

For each of these permit scenarios, Table 9-1 summarizes the available compliance approaches for low-rise residential additions and alterations.

Table 9-1: Compliance Alternatives for Residential Additions and Alterations

Project Scope	Prescriptive Approach	Performance Approach[1, 2]
1. Addition Only:	Additions ≤400 ft2; or	Addition Alone
	Additions >400 ft2 and ≤700 ft2	
	Additions >700 ft2; or	
2. Alteration Only:	Meet All Applicable Requirements for Prescriptive Alterations	Existing + Alterations Without Third Party Verification of Existing Conditions; or
		Existing + Alterations With Third Party Verification of Existing Conditions; or
		Existing + Alterations as All New Construction
3. Addition and Alteration Combined:	Meet All Applicable Requirements for Prescriptive Alterations and a Prescriptive Addition Approach (see Additions Only above)	Existing + Addition + Alterations Without Third Party Verification of Existing Conditions; or
		Existing + Addition + Alterations With Third Party Verification of Existing Conditions; or
		Existing + Addition + Alterations as All New Construction

1) In the performance method, the building must be modeled with Energy Commission-approved compliance software as explained in Chapter 8 of this Manual.

2) The Existing + Alterations performance approach with or without third party verification may be used only if there are at least two types of altered components in the existing building. This requirement does not apply to the Existing + Addition + Alterations compliance method.

1. ADDITIONS ONLY

Prescriptive

The prescriptive standard requirements for new addition construction are listed in §150.2(a); however, prescriptive additions have some alternative requirements as summarized:

1. **Additions of < 300 ft^2** or less do not require a cool roof to be installed;
2. **Additions ≤ 400 ft^2**: Total glazing area up to 75 ft^2 or 30% of the conditioned floor area, whichever is greater; and up to 60 ft^2 of West-facing glazing area; wall insulation of R-13 is acceptable;
3. **Additions > 400 ft^2 and ≤ 700 ft^2**: Total glazing area up to 120 ft^2 or 25% of the conditioned floor area, whichever is greater; up to 60 ft^2 of West-facing glazing area; and need not exceed R-13 insulation in exterior walls;
4. **Additions > 700 ft^2**: Total glazing area up to 175 ft^2 or 20% of the conditioned floor area, whichever is greater; and up to 70 ft^2 of West-facing Glazing area.

Note that every applicable prescriptive requirement for additions must be met when using the prescriptive approach. Otherwise, the building as a whole must comply using a performance approach.

For prescriptive additions, a Certificate of Compliance (CF1R-ADD) form must be completed and submitted for permit. If any mandatory or prescriptive measures require HERS verification and/or testing, the Certificate of Compliance for the project must be registered online with a HERS provider before submittal to the enforcement agency. Refer to Section 2.5, HERS Field Verification and Diagnostic Testing and Section 2.2.2, Permit Application.

Performance

Additions may comply using the performance approach by meeting the requirements in §150.2(a)2 of the Standards and explained further in Section 9.5.2. The performance options are:

- **Addition Alone**: Only the addition is modeled for compliance, and not the existing building;
- **Existing + Addition as New Construction**. Demonstrating compliance as a whole new building, combining existing plus the addition as all new construction, this approach is usually difficult to achieve, but still an option. Typically this approach is when the addition cannot comply on its own; it would require the existing building to help the addition to comply. Depending on the age of the existing building, the older the building the more revisions or alterations will be required to bring-in the existing and addition into compliance as a whole.

2. ALTERATIONS ONLY

Prescriptive

Alterations may comply prescriptively by meeting all applicable requirements in §150.2(b) of the Standards as explained further in Section 9.5.1 of this manual and summarized in Tables 9-5A and 9-5B. Several prescriptive alteration requirements are specific to the building site climate zone. There are also a number of exceptions to the prescriptive requirements based on either climate zone or other conditions listed in the Standards.

Note: Every applicable prescriptive alteration requirement must be met to use the prescriptive approach; otherwise, the building must comply using a performance approach.

Under the prescriptive alteration approach, the appropriate Certificate of Compliance (e.g., CF1R-ALT or CF1R-ALT-HVAC) form must be completed and submitted for permit. If any mandatory or prescriptive measures require HERS verification or testing (see Section 2.5, HERS Field Verification and Diagnostic Testing of this manual), the Certificate of Compliance for the project must be registered online with a HERS provider (see Section 2.3, Energy Standards Compliance Documentation of this manual) before submittal to the enforcement agency.
ALTERATIONS ONLY

Performance

Alterations may comply using the performance approach by meeting the requirements in §150.2(b)2 of the Standards explained in Section 9.6.2, and summarized in Table 9-1. The main options are:

1. **Existing + Alterations:** When two or more types of components or systems are being altered in the existing building, then the Existing + Alterations performance approach may be used.
2. **Compliance Without Third Party Verification** allows for compliance of the alterations without the need for third party inspection to verify existing conditions being altered;
3. **Compliance With Third Party Verification** allows for compliance of the alterations only with third party inspection to verify existing conditions being altered;
4. **Existing + Alterations** as new construction: Demonstrating alterations compliance as a whole new building is usually difficult to achieve, but still an option. Typically this approach is used is when prescriptive alterations cannot meet the prescriptive requirements in Table 150.1-A.

Note: Every applicable prescriptive alteration requirement must be met to use the prescriptive approach; otherwise, the building must comply using a performance approach.

3. ADDITIONS and ALTERATIONS COMBINED

Prescriptive

When a low-rise residential project includes both an addition and any alterations, the prescriptive requirements for each separate condition must be met for the prescriptive approach to be used. The addition may comply with any of the prescriptive addition options explained above and documented by the appropriate compliance forms (e.g, CF1R-ADD). However, the alterations must also meet all prescriptive requirements, and be documented with the specific compliance forms for alterations (e.g., CF1R-ALT, CF1R-ALT-HVAC).

Performance

The performance path that includes both additions and alterations is the "**Existing + Addition + Alterations**" approach. As explained above (under Alterations Only – Performance), there are two ways to analyze the building using this method: with third party verification of all existing conditions to be altered; and without third party verification. See Section 9.5.2.

9.4 Mandatory Requirements

The mandatory measures apply to all added or altered envelope components as they do to new construction, regardless of whether the prescriptive or performance compliance method is used. This section describes the mandatory requirements for low-rise residential buildings as they apply to additions and alterations. More information on the mandatory measures is in Chapters 3, 4, 5 and 6.

Envelope Measures

Envelope mandatory measures are listed below, including the relevant reference in the Standards and the section number in this manual. The following measures include products and exterior doors, insulation, roofing products and radiant barriers. See Sections 3.2, 3.3, 3.4, 3.5, 3.6, 3.7, and 3.8 for more information.

- Manufactured fenestration products and exterior doors air leakage infiltration rates, see §110.6(a)1, Section 3.5.2;
- Fenestration U-factor, SHGC, VT ratings, see §10-111, §110.6(a)2, 3 & 4, Section 3.5;
- Fenestration temporary and permanent labels, see §110.6(a)5, Section 3.5;
- Fenestration maximum weighted average U-factor = 0.58, see §150.0(q), Section 3.5;
- Installation of field-fabricated fenestration and exterior doors, see §110.6(b), Section 3.5;
- Sealing joints and other openings, see §110.7, Section 3.6;
- Certification of insulating materials, see §110.8(a), Section 3.6;
- Restrictions on use of urea formaldehyde foam insulation, see §110.8(b), Section 3.6;
- Flame spread insulation ratings, see §110.8(c), Section 3.6;
- Insulation placement on roof/ceilings, see §110.8(e), Section 3.6;
- Minimum roof/ceiling insulation, see §150.0(a), Section 3.6;
- Minimum roof/ceiling insulation in an existing attic, see §110.8(d)1 and §150.0(a), Section 3.6;
- Roofing products (cool roofs) solar reflectance and thermal emittance rating and labeling, see §10-113 and §110.8(i);
- Loose-fill insulation, see §150.0(b), see Section 3.6;
- Minimum wall insulation, see §150.0(c), see Section 3.6;
- Minimum floor insulation, see §150.0(d), see Section 3.6;
- Slab edge insulation moisture resistance and physical protection, see §150.0(l), Section 3.6;

- Insulation requirement for heated slab floors, see §110.8(g), Section 3.6;
- Vapor retarder §150.0(g), see Section 3.6.

Ceiling/Roof and Wall Insulation

When insulation is installed in the attics of existing buildings, at least R-30 shall be installed in all climate zones. When ceilings without attics are altered, at least R-19 shall be installed between wood-framing members; or enough insulation shall be installed to achieve the equivalent of R-19 insulation between wood framing members. When the space between framing members becomes accessible as a part of a ceiling/roof modification, the ceiling/roof is considered altered and the insulation measure applies. However, if the roofing surface material is replaced but the roof sheathing is not being removed, there is no insulation requirement.

Existing buildings that already have R-11 insulation installed in framed walls are exempt from the mandatory minimum R-13 or R-19 wall insulation required by §150.0(c) if the building can demonstrate performance method compliance with the walls modeled as R-11.

Roofing Products: (**Cool Roof**)

Roofing products installed either to meet prescriptive requirements or to take performance compliance credit for reflectance and emittance are referred to as "cool roof". These roofing products must be certified by the Cool Roof Rating Council (www.coolroofs.org) per §10-113 and §110.8(i).

To be considered a cool roof the roofing products manufacturer must have its roofing product tested for solar reflectance and thermal emittance, and be listed in the Cool Roof Rating Councils (CRRC) Rated Product Directory. Figure 9-1 provides an example of an approved CRRC product label.

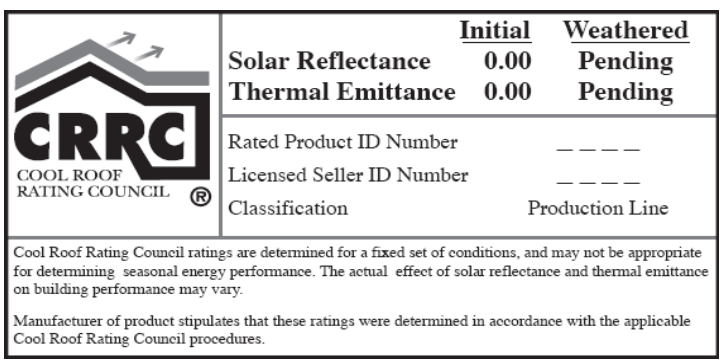

Figure 9-1 CRRC Product label and information

If the aged value for the reflectance is not available in the CRRC's Rated Product Directory then the equation below can be used until the aged rated value for the reflectance is posted in the directory.

Equation 9-1 Aged Reflectance

$$\text{Aged Reflectance}_{calculated} = (0.2+\beta[\rho_{initial} - 0.2])$$

Where:

$\rho_{initial}$ = Initial Reflectance listed in the CRRC Rated Product Directory.
β = soiling resistance value which is listed in Table 9-2

Table 9-2 –Soiling Resistance Value β, By Product Type

PRODUCT TYPE	β
Field-applied coating	0.65
Other	0.70

Fenestration

Fenestration which is new or replacement (altered) glazing – including skylights -- must meet the maximum U-factor requirement in one of three ways:

1. Every fenestration product (glazed opening) meets the mandatory maximum U-factor of 0.58; or
2. All new or replacement fenestration combined meet the mandatory maximum of 0.58 U-factor using an area weighted average calculation; or
3. the area of new and replacement fenestration up to 10 ft^2 or 0.5% of the conditioned floor area (CFA), whichever is greater, is exempt from the U-factor requirement per Exception to §150.0(q).

Example: an existing 2,500 ft^2 house undergoes an alteration with all the existing windows being replaced. The owner may install up to 12.5 ft^2 of new glazing (i.e., up to 0.5% of 2,500 ft^2) without meeting the maximum U-factor of 0.58. If the overall alterations meet the Standards with the prescriptive or performance approach (see Sections 9.6).

Consistent with Exception 1 to §150.1(c)3A: For each dwelling unit, up to 3 square feet of new glazing area installed in doors and up to 3 square feet of new tubular skylight area with dual-pane diffusers shall not be required to meet or be included in the area-weighted average fenestration calculation to meet the mandatory requirement of §150.0(q).

Greenhouse Windows

Greenhouse or garden windows are special windows that project from the façade of the building and are typically five sided structure. An NFRC-rated U-factor for greenhouse windows is typically quite high and may not meet the mandatory requirements for the fenestration U-factor of 0.58.

The three ways to meet this mandatory measure for greenhouse windows are:

1. Must have a maximum U-factor of 0.58 or better; or
2. Use the area-weighted average for all new and replacement fenestration with a combined mandatory maximum of 0.58 U-factor as per §150.0(q)2; or
3. The Exception to §150.0(q)1 for up to 10 ft^2 or 0.5% of CFA, whichever is greater; or
4. When using the performance approach, Exception 1 to s. 150.2(b) states that any dual-glazed greenhouse or garden window installed as part of an alteration complies automatically with the U-factor requirements of s. 150.1(c)3. However, these windows are not exempt from the SHGC requirements of s. 150.1(c)3.

Mechanical (HVAC) and Water Heating Measures

Mechanical (HVAC) system and water heating mandatory measures are listed below for additions and alterations. They include measures applicable to space conditioning equipment, controls and systems; water heaters, controls and systems, pool and spa equipment, controls and systems; outdoor air ventilation; pipe insulation; air ducts and plenums; and fireplaces. See Sections reference below:

1. Appliance efficiencies and verification, see §110.1, Section 4.1.6;
2. Space conditioning equipment efficiencies, see §110.2(a), Sections 4.2.1 & 4.3.1;
3. Heat pump controls, see §110.2(b), Sections 4.2.1;
4. Setback thermostats (in most cases), see §110.2(c), Section 4.5.1;
5. No continuously burning gas pilot lights, see §110.5, Sections 4.2.1 & 5.2;
6. Heating and cooling load calculations, see §150.0(h), Sections 4.2.1 & 4.3.1;
7. Pipe insulation and refrigerant line insulation, see §150.0(j), Section 5.2;
8. Duct insulation and protection of insulation, see §150.0(m), Section 4.4.1;
9. Dampers to prevent air leakage, see §150.0(m), Section 4.4.1;
10. Flexible duct labeling, see §150.0(m), Section 4.4.1;
11. Duct connections and closures, see §150.0(m), Section 4.4.1;
12. Duct system sealing and leakage testing, see §150.0(m)11, Section 4.4.1;
13. Zonally controlled central forced air systems, see §150.0(m)15, Section 4.4.1;
14. Mechanical ventilation for indoor air quality, see §150.0(o), Section 4.6;
15. Fireplaces, decorative gas appliances, gas logs, see §150.0(e), Section 4.2.1;
16. Water Heating Systems, see §150.0(n), Chapter 5;
17. Solar water heating, see §150.0(n)3, Section 5.5;
18. Pool systems and equipment installation, see §150.0(p), Section 5.6.

Mechanical Ventilation

The whole building ventilation airflow requirement in ASHRAE 62.2 is required only in new buildings and in buildings with additions greater than 1,000 ft^2. However, all other mechanical ventilation requirements in §150(o), including local exhaust, must be met, as applicable, in all additions and alterations.

When whole-building ventilation airflow is required for compliance, field verification and diagnostic testing of airflow performance is required in accordance with the procedures in Residential Appendix RA3.7. In that case, a Certificate of Compliance CF1R form must be registered online with a HERS provider (see Section 2.5 and Appendix A).

Lighting Measures

1. Indoor and outdoor lighting mandatory measures are listed below. See Chapter 6 for more information.
2. Lighting fixture (luminaire) requirements, see §150.0(k)1, Section 6.3;
3. Switching devices and controls, see §150.0(k)2, Section 6.5;
4. Lighting in kitchens, see §150.0(k)3, Section 6.6.1;

5. Lighting internal to cabinets, see §150.0(k)4, Section 6.6.1;
6. Lighting in bathrooms, see §150.0(k)5, Section 6.6.2;
7. Lighting in garages, laundry and utility rooms, see §150.0(k)6, Section 6.6.3;
8. Lighting in other rooms such as living rooms, dining rooms, bedrooms, family rooms and closets), see §150.0(k)7, Section 6.6.4;
9. Recessed ceiling fixtures, see §150.0(k)8, Section 6.3.12;
10. Outdoor lighting, see §150.0(k)9, Section 6.7;
11. Internally illuminated address signs, see §150.0(k)10, Section 6.7.4;
12. Garages for eight (8) or more vehicles, see §150.0(k)11, Section 6.7.7;
13. Interior common areas of low-rise multi-family buildings, see §150.0(k)12, Section 6.8.

Altered lighting and any newly installed lighting equipment is required to comply with the residential lighting Standards, which apply to permanently installed lighting (Section 6.3.1) and associated lighting controls.

Only the lighting equipment that is altered needs to comply with the Standards. Existing lighting equipment is not required to be replaced to comply with the Standards.

If a residential kitchen has eight existing luminaires, and only two of them are altered, then only the two altered luminaires need to comply with the Standards. This means, however, that low efficacy lighting cannot be added to an altered kitchen until at least 50% of the lighting in the finished kitchen becomes high efficacy. The newly installed lighting is also required to comply with the switching requirement.

Example 9-4 *[.. this example still to be edited for the 2013 Standards]*

Question

I am doing minor renovations to my kitchen that has six recessed incandescent cans and I am adding a new luminaire over the sink. Does this luminaire have to be a high efficacy luminaire?

Answer

Yes, in kitchens all new luminaires must be high efficacy until at least 50 percent of the total lighting wattage in the finished kitchen comes from high efficacy luminaires, see §150.0(k)3. The high efficacy luminaires also have to be controlled by a separate switch from the low efficacy luminaire, see §150.0(k)2.

An alternative approach to adding an extra switch and wiring is to retrofit all the pre-existing incandescent cans to high efficacy. This can be done with a California Energy Commission certified LED retrofit kit that does not have a screw base. The database of Energy Commission certified LED sources http://www.appliances.energy.ca.gov/QuickSearch.aspx. These kits require the removal of the screw (Edison) base from the luminaire and replacement with another form of electrical connection (such as GU-24 socket and base or quick-connect connectors) Exception to §150.2(b)1I. See sections 6.2.3; 6.3.5; 6.4.6; and 6.9 of the 2013 Residential Compliance Manual for additional information.

Example 9-5

Question

In the kitchen above I am replacing one of the recessed luminaires. Must the new luminaire be high efficacy?

Answer

Yes, the new luminaire is the altered component and must be high efficacy. In fact, all luminaire replacements must be high efficacy until at least 50 percent of the total lighting wattage in the finished kitchen comes from high efficacy luminaires.

Example 9-6

Question

I am completely remodeling my kitchen and putting in an entirely new lighting system. How do the Standards apply to this case?

Answer

When an entirely new lighting system is installed it is treated like new construction. The new lighting system must comply with all of the mandatory kitchen lighting requirements in §150.0(k)3. This includes the following:

At least half the lighting watts must be high efficacy luminaires (lighting internal to cabinets is not included in this calculation);

If all the lighting in the kitchen is controlled by vacancy sensors or dimmers in addition to high efficacy and low efficacy lighting being separately switched, an added 50 W of low efficacy lighting is allowed for dwelling units ≤ 2,500 sf and an added 100 W of low efficacy lighting allowed for dwelling units > 2,500 sf;

High efficacy and low efficacy lighting have to be controlled by separate switches as specified in §150.0(k)2.

Permanently installed lighting internal to cabinets is limited to no more than 20 watts of power per linear foot of illuminated cabinet as specified in §150.0(k)4. The linear foot of cabinet is defined as follows:

A. The horizontal length of the illuminated cabinet; or

B. One vertical length, per illuminated cabinet section, or

C. No more than one vertical length per every 40 horizontal inches of illuminated cabinet.

See section 6.6.1 of the 2013 Residential Compliance Manual for additional information.

Example 9-7

Question

I am replacing my incandescent bath bar in the bathroom. Must the new luminaire meet the Standards requirements?

Answer

It depends if there is already another luminaire in the bathroom that qualifies as high efficacy. If there are no high efficacy luminaires in the bathroom, the bath bar is the altered component and must meet the Standards requirements of §150.0(k)5, which requires at least one high efficacy luminaire in each bathroom. The alternative would be to use a low efficacy bath bar in conjunction with a vacancy sensor and have at least one other luminaire in the bathroom which is high efficacy.

Note that a luminaire with a screw-in lamp, is not considered high efficacy, even if the lamp is LED (light emitting diode) or CFL (compact fluorescent lamp).

Example 9-8

Question

Are there ever situations with a kitchen lighting alteration where I can end up with more than 50 percent low efficacy wattage after the alteration?

Answer

Yes, there is a tradeoff option which allows an additional 50W of low efficacy lighting for houses ≤ 2,500 sf and 100 W for houses > 2,500 sf if vacancy sensors or dimmers are installed to control all of the lighting in the kitchen as specified in Exception to §150.0(k)3. These controls are required in addition to low efficacy lighting being switched separately for high efficacy lighting. See Section 6.6.1 of the 2013 Residential Compliance Manual for more information about the kitchen low efficacy tradeoff option.

9.5 Additions

For a definition of an addition in the Standards, and several useful examples of additions, see the Introduction, Section 9.1 of this chapter.

For a summary of compliance alternatives for additions, see Compliance Approaches, Section 9.2 of this chapter.

Beyond the outline provided in Section 9.2, this section provides more specific information, descriptions and guidelines on how to meet the Standards using each of the available compliance paths. Copies of compliance forms referenced here are included in the Compliance Forms Summary, Appendix A of this manual.

9.5.1 Prescriptive Requirements

In general, the prescriptive requirements apply to additions in the same way they apply to entirely new buildings and must be documented on the CF1R-ADD Form. However, there are a few exceptions as noted below and summarized in Table 9-3A.

There are three prescriptive paths available for additions based on the total conditioned floor area (CFA) of the addition. The total CFA of the addition may include floor areas representing several physically separate additions to the building under the same permit.

Table 9-3A summarizes the key features of the prescriptive envelope requirements for the three prescriptive addition options in §150.2(a)1 of the Standards. Envelope requirements unique to that type of prescriptive addition are shown in bold face on white background. Table 9-3B shows that all prescriptive additions have the same mechanical system and water heating system requirements as the Package A prescriptive measures for new construction listed in §150.1(c) and explained in Chapters 4 and 5.

Additions ≤ 400 ft²

All prescriptive Package A requirements must be met except:

1. Total glazing area may be up to 75 ft² or 30% of conditioned floor area, whichever is greater;
2. West-facing glazing area may be up to 60 ft²;
3. Required exterior wall insulation:
    a. In 2x4 wood frame walls, insulation shall be R-13 or an overall construction assembly U-factor ≤ 0.102, for wood or metal frame walls;
    b. In 2x6 or greater wood frame walls, insulation shall be R-19 or an overall construction assembly U-factor ≤ 0.074, for wood or metal frame walls;
4. No requirement for a whole house fan (WHF) to provide ventilation cooling;
5. For additions ≤ 300 ft² cool roof compliance is not required.

Additions > 400 ft² and ≤ 700 ft² :

All prescriptive Package A requirements must be met except:

1. Total glazing area may be up to 120 ft² or 25% of conditioned floor area, whichever is greater;
2. West-facing glazing area may be up to 60 ft²;
3. Required exterior wall insulation:
    a. In 2x4 wood frame walls, insulation shall be R-13 or an overall construction assembly U-factor ≤ 0.102, for wood or metal frame walls;
    b. In 2x6 or greater wood frame walls, insulation shall be R-19 or an overall construction assembly U-factor ≤ 0.074, for wood or metal frame walls;
4. No requirement for a whole house fan (WHF) to provide ventilation cooling.

Additions > 700 ft²

All prescriptive Package A requirements must be met except:

1. Total glazing area may be up to 175 ft² or 20% of conditioned floor area, whichever is greater;
2. West-facing glazing area may be up to 70 ft² or 5% of conditioned floor area, whichever is greater;
3. If the addition is ≤ 1,000 ft², there is no requirement for a whole house fan (WHF) to provide ventilation cooling;

4. Additions > 1,000 ft^2 must include provide ventilation cooling with a WHF as indicated in §150.1(c)12;
5. If the Total Proposed fenestration area exceeds the Standard Maximum Glazing Area of 20% then the performance compliance approach must be used. Likewise, if the Proposed West-Facing fenestration area in climate zones 2, 4, and 6-16 exceeds 5% of the conditioned floor area, then the performance compliance approach must be used;
6. If the addition has a floor area >700 ft^2 and < 1,000 ft^2, all requirements of Package A apply except the West-Facing Glazing Area may be allow up to 70 ft^2 for additions up to 1,400 ft^2 (since 70 ft^2 is 5% of 1,400 ft^2). See §150.2(a)1A.

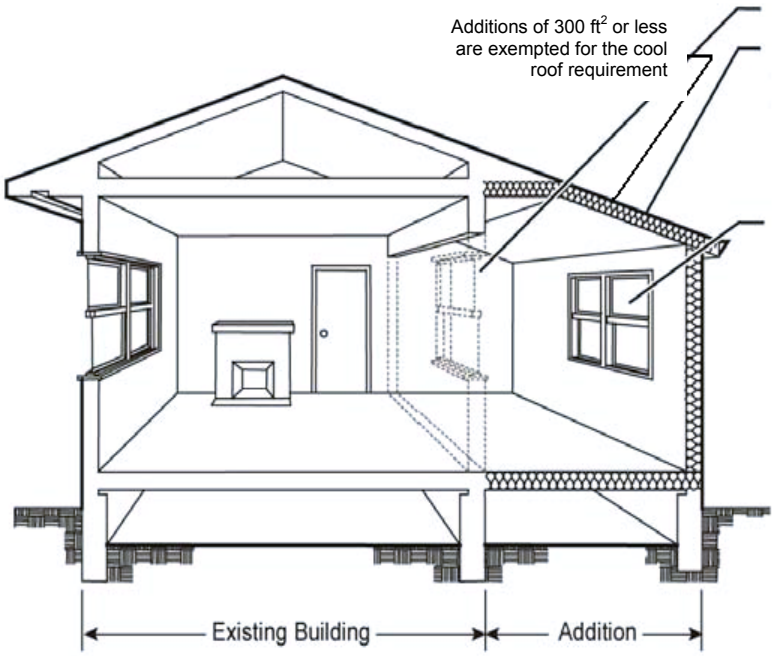

Removed wall and window not included in the calculation.

Insulation requirements from Package A; unless addition is 700 ft^2 or less, then R-13 for 2x4 walls and R-19 for 2x6 or greater walls is acceptable for wood frame.

Fenestration area is limited based on the size of the addition:

- For additions ≤ 400 ft^2: 75 ft^2 or 30% of CFA – whichever is greater -- for total glazing area; and 60 ft^2 for west-facing glazing.
- For additions > 400 ft^2 and ≤ 700 ft^2: 120 ft^2 or 25% of CFA – whichever is greater -- for total glazing area; and 60 ft^2 for west-facing glazing.
- For additions > 700 ft^2: 175 ft^2 or 20% of CFA – whichever is greater -- for total glazing area; and 70 ft^2 or 5% of CFA – whichever is greater - for west-facing glazing.

Figure 9-2 – Prescriptive Addition Envelope Requirements

Compliance Forms for Prescriptive Additions

The permit applicant must submit a completed version of the Certificate of Compliance, CF1R-ADD form, for prescriptive additions when less than 100 ft^2 .

Important note: All projects which require third party diagnostic testing and/or field verification by a HERS rater must also have the CF1R-ADD form uploaded and registered online with a HERS provider (see Chapter 2).

Use the CF1R-ADD form to document fenestration by orientation. The total percentage of fenestration should be no greater than the amount summarized above and in Table 9-3A. West facing area includes skylights tilted to the west or tilted in any direction when the pitch is less than 1:12 (9.5 degrees from the horizontal), and must not exceed 5 percent of the conditioned floor area (CFA) in climate zones 2, 4, and 6-16.

Note: Plan checkers will verify on the CF1R-ADD form that the Total Proposed Glazing Area is less than or equal to the Standard Maximum Glazing Area; and that the Proposed West-Facing Glazing Area is less than or equal to the Standard West-Facing Glazing Area.

Fenestration Exceptions

New fenestration in prescriptive additions must meet the area-weighted average U-factor and SHGC requirements in §150.1(c)3A with the following exceptions particularly relevant to additions:

1. EXCEPTION 1: For each dwelling unit, up to 3 ft^2 of new glazing in doors and up to 3 ft^2 of tubular skylights with dual pane diffusers are exempt;

2. EXCEPTION 2: For each dwelling unit, up to 16 ft^2 of skylights with a maximum U-factor of 0.55 and a maximum SHGC of 0.30 is exempt.

See Section 3.5 for further information on fenestration which meets or is exempt from §150.1(c)3A in new construction.

Other Prescriptive Addition Envelope Measures

For further information on prescriptive envelope measures which are not specific to additions and not highlighted above, see Chapter 3.

Prescriptive Mechanical Measures

For a summary and discussion of prescriptive mechanical requirements when installing new or replacement space conditioning equipment and/or ducts, see Section 9.6.1.

Example 9-9 *[.. this example still to be edited for the 2013 Standards]*

Question

When using the performance approach for the addition alone, do the refrigerant charge requirements in §150.1(c)7A, and fan airflow and watt draw measurements in §150.0(m)13 need to be met for existing central split system air conditioners serving an addition?

Answer

If existing equipment is used to serve the addition, the refrigerant charge, airflow and watt draw requirements do not need to be met as specified by Exception 5 to §150.2(a). However, if added ducts to serve the addition are more than 40 linear feet and they are in unconditioned space, then the ducts must be tested and verified by a HERS rater as described in §150.2(b)1D. All installed ducts regardless of their length and location shall be sealed and meet insulation levels as described in §150.0(m) items 1 through 6.

If a new central split system is installed to serve the addition, it must meet all of the requirements for air conditioners in a new residence.

Table 9-3A: Envelope Roof/Ceiling Requirements for Prescriptive Additions

Component	Requirements of Additions ≤ 400 ft^2	Requirements of Additions > 400 ft^2 and ≤ 700 ft^2	Requirements of Additions > 700 ft^2
Roof/Ceiling Insulation:	Package A: CZ1, 11-16: R-38 / U=0.025; CZ2-10: R-30 / U=0.031	Package A: CZ1, 11-16: R-38 / U=0.025; CZ2-10: R-30 / U=0.031	Package A: CZ1, 11-16: R-38 / U=0.025; CZ2-10: R-30 / U=0.031
Roof Products (Cool Roof):	Package A: Steep-Sloped (> 2:12): CZ10-15: Reflect.=0.20 and Emittance=0.75; or SRI=16	Package A: Steep-Sloped (> 2:12): CZ10-15: Reflect.=0.20 and Emittance=0.75; or SRI=16	Package A: Steep-Sloped (> 2:12): CZ10-15: Reflect.=0.20 and Emittance=0.75; or SRI=16
	Package A: Low-Sloped (< 2:12): CZ13 & 15: Reflect.=0.63 and Emittance=0.75; or SRI=75	Package A: Low-Sloped (< 2:12): CZ13 & 15: Reflect.=0.63 and Emittance=0.75; or SRI=75	Package A: Low-Sloped (< 2:12): CZ13 & 15: Reflect.=0.63 and Emittance=0.75; or SRI=75
	Exception: Additions < 300 ft^2 exempt from all cool roof requirements.		
Radiant Barrier Above Attic:	Package A: CZ2-15: Radiant Barrier above Attic Spaces	Package A: CZ2-15: Radiant Barrier above Attic Spaces	Package A: CZ2-15: Radiant Barrier above Attic Spaces

Table 9-3B: Envelope Glazing Requirements for Prescriptive Additions

Component	Requirements of Additions ≤ 400 ft^2	Requirements of Additions > 400 ft^2 and ≤ 700 ft^2	Requirements of Additions > 700 ft^2
Total Glazing Area:	p to 75 ft^2 or 30% of Conditioned Floor Area, whichever is greater	p to 120 ft^2 or 25% of Conditioned Floor Area, whichever is greater	p to 175 ft^2 or 20% of Conditioned Floor Area, whichever is greater
West-Facing Glazing Area: In Climate Zone 2, 4, 6-16	Up to 60 ft^2	Up to 60 ft^2	Up to 70 ft^2 or 5% of Conditioned Floor Area, whichever is greater
Glazing U-Factor & SHGC[1]:	Package A: All CZs: U = 0.32 CZ 2, 4 & 6-16: SHGC = 0.25	Package A: All CZs: U = 0.32 CZ 2, 4 & 6-16: SHGC = 0.25	Package A: All CZs: U = 0.32 CZ 2, 4 & 6-16: SHGC = 0.25
1. See §150.0(q) and §150.1(c)3 for new and replaced window and skylight exceptions .			

Table 9-3C: Envelope Insulation Requirements for Prescriptive Additions

Component	Requirements of Additions ≤ 400 ft^2	Requirements of Additions > 400 ft^2 and ≤ 700 ft^2	Requirements of Additions > 700 ft^2
Exterior Wall[1] Insulation:	In 2x4 Framing: R-13, U=0.102 In 2x6 Framing: R-19, U=0.074	In 2x4 Framing: R-13, U=0.102 In 2x6 Framing: R-19, U=0.074	Package A: All CZs: U=0.065

Raised Floor[1] Insulation:	Package A: All CZs: R-19 or equivalent U-factor	Package A: All CZs: R-19 or equivalent U-factor	Package A: All CZs: R-19 or equivalent U-factor
Slab Floor[1] Insulation:	Package A: CZ1-15: No Requirement; CZ 16: R-7.0 or U=0.58	Package A: CZ1-15: No Requirement; CZ 16: R-7.0 or U=0.58	Package A: CZ1-15: No Requirement; CZ 16: R-7.0 or U=0.58
1. R-values refer to wood framing and U-factors refer to metal framing.			

Table 9-3D HVAC and Water Heating Requirements for Prescriptive Additions

Component	Requirements of Additions < 400 ft2	Requirements of Additions > 400 ft2 and < 700 ft2	Requirements of Additions > 700 ft2
Ventilation Cooling1 (Whole House Fan)	No Requirement.	No Requirement.	Additions < 1,000 ft2: No requirement Additions > 1,000 ft2: Package A Whole House Fan, §150.1(c)12
Adding New Space Conditioning System(s)	All Package A requirements.	All Package A requirements.	All Package A requirements.
Replacing Existing Space Conditioning System(s)	All Package A requirements.	All Package A requirements.	All Package A requirements.
Adding All New Complete Duct System(s)	All Package A requirements.	All Package A requirements.	All Package A requirements.
Extending Existing Duct System(s) by > 40 Feet	All Package A duct insulation requirements; duct system sealing and HERS Verified	All Package A duct insulation requirements; duct system sealing and HERS Verified	All Package A duct insulation requirements; duct system sealing and HERS Verified
1. (Note: also mandatory mechanical ventilation per ASHRAE 62.2 with HERS verification for additions > 1,000 ft^2)			

Prescriptive Water Heating System

If an addition increases the number of water heaters serving a dwelling unit, then the addition can comply prescriptively if any one of the following conditions contained in §150.2(a)1D.i, ii and iii:

1. The additional water heater is a 50 gallon or less, gas storage or gas

instantaneous, non-recirculating water heater with an EF (Energy Factor) equal to or greater than the federal minimum standards as defined in Section 5.4; or

2. The building does not have natural gas or propane available; and the additional water heater is a 50 gallon or less electric storage tank water heater, or electric instantaneous with an EF equal to or greater than the federal minimum standards; or

3. A water-heating system determined by the Executive Director of the Energy Commission to use no more energy than the one specified in item 1 above; or if no natural gas is connected to the building, a water-heating system determined by the Executive Director to use no more energy than the one specified in item 2 above.

If none of these conditions can be met when adding a water heater to an existing dwelling unit, then the prescriptive addition compliance path cannot be used. In that case, the Existing + Addition + Alterations compliance approach must be used to demonstrate overall compliance with whatever combination of existing and new water heaters serve the dwelling unit. This is summarized in §150.2(a)1D.iv and discussed as part of the overall performance method in Section 9.5.2.

For other alterations to the water heating system that occur as part of an addition, see Section 9.6.

Example 9-10

Question

A small addition of 75 ft² is being planned for a house located in climate zone 7. An existing porch off the master bedroom is being enclosed. The existing heating and air conditioning system will serve the new conditioned space including an extension of less than 40 linear feet of new ducts. The contractor wants to follow the prescriptive requirements. What requirements apply?

Answer

Since the addition is smaller than 400 ft², the total fenestration area is limited to a maximum of 75 ft² and west-facing fenestration area is limited to 60 ft². The fenestration must meet the U-factor and SHGC requirements of Package A. For climate zone 7, these fenestration requirements are a maximum U-factor of 0.32 and a maximum SHGC of 0.25. For an addition of this size, insulation only must meet the mandatory requirements of R-30 ceiling insulation; R-13 wall insulation and R-19 floor insulation. Since the addition is also less than 300 ft^2, there is no cool roof requirement.

Since the existing heating and cooling equipment is being used for the addition, that equipment does not have to meet the mandatory equipment efficiency requirements. Mandatory duct insulation requirements of §150.0(m) apply (including R-6.0 minimum in unconditioned space). All other mandatory requirements in §150.0 must be met.

Example 9-11

Question

If I remove a window from the existing house and re-use this window in an addition to that house, does the relocated window have to meet the prescriptive requirements of Package A?

Answer

Yes, if using prescriptive compliance, in which case the relocated window must be treated as a new window and must meet the U-factor and SHGC requirements of Package A, §150.1(c)3. If you use this existing window in the addition, you must use the actual or default U-factor and SHGC of the window in showing compliance. Therefore, meeting the prescriptive requirements may not be possible, and performance compliance may be the only option. Window certification and labeling requirements of §110.6(a) do not apply to existing used windows.

Relocated windows must also meet the maximum area-weighted average U-factor in §150.0(q) with the EXCEPTION of up to 10 square feet or 0.5% of conditioned floor area, whichever is greater.

Example 9-12

Question

I am doing an alteration in Climate Zone 12 in which I am moving an existing 25 ft^2 window to another location within the same existing wall; and am not increasing total glazing area. Does the re-located window need to meet any prescriptive requirements?

Answer

Removing an area of glazing in an existing wall, and re-inserting up to the same area of glazing in a different opening, is considered replacement fenestration as defined in §150.2(b)1B. Exception 1 to §150.2(b)1B states that up to 75 ft^2 of vertical replacement fenestration in Climate Zone 12 must meet a prescriptive U-factor = 0.40 and an SHGC = 0.35.

Example 9-13

Question

For additions and alterations that include a greenhouse window (also known as garden window), what are the U factor and SHGC requirements? What is the area used for calculations for greenhouse windows?

Answer

For greenhouse windows in alterations, they must also meet the prescriptive U-factor and SHGC requirements of Package A; however, not many greenhouses can meet the new efficiency prescriptive requirements. In the performance approach, any dual-glazed greenhouse or garden window installed as part of an alteration complies with the U-factor requirements, §150.1(b)1B.

Alternatively, Greenhouse windows can also meet the prescriptive maximum area-weighted average U-factor in §150.0(q) with the Exception of up to 10 square feet or 0.5% of conditioned floor area, whichever is greater is allowed. Note For greenhouse windows, the window area is the rough opening.

However, the SHGC for greenhouse windows must meet the requirements shown in the prescriptive Package A, or must meet the SHGC used to show compliance in the performance approach. To meet the SHGC for greenhouse windows, the proposed fenestration may use the NFRC rated SHGC or the default SHGC from Standards Table 110.6-B, if the area weighted average SHGC of the greenhouse window plus other fenestration in the proposed design meets the values used for compliance is also allowed.

For skylights, Exception to §150.1(c)3A, exempts up to two square foot of tubular skylights from the U-factor requirements, provided that the ceiling diffusers are dual-paned; and any additional skylights must meet the U-factor requirements. Skylights may use one of three methods for determining the proposed SHGC:

1) NFRC rated SHGC; or

2) Default SHGC from Standards Table 110.6-B; or

3) If site-built greenhouses then $SHGC_{fen}$ can be calculated from the manufacturer's center of glass SHGC (SHGCc) and using the following equation: $SHGC_{fen} = 0.08 + 0.86 \times SHGCc$.

9.5.2 Performance Method: Addition Alone and Existing + Addition + Alterations Approach

Additions may comply using the performance approach with one of the following compliance paths summarized in Section 9.2, Table 9-1:

1. Addition Alone;
2. E + A + A Without Third Party Verification;
3. E + A + A With Third Party Verification;
4. E + A + A as New Construction.

Energy Commission-approved compliance software is used to model the building as explained in Chapter 8. Whichever compliance path is selected, the Certificate of Compliance (CF1R) generated by the compliance software must be submitted for permit. If the CF1R includes energy measures that require HERS testing or verification, the CF1R must also be registered online with a HERS provider. See Section 2.2.2.

To learn more about what kinds of alterations are assigned energy credit using the Existing + Addition + Alterations performance approach, see Section 9.5.2.

Addition Alone

In this compliance scenario, the addition alone is modeled using the compliance software and the existing building is not modeled at all. This approach may work well when the existing building is not undergoing alterations, and the permitted work scope covers only the addition.

Advantages: Data for the existing building is not needed except for the total existing conditioned floor area which is used to calculate the fractional "number of dwelling units" for the addition. The existing building is not modeled and not analyzed for altered components or systems. This typically saves a large amount of time performing the analysis.

Disadvantages: If the addition includes a large area of glazing or is otherwise deficient in comparison with the prescriptive requirements, it may be difficult to demonstrate compliance under this approach. Alterations to the existing conditions which improve the energy performance of the existing building cannot be used in this approach as "trade-offs" with the addition.

Existing + Addition + Alterations Without Third Party Verification

The existing building with all alterations is modeled together with the addition; and existing conditions are not verified by a third party HERS Rater. The Standard Design that sets the energy budget for this approach is automatically based only on the type of each altered component and not on the existing conditions. Under this performance path the building is modeled as follows:

1. Addition: All new components at the addition and all new systems serving the addition are modeled including roof/ceilings and skylights, exterior walls and glazing (fenestration), raised floors and slab floors, HVAC equipment, ducts and water heating. All these elements are tagged within the compliance software as “New”; or

2. Existing Components to Remain Unchanged: Existing components and systems to remain as is (untouched) are modeled and tagged within the compliance software as “Existing”; or

3. Existing Components to be Altered or Replaced, "Altered”: Each altered component (i.e. a new component which replaces an existing component) is modeled and tagged within the performance compliance program as "altered". Each component or system which remains is modeled and tagged within the compliance software as “Altered” such as, a new water heater that replaces an existing water heater would be labeled "altered”; a new water heater that is added to supplement an existing water heater would be labeled "new". Also, new mechanical equipment that does not replace existing mechanical equipment would be tagged as "new". No verification of existing conditions is required in this compliance path; therefore, no “Existing” (pre-alteration) conditions are specified.

Note: Portions of new fenestration including skylights that will occur in the existing opening of fenestration to be replaced are tagged "altered". Portions of new fenestration that will occur where there is no existing fenestration opening are labeled as "new".

Existing to be Removed:

Existing roof/ceilings to be removed as part of the permitted work, plus any skylights within those removed roof/ceilings, are excluded from the model (i.e., they are completely omitted from the calculations); exterior walls to be removed, and all fenestration areas in those removed walls, are not modeled; and raised floors and slab-on-grade floors to be removed are also omitted.

Note: This is an important change in the E+A+A modeling rules from the 2008 Standards as discussed in Section 9.6.

Advantages: Energy improvements to the existing building that go beyond the Standard Design levels are an energy credit that can be effectively “traded” against features of the addition that are less energy efficient than required by the prescriptive levels that set the Standard Design for the addition alone. For example, an addition with a large glazing area may comply by replacing the existing HVAC system with high-efficiency equipment.

Disadvantages: Detailed plans and other information on the existing building may be difficult to document and obtain. The E+A+A analysis may be relatively complex and time-consuming.

Refer to Table 9-4 for a summary of E+A+A modeling rules.

Existing + Addition + Alterations With Third Party Verification

The existing building with alterations is modeled together with the addition(s); and existing conditions must be verified by a third party HERS Rater before any construction work begins. The Standard Design that sets the energy budget may, depending on the energy efficiency of the altered component or system, be based on the existing conditions. In those instances, energy credit is calculated as a function of the difference between existing conditions and post-alteration energy measures. Under this approach the building is modeled as follows:

1. **Addition:** All new components for the addition and all new systems serving the addition are modeled including roof/ceilings and skylights, exterior walls and glazing (fenestration), raised floors and slab floors, HVAC equipment, ducts and water heating. All these elements are tagged within the compliance software as “New”; or
2. **Existing Components to Remain Unchanged**: Existing components and systems to remain as is (untouched) are modeled and tagged within the compliance software as “Existing”; or
3. **Existing Components to be Altered or Replaced:** "Existing to be Altered: Each altered component (i.e. a new component which replaces an existing component) is modeled and tagged within the performance compliance program as "altered". Each component or system which remains is modeled and tagged within the compliance software as “Altered” such as, a new water heater that replaces an existing water heater would be labeled "altered”; a new water heater that is added to supplement an existing water heater would be labeled "new". Also, new mechanical equipment that does not replace existing mechanical equipment would be tagged as "new". No verification of existing conditions is required in this compliance path; therefore, the “Existing” (pre-alteration) conditions must be specified.

   Note: Removing an area of fenestration in an existing wall or roof, and re-inserting up to the same total area of glazing in different openings, is considered replacement or “altered” fenestration as defined in §150.2(b)1B. Any net glazing area added to the total existing fenestration in an existing wall or existing roof is considered “new” fenestration.

   Removed Surfaces: Existing roof/ceilings to be removed as part of the permitted work, plus any skylights within those removed roof/ceilings, are excluded from the model (i.e., they are completely omitted from the calculations). Exterior walls to be removed, and all fenestration areas to be removed in those walls, are not modeled; and raised floors and slab-on-grade floors to be removed are also omitted.

   Note: This is an important change in the E+A+A modeling rules from the 2008 Standards summarized in Section 9.6.

   Advantages: Energy improvements meeting certain threshold values are credited based on the difference between existing conditions and the altered component or system. These energy credits can be effectively “traded” against features of the addition that are less energy efficient than required by the prescriptive levels that set the Standard Design for the addition alone. For example, an addition with a large glazing area may comply by upgrading insulation levels in the existing house.

   Disadvantages: Detailed plans and other information on the existing building may be difficult to document and obtain. The E+A+A analysis may be relatively complex and time-consuming. And a third party verification must be conducted of all existing conditions prior to construction, and that verification must be registered online with a HERS provider prior to permit submittal.

Refer to Table 9-4 for a summary of E+A+A modeling rules.

Existing + Addition + Alterations as New Construction

A compliance approach rarely used, but available within the Standards, is to model Existing + Addition + Alterations as all "New" components and systems and the compliance software sets the energy budget as if the project were an entirely new building.

1. **Advantages:** Modeling the existing building with alterations and additions as all new makes the performance analysis relatively simple and less time-consuming. This method will provide the owner and designer with an energy efficiency compliance relative to requirements for new construction. Any owner who wants to bring their building up to new construction energy efficiency levels should have their project modeled as "new".
2. **Disadvantages:** The energy budget with this approach is very stringent. Unless a building is going through a complete retrofit of all its envelope components, as well as replacing all mechanical and water heating systems, it is unlikely that the building will meet the Standards with this approach.

Summary of Modeling Rules

Table 9-4 summarizes the basic rules for compliance software users analyzing a residential addition or alteration using the Existing + Addition + Alterations approach. For further information, see the specific compliance software user's manual for details on how to input data correctly.

Table 9-4: Modeling Rules for Existing + Addition + Alterations

Table summarizes basic rules for a low-rise residential building using the Existing + Addition + Alterations performance approach. Note for further details reference the Residential ACM Reference Manual.

Type of Component or System Modeled	Standard Design Without Third Party Verification of Existing Conditions	Standard Design With Third Party Verification of Existing Conditions
"EXISTING" -- Components or Systems That Remain Unchanged	Model each component or system as "Existing"	Model each component or system as "Existing"
"ALTERED" -- Components or Systems Being Changed/Replaced	Model each altered component or system as "Altered" but do not model the "Existing" conditions	Model each component or system as "Altered" and also model the "Existing" conditions
"NEW" -- Components or Systems Being Added	Model each component or system as "New"	Model each component or system as "New"
"REMOVED" -- Components or Systems Being Removed and Not Replaced	These components and systems are omitted entirely from the model (Note: this is a change from 2008 Standards rules)	These components and systems are omitted entirely from the model (Note: this is a change from 2008 Standards rules)

9.6 Alterations

This section provides a road map and a few relevant summaries that identify the Standards requirements which are unique to alterations. Envelope, mechanical and water heating system alterations must meet all applicable mandatory measures as discussed in Section 9.3; and also must comply with the Standards using the prescriptive or performance approach. If a building does not meet all applicable prescriptive measures, see Section 9.5.1), then the performance method using of approved compliance software is the alternative, see Section 9.5.2.

Residential lighting alterations need to meet applicable mandatory measures discussed in Section 9.3.3 since there are no prescriptive lighting requirements in residential buildings.

Prescriptive Requirements

Although alterations must meet many of the same prescriptive requirements for new construction and additions, there are several exceptions or special allowances for certain types of alterations. Table 9-5A provides a detailed outline of envelope requirements for alterations; and Table 9-5B provides a similar outline for HVAC and water heating alterations. For each type of alteration, the tables list:

1. The highlights of the mandatory measures applicable to that kind of alteration; and
2. A summary of the relevant prescriptive measures; and
3. Key exceptions, exemptions or special allowances to the prescriptive measures; and
4. The list of prescriptive compliance forms that must be submitted for permit.

Prescriptive Envelope Alterations

Table 9-5A summarizes requirements for the following types of residential envelope alterations:

1. Adding ceiling or roof insulation to an existing roof; or constructing a new roof on an existing building;
2. Replacing the roof sheathing of an existing roof;
3. Replacing part or all of roof surface of the existing building;
4. Replacing or adding skylights;
5. Adding exterior wall insulation; or constructing new walls in an existing building;
6. Adding raised floor insulation over unconditioned space;
7. Replacing vertical fenestration: windows, clerestories and glazed doors;
8. Adding vertical fenestration: windows, clerestories and glazed doors.

Table 9-5A: For Residential Alterations, Summary of Mandatory and Prescriptive Measures

Type of Envelope Alteration	Highlight(s) of Applicable Mandatory Measures[1]	Summary of Relevant Prescriptive Measure(s)[2]	Exception(s) to the Prescriptive Measures	Prescriptive Compliance Form(s)
Adding Ceiling or Roof Insulation to an Existing Roof; or a New Roof on an Existing Building	Ceiling w/ Attic: R-30, U=0.031	CZ 1, 11-16: R-38, U=0.025	N/A	CF1R-ALT
	Roof Rafters: R-19, U=0.056 §150.0(a)	CZ 2 -10: R-30, U=0.0.031		
Replacing Roof Sheathing	§110.8(j)	CZ 2 - 15: Radiant Barrier above Attic Spaces	No requirement in CZ1 and CZ16	CF1R-ALT
Replacing > 50% of the Existing Roof Surface	§110.8(i)	Steep Sloped (≥ 2:12): CZ 10 - 15: Reflect.=0.20 and Emittance=0.75; or SRI=16	(a) Air space of 1.0" between roof deck and bottom of roofing product; or, (b) Profile ratio of rise to width of 1:5 for >50% width of roofing product; or, (c) Existing ducts in attic insulated and sealed per §150.1(c)9; or, (d) Roof has ≥ R-38 ceiling insulation; or, (e) Roof has a radiant barrier per §150.1(c)2; or, (f) There are no ducts in the attic; or, (g) In CZ10-15, ≥R-4.0 insulation above the roof deck.	CF1R-ALT
		Low Sloped< 2:12: CZ13 & 15: Reflect.=0.63 and Emittance=0.75; or SRI=75	(a) There are no ducts in the attic; or, (b) Reflectance and Roof Deck Insulation R-value in Table 150.2-A are met.	CF1R-ALT
Adding or Replacing Skylight[3]	Weighted average U-factor = or < 0.58 Exemption: Up to 10 ft^2 or 0.5% of Conditioned Floor Area, whichever is greater, is exempt from the U-factor requirement §150.1(q)	Must not exceed the 20% Total or 5% West Fenestration Area with a U-factor = 0.32 (all CZs); in CZ2, 4 & 6-16: SHGC = 0.25 §150.2(b)1.A.	Added fenestration up to 75 ft^2 need not meet Total or West-facing fenestration area as per §150.2(b)1A Exception 1. Replacement skylights up to 16 ft^2 with a U=0.55 and SHGC=0.30 and not meet the total fenestration and West-facing area requirements as per §150.2(b)1 A Exception 2.	CF1R-ALT
Adding Exterior Framed Wall Insulation[3] or a New Wall in an Existing Building	In 2x4 Framing: R-13, U=0.102 In 2x6 Framing: R-19, U=0.074 Exception: Walls already insulated to R-11 §150.1(c)	In 2x4 Framing: R-13, U=0.102 In 2x6 Framing: R-19, U=0.074 (same as Mandatory)	N/A	CF1R-ALT

Table 9-5A: Residential Alterations, Summary of Mandatory and Prescriptive Measures (continued)

Type of Envelope Alteration	Highlight(s) of Applicable Mandatory Measures[1]	Summary of Relevant Prescriptive Measure(s)[2]	Exception(s) to the Prescriptive Measures	Prescriptive Compliance Form(s)
Adding Raised Floor Insulation	R-19 or equivalent U-factor Exception: Floors over controlled ventilation or unvented crawlspaces per §150.1(d)	R-19 or equivalent U-factor (same as Mandatory)	N/A	CF1R-ALT
Replacing Vertical Fenestration[4] (Altered Glazing)	Weighted average U-factor = or < 0.58 Exemption: Up to 10 ft^2 or 0.5% of Conditioned Floor Area, whichever is greater, is exempt from the U-factor requirement §150.0(q)	All CZs: U-factor = 0.32 CZ 2, 4 & 6-16: SHGC = 0.25 §150.2(b)1.B.	Replacement of vertical fenestration up to 75 ft^2: U=0.40 (in all CZs) and SHGC=0.35 in CZs 2, 4 & 6-16 as per §150.2(b)1B Exception 1 .	CF1R-ALT
Adding Vertical Fenestration[4] (New Glazing) and Greenhouse	Weighted average U-factor = or < 0.58 Exemption: Up to 10 ft^2 or 0.5% of Conditioned Floor Area, whichever is greater, is exempt from the U-factor requirement §150.0(q)	Must not exceed the 20% Total or 5% West Fenestration Area U-factor = 0.32 (in all CZs); In CZ2, 4 & 6-16: SHGC = 0.25 §150.2(b)1.A.	Added fenestration up to 75 ft^2 need not meet total or west-facing fenestration area requirements as per §150.2(b)1A Exception 1 . Added Greenhouse must either meet the maximum U-factor of 0.58 or weighted average U-factor of 0.58 or up to 10ft^2 or 0.5% of CFA whichever is greater as per §150.0(q)1.	CF1R-ALT
1: Alterations must comply with all applicable mandatory measures in §110.0 and §150.0 of the Standards as explained in Chapters 3, 4, 5 and 6 of this Manual.				
2: Several prescriptive measures are Climate Zone (CZ) specific.				
3: There are no mandatory measures or prescriptive requirements when altering below-grade or exterior mass walls.				
4: Replacement fenestration is new fenestration that is located in the same existing wall or roof in which the same or larger area of existing fenestration is being removed. It labeled as "altered. Any new fenestration area that increases the total net area of fenestration in any existing wall or roof is labeled as "new".				

Greenhouse Windows

Greenhouse or garden windows are special windows that project from the façade of the building and are typically five sided structure. An NFRC-rated U-factor for greenhouse windows is typically quite high and may not meet the mandatory requirements for the fenestration U-factor of 0.58.

The ways to meet this mandatory measure for greenhouse windows are:

1. Must have a maximum U-factor of 0.58 or better; or
2. Use the area-weighted average for all new and replacement fenestration with a

combined mandatory maximum of 0.58 U-factor as per §150.0(q)2; or

3. The Exception to §150.0(q)1 for up to 10 ft^2 or 0.5% of CFA, whichever is greater; or
4. When using the performance approach Exception 1 as per §150.2(b) - Any dual-glazed greenhouse or garden window installed as part of an alteration complies automatically with the U-factor and meets the requirements as per §150.1(c)3.

Adding Insulation to Existing Roof/Ceilings, Walls and Raised Floors

The prescriptive requirement for alterations is to add the equivalent of the specified level of batt insulation that fits within the cavity of wood framed assemblies:

1. R-38 in attic spaces in climate zones 1 and 11 through 16; and R-30 in attics in climate zones 2 through 10; or
2. R-13 in 2x4 exterior walls, and R-19 in 2x6 or greater exterior walls; or
3. R-19 in raised floors over crawl spaces, over open outdoor areas and over unheated basements and garages.

Replacing the Roof Surface or Roof Sheathing

STEEP-SLOPED ROOFS (≥ 2:12)

In climate zones 10 through 15: if 50% or more of the existing building's roof surface is being replaced, the minimum cool roof requirement for the replaced steep-sloped roofing area is aged solar reflectance = 0.20, thermal emittance = 0.75 or a minimum SRI = 16. These apply unless any of the following is present which are considered equivalent to the cool roof requirements in §150.2(b)1Hi:

1. Air space of 1.0" (25mm) between the roof deck and the bottom of the roofing product; or
2. Roofing product profile ratio of rise to width is at least 1:5 for >50% width of roofing product; or

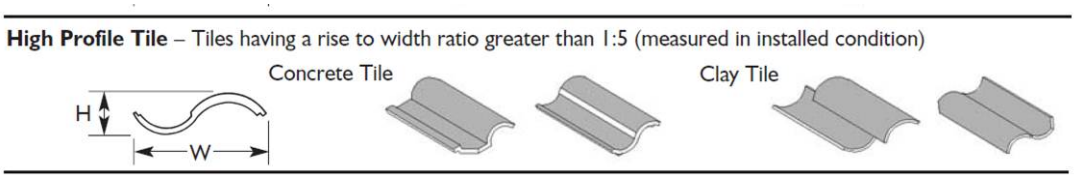

3. Existing ducts in attic insulated and sealed according to §150.1(c)9; or
4. Building has at least R-38 roof/ceiling insulation; or
5. Roof of attic spaces has a radiant barrier according to §150.1(c)2; or
6. There are no ducts in any attic space; or
7. In CZ10 through 15 only: greater than R-4.0 insulation above the roof deck.

LOW-SLOPED ROOFS (< 2:12)

In climate zones 13 and 15: if 50% or more of the existing building's roof surface is being replaced, the minimum cool roof requirements for low-sloped roofs are aged solar reflectance = 0.63, thermal emittance = 0.75 or a minimum SRI = 75 per §150.2(b)1Hii. These apply unless any of the following is present which are considered equivalent to the cool roof requirements in §150.2(b)1Hii:

1. There are no ducts in any attic space; or
2. The aged solar reflectance can be traded off with additional insulation being added at the roof deck as specified in Table 150.2-A

Table 9-6Aged Solar Reflectance Insulation Trade Off Table

Aged Solar Reflectance	Roof Deck Insulation R-value	Aged Solar Reflectance	Roof Deck Insulation R-value
0.62 – 0.60	2	0.44 – 0.40	12
0.59 -0.55	4	0.39 – 0.35	16
0.54 - 0.50	6	0.34 – 0.30	20
0.49 – 0.45	8	0.29 – 0.25	24

ROOF SHEATHING

In climate zones 2 through 15: if roof sheathing over an attic space is being replaced, a continuous radiant barrier must be installed.

Replacement Fenestration

If any fenestration (i.e. windows, skylights, clerestories, and glazed doors) that is being removed and replaced in an exterior wall or roof, it is considered "replacement fenestration".

Example 9-14

Question

An existing building, 50 ft^2 of total 85 ft^2 vertical glazing is being removed from an existing south wall and new glazing will be replaced as part of the alteration in the same opening. What requirements apply?

Answer

Since, 50 ft^2 is treated as "replacement" fenestration and 35 ft^2 is considered existing then the replacement of fenestration must comply with the measures in §150.2(b)1B; or for this example Exception 1 can used. Vertical fenestration not greater than 75 ft^2 can meet the measures by installing fenestration no greater than a U-factor of 0.40 and SHGC of 0.35.

Replacement fenestration is an area of new fenestration which replaces an equal or greater area of glazing removed in the same existing wall or roof area. It is labeled as "altered" fenestration, and it need not occur in the same exact openings as the glazing being removed as long as it is being installed in the same existing wall or roof surface which remains a part of the existing

building. Any added fenestration area that is larger than the total altered glazing area) is labeled as “new”.

New Fenestration in Alterations

The 2013 Standards have relaxed some of the prescriptive restrictions on new vertical fenestration for alterations in existing dwellings. When new vertical fenestration is added in existing dwellings, up to 75 square feet are not required to meet the overall total fenestrations limit (20 percent of the CFA) and the west-facing area limit (5 percent of the CFA). This provides for additional flexibility to meet the Standards requirements using the prescriptive approach, without having to resort to the performance approach. However, this additional fenestration must meet the prescriptive U-factor and SHGC requirements of Package A or meet the U-factor and SHGC requirements of Exceptions 1 and 2 to Section 150.2(b)1B.

Example 9-14

Question

An existing house in climate zone 12 has all single-pane windows. All of the windows will be replaced within existing openings, except a pair of 40 ft^2 French doors to replace an existing 30 ft^2 window. What requirements apply?

Answer

For prescriptive compliance, replacement fenestration (equal to or less than the area of existing windows in each wall being altered) and new additional fenestration area must both meet the U-factor (0.32) and SHGC (0.25) in Package A. The post-alteration total glazing area must be no greater than 20% of conditioned floor area, and all installed fenestration also must meet applicable mandatory measures.

In order to use the performance approach, at two or more energy measure must be used as a trade-off within the house per §150.2(b)2. For example, if the homeowner is replacing the 1) water heater along with 2) window replacements, then the Existing + Alterations calculation is available as a compliance alternative. In that case:

(a) In the Existing + Alterations approach *without* third party verification, replacement fenestration that achieves the fenestration values in Table 150.2-B is compared to those same values in the Standard Design. Replacement fenestration that does not reach these values is penalized; or,

(b) In the Existing + Alterations approach *with* third party verification, replacement fenestration that achieves the fenestration values in Table 150.2-B is compared to Tables 110.6-A and 110.6-B default values for the existing fenestration condition. Replacement fenestration that does not reach these values is penalized:

(c) New for the 2013 is the use of window films in lieu of fenestration replacement. Window films are considered as an alteration option to existing fenestration for energy compliance. Similar to fenestration replacement the window film must also meet the Standard Design for altered component *with* or *without* third party verification as indicated in Table 150.2-B. Also see window film installation protocols in Reference Appendices RA4.2.3.

Example 9-15

Question

An existing building has all single-pane, metal-frame windows. A proposed remodel will replace all the windows; no other work is being done as part of the remodel. What applies?

Answer

Because two or more altered components are required to use the performance method per §150.2(b)2, only the prescriptive path is available to meet the Standards. As a result, the area-weighted average of all replacement windows must meet the requirements of Package A, and new fenestration must also meet applicable mandatory measures of §110.6, §117.0 and §150.0.

Example 9-16

Question

An existing building has all single-pane, wood-frame windows. Two double-pane, metal-frame greenhouse windows will be added as part of a remodel. How should the greenhouse windows be treated?

Answer

Since greenhouse windows add conditioned volume, but do not add conditioned floor area, this remodel is considered an alteration rather than an addition. For the purposes of alterations, any dual-glazed greenhouse windows installed as part of an alteration may use §150.0(q) to meet the U-factor and Package A to meet SHGC requirement.

If two or more types of altered energy measures are in the existing building, the Existing + Alterations performance method may be used as explained above in the answer to Example 9-15. All applicable mandatory measures must be met.

Example 9-17

Question

Why the low-sloped roofing product requirement only listed for Climate Zones 13 and 15?

Answer

These two climate zones are the only climate zones which show energy cost-effectiveness for having a low-slope roofing product (cool roof) requirement.

Example 9-18

Question

Why are there so many exceptions to the addition and alterations section that can be considered equivalents to Roofing Products?

Answer

There are several energy features that have a roughly equivalent or greater impact on energy savings than the cool roof requirements. There are older vintage structures that often have ducts under the house rather than in the attics; and newer homes may have materials just slightly below current requirements or equal to one of the items considered to be equivalent.

Often changing one performance measure in a system can have an impact, sometimes reducing or negating the positive benefit of another. In warm months the main concern is heat gain in the attic negatively impacting ducts, or, by conduction, heating the occupied area ceilings. For example, if the ducts are insulated and air leakage controlled to meet current requirements, energy savings are expected to at least equal the benefit of reflective roof coverings.

Example 9-19

Question

What happens if I have a low-slope roof on most of the house but steep-sloped roof on another portion? Do I have to meet two different criteria for the roofing products?

Answer

Yes. If your house is in climate zones 13 or 15, you will need to meet the low-slope criteria for the areas with low-slope. The areas with steep-slope roof will need to meet the other cool roof criteria.

Example 9-19

Question

I am replacing my existing wood shake roof with asphalt shingles. Would this be considered a repair?

Answer

No. A repair is defined as a reconstruction or renewal for the purpose of maintenance of any component, system or equipment of an existing building. A replacement of any component (i.e. roof top), system, or equipment for which there are requirements in the Standards is considered an alteration and not a repair.

Example 9-21

Question

Where do radiant barriers need to be installed when using the prescriptive Package A or meeting the performance standards where credit is taken for retrofitting a radiant barrier in the existing house?

Answer

The radiant barrier only needs to be installed on the underside of an attic roof assembly and the gable wall ends associated with an addition. The prescriptive requirement is the same for entirely new buildings.

Example 9-22

Question

I am considering doing a reroofing on my house. Under what conditions will I be required to put on a cool roof?

Answer

Cool roof requirements are triggered when 50 percent or more of the roof area is being replaced. Prescriptive requirements are waived if one of the Exceptions to §150.2(b)1H below applies:

Prescriptive Exceptions for Steep-Sloped Roofs

1. Air-Space of 1.0 inch (25 mm) is provided between the top of the roof deck to the bottom of the roofing product; or

2. The installed roofing product has a profile ratio of rise to width of 1 to 5 for 50 percent or greater of the width of the roofing product; or

3. If existing ducts in the attic are insulated and sealed according to § 150.1(c)9 ; or

4. Buildings with at least R-38 ceiling insulation; or

5. If the building has an attic radiant barrier meeting the requirements of §150.1(c)2 ; or

6. Buildings with no ducts in the attic; or

7. If in climate Zones 10-15, R-4 or greater insulation above the roof deck.

Prescriptive Exceptions for Low-Sloped Roofs

1. Buildings with no ducts in the attic; or

2. Aged Solar Reflectance and roof deck insulation R-value in Table 150.2-A are met.

Alternatively, the building may show compliance using the performance approach.

Example 9-23

Question

I am building a 450 ft² addition on my house. Do I have to meet cool roof requirements in the prescriptive package?

Answer

Yes. If using prescriptive compliance the roof must meet the cool roof requirements of Package A for the type of roof slope and density. To avoid the cool roof requirements, you may use the performance approach and tradeoff against other energy efficiency features of the addition alone or the existing building by using the Existing + Addition + Alterations approach.

Prescriptive HVAC System and Water Heating Alterations

The Standards apply to alterations of the heating and cooling system whether or not the alterations correspond to an addition to the building. This section describes the conditions where compliance is necessary and describes the corresponding prescriptive requirements.

If the heating and cooling system is left unchanged as part of an addition or alteration, then compliance with the requirements for altered HVAC systems is not necessary. Extension of an existing heating and cooling system, such as extension of a duct is not considered a change to

the existing heating and cooling equipment therefore the existing heating and cooling system components are unchanged (except the ducts) and do not need to meet the Standards requirements. However, the extensions of the duct systems must meet mandatory requirements described in Section 9.4.2; and prescriptive requirements described below.

Example 9-24

Question

An existing 1,500 ft² single family residence is getting a 500 ft² addition. A new 50 gallon gas water heater will replace the existing water heating system. How do the water heating requirements apply?

Answer

Since this is an alteration to an existing water heating system, no water heating calculations are required for compliance of the addition alone. However, applicable mandatory measures apply. The water heater must have an Energy Factor equal to or greater than the federal minimum standards, or R-12 insulation wrap. The first 5 ft. of hot and cold pipes must be insulated. If building energy compliance is achieved with the Existing + Addition + Alterations calculation, the EF and other energy features of the water heating system are modeled in the performance method.

Example 9-25

Question

An existing 2,000 ft² single family residence has one 50 gallon gas water heater, and a 600 ft² addition with a new instantaneous gas water heater is proposed. How does this comply?

Answer

When there is an increase in the number of water heaters with an addition, the standards allow addition alone compliance in certain circumstances. Since this is an instantaneous gas water heater, it may be installed if it can be demonstrated that it uses no more energy than a 50 gallon gas non-recirculating storage tank (see Prescriptive Water Heating Alterations above). Since §150.1(c)8B declares a single instantaneous gas water heater to be equivalent to a standard 50 gallon storage water heater, then no water heating calculations are required. Mandatory measures apply.

Other alternatives are to show compliance with existing-plus-addition or whole building compliance.

Example 9-26

Question

An existing single family residence with one electric water heater has a 500 ft² addition with a 30 gallon electric water heater proposed. Does this comply?

Answer

When there is an increase in the number of water heaters with an addition, the Standards allow addition alone compliance in certain circumstances. If this residence does not have natural gas connected to the building and the new water heater has an EF equal to or greater than the federal minimum standards, the system automatically complies. No water heating calculations are submitted. If it does have natural gas connected, then the new water heater must be natural gas, or calculations are required to show the proposed water heater would use no more TDV energy than a 50 gallon natural gas water heater with an EF equal to the federal minimum standards.

HVAC "Changeouts"

The Standards make a distinction between two types of HVAC "changeout" situations:

1. Entirely New or Complete Replacement Space Conditioning Systems;
2. Altered Space Conditioning Systems.

The differences in the requirements for these two types of HVAC changeout situations are discussed in the following sections.

A. Entirely New or Complete Replacement Space Conditioning Systems

When an Entirely New or Complete Replacement Space Conditioning Systems is installed, the system must meet all applicable mandatory measures, including:

1. §150.0(h) – Space conditioning equipment loads, design, installation, etc.;
2. §150.0(i) – Thermostat requirements;
3. §150.0(j)2 – Refrigerant line insulation thickness;
4. §150.0(j)3 – Refrigerant line insulation protection;
5. §150.0(m)1 – California Mechanical Code(CMC) compliance;
6. §150.0(m)2 – Factory fabricated duct system UL requirements;
7. §150.0(m)3 – Field fabricated duct system UL requirements;
8. §150.0(m)4 – Duct R-value minimum ratings;
9. §150.0(m)5 – Duct insulation thickness and R-value;
10. §150.0(m)6 – Duct labeling requirements;
11. §150.0(m)7 – Backdraft damper requirements on vent systems;
12. §150.0(m)8 – Gravity ventilation system dampers;
13. §150.0(m)9 – Protection of insulation;
14. §150.0(m)10 – Prohibition of using porous inner core;
15. §150.0(m)11 – Duct system sealing and leakage testing for new systems;
16. §150.0(m)12 – Air filtration requirements;
17. §150.0(m)13 – HSPP/PSPP, mandatory return duct sizing (or diagnostically tested airflow and fan efficacy);
18. §150.0(m)15 – Requirements for zonally controlled systems;

i. These systems must also meet the prescriptive requirements found in:

19. §150.1(c)6 – Allowed heating system types;
20. §150.1(c)7 – *Space heating and cooling system minimum efficiencies and refrigerant charge verification in climate zones 2, 8 through 15.*
21. §150.1(c)9 - Duct insulation requirements;
22. §150.1()10 – Central fan integrate systems added or required as part of an addition or alteration must meet the 0.58 watts per cfm requirement.

These requirements are discussed in detail in Chapter 4, HVAC Requirements.

Note: Completely New or Replacement Duct Systems in *multifamily* dwelling units shall meet the 12% (total leakage protocol), or 6% (leakage to outside protocol) criteria used for newly constructed systems (may also use the smoke test protocol if the system does not meet these criteria). Otherwise, altered duct systems in multifamily dwelling units shall meet the 15% (total leakage protocol), or 10% (leakage to outside protocol), or smoke test criteria given in 150.2(b)1Dii(b).

A system installed in an existing dwelling shall be considered an Entirely New or Complete Replacement Space Conditioning System when:

1. the air handler and all of the system heating/cooling equipment (e.g. outdoor condensing unit and indoor cooling or heating coil for split systems; or complete replacement of a package unit),are new, and
2. *the duct system meets the definition of an Entirely New or Complete Replacement Duct System (including systems less than 40 feet in length).*

An altered duct system installed in an existing home shall be considered an Entirely New or Complete Replacement Duct System when:

1. at least 75 percent of the duct material is new, and
2. any remaining components from the previous system are accessible and can be sealed.

Altered duct systems that do not meet the definition of Entirely New or Complete Replacement Duct Systems shall be considered an Extension of an Existing System.

Space conditioning systems that do not meet the definition of Entirely New or Complete Replacement Space Conditioning Systems shall be considered Altered Space Conditioning Systems.

Altered Duct Systems – Duct Sealing Requirements

Entirely New or Complete Replacement Duct Systems must meet the mandatory requirements of:

1. §150.0(m)12 – Air filtration requirements, and
2. §150.0(m)13 – HSPP/PSPP, mandatory return duct sizing (or diagnostically tested airflow and fan efficacy).

These requirements are discussed in detail in Chapter 4.

Entirely New or Complete Replacement Duct Systems must also be sealed to the criteria for “new duct systems” found in Table RA3.1-2, discussed below.

Because *Entirely New or Complete Replacement Duct Systems* can also include the original air handler, which may leak substantially more than new equipment. An attempt should be made to seal the duct system to meet the 6 percent (of nominal system central fan airflow) leakage rate criteria. If the 6 percent leakage rate criteria cannot be met, a smoke test should be performed to verify that the excess leakage is coming only from the furnace cabinet (air handler cabinet), and not from other *accessible* portions of the duct system. Note that the protocol for Smoke Test of Accessible-duct Sealing given in Reference Residential Appendix RA3.1.4.3.7 makes an exception for the furnace cabinet (air handler cabinet).

Note that this will satisfy the sealing requirement and does not cause the system to no longer meet the definition of an *Entirely New or Complete Replacement Duct Systems.*

Altered duct systems that do not meet the definition of *Entirely New or Complete Replacement Duct Systems* shall be considered an *Extension of an Existing System.* These duct systems are required to meet one of the leakage criteria for "altered existing systems" cases in Table RA3.1-2.

Because duct sealing is a mandatory measure, alterations to an existing duct system, such as adding or replacing sections of duct, will trigger duct sealing. However, cost-effectiveness must also be taken into account. Having to seal an entire system because one foot of duct is being removed may not be cost effective all by itself. The standards set the length of 40 feet of duct as a criterion to trigger this requirement.

If 40 feet of duct are being added or replaced, this work alone can trigger the requirement for duct sealing and field verification. The system would have to meet one of the leakage criteria for "altered existing systems" cases in Table RA3.1-2.

In addition to the duct sealing requirements, the added or replaced ducts must also meet the air distribution requirements of §150.0(m) and the duct insulation requirements of §150.1(c)9. Note that the air distribution and duct insulation requirements must be complied with in all climate zones; however, these requirements apply to only new or replaced ducts, the existing and unaltered ducts do no need to comply with these requirements.

Installing 40 feet or less of new or replacement ducts alone will not trigger the sealing requirements described above; however, the new ducts and connections must still meet the air distribution and duct insulation requirements of §150.0(m) and §150.1(c)9.

Altered Space-Conditioning Systems - Duct Sealing and Insulation

Existing duct systems must be sealed and verified by a HERS rater when portions of the heating and cooling system are altered. The requirement applies in all climate zones.

An air handler is installed or replaced.

Ducts must be sealed (as described below) under any of the following circumstances:

1. An outdoor condensing unit of a split system air conditioner or heat pump is installed or replaced;
2. A cooling or heating coil is installed or replaced;
3. More than 40 feet of new or replacement ducts are installed in unconditioned space

The requirements apply to the duct system that is affected by any one of the alterations listed above. If a residence has more than one duct system, only the ducts connected to the altered equipment need to be sealed and verified.

There are three options for showing compliance for existing duct systems listed below. The rater or installing contractor must at least attempt compliance with the first option (15 percent leakage); then any of the other options can be utilized:

1. Total leakage is less than 15 percent of nominal system fan airflow (RA3.1.4.3.1);
2. Leakage to the outside is less than 10 percent of system fan airflow (RA3.1.4.3.4);
3. If the first option (15 percent) leakage target cannot be met, then compliance can be achieved by sealing all *accessible* leaks verified by a HERS rater inspection. When using this option sampling is not allowed (RA3.1.4.3.5-7).

HERS field verification is required for all options listed above. For options 1, and 2, verification can be accomplished through sampling as described in *Sampling for Additions or Alterations* below. For option 3, sampling is not allowed; a certified HERS rater must do the visual inspection and the smoke test on every house that chooses option 3.

Since test equipment must be set up for the first three options, it may be most efficient to test and record the results for the existing system and then attempt to meet each option sequentially until compliance is achieved.

There are a few cases where duct sealing and duct leakage verification are not required. These exceptions include the following:

1. Ducts that have already been sealed, tested, and certified by a HERS rater;
2. Duct systems with less than 40 ft of duct in unconditioned spaces;
3. Duct systems that are insulated or sealed with asbestos.

B. Accessible Ducts

Several code sections and protocols require a smoke test to demonstrate that all accessible leaks have been sealed.

Accessible is defined Joint Appendix JA1 as “having access thereto, but which first may require removal or opening of access panels, doors, or similar obstructions.”

Ducts located in an attic or crawlspaces are generally considered accessible because code requires access to those spaces. Access is usually gained by opening a door, hatch, or other moveable panel. If this can be done without causing damage that would need to be repaired, this is considered accessible. It is not expected that drywall sections have to be cut or damaged to gain access,

Some judgment is required in determining if ducts are accessible or not. The local code enforcement agency will have the final say when it is not immediately obvious.

For example:

1. If the ducts are buried under insulation, and gaining access to the leaks in these ducts would require substantially disturbing the insulation this is probably not considered accessible;
2. If a leak in the duct system is in too small a space between framing members for an average size person to be able to reach the joint to seal it, then this is probably not considered accessible;
3. If ducts are suspended far above the ground and reaching them would require

scaffolding or special equipment other than normal ladders, then these are probably not considered accessible;

4. If sheet metal ducts are wrapped with insulation and a smoke test indicates multiple small leaks along the lengthwise seams in the ducts in many locations, it is probably not cost effective to remove the insulation to find and seal these leaks. However, if one or more location shows a very obvious and substantial leak, it should be sealed.

All other portions of the duct system for which a smoke test identifies the presence of leakage must be sealed in order to comply. The exemption for inaccessible portions of the duct system is applicable only if the other criteria for duct leakage compliance cannot be met.

The installing contractor may perform a smoke test to locate and seal accessible leaks, or assess whether or not the duct leaks are accessible. However, compliance by smoke test and sealing all accessible leaks must be determined by a smoke test that has been conducted by a HERS rater.

C. Refrigerant Charge Verification

In climate zones 2, and 8-15, when a refrigerant containing component of an air conditioner or heat pump is replaced or installed in an existing building, §150.2(b)1F requires systems that do not have a CID installed to have refrigerant charge field verified in accordance with all applicable procedures specified in Reference **Residential Appendix Sections RA3.2.2, or Reference Residential Appendix RA1.**

The RCV procedures in RA3.2 are not intended to replace the equipment manufacturer's charging procedures and specifications. The installer must first charge the system according to the manufacturer's instructions and specifications. It is important to know that the procedures in RA3.2 are not procedures for *charging* a system; rather, they are procedures for *verifying proper charge*. HERS Raters are not allowed to adjust the refrigerant charge in systems that they are verifying. Raters are also prohibited from performing the weigh-in charge verification procedures. However, when specified by the Standards, a Rater may observe the installer while the installer performs the weigh-in procedure to verify compliance as specified in Section RA3.2.3.2 (described below).

Charge Indicator Display. As an alternative to RCV the installer may install a special device called a charge indicator display (CID). This device provides real-time monitoring of the air conditioning system and will show a warning visible to the home's occupants when the system is either over or undercharged, or if the system airflow rate does not meet the minimum requirement. The display unit must be located within one foot of the thermostat. §150.1(c)7Aib states:

(When applicable, systems shall) be equipped with a charge indicator display (CID) device that provides a clearly visible indication to the occupant when the air conditioner fails to meet the required system operating parameters specified in the applicable section of Reference Joint Appendix JA6 for the installed CID technology. The CID indication display shall be constantly visible and within one foot of the air conditioners thermostat. CID installations shall be confirmed by field verification and diagnostic testing utilizing the procedures specified in Reference Residential Appendix RA3.4.2.

Minimum Airflow**.** When refrigerant charge verification is required for compliance, the system must also comply with the minimum airflow requirement specified in RA3.2.2.7 if the airflow verification protocol in RA3.3 can be applied to the system.

1. Altered HVAC systems must meet the minimum 300 cfm/ton airflow rate compliance criterion; example include but not limited to replacing the outdoor condensing unit, replacing the furnace or air handler, and entire replacement of the duct system.
2. Entirely New or Complete Replacement Space Conditioning Systems, as specified in §150.2(b)1C, must meet the minimum 350 cfm/ton airflow rate compliance criterion or the duct design alternative specified in 150.0(m)13.

Alternative to Refrigerant Charge and Verification requiring at least 300 cfm per ton of airflow. If the altered HVAC that requires RC&V is not able to comply with the 300 cfm per ton of airflow required under subsection Reference Residential Appendix RA3.2.2.7.2, the HVAC installer may choose the alternative procedure outlined in Reference Residential Appendix RA3.2.2.7.3, Alternative to Compliance with Minimum System Airflow Requirements for Altered Systems, provided that the system thermostat is an **Occupant Controlled Smart Thermostat (OCST)** which conforms to the requirements of Reference Joint Appendix JA5.

Under RA3.2.2.7.3, installer must take a series of remedial steps, including but not limited to cleaning filters, removing obstructions from registers and dampers, replacing crushed or blocked ducts, cleaning the evaporator coil, making sure that the air handler is set to high speed and conforms to manufacturer specifications, and enlarging/adding the return duct and the return grill. These steps must be HERS verified by a HERS rater. Again, as mentioned above, when the installer chooses this option, the system thermostat must be an OCST.

Applicability of the protocols. The refrigerant charge verification (RCV) protocols in RA3.2 and RA1 are applicable only to air-cooled air conditioners and air-source heat pumps. Equipment types such as ground source, water source, and absorption air conditioners and heat pumps cannot be verified using the protocols in RA3.2 and RA1. When a system other than an air-cooled air conditioner or air-source heat pump is installed, the requirements in Standards §110.1 may provide further direction for compliance.

If an aspect of the RA3.2.2 or RA1 verification protocol is not applicable to the system, alternative requirements may be specified by applicable subsections of §150.2(b)1F, however the procedures in RA3.2.2 or RA1 that *are applicable to the system* shall be performed.

For example, if a system does not have both a high side and low side refrigerant access port, thus cannot conform to the subcooling or superheat refrigerant charge verification procedure, but is a ducted system that can conform to the airflow measurement protocol; the system must comply with the minimum airflow requirement specified in RA3.2.2.7. Similarly, if the outdoor temperature is below 55°F which precludes use of the RA3.2.2 protocol for verification of the charge, and if the RA1 protocol cannot be used, then the weigh-in charging procedure in Reference Residential Appendix Section RA3.2.3.1 shall be used, and the minimum system airflow rate shall be verified as required by RA3.2.2.7.

The installer must determine which procedures are applicable to a system and verify compliance accordingly.

Thermostats. When an existing system has a refrigerant containing component added or replaced, the thermostat must be upgraded to a digital setback type that meets §110.2(c)

Package Units. Package units are typically pre-charged at the factory prior to shipment. When a new package unit is being installed or is replacing an older unit it may not require RCV if the installer can document that the manufacturer certified correct refrigerant charge at the factory. The installer must submit a certificate of installation documenting this and third party verification of refrigerant charge by a HERS rater is not required. This only applies to new equipment shipped from the manufacturer. Any modification to existing equipment that adds or replaces refrigerant containing components voids the manufacturer's certification. It is also important to note that this does not relieve the contractor from the requirement to verify that the system meets the minimum 300 cfm per ton airflow rate requirement.

Mini-Splits and Other System Types. Some air-cooled air conditioning systems and air-source heat pumps cannot use the standard charge verification procedure, as specified in RA3.2.2, due to the design or construction of the system components. These include certain types of "mini-split" systems and variable speed condenser systems. In these cases, the installer must use the weigh-in charge procedures, as specified in RA3.2.3.1, and these systems must be HERS verified using the, as specified in RA3.2.3.2 procedure for HERS Rater observation of the weigh in charge procedure. These systems must also be equipped with **an Occupant Controlled Smart Thermostat (OCST)** which conforms to the requirements of Reference Joint Appendix JA5.

It is therefore important that the installation of these types of systems be coordinated with the third party verification. When these systems are ducted, they are still subject to the minimum system airflow requirements.

Winter Refrigerant Charge Verification. Most systems will normally be verified using the RA3.2.2 standard charge verification procedure to demonstrate compliance. However, when the outdoor temperature is less than 55°F, and the Standard Charge verification procedure cannot be used, the installer may elect to use the weigh-in charge method to demonstrate compliance. Compliance with HERS verification when the outdoor temperatures are less than 55°F can be demonstrated using one of two alternatives:

1. The installer may use the weigh-in charging procedure, but elect to have the system verified by a HERS rater using the RA3.2.2 Standard Charge Verification procedure at a later time when the temperature is warmer; however, this option can delay the project; or
2. The EXCEPTION to Section 150.2(b)1Fi provides for an alternative HERS verification procedure if the weigh-in method is used. This exception allows the installer to elect to utilize the HERS Rater verification procedure in Reference Residential Appendix Section RA3.2.3.2 in which the Rater observes the installer while the installer performs the weigh-in charging procedure. However, when the HVAC installer elects this procedure for verification, as specified in RA3.2.3.2, the system thermostat must be an

Occupant Controlled Smart Thermostat (OCST) which conforms to the requirements of Reference Joint Appendix JA5.

Weigh-in Procedure During Warm Weather. The installer may also opt to use the weigh-in procedure when the outdoor temperature is at or above 55°F, but in this case the rater must use the standard charge verification procedure.

Weigh-in Procedure Description. The weigh-in procedure involves charging the system by determining the appropriate weight of refrigerant based on the size of the equipment and refrigerant lines rather than by actual performance of the system. Systems utilizing the weigh-in procedure by the installer for any reason may not be third party verified by using sample groups.

There are two basic variations of the weigh-in procedures. One involves the adjustment to the amount of refrigerant in a system by adding or removing a fraction of the refrigerant as specified by the manufacturer (weigh-in charge adjustment). The other involves evacuating the entire system and recharging it with the correct total amount of refrigerant, by weight (weigh-in total charge).

The weigh-in charge adjustment procedure may only be used when a new factory-charged condenser is being installed and the manufacturer provides adjustment specifications based on evaporator coil size and refrigerant line size and length.

The weigh-in total charge may be used for any weigh-in procedure but still requires manufacturer's adjustment specifications.

Standard Charge Procedure Description. The standard charge verification procedure also has two basic variations. One is for systems that have a fixed orifice and the other is for systems that have a variable metering device such as a thermostatic expansion valve (TXV) or electronic expansion valve (EXV).

Both procedures, whether performed by the installer or the rater require that adequate airflow be confirmed prior to verifying charge. If the airflow is less than the minimum requirement of 300 cfm per ton, the system is not operating near its designed capacity or efficiency and the standard charge verification procedure is not valid.

The standard charge verification procedures involve taking refrigerant line temperatures and pressures, calculating equipment performance parameters and comparing those to targets either provided by the manufacturer or obtained from standard tables. All temperature and pressure measurements must be taken using calibrated digital meters. Analog gauges are no longer allowed for refrigerant charge verification procedures due to a lack of accuracy and precision.

In systems that have metering devices, the proper installation and performance can be verified by similar measurements and is an important part of the standard charge verification procedure for systems that have metering devices.

Verifying Minimum System Airflow. The procedures for measuring total system airflow are found in RA3.3. They include plenum pressure matching using a fan flow meter, a flow grid, a powered flow hood and the traditional (non-powered flow hood). The airflow verification procedures for refrigerant charge verification no longer include the temperature split method.

If a system does not meet the minimum airflow requirements, remedial steps may be required to bring the airflow up. More airflow is generally better for systems with air

conditioning. Not only does this allow proper refrigerant charge to be verified, but it also improves the overall performance of the system. When able to be performed on a system, regardless of the refrigerant charge verification procedure, minimum system airflow must always be verified. Note that §150.2(b)1F states that systems must be installed with "all applicable procedures". This includes the minimum system airflow requirements.

In some cases, improving airflow may be cost prohibitive and there is a process for documenting this in RA3.2.2.7.3. When this option is used, verification by sample groups is not allowed.

Temperature Measurements. To properly perform the standard refrigerant charge verification procedure, a means of taking an accurate return air dry-bulb temperature must be provided by the installer. In most systems, this is accomplished by drilling a 5/16" measurement access hole (MAH) in the return side of the air handler or return plenum as shown in Figure RA3.2-1. In some cases the correct location for these holes may not be accessible and an alternative location may be provided as long as an accurate return air temperature measurement of the air as it enters the return side of the equipment can be made.

In other cases, taking the return air dry-bulb temperature at the return grill may be appropriate. This is true when the return is located entirely within conditioned space and not subject to leakage or conduction that may change the temperature of the air after it passes through the return grill and before it enters the evaporator coil. This may also apply to equipment where the return grill is an integral part of the air handler, such as enclosed soffit-mounted air handlers (aka, "pancake units").

Maintaining 70°F Return Air Temperature. During the data collection portion of the standard charge verification procedures, the return air dry bulb temperature, as measured at the MAH, must remain at or above 70°F. This is to ensure proper refrigerant charge conditions, including but not limited to preventing the moisture on the coil from freezing. This requirement may be problematic during cooler outdoor conditions (above 55°F but below 70°F). The return air temperature can be maintained above 70°F by utilizing the home's heating system or supplemental heaters is permissible. <refer to Blueprint language on this topic>. Note that the weigh-in method is always an option for the installer in these cases.

D. Airflow and Fan Efficacy

In all climate zones when an *entirely new or replacement duct system* (refer to section 9.X, above) is installed, the central forced air fan of all ducted air conditioners and heat pumps must simultaneously, in every zonal control mode, demonstrate an airflow of greater than 350 CFM/ton of nominal cooling, and a fan watt draw of less than 0.58 W/CFM in accordance with the procedures in Reference Residential Appendix RA3.3.

As an alternative to the field verified air flow and fan efficacy requirements, the system's return ducts can be sized according to Tables 150.0-C or 150.0-D.

In addition to either the airflow/fan efficacy or return duct sizing alternative, the system installer must provide in the supply plenum, a **hole for the placement of a static pressure probe (HSPP**) or a **permanently installed static pressure probe (PSPP)**, downstream of the evaporator coil that meets the specifications of Residential Reference Appendix RA3.3.1.

<Insert Diagram>

These requirements are mandatory measures and cannot be traded off by using the performance approach.

These requirements are discussed in more detail in Chapter 4 of this manual.

Heating-only space-conditioning systems are not required to meet the prescriptive cooling coil airflow and fan watt draw requirements.

E. Sampling for Alterations

When compliance for an alteration requires field verification and diagnostic testing, the building owners or their agents may choose to have testing and field verification completed for the dwelling unit alone, or as part of a closed sample group of dwelling units for which the same installing company has completed work that requires testing and field verification for compliance.

Registration of the compliance documentation is required and the procedures for registration of compliance documentation must be followed as described in Chapter 2 of this Residential Compliance Manual, and in Residential Reference Appendix RA2.

Notes regarding sampling for alterations:

1. The sample group shall be no larger than seven;
2. The installing company may request a smaller group for sampling;
3. Homes in a sample group must all have the same set of features to be verified (duct testing, airflow/fan efficacy, refrigerant charge, etc.);
4. Homes with systems utilizing the weigh in method for refrigerant charge verification by the installer cannot be sampled;
5. Whenever the HERS rater for the group is changed, a new group will be established;
6. Field verification and diagnostic testing shall be completed by the HERS rater for at least one randomly selected dwelling unit in each group;
7. Re-sampling, full testing and corrective action shall be completed if necessary, as specified by the Residential Reference Appendix RA2.6.3;
8. The installing contractor must self test and register certificates of installation for all features to be tested prior to the rater choosing a home for verification by sampling.

F. Third Party Quality Control Program

An approved Third Party Quality Control Program may serve some of the functions of HERS raters for field verification and diagnostic testing purposes but does not have authority to sign the Certificate of Field Verification and Diagnostic Testing (CF-4R) as a HERS rater, as specified in Residential Reference Appendix RA2.7.

When a Third Party Quality Control Program is used, the HERS rater must still submit completed, signed, registered copies of the CF-4R to the enforcement agency, the installing contractor, and the builder or building owner for all dwellings that must demonstrate compliance.

G. Setback Thermostat

When a split system air conditioner or heat pump is altered by the installation or replacement of any refrigerant containing component and the existing thermostat is not a setback thermostat, then a new setback thermostat must be installed as described in Chapter 4 of this manual and as specified in §150.2(b)1F.

H. Fuel Switching

For prescriptive compliance, new electric resistance heating systems are prohibited in alterations unless the system being replaced is an electric resistance heating system. If the existing system is gas, propane, or LPG, then new electric resistance systems are not permitted. However, changing from a gas, propane, or LPG space heating system to an electric heat pump is allowed as long as the heat pump efficiency meets minimum efficiency standards, and the heat pump installed size is shown to result in no more TDV energy use than the standard design heat pump using the performance method as specified in §150.2(b)1C.

Table 9-7 – Acceptable Replacement Heating System Fuel Source(s)

Existing Heating System Fuel Source	Acceptable Replacement Heating System Fuel Source(s)
Electric	Electric, natural gas, or equipment with efficiency equal to or better than existing system*
Natural gas	Natural gas, or equipment with efficiency equal to or better than existing system* or a heat pump with equal or lower TDV energy use than a standard design system.
LPG	Liquefied petroleum gas, natural gas, or equipment/ system with efficiency equal to or better than existing system* or a heat pump with equal or lower TDV energy use than a standard design system.

*Proof that equipment has an efficiency that is equal to or better than the existing system can be demonstrated by an approved compliance program or other approved alternative calculation method to compare the TDV energy use of the existing system to the proposed system.

Table 9-5B summarizes requirements for the following types of residential mechanical and water heating system alterations:

1. New or complete replacement space conditioning system: all new equipment and all new ducts with more than 40 linear feet of ducts in unconditioned or indirectly conditioned space;
2. Altered space conditioning system with forced air ducts;
3. Altered mechanical cooling system;
4. Altered duct systems: when more than 40 linear feet of new or replacement ducts are installed in unconditioned or indirectly conditioned space;
5. Installed a zonally controlled central forced air system;
6. Replacing water heaters and altering hot water pipes.

Since there are some overlaps in Table 9-5B between a few mandatory and prescriptive measures depending on the kind of alteration, it is important to accurately identify the type(s) of alteration within the permitted scope of work. For example, duct sealing and HERS testing is a mandatory measure when there is a new or complete replacement space conditioning system and greater than 40 linear feet of ducts in unconditioned space. However, when only new or replacement ducts are being installed, and there is no new space conditioning equipment involved, duct sealing and HERS testing is a

prescriptive measure. A key to using Table 9-5B effectively is to have a good understanding of the scope of the proposed alterations.

Example 9-27

Question

Do I have to seal my ducts if I replace my outdoor units in my existing house without changing the indoor unit?

Answer

Yes, replacing the outdoor unit (or indoor unit) by itself will trigger the duct sealing and verification requirement (§150.2(b)1E). However, there are two exceptions that might apply:

1. If the ducts have been previously sealed and verified as sealed, the ducts do not have to be sealed again and re-verified.

2. Less than 40 linear feet of the duct system is located in unconditioned spaces such as attics or crawl spaces.

Example 9-28 *[.. this example still to be edited for the 2013 Standards]*

Question

I have an existing electric furnace and I'm adding a new bedroom. Can I extend the existing ducts to the new room and use the existing furnace?

Answer

Yes. If ducts are extended from an existing space conditioning system §150.2(b)1D allows the existing system but requires duct sealing if more than 40 linear feet of the new duct system is located in unconditioned or indirectly conditioned space such as in an attic or crawl space. . The existing furnace must have adequate heating capacity to meet California Building Code requirements for the additional space.

Example 9-29

Question

I am adding a bedroom to an existing house which uses a central forced air natural gas furnace. I would like to heat the room with an electric resistance baseboard heater rather than extend the existing ductwork to reach the new space. Is this allowed?

Answer

No. If using prescriptive compliance and since the existing system is gas, the addition cannot use an electric heating system. Options for heating the space include:

Extending the existing natural gas furnace system as long as there is adequate capacity to meet the California Building Code requirement;

Heating the added bedroom with an electric resistance heater is allowed if the performance approach is taken and the relatively high TDV energy consumption of the electric resistance heater is made up by TDV energy reductions from energy efficiency measures in the addition or in an accompanying alteration.

Note: If there are more than 40 linear feet of added ducts being located in unconditioned or indirectly conditioned space, then the ducts must be sealed, tested and the ducts must be verified as sealed by a HERS rater.

Example 9-30

Question

My central gas furnace stopped working. Since it is about 30 years old I decided to get a new more efficient unit rather than repair the existing one. What are the requirements?

Answer

Mandatory requirements apply to the components being replaced. The furnace, of course, must meet minimum efficiency requirements, but all systems sold in California should already meet the minimum efficiency requirements. If the existing thermostat is not a setback thermostat, it must be replaced with a setback thermostat, as specified in §150.2(b)1F that meets the requirements described earlier in this chapter.

All new ducts must meet insulation and construction requirements. In climate zones 2, 9-16, all existing and new ducts must be sealed and HERS verified, as specified §150.2(b)1E.

Prescriptively, the new heating unit must also be a natural gas unit.

The performance approach could be applied but only if the alteration includes *"tradeoffs between two or more altered components that are listed in TABLE 150.2-B"* (insulation, fenestration, space conditioning equipment, air distribution systems, water heating system, roofing and other measures). Thus if other alterations are also being done one could specify other heating equipment such as heat pumps, electric resistance etc as long as the overall project has a lower TDV energy consumption than the "standard design" efficiency. When using the performance approach one can decide to either use the default standard design efficiencies that the alteration is compared against. Alternately one can hire a HERS rater to document the existing efficiencies and these existing efficiencies can be used in the standard design of performance calculation.

Example 9-31

Question

As part of an upgrade in an existing house, one of the ducts is being replaced because of deterioration of the insulation and jacket. What requirements apply to the replacement duct?

Answer

This is an alteration since no new conditioned space is being added. The mandatory measures for ducts apply. If more than 40 ft of altered duct is in unconditioned or indirectly conditioned space, then the requirements of §150.2(b)1D require diagnostic testing and HERS verification of the whole duct system.

Example 9-32

Question

An up-flow air-handling unit with a furnace and air conditioning coil is located on a platform in the garage of an existing house. The platform is used as a return air plenum. The air-handling unit is being replaced and the platform is being repositioned to the corner of the garage (3 feet away from the current location). What requirements apply to this alteration?

Answer

The mandatory requirements apply to this alteration. In particular, §150.0(m) prohibits raised platforms or building cavities from being used to convey conditioned air (including return air and supply air). When the platform is relocated, it is being altered, and the mandatory requirement applies. Ducts made from sheet metal, duct board or flexible ducts must be installed to carry the return air to the replaced air handler. This requirement would not apply if the platform were not being altered.

In addition since the air handler is being replaced the prescriptive duct sealing requirements apply per §150.2(b)1E , unless the ducts have been previously sealed and confirmed through verification or there is less than 40 linear feet of ducts in unconditioned spaces.

Example 9-33

Question:

What is meant by the term "air handler"?

Answer:

The term "air handler" is used to identify the system component that provides the central system forced air movement for the ducted heating or cooling space-conditioning system. The term "air handler" may be properly used to identify various types of central system forced air-moving components that must meet the functional requirements for different types of space-conditioning systems. For instance: A "gas furnace" air handler includes a gas combustion heat exchanger, and the central system fan, but does not include a DX cooling coil; An "electric furnace" air handler has electric heating coils, and the central system fan, but does not include a DX cooling coil; A "fan-coil unit" air handler for a split system heat pump has a DX cooling/heating coil and the central system fan; A hydronic heat pump air handler includes the air-side DX coil, compressor, water-cooled condenser, and the central system fan. There are other air handler configuration variations as well.

Example 9-34

Question

I have a residential building that was constructed in the 1920's. It has a freestanding gas furnace and I want to change it to an electric wall heater. Is this permitted?

Answer

No. §150.2(b)1Cii states that the new space-conditioning system be limited to natural gas, liquefied petroleum gas, or the existing fuel type unless it can be demonstrated that the TDV energy use of the new system is more efficient than the existing system. For your situation you would have to use gas or a heat pump for compliance.

Example 9-35

Question

What are the Standards requirements for Duct Sealing, Duct Insulation, Refrigerant Charge Verification (RCV), System Airflow (CCA), Fan Efficacy(FE), and Measurement Access Holes (MAH), Hole for the placement of a Static Pressure Probe (HSPP) or Permanently installed Static Pressure Probe (PSPP) for the following changeout scenarios in an existing home?

1. New or replacement outdoor condensing unit and/or indoor cooling or heating coil only (no duct alteration);
2. New or replacement furnace heat exchanger only (no duct alteration);
3. New or replacement air handler unit only (no duct alteration);
4. New or replacement entire duct system only (no air handler alteration);
5. New or replacement entire duct system and air handler only;
6. New or replacement entire duct system and outdoor condensing unit, and indoor cooling or heating coil (no air handler alteration);
7. New or replacement entire duct system, outdoor condensing unit, indoor cooling or heating coil, and air handler (i.e. entire space conditioning system);
8. New or replacement entire duct system and packaged air conditioner or heat pump (i.e. entire space conditioning system);
9. New or replacement packaged air conditioner or heat pump (no duct alteration);
10. More than 40 ft of new or replacement ducts installed (but not replacing the entire duct system as in #4 above) in unconditioned space (no other alteration).

Answer

1. Duct sealing < 15% §150.2(b)1E, Equip §150.2(b)1F, RC, CCA ≥ 300 CFM/ton, MAH;
2. Duct sealing < 15%, §150.2(b)1E, Equip §150.2(b)1F, RC, CCA ≥ 300 CFM/ton, MAH;
3. Duct sealing < 15% §150.2(b)1E, Equip §150.2(b)1F, RC, CCA ≥ 300 CFM/ton, MAH;
4. Duct sealing <6% §150.2(b)1Di, Duct Insulation, CCA ≥ 300 CFM/ton;
5. Duct sealing < 6% §150.2(b)1Di, (§150.2(b)1E), Equip §150.2(b)1F, Duct Insulation, RC, CCA ≥ 300 CFM/ton, MAH;
6. Duct sealing < 6% (§150.2(b)1Di), (§150.2(b)1E), Equip §150.2(b)1F, Duct Insulation, RC, CCA ≥ 300 CFM/ton, MAH;
7. Duct sealing < 6% §150.2(b)1C) Duct Insulation, RC, CCA ≥ 350 CFM/ton, FWD ≤ 0.58 watt/CFM, TMAH, STMS, and either HSPP or PSPP;
8. Duct sealing < 6% percent §150.2(b)1C, Duct Insulation;
9. Duct sealing <15% §150.2(b)1E, Equip §150.2(b)1F;
10. Duct sealing <6% (§150.2(b)1Dii), Duct Insulation.

Table 9-8 Summary of Prescriptive HVAC & Water Heating Alterations

Type of Mechanical System Alteration	Highlight(s) of Applicable Mandatory Measures [1]	Summary of Relevant Prescriptive Measure(s)	Exception(s) to the Prescriptive Measures	Prescriptive Compliance Form(s)
New or Complete Replacement Space Conditioning System (New Equipment and All New Ducts > 40 ft. in Unconditioned or Indirectly Conditioned Space)	New equipment must meet all minimum efficiency and other requirements in Sections 150.0(h), 150.0(i), 150.0(j)2, 150.0(j)3, 150.0(m)1 thru 11: duct sealing & HERS testing with forced air duct systems	All requirements of Section 150.1(c)6,7,9 & 10; and heating system limited to natural gas, LPG or existing fuel type	Exemption from fuel type requirement if new system can be shown to use less TDV energy than the existing system.	CF-1R-ALT or CF-1R-ALT-HVAC; MF-1R *(CF-1R must be registered w/ a HERS Provider)*
Altered Space Conditioning System with Forced Air Ducts	New equipment must meet all the minimum efficiency and other requirements in Sections 150.0(h), 150.0(i), 150.0(j)2, 150.0(j)3, 150.0(m)1 thru 11	Duct sealing & HERS testing per Section 150.2(b)1.E	(1) Duct systems documented as previously sealed and HERS tested; or, (2) Duct systems with < 40 lineal feet in unconditioned spaces; or, (3) Existing duct system constructed, insulated or sealed with asbestos	CF-1R-ALT or CF-1R-ALT-HVAC; MF-1R *(CF-1R must be registered w/ a HERS Provider)*
Altered[5] Mechanical Cooling (Refrigerant-Containing) System	New equipment must meet all the minimum efficiency and other requirements in Sections 110.2(c), 150.0(h), 150.0(i), 150.0(j)2, 150.0(j)3, 150.0(m)1 thru 11	In CZ2, 8-15: refrigerant charge per RA3.2.2 and & HERS testing per Section 150.2(b)1.F.i.a.; or refrigerant weigh-in charging per RA3.2.3.1 & HERS testing	(1) Packaged systems w/ correct, verified and documented refrigerant charge by manufacturer do not require HERS testing (2) When outdoor temperature < 55° F. and refrigerant weigh-in charging used and HERS test RA3.2.3.2 used, system thermostat must be Demand Response.	CF-1R-ALT or CF-1R-ALT-HVAC; MF-1R *(CF-1R must be registered w/ a HERS Provider)*
Altered Duct Systems: When > 40 ft. of New or Replacement Ducts are Installed in Unconditioned or Indirectly Conditioned Space	New ducts must meet applicable portions of Sections 150.0(m)1 thru 11 including duct insulation in Table 150.1-A. Entirely new and complete replacement duct systems must meet additional requirements in Sections 150.0(m)12 & 13.	*New or Replacement Duct System*: duct sealing & HERS testing per Section 150.2(b)1.D.ii.a. *Extension of Existing Ducts By > 40 ft*: HERS testing of existing duct system per Section 150.2(b)D.ii.b.	*Exception to 150.2(b)D.ii.b. Duct Sealing:* when existing duct system is constructed, insulated or sealed with asbestos.	CF-1R-ALT or CF-1R-ALT-HVAC; MF-1R *(CF-1R must be registered w/ a HERS Provider)*

Note 1: Alterations must comply with all applicable mandatory measures in Sections 110 and 150 of the Standards as explained in Chapters 3, 4, 5 and 6 of this Manual.
Note 5: Non-setback thermostats must be replaced with setback thermostats per Section 110.2(c) when alterations include intallation or replacement of the compressor, condensing coil, evaporator coil, refrigerant metering device or refrigerant piping.

Table 9-8 Summary of Prescriptive HVAC & Water Heating Alterations (cont.)

Type of Mechanical System or Water Heating Alteration	Highlight(s) of Applicable Mandatory Measures [1]	Summary of Relevant Prescriptive Measure(s)	Exception(s) to the Prescriptive Measures	Prescriptive Compliance Form(s)
Installing Zonally Controlled Central Forced Air System	Airflow > 350 CFM/Ton cooling, Fan < 0.58 W/CFM: HERS testing *Section 150.1(m)15*	Bypass ducts that deliver conditioned supply air directly to the return duct airflow may not be used. *Section 150.1(c)13*	N/A	CF-1R-ALT or CZ-Specific CF-1R-ALT-HVAC; MF-1R *(CF-1R must be registered w/ a HERS Provider)*
Replacement Water Heaters and Altered Piping	New equipment must meet minimum efficiency and other requirements in Sections 110.1, 110.3 and 150.0(j)2 Exception to 150.0(j)2: Inaccessible piping requires no insulation	(1) A natural gas or propane water heater that meets the requirements of Section 150.1(c)8 with no recirculation system; or, (2) If no natural gas is connected to the building: an electric water heater with an Energy Factor = or > that required by the Appliance Efficiency Regulations and a storage tank < or = 60 gal and no recirculation system	According to a calculation method approved by the CEC: Any water heating system that uses no more TDV energy than the prescriptive natural gas/propane water heater; or. when no natural gas is connected to the building, any water heating system that uses no more TDV energy than the prescriptive electric water heater.	CF-1R-ALT; or CF-1R-ALT-HVAC; MF-1R

Note 1: Alterations must comply with all applicable mandatory measures in Sections 110 and 150 of the Standards as explained in Chapters 3, 4, 5 and 6 of this Manual.

Table 9-9: Residential Alteration, Summary of Mandatory and Prescriptive Measures

Type of Mechanical System Alteration	Highlight(s) of Applicable Mandatory Measures[1]	Summary of Relevant Prescriptive Measure(s)	Exception(s) to the Prescriptive Measures	Prescriptive Compliance Form(s)
New or Complete Replacement Space Conditioning System **(New Equipment and All New Ducts > 40 ft. in Unconditioned or Indirectly Conditioned Space)**	New equipment must meet all minimum efficiency and other requirements in §150.0(h), 150.0(i), 150.0(j)2, 150.0(j)3, 150.0(m)1 thru 11: duct sealing & HERS testing with forced air duct systems	All requirements of §150.1(c)6,7,9 & 10; and heating system limited to natural gas, LPG or existing fuel type	Exemption from fuel type requirement if new system can be shown to use less TDV energy than the existing system.	CF1R-ALT or CF1R-ALT-HVAC; (CF1R must be registered w/ a HERS Provider)
Altered Space Conditioning System with Forced Air Ducts	New equipment must meet all the minimum efficiency and other requirements in §150.0(h), §150.0(i), §150.0(j)2, §150.0(j)3, §150.0(m)1 thru 11	Duct sealing & HERS testing per §150.2(b)1.E	(1) Duct systems documented as previously sealed and HERS tested; or, (2) Duct systems with < 40 lineal feet in unconditioned spaces; or, (3) Existing duct system constructed, insulated or sealed with asbestos	CF1R-ALT or CF1R-ALT-HVAC; (CF1R must be registered w/ a HERS Provider)
Altered[(5)] Mechanical Cooling (Refrigerant-Containing) System	New equipment must meet all the minimum efficiency and other requirements in §110.2(c), §150.0(h), §150.0(i), §150.0(j)2, §150.0(j)3, §150.0(m)1 thru 11	In CZ2, 8-15: refrigerant charge per RA3.2.2 and & HERS testing per §150.2(b)1.F.i.a.; or refrigerant weigh-in charging per RA3.2.3.1 & HERS testing	(1) Packaged systems w/ correct, verified and documented refrigerant charge by manufacturer do not require HERS testing (2) When outdoor temperature < 55o F. and refrigerant weigh-in charging used and HERS test RA3.2.3.2 used, system thermostat must be Demand Response.	CF1R-ALT or CF1R-ALT-HVAC; (CF1R must be registered w/ a HERS Provider)
Altered Duct Systems: **When > 40 ft. of New or Replacement Ducts are Installed in Unconditioned or Indirectly Conditioned Space**	New ducts must meet applicable portions of §150.0(m)1 thru 11 including duct insulation in Table 150.1-A. Entirely new and complete replacement duct systems must meet additional requirements in §150.0(m)12 & 13.	New or Replacement Duct System: duct sealing & HERS testing per §150.2(b)1.D.ii.a. Extension of Existing Ducts By > 40 ft: HERS testing of existing duct system per §150.2(b)D.ii.b.	Exception to 150.2(b)D.ii.b. Duct Sealing: when existing duct system is constructed, insulated or sealed with asbestos.	CF1R-ALT or CF1R-ALT-HVAC; (CF1R must be registered w/ a HERS Provider)

9.7 Performance Method: Existing + Additions + Alterations

Alterations may meet the Standards using the performance approach with any one of the following compliance paths summarized in Section 9.2, Table 9-1:

- *Existing + Addition + Alterations Without Third Party Verification*
- *Existing + Addition + Alterations With Third Party Verification*
- *Existing + Addition + Alterations as New Construction*

For a detailed explanation of each of these compliance alternatives, refer to Section 9.5.2. When there is no addition, the performance calculations model the existing building, all altered components to remain and any new components (see Section 9.5.2 and Table 9-4).

When there is no addition and only alterations to an existing building, this compliance path is allowed only when there are two or more types of altered components as stated in §150.2(b)2.

Energy Commission-approved compliance software is used to model the building as explained in Chapter 8 of this manual. Whichever compliance path is selected, the Certificate of Compliance (CF1R) generated by the compliance software must be submitted for permit. If the CF1R includes energy measures that require HERS testing or verification, the CF1R must also be registered online with a HERS provider (see Section 2.2.2).

Example 9-36

Question

A 1,600 ft² house built in 1980 in climate zone 12 is being renovated as follows:

1. A 500 ft² room will be added, including 120 ft² of new windows;
2. A 200 ft² wall and 100 ft² of old window will be removed;
3. Attic insulation in the existing house will be upgraded to R-38; and
4. The addition will be connected to the existing HVAC and duct system.

If the performance approach is used to demonstrate compliance, how does the compliance software establish the standard and proposed designs?

Answer

Table 9-4 summarizes the Modeling Rules for Existing + Addition + Alterations which must be followed to have the compliance software accurately set the standard design and model the proposed design. Under the 2013 Standards performance rules, the 200ft² wall removed and the 100 ft² of old window within it are not included in the energy model and will have no impact on the standard design. The standard design for the addition portion is set using the prescriptive requirements of §150.1(c). If the existing duct system is extended by 40 linear feet or more, the standard design assumes the duct alterations requirements summarized in Table 9-5B.

The standard design assumptions for the existing house follow the rules summarized in §150.2(b)2 and Table 150.2-B based on whether there is a third party verification of the existing conditions. Without third party verification, upgraded energy components in the existing house are modeled as fixed assumptions in the standard design that represent levels of efficiency reasonably expected for each altered component. If the energy analyst using the compliance software selects third party verification of energy components in the existing house to be upgraded (see Section 9.5.2), the standard design assumes the existing conditions for those components to be as part of the alterations.

If the proposed design including Existing + Addition + Alterations does not pass, other energy components of the existing building and/or the addition may have to achieve compliance. For example, the water heater or the HVAC equipment in the existing portion of the house may be upgraded to achieve additional credits towards compliance. In the addition, higher performing windows and higher levels of roof and wall insulation may also be used to achieve compliance.

Example 9-37

Question

For the 1980 house in the examples above, an operable single pane metal window is replaced with a 0.55 U-factor window. Does this alteration result in a compliance credit? How about the case where the existing window is replaced with a window that has a U-factor of 0.35?

Answer

As explained in Example 9-36, altered components that receive compliance credit must exceed the requirements of Table 150.2-B. Windows in the addition must have a U-factor of < 0.32 and SHGC < 0.25 to receive credit. Replacement windows in the existing house must have a U-factor of < 0.40 and SHGC < 0.35 to receive credit.

A window replacement with a 0.55 U-factor will receive a penalty as compared with a 0.40 U-factor standard design assumption for that window. Without third party verification of existing conditions, a 0.35 U-factor window replacement will receive a credit as compared with a 0.40 U-factor standard design assumption for that window. With third party verification of existing conditions, a 0.35 U-factor window replacement will receive a credit as compared with a 1.28 U-factor standard design assumption for an operable single pane metal existing window.

Although this example describes a window alteration, the same principles apply to other building systems, such as other building envelope components as well as HVAC and water heating equipment.

Example 9-38

Question

An addition of 590 ft² is being added to an existing 2,389 ft² single family house. How do you demonstrate compliance using the Existing + Addition + Alterations method?

Answer

The first step is to determine whether alterations to the existing building include at least two different types of energy components (e.g. upgrading attic insulation and replacing the water heater.) If so, use the E+A+A approach. If not, you're not allowed to use the performance approach.

Assuming the E+A+A calculation is permissible, the process requires the following next steps:

1. Collect accurate envelope and mechanical information about the existing building from scaled drawings (plans, sections and elevations); and what components, including HVAC, ducts and water heating, are being altered as part of the permitted scope of work.

2. Enter the information about the addition and the existing building into the compliance program, identifying each modeled feature as "Existing", "Altered" or "New" as summarized in Table 9-4. Proper tagging of each of these inputs is critical to correctly and accurately determining compliance.

3. Run the compliance software to determine if the proposed building TDV energy is equal or less than the standard design TDV energy.

4. If not, modify the energy features of the addition and/or the existing building until compliance is achieved; and print out the appropriate compliance report for permit submittal.

5. All projects that include energy measures requiring HERS field verification and diagnostic testing – which represent almost all buildings under the 2013 Standards – must be registered online with a HERS provider as explained in Section 2.3.

Example 9-39

Question

When using the existing-plus-addition performance approach, do the refrigerant charge, access holes (MAH and STMS) or CID, see §150.1(c)7, airflow, watt draw measurement, and static pressure probe (HSPP), or a permanently installed static pressure probe (PSPP) as specified in §150.0(m)13 and need to be met for central split system air conditioners serving an addition?

Answer

If existing equipment is extended to serve the addition, these space conditioning requirements do not need to be met as specified by Exception 4 to §150.2(a). However, Exception 5 to §150.2(a) indicates that the duct system that is going to be extended must be sealed tested and HERS verified according to §150.2(b)1D.

For performance compliance in climate zones that require a refrigerant charge and airflow measurement in Package A, a hypothetical standard design SEER split system with this credit would be modeled in both the standard and the proposed designs (for example, values from the vintage table, or minimally complying equipment), resulting in neither credit nor penalty related to this feature.

If a new central split system is installed to serve the addition, it must meet the requirements of §150.2(b)1C where installation of a new air conditioner to serve both the existing house and the addition is considered an alteration, and must meet the requirements for diagnostically tested refrigerant charge measurement fan airflow, watt draw and other requirements described. The duct sealing, testing and verification requirements of §150.2(b)1E must also be met.

Example 9-40 ..*HVAC STAFF this example still to be edited for the 2013 Standards]*

Question

When using the E+A+A performance method, can compliance credit be gained by sealing the existing ducts when it was not required for prescriptive compliance?

Answer

Yes. Credit can be obtained from sealing, testing and HERS verification of duct sealing. However as shown in Table 150.2-B "Standard Design for an Altered Component," the base case duct leakage will be the requirements in Section 150.2(b)1D (i.e. with 15% duct leakage or 10% leakage to the outside). Sealing below 15% can be difficult if the ducts are not readily accessible and large holes are present in the ducts. An alternative approach is to replace the ducted system with a ductless system such as a mini-split.

Example 9-41

Question

When using the existing plus addition performance compliance method, can credit be gained by installing a radiant barrier in the existing house attic? If so, where does the radiant barrier need to be installed?

Answer

Yes, installing a radiant barrier in the existing building will result in a credit relative to the standard design for existing buildings permitted (or constructed) prior to June 1, 2001. The radiant barrier must be installed over the entire attic/roof area including gable walls. If there are roof/ceiling assemblies where it is not possible to reach the underside of the roof, such as roof/ceiling assemblies using enclosed rafters which are not proposed to be exposed as part of the project, the radiant barrier cannot be properly installed and compliance credit is not possible.

Example 9-42

Question

I am adding a room to and altering an existing building in climate zone 12. I am upgrading a single-pane clear glass window with a U-factor of 1.2 and SHGC of 1.0 to a dual-pane window with a U-factor of 0.50 and SHGC of 0.45. Do I receive credit toward the addition compliance for installing this window?

Answer

No. There will be a penalty toward achieving compliance since the window is not as efficient as required by Table 150.2-B for climate zone 12 which requires a U-factor of 0.40 and an SHGC of 0.35. The penalty for the U-factor is based on the difference between 0.40 and 0.50 and for the SHGC is based on the difference between 0.35 and 0.45. If fenestration is installed which exceeds the performance of the values in Table 150.2-B, then credit is available.

Example 9-43

Question

I am planning on installing R-25 insulation in the attic of an existing house built in 1970. Can I use this added insulation as a credit for trading with the energy features of an addition?

Answer

No. When insulation is added to an attic, it must comply with §150.0(a) which sets a mandatory minimum for attic insulation of R-30. No credit is allowed until the mandatory minimum R-30 is reached. However, if you install R-30 or greater in the existing attic, you are allowed to take credit for the difference between the proposed attic insulation R-value and the standard design assumption:

1. Without third party verification of existing conditions, the energy credit is the difference between the default construction assembly U-factor for R-30 and the lower U-factor for attic insulation greater than R-30.

2. With third party verification of existing conditions, the energy credit is the difference between the default construction assembly U-factor for R-30 and U-factor of the site-verified existing attic conditions.

Example 9-44

Question

I am planning on installing R-25 insulation in an un-insulated vaulted ceiling without an attic space in an existing house built in 1970. Can I use this added insulation as a credit for trading with the energy features of an addition?

Answer

Yes. Since there is no attic space, the requirements of §150.0(a) require only R-19 or the equivalent between roof rafters. When you install R-25 you are allowed to take credit for the difference between R-25 and R-19 without third party verification of existing conditions. With third party site verification of the existing un-insulated vaulted ceiling prior to construction, you may take credit for the difference between the R-25 and R-0 (no insulation) in the vaulted ceiling.

Appendix B

APPLICABLE TABLES AND LANGUAGE FROM STANDARDS AND RACM

Appendix B is a collection of common used tables and language that are referenced in the *Residential Compliance Manual* which includes excerpts from the *2013 Building Energy Efficiency Standards for Residential and Nonresidential Buildings and the Appliance Efficiency Regulations.*

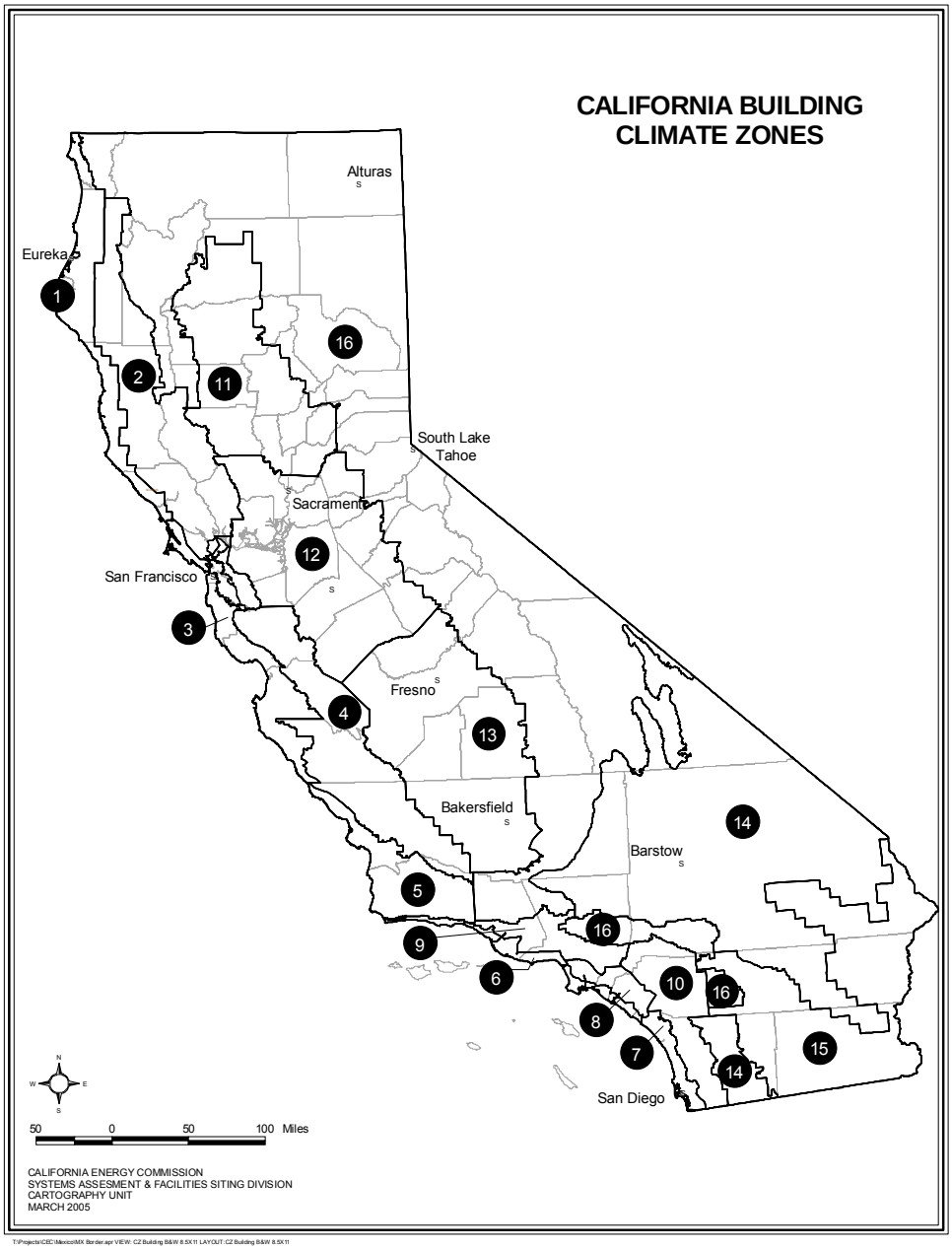

FIGURE 100.1-A—CALIFORNIA CLIMATE ZONES

TABLE 100.0-A APPLICATION OF STANDARDS

Occupancies	Application	Mandatory	Prescriptive	Performance	Additions/ Alterations
General Provisions		100.0, 100.1, 100.2, 110.0, 110.10			
Nonresidential, High-Rise Residential, And Hotels/Motels	General	140.0	140.2	140.1	141.0
	Envelope (conditioned)	110.6, 110.7, 110.8,120.7	140.3		
	Envelope (unconditioned process spaces)	N.A.	140.3(c)		
	HVAC (conditioned)	110.2, 110.5, 120.0-120.5, 120.8	140.4		
	Water Heating	110.3, 120.3, 120.8	140.5		
	Indoor Lighting (conditioned, process spaces)	110.9, 120.8, 130.0, 130.1, 130.4	140.3(c), 140.6		
	Indoor Lighting (unconditioned and parking garages)	110.9, 120.8, 130.0, 130.1, 130.4	140.3(c), 140.6	N.A.	
	Outdoor Lighting	110.9, 130.0, 130.2, 130.4	140.7		
	Building Electrical Power	130.5	N.A.		
	Pool and Spa Systems	110.4, 150.0(p)	N. A.		N. A.
	Solar Ready Buildings	110.10	N.A.		N.A.
Covered Processes[1]	Envelope, Ventilation, Process Loads	110.2, 120.6, 120.8	140.9	140.1	120.6, 140.9
Signs	Indoor and Outdoor	130.0, 130.3	140.8	N.A.	141.0
Low-Rise Residential	General	150.0	150.1(a, c)	150.1(a, b)	150.2
	Envelope (conditioned)	110.6, 110.7, 110.8, 150.0(a-e, g, l)			
	HVAC (conditioned)	110.2, 110.5, 150.0(h, i, m, o)			
	Water Heating	110.3, 150.0(j, n)			
	Indoor Lighting (conditioned, unconditioned and parking garages)	110.9, 130.0, 150.0(k)			
	Outdoor Lighting	110.9, 130.0,150.0(k)			
	Pool and Spa Systems	110.4, 150.0(p)	N. A.	N.A.	N.A.
	Solar Ready Buildings	110.10	N. A.	N.A.	N.A.

[1] Nonresidential, high-rise and hotel/motel buildings that contain covered processes may conform to the applicable requirements of both occupancy types listed in this table.

TABLE 110.2-A ELECTRICALLY OPERATED UNITARY AIR CONDITIONERS AND CONDENSING UNITS – MINIMUM EFFICIENCY REQUIREMENTS

Equipment Type	Size Category	Efficiency [a]		Test Procedure[c]
		Before 1/1/2015	After 1/1/2015	
Air conditioners, air cooled both split system and single package	≥ 65,000 Btu/h and < 135,000 Btu/h	11.2 EER[b] 11.4 IEER[b]	Applicable minimum efficiency values as determined by Title 20 California Code of Regulations Section 1605.1	ANSI/AHRI 340/360
	≥ 135,000 Btu/h and < 240,000 Btu/h	11.0 EER[b] 11.2 IEER[b]		ANSI/AHRI 340/360
	≥ 240,000 Btu/h and < 760,000 Btu/h	10.0 EER[b] 10.1 IEER[b]		
	≥ 760,000 Btu/h	9.7 EER[b] 9.8 IEER[b]		
Air conditioners, water cooled	≥ 65,000 Btu/h and < 135,000 Btu/h	12.1 EER[b] 12.3 IEER[b]		ANSI/AHRI 340/360
	≥135,000 Btu/h and < 240,000 Btu/h	12.5 EER[b] 12.5 IEER[b]		ANSI/AHRI 340/360
	≥240,000 Btu/h and < 760,000 Btu/h	12.4 EER[b] 12.6 IEER[b]		ANSI/AHRI 340/360
	≥ 760,000 Btu/h	12.2 EER[b] 12.4 IEER[b]		ANSI/AHRI 340/360
Air conditioners, evaporatively cooled	≥65,000 Btu/h and < 135,000 Btu/h	12.1 EER[b] 12.3 IEER[b]		ANSI/AHRI 340/360
	≥ 135,000 Btu/h and < 240,000 Btu/h	12.0 EER[b] 12.2 IEER[b]		ANSI/AHRI 340/360
	≥240,000 Btu/h and < 760,000 Btu/h	11.9 EER[b] 12.1 IEER[b]		ANSI/AHRI 340/360
	≥ 760,000 Btu/h	11.7 EER[b] 11.9 IEER[b]		ANSI/AHRI 340/360
Condensing units, air cooled	≥ 135,000 Btu/h	10.5 EER 11.8 IEER		ANSI/AHRI 365
Condensing units, water cooled	≥ 135,000 Btu/h	13.5 EER 14.0 IEER		
Condensing units, evaporatively cooled	≥ 135,000 Btu/h	13.5 EER 14.0 IEER		

a. IEERs are only applicable to equipment with capacity control as per ANSI/AHRI 340/360 test procedures

b. Deduct 0.2 from the required EERs and IEERs for units with a heating section other than electric resistance heat.

c. Applicable test procedure and reference year are provided under the definitions.

Standards Tables 110.2-B

TABLE 110.2-B UNITARY AND APPLIED HEAT PUMPS, MINIMUM EFFICIENCY REQUIREMENTS

Equipment Type	Size Category	Subcategory or Rating Condition	Efficiency [a]	Test Procedure[c]
Air Cooled (Cooling Mode)	≥ 65,000 Btu/h and < 135,000 Btu/h	Split system and single package	11.0 EER[b] 11.2 IEER[b]	ANSI/AHRI 340/360
	≥ 135,000 Btu/h and < 240,000 Btu/h		10.6 EER[b] 10.7 IEER[b]	
	≥ 240,000 Btu/h		9.5 EER[b] 9.6 IEER[b]	
Water source (cooling mode)	≥ 65,000 Btu/h and < 135,000 Btu/h	86ºF entering water	12.0 EER	ISO-13256-1
Groundwater source (cooling mode)	< 135,000 Btu/h	59ºF entering water	16.2 EER	ISO-13256-1
Ground source (cooling mode)	< 135,000 Btu/h	77ºF entering water	13.4 EER	ISO-13256-1
Water source water-to-water (cooling mode)	< 135,000 Btu/h	86ºF entering water	10.6 EER	ISO-13256-2
Groundwater source water-to-water (cooling mode)	< 135,000 Btu/h	59ºF entering water	16.3 EER	ISO-13256-1
Ground source brine-to-water (cooling mode)	< 135,000 Btu/h	77ºF entering water	12.1 EER	ISO-13256-2
Air Cooled (Heating Mode) Split system and single package	≥ 65,000 Btu/h and < 135,000 Btu/h (cooling capacity)	47° F db/43° F wb outdoor air	3.3 COP	ANSI/AHRI 340/360
		17° F db/15° F wb outdoor air	2.25 COP	
	≥ 135,000 Btu/h (cooling capacity)	47° F db/43° F wb outdoor air	3.2 COP	
		17° F db/15° F wb outdoor air	2.05 COP	
Water source (heating mode)	< 135,000 Btu/h (cooling capacity)	68ºF entering water	4.2 COP	ISO-13256-1
Groundwater source (heating mode)	< 135,000 Btu/h (cooling capacity)	50ºF entering water	3.6 COP	ISO-13256-1
Ground source (heating mode)	< 135,000 Btu/h (cooling capacity)	32ºF entering water	3.1 COP	ISO-13256-1
Water source water-to-water (heating mode)	< 135,000 Btu/h (cooling capacity)	68ºF entering water	3.7 COP	ISO-13256-2
Groundwater source water-to-water (heating mode)	< 135,000 Btu/h (cooling capacity)	50ºF entering water	3.1 COP	ISO-13256-2
Ground source brine-to-water (heating mode)	< 135,000 Btu/h (cooling capacity)	32ºF entering water	2.5 COP	ISO-13256-2

[a] IEERs are only applicable to equipment with capacity control as per ANSI/AHRI 340/360 test procedures.

[b] Deduct 0.2 from the required EERs and IEERs for units with a heating section other than electric resistance heat.

[c] Applicable test procedure and reference year are provided under the definitions.

Standards Tables 110.6-A and 110.6-B

TABLE 110.6-A DEFAULT FENESTRATION PRODUCT U-FACTORS

FRAME	PRODUCT TYPE	SINGLE PANE [3, 4] U-FACTOR	DOUBLE PANE [1, 3, 4] U-FACTOR	GLASS BLOCK [2,3] U-FACTOR
Metal	Operable	1.28	0.79	0.87
	Fixed	1.19	0.71	0.72
	Greenhouse/garden window	2.26	1.40	N.A.
	Doors	1.25	0.77	N.A.
	Skylight	1.98	1.30	N.A.
Metal, Thermal Break	Operable	N.A.	0.66	N.A.
	Fixed	N.A.	0.55	N.A.
	Greenhouse/garden window	N.A.	1.12	N.A.
	Doors	N.A.	0.59	N.A.
	Skylight	N.A.	1.11	N.A.
Nonmetal	Operable	0.99	0.58	0.60
	Fixed	1.04	0.55	0.57
	Doors	0.99	0.53	N.A.
	Greenhouse/garden windows	1.94	1.06	N.A.
	Skylight	1.47	0.84	N.A.

1. For all dual-glazed fenestration products, adjust the listed U-factors as follows:
   a. Add 0.05 for products with dividers between panes if spacer is less than 7/16 inch wide.
   b. Add 0.05 to any product with true divided lite (dividers through the panes).
2. Translucent or transparent panels shall use glass block values when not rated by NFRC 100.
3. Visible Transmittance (VT) shall be calculated by using Reference Nonresidential Appendix NA6.
4. Windows with window film applied that is not rated by NFRC 100 shall use the default values from this table.

TABLE 110.6-B DEFAULT SOLAR HEAT GAIN COEFFICIENT (SHGC)

FRAME TYPE	PRODUCT	GLAZING	FENESTRATION PRODUCT SHGC		
			Single Pane[2,3] SHGC	Double Pane[2,3] SHGC	Glass Block[1,2] SHGC
Metal	Operable	Clear	0.80	0.70	0.70
	Fixed	Clear	0.83	0.73	0.73
	Operable	Tinted	0.67	0.59	N.A.
	Fixed	Tinted	0.68	0.60	N.A.
Metal, Thermal Break	Operable	Clear	N.A.	0.63	N.A.
	Fixed	Clear	N.A.	0.69	N.A.
	Operable	Tinted	N.A.	0.53	N.A.
	Fixed	Tinted	N.A.	0.57	N.A.
Nonmetal	Operable	Clear	0.74	0.65	0.70
	Fixed	Clear	0.76	0.67	0.67
	Operable	Tinted	0.60	0.53	N.A.
	Fixed	Tinted	0.63	0.55	N.A.

1. Translucent or transparent panels shall use glass block values when not rated by NFRC 200.
2. Visible Transmittance (VT) shall be calculated by using Reference Nonresidential Appendix NA6.
3. Windows with window film applied that is not rated by NFRC 200 shall use the default values from this table.

Standards Tables 150.1-A

STANDARDS TABLE 150.1-A COMPONENT PACKAGE A

					Climate Zone															
					1	**2**	**3**	**4**	**5**	**6**	**7**	**8**	**9**	**10**	**11**	**12**	**13**	**14**	**15**	**16**
Building Envelope	**Insulation[1]**	**Roofs /Ceilings U / R-Value**			U 0.025 /R38	U 0.031/R 30									U 0.025 /R 38					
		Walls	Above Grade	2x4 Framed[2]	U 0.065 /R 15+4/ or R 13+5															
					1	**2**	**3**	**4**	**5**	**6**	**7**	**8**	**9**	**10**	**11**	**12**	**13**	**14**	**15**	**16**
				Mass Wall Interior[3]	U 0.070 /R 13															U 0.059 /R 17
				Mass Wall Exterior[3]	U 0.125 /R 8.0															U 0.070 /R 13
			Below Grade	Below Grade Interior[3]	U 0.070 /R 13															U 0.066 /R 15
					1	**2**	**3**	**4**	**5**	**6**	**7**	**8**	**9**	**10**	**11**	**12**	**13**	**14**	**15**	**16**
				Below Grade Exterior[3]	U 0.200 /R 5.0													U 0.100 /R 10		U 0.053 /R 19
		Floors	Slab Perimeter		NR															U 0.58 /R 7
			Raised		U 0.037 /R 19															
					1	**2**	**3**	**4**	**5**	**6**	**7**	**8**	**9**	**10**	**11**	**12**	**13**	**14**	**15**	**16**
			Concrete Raised		U 0.092 R 8.0		U 0.269 /R 0.0								U 0.092 /R 8.0	U 0.138 /R 4.0	U 0.092 /R 8.0	U 0.092 /R 8.0	U 0.138 /R 4.0	U 0.092 /R 8.0
		Radiant Barrier			NR	REQ														NR

				1	**2**	**3**	**4**	**5**	**6**	**7**	**8**	**9**	**10**	**11**	**12**	**13**	**14**	**15**	**16**
Building Envelope	**Roofing Products**	**Low-sloped**	Aged Solar Reflectance	NR												0.6	NR	0.6	NR
			Thermal Emittance	NR												0.75	NR	0.75	NR
		Steep Sloped	Aged Solar Reflec-tance	NR									0.20						NR
				1	**2**	**3**	**4**	**5**	**6**	**7**	**8**	**9**	**10**	**11**	**12**	**13**	**14**	**15**	**16**
			Thermal Emittance	NR									0. 75						NR
	Fenestration	Maximum U-factor[4]		0.32															
				1	**2**	**3**	**4**	**5**	**6**	**7**	**8**	**9**	**10**	**11**	**12**	**13**	**14**	**15**	**16**
		Maximum SHGC[5]		NR	0.25	NR	0.25	NR	0.25										
		Maximum Total Area		20%															
		Maximum West Facing Area		NR	5%	NR	5%	NR	5%										

TABLE 150.1-A COMPONENT PACKAGE A (continuation)

			1	2	3	4	5	6	7	8	9	10	11	12	13	14	15	16
HVAC SYSTEM	Space Heating	Electric Resistance Allowed	Not Allowed															
		If gas, AFUE	Minimum															
		If Heat Pump, HSPF[6]	Minimum															
	Space Cooling	SEER	Minimum															
			1	2	3	4	5	6	7	8	9	10	11	12	13	14	15	16
		Refrigerant Charge Verification or Charge Indicator Display	NR	REQ	NR					REQ								NR
		Whole House Fan[7]	NR							REQ							NR	NR
			1	2	3	4	5	6	7	8	9	10	11	12	13	14	15	16
	Central System Air Handler	Central Fan Integrated Ventilation Systems Fan Efficacy	REQ															
	Ducts	Duct Insulation	R-6													R-8	R-8	R-8
			1	2	3	4	5	6	7	8	9	10	11	12	13	14	15	16
Water Heating	All Buildings		System Shall meet Section 150.1(c)8															

Footnote requirements to TABLE 150.1-A*Error! Reference source not found.*

1. The U-factors/R-values shown for ceiling, wall and raised floor insulation are for wood-frame construction with insulation installed between the framing members. For alternative construction assemblies, see Section 150.1(c)1A, B and C.
2. U-factors can be met by cavity insulation alone or with continuous insulation alone, or with both cavity and continuous insulation that results in a U-factor equal to or less than the U-factor shown. "R-15+4" means R-15 cavity insulation plus R-4 continuous insulation. Any combination of cavity insulation and/or continuous insulation that results in a U-factor equal to or less than 0.065 is allowed, such as R-13+5.
3. Mass wall has a thermal heat capacity greater than or equal to 7.0 Btu/h-ft^2. Below grade "interior" denotes insulation installed on the inside surface of the wall. Below grade "exterior" denotes insulation installed on the outside surface of the wall.
4. The installed fenestration products shall meet the requirements of Section 150.1(c)3.
5. The installed fenestration products shall meet the requirements of Section 150.1(c)4.
6. HSPF means "heating seasonal performance factor."
7. When whole house fans are required (REQ), only those whole house fans that are listed in the Appliance Efficiency Directory may be installed. Compliance requires installation of one or more WHFs whose total airflow CFM is capable of meeting or exceeding a minimum 2 cfm/square foot of conditioned floor area per Section 150.1(c)12.

8. A supplemental heating unit may be installed in a space served directly or indirectly by a primary heating system, provided that the unit thermal capacity does not exceed 2 kilowatts or 7,000 Btu/hr and is controlled by a time-limiting device not exceeding 30 minutes.

Standards Tables 150.2-A AGED SOLAR REFLECTANCE INSULATION TRADE OFF TABLE

TABLE 150.2-A AGED SOLAR REFLECTANCE INSULATION TRADE OFF TABLE

Aged Solar Reflectance	Roof Deck Insulation R-value	Aged Solar Reflectance	Roof Deck Insulation R-value
0.62-0.60	2	0.44-0.40	12
0.59-0.55	4	0.39-0.35	16
0.54-0.50	6	0.34-0.30	20
0.49-0.45	8	0.29-0.25	24

Residential Table – Vintage Table Values

TABLE R3-50 – DEFAULT ASSUMPTIONS FOR EXISTING BUILDINGS – VINTAGE TABLE VALUES

Default Assumptions for Year Built (Vintage)

Conservation Measure	Before 1978	1978 to 1983	1984 to 1991	1992 to 1998	1999 - 2000	2001-2003	2004-2005	2006 and 2012	2013 and Later
INSULATION U-FACTOR									
Roof/Ceiling	0.079	0.049	0.049	0.049	0.049	0.049	0.049	0.049	
Wall	0.356	0.110	0.110	0.102	0.102	0.102	0.102	0.102	
Raised Floor –Crawl Space	0.099	0.099	0.099	0.046	0.046	0.046	0.046	0.046	
Cool Roof	0.10	0.10	0.10	0.10	0.10	0.10	0.10	Pres Pkg.	
Radiant Barrier	None	None	None	None	None	None	Pres Pkg.	Pres Pkg.	
Raised Floor-No Crawl Space	0.238	0.238	0.238	0.064	0.064	0.064	0.064	0.064	
Slab Edge F-factor	0.73	0.73	0.73	0.73	0.73	0.73	0.73	0.73	
Ducts	R-2.1	R-2.1	R-2.1	R-4.2	R-4.2	R-4.2	R-4.2	Pres Pkg.	
LEAKAGE									
Building (SLA)	4.9	4.9	4.9	4.9	4.9	4.9	4.9	4.9	
Duct Leakage Factor (See Table 4-13)	0.86	0.86	0.86	0.86	0.86	0.89	0.89	0.89	
FENESTRATION									
U-factor	Use Standards Table 110.6-A , §110.6 for all Vintages								
SHGC	Use Standards Table 110.6-B , §110.6 for all Vintages								
Shading Dev.	Use Table R3-27 and R3-28 for all Vintages in the Residential ACM Manual – Performance Approach								
SPACE HEATING EFFICIENCY									
Gas Furnace (Central) AFUE	0.75	0.78	0.78	0.78	0.78	0.78	0.78	0.78	
Gas Heater (Room) AFUE	0.65	0.65	0.65	0.65	0.65	0.65	0.65	0.65	
Hydronic/Comb Hydronic	0.78	0.78	0.78	0.78	0.78	0.78	0.78	0.78	
Heat Pump HSPF	5.6	5.6	6.6	6.6	6.8	6.8	6.8	7.4	
Electric Resistance HSPF	3.413	3.413	3.413	3.413	3.413	3.413	3.413	3.413	
Electric Resistance Radiant HSPF	3.55	3.55	3.55	3.55	3.55	3.55	3.55	3.55	
SPACE COOLING EFFICIENCY									
All Types, SEER	8.0	8.0	8.9	9.7	9.7	9.7	9.7	13.0	
WATER HEATING									
Energy Factor	0.525	0.525	0.525	0.525	0.575	0.575	0.575	0.575	

Appliance Efficiency Standards From Section 1605.1

Table B-2
Standards for Room Air Conditioners and Room Air-Conditioning Heat Pumps

Appliance	*Louvered Sides*	*Cooling Capacity (Btu/hr)*	*Minimum EER*
Room Air Conditioner	Yes	< 6,000	9.7
Room Air Conditioner	Yes	≥ 6,000 – 7,999	9.7
Room Air Conditioner	Yes	≥ 8,000 – 13,999	9.8
Room Air Conditioner	Yes	≥ 14,000 – 19,999	9.7
Room Air Conditioner	Yes	≥ 20,000	8.5
Room Air Conditioner	No	< 6,000	9.0
Room Air Conditioner	No	≥ 6,000 – 7,999	9.0
Room Air Conditioner	No	≥ 8,000 – 19,999	8.5
Room Air Conditioner	No	≥ 20,000	8.5
Room Air Conditioning Heat Pump	Yes	< 20,000	9.0
Room Air Conditioning Heat Pump	Yes	≥ 20,000	8.5
Room Air Conditioning Heat Pump	No	< 14,000	8.5
Room Air Conditioning Heat Pump	No	≥ 14,000	8.0
Casement-Only Room Air Conditioner	Either	Any	8.7
Casement-Slider Room Air Conditioner	Either	Any	9.5

Table B-3
Standards for Packaged Terminal Air Conditioners and Packaged Terminal Heat Pumps

Appliance	*Mode*	*Cooling Capacity (Btu/hr)*	*Minimum EER or COP*
Packaged terminal air conditioners and packaged terminal heat pumps	Cooling	≤ 7,000	8.88 EER
		> 7,000 and < 15,000	10.0 – (0.00016 x Cap.) EER
		≥ 15,000	7.6 EER
Packaged terminal heat pumps	Heating	Any	1.3 + [0.16 (10.0 – 0.00016 x Cap.)] COP
Cap. = cooling capacity (Btu/hr)			

TableC3
Standards for Air-Cooled Air Conditioners and Air-Source Heat Pumps Subject to EPAct
(Standards Effective January 1, 2010 do not apply To Single Package Vertical Air Conditioners)

Appliance	*Cooling Capacity (Btu/hr)*	*System Type*	*Minimum Efficiency*			
			Effective January 1, 1994[1] or January 1, 1995[2]	*Effective June 15, 2008*	*Effective January 1, 2010*	
					Air Conditioners	*Heat Pumps*
Air-cooled unitary air conditioners and heat pumps (cooling mode)	< 65,000 *	Split system	10.0 SEER[1]	13.0 SEER		
	< 65,000 *	Single package	9.7 SEER[1]	13.0 SEER		
	≥ 65,000 and < 135,000	All	8.9 EER[1]		11.2 EER[3] 11.0 EER[4]	11.0 EER[3] 10.8 EER[4]
	≥ 135,000 and < 240,000	All	8.5 EER[2]		11.0 EER[3] 10.8 EER[4]	10.6 EER[3] 10.4 EER[4]
	≥ 240,000 and < 760,000	All			10.0 EER[3] 9.8 EER[4]	9.5 EER[3] 9.3 EER[4]
Air-cooled unitary air-conditioning heat pumps (heating mode)	< 65,000 *	Split system	6.8 HSPF[1]	7.7 HSPF		
	< 65,000 *	Single package	6.6 HSPF[1]	7.7 HSPF		
	≥ 65,000 and < 135,000	All	3.0 COP[1]		3.3 COP	
	≥ 135,000 and < 240,000	All	2.9 COP[2]		3.2 COP	
	≥ 240,000 and < 760,000	All			3.2 COP	

* Three phase models only.

[3] Applies to equipment that has electric resistance heat or no heating.

[4] Applies to equipment with all other heating-system types that are integrated into the unitary equipment.

Table C-4
Standards for Evaporatively-Cooled Air Conditioners

Appliance	*Cooling Capacity (Btu per hour)*	*Minimum EER*	
		Effective October 29, 2003	*Effective October 29, 2004*
Evaporatively-cooled air conditioners	< 65,000	*12.1*	12.1
	≥ 65,000 and < 135,000	*11.5*[1]	*11.5*[1]
	≥ 135,000 < 240,000	*9.6*	11.0

[1] Deduct 0.2 from the required EER for units with heating sections other than electric resistance heat.

Table C-6
Standards for Single Package Vertical Air Conditioners and Single Package Vertical Heat Pumps Manufactured on or After January 1, 2010

Appliance	***Cooling Capacity (BTU/hr)***	***System Type***	***Minimum Efficiency***	
			Cooling Mode	***Heating Mode***
Single package vertical air conditioners	< 65,000	Single-phase	9.0 EER	N/A
	< 65,000	3-phase	9.0 EER	N/A
	≥ 65,000 and < 135,000	All	8.9 EER	N/A
	≥ 135,000 and < 240,000	All	8.6 EER	N/A
Single package vertical heat pumps	< 65,000	Single-phase	9.0 EER	3.0 COP
	< 65,000	3-phase	9.0 EER	3.0 COP
	≥ 65,000 and < 135,000	All	8.9 EER	3.0 COP
	≥ 135,000 and < 240,000	All	8.6 EER	2.9 COP

Table E-2
Standards for Gas Wall Furnaces, Floor Furnaces, and Room Heaters

Appliance	***Design Type***	***Capacity (Btu per hour)***	***Minimum AFUE (%)***
Wall furnace	Fan	≤ 42,000	73
Wall furnace	Fan	> 42,000	74
Wall furnace	Gravity	≤ 10,000	59
Wall furnace	Gravity	> 10,000 ≤ 12,000	60
Wall furnace	Gravity	> 12,000 ≤ 15,000	61

Wall furnace	Gravity	> 15,000 ≤ 19,000	62
Wall furnace	Gravity	> 19,000 ≤ 27,000	63
Wall furnace	Gravity	> 27,000 ≤ 46,000	64
Wall furnace	Gravity	> 46,000	65
Floor furnace	All	≤ 37,000	56
Floor furnace	All	> 37,000	57
Room heater	All	≤ 18,000	57
Room heater	All	> 18,000 and ≤ 20,000	58
Room heater	All	> 20,000 and ≤ 27,000	63
Room heater	All	> 27,000 and ≤ 46,000	64
Room heater	All	> 46,000	65

Table E-3
Standards for Gas- and Oil-Fired Central Boilers and Electric Residential Boilers

Appliance	***Rated Input (Btu/hr)***	***Minimum Efficiency (%)***		
		AFUE		***Combustion Efficiency at Maximum Rated Capacity Effective January 1, 1994***
		Effective January 1, 1992	***Effective September 1, 2012***	
Gas steam boilers with single phase electrical supply	< 300,000	75	80 [1]	—
Gas hot water boilers with single phase electrical supply	< 300,000	80	82 [1,2]	—
Oil steam boilers with single phase electrical supply	< 300,000	—	82	—
Oil hot water boilers with single phase electrical supply	< 300,000	—	84 [2]	—
Electric steam residential boilers		—	NONE	—
Electric hot water residential boilers		—	NONE [2]	—
All other boilers with single phase electrical supply	< 300,000	80	—	—
Gas packaged boilers	≥ 300,000	—	—	80
Oil packaged boilers	≥ 300,000	—	—	83

[1] No constant burning pilot light design standard effective September 1, 2012.
[2] Automatic means for adjusting temperature design standard effective September 1, 2012.

Table F-3
Standards for Large Water Heaters Effective October 29, 2003

Appliance	*Input to Volume Ratio*	*Size (Volume)*	*Minimum Thermal Efficiency (%)*	*Maximum Standby Loss*[1,2]
Gas storage water heaters	< 4,000 Btu/hr/gal	any	80	Q/800 + 110(V_r)1/2 Btu/hr
Gas instantaneous water heaters	≥ 4,000 Btu/hr/gal	< 10 gal	80	–
		≥ 10 gal	80	Q/800 + 110(V_r)1/2 Btu/hr
Gas hot water supply boilers	≥ 4,000 Btu/hr/gal	< 10 gal	80	–
		≥ 10 gal	80	Q/800 + 110(V_r)1/2 Btu/hr
Oil storage water heaters	< 4,000 Btu/hr/gal	any	78	Q/800 + 110(V_r)1/2 Btu/hr
Oil instantaneous water heaters	≥ 4,000 Btu/hr/gal	< 10 gal	80	–
		≥ 10 gal	78	Q/800 + 110(V_r)1/2 Btu/hr
Oil hot water supply boilers	≥ 4,000 Btu/hr/gal	< 10 gal	80	–
		≥ 10 gal	78	Q/800 + 110(V_r)1/2 Btu/hr
Electric storage water heaters	< 4,000 Btu/hr/gal	any	–	0.3 + 27/V_m %/hr

[1] *Standby loss is based on a 70° F temperature difference between stored water and ambient requirements. In the standby loss equations, V_r is the rated volume in gallons, V_m is the measured volume in gallons, and Q is the nameplate input rate in Btu/hr.*

[2] *Water heaters and hot water supply boilers having more than 140 gallons of storage capacity are not required to meet the standby loss requirement if the tank surface is thermally insulated to R-12.5, if a standing pilot light is not installed, and for gas- or oil-fired storage water heaters, there is a flue damper or fan-assisted combustion.*

Table F-4
Standards for Small Federally-Regulated Water Heaters

Appliance	*Minimum Energy Factor*	
	Effective April 15, 1991	*Effective January 20, 2004*
Gas-fired storage-type water heaters	0.62 – (.0019 x V)	0.67 – (.0019 x V)
Oil-fired water heaters (storage and instantaneous)	0.59 – (.0019 x V)	0.59 – (.0019 x V)
Electric storage water heaters (excluding tabletop water heaters)	0.93 – (.00132 x V)	0.97 – (.00132 x V)
Electric tabletop water heaters	0.93 – (.00132 x V)	0.93 – (.00132 x V)
Gas-fired instantaneous water heaters	0.62 – (.0019 x V)	0.62 – (.0019 x V)
Electric instantaneous water heaters (excluding tabletop water heaters)	0.93 – (.00132 x V)	0.93 – (.00132 x V)
Heat pump water heaters	0.93 – (.00132 x V)	0.97 – (.00132 x V)

V = rated volume in gallons.

Appendix C

NATURAL GAS APPLIANCE TESTING (NGAT) STANDARDS

The NGAT standards, "Natural Gas Appliance Testing (NGAT) Standards", are found in Section 24 of the "California Installation Standards" manual; edition dated July 1, 2012. A copy may be obtained from contacting:

James E. O'Bannon

Richard Heath and Associates

1390 Ridgewood Drive, Suite 10

Chico, CA 95973

Phone: (530) 892-2460

Fax: (530) 892-2825

email: jim@rhainc.com

Appendix D – *Eligibility Criteria for Radiant Barriers, Section RA4.2.2*

Radiant barriers shall meet specific eligibility and installation criteria to be modeled by any ACM and receive energy credit for compliance with the energy efficiency standards for low-rise residential buildings.

The emittance of the radiant barrier shall be less than or equal to 0.05 as tested in accordance with ASTM C-1371 or ASTM E-408.

Installation shall conform to ASTM C-1158 [Standard Practice For Use and Installation Of Radiant Barrier Systems (RBS) In Building Construction.], ASTM C-727 (Standard Practice For Installation and Use Of Reflective Insulation In Building Constructions.), ASTM C-1313 (Standard Specification for Sheet Radiant Barriers for Building Construction Applications), and ASTM C-1224 (Standard Specification for Reflective Insulation for Building Applications). The radiant barrier shall be securely installed in a permanent manner with the shiny side facing down toward the interior of the building (ceiling or attic floor). Moreover, radiant barriers shall be installed at the top chords of the roof truss/rafters in ***any*** of the following methods:

1. Draped over the truss/rafter (the top chords) before the upper roof decking is installed.

2. Spanning between the truss/rafters (top chords) and secured (stapled) to each side.

3. Secured (stapled) to the bottom surface of the truss/rafter (top chord). A minimum air space shall be maintained between the top surface of the radiant barrier and roof decking of not less than 1.5 inches at the center of the truss/rafter span.

4. Attached [laminated] directly to the underside of the roof decking. The radiant barrier shall be laminated and perforated by the manufacturer to allow moisture/vapor transfer through the roof deck.

In addition, the radiant barrier shall be installed to cover all gable end walls and other vertical surfaces in the attic.

The attic shall be ventilated to:

1. Conform to the radiant barrier manufacturer's instructions.

2. Provide a minimum free ventilation area of not less than one square foot of vent area for each 150 ft2 of attic floor area.

3. Provide no less than 30 percent upper vents.

Ridge vents or gable end vents are recommended to achieve the best performance. The material should be cut to allow for full airflow to the venting.

1. The radiant barrier (except for radiant barriers laminated directly to the roof deck) shall be

installed to have a minimum gap of 3.5 inches between the bottom of the radiant barrier and the top of the ceiling insulation to allow ventilation air to flow between the roof decking and the top surface of the radiant barrier, and have a minimum of six (6) inches (measured horizontally) left at the roof peak to allow hot air to escape from the air space between the roof decking and the top surface of the radiant barrier.

2. When installed in enclosed rafter spaces where ceilings are applied directly to the underside of roof rafters, a minimum air space of 1 inch shall be provided between the radiant barrier and the top of the ceiling insulation, and ventilation shall be provided for every rafter space. Vents shall be provided at both the upper and lower ends of the enclosed rafter space.

3. The product shall meet all requirements for California certified insulation materials (radiant barriers) of the Department of Consumer Affairs, Bureau of Home Furnishings and Thermal Insulation, as specified by CCR, Title 24, Part 12, Chapter 12-13, Standards for Insulating Material.

4. The use of a radiant barrier shall be listed in the *Special Features and Modeling Assumptions* listings of the CF-1R and described in detail in the ACM Compliance Supplement.

Appendix E

Requirement Diagrams for Selected Residential HVAC HERS Measures

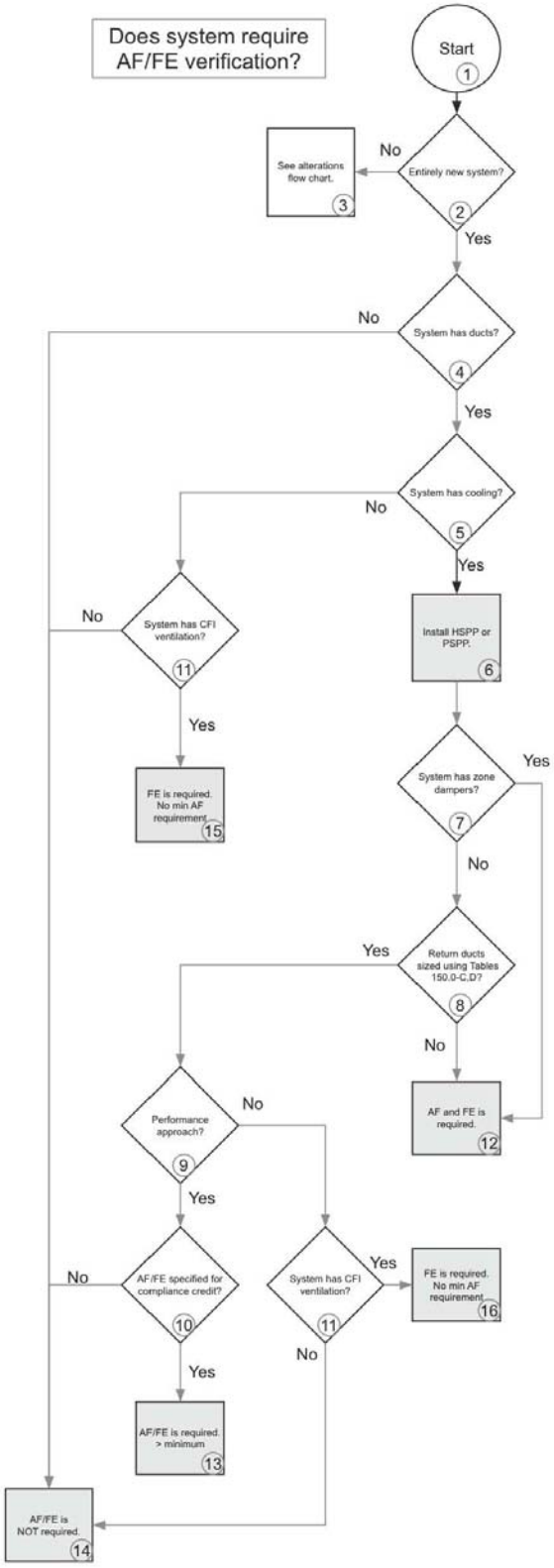

Flowchart G-1 - Determining if a System Requires Airflow and Fan Efficacy Verification

Instructions for Flowchart G-1 - Determining if a System Requires Airflow and Fan Efficacy Verification

1. Start here to determine if a new or altered system is required to have the airflow and fan efficacy field verified (350 cfm/ton and 0.58 watts/cfm).
2. If the system meets the definition of an Entirely New or Completely Replaced System (refer to Section 9.X in the Residential Compliance Manual), either being installed in a newly constructed home or in an existing home, choose “Yes,” otherwise choose “No.”
3. If the system is being installed in an existing home and it is an altered system, refer to Flow Chart 9.1.
4. If the system has a central air handler (package or split) connected to supply outlets via ducting of any shape or material, then choose “Yes.” Otherwise, choose “No.”
5. If they system includes mechanical DX air conditioning (this does not include whole house fans or swamp coolers), choose “Yes.” Otherwise, choose “No.”
6. Reaching this box means that the system is subject to the requirements of section 150.0(m)13. An HSPP or PSPP must be installed, as required. Refer to section 9.X in the Residential Compliance Manual. Continue to next box.
7. If the system has motorized zone dampers that open and close to send supply air to different parts of the home, then choose “Yes.” Otherwise, choose “No.”
8. Section 150.0(m)13 requires that the system either meet the airflow and fan efficacy requirements OR have the return ducts sized according to Table 150.0-C or 150.0-D. If the return ducts are sized and installed according to these tables, then choose “Yes.” Otherwise choose “No.”
9. If the performance compliance approach is used to demonstrate compliance to the energy requirements, then choose “Yes.” Otherwise, choose “No.”
10. If the performance compliance approach is used to demonstrate compliance to the energy requirements and an airflow greater than 350 cfm/ton is specified for compliance credit or a fan efficacy less than 0.58 watts/cfm is specified for compliance credit, then choose “Yes.” Otherwise, choose “No.”
11. If the system has a central fan integrated ventilation system (refer to section 9.6 of the Residential Compliance Manual), then choose “Yes.” Otherwise, choose “No.”
12. Reaching this box means that the system is required to demonstrate compliance to the minimum requirements of 350 cfm/ton and 0.58 watts/cfm. Refer to section 9.X of the Residential Compliance Manual. HERS Rater verification is required for these features as well as proper installation of the HSPP/PSPP.
13. Reaching this box means that the system is required to demonstrate compliance to the requirements of 350 cfm/ton or better and 0.58 watts/cfm or better. Refer to section 9.X of the Residential Compliance Manual. HERS Rater verification is required for these features as well as proper installation of the HSPP/PSPP and proper sizing of the return ducts according to Tables 150.0-C or Table 150.0-D.

14. Reaching this box means that the system is not subject to either the airflow or fan efficacy requirements, but if the system is ducted and has cooling, it will be subject to the requirements of having an HSPP/PSPP and return ducts sized according to Tables 150.0-C or 150.0-D.
15. Reaching this box means that the system is required to meet the 0.58 watts/cfm requirement, but not the 350 cfm/ton requirement.
16. Reaching this box means that the system is required to meet the 0.58 watts/cfm requirement, the HSPP/PSPP requirement and proper return duct sizing according to Tables 150.0-C or 150.0-D, but not the 350 cfm/ton requirement. HERS verification is required for all these required features.

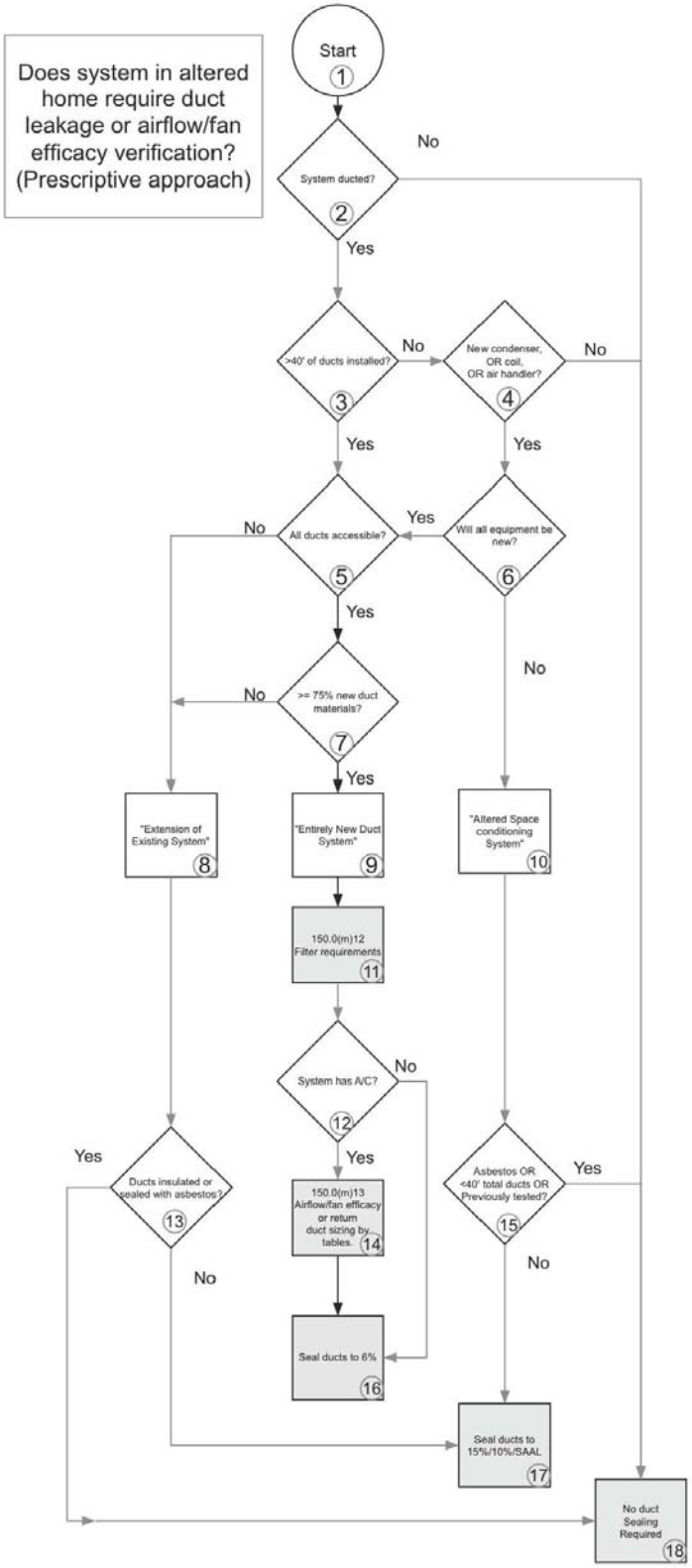

Flowchart G-2 - Duct Requirements for Altered Systems

Instructions for Flowchart G-2 – Duct Requirements for Altered Systems

1. Start here to determine if a system being added to or altered in an existing home needs to comply with the requirements for duct sealing and verification of sections 150.2(b)1D or 150.2(b)1E; or with the requirements for filtration, airflow and fan efficacy of sections 150.0(m)12 and 150.0(m)13 via section 150.2(b)Diia.
2. If the system has a central air handler (package or split) connected to supply outlets via ducting of any shape or material, then choose "Yes." Otherwise, choose "No."
3. If more than 40 feet of ducting is to be added to the existing system, replaced in the existing system or any combination of these two, then choose "Yes." Otherwise, choose "No."
4. If a new condenser, air handler, or evaporator coil is to be installed or replaced in this system, choose "Yes." Otherwise, choose "No."
5. If all of the ducts are accessible at some point before, after, or during the alterations to the system, choose "Yes." (This includes ducts in accessible attics, garages or crawl spaces. Ducts concealed behind sheetrock or other permanent obstructions are not considered accessible. See definition in Chapter 4.X of the Residential Compliance Manual.) Otherwise, choose "No."
6. If all of the heating and cooling equipment are newly installed or replaced, choose "Yes." If any heating or cooling equipment component (including air handlers, condensers, and coils, but not including ducts or plenums) will remain from prior to the alteration, choose "No."
7. Take the estimated length of the ducts to be added or replaced and divide it by the estimated total length of ducts in the system after the alteration work is completed. Include accessible and inaccessible ducts. If the result is 0.75 or greater, choose "Yes." Otherwise, choose "No."
8. Reaching this box means that the system meets the definition of an "Extension of Existing System" and is subject to the requirements of section 150.2(b)1Diib. Continue to next box.
9. Reaching this box means that the system meets the definition of an "Entirely New or Replacement Duct System" and is subject to the requirements of section 150.2(b)1Diia. Continue to next box.
10. Reaching this box means that the system meets the definition of an "Altered Space-Conditioning System" and is subject to the requirements of section 150.2(b)1E. Continue to next box.
11. Reaching this box means that the system is subject to the requirements of section 150.0(m)12 – Air Filtration. Refer to Chapter 9.X of the Residential Compliance Manual. Continue to next box.
12. If the system includes mechanical DX air conditioning (this does not include whole house fans or swamp coolers), choose "Yes." Otherwise, choose "No."
13. If any of the existing ducts or plenums are insulated or sealed with an asbestos containing material (this includes tapes, insulation wrap, or the duct material itself), choose "Yes." Otherwise, choose "No."
14. Reaching this box means that the system is subject to the requirements of section 150.0(m)13 – Duct System Sizing and Air Filter Grille Sizing. Refer to Chapter 9.X of the Residential Compliance Manual. Continue to next box.
15. If any of the existing ducts or plenums are insulated or sealed with an asbestos containing material (this includes tapes, insulation wrap, or the duct material itself); OR if the finished

system will have less than 40 feet of ducts; OR if the system was previously tested for duct leakage and a certificate of verification can be provided from an earlier permit showing that the system passed, choose “yes.” Otherwise, choose “No.”

16. Reaching this box means that the system requires duct sealing similar to a new system: 6% or one of the appropriate targets for “new duct systems” from Table RA3.1-2. If the air handler is not new (left from the original system that was altered), an attempt must be made to seal it to 6% leakage. If it cannot obtain this target, smoke may be used to show that excessive leakage is coming from the old air handler. Refer to sections RA3.1. Note: if the answer to box #6 is “Yes,” then the system meets the definition of an “Entirely New or Complete Replacement Space Conditioning System” and is subject to the requirements of section 150.2(b)1C.
17. Reaching this box means that the system requires duct sealing using one of the appropriate targets for “altered existing duct systems” from Table RA3.1-2. Refer to sections RA3.1.
18. Reaching this box means that the system is not subject to any duct sealing requirements.

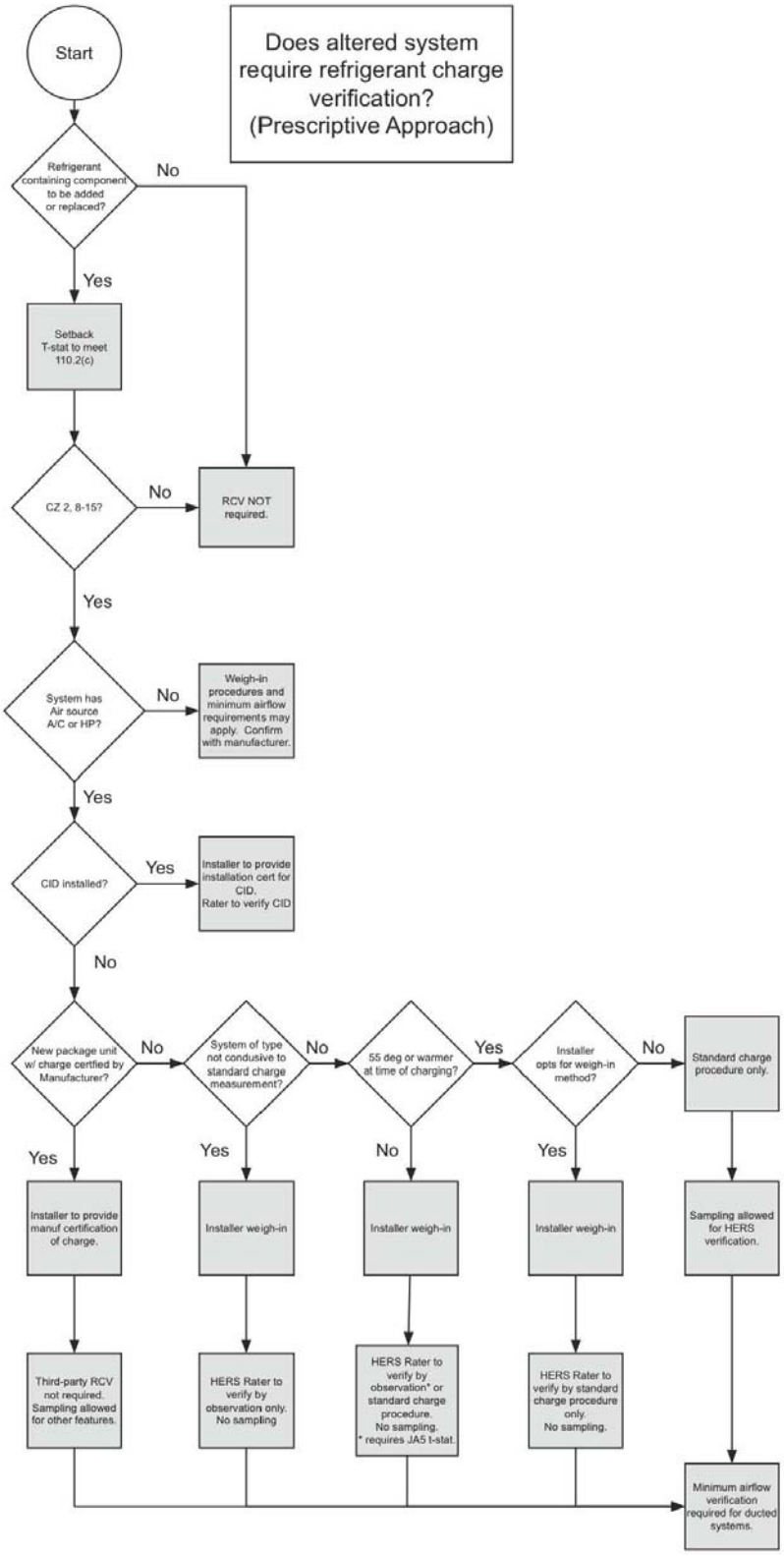

Flowchart G-3 – Refrigerant Charge Prescriptive approach

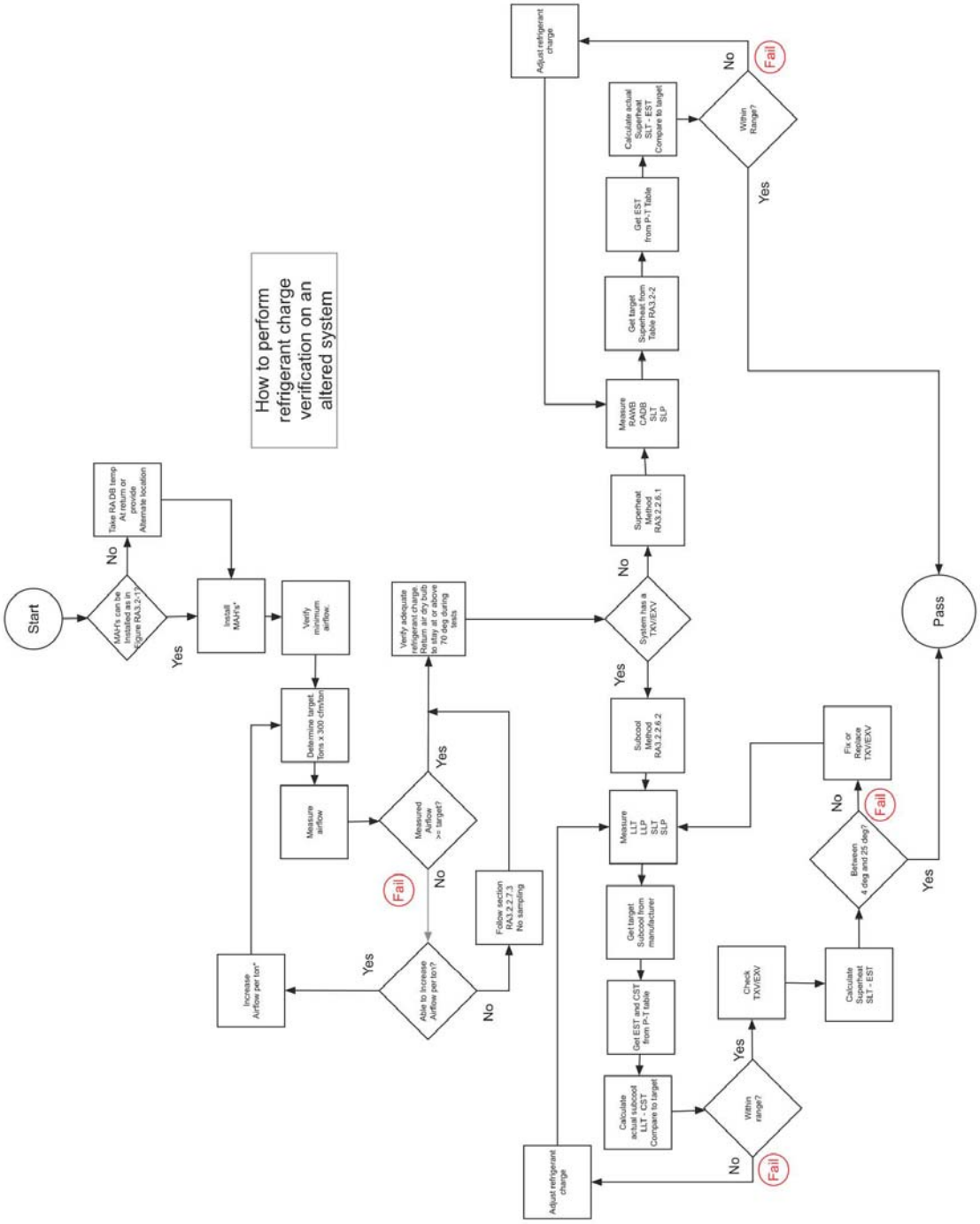

Flowchart G-4 – Refrigerant Charge on Altered Systems

Appendix F

Field Verification of Zonally Controlled Systems

Field Verification of Zonally Controlled Systems

References: 150.0(m)15, 150.1(c)13, JA1:Glossary: **ZONAL CONTROL,** RA 3.1.4.6

Introduction/Scope

Zonally controlled systems are usually installed primarily for improved comfort, not improved energy consumption. Recent studies have shown that zonally controlled cooling systems that utilize bypass ducts or that substantially reduce the airflow across the coil when zone dampers close can actually use more energy. Because of this, HERS raters are required to evaluate these systems to ensure that it is consistent with what was modeled and what appears on the CF1R form.

One type of zonally controlled forced air system utilizes motorized zone dampers in the supply ducts to send supply air from a single air handler to different zones, as needed, rather than sending air to the entire are served by that system. These require multiple thermostats or temperature sensors in each of the zones. The number of zones can be two or more. Two-zone systems are by far the most common. The most common application of this type of system is in two story homes served by a single forced air system. The tendency for air to stratify, along with substandard duct design, causes comfort issues that can often be overcome by zonal control.

Note that dampers may also be installed on the return ducts, but are not required for the system to be considered a zonally controlled system.

Problems with this type of zonally controlled systems arise from the excess air pressure that occurs at the air handler fan when one or more of the zone dampers close and restrict airflow to just a portion of the supply duct system. One strategy is to simply let the pressure increase, which substantially reduces airflow across the cooling coil or heat exchanger. Another is to install a bypass duct that allows the excess air to “short circuit” from the supply side back to the return side. This causes problems by sending excessively hot air (heating mode) or excessively cold air (cooling mode) back into the system.

An alternative approach is to send the “excess air” back into conditioned space rather than directly back into the return air. These are not considered bypass ducts if the air has a chance to mix with house air in a way that does not substantially change the return air temperatures. The area in the home where the excess air is sent to is referred to as a “dump zone”. These dump zones will generally be over conditioned by this excess air and are usually unoccupied portions of the home, such as hallways or vaulted ceiling areas above the occupied zones. This design may lose some of the comfort benefits of a zonally controlled system.

Note that zonal control can be also achieved by using two separate systems, sized appropriately for each zone. These act independently and do not need zone dampers. These also do not require bypass dampers or other strategies to handle the excess air. For example, zonal control can be achieved in a two story home by installing a single system with zone dampers that separately control air to the upstairs and downstairs; or it can be achieved by installing two small systems, one dedicated to the first floor and one to the second floor. Assuming that the house can be adequately served by a single large system, the first approach generally costs less.

If it is discovered that a zonally controlled forced air system is installed but not claimed for credit, it needs to be reported to the HERS provider (registry). Because zonally controlled systems can be an energy penalty, they need to be correctly modeled when installed.

Summary of requirements:

Prescriptive compliance approach –

1. Zonally controlled systems are not required, but if installed must meet mandatory AF/FE requirements (slightly different test methods for single speed and variable speed compressors)
2. Bypass ducts/dampers are NOT allowed.

Performance compliance approach –

1. Zonally controlled systems must be modeled if installed.
2. Bypass dampers allowed only if modeled.
3. Dual speed/multi speed condensers may also qualify for a credit (reduced penalty) and if modeled, must be installed.

Note: when a feature is "modeled" using the performance compliance approach it will appear on the certificate of compliance.

Identifying Zonally Controlled Systems In the Field

The following are characteristics of most zonally controlled systems that utilize dampers. Not all of these items need to be apparent for the system to be considered zonally controlled. Final determination may require consulting with the installer, designer and system manufacturer.

1. Motorized or actuated zone dampers on the supply ducts. These can be one or more large dampers in or near the supply plenum or they can be one damper for each supply outlet (register). See diagrams below.
2. Multiple thermostats or temperature sensors in area served by a single system. The most common two zone systems utilize ordinary thermostats for each zone. Some systems have a single master thermostat with small temperature sensors in each zone.
3. A control board on or near the air handler with low voltage wires going to the thermostats/temperature sensors and to each damper. Low voltage wires will also connect the control board and the main air handler control board. See photos below.
4. Bypass duct and damper. This will be a duct connecting the supply end directly to the return end. On the supply side it will connect after the coil and before the zone damper(s), usually off of the supply plenum. On the return side, it can either connect directly to the side of the return end of the furnace, near the return end of the furnace in a return plenum, or as far away as a return grill boot. Some sort of automatic damper will control airflow through this duct. When all zones are calling for cooling (all zone dampers open), the bypass damper should be fully closed. When one or more zone dampers close, the damper should open partially or fully as needed to reduce the supply plenum pressure. This is commonly achieved by a barometric bypass damper. Barometric dampers are held closed by an adjustable weight. When enough pressure builds up on one side of the damper, it overpowers the weight and opens the damper. See diagram below. Another strategy is to use a motorized damper.

Identifying Multi-Speed/Variable-Speed Condensers

Most condensers operate at a single speed and capacity and either run for longer or shorter periods of time during hotter or cooler weather, respectively. Short run times (aka, short cycling) reduce efficiency. Multi-speed condensers typically have a high and low speed. This can be accomplished by two separate compressors inside a single condenser, or by a single dual-stage compressor. During cooler weather (aka, part load times) the condenser will run in low speed for longer run periods. When needed, the condenser can run in high speed.

Variable-speed condensers are not limited to just high and low speeds. They can gradually ramp from lowest to highest speeds as needed.

There are several features that can indicate that a condenser is multi-speed. These include:

1. Product tags, labels and marketing names that indicate two-stage, dual-stage, multi-stage, etc.

2. Two compressors observed by looking down through the condenser fan.
3. High and low capacities or nominal tonnages indicated on nameplate.

The only definitive way to determine if the condenser is multi-speed or variable speed is to record the make and model number and find the manufacturer's specifications.

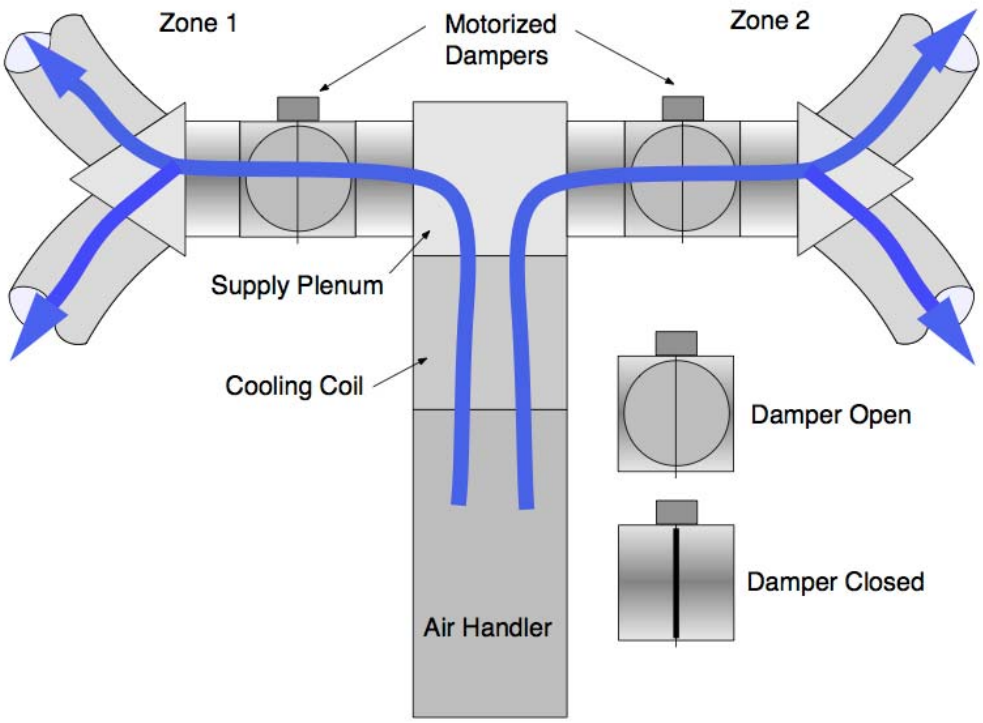

This diagram shows a common two-zone, two-damper system with both zones open (i.e., both zones are calling for cooling).

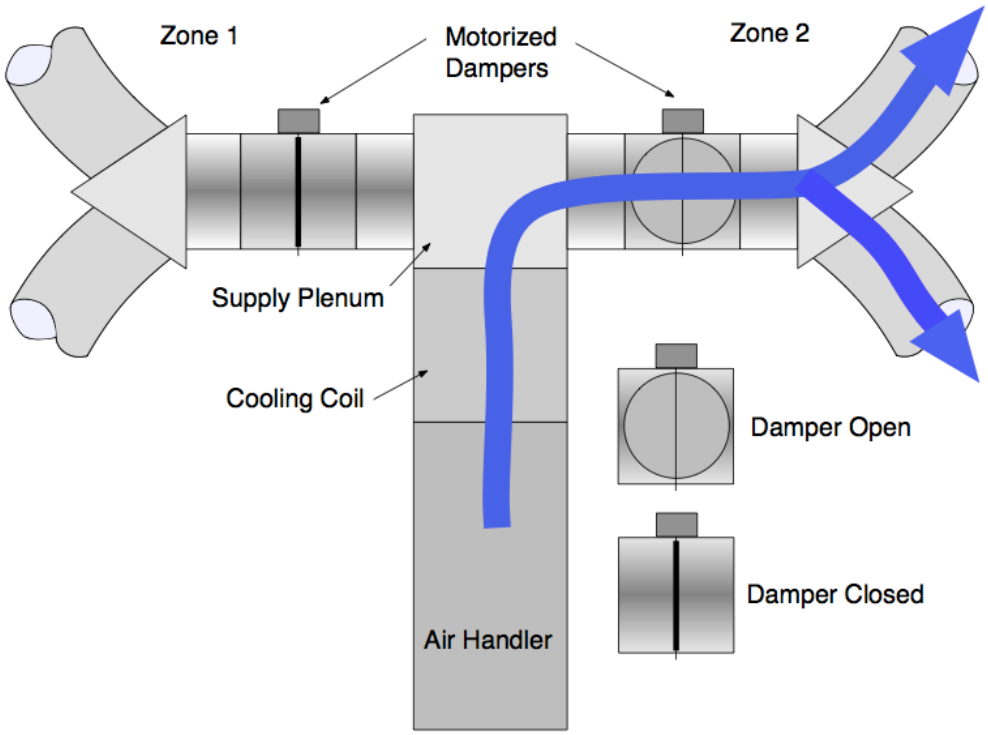

This diagram shows a common two-zone, two-damper system with zone 2 open (i.e., only zone 2 is calling for cooling).

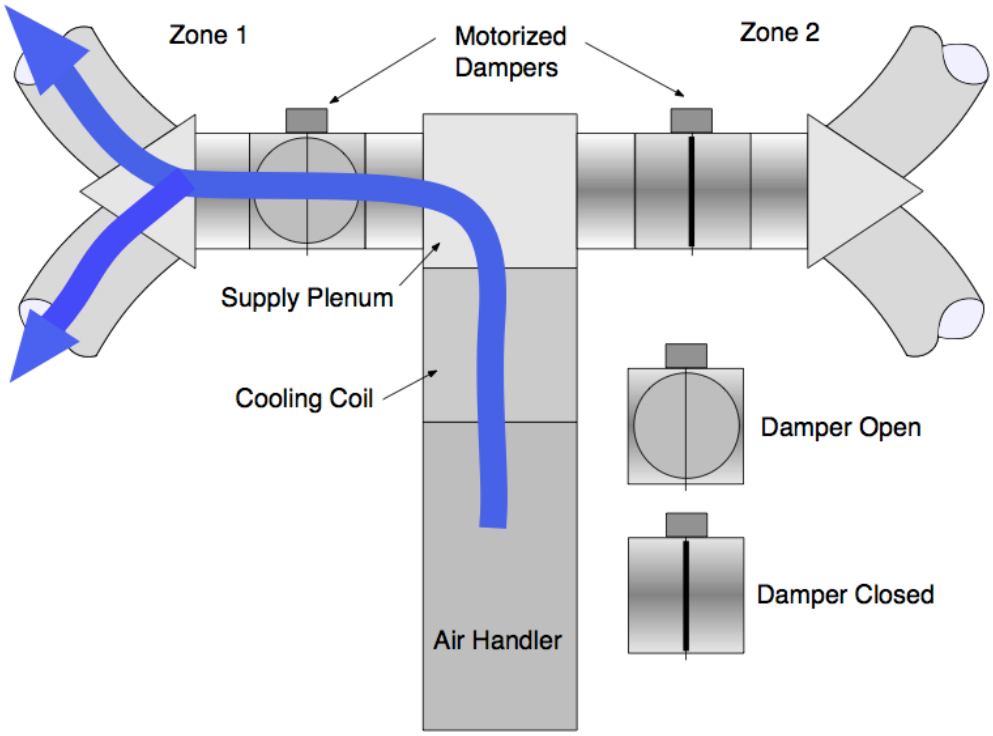

This diagram shows a common two-zone, two-damper system with zone 1 open (i.e., only zone 1 is calling for cooling).

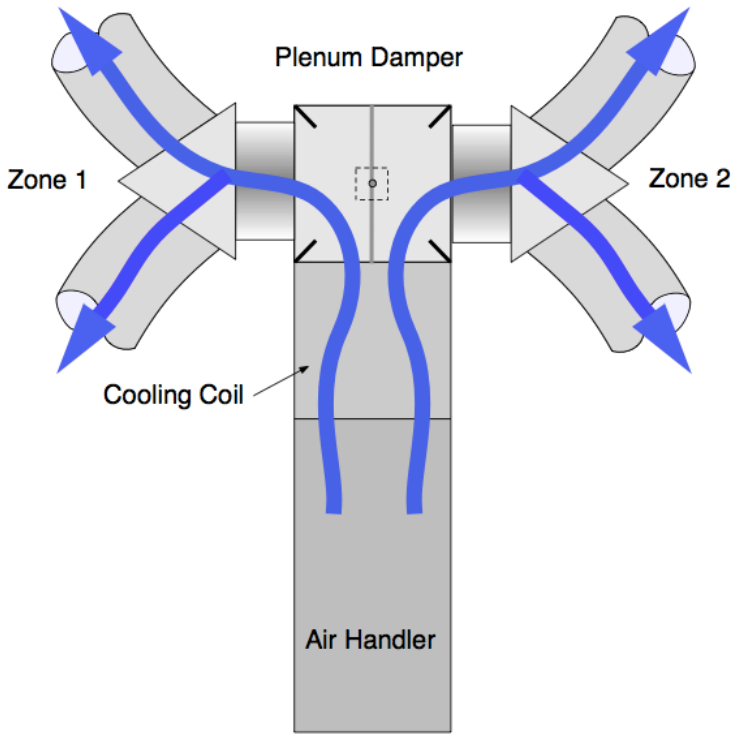

This diagram shows a common two-zone, single-damper system with both zones open (i.e., both zones are calling for cooling).

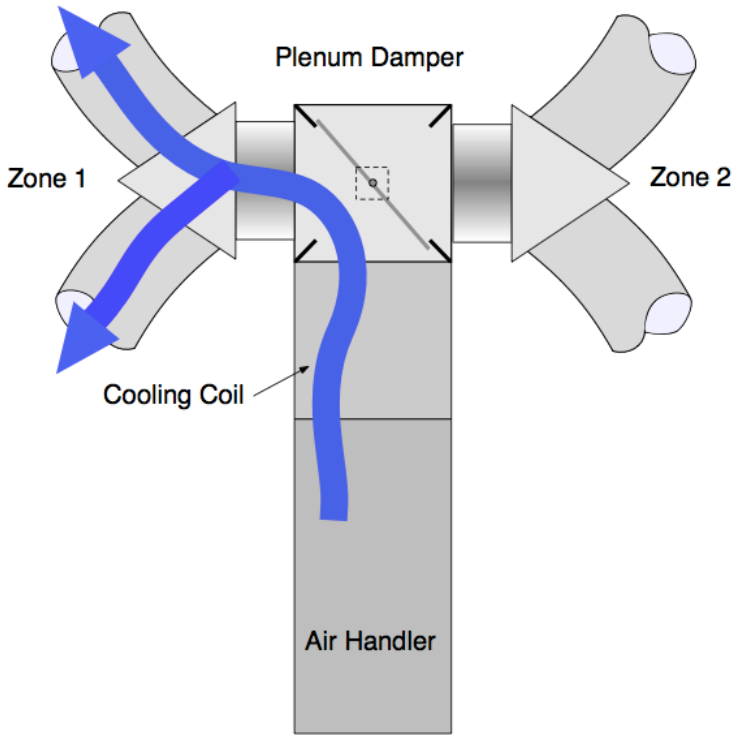

This diagram shows a common two-zone, single-damper system with zone 1 open (i.e., only zone 1 is calling for cooling).

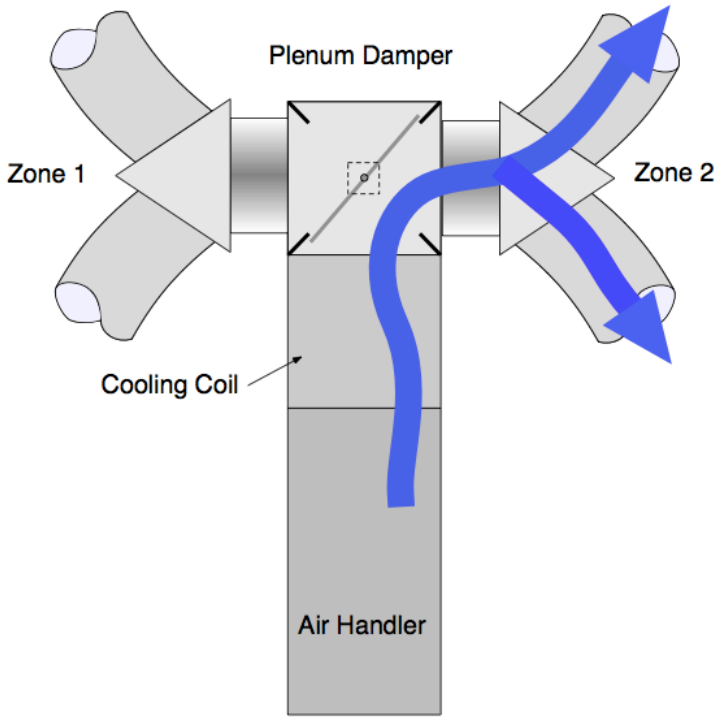

This diagram shows a common two-zone, single-damper system with zone 2 open (i.e., only zone 2 is calling for cooling).

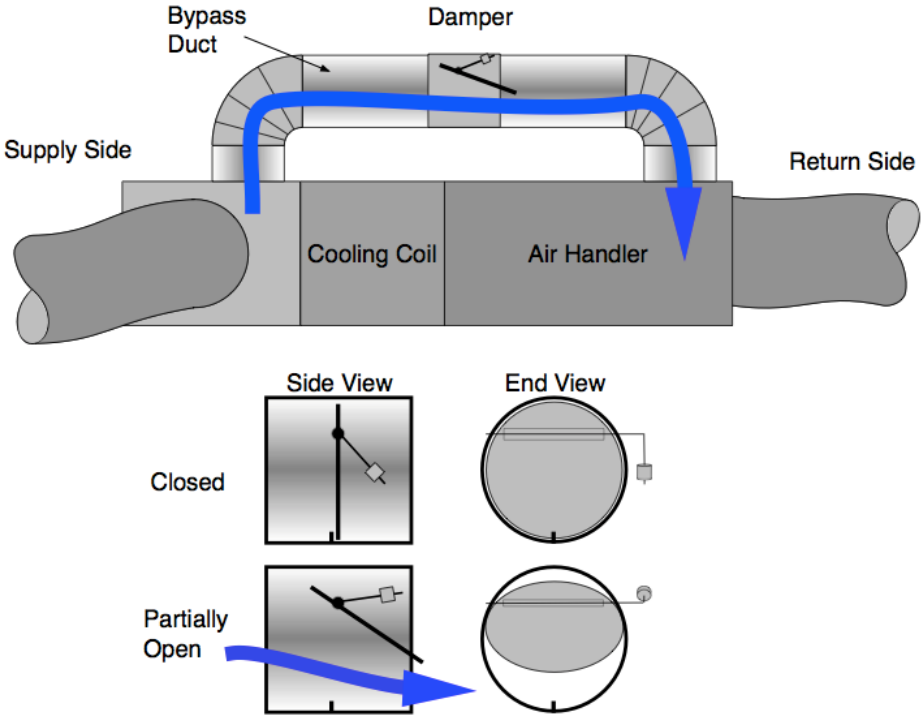

This diagram shows a common bypass duct/damper strategy. The bypass duct is sheet metal (which should always be insulated) and the damper is a barometric type. The details show how the damper opens when air pressure builds up against the adjustable weight. Sending heated or cooled air back into the space conditioning equipment can cause problems and reduce efficiency.

These photos show two examples of zonal control control-boards.

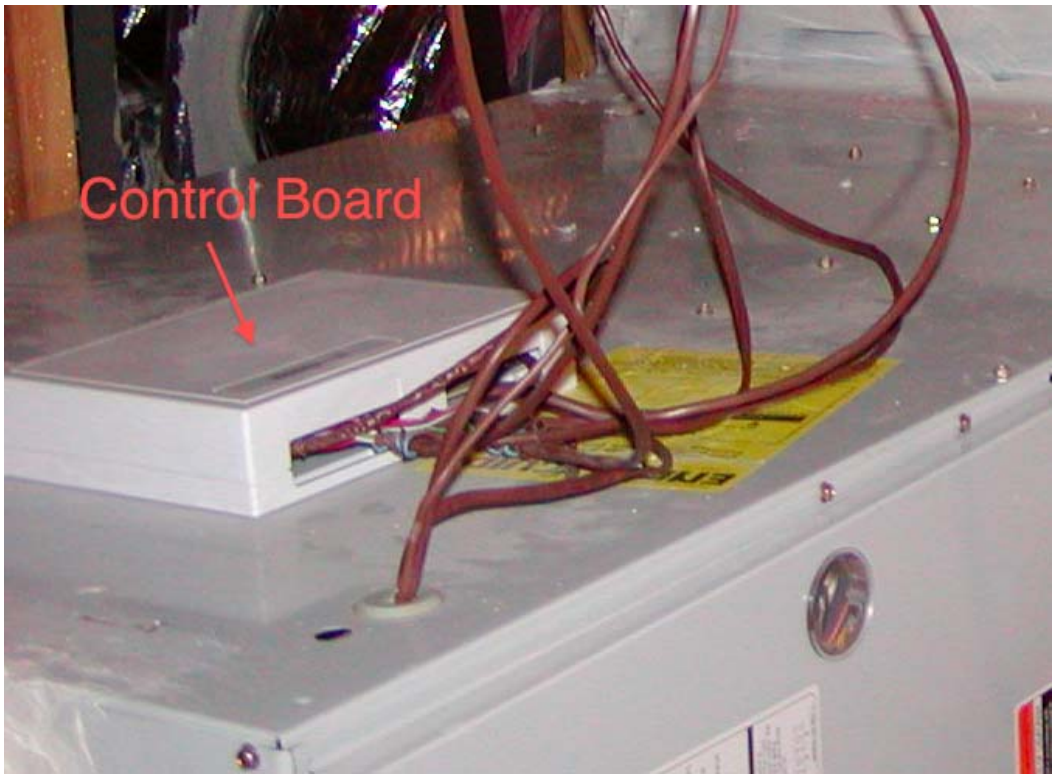

References:

JA1:Glossary
ZONAL CONTROL is the practice of dividing a residence into separately controlled HVAC zones. This may be done by installing multiple HVAC systems that condition a specific part of the building, or by installing one HVAC system with a specially designed distribution system that permits zonal control. The Energy Commission has approved an alternative calculation method for analyzing the energy impact of zonally controlled space heating and cooling systems. To qualify for compliance credit for zonal control, specific eligibility criteria specified in the Residential ACM Manual must be met.

150.0(m)15. **Zonally Controlled Central Forced Air Systems.** Zonally controlled central forced air cooling systems shall be capable of simultaneously delivering, in every zonal control mode, an airflow from the dwelling, through the air handler fan and delivered to the dwelling, of greater than 350 CFM per ton of nominal cooling capacity, and operating at an air-handling unit fan efficacy of less than 0.58 W/CFM as confirmed by field verification and diagnostic testing in accordance with the procedures specified in Reference Residential Appendix RA3.3.

EXCEPTION to 150.0(m)15: Multi-speed compressor systems or variable speed compressor systems shall demonstrate compliance for airflow (cfm/ton) and fan efficacy (Watt/cfm) by operating the system at maximum compressor capacity and maximum system fan speed and with all zones calling for conditioning.

150.1(c)13. **HVAC System Bypass Ducts.** Unless otherwise specified on the Certificate of Compliance, bypass ducts that deliver conditioned supply air directly to the space conditioning system return duct airflow shall not be used. All zonally controlled forced air systems shall be verified by a HERS Rater utilizing the procedure in Reference Residential Appendix Section RA3.1.4.6 to confirm compliance with 150.1(c)13.

RA 3.1.4.6 Verification of Prescriptive Bypass Duct Requirements for Zonnally Controlled Forced Air Systems

When a zonally controlled forced air system is installed, the following shall be verified to determine compliance as required by Standards Section 150.1(c)13:

1. A visual inspection shall confirm that bypass ducts that deliver conditioned supply air directly to the space conditioning system return duct airflow are not used; or
2. If the Certificate of Compliance indicates an allowance for use of a bypass duct, the bypass duct shall conform to the specifications given on the Certificate of Compliance.

If the zonally controlled system meets one of these criteria, the system complies. Otherwise the system does not comply

---

Appendix G – Verification of the Existing Features of a Home for Existing + Addition + Alteration Performance Approach

When adding to or altering an existing home, compliance credit can be taken for upgrading existing features by using the performance approach when the existing features are verified by a qualified HERS rater prior to registration of the certificate of compliance.

The performance approach provides for a means to trade off against features that may not meet the prescriptive requirements, such as exceeding the allowed maximum glass area, by demonstrating that the house to be built (proposed design) achieves the same level of efficiency as it would if it were built to the prescriptive requirements (standard design). The standard design is the hypothetical house that sets the target energy budget for the proposed house.

The Existing + Addition + Alteration approach gives further credit for upgrading existing features. It does this by lowering the standard design for an altered building feature down to match the existing energy efficiency of the building feature before it is altered. The greater the efficiency of the altered building feature is relative to the existing energy efficiency, the greater the compliance credit will be. Third-party verification of the features prior to the construction is required to receive this compliance credit. The credit level depends on whether defaults are used or actual values (that are less efficient than defaults) are used.

The proposed design is calculated using the actual energy efficiency values of the existing unaltered components of the existing house, as well as the proposed values of the altered components, plus the proposed features of the addition. Each building component must be modeled correctly as one of the following classifications below in order to determine the proposed design:

1. "Existing" – these building components remain unchanged by the alterations or additions (e.g., insulated exterior walls in the existing portion of the home that will not be touched).
2. "Altered" – these building components exist prior to the remodel, but are being changed (e.g., roof insulation that will be added as part of the construction work, or a furnace that is being replaced as part of the construction work).
3. "New" – these building components do not exist prior to the construction work. (e.g., new walls added to create the addition).

All of these building components will determine how the standard design is calculated. Existing features will be modeled the same in both the proposed and standard designs. New features will be modeled in the standard design according to prescriptive package A, Table 150.1-A. Altered features will be modeled in the standard design according to Table 150.2-B.

There are two columns in Table 150.2-B. One column details how the standards design is calculated for altered components when the existing features are not verified by a HERS rater. The other column

details how the standards design is calculated for altered components when the existing features are verified by a HERS rater prior to construction. Without HERS verification, the standard design for existing features is calculated using the prescriptive or mandatory measures according to Table 150.2-B.

In order for the building to comply, the proposed design (proposed house) must be equal to or less than the standard design (standard house) in order to comply. The existing portions of the proposed house will be compared to the existing portions of the standard house, the efficiencies of which are determined by Table 150.2-B. When a feature in the proposed house is better than the standard house, it is referred to as a compliance credit, and it can be used to trade off against features that are less efficient than the standard house. For example, without third-party verification, attic insulation is assumed to be R-30 in the standard house. With HERS verification, attic insulation for the standard house is calculated using the existing attic insulation value, even if it is R-0. If the actual attic insulation value is substantially less than R-30, more compliance credit can be obtained by having it HERS verified.

Example:
Consider the house in Figure G-1 in climate zone 12. The shaded area is the addition. Some windows and walls were removed to build the addition, but these are ignored.
The existing home has the following features:

1. Single-pane metal framed windows
2. 2x4 R-11 walls, and R-19 attic insulation
3. AFUE 75 furnace

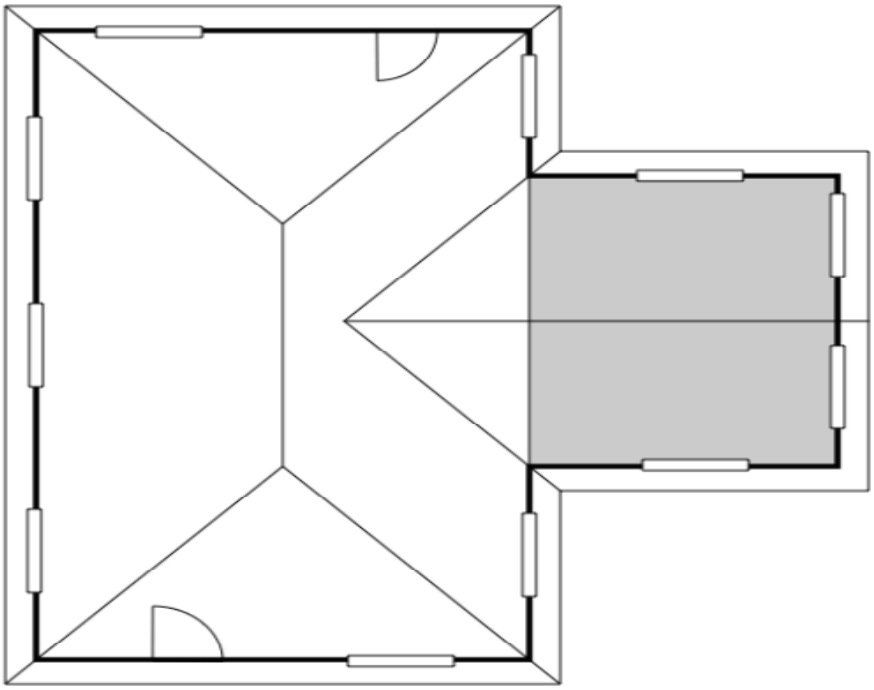

Figure G-1 – The Proposed Addition and Alterations

Component	Status	Proposed House	Standard Design w/o verification	Standard Design w/verification
Attic	Existing Altered New	 R-38 R-38	 R-30 R-38	 **R-19** R-38
Walls	Existing Altered New	 R-13	R-11 R-15+4	R-11 R-15+4
Window	Existing Altered New	 0.30/0.30 0.30/0.30	 0.40/0.35 0.32/0.25	 **1.28/0.80** 0.32/0.25
Furnace	Existing Altered New	 0.92	 0.78	 0.75

Table G-1 – Standard Design With and Without HERS Verification

Note: The standard design and the proposed design for duct sealing and roofing products is always the based on the mandatory measures in 150.2 regardless of the existing efficiency levels.

Part of the construction work includes replacing all of the windows with low-E vinyl windows to match the new windows in the addition, adding R-19 to the existing attic and reroofing the entire house with cool roof shingles. The existing furnace will be replaced with a new high efficiency furnace.

For the proposed design, none of the attic is modeled as “existing” because insulation is being added to the existing part of home, and the attic in the addition is new, so the attic will be modeled as “new” for the addition and “altered” for the existing home. Similarly, none of the roof or windows are modeled as “existing” because the all windows and the roof are being replaced on the existing home, and new ones are installed in the addition, so windows and the roof will be modeled as “new” for the addition and “altered” for the existing home. On the other hand, none of the existing walls are being altered, so they are either “existing” or “new”. The furnace, even though it is new, is modeled as “altered” because it is replacing an existing furnace. Note that the walls, windows, and other components that are removed as part of the addition and alterations are ignored and not modeled

Table G-1 illustrates how the proposed house features and the standard house features are calculated with and without HERS verification of the existing conditions. The values in **bold face** indicate where there is substantial compliance credit is gained by having HERS verification.

The HERS rater must visit the home to verify the assumptions of the existing conditions in the building, prior to registration of the certificate of compliance.

HERS raters are to follow the protocols for a Whole House Home Energy Rating (WHHER) when verifying existing conditions. The HERS rater must be trained by the providers to verify the existing conditions of the home consistent with Energy Commission approved HERS provider training for the verification requirements specified in Table 150.2-B. The Data Registry will generate a CF3R-EXC-20-H compliance document based upon the output from the Performance Compliance Software. The CF3R-EXC-20-H will list the features of the existing conditions that must be field verified by the HERS rater. A registered CF3R-EXC-20-H that agrees with the existing conditions input for the proposed building for the performance compliance calculation will be required by the HERS Registry as a prerequisite to completion of the registration of the CF1R for the project.

The Whole House Home Energy Rating protocols are established by the HERS Technical Manual (CEC-400-2008-012). Appendix A of that document details the protocols for verification of each component. Raters must follow all Energy Commission approved procedures established by the HERS provider. The HERS Technical Manual can be downloaded from:

http://www.energy.ca.gov/2008publications/CEC-400-2008-012/CEC-400-2008-012-CMF.PDF

APPENDIX A Compliance Forms

PERFORMANCE NEWLY CONSTRUCTED BUILDINGS			
CF1R-PRF-01-E	Additions; Alterations	Enforce Agency	Performance compliance method for newly constructed buildings
PRESCRIPTIVE NEWLY, ADDITIONS, AND ALTERATIONS CONSTRUCTED BUILDINGS			
CF1R-NCB-01-E	Newly Constructed Buildings	Enforce Agency	Newly Constructed Buildings and Additions Greater Than 1000 ft^2? (Prescriptive)
CF1R-ADD-01-E	Additions	Enforce Agency	Additions less than 1,000 ft^2? (Prescriptive)
CF1R-ALT-01-E	Alterations	Enforce Agency	Non-HVAC Alterations (Prescriptive) Break Out by Type
CF1R-ALT-02a-E	Alterations-HVAC	Enforce Agency	HVAC Alterations - New Ducts Greater than 40 ft Length
RCC-CF1R-ALT-02b-E	Alterations-HVAC	Enforce Agency	HVAC Alterations - Equipment or Component Changeout
CF1R-ALT-02c-E	Alterations-HVAC	Enforce Agency	HVAC Alterations - Component Changeout with All New Ducts
CF1R-ALT-02d-E	Alterations-HVAC	Enforce Agency	HVAC Alterations - Entirely New or Replacement System
CF1R-ALT-03-E	Alterations-HVAC	Enforce Agency	Paper version of ALT-HVAC for CZ 1, 3-7,16
CF1R-ALT-04-E	Alterations-HVAC	Enforce Agency	Paper version of ALT HVAC-CZ 2, 8-15
CF1R-ENV-01-E	Work Sheet	Enforce Agency	worksheet for EZ frame - opaque
CF1R-ENV-02-E	Work Sheet	Enforce Agency	Area Weighted Average Calculation Worksheet
CF1R-ENV-03-E	Work Sheet	Enforce Agency	Solar Heat Gain Coefficient (SHGC) Worksheet
CF1R-ENV-04-E	Work Sheet	Enforce Agency	Cool Roof and SRI Worksheet
CF1R-PLB-01-E	Work Sheet	Enforce Agency	Hydronic Heating System Worksheet
CF1R-SRA-01-E	Work Sheet	Enforce Agency	Solar Ready Areas

CF1R-SRA-02-E	Work Sheet	Enforce Agency	Minimum Solar Zone Area Worksheet
CF1R-STH-01-E	Work Sheet	Enforce Agency	OG 300 Solar Water Heating System Worksheet
CF1R-STH-02-E	Work Sheet	Enforce Agency	OG 100 Solar Water Heating System Worksheet
CERTIFICATE OF INSTALLATION- Non-HERS			
CF2R-ENV-01-E	Envelope-Non-HERS	Enforce Agency	Fenestration; and Site-built Fenestration
CF2R-ENV-02-E	Envelope-Non-HERS	Enforce Agency	Envelope Air Sealing Requirements
CF2R-ENV-03-E	Envelope-Non-HERS	Enforce Agency	Insulation Installation
CF2R-ENV-04-E	Envelope-Non-HERS	Enforce Agency	Roofing; Cool Roofs
CERTIFICATE OF INSTALLATION- HERS			
CF2R-ENV-20a-H	Envelope-HERS	**HERS** Rater	Building Envelope Air Leakage - Single-Point Test with Manual Meter
CF2R-ENV-20b-H	Envelope-HERS	**HERS** Rater	Building Envelope Air Leakage - Single-Point Test with Automatic Meter
CF2R-ENV-20c-H	Envelope-HERS	**HERS** Rater	Building Envelope Air Leakage - Multi-Point Test
CF2R-ENV-20d-H	Envelope-HERS	**HERS** Rater	Building Envelope Air Leakage - Repeated Single Point with Manual Meter
CF2R-ENV-20e-H	Envelope-HERS	**HERS** Rater	Building Envelope Air Leakage - Repeated Single Point with Automatic Meter
CF2R-ENV-21a-H	Envelope-HERS	**HERS** Rater	Quality Insulation Installation (QII) –Air Infiltration Sealing - Framing Stage for Batt, Loose Fill, and SPF
CF2R-ENV-21b-H	Envelope-HERS	**HERS** Rater	Quality Insulation Installation (QII) – Air Infiltration Sealing - Framing Stage for SIP and ICF
CF2R-ENV-22-H	Envelope-HERS	**HERS** Rater	Quality Insulation Installation (QII) - Air Infiltration Sealing - Ceiling/Roof Deck
CF2R-ENV-23-H	Envelope-HERS	**HERS** Rater	Quality Insulation Installation (QII) - Insulation Stage
CERTIFICATE OF VERIFICATION			
CF3R-ENV-20a-H	Envelope-HERS	**HERS** Rater	Building Envelope Air Leakage - Single-Point Test with Manual Meter
CF3R-ENV-20b-H	Envelope-HERS	**HERS** Rater	Building Envelope Air Leakage - Single-Point Test with Automatic Meter

CF3R-ENV-20c-H	Envelope-HERS	**HERS** Rater	Building Envelope Air Leakage - Multi-Point Test
CF3R-ENV-20d-H	Envelope-HERS	**HERS** Rater	Building Envelope Air Leakage - Repeated Single Point with Manual Meter
CF3R-ENV-20e-H	Envelope-HERS	**HERS** Rater	Building Envelope Air Leakage - Repeated Single Point with Automatic Meter
CF3R-ENV-21a-H	Envelope-HERS	**HERS** Rater	Quality Insulation Installation (QII)-Framing Stage - wood frame
CF3R-ENV-21b-H	Envelope-HERS	**HERS** Rater	Quality Insulation Installation (QII)-Framing Stage - sip and icf
CF3R-ENV-22-H	Envelope-HERS	**HERS** Rater	Quality Insulation Installation (QII) - Ceiling/Roof Deck - Air Infiltration Sealing
CF3R-ENV-23-H	Envelope-HERS	**HERS** Rater	Quality Insulation Installation (QII) - Insulation Stage
CERTIFICATE OF INSTALLATION – LIGHTING – Non-HERS			
CF2R-LTG-01-E	Lighting-Non-HERS	Enforce Agency	Lighting - Single Family Dwellings
CF2R-LTG-02-E	Lighting-Non-HERS	Enforce Agency	Lighting – Multi-Family Dwellings
CERTIFICATE OF INSTALLATION - PHOTOVOLTAIC			
CF2R-SPV-01a-E	Photovoltaic	Enforce Agency	PV Systems - Photo Voltaic Systems Compliance Credits
CF2R-SPV-01b-E	Photovoltaic	Enforce Agency	PV Systems - Exception to Solar Ready Area requirements
CF2R-SPV-01c-E	Photovoltaic	Enforce Agency	PV Systems - PV Compliance Credits + Exceptions to SRA requirements
CERTIFICATE OF INSTALLATION – MECHANICAL- Non-HERS			
CF2R-MCH-01-E	Mechanical-Non-HERS	Enforce Agency	HVAC Systems, Ducts and Fans and, thermostats
CF2R-MCH-02-E	Mechanical-Non-HERS	Enforce Agency	Whole House Fan
CF2R-MCH-04-E	Mechanical-Non-HERS	Enforce Agency	Evaporative Coolers
CF2R-MCH-05-E	Mechanical-Non-HERS	Enforce Agency	Ice Storage Air Conditioning (ISAC) Units

CF2R-MCH-06-E	Mechanical-Non-HERS	Enforce Agency	Verification of Air Filtration
CERTIFICATE OF INSTALLATION – MECHANICAL- HERS			
CF2R-MCH-20a-H	Mechanical-HERS	**HERS** Rater	Duct Leakage Measurement - New System
CF2R-MCH-20b-H	Mechanical-HERS	**HERS** Rater	Duct Leakage Measurement - Low Leakage Ducts in Conditioned Space – Compliance Credit
CF2R-MCH-20c-H	Mechanical-HERS	**HERS** Rater	Duct Leakage Measurement - Low Leakage Air-Handling Units
CF2R-MCH-20d-H	Mechanical-HERS	**HERS** Rater	Duct Leakage Measurement - – Altered (Existing) System
CF2R-MCH-20e-H	Mechanical-HERS	**HERS** Rater	Duct Leakage Measurement - Sealing of All Accessible Leaks
CF2R-MCH-21-H	Mechanical-HERS	**HERS** Rater	Duct Location Verification of Ducts (located entirely in directly conditioned space)
CF2R-MCH-22-H	Mechanical-HERS	**HERS** Rater	Forced Air System Fan Efficacy (Watt/cfm)
CF2R-MCH-23a-H	Mechanical-HERS	**HERS** Rater	Forced Air System Airflow Rate (cfm/ton) - Single Zone Systems or Zonally Controlled Systems with All Zones Calling - compliance using RA3.3 methods
CERTIFICATE OF VERIFICATION - MECHANICAL - HERS			
CF2R-MCH-23b-H	Mechanical-HERS	**HERS** Rater	Forced Air System Airflow Rate (cfm/ton) - Zonally Controlled Systems in Every Zonal Control Mode - compliance using RA3.3 methods
CF2R-MCH-23c-H	Mechanical-HERS	**HERS** Rater	Forced Air System Airflow Rate compliance using Alternative Compliance.

CERTIFICATE OF INSTALLATION- HERS - REFRIGERANT CHARGE VERIFICATION			
CF2R-MCH-25a-H	Mechanical-HERS	**HERS** Rater	Refrigerant Charge Verification - superheat method (Standard Charge Procedure)

CF2R-MCH-25b-H	Mechanical-HERS	HERS Rater	Refrigerant Charge Verification - Subcooling (Standard Charge Procedure)
CF2R-MCH-25c-H	Mechanical-HERS	HERS Rater	Refrigerant Charge Verification - Weigh-in Procedure
CF2R-MCH-25d-H	Mechanical-HERS	HERS Rater	Refrigerant Charge Verification - Charge Indicator Display (CID)
CF2R-MCH-25e-H	Mechanical-HERS	HERS Rater	Refrigerant Charge Verification - Winter Setup for Standard Charge Verification
CERTIFICATE OF INSTALLATION- NON-HERS - REFRIGERANT CHARGE VERIFICATION			
CF2R-MCH-25f-E	Mechanical-Non-HERS	Enforce Agency	Refrigerant Charge Verification - Packaged System Manufacturer Refrigerant Charge Certification
CERTIFICATE OF INSTALLATION- MECHANICAL- HERS			
CF2R-MCH-26-H	Mechanical-HERS	HERS Rater	Verified EER or SEER
CF2R-MCH-27a-H	Mechanical-HERS	HERS Rater	Mechanical Ventilation - Continuous Whole-Building Mechanical Ventilation Airflow - Fan Vent Rate Method
CF2R-MCH-27b-H	Mechanical-HERS	HERS Rater	Mechanical Ventilation - Continuous Whole-Building Mechanical Ventilation Airflow - Total Vent Rate Method
CF2R-MCH-27c-H	Mechanical-HERS	HERS Rater	Mechanical Ventilation - Intermittent Whole-Building Mechanical Ventilation Airflow- Fan Vent Rate Method
CF2R-MCH-27d-H	Mechanical-HERS	HERS Rater	Mechanical Ventilation - Intermittent Whole-Building Mechanical Ventilation Airflow - Total Vent Rate Method
CF2R-MCH-28-H	Mechanical-HERS	HERS Rater	Return Duct And Filter Grille Design According to Tables 150.0-C or D
CF2R-MCH-29-H	Mechanical-HERS	HERS Rater	Supply Duct Surface Area and R-Value

CF2R-MCH-30-H	Mechanical-HERS	**HERS** Rater	Ventilation cooling compliance credit
CF2R-MCH-31-H	Mechanical-HERS	**HERS** Rater	Buried Ducts and Deeply Buried Ducts
CERTIFICATE OF VERIFICATION- MECHANICAL-HERS			
CF3R-MCH-20a-H	Mechanical-HERS	**HERS** Rater	Duct Leakage Measurement - New System
CF3R-MCH-20b-H	Mechanical-HERS	**HERS** Rater	Duct Leakage Measurement - Low Leakage Ducts in Conditioned Space – Compliance Credit;
CF3R-MCH-20c-H	Mechanical-HERS	**HERS** Rater	Duct Leakage Measurement - Low Leakage Air-Handling Units
CF3R-MCH-20d-H	Mechanical-HERS	**HERS** Rater	Duct Leakage Measurement - – Altered (Existing) System
CF3R-MCH-20e-H	Mechanical-HERS	**HERS** Rater	Duct Leakage Measurement - Sealing of All Accessible Leaks
CF3R-MCH-21-H	Mechanical-HERS	**HERS** Rater	Duct Location Verification of Ducts (located entirely in directly conditioned space)
CF3R-MCH-22-H	Mechanical-HERS	**HERS** Rater	Forced Air System Fan Efficacy (Watt/cfm)
CF3R-MCH-23a-H	Mechanical-HERS	**HERS** Rater	Forced Air System Airflow Rate (cfm/ton) - Single Zone Systems or Zonally Controlled Systems with All Zones Calling - compliance using RA3.3 methods
CF3R-MCH-23b-H	Mechanical-HERS	**HERS** Rater	Forced Air System Airflow Rate (cfm/ton) - Zonally Controlled Systems in Every Zonal Control Mode - compliance using RA3.3 methods
CF3R-MCH-23c-H	Mechanical-HERS	**HERS** Rater	Forced Air System Airflow Rate compliance using Alternative Compliance using RA3.2.2.7.3 methods (best that I can do)
CF3R-MCH-25a-H	Mechanical-HERS	**HERS** Rater	Refrigerant Charge Verification - superheat method (Standard Charge Procedure)
CF3R-MCH-25b-H	Mechanical-HERS	**HERS** Rater	Refrigerant Charge Verification - Subcooling (Standard Charge Procedure)
CF3R-MCH-25c-H	Mechanical-HERS	**HERS** Rater	Refrigerant Charge Verification - Weigh-in Procedure (observation only)
CF3R-MCH-25d-H	Mechanical-HERS	**HERS** Rater	Refrigerant Charge Verification - Charge Indicator Display (CID)

CF3R-MCH-25e-H	Mechanical-HERS	**HERS** Rater	Refrigerant Charge Verification - Winter Setup for Standard Charge Verification
CF3R-MCH-26-H	Mechanical-HERS	**HERS** Rater	Verified EER or SEER
CF3R-MCH-27a-H	Mechanical-HERS	**HERS** Rater	Mechanical Ventilation - Continuous Whole-Building Mechanical Ventilation Airflow - Fan Vent Rate Method
CF3R-MCH-27b-H	Mechanical-HERS	**HERS** Rater	Mechanical Ventilation - Continuous Whole-Building Mechanical Ventilation Airflow - Total Vent Rate Method
CF3R-MCH-27c-H	Mechanical-HERS	**HERS** Rater	Mechanical Ventilation - Intermittent Whole-Building Mechanical Ventilation Airflow
CF3R-MCH-27d-H	Mechanical-HERS	**HERS** Rater	Mechanical Ventilation - Intermittent Whole-Building Mechanical Ventilation Airflow - Total Vent Rate Method
CF3R-MCH-28-H	Mechanical-HERS	**HERS** Rater	Return Duct And Filter Grille Design According to Tables 150.0-C or D
CF3R-MCH-29a-H	Mechanical-HERS	**HERS** Rater	Supply Duct Surface Area and R-Value
CF3R-MCH-29b-H	Mechanical-HERS	**HERS** Rater	Buried Ducts and Deeply Buried Ducts
CF3R-MCH-30-H	Mechanical-HERS	**HERS** Rater	Ventilation cooling compliance credit
CERTIFICATE OF INSTALLATION- NON-HERS PLUMBING			
CF2R-PLB-01-E	Plumbing-DHW-Non-HERS	Enforce Agency	Water Heating System - General Information
CF2R-PLB-02-E	Plumbing-DHW-Non-HERS	Enforce Agency	Single Dwelling Unit Hot Water System Distribution - NON-HERS Standard Distribution System (STD)
CF2R-PLB-03-E	Plumbing-DHW-Non-HERS	Enforce Agency	Multifamily Central Hot Water System Distribution - NON-HERS
CF2R-PLB-04-E	Plumbing-DHW-Non-HERS	Enforce Agency	Pool and Spa Systems
CF2R-PLB-20-H	Plumbing-DHW-HERS	**HERS** Rater	HERS - Single Dwelling Unit Hot Water System Distribution

CF2R-PLB-21-H	Plumbing-DHW-HERS	**HERS** Rater	HERS - Multifamily Central Hot Water System Distribution Multiple Recirculation Loop Design for DHW Systems Serving Multiple Dwelling Units
CF3R-PLB-20-H	Plumbing-DHW-HERS	**HERS** Rater	HERS - Single Dwelling Unit Hot Water System Distribution
CF3R-PLB-21-H	Plumbing-DHW-HERS	**HERS** Rater	HERS - Multifamily Central Hot Water System Distribution Multiple Recirculation Loop Design for DHW Systems Serving Multiple Dwelling Units
CERTIFICATE OF INSTALLATION- SOLAR THERMAL			
CF2R-STH-01-E	Solar Thermal	Enforce Agency	Solar Water Heating Systems
CERTIFICATE OF VERIFICATION – EXISTING CONDITIONS			
CF3R-EXC-20-H	Existing Conditions	**HERS** Rater	HERS Verification for Existing Conditions for performance compliance for alterations. Required as prerequisite to registration of a CF-1R-PERF-ALT doc. Note there is no Certificate of Installation version for this required.

Document Verification Responsibility

- E= Enforcement Agency
- H= HERS Rater

CERTIFICATE OF COMPLIANCE	CF1R-ADD-01-E
Additions 1,000 ft^2 or less	(Page 1 of 7)
Project Name:	Date Prepared:

A. GENERAL INFORMATION

Project Name:		**Date:**	
Project Location:		**Compliance Method:**	
CA City:		**Building Front Orientation (deg):**	
Zip Code:		**Number of Dwelling Units:**	
Climate Zone:		**Fuel Type:**	
Building Type	☐ Single Family ☐ Multi Family	**Total Conditioned Floor Area (Addition):**	
Project Type:	Addition ☐ ≤ 300 ☐ > 300 to ≤ 400 ☐ > 400 to ≤ 700 ☐ > 700 to ≤ 1000	**Slab Area:**	

B. OPAQUE SURFACE DETAILS – Framed (Section 150.2(a))

01	02	03	04	05	06		07	08	09	10	11
					Proposed					**Required**	
								Appendix JA4 Reference			
Tag/ID	Assembly Type	Frame Type	Frame Depth (inches)	Frame Spacing (inches)	Cavity R-value	Continuous Insulation R-value	U-Factor	Table	Cell	U-Factor	Comments

C. OPAQUE SURFACE DETAILS – Non-framed (Section 150.1(c)1)

01	02	03	04	05	06	07	08	09	10	11
				Proposed					**Required**	
							Appendix JA4 Reference			
Tag/ID	Assembly Type	Assembly Materials	Thickness (inches)	Core Insulation R-value	Continuous Insulation R-value	U-Factor	Table	Cell	U-Factor from Package A	Comments

For information and data collection only. Not valid until registered with a HERS provider

D. OPAQUE SURFACE DETAILS – Mass Walls (Section 150.1(c)1)

01	02	03	04	05	06		07		08	09	10		11	
					Proposed						**Required**			
					Interior Insulation		Exterior Insulation		Appendix JA4 Reference		Interior Insulation		Exterior Insulation	
Tag/ID	Walls Above Grade	Mass Type	Mass Thickness (inches)	Furring Strip Thickness (inches)	R-value	U-factor	R-value	U-factor	Table	Cell	R-value	U-factor	R-value	U-factor

E. SLAB INSULATION (Table 150.1-A)

01	02	03	04	05	06
	Proposed		**Required**		
Floor Type	R-value	U-factor	Insulation R-value	Insulation U-factor	Comments

- Heated slab floors require mandatory slab insulation (see Table 110.8-A).

F. RADIANT BARRIER (Section 150.1(c)2

01	02
Radiant Barrier installed below the roof deck and on all gable end walls	Comment

A radiant barrier is required (for Climate Zones 2-15)

- *To meet the prescriptive requirement, a minimum free ventilation area of not less than one square foot of vent area for each 300 ft2 of attic floor area with 30 percent upper vent.*
- *A minimum air space between the top surface of the radiant barrier and roof decking of not less than 1.5 inches at the center of the truss/rafter span.*
- *Radiant Barrier shall be installed to cover all gable end walls and other vertical surfaces in the attic.*

For information and data collection only. Not valid until registered with a HERS provider

G. ROOFING PRODUCTS (COOL ROOF) (Section 150.1(c)11)

01	02	03	04	05	06	07	08	09	10	11
Mass Roof 25 lb ft2 or greater	Roof Pitch	CRRC Product ID Number	Product Type	Proposed			Minimum Required			
				Aged Solar Reflectance	Thermal Emittance	SRI	Aged Solar Reflectance	Thermal Emittance	SRI	Comments

NOTES:

- Any roof area covered by building integrated photovoltaic panels and solar thermal panels are exempt from the above Cool Roof requirements.
- Liquid field applied coatings must comply with installation criteria from section 110.8(i)4.

H. FENESTRATION/GLAZING AREAS ALLOWED (Section 150.2(a)1)

01	02	03	04	05
		The Greater		
Addition Type ft^2	Orientation	Maximum Allowed %	Maximum Calculated Allowed ft^2	Comments

For information and data collection only. Not valid until registered with a HERS provider

I. FENESTRATION PROPOSED AREAS AND EFFICIENCIES (Section 150.2(a)1)

01	02	03	04	05	06	07	08	09	10	11	12
Fenestration Type	Frame Type	Orientation	Proposed West Facing Area ft^2	Proposed Non West Facing Area ft^2	Total Proposed Area All Orientations	U-factor	Source	SHGC	Source	Exterior Shading Device	Comments

a	Added West-facing Fenestration Area	
b	Maximum Allowed West-facing Fenestration Area	
c	Is West-facing Fenestration Area ≤ Allowed	
d	Added Fenestration Area (all orientations)	
e	Maximum Allowed Fenestration Area (all orientations)	
F	Is Total Proposed Fenestration Area ≤ Allowed	
g	If exterior shading devices are used, what is the calculated value from CF1R-ENV-03	

J. HVAC SYSTEMS – NEW HEATING/COOLING (Section 150.1(c)7)

01	**02**	03	04	05	06	07	08
Alteration Type	Area to be heated/cooled (ft2)	Heating System Type	Heating Efficiency	Cooling System Type	Cooling Efficiency	Thermostat Type	Comments

- The Appliance Efficiency Standards regulate the minimum efficiency requirement of regulated appliances sold in California. Any new appliance legally offered for sale will meet the minimum efficiency required for prescriptive compliance.
- Central gas furnaces have a minimum efficiency of 78% AFUE, heat pumps 7.7 HSPF. While any gas heating appliance sold in California is acceptable for prescriptive compliance, the only types of electric systems allowed are heat pumps and mini-split heat pumps.
- Central cooling systems and heat pumps have a minimum efficiency of 13 SEER.

for information and data collection only. Not valid until registered with a HERS provider

K. DUCT SYSTEMS (Section 150.2(b)1D)

01	02	03	04	05	06
Duct Alteration Type	Distribution System Type	Duct Location	Added Duct Length	Duct R-Value	Comments

- The prescriptive requirements preclude the use of bypass ducts in association with zonally controlled systems. A HERS Rater shall verify that zonally controlled systems have no bypass ducts.

L. WATER HEATING SYSTEMS (Section 150.2(a)1D for Additions)

01	02	03	04	05	06	07	08	09	10
Existing Water Heater Fuel Type	Proposed Water Heater Fuel Type	Proposed DHW Water Heater Type	Number of Added Water Heaters	Central Distribution Type	Dwelling Unit Distribution Type	Water Heater Efficiency (EF, AFUE))	Rated Input (Btuh or kWh)	Water Heater Volume (gallons)	Comments

M. WATER HEATING (Section 150.1(c)8 for New Construction)

01	02	03	04	05	06	07	08	09	10	11
Water Heater Type	Water Heating System Type	Fuel Type	Central Domestic Hot Water Distribution System	Dwelling Unit Distribution Type	Number of Water Heaters In System	Water Heater Volume (gal)	Energy Factor, AFUE, or Thermal Efficiency	Rated Input (Btuh or kW)	Standby Loss (percent of value (btuh))Rated	Back-Up Solar Savings Fraction

For information and data collection only. Not valid until registered with a HERS provider

N. HERS VERIFICATION SUMMARY The enforcement agency should pay special attention to the HERS Measures specified in this checklist below. A registered Certificate of Verification for all the measures specified shall be submitted to the building inspector before final inspection.
Ducts • Duct leakage testing required (Residential Appendix RA3.1) • Heating and cooling systems are ductless, no HERS verification required
Refrigerant Charge • Refrigerant Charge Testing is required (Residential Appendix RA3.2) in climate zones 2 and 8-15 • No cooling system installed
Central System Air Handlers • Airflow and Fan Efficacy (Residential Appendix RA3.3) or System Design • No cooling system installed • Non-ducted cooling system

For information and data collection only. Not valid until registered with a HERS provider

CERTIFICATE OF COMPLIANCE	CF1R-ADD-01-E
Additions 1,000 ft^2 or less	(Page 7 of 7)
Project Name:	Date Prepared:

DOCUMENTATION AUTHOR'S DECLARATION STATEMENT	
1. I certify that this Certificate of Compliance documentation is accurate and complete.	
Documentation Author Name:	Documentation Author Signature:
Company:	Signature Date:
Address:	CEA/ HERS Certification Identification (if applicable):
City/State/Zip:	Phone:

RESPONSIBLE PERSON'S DECLARATION STATEMENT

I certify the following under penalty of perjury, under the laws of the State of California:

1. The information provided on this Certificate of Compliance is true and correct.
2. I am eligible under Division 3 of the Business and Professions Code to accept responsibility for the building design or system design identified on this Certificate of Compliance (responsible designer).
3. That the energy features and performance specifications, materials, components, and manufactured devices for the building design or system design identified on this Certificate of Compliance conform to the requirements of Title 24, Part 1 and Part 6 of the California Code of Regulations.
4. The building design features or system design features identified on this Certificate of Compliance are consistent with the information provided on other applicable compliance documents, worksheets, calculations, plans and specifications submitted to the enforcement agency for approval with this building permit application.
5. I will ensure that a registered copy of this Certificate of Compliance shall be made available with the building permit(s) issued for the building, and made available to the enforcement agency for all applicable inspections. I understand that a registered copy of this Certificate of Compliance is required to be included with the documentation the builder provides to the building owner at occupancy.

Responsible Designer Name:	Responsible Designer Signature:
Company :	Date Signed:
Address:	License:
City/State/Zip:	Phone:

For information and data collection only. Not valid until registered with a HERS provider

For assistance or questions regarding the Energy Standards, contact the Energy Hotline at: 1-800-772-3300.

CF1R-ADD User Instructions

Minimum requirements for prescriptive addition compliance can be found in Building Energy Efficiency Standards Section 150.2(a), and Table 150.1-A (Package A). Completing these forms will require that you have the Reference Appendices for the 2013 Building Energy Efficiency Standards, which contains the Joint Appendices used to determine climate zone and to complete the section for opaque surfaces. When the term CF-1R is used it means the CF-1R-PRSC-ADD-01. Worksheets are identified by their entire name and subsequently by only the worksheet number, such as WS-02.

Instructions for sections with column numbers and row letters are given separately.

If any part of the addition does not comply, prescriptive compliance fails and the performance (or computer) compliance approach must be used. Only the new construction is required to meet the requirements specified in this documentation. If any alterations to the existing building are occurring, those are documented on one or more of the CF-1R-ALT forms.

For information and data collection only. Not valid until registered with a HERS provider

A. GENERAL INFORMATION

Project Name: Identifying information, such as owner's name.

Date: Date of document preparation.

Project Location: Legal street address of property or other applicable identifying information.

Compliance Method: Prescriptive.

CA City: Legal city/town of property.

Building Front Orientation: Building front expressed in degrees, where North = 0, East = 90, South = 180, and West = 270. The standards (section 100.1) include the following additional details for determining orientation:

- North is oriented to within 45 degrees of true north, including 45 degrees east of north;
- East is oriented to within 45 degrees of true east, including 45 degrees south of east;
- South is oriented to within 45 degrees of true south, including 45 degrees west of south;

- West is oriented to within 45 degrees of true west, including 45 degrees south of west.

Zip Code: 5-digit zip code for the project location (used to determine climate zone).

Number of Dwelling Units: 1 for single-family, 1 or more for multifamily.

Climate zone: From Joint Appendix JA2.1.1.

Fuel Type: Natural Gas, Liquefied Propane Gas, or Electricity. NOTE: prescriptive compliance only allows electricity if existing appliances are electric and natural gas is not available in the building.

Building Type: Single Family (includes duplex), or Multi Family (a building that shares common walls and common floors or ceilings).

Total Conditioned Floor Area: Enter the new conditioned floor area in ft2, as measured from the outside of exterior walls of the addition.

Project Type: Check the size of the addition as being 300 ft2 or less, greater than 300 up to 400 ft2, greater than 400 up to 700 ft2, or greater than 700 up to 1000 ft2.

Slab Area: Area of the first floor slab of the addition (if any) in ft2.

B. BUILDING INSULATION DETAILS (Section 150.2(b)1)

Additions of 700 ft2 or less require only R-13 wall insulation. Unless otherwise noted, all other requirements of Package A are required when using prescriptive compliance.

1. Tag/ID: A label (if any) from the plans, such as A1.4 or wall.
2. Assembly Type: Roof, Ceiling, Wall, Floor over crawlspace or floor over exterior.
3. Frame type: Wood or Metal.
4. Frame Depth: Nominal dimensions (in inches) of framing material such as 2x4 or 2x6.
5. Frame Spacing: 16 or 24 (inches on center).
6. Cavity R-value: Cavity R-value: insulation installed between framing members. NOTE: Wall U-factor required for all climate zones is 0.065. This U-factors can be met by wood framed 2x4 walls with R-13 cavity + R5 continuous insulation (not interrupted by framing), R-15 cavity

For information and data collection only. Not valid until registered with a HERS provider

plus R-4 continuous insulation, or any combination of cavity and/or continuous insulation that results in a U-factor equal to or less than 0.065. Continuous Insulation: R-value of rigid or continuous insulation (not interrupted by framing).

7. U-factor: The U-factor for the proposed assembly. Must be less than or equal to column 10 or have an attached CF-1R-ENV-02-E to show that a weighted U-factor for multiple assemblies will meet the maximum value in column 10.
    - NOTE: If using a weighted average of multiple assemblies to meet the required U-factor, attach form CF-1R-ENV-02-E, Area Weighted Average Calculation Worksheet.
8. Appendix JA4 Table: Table number used to determine the R-value or U-factor (e.g., an ICF wall is 4.3.13).
9. Appendix JA4 Cell: Cell number used to determine the R-value or U-factor (e.g., an 8-inch thick ICF wall with 2 inches of EPS (R-15.4) is A6).
10. Required U-factor: From Package A or from Section 150.2. Value required based on climate zone and assembly type.
11. Comments: Any notes regarding location, unique conditions, or attachments.

C. OPAQUE SURFACE DETAILS – Non-framed

1. Tag/ID: A label (if any) from the plans, for example, A1.4 or wall.
2. Assembly Type: Roof, Wall.
3. Assembly materials: SIP OSB, SIP I-Joist, see JA4 for guidance.
4. Thickness: Thickness in inches.
5. Core Insulation R-value: Insulation installed within the materials or on the inside. See Joint Appendix JA4 for guidance.
6. Continuous Insulation R-value: Insulation installed on the exterior. See Joint Appendix JA4 for guidance.
7. U-factor: Proposed assembly U-factor from JA4 or CF1R-ENV-01-E. Must be less than or equal to column 10.
8. Appendix JA4 Table: Table number used to determine the R-value or U-factor (e.g., an ICF wall is 4.3.13).
9. Appendix JA4 Cell: Cell number used to determine the R-value or U-factor (e.g., an 8-inch thick ICF wall with 2 inches of EPS (R-15.4) is A6)
10. Required Assembly U-factor from Package A: Based on assembly type and climate zone.
11. Comments: Any notes regarding location, unique conditions, or attachments.

D. OPAQUE SURFACE DETAILS – Mass Walls

1. Tag/ID: A label (if any) from the plans, for example, A1.4 or wall.
2. Walls Above Grade: Yes or No.
3. Mass Type: ICF, Masonry. See JA4 for guidance.
4. Mass Thickness: Thickness (in inches) of mass.
5. Furring Strips Thickness: If furring strips are required to meet the required wall R-value or U-factor shown in columns 12 through 15, indicate the thickness of the furring strip (in inches). See Table 4.3.14 of Joint Appendix 4.

For information and data collection only. Not valid until registered with a HERS provider

6. Interior Insulation R-value or U-factor: Enter either the R-value or U-factor of proposed insulation on the inside surface of the mass wall. See column 10 for the required insulation value for the wall type selected. See JA4 for guidance. Use the same descriptor (R-value or U-factor) throughout Table D.
7. Exterior Insulation R-value or U-factor: Enter either the R-value or U-factor of proposed insulation on the outside surface of the mass wall. See column 11 for the required insulation value for the wall type selected. See JA4 for guidance.
8. Appendix JA4 Table: Table number used to determine the R-value or U-factor (e.g., an ICF wall is 4.3.13).
9. Appendix JA4 Cell: Cell number used to determine the R-value or U-factor (e.g., an 8-inch thick ICF wall with 2 inches of EPS (R-15.4) is A6).
10. Interior Insulation: The required R-value or U-factor (whichever descriptor was selected in column 6) for interior insulation will be completed based on the Table 150.1-A requirements for the wall type.
11. Exterior Insulation: The required R-value or U-factor (whichever descriptor was selected in column 7) for exterior insulation will be completed based on the Table 150.1-A requirements for the wall type.

E. SLAB INSULATION

Slab edge performance specifications and installation criteria are found in Sections 150.0(l) and 150.1(c)1D (Table 150.1-A). Requirements vary by climate zone and slab conditions.

1. Floor type: Types include slab-on-grade or raised slab.
   - Slab-on-grade floors require slab edge insulation in climate zone 16 only.
   - Raised slab must be insulated to R8 in climate zones 1, 2, 11, 13, 14 and 16, R-4 in climate zones 12 and 15, and no insulation is required in climate zones 3-10.
2. Proposed R-value: When required, insulation can be specified by either R-value or U-factor. When specifying an R-value complete column 2.
3. Proposed U-Factor: When required, specify the U-factor of proposed insulation in column 3.
4. Required Insulation R-value: Whichever descriptor was used (R-value or U-factor) in column 2 or 3 will be used to specify the value required, which will vary by climate zone and type of slab. Values are from Table 150.1-A.
5. Required Insulation U-factor: Whichever descriptor was used (R-value or U-factor) in column 2 or 3 will be used to specify the value required, which will vary by climate zone and type of slab. Values are from Table 150.1-A.
6. Comments: Any notes regarding location, unique conditions, or attachments.

For information and data collection only. Not valid until registered with a HERS provider

NOTE: A suggestion is provided to highlight that there is a mandatory slab edge insulation requirement for heated slab floors. Since mandatory requirements are not listed on the Certificate of Compliance, this is provided for information purposes only. The specific requirements are in Sections 110.8(g) and Table 110.8-A.

F. RADIANT BARRIER

1. Radiant Barrier installed below the roof deck and on all gable end walls: Yes or No
2. Comments: Any notes regarding location, unique conditions, or attachments.

Radiant barrier performance specifications and installation criteria are found in Sections 110.8(j) and 150.1(c)2, and in Residential Appendix RA4.2.1.

Radiant barriers are required by Package A in climate zones 2-15.

G. ROOFING PRODUCTS - COOL ROOF

Roofing requirements are found in Section 110.8(i) and 150.1(c)11. Depending on the climate zone and roof slope, a cool roof (defined as a minimum aged solar reflectance and thermal emittance, or a minimum SRI) may be required by Package A.

NOTE: Exceptions include (1) additions of 300 ft2 or less, (2) low-slope roofs (pitch 2:12 or less) in climate zones 1-12, 14 and 16; (3) steep slope roof (pitch greater than 2:12) in climate zones 1-9 and 16; (4) roof constructions that have thermal mass over the roof membrane with at least 25 lb/ft2; and (5) any roof area covered by building integrated photovoltaic panels and solar thermal panels (the area of roof not covered by photovoltaic panels would still need to meet any applicable cool roof requirements).

1. Mass roof 25 lb ft2 or greater: Mass roofs are not required to have a cool roof even if the climate zone specifies minimum performance requirements.
2. Roof Pitch: Expressed as 4:12, for example, which means the roof rises 4 foot within a span of 12 feet. When roofs have multiple pitches the requirements are based on the pitch of 50% or more of the roof.
3. The CRRC Product ID Number is obtained from the Cool Roof Rating Council's Rated Product Directory at www.coolroofs.org/products/search.php. Products are listed by manufacturer, brand, type of installation, roofing material, and color, as well as product performance.
4. Product type: See Cool Roof Rating Council's directory. Generally product types include single-ply roof, wood shingles, asphalt roof, metal roof, tile roof.

For information and data collection only. Not valid until registered with a HERS provider

5. Proposed Aged Solar Reflectance: Value is from the Cool Roof Rating Council's Rated Product Directory. If the aged value is not available, calculate the SRI using the initial solar reflectance on CF1R-ENV-04-E (Cool Roof and SRI Worksheet).
6. Proposed Thermal Emittance: From the product specifications. Skip this value if using a calculated SRI.
7. Proposed SRI: It is optional to meet either the SRI or the solar reflectance/thermal emittance. To calculate the SRI value use calculation from http://www.energy.ca.gov/title24/. Enter the resulting value in the SRI Column above and attach a copy of the CF1R-ENV-04-E.
8. Minimum Required Aged Solar Reflectance: Based on climate zone and roof slope.
9. Minimum Required Thermal Emittance: Based on climate zone and roof slope.
10. Minimum SRI: Based on climate zone and roof slope.
11. Comments: Any notes regarding location, unique conditions, or attachments, such as an SRI worksheet.

If the cool roofing requirements will be met by a liquid field applied coating, Section 110.8(i)4 requires the coating be applied across the entire roof surface and meet the dry mil thickness or coverage recommended by the manufacturer.

H. FENESTRATION/GLAZING AREAS ALLOWED

The climate zone and size of the addition will affect the amount of fenestration (also known as glazing) allowed. If limited to 20%, this is calculated as Conditioned Floor Area x 0.20 = total ft^2 of fenestration allowed (20%). Fenestration areas are expressed in feet, not inches. When west-facing fenestration is limited (in climate zones 2, 4, and 6-16), it is limited to a maximum of 5%. Additions of 1,000 ft^2 or less have alternate requirements. For example, the limit may be 120 ft^2 of fenestration or 25%. While west-facing fenestration may be limited, if there is no west fenestration the upper limit remains at 120 ft^2 or 25% (or the values shown in columns 2 and 3).

1. Addition Type: ≤ 400, ≤ 700, or > 700 to $\leq 1{,}000$

Orientation: Orientation (North, East, South, West) Building Front Orientation: Building front expressed in degrees, where North = 0, East = 90, South = 180, and West = 270. The standards (section 100.1) include the following additional details for determining orientation:

- North is oriented to within 45 degrees of true north, including 45 degrees east of north;
- East is oriented to within 45 degrees of true east, including 45 degrees south of east;
- South is oriented to within 45 degrees of true south, including 45 degrees west of south;
- West is oriented to within 45 degrees of true west, including 45 degrees south of west.

In climate zones where the West-facing glazing is limited, list West-facing individually. This separation of fenestration by orientation is needed only for west-facing fenestration in climate zones 2, 4 and 6-16.

For information and data collection only. Not valid until registered with a HERS provider

The remaining fields will be completed based on climate zone and conditioned floor area of the addition.

Maximum allowed is the greater of the value in column 3 or 4.

2. Maximum Allowed (based on percent of conditioned floor area): If West-facing fenestration is limited two rows will appear. West-facing fenestration area is limited to 5%, and the maximum total fenestration area is 30% for additions up to 400 ft^2, 25% for additions greater than 400 ft^2 but no greater than 700 ft^2, and 20% of greater than 700 ft^2.

3. Maximum Allowed ft^2: If West-facing fenestration is limited, it is limited to 60 ft^2 for additions of 700 ft^2 or less, or 70 ft^2 for greater than 700 ft^2. Other orientations (or the total in the addition) are limited to 75 ft^2 for additions up to 400 ft^2, 120 for additions greater than 400 ft^2 but no greater than 700 ft^2, and 175 ft^2 for additions of greater than 700 ft^2.

	≦ 400 ft^2		**≦700 ft^2**		**> 700 to ≦ 1,000 ft^2**	
Orientation	**Percentage**	**Area**	**Percentage**	**Area**	**Percentage**	**Area**
West	5%	30	5%	60	5%	70
All Orientations	30%	75	25%	120	20%	175

NOTE: West includes any vertical fenestration oriented to within 45 degrees of true west (in either direction), including 45 degrees south of west, any skylights oriented west, and skylights facing any direction with a pitch of less than 1:12.

The values in these fields will be entered into Section I.

4. Comments: Any notes regarding location, unique conditions, or attachments.

For information and data collection only. Not valid until registered with a HERS provider

I. FENESTRATION/GLAZING PROPOSED AREAS AND EFFICIENCIES

1. Fenestration Type: Window, glass door, skylight, or glass block.
2. Fame type: Vinyl, wood, metal, metal thermal break, clad, fiberglass, or none.
3. Orientation (North, East, South, West) or in degrees. In climate zones where the West-facing glazing is limited, list West-facing individually.

4. Proposed West Facing Area ft^2: The size of any windows, doors with glass, or skylights within the floor area of the addition (combine windows with the same characteristics). West orientation includes any vertical fenestration oriented to within 45 degrees of true west, including 45 degrees south of west, any skylights oriented west, and skylights facing any direction with a pitch of less than 1:12.

   NOTE: Doors with glazing are counted in one of two ways. A door with 50% or more glazing is counted as the entire door area. A door with less than 50% glazing can be counted as the entire door area or can be calculated as the actual glass area with a 2-inch (0.17 ft) frame all around.

5. Proposed Non-West Facing Area ft^2: The size of any windows, doors with glass, or skylights within the floor area of the addition (combine windows with the same characteristics).
6. Total Proposed Area All Orientations: See row d below.
7. U-factor: Enter (a) the NFRC U-factor based on the proposed brand and type of fenestration using National Fenestration Rating Council (www.nfrc.org) certified values, (b) the default value from Table 110.6-A, or (c) the weighted average U-factor calculated on form CF1R-ENV-02-E, Area Weighted Average Calculation Worksheet. If any products (other than the exceptions) have a higher U-factor than 0.32, first complete a CF-1R-ENV-02-E to calculate a weighted average U-factor and attach it to the CF-1R-ADD-01-E.

   NOTES: (1) An exception allows up to 3 ft^2 of tubular skylights and up to 3 ft^2 of glazing in a door without having to meet a maximum U-factor. This field can be N/A. For up to 16 ft^2 of skylight, this value can be 0.55 or less.

   (2) If any fenestration has a U-factor greater than the maximum, with the exception of the 3 allowances for tubular skylights, glass in door, and skylights with 0.55 or less, complete a ENV-02-E and attach it to the CF-1R. If adding fenestration in climate zones with a maximum SHGC requirement, and any fenestration has an SHGC greater than required (with the exception of the 3 allowances for tubular skylights, glass in door, and skylights with 0.55 or less), complete a ENV-02-E and attach it to the CF-1R.

   (3) Dynamic glazing is a glazing system that changes its performance U-factor and SHGC based on the physical environment. Dynamic glazing includes chromogenic glazing or integrated shading systems (this does not include internally or externally mounted shading devices). If using dynamic glazing, use the lowest tested U-factor and SHGC in Columns 7 and 9.

8. Source: The source of the U-factor data for the fenestration product can be NFRC, Default, or ENV-02-E.
9. SHGC: Enter (a) the NFRC SHGC based on the proposed brand and type of fenestration using National Fenestration Rating Council (www.nfrc.org) certified values, (b) the default value from Table 110.6-B, or (c) the area weighted average SHGC calculated on form

For information and data collection only. Not valid until registered with a HERS provider

CF1R-ENV-02-E, Area Weighted Average Calculation Worksheet. If any products (other than the exceptions) have a higher SHGC than 0.25, first complete a ENV-02-E to calculate a area weighted average SHGC and attach it to the CF-1R.

10. Source: The source of the SHGC data for the fenestration product can be NFRC, Default, or ENV-02-E
11. Exterior Shading Device: If exterior shading devices are used to meet the SHGC requirement, indicate the type of device (from Table S-1 of CF1R-ENV-03-E Solar Heat Gain Coefficient Worksheet) and attach an ENV-03-E.

    NOTE: South Overhang. If using an overhang for south-facing glazing, the glazing must be fully shaded at solar noon on August 21 and substantially exposed to direct sunlight at solar noon on December 21 (see Residential Manual, Section 3.___).

12. Comments: Note any special location or comment here.

To determine compliance with allowable fenestration areas, complete rows a-g.

a. Added West-facing Fenestration Area: If limited, enter the total amount of west-facing fenestration ONLY that will be in the addition's floor area.
b. Maximum Allowed West-facing Fenestration Area: From Section H (greater of column 2 or 3.
c. Is West-facing Fenestration Area ≤ Allowed: Indicate Yes if west-facing fenestration area is less than or equal to the maximum area allowed. If No another compliance approach must be used.
d. Added Fenestration Area (all orientations): This field is to show the area of fenestration for all orientations within the floor area of the addition.
e. Maximum Allowed Total Fenestration Area (all orientations): From Section H (greater of column 2 or 3.

J. HVAC SYSTEMS – HEATING/COOLING

If an existing space system will condition an addition, the prescriptive requirements do not apply to that system (Exception 4 to Section 150.2(a)). The enforcement agencies may require verification that the capacity of the existing heating system is adequate to meet the added load of the additional conditioned floor area. Since there is no health and safety code requirement to provide cooling, the enforcement agency will not ask for verification that the capacity of the existing system is adequate to meet the added load of the additional conditioned floor area.

For information and data collection only. Not valid until registered with a HERS provider

If a new system is installed complete the following section.

1. Alteration type: Select "New" if a new system will serve the addition alone, or "Replace" if a new system is being installed to condition the existing and new space.
2. Area to be heated/cooled (ft^2): Indicate the conditioned floor area that the system will be heating and/or cooling.
3. Heating system type: Type includes furnace, central heat pump, boiler, hydronic, wood heat, wall furnace, room heater, room heat pump, or electric resistance (if it meets the exception). An exception to Section 150.1(c)6 allows electric resistance heating only when it is supplemental to another system, as indicated by a capacity of < 2 kW or 7,000 Btu/hr, and has a time-limiting control device that allows it to be operated for 30-minutes at a time.
4. Heating efficiency: For central gas heating systems, the minimum efficiency required by the appliance efficiency standards is 78% AFUE. Heat pumps have an HSPF of 7.7 or higher. Other appliance types will have different efficiency levels (e.g., a gas wall furnace may have a minimum requirement of 73% AFUE or lower, depending on the size and type). Any gas heating appliance (or heat pump) sold in California is acceptable. The only electric heating appliance allowed is a heat pump.
5. Cooling System Type: Indicate cooling system type or specify "no cooling." Categories include central air split system, central air package system, heat pump, room air or room heat pump, mini-split heat pump, or no cooling.
6. Cooling efficiency: For central cooling systems, the minimum efficiency required by the appliance efficiency standards is 13 SEER. Other appliance types will have different efficiency levels (e.g., a room air conditioner may have a minimum requirement of 9 EER (when an appliance standard is an EER this is considered equivalent to an SEER). Any cooling appliance sold in California is acceptable.
7. Thermostat type: Select a setback thermostat or an Energy Management System (EMS) for most systems, or N/A if exempt. Controls for most systems can be by a device that allows a person to program up to 4 temperature setpoints within 24 hours. See Section P.1 for more information and for a list of systems that do not have to meet the setback thermostat requirements.
8. Comments: Any notes regarding location or unique conditions.

NOTE: Ventilation Cooling or a whole house fan (a prescriptive requirement in climate zones 8-14) is not required for additions less than or equal to 1,000 ft^2. Other mandatory requirements still apply.

K. DUCT SYSTEMS

If an existing heating/cooling system is being extended to serve the addition, if less than 40 feet of new or replacement duct work is installed in either unconditioned or indirectly conditioned space (such as an attic or crawlspace) then no duct requirements are triggered. If that is the case only mandatory requirements apply. If prescriptive duct requirements are triggered, Exception 5 to Section 150.2(a) requires the existing duct

For information and data collection only. Not valid until registered with a HERS provider

system and the extended ducts to meet applicable requirements of the alteration requirements. The HERS Rater will know what requirements apply for duct leakage testing.

1. Duct Alteration Type: Select Extend (if extending the ductwork from an existing system, New (if a new system is being installed for the addition only) or Replace (if a replacement system will serve an area larger than the addition alone).
2. Distribution System Type: Select ducted, radiant floor, piping, or ductless.
3. Duct location: If the system has ducts, indicate where they will be installed. Locations include attic, garage, conditioned space, radiant floor.
4. Added Duct Length: Indicate if Less than 40 feet of duct or more than 40 feet of duct is being added or replaced. Indicate only ducts in unconditioned space.
5. Duct R-value: From Package A. Ducted systems in Climate Zones 1-10 and 12-13 require R-6 duct insulation and in climate zones 11 and 14-16 ducted systems require R-8 duct insulation. If ducts are installed in conditioned space (which must be field verified), this field will be N/A. If system is ductless this field will be N/A.
9. Comments: Any notes regarding location or unique conditions.

NOTE: When duct sealing to an existing duct system is triggered by the changes being made, a narrow exception is provided only when the existing duct system is constructed, insulated or sealed with asbestos.

L. WATER HEATING SYSTEMS FOR ADDITIONS

Water heating compliance for an addition ranges from options found in Section 150.2(a) to using any of the prescriptive options found in Section 150.1(c)8. When a water heater is added as part of an addition, there is a very simple option of adding a gas or propane water heater, 60 gallons maximum (typically 50), or instantaneous. There is also a provision for adding an electric water heater but only if the existing fuel type is electric. Changing from gas to electric is not allowed, unless the new water heater is a heat pump water heater (which meets Section 150.2(b)1Giii).

1. Existing Fuel Type: Gas, Propane or Electricity.
2. Proposed Fuel Type: Gas, Propane or Electricity.

NOTE: Electricity is only allowed if (a) the existing water heater fuel type is electric, (b) if the proposed water heater type is a heat pump water heater, or (c) the electric storage or tankless water heater is located inside the conditioned space, has no recirculation pumps, and has a solar water-heating system sized to meet 50% of the water heating requirements (see Residential Manual). Otherwise, this compliance approach cannot be used and computer performance compliance is required.

for information and data collection only. Not valid until registered with a HERS provider

3. Proposed DHW (domestic hot water) Water Heater Type: select storage, instantaneous, heat pump, or central (for multi-family).
4. Number of Added Water Heaters: Prescriptive compliance allows the addition of a single water heater.
5. Central Distribution System: Demand recirculation is required for all central distribution system in buildings with more than 8 dwelling units. If individual dwelling units are used enter n/a.
6. Dwelling Unit Distribution Type: Selections are both trunk and branch with no recirculation (standard) or recirculating with manual demand control.
7. Equipment Efficiency: For dwelling unit equipment enter the Energy Factor of the proposed water heater. The federal minimum Energy Factor for storage gas water heaters varies by tank volume. For a small water heater (75,000 Btu input or less for storage, 200,000 Btu input or less for instantaneous), the minimum energy factor is 0.58 for 50 gallons, 0.59 for 40 gallons, 0.61 for 30 gallons. Instantaneous water heaters will have an Energy Factor of 0.62 or higher, and heat pump water heaters have an energy factor of 2.0 or Rated Input (Btuh or Kwh): For Gas storage gas water heaters must be 75,000 Btuh or less, Instantaneous gas water heaters must be 200,000 Btuh or less. For multi-family buildings with central recirculation systems enter the AFUE or thermal efficiency of the equipment. For water heater heat pumps enter input in Kwh.
8. Rated Input: Enter the Btuh or Kwh rating for the water heater.
9. Water Heater Volume: For dwelling unit the capacity limit is no more than 60 gallons for storage water heaters. For tankless enter n/a. For central systems enter the total system storage.
10. Comments: Make any notations about conditions.

OPTIONAL – if the proposed water heating does not meet these requirements, it may be able to comply with the requirements applicable to new construction.

M. WATER HEATING SYSTEMS FOR NEW CONSTRUCTION

If the proposed added water heater does not meet the requirements of Table L, there are other options available in Section 150.1(c)8 that can be used for additions.

1.): Water heater type. Prescriptive Standards allow four options under Section 150.1(c)8 (see Section P.2 for more detailed information on these requirements.
    A. One gas or propane storage water heater for each dwelling unit, with an input of up to 75,000 Btu/hour and a storage capacity no greater than 60 gallons. Distribution system type for individual dwelling units shall be either trunk and branch (standard) with no recirculating system or a demand recirculation system with manual controls

For information and data collection only. Not valid until registered with a HERS provider

B. One gas or propane instantaneous (tankless) water heater for each dwelling unit. With an input no greater than 200,000 Btu/hour. Distribution system type is limited to either trunk and branch system (standard) with no recirculating system or a demand recirculation system with manual controls.
C. All water heaters installed must comply with Section 110.1 and 110.3. The distribution system shall be equipped with a demand recirculation control allowing pump operation to be based on measurement of hot water demand and hot water return temperature. The system shall have at least two loops. Buildings with 8 or less units do not have to comply with the demand recirculation requirement.
D. If natural gas is not available, an electric-resistance storage or instantaneous water heater with additional criteria that it be located inside the conditioned space, has no recirculation pumps, and has a solar water-heating system with a solar fraction of at least 50 percent

.

2. Water heating system type: Domestic Hot Water (DHW), Hydronic, Combined Hydronic, or Central. DHW is for domestic hot water, hydronic is a water heating system used for space heating only; combined hydronic are when the water heater will provide both space conditioning and domestic hot water. A central water heater serves multiple dwelling units in a multi-family building..
3. Fuel Type: Gas, LP (propane), electric (special conditions apply, see M.1.D and Q.4.D).
4. Central Recirculation Distribution System: For multi-family buildings with using a central distribution system a demand recirculation system with at least two distribution loops must be installed. This requirement applies to any building with eight or more units. If the system is non-central or project is individual units enter n/a.
5. Dwelling Unit Distribution Type: This shall be either trunk and branch (standard), or a manual controlled demand recirculating system.
6. Number of water heaters in system: In single-family and multi-family with water heaters in each dwelling units the value is 1. For multi-family central systems serving multiple dwelling units enter the total number of water heaters.
7. Water heater volume (gal): tank capacity in gallons. For individual water heaters for a dwelling unit this will be 60 gallons or less. If instantaneous, enter n/a. For multi-family central systems enter the total storage volume.
8. Energy Factor, AFUE or thermal efficiency: From product literature or a California Energy Commission directory.
9. Rated input (Btuh or Kwh): Enter the equipment input rating, for gas or propane fired units are Btuh, for electric fired system the units are Kwh.
10. Standby Loss (percent or Btuh): Applies only to large storage water heaters and boilers, Enter n/a for small storage or instantaneous water heaters.
11. Back-up solar savings fraction: If compliance requires a back-up solar system, indicate the solar contribution (e.g., 0.30). The system size requirements are shown below in Q.4. External calculations are required.

For information and data collection only. Not valid until registered with a HERS provider.

N. HERS MEASURES

HERS measures that are required will be listed in this section. A HERS rater will be required to complete inspections, verifications, or testing during construction of the addition. Possible verifications include:

1. Duct Leakage Testing: All duct systems must meet maximum duct leakage requirements. Typically the maximum leakage is 6% but varies for when the duct leakage test is performed and the type of building (single family, townhouse, multifamily). The only exception is if the heating and cooling systems are ductless.
2. Refrigerant Charge: Some type of refrigerant charge verification or Charge Indicator Display is required in climate zones 2 and 8-15 for most common systems such as ducted split and packaged systems, and mini-split systems. See Section 150(c)7.A. or Reference Residential Appendix RA3.2. If a building is built in climate zones 1, 3-17 or 16, or has no cooling system, no refrigerant charge verification is required.
3. Central System Air Handlers: Unless a building has no cooling system or has a non-ducted cooling system, the system must meet mandatory and prescriptive requirements for an airflow greater than 350 CFM per ton of nominal cooling capacity, and a fan efficacy less than or equal to 0.58 W/CFM. See 150.0(m)13, 150.1(c)10, and Reference Residential Appendix RA3.

DOCUMENTATION DECLARATION STATEMENTS

1. The person who prepared the CF-1R will sign and complete the fields for their name, company (if applicable), address, phone number, certification information (if applicable), date and signature (may be electronic).
2. The person who is assuming responsibility for the project being built to comply with Title 24, Part 6, will complete the fields for their name, company (if applicable), address, phone number, license number (if applicable), date and signature (may be electronic).

REGISTRATION

The CF-1R must be registered with a HERS provider prior to submitting for a building permit. See _____.

For information and data collection only. Not valid until registered with a HERS provider

REFERENCES

1. Thermostats

Thermostat requirements are found in Section 110.2(c) with special requirements for heat pumps in Section 110.2(b). Controls for most systems can be by a central energy management control system ("EMS") or a setback thermostat with a mechanism allowing a person to program up to 4 temperature setpoints within 24 hours ("setback").

EXCEPTIONS: If the heating system type is a gravity gas wall, floor or room heater, non-central electric heater, fireplace or decorative gas appliance, or wood stove, a setback thermostat or energy management control system is not required.

If the cooling system type is a room air conditioner or room air conditioner heat pump setback thermostat or energy management control system is not required.

2. Water Heaters:

Section 150.1(c) allows a limited number of conditions for water heating. If conditions other than these are proposed, the prescriptive compliance approach cannot be used:

A. 150.1(c)8A one gas or propane storage water heater, up to 75,000 Btu/hour input (typically 50 gallons or less), with either no recirculating system or a demand recirculation system with manual controls. If the Energy Factor is less than or equal to the federal minimum, it must have an R-12 external wrap. See D. below.
B. 150.1(c)8B one gas or propane instantaneous (tankless) water heater with an input of 200,000 Btu per hour or less, no storage tank, and either no recirculating system or a demand recirculation system with manual controls. .
C. 150.1(c)8C a central water-heating system that has includes the following components (1) gas or propane water heaters, boilers or other water heating equipment, (2) a water heating recirculation loop that meets the requirements of Section 110.3(c)2 and Section 110.3(c)5 equipped with automatic controls for the recirculation pump based on measurement of hot water demand and hot water return temperature, and if more than 8 dwelling units, two recirculation loops each serving half of the building; (3) a solar water-heating system with a minimum solar savings fraction of 0.20 in climate zones 1 through 9 or a minimum solar savings fraction of 0.35 in climate zones 10 through 16 (installation criteria is in Reference Residential Appendix RA4).

For information and data collection only. Not valid until registered with a HERS provider

D. 150.1(c)8D if natural gas is not available, an electric-resistance storage or instantaneous water heater with addition criteria that it be located inside the conditioned space, it has no recirculation pumps, and has a solar water-heating system with a minimum solar savings fraction of 0.50 (installation criteria is in Reference Residential Appendix RA4).

For information and data collection only. Not valid until registered with a HERS provider

CERTIFICATE OF COMPLIANCE	CF1R-ALT-01-E
Residential Alterations	(Page 1 of 5)
Project Name:	Date Prepared:

A. GENERAL INFORMATION

01	**Project Name:**		02	**Date:**	
03	**Project Location:**		04	**Compliance Method:**	
05	**CA City:**		06	**Building Front Orientation (deg or cardinal):**	
07	**Zip Code:**		08	**Number of Dwelling Units:**	
09	**Climate Zone:**		10	**Fuel Type:**	
11	**Building Type**	☐ Single Family ☐ Multi Family	12	**Total Conditioned Floor Area:**	
13	**Project Type:**	☐ Insulation ☐ Roof Replacement ☐ Fenestration/Glazing ☐ Heating System ☐ Cooling System ☐ Duct System ☐ Water Heating	14	**Slab Area:**	

B. BUILDING INSULATION DETAILS (Section 150.2(b)1)

01	02	03	04	05	06		07	08	09	10	11
					Proposed					**Required**	
								Appendix JA4 Reference			
Tag/ID	Assembly Type	Frame Type	Frame Depth (inches)	Frame Spacing (inches)	Cavity R-value	Continuous Insulation R-value	U-factor	Table	Cell	U-Factor	Comments

C. ROOF REPLACEMENT (Prescriptive Alteration, Section 150.2(b)1H)

01	02	03	04	05	06	07	08	09	10	11	12
						Proposed			**Minimum Required**		
Altering > 50% of roof surface	Roof Pitch	Exception	CRRC Product ID Number	Product Type	R-value Deck Insulation	Aged Solar Reflectance	Thermal Emittance	SRI	Aged Solar Reflectance	Thermal Emittance	SRI

NOTES

- Mass roof with 25 lb/ft2 not required to comply with cool roof requirements
- Roof area covered by building integrated photovoltaic panels and solar thermal panels are exempt from the above Cool Roof requirements.
- Liquid field applied coatings must comply with installation criteria from section 110.8(i)4.

EXCEPTION:

For information and data collection only. Not valid until registered with a HERS provider

CERTIFICATE OF COMPLIANCE	CF1R-ALT-01-E
Residential Alterations	(Page 2 of 5)
Project Name:	Date Prepared:

D. FENESTRATION/GLAZING AREAS ALLOWED (Section 150.2(b)1)

01	02	03	04	05
Alteration Type	Fenestration Type	Orientation	Maximum Allowed ft2	Comments

E. FENESTRATION/GLAZING PROPOSED AREAS AND EFFICIENCIES (Section 150.2(b)1)

01	02	03	04	05	06	07	08	09	10	11	12	13
Fenestration Type	Frame Type	Orientation	Area Removed ft2	Area Added ft2	Net Added Area ft2	Maximum Allowed U-factor	U-factor	Source	SHGC	Source	Exterior Shading Device	Comments

a	Net Added West-facing Fenestration Area	
b	Existing + Added West-facing Fenestration Area	
c	Maximum Allowed West-facing Fenestration Area	
d	Is West-facing Fenestration Area ≤ Allowed	
e	Net Added Fenestration Area (all orientations)	
f	Existing + Added Fenestration Area (all orientations)	
g	Maximum Allowed Fenestration Area (all orientations)	
h	Is Existing + Added Fenestration Area ≤ Allowed	
i	If exterior shading devices are used, what is the calculated value from CF1R-ENV-03	

For information and data collection only. Not valid until registered with a HERS provider

CERTIFICATE OF COMPLIANCE	CF1R-ALT-01-E
Residential Alterations	(Page 3 of 5)
Project Name:	Date Prepared:

F. SPACE CONDITIONING(SC) SYSTEMS – HEATING/COOLING (Prescriptive section 150.2(b))

01	**02**	03	04	05	06	07	08
Alteration Type	Floor Area Served (ft2)	Heating System Type	Heating Component Altered	Cooling System Type	Cooling Component Altered	Thermostat Type	Comments

- The Appliance Efficiency Standards regulate the minimum efficiency requirement of regulated appliances sold in California. Any new appliance legally offered for sale will meet the minimum efficiency required for prescriptive compliance.

G. DUCT SYSTEMS (Section 150.2(b)1D)

01	02	03	04	05	06
Duct Alteration Type	Distribution System Type	Duct Location	Added Duct Length	Duct R-Value	Comments
New/Replacement, Extension					

- The prescriptive requirements preclude the use of bypass ducts in association with zonally controlled systems. A HERS Rater shall verify that zonally controlled systems have no bypass ducts.

H. WATER HEATING SYSTEMS (Section 150.2(b)1G)

01	02	03	04	05	06	07	08	09
Existing Water Heater Fuel Type	Proposed DHW Water Heater Type	Proposed Water Heater Fuel Type	Proposed Water Heater Efficiency (EF, AFUE)	Water Heater Volume (gal)	Central Distribution Type	Dwelling Unit Distribution Type	Solar Water Heater Solar Fraction	Comments

For information and data collection only. Not valid until registered with a HERS Provider

CERTIFICATE OF COMPLIANCE	CF1R-ALT-01-E
Residential Alterations	(Page 4 of 5)
Project Name:	Date Prepared:

I. HERS VERIFICATION SUMMARY The enforcement agency should pay special attention to the HERS Measures specified in this checklist below. A registered Certificate of Verification for all the measures specified shall be submitted to the building inspector before final inspection.

Ducts

- Duct Leakage Testing in accordance with Section 150.2(b)1C,D, and E is required (Residential Appendix RA3.1)

Refrigerant Charge

- Refrigerant Charge Verification in accordance with Section 150.2(b)1F is required in climate zones 2 and 8-15 (Residential Appendix RA3.2).

Central System Air Handlers

- Airflow or Fan Efficacy Verification is required for ducted air cooled air conditioners and air source heat pumps in accordance with Section 150.2(b)1C, and F (Residential Appendix RA3.2. and RA3.3).

For information and data collection only. Not valid until registered with a HERS provider

CERTIFICATE OF COMPLIANCE	CF1R-ALT-01-E
Residential Alterations	(Page 5 of 5)
Project Name:	Date Prepared:

DOCUMENTATION AUTHOR'S DECLARATION STATEMENT	
1. I certify that this Certificate of Compliance documentation is accurate and complete.	
Documentation Author Name:	Documentation Author Signature:
Company:	Signature Date:
Address:	CEA/ HERS Certification Identification (if applicable):
City/State/Zip:	Phone:

RESPONSIBLE PERSON'S DECLARATION STATEMENT

I certify the following under penalty of perjury, under the laws of the State of California:

1. The information provided on this Certificate of Compliance is true and correct.
2. I am eligible under Division 3 of the Business and Professions Code to accept responsibility for the building design or system design identified on this Certificate of Compliance (responsible designer).
3. That the energy features and performance specifications, materials, components, and manufactured devices for the building design or system design identified on this Certificate of Compliance conform to the requirements of Title 24, Part 1 and Part 6 of the California Code of Regulations.
4. The building design features or system design features identified on this Certificate of Compliance are consistent with the information provided on other applicable compliance documents, worksheets, calculations, plans and specifications submitted to the enforcement agency for approval with this building permit application.
5. I will ensure that a registered copy of this Certificate of Compliance shall be made available with the building permit(s) issued for the building, and made available to the enforcement agency for all applicable inspections. I understand that a registered copy of this Certificate of Compliance is required to be included with the documentation the builder provides to the building owner at occupancy.

Responsible Designer Name:	Responsible Designer Signature:
Company :	Date Signed:
Address:	License:
City/State/Zip:	Phone:

For information and data collection only. Not valid until registered with a HERS provider

For assistance or questions regarding the Energy Standards, contact the Energy Hotline at: 1-800-772-3300.

Minimum requirements for prescriptive alteration compliance can be found in Building Energy Efficiency Standards Section 150.2(b)1.

Completing these forms will require that you have the Reference Appendices for the 2013 Building Energy Efficiency Standards. This document contains the Joint Appendices which are used to determine climate zone and to complete the section for opaque surfaces. When the term CF-1R is used it means the CF-1R-PRSC-ALT-01. Worksheets are identified by their entire name and subsequently by only the worksheet number, such as WS-02.

Instructions for sections with column numbers and row numbers are given separately.

If any part of the alteration does not comply, prescriptive compliance fails and the performance compliance approach must be used.

A. GENERAL INFORMATION

Project Name: Identifying information, such as owner's name.

Date: Date of document preparation.

Project Location: Legal street address of property or other applicable identifying information.

Compliance Method: Prescriptive.

CA City: Legal city/town of property.

Building Front Orientation: Building front expressed in degrees, where North = 0, East = 90, South = 180, and West = 270. Indicate cardinal if it is a subdivision or multi-family project that will be built in multiple orientations. The standards (section 100.1) include the following additional details for determining orientation:

- Cardinal covers all orientations (for buildings that will be built in multiple orientations);
- North is oriented to within 45 degrees of true north, including 45 degrees east of north;
- East is oriented to within 45 degrees of true east, including 45 degrees south of east;
- South is oriented to within 45 degrees of true south, including 45 degrees west of south;
- West is oriented to within 45 degrees of true west, including 45 degrees south of west.

For information and data collection only. Not valid until registered with a HERS provider

Zip Code: 5-digit zip code for the project location (used to determine climate zone).

Number of Dwelling Units: 1 for single-family, 1 or more for multifamily.

Climate zone: From Joint Appendix JA2.1.1.

Fuel Type: Natural Gas, Liquefied Propane Gas, or Electricity. NOTE: prescriptive compliance only allows electricity if existing appliances are electric and natural gas is not available in the building.

Building Type: Single Family (includes duplex), or Multi Family (a building that shares common walls and common floors or ceilings).

Total Conditioned Floor Area: Enter the new conditioned floor area in ft2, as measured from the outside of exterior walls of the dwelling unit or building being altered.

Project Type: Check all that apply – insulation, roof replacement, fenestration/glazing, heating system, cooling system, duct system, and/or water heating alteration.

Slab Area: Area of the first floor slab (if any) in ft2.

B. BUILDING INSULATION DETAILS (Section 150.2(b)1)

1. Tag/ID: A label (if any) from the plans, such as A1.4 or wall.
2. Assembly Type: Roof, Ceiling, Wall, Floor over crawlspace or floor over exterior.
3. Frame Type: Wood or Metal.
4. Frame Depth: Nominal dimensions of framing material such as 4 (if 2x4) or 6 (if 2x6).
5. Frame Spacing: 16 or 24 inches on center.
6. Cavity R-value. Insulation installed between framing.

   NOTE: Section 110.8(d) specifies that if adding insulation to an existing attic, the resulting attic insulation must total R-30. However, the amount of insulation required is limited to the amount of room available for insulation without conflicting with Building Code Section 1203.2.

7. U-factor: The U-factor for the entire wall, roof or floor assembly.

For information and data collection only. Not valid until registered with a HERS provider

8. Appendix JA4 Table: Table number used to determine the R-value or U-factor (e.g., an ICF wall is 4.3.13).
9. Appendix JA4 Cell: Cell number used to determine the R-value or U-factor (e.g., an 8-inch thick ICF wall with 2 inches of EPS (R-15.4) is A6).
10. Required U-factor: from mandatory requirements in Sections 110.0 and 150.0.
11. Comments or notes regarding location or unique condition.

C. ROOF REPLACEMENT (Prescriptive Alteration, Section 150.2(b)1H)

When 50% or more of the roof is being replaced the roofing requirements are triggered. Any areas of roof covered by building integrated photovoltaic panels and solar thermal panels (the area of roof not covered by photovoltaic panels would still need to meet any applicable cool roof requirements). Additionally, there are many alternatives/exceptions when a cool roof is required.

When the roof is steep slope (pitch greater than 2:12) the roof requirements include a cool roof in climate zones 10-15. The minimum requirement is 0.20 aged solar reflectance, 0.75 thermal emittance, or an SRI of 16.

EXCEPTIONS AND ALTERNATIVES FOR STEEP SLOPE ROOFS:

(a) Mass roof 25 lbs/ft2 or greater (uncommon situation such as sod roof);
(b) Air space 1” from top of roof deck to bottom of roofing;
(c) Roofing product has a profile ratio of rise to width of 1 to 5 for 50 percent or greater of the width of the roofing product;
(d) Ducts already meet Section 150.1(c) insulation and duct leakage requirements;
(e) Roof has R-38 insulation;
(f) Roof has a radiant barrier;
(g) No ducts are installed in the attic; or
(h) R-4 insulation above the roof deck.

In climate zones 13-15, when there is a low slope roof (pitch 2:12 or less) the cool roof requirements are for a minimum aged solar reflectance of 0.63, a minimum 0.75 thermal emittance, or a minimum SRI of 75.

EXCEPTIONS AND ALTERNATIVES FOR LOW SLOPE ROOFS:

(a) Mass roof 25 lbs/ft2 or greater (uncommon situation such as sod roof);
(b) No ducts are installed in the attic; or

For information and data collection only. Not valid until registered with a HERS provider

(c) Roof deck installation—by installing roof deck insulation, a lower aged solar reflectance is required: R-2 (0.62-0.60), R-4 (0.59-0.55), R-6 (0.54-0.50), R-8 (0.49-0.45), R-12 (0.44-0.40), R-16 (0.39-0.35), R-20 (0.34-0.30), R-24 (0.29-0.25).

Complete the fields for this section as follows:

1. Altering > 50% of roof surface: Indicate Yes or No. A yes triggers the prescriptive requirements for meeting a cool roof requirement.
2. Roof Pitch: When roofs have multiple pitches the requirements are based on the pitch of 50% or more of the roof.
3. Exception: If meeting one of the exceptions. Indicate which exception is, or will be, met.
4. The CRRC Product ID Number: obtained from the Cool Roof Rating Council's Rated Product Directory at www.coolroofs.org/products/search.php. Products are listed by manufacturer, brand, type of installation, roofing material, and color, as well as product performance.
5. Product Type: See Cool Roof Rating Council's directory. Generally product types include single-ply, wood shingles, asphalt, metal, and tile.
6. R-value Deck Insulation: If one of the exceptions selected includes adding roof deck insulation, indicate the R-value of insulation.
7. Proposed Aged Solar Reflectance: Value is from the Cool Roof Rating Council's Rated Product Directory. If the aged value is not available, calculate the SRI using the initial solar reflectance (see column 9).
8. Proposed Thermal Emittance: From the product specifications.
9. Proposed SRI: It is optional to meet either the SRI or the solar reflectance/thermal emittance. To calculate the SRI value use the Worksheet at http://www.energy.ca.gov/title24/ and enter the resulting value in the SRI Column above and attach a copy of the SRI Worksheet to the CF-1R.
10. Minimum Required Aged Solar Reflectance: auto-complete based on climate zone and roof slope.
11. Minimum Required Thermal Emittance: auto-complete based on climate zone and roof slope.
12. Minimum SRI: auto-complete based on climate zone and roof slope.

If the cool roofing requirements will be met by a liquid field applied coating, Section 110.8(i)4 requires the coating be applied across the entire roof surface and meet the dry mil thickness or coverage recommended by the manufacturer.

D. FENESTRATION/GLAZING AREAS ALLOWED

The climate zone and size of the addition will affect the amount of fenestration (also known as glazing) allowed. If limited to 20%, this is calculated as Conditioned Floor Area x 0.20 = total ft^2 of fenestration allowed (20%). Fenestration areas are expressed in feet, not inches. When west-facing fenestration is limited (in climate zones 2, 4, and 6-16), it is limited to a maximum of 5%. Additions of 1,000 ft^2 or less have alternate requirements. For example, the limit may be 120 ft^2 of fenestration or 25%. While west-facing fenestration may be limited, if there is no west fenestration the upper limit remains at 120 ft^2 or 25% (or the values shown in columns 2 and 3).

For information and data collection only. Not valid until registered with a HERS provider

The Alteration Type and Fenestration Type will affect how the standards apply and whether the fenestration area is limited. Percentages are determined as Conditioned Floor Area x 0.20 = total ft^2 of fenestration allowed (20%). Depending on the climate zone, If west-facing fenestration is limited, it is limited to a maximum of 5%. The overall total fenestration area is limited to 20%, not 25%. Fenestration areas are expressed in feet, not inches.

1. Alteration Type. Enter **Repair**, **Replace75, ReplaceALL**, **Add75**, **Add76, ReplaceSky, Add16Sky, or AddSky** as describe below:

   Repair: A repair is when glass in an existing sash and frame is replaced or replacement of sashes in an existing frame. Repairs are not required to meet any requirements of the energy efficiency standards.

   Replace75: When up to 75 ft^2 of fenestration is replaced, the replacement vertical fenestration must meet a maximum 0.40 U-factor and in climate zones 2, 4, 6-16 a maximum 0.35 SHGC.

   ReplaceAll: When all fenestration (with an area of greater than 75 ft^2) is replaced, the new fenestration product must have a maximum U-factor of 0.32 and in climate zones 2, 4, 6-16 a maximum SHGC of 0.25. This alteration does not trigger the area limits of Package A.

   Add75: When adding fenestration up to 75 ft^2, the selected fenestration product must have a maximum U-factor of 0.32 and in climate zones 2, 4, 6-16 a maximum SHGC of 0.25. This alteration does not trigger the area limits of Package A.

   Add76: When more than 75 ft^2 is added to the existing fenestration, in addition to the above requirements, the maximum fenestration area of the dwelling unit cannot exceed 20% and the maximum West-facing fenestration area (in climate zones 2, 4, 6-16) cannot exceed 5%.

   ReplaceSky: When an equal area of existing skylights is replaced, the replacement skylights must meet a maximum 0.55 U-factor and in climate zones 2, 4, 6-16 a maximum 0.30 SHGC.

   Add16Sky: When up to 16 ft^2 of skylight area is added, the product selected must meet a maximum U-factor of 0.55 and in climate zones 2, 4, 6-16 a maximum 0.30 SHGC.

   AddSky: When greater than 16 ft^2 of skylight area is added, the product selected must meet a maximum U-factor and SHGC of Table 150.1-A, which is a maximum 0.32 U-factor and in climate zones 2, 4, 6-16 a maximum 0.25 SHGC.

The remaining fields are auto completed based on alteration type, conditioned floor area, and climate zone.

For information and data collection only. Not valid until registered with a HERS provider

2. Fenestration Type:
3. Orientation: In climate zones with a west-facing limit (2, 4, 6-16), two values will be displayed, one for west and one for the other orientations (E, S, and W).
4. Maximum Allowed ft^2: If West-facing fenestration is limited two rows will appear. West-facing fenestration area is limited to 5%, and the maximum total fenestration area is 20%. Depending on the type of fenestration and the alteration type, this field may show values such as 75 ft^2 or 16 ft^2.

   The values in these fields will be entered into the lower Section E, rows c and g.

   NOTE: West includes any vertical fenestration oriented to within 45 degrees of true west, including 45 degrees south of west. For skylights, west also includes any skylight area facing any direction with a pitch of less than 1:12

5. Comments: Note any special location or comment here.

E. FENESTRATION/GLAZING PROPOSED AREAS AND EFFICIENCIES

1. Fenestration Type: Window, glass door, skylight, or glass block.
2. Fame type: Vinyl, wood, metal, metal thermal break, clad, fiberglass, or none.
3. Orientation (North, East, South, West) or in degrees. In climate zones where the West-facing glazing is limited, list west-facing individually. The definitions in the Energy Efficiency Standards include these specific details:
   - North is oriented to within 45 degrees of true north, including 45 degrees east of north;
   - East is oriented to within 45 degrees of true east, including 45 degrees south of east;
   - South is oriented to within 45 degrees of true south, including 45 degrees west of south;
   - West is oriented to within 45 degrees of true west, including 45 degrees south of west.

   Skylights in a roof pitch greater than 1:12 can be included as facing the same orientation as that portion of the roof angle. If the skylight is in a roof with a pitch less than 1:12, the skylight is assumed to face west.

4. Area Removed ft^2: The size of window(s) being replaced or removed (combine windows with the same characteristics).

   NOTE: Doors with glazing are counted in one of two ways. A door with 50% or more glazing is counted as the entire door area. A door with less than 50% glazing can be counted as the entire door area or can be calculated as the actual glass area with a 2-inch (0.17 ft^2) frame all around.

For information and data collection only. Not valid until registered with a HERS provider

5. Area Added ft^2: The size of new or replacement window(s), doors, skylights.
6. Net Added Area ft^2: The difference between columns 4 and 5 (can be a negative number if reducing the area).
7. Maximum Allowed U-factor: This field will be vary depending on the type of alteration specified in Section D.

   NOTE: For up to 3 ft^2 of tubular skylights and up to 3 ft^2 of glazing in a door, this field and column 8 can be n/a. For up to 16 ft^2 of skylight, enter 0.55.

8. U-factor: Enter (a) the NFRC U-factor based on the proposed brand and type of fenestration using National Fenestration Rating Council (www.nfrc.org) certified values, (b) the default value from Table 110.6-A, or (c) the weighted average U-factor calculated on form CF-1R-PRSC-WS-02, Area Weighted Average Calculation Worksheet. For the exceptions, up to 3 ft^2 of tubular skylights and up to 3 ft^2 of glazing in a door enter N/A, and for up to 16 ft^2 of skylight, enter 0.55. If any products (other than the exceptions) have a higher U-factor than 0.32, first complete a WS-02 to calculate a weighted average U-factor and attach it to the CF-1R.

   NOTE: Dynamic glazing is a glazing system that changes its performance U-factor and SHGC based on the physical environment. Dynamic glazing includes chromogenic glazing or integrated shading systems (this does not include internally or externally mounted shading devices). If using dynamic glazing, use the lowest tested U-factor and SHGC in Columns 8 and 11.

9. Source: NFRC, Default or WS-02. The source of the U-factor data for the fenestration product.
10. Maximum Allowed SHGC: This field will be vary depending on the type of alteration specified in Section D for climate zones 2, 4 and 6-16. In climate zones 1, 3 and 5, where there is no maximum SHGC requirement, this value is n/a.
11. Source: NFRC, Default (from Table 110.6-B) or WS-02. The source of the SHGC data for the fenestration product.
12. Exterior Shading Device: If exterior shading devices are used to meet the SHGC requirement, indicate the type of device (from Table S-1 of CF-1R-PRSC-WS-03 Solar Heat Gain Coefficient Worksheet) and attach a WS-03.

    If using an overhang for south-facing glazing, the glazing must be fully shaded at solar noon on August 21 and substantially exposed to direct sunlight at solar noon on December 21 (see Residential Manual, Section 3.___).

13. Comments: Note any special location or comment here.

To determine compliance with allowable fenestration areas, complete rows a-h.

a. Net Added West-facing Fenestration Area: If limited, enter the total amount of west-facing fenestration ONLY that will be added to the dwelling unit when alterations are complete.

For information and data collection only. Not valid until registered with a HERS provider

b. Existing + Added West-facing Fenestration Area: If more than 75 ft of fenestration is added, the dwelling unit cannot exceed 5% west-facing fenestration in climate zones 2, 4, and 6-16. Enter the area of West-facing fenestration ONLY that will be in the dwelling unit when alterations are complete.
c. Maximum Allowed West-facing Fenestration Area: Conditioned Floor Area x 0.05 (for climate zones affected).
d. Is West-facing Fenestration Area ≤ Allowed: Indicate Yes if west-facing fenestration area is less than or equal to the maximum area allowed, West-facing fenestration area is in compliance.
e. Net Added Fenestration Area (all orientations): This field is to show the net area of added fenestration for all orientations. When limited, the maximum is either up to 75 ft of added fenestration or a 20% limit is placed on the dwelling unit when alterations are complete. The total includes all existing and new fenestration, including the area of fenestration with exceptions for U-factor and SHGC.
f. Existing + Added Fenestration Area (all orientations): If more than 75 ft of fenestration is added, the dwelling unit cannot exceed 20% fenestration. Enter the area of all fenestration existing and new in the dwelling unit when alterations are complete (including West facing).
g. Maximum Allowed Total Fenestration Area (all orientations). Conditioned Floor Area x 0.20.
h. Is Existing + Added Fenestration Area ≤ Allowed: Indicate Yes if the total fenestration area is less than or equal to the maximum area allowed, the fenestration area is in compliance.
i. If exterior shading devices are used to meet the SHGC requirements, enter the value calculated on the WS-03 and attach it to the CF-1R.

NOTE: If any fenestration has a U-factor greater than the maximum, with the exception of the 3 allowances for tubular skylights, glass in door, and skylights with 0.55 or less, complete a WS-02 and attach it to the CF-1R. If adding fenestration in climate zones with a maximum SHGC requirement, and any fenestration has an SHGC greater than required (with the exception of the 3 allowances for tubular skylights, glass in door, and skylights with 0.55 or less), complete a WS-02 and attach it to the CF-1R.

For information and data collection only. Not valid until registered with a HERS provider

F. HVAC SYSTEMS – HEATING/COOLING

Requirements of the standards apply to a heating and cooling system alteration based on the type of alteration and the system type (Section 150.2(b)1). A completely new system will meet all mandatory and prescriptive requirements, which vary by climate zone (based on Section 150.2(b)1C). [NOTE: Computer performance compliance can be used to trade-off any requirements that are not mandatory.] When parts of a system are replaced, it may trigger some of the same requirements that apply to new systems and duct alterations.

Cooling System Alterations

If a new system is installed, this triggers all of the cooling system requirements of a new dwelling, as well as duct sealing requirements that apply to duct alterations, even if duct alterations are not proposed. Similar requirements are triggered if the cooling system alteration includes adding or replacing: including air handler, outdoor condensing unit or cooling coil.

In addition to requirements of some form of refrigerant charge verification, if the alteration is to a refrigerant-containing system such as compressor, condensing coil, evaporative coil, refrigerant metering device or refrigerant piping, the setback thermostat requirements of Section 110.2(c) apply.

Heating System Alterations

If a new system is installed, this triggers all system requirements for a new dwelling, as well as duct sealing requirements that apply to duct alterations, even if duct alterations are not proposed. Similar requirements are triggered if the heating system alteration includes replacing an air handler or heating coil.

Your HERS rater will know the more specific requirements that apply when the project details are known.

If altering or installing a space conditioning system, complete the following section.

1. Alteration type: Select “New” if a completely new system is being installed. Select “Alter” if parts of an existing system are being replaced. Select “Repair” if unsure of what specific changes to the system are to be made.
2. Floor Area Served (ft2): Indicate the conditioned floor area that the system will be heating and/or cooling.
3. Heating System Type: Type includes furnace, central heat pump, boiler, hydronic, wood heat, wall furnace, room heater, room heat pump, mini-split heat pump or electric resistance (if it meets the exception). An exception to Section 150.1(c)6 allows electric resistance heating only when it is supplemental to another system, as indicated by a capacity of < 2 kW or 7,000 Btu/hr, and has a time-limiting control device that allows it to be operated for 30-minutes at a time.
4. Heating Component Altered: Select all that apply from (a) condensing coil, (b) evaporator coil, (c) compressor, or (d) air handler/furnace.
5. Cooling System Type: Indicate cooling system type or specify “no cooling.” Categories include central air split system, central air package system, heat pump, room air or room heat pump, mini-split heat pump, or no cooling.
6. Cooling Component Altered: Select all that apply from (a) condensing coil, (b) evaporator coil, (c) compressor, (d) refrigerant metering device, (e) refrigerant piping, or (f) air handler/furnace.
7. Thermostat type: Typically setback or EMS. Non-central systems that are exempt (see below) are N/A.

For information and data collection only. Not valid until registered with a HERS provider

Requirements are found in Section 110.2(c) with special requirements for heat pumps in Section 110.2(b). Controls for most systems can be by a central energy management control system ("EMS") or a setback thermostat with a mechanism allowing a person to program up to 4 temperature setpoints within 24 hours ("setback").

EXEMPTIONS: If the system type is a gravity gas wall, floor or room heater, non-central electric heater, fireplace, decorative gas appliance, wood stove, room air conditioner or room heat pump, a setback thermostat or energy management control system is not required ("N/A").

NOTE: Ventilation Cooling or a whole house fan (a prescriptive requirement in climate zones 8-14) is not required for additions less than or equal to 1,000 ft2. Other mandatory requirements still apply.

6. Comments: Any notes regarding location or unique conditions.

G. DUCT SYSTEMS

If a duct system is being added or completely replaced, the duct insulation and duct sealing requirements apply as if it was a new dwelling unit. If a duct system is altered or extended (by more than 40 feet of added duct), and in some cases when the heating and/or cooling system is completely replaced or altered, duct sealing requirements are triggered. (See Section 150.2(b)1.)

The HERS Rater will know what requirements apply for duct leakage testing and the varying levels of leakage allowed based on the specifics of the building alteration.

1. Duct Alteration Type: Select Extend (if extending the ductwork from an existing system, New (if a new system is being installed for the addition only) or Replacement (if a replacement system will serve an area larger than the addition alone).
2. Distribution System Type: Select ducted, radiant floor, piping, or ductless.
3. Duct location: If the system has ducts, indicate where they will be installed. Locations include attic, garage, conditioned space, radiant floor.
4. Added Duct Length: If the alteration type is Extend, indicate the length of duct being added in unconditioned space.
5. Duct R-value: If system is New or Replacement, a ducted system in Climate Zones 1-10 and 12-13 require R-6 duct insulation, and in climate zones 11 and 14-16 ducted systems require R-8 duct insulation. If ducts are installed in conditioned space (which must be field verified), this field will be N/A. If system is ductless this field will be N/A.
6. Comments: Any notes regarding location or unique conditions.

For information and data collection only. Not valid until registered with a HERS provider

NOTE: When duct sealing to an existing duct system is triggered by the changes being made, a narrow exception is provided only when the existing duct system is constructed, insulated or sealed with asbestos.

NOTE: Some alterations to the heating and/or cooling system will trigger duct sealing requirements as shown in Section I.

H. WATER HEATING SYSTEMS

Dwelling unit water heating compliance for an alteration ranges from options found in Section 150.2(b) to using any of the prescriptive options found in Section 150.1(c)8. Water allowed includes gas or propane water heater, 60 gallons maximum or instantaneous (tankless). Dwelling Unit distribution systems are limited to trunk and branch or manual controlled demand recirculation. If there is no natural gas connected to the building, an electric water heater may be replaced with another electric water heater. However, changing from gas to electric is not allowed, unless the new water heater is a heat pump water heater (which meets section 150.2(b)1Giii). Multi-family central systems must use certified equipment as defined under Section 110.1 and 110.3.

NOTE: If the proposed installation does not meet the requirements allowed specifically for alterations, use form CF-1R-PRSC-NCB-01 to document the water heater alteration.

1. Existing Fuel Type: Gas, Propane or Electricity.
2. Proposed Water Heater Type: proposed water heater type is small storage (equipment with 75,000 Btu or less input), instantaneous (input of 200,000 Btu or less) , heat pump, or central (for multi-family).

   NOTE: Electricity is only allowed if (a) the existing water heater fuel type is electric, (b) if the proposed water heater type is a heat pump water heater, or (c) the electric storage or instantaneous water heater is located inside the conditioned space, has no recirculation pumps, and has a solar water-heating system sized to meet 50% of the water heating requirements (see Residential Manual). Otherwise, this compliance approach cannot be used and computer performance compliance is required.

3. Proposed Fuel Type: Gas, Propane or Electricity.
4. Proposed Water Heater Efficiency (EF, AFUE) for small storage, instantaneous, and heat pumps enter Energy Factor. For Central Systems enter AFUE or Thermal Efficiency for Boilers or Large Storage Gas Water Heaters.
5. Water Heater Volume: Enter volume of storage up to 60 gallons allowed for storage water heaters. For instantaneous water heaters or boilers enter n/a. For multi-family systems enter total storage.
6. Central Recirculation Distribution System: For multi-family buildings with using a central distribution system either the existing distribution system must be used or a demand recirculation system with at least two distribution loops must be installed. The two loop requirement applies to any building with eight or more units. If the system is non-central with water heaters in each unit enter n/a.

For information and data collection Only. Not valid until registered with a HERS provider

7. Dwelling Unit Distribution Type: This shall be the existing system or either trunk and branch (standard), or a manual controlled demand recirculating system.
8. Solar Water Heating Solar Fraction: For installations of electric water heaters a solar water heating system must be installed with a fraction of at least 50 percent.
9. Comments: Note any special location or comment here.

I. HERS MEASURES

HERS measures that are required will be listed in this section. A HERS rater will be required to complete inspections, verifications, or testing during construction of the addition. Possible verifications include:

1. Duct Leakage Testing: All duct systems must meet maximum duct leakage requirements. Typically the maximum leakage is 6% but varies for when the duct leakage test is performed and the type of building (single family, townhouse, multifamily). The only exception is if the heating and cooling systems are ductless.
2. Refrigerant Charge: Some type of refrigerant charge verification or Charge Indicator Display is required in climate zones 2 and 8-15 for most common systems such as ducted split and packaged systems, and mini-split systems. See Section 150(c)7.A. or Reference Residential Appendix RA3.2. If a building is built in climate zones 1, 3-17 or 16, or has no cooling system, no refrigerant charge verification is required.
3. Central System Air Handlers: Unless a building has no cooling system or has a non-ducted cooling system, the system must meet mandatory and prescriptive requirements for an airflow greater than 350 CFM per ton of nominal cooling capacity, and a fan efficacy less than or equal to 0.58 W/CFM. See 150.0(m)13, 150.1(c)10, and Reference Residential Appendix RA3.

SIGNATURES

1. The person who prepared the CF-1R will sign and complete the fields for their name, company (if applicable), address, phone number, certification information (if applicable), date and signature (may be electronic).
2. The person who is assuming responsibility for the project being built to comply with Title 24, Part 6, will complete the fields for their name, company (if applicable), address, phone number, license number (if applicable), date and signature (may be electronic).

REGISTRATION

1. The CF-1R must be registered with a HERS provider prior to submitting for a building permit. See _____.

For information and data collection only. Not valid until registered with a HERS provider

ALTERATION TO AN HVAC SYSTEM

Project Name:	Date Prepared:

A. GENERAL INFORMATION

01	Project Name:		02	Date Prepared:	
03	Project Location:		04	Building Type:	
05	CA City:		06	Dwelling Unit Name:	
07	Zip Code:		08	HVAC System Identification or Name:	
09	Climate Zone:		10	CFA served by HVAC System (ft2):	
11	Alteration Type:		12	HVAC System Location or Area Served	

B. ALT-02a – Extension of Existing Duct System, Greater Than 40 Feet (Section150.2(b)1Diib)

01	02	03		04	05	06		07	08	09
Heating System Type	Altered Heating Component	Required Min Heating Efficiency AFUE or	HSPF	Cooling System Type	Altered Cooling Components	Required Min Condenser Efficiency SEER or	EER	Required Thermostat Type	New or Replaced Duct Length (ft)	Req'd Min New Duct R-Value

C. Certificate of Installation Documents Required

CF2R-MECH-01-E

CF2R MECH-20-H – Duct Leakage

D. Certificate of Verification Documents Required

CF3R MECH-20-H – Duct Leakage

For information and data collection only. Not valid until registered with a HERS Provider

CERTIFICATE OF COMPLIANCE	CF1R-ALT-02-E
Alteration to an HVAC System	(Page 2 of 2)
Project Name:	Date Prepared:

DOCUMENTATION AUTHOR'S DECLARATION STATEMENT	
1. I certify that this Certificate of Compliance documentation is accurate and complete.	
Documentation Author Name:	Documentation Author Signature:
Company:	Signature Date:
Address:	CEA/ HERS Certification Identification (if applicable):
City/State/Zip:	Phone:

RESPONSIBLE PERSON'S DECLARATION STATEMENT

I certify the following under penalty of perjury, under the laws of the State of California:

1. The information provided on this Certificate of Compliance is true and correct.
2. I am eligible under Division 3 of the Business and Professions Code to accept responsibility for the building design or system design identified on this Certificate of Compliance (responsible designer).
3. That the energy features and performance specifications, materials, components, and manufactured devices for the building design or system design identified on this Certificate of Compliance conform to the requirements of Title 24, Part 1 and Part 6 of the California Code of Regulations.
4. The building design features or system design features identified on this Certificate of Compliance are consistent with the information provided on other applicable compliance documents, worksheets, calculations, plans and specifications submitted to the enforcement agency for approval with this building permit application.
5. I will ensure that a registered copy of this Certificate of Compliance shall be made available with the building permit(s) issued for the building, and made available to the enforcement agency for all applicable inspections. I understand that a registered copy of this Certificate of Compliance is required to be included with the documentation the builder provides to the building owner at occupancy.

Responsible Designer Name:	Responsible Designer Signature:
Company :	Date Signed:
Address:	License:
City/State/Zip:	Phone:

For information and data collection only. Not valid until registered with a HERS provider

For assistance or questions regarding the Energy Standards, contact the Energy Hotline at: 1-800-772-3300.

A. GENERAL INFORMATION

1. Enter the Name of the project ex. Smith Changeout. Use a name that is unique and identifiable.
2. Enter the date this CF1R was prepared.
3. Enter the Project Location. Ex. Black Oak Subdivision, Hillcrest Apts. This allows more specification than just the city.
4. Enter the building type (Single Family or Multi Family). Multi family projects applies only to low-rise multifamily projects of three or fewer stories. High-rise multifamily projects fall under the non-residential standards.
5. Enter the name of the CA city that the project is in. Utilize the legal description as my be found on the deed or title.
6. Enter Dwelling Unit Name. Used for apartments with the same address but includes a unit number.
7. Enter Zip code of project.
8. Enter HVAC Identification or Name. Used to distinguish systems from each other in homes with more than one system. Ex. Upstairs system, living area system, zone 4, etc.
9. Enter Climate Zone where project is located. It is very important to enter the correct climate zone. Climate zone descriptions can be found in Joint Appendix JA2. Interactive and downloadable maps can be found at http://www.energy.ca.gov/maps/renewable/building_climate_zones.html
10. Enter the conditioned floor area served by the unit. For HVAC-only alterations, this can be an approximate number.
11. Alteration Type:
    Determine the work being done and match with one of four options below.
    a. **"Extension of Existing System"** – refer to section 150.2(b)1Diib of the Standards for the exact definition.
        - 40 feet of new ducts added or replaced and
        - After work is completed less than 75% of the duct system including, boots, air handler, plenums, duct material is new, or parts of the duct system are not accessible.
        - Air handler, condenser, coil or other refrigerant containing equipment is not being added or replaced.

    REQUIRED:
        - CF2R-MECH-01-E - Space Conditioning System Information
            - Duct insulation: new plenums R6, new duct ducting R-6 in CZ 2, 8, 9, 10, 12, and 13. R-8 in CZ 14, and 15.

    MAY BE REQUIRED: (Some exceptions apply. To be determined.)
        - CF2R & CF3R-MECH-20-H – Duct Leakage
            - 15% duct leakage testing.

    b. **"Altered Space-Conditioning System"** – refer to section 150.2(b)1E and F of the Standards for the exact definition.
        - aka "HVAC Changeout"
        - addition or replacement of package unit or air handler, outdoor condensing unit or indoor coil of a split system or air conditioner or heat pump.
        - Replacement of any refrigerant containing device in ducted central AC system.

For information and data collection only. Not valid until registered with a HERS provider

- May also include new ducts or duct replacement.
- Does not meet the definition of an "Entirely New or Complete Replacement Duct System" or "Entirely New or Complete Replacement Space Conditioning System", below.

REQUIRED:

- CF2R-MECH-01-E - Space Conditioning System Information
  - Duct insulation: new plenums R6, new duct ducting R-6 in CZ 2, 8, 9, 10, 12, and 13. R-8 in CZ 14, and 15.
  - Upgrade to setback thermostat

MAY BE REQUIRED: (Some exceptions apply. To be determined.)

- CF2R & CF3R-MECH-20-H – Duct Leakage
  - 15% duct leakage testing.
- CF2R & CF3R-MECH-25-H – Refrigerant Charge Verification
  - In **Climate Zones 8 to 15** for HVAC Changeout (packaged, split, and mini-split) or a space-conditioning system of either a air conditioner or heat pump is altered by the installation or replacement of refrigerant-containing system components such as the compressor, condensing coil, evaporator coil, refrigerant metering device, or lineset.

c. **"Entirely New or Complete Replacement Duct System with or without Equipment Changeout"** – refer to section 150.2(b)1Diia and 150.2(b)1E and F of the Standards for the exact definition.

- New Duct System - At least 75 percent new duct material (up to 25 percent may consist of reused parts from the dwelling unit's existing duct system, e.g. boots, plenums, duct material), all ducts are accessible at some point during work
- Does not meet the definition of an "Entirely New or Complete Replacement Space Conditioning System", below.

REQUIRED:

- CF2R-MECH-01-E – Space Conditioning System Information
  - Duct insulation: new plenums R6, new duct ducting R-6 in CZ 2, 8, 9, 10, 12, and 13. R-8 in CZ 14, and 15.
  - Upgrade to setback thermostat
  - MERV 6 air filter

MAY BE REQUIRED: (Some exceptions apply. To be determined.)

- CF2R & CF3R-MECH-20-H – Duct Leakage
  - 6% duct leakage testing.
- CF2R & CF3R-MECH-25-H – Refrigerant Charge Verification
  - In **Climate Zones 8 to 15** for HVAC Changeout (packaged, split, and mini-split) or a space-conditioning system of either a air conditioner or heat pump is altered by the installation or replacement of refrigerant-containing system components such as the compressor, condensing coil, evaporator coil, refrigerant metering device, or lineset.

For information and data collection only. Not valid until registered with a HERS provider

- CF2R MECH-22-H – Fan Efficacy
  - fan watt draw .58 W/CFM
- CF2R MECH-23-H - Airflow
  - airflow at 350 CFM/ton

d. **"Entirely New or Complete Replacement Space Conditioning System"** – refer to section 150.2(b)1C of the Standards for the exact definition.

- New Duct System - At least 75 percent new duct material (up to 25 percent may consist of reused parts from the dwelling unit's existing duct system, e.g. boots, plenums, duct material), all ducts are accessible at some point during work.
- New or newly replaced package unit or complete split system. All equipment is new.

REQUIRED:

- CF2R-MECH-01-E – Space Conditioning System Information
  - Duct insulation: new plenums R6, new duct ducting R-6 in CZ 2, 8, 9, 10, 12, and 13. R-8 in CZ 14, and 15.
  - Upgrade to setback thermostat
  - MERV 6 air filter

MAY BE REQUIRED: (Some exceptions apply. To be determined.)

- CF2R & CF3R-MECH-20-H – Duct Leakage
  - 6% duct leakage testing.
- CF2R & CF3R-MECH-25-H – Refrigerant Charge Verification
  - In **Climate Zones 8 to 15** for HVAC Changeout (packaged, split, and mini-split) or a space-conditioning system of either a air conditioner or heat pump is altered by the installation or replacement of refrigerant-containing system components such as the compressor, condensing coil, evaporator coil, refrigerant metering device, or lineset.
- CF2R MECH-22-H – Fan Efficacy
  - fan watt draw .58 W/CFM
- CF2R MECH-23-H - Airflow
  - airflow at 350 CFM/ton

12. Specify area (zone) system will be conditioning (whole house, upstairs, downstairs, etc.) Used to distinguish systems from each other in homes with more than one system.

B. ALT-02a - New Ducts Greater than 40 Ft Length

1. This box does not apply because HVAC equipment is not being altered.
2. This box does not apply because HVAC equipment is not being altered.
3. This box does not apply because HVAC equipment is not being altered.

For information and data collection only. Not valid until registered with a HERS provider

4. This box does not apply because HVAC equipment is not being altered
5. This box does not apply because HVAC equipment is not being altered
6. This box does not apply because HVAC equipment is not being altered
7. This box does not apply because only changing ducts does not trigger the thermostat requirement.
8. Input the approximate length of new duct expected to be installed, either to replace or add to existing ducts. The important break point is at 40 feet.
9. This value is auto-filled based on the climate zone. Possible entries are R-6 in CZ 1-10, 12, 13; or R8 in CZ 11, 14-16.

For information and data collection only. Not valid until registered with a HERS provider

ALTERATION TO AN HVAC SYSTEM

CERTIFICATE OF COMPLIANCE	CF1R-ALT-02-E
Alteration to an HVAC System	(Page 1 of 2)
Project Name:	Date Prepared:

A. GENERAL INFORMATION

01	Project Name:		02	Date Prepared:	
03	Project Location:		04	Building Type:	
05	CA City:		06	Dwelling Unit Name:	
07	Zip Code:		08	HVAC System Identification or Name:	
09	Climate Zone:		10	CFA served by HVAC System (ft2):	
11	Alteration Type:		12	HVAC System Location or Area Served	

B. ALT-02b – Altered Space Conditioning System (Sections 150.2(b)1E and F)

01	02	03		04	05	06		07	08	09
Heating System Type	Altered Heating Component	Required Min Heating Efficiency AFUE or	HSPF	Cooling System Type	Altered Cooling Components	Required Min Condenser Efficiency SEER or	EER	Required Thermostat Type	New or Replaced Duct Length (ft)	Req'd Min New Duct R-Value

C. Certificate of Installation Documents Required

- CF2R-MECH-01-E
- CF2R MECH-20-H – Duct Leakage
- CF2R MECH-25-H – Refrigerant Charge
- CF2R MECH-23-H - Airflow

D. Certificate of Verification Documents Required

- CF3R MECH-20-H – Duct Leakage
- CF3R MECH-25-H – Refrigerant Charge
- CF3R MECH-23-H - Airflow

For information and data collection only. Not valid until registered with a HERS Provider

CERTIFICATE OF COMPLIANCE	CF1R-ALT-02-E
Alteration to an HVAC System	(Page 2 of 2)
Project Name:	Date Prepared:

DOCUMENTATION AUTHOR'S DECLARATION STATEMENT	
1. I certify that this Certificate of Compliance documentation is accurate and complete.	
Documentation Author Name:	Documentation Author Signature:
Company:	Signature Date:
Address:	CEA/ HERS Certification Identification (if applicable):
City/State/Zip:	Phone:

RESPONSIBLE PERSON'S DECLARATION STATEMENT

I certify the following under penalty of perjury, under the laws of the State of California:

1. The information provided on this Certificate of Compliance is true and correct.
2. I am eligible under Division 3 of the Business and Professions Code to accept responsibility for the building design or system design identified on this Certificate of Compliance (responsible designer).
3. That the energy features and performance specifications, materials, components, and manufactured devices for the building design or system design identified on this Certificate of Compliance conform to the requirements of Title 24, Part 1 and Part 6 of the California Code of Regulations.
4. The building design features or system design features identified on this Certificate of Compliance are consistent with the information provided on other applicable compliance documents, worksheets, calculations, plans and specifications submitted to the enforcement agency for approval with this building permit application.
5. I will ensure that a registered copy of this Certificate of Compliance shall be made available with the building permit(s) issued for the building, and made available to the enforcement agency for all applicable inspections. I understand that a registered copy of this Certificate of Compliance is required to be included with the documentation the builder provides to the building owner at occupancy.

Responsible Designer Name:	Responsible Designer Signature:
Company :	Date Signed:
Address:	License:
City/State/Zip:	Phone:

For assistance or questions regarding the Energy Standards, contact the Energy Hotline at: 1-800-772-3300

For information and data collection only. Not valid unregistered with a HERS provider

A. GENERAL INFORMATION

1. Enter the Name of the project ex. Smith Changeout. Use a name that is unique and identifiable.
2. Enter the date this CF1R was prepared.
3. Enter the Project Location. Ex. Black Oak Subdivision, Hillcrest Apts. This allows more specification than just the city.
4. Enter the building type (Single Family or Multi Family). Multi family projects applies only to low-rise multifamily projects of three or fewer stories. High-rise multifamily projects fall under the non-residential standards.
5. Enter the name of the CA city that the project is in. Utilize the legal description as my be found on the deed or title.
6. Enter Dwelling Unit Name. Used for apartments with the same address but includes a unit number.
7. Enter Zip code of project.
8. Enter HVAC Identification or Name. Used to distinguish systems from each other in homes with more than one system. Ex. Upstairs system, living area system, zone 4, etc.
9. Enter Climate Zone where project is located. It is very important to enter the correct climate zone. Climate zone descriptions can be found in Joint Appendix JA2. Interactive and downloadable maps can be found at http://www.energy.ca.gov/maps/renewable/building_climate_zones.html
10. Enter the conditioned floor area served by the unit. For HVAC-only alterations, this can be an approximate number.
11. Alteration Type:
    Determine the work being done and match with one of four options below.
    a. **"Extension of Existing System"** – refer to section 150.2(b)1Diib of the Standards for the exact definition.
        - 40 feet of new ducts added or replaced and
        - After work is completed less than 75% of the duct system including, boots, air handler, plenums, duct material is new, or parts of the duct system are not accessible.
        - Air handler, condenser, coil or other refrigerant containing equipment is not being added or replaced.

    REQUIRED:
        - CF2R-MECH-01-E - Space Conditioning System Information
            - Duct insulation: new plenums R6, new duct ducting R-6 in CZ 2, 8, 9, 10, 12, and 13. R-8 in CZ 14, and 15.

    MAY BE REQUIRED: (Some exceptions apply. To be determined.)
        - CF2R & CF3R-MECH-20-H – Duct Leakage
            - 15% duct leakage testing.

    b. **"Altered Space-Conditioning System"** – refer to section 150.2(b)1E and F of the Standards for the exact definition.
        - aka "HVAC Changeout"

For information and data collection only. Not valid until registered with a HERS provider

- addition or replacement of package unit or air handler, outdoor condensing unit or indoor coil of a split system or air conditioner or heat pump.
- Replacement of any refrigerant containing device in ducted central AC system.
- May also include new ducts or duct replacement.
- Does not meet the definition of an "Entirely New or Complete Replacement Duct System" or "Entirely New or Complete Replacement Space Conditioning System", below.

REQUIRED:

- CF2R-MECH-01-E - Space Conditioning System Information
  - Duct insulation: new plenums R6, new duct ducting R-6 in CZ 2, 8, 9, 10, 12, and 13. R-8 in CZ 14, and 15.
  - Upgrade to setback thermostat

MAY BE REQUIRED: (Some exceptions apply. To be determined.)

- CF2R & CF3R-MECH-20-H – Duct Leakage
  - 15% duct leakage testing.
- CF2R & CF3R-MECH-25-H – Refrigerant Charge Verification
  - In **Climate Zones 8 to 15** for HVAC Changeout (packaged, split, and mini-split) or a space-conditioning system of either a air conditioner or heat pump is altered by the installation or replacement of refrigerant-containing system components such as the compressor, condensing coil, evaporator coil, refrigerant metering device, or lineset.

c. **"Entirely New or Complete Replacement Duct System with or without Equipment Changeout"** – refer to section 150.2(b)1Diia and 150.2(b)1E and F of the Standards for the exact definition.

- New Duct System - At least 75 percent new duct material (up to 25 percent may consist of reused parts from the dwelling unit's existing duct system, e.g. boots, plenums, duct material), all ducts are accessible at some point during work
- Does not meet the definition of an "Entirely New or Complete Replacement Space Conditioning System", below.

REQUIRED:

- CF2R-MECH-01-E – Space Conditioning System Information
  - Duct insulation: new plenums R6, new duct ducting R-6 in CZ 2, 8, 9, 10, 12, and 13. R-8 in CZ 14, and 15.
  - Upgrade to setback thermostat
  - MERV 6 air filter

MAY BE REQUIRED: (Some exceptions apply. To be determined.)

- CF2R & CF3R-MECH-20-H – Duct Leakage
  - 6% duct leakage testing.
- CF2R & CF3R-MECH-25-H – Refrigerant Charge Verification

For information and data collection only. Not valid until registered with a HERS provider

- In **Climate Zones 8 to 15** for HVAC Changeout (packaged, split, and mini-split) or a space-conditioning system of either a air conditioner or heat pump is altered by the installation or replacement of refrigerant-containing system components such as the compressor, condensing coil, evaporator coil, refrigerant metering device, or lineset.

- CF2R MECH-22-H – Fan Efficacy
  - fan watt draw .58 W/CFM
- CF2R MECH-23-H - Airflow
  - airflow at 350 CFM/ton

d. **"Entirely New or Complete Replacement Space Conditioning System"** – refer to section 150.2(b)1C of the Standards for the exact definition.

- New Duct System - At least 75 percent new duct material (up to 25 percent may consist of reused parts from the dwelling unit's existing duct system, e.g. boots, plenums, duct material), all ducts are accessible at some point during work.
- New or newly replaced package unit or complete split system. All equipment is new.

REQUIRED:

- CF2R-MECH-01-E – Space Conditioning System Information
  - Duct insulation: new plenums R6, new duct ducting R-6 in CZ 2, 8, 9, 10, 12, and 13. R-8 in CZ 14, and 15.
  - Upgrade to setback thermostat
  - MERV 6 air filter

MAY BE REQUIRED: (Some exceptions apply. To be determined.)

- CF2R & CF3R-MECH-20-H – Duct Leakage
  - 6% duct leakage testing.
- CF2R & CF3R-MECH-25-H – Refrigerant Charge Verification
  - In **Climate Zones 8 to 15** for HVAC Changeout (packaged, split, and mini-split) or a space-conditioning system of either a air conditioner or heat pump is altered by the installation or replacement of refrigerant-containing system components such as the compressor, condensing coil, evaporator coil, refrigerant metering device, or lineset.
- CF2R MECH-22-H – Fan Efficacy
  - fan watt draw .58 W/CFM
- CF2R MECH-23-H - Airflow
  - airflow at 350 CFM/ton

12. Specify area (zone) system will be conditioning (whole house, upstairs, downstairs, etc.) Used to distinguish systems from each other in homes with more than one system.

For information and data collection only. Not valid until registered with a HERS provider

B. ALT-02b – Altered Space Conditioning System (Sections 150.2(b)1E and F)

1. Select the appropriate heating system type from the pull down list.
2. Select the appropriate choice for heating system component being altered from the pull down list.
3. This box is auto-filled. It shows the minimum required heating system efficiency. Installed equipment may be equal to or greater than this value.
4. Select the appropriate cooling system type from the pull down list.
5. Select the appropriate choice for cooling system component being altered from the pull down list.
6. This box is auto-filled. It shows the minimum required cooling system efficiency. Installed equipment may be equal to or greater than this value.
7. This box is auto-filled. Replacing system equipment components triggers the requirement to upgrade the system thermostat to a programmable setback type thermostat.
8. Input the approximate length of new duct expected to be installed, either to replace or add to existing ducts. The important break point is at 40 feet.
9. This value is auto-filled based on the climate zone. Possible entries are R-6 in CZ 1-10, 12, 13; or R8 in CZ 11, 14-16.

For information and data collection only. Not valid until registered with a HERS provider

ALTERATION TO HVAC SYSTEM

CERTIFICATE OF COMPLIANCE	CF1R-ALT-02-E
Alteration to an HVAC System	(Page 1 of 2)
Project Name:	Date Prepared:

A. GENERAL INFORMATION

1	Project Name:		2	Date Prepared:	
3	Project Location:		4	Building Type:	
5	CA City:		6	Dwelling Unit Name:	
7	Zip Code:		8	HVAC System Identification or Name:	
9	Climate Zone:		10	CFA served by HVAC System (ft2):	
11	Alteration Type:		12	HVAC System Location or Area Served	

B. - ALT-02d - Entirely New or Complete Replacement Space Conditioning System (Section 150.2(b)1C)

1	2	3		4	5	6		7	8	9
Heating System Type	Altered Heating Component	Required Min Heating Efficiency AFUE or	HSPF	Cooling System Type	Altered Cooling Components	Required Min Condenser Efficiency SEER or	EER	Required Thermostat Type	New or Replaced Duct Length (ft)	Req'd Min New Duct R-Value

C. Certificate of Installation Documents Required

- CF2R-MECH-01-E
- CF2R MECH-20-H – Duct Leakage
- CF2R MECH-22-H – Fan Efficacy
- CF2R MECH-23-H - Airflow
- CF2R MECH-25-H – Refrigerant Charge

D. Certificate of Verification Documents Required

- CF3R MECH-20-H – Duct Leakage
- CF3R MECH-22-H – Fan Efficacy
- CF3R MECH-23-H - Airflow
- CF3R MECH-25-H – Refrigerant Charge

For information and data collection only. Not valid until registered with a HERS provider

CERTIFICATE OF COMPLIANCE	CF1R-ALT-02-E
Alteration to an HVAC System	(Page 2 of 2)
Project Name:	Date Prepared:

DOCUMENTATION AUTHOR'S DECLARATION STATEMENT	
1. I certify that this Certificate of Compliance documentation is accurate and complete.	
Documentation Author Name:	Documentation Author Signature:
Company:	Signature Date:
Address:	CEA/ HERS Certification Identification (if applicable):
City/State/Zip:	Phone:

RESPONSIBLE PERSON'S DECLARATION STATEMENT

I certify the following under penalty of perjury, under the laws of the State of California:

1. The information provided on this Certificate of Compliance is true and correct.
2. I am eligible under Division 3 of the Business and Professions Code to accept responsibility for the building design or system design identified on this Certificate of Compliance (responsible designer).
3. That the energy features and performance specifications, materials, components, and manufactured devices for the building design or system design identified on this Certificate of Compliance conform to the requirements of Title 24, Part 1 and Part 6 of the California Code of Regulations.
4. The building design features or system design features identified on this Certificate of Compliance are consistent with the information provided on other applicable compliance documents, worksheets, calculations, plans and specifications submitted to the enforcement agency for approval with this building permit application.
5. I will ensure that a registered copy of this Certificate of Compliance shall be made available with the building permit(s) issued for the building, and made available to the enforcement agency for all applicable inspections. I understand that a registered copy of this Certificate of Compliance is required to be included with the documentation the builder provides to the building owner at occupancy.

Responsible Designer Name:	Responsible Designer Signature:
Company :	Date Signed:
Address:	License:
City/State/Zip:	Phone:

For information and data collection only. Not valid until registered with a HERS provider

For assistance or questions regarding the Energy Standards, contact the Energy Hotline at: 1-800-772-3300.

A. GENERAL INFORMATION

1. Enter the Name of the project ex. Smith Changeout. Use a name that is unique and identifiable.
2. Enter the date this CF1R was prepared.
3. Enter the Project Location. Ex. Black Oak Subdivision, Hillcrest Apts. This allows more specification than just the city.
4. Enter the building type (Single Family or Multi Family). Multi family projects applies only to low-rise multifamily projects of three or fewer stories. High-rise multifamily projects fall under the non-residential standards.
5. Enter the name of the CA city that the project is in. Utilize the legal description as my be found on the deed or title.
6. Enter Dwelling Unit Name. Used for apartments with the same address but includes a unit number.
7. Enter Zip code of project.
8. Enter HVAC Identification or Name. Used to distinguish systems from each other in homes with more than one system. Ex. Upstairs system, living area system, zone 4, etc.
9. Enter Climate Zone where project is located. It is very important to enter the correct climate zone. Climate zone descriptions can be found in Joint Appendix JA2. Interactive and downloadable maps can be found at http://www.energy.ca.gov/maps/renewable/building_climate_zones.html
10. Enter the conditioned floor area served by the unit. For HVAC-only alterations, this can be an approximate number.
11. Alteration Type:
    Determine the work being done and match with one of four options below.
    a. **"Extension of Existing System"** – refer to section 150.2(b)1Diib of the Standards for the exact definition.
        - 40 feet of new ducts added or replaced and
        - After work is completed less than 75% of the duct system including, boots, air handler, plenums, duct material is new, or parts of the duct system are not accessible.
        - Air handler, condenser, coil or other refrigerant containing equipment is not being added or replaced.

    REQUIRED:
    - CF2R-MECH-01-E - Space Conditioning System Information
        - Duct insulation: new plenums R6, new duct ducting R-6 in CZ 2, 8, 9, 10, 12, and 13. R-8 in CZ 14, and 15.

    MAY BE REQUIRED: (Some exceptions apply. To be determined.)
    - CF2R & CF3R-MECH-20-H – Duct Leakage
        - 15% duct leakage testing.

    b. **"Altered Space-Conditioning System"** – refer to section 150.2(b)1E and F of the Standards for the exact definition.

For information and data collection only. Not valid until registered with a HERS provider

- aka "HVAC Changeout"
- addition or replacement of package unit or air handler, outdoor condensing unit or indoor coil of a split system or air conditioner or heat pump.
- Replacement of any refrigerant containing device in ducted central AC system.
- May also include new ducts or duct replacement.
- Does not meet the definition of an "Entirely New or Complete Replacement Duct System" or "Entirely New or Complete Replacement Space Conditioning System", below.

REQUIRED:

- CF2R-MECH-01-E - Space Conditioning System Information
  - Duct insulation: new plenums R6, new duct ducting R-6 in CZ 2, 8, 9, 10, 12, and 13. R-8 in CZ 14, and 15.
  - Upgrade to setback thermostat

MAY BE REQUIRED: (Some exceptions apply. To be determined.)

- CF2R & CF3R-MECH-20-H – Duct Leakage
  - 15% duct leakage testing.
- CF2R & CF3R-MECH-25-H – Refrigerant Charge Verification
  - In **Climate Zones 8 to 15** for HVAC Changeout (packaged, split, and mini-split) or a space-conditioning system of either a air conditioner or heat pump is altered by the installation or replacement of refrigerant-containing system components such as the compressor, condensing coil, evaporator coil, refrigerant metering device, or lineset.

c. **"Entirely New or Complete Replacement Duct System with or without Equipment Changeout"** – refer to section 150.2(b)1Diia and 150.2(b)1E and F of the Standards for the exact definition.

- New Duct System - At least 75 percent new duct material (up to 25 percent may consist of reused parts from the dwelling unit's existing duct system, e.g. boots, plenums, duct material), all ducts are accessible at some point during work
- Does not meet the definition of an "Entirely New or Complete Replacement Space Conditioning System", below.

REQUIRED:

- CF2R-MECH-01-E – Space Conditioning System Information
  - Duct insulation: new plenums R6, new duct ducting R-6 in CZ 2, 8, 9, 10, 12, and 13. R-8 in CZ 14, and 15.
  - Upgrade to setback thermostat
  - MERV 6 air filter

MAY BE REQUIRED: (Some exceptions apply. To be determined.)

- CF2R & CF3R-MECH-20-H – Duct Leakage

For information and data collection only. Not valid until registered with a HERS provider

    - 6% duct leakage testing.
- CF2R & CF3R-MECH-25-H – Refrigerant Charge Verification
    - In **Climate Zones 8 to 15** for HVAC Changeout (packaged, split, and mini-split) or a space-conditioning system of either a air conditioner or heat pump is altered by the installation or replacement of refrigerant-containing system components such as the compressor, condensing coil, evaporator coil, refrigerant metering device, or lineset.
- CF2R MECH-22-H – Fan Efficacy
    - fan watt draw .58 W/CFM
- CF2R MECH-23-H - Airflow
    - airflow at 350 CFM/ton

d. **"Entirely New or Complete Replacement Space Conditioning System"** – refer to section 150.2(b)1C of the Standards for the exact definition.
- New Duct System - At least 75 percent new duct material (up to 25 percent may consist of reused parts from the dwelling unit's existing duct system, e.g. boots, plenums, duct material), all ducts are accessible at some point during work.
- New or newly replaced package unit or complete split system. All equipment is new.

REQUIRED:
- CF2R-MECH-01-E – Space Conditioning System Information
    - Duct insulation: new plenums R6, new duct ducting R-6 in CZ 2, 8, 9, 10, 12, and 13. R-8 in CZ 14, and 15.
    - Upgrade to setback thermostat
    - MERV 6 air filter

MAY BE REQUIRED: (Some exceptions apply. To be determined.)
- CF2R & CF3R-MECH-20-H – Duct Leakage
    - 6% duct leakage testing.
- CF2R & CF3R-MECH-25-H – Refrigerant Charge Verification
    - In **Climate Zones 8 to 15** for HVAC Changeout (packaged, split, and mini-split) or a space-conditioning system of either a air conditioner or heat pump is altered by the installation or replacement of refrigerant-containing system components such as the compressor, condensing coil, evaporator coil, refrigerant metering device, or lineset.

For information and data collection only. Not valid until registered with a HERS provider

- CF2R MECH-22-H – Fan Efficacy
  - fan watt draw .58 W/CFM
- CF2R MECH-23-H - Airflow
  - airflow at 350 CFM/ton

12. Specify area (zone) system will be conditioning (whole house, upstairs, downstairs, etc.) Used to distinguish systems from each other in homes with more than one system.

B. ALT-02d - Entirely New or Complete Replacement Space Conditioning System

1. Select the appropriate heating system type from the pull down list.
2. Select the appropriate choice for heating system component being altered from the pull down list.
3. This box is auto-filled. It shows the minimum required heating system efficiency. Installed equipment may be equal to or greater than this value.
4. Select the appropriate cooling system type from the pull down list.
5. Select the appropriate choice for cooling system component being altered from the pull down list.
6. This box is auto-filled. It shows the minimum required cooling system efficiency. Installed equipment may be equal to or greater than this value.
7. This box is auto-filled. Replacing system equipment components triggers the requirement to upgrade the system thermostat to a programmable setback type thermostat.
8. Input the approximate length of new duct expected to be installed, either to replace or add to existing ducts. The important break point is at 40 feet.
9. This value is auto-filled based on the climate zone. Possible entries are R-6 in CZ 1-10, 12, 13; or R8 in CZ 11, 14-16.

For information and data collection only. Not valid until registered with a HERS provider

STATE OF CALIFORNIA

ALTERATIONS - HVAC

CEC-CF1R-ALT-03-E (Revised 06/13) CALIFORNIA ENERGY COMMISSION

CERTIFICATE OF COMPLIANCE	CF1R-ALT-03-E
Alterations - HVAC CZ 1, 3 to 7 and 16 (formerly CF-1R-ALT-HVAC)	(Page 1 of 1)

Site Address:				**Enforcement Agency:**	**Date Prepared:**	**Permit#:**
Equipment Type		Equipment Efficiency		New: Ducting, *Plenums, Lineset* Required R-value	Conditioned Floor Area (sq ft)	Thermostat
☐ Packaged System ☐ Split System ☐ Furnace	☐ Evaporator Coil ☐ Condensing Unit ☐ Lineset	_____AFUE _____SEER _____EER	_____COP _____HSPF	☐ R-6 *(CZ 1,3 -7),s* ☐ R-8[1] *(CZ 16) Ducts* ☐ R-6 (all CZ's) Plenums ☐ R-5 or R7.5 Lineset[3]	Served by system _____sq ft	☐ Setback *(If not already present, must be installed)*

HERS VERIFICATION SUMMARY Listed below are Four HVAC Alteration Options. The installer determines the work to be completed and matches it to one of the options below. All forms to be registered (no hand filled forms allowed). Copy of forms to be left on site for final inspection.

☐ **1. HVAC Changeout/Repair** **Can include new ducting**	**Required Compliance Documents to be left on site for Final**:
All Equipment, Condenser Unit, Evaporator Coil, Air Handler/Furnace	CF1R-ALT-02-E CF2R: MECH-01, MECH-20-HERS CF3R: MECH-20-HERS

Installer Requirement: Duct leakage (≤ 15% or, ≤ 10% to outside, or seal all accessible leaks)
Exempted from duct leakage testing if:
☐ 1. Duct system registered with HERS provider as previously sealed, or ☐ 2. There is less than 40 linear feet of duct in unconditioned space, or ☐ 3. Existing duct systems are constructed, insulated or sealed with asbestos (list manufacture date of building _____)

☐ 2. **New HVAC System**	**Required Compliance Documents to be left on site for Final**:
All new equipment and All New Ducts[2]	CF1R-ALT-02-E CF2R-MECH-01, MECH-20-HERS, MECH-22-HERS, MECH-(23 or 24)-HERS CF3R-MECH-20-HERS, MECH-22-HERS, MECH-(23 or 24)-HERS[2]

Installer Requirement: Duct leakage ≤ 6%, Fan Efficacy (.58W/CFM), Air Flow ≥ 350 CFM/ton (or Standards Table 150.0-C / D alternative)

☐ 3. **All New Ducts with Replacement**	**Required Compliance Documents to be left on site for Final**:
Includes replacing or installing All New Ducts[2] and one or more of the following: Condenser Unit, Evaporator Coil, Furnace	CF1R-ALT-02-E CF2R-MECH-01, MECH-20-HERS, MECH-(23 or 24)-HERS CF3R-MECH-20-HERS, MECH-(23 or 24)-HERS

Installer Requirement: Duct leakage ≤ 6%, Air Flow ≥ 350 CFM/ton (or Standards Table 150.0-C / D alternative)
☐ Exempted from duct leakage testing I existing duct systems are constructed, insulated or sealed with asbestos.

☐ 4. **New Ducting over 40 feet**	**Required Compliance Documents to be left on site for Final**:
Adding or replacing ducts in unconditioned space but less than All New Ducts[2]	CF1R-ALT-02-E CF2R: MECH-20-HERS CF3R: MECH-20-HERS

Installer Required to: Duct leakage (≤ 15% or, ≤ 10% to outside, or seal all accessible leaks)
☐ Exempted from duct leakage testing I existing duct systems are constructed, insulated or sealed with asbestos.

[1] All **new** ducting R-8 required when more than 40 ft installed and R-6 when less than 40 ft installed. This includes in walls, between floors etc.
[2] A New Duct system is when the duct system is constructed of at least 75 percent new duct material, and up to 25 percent may consist of reused parts from the dwelling unit's existing duct system (e.g., registers, grilles, boots, air handler, plenums, duct material.
[3] R-5 (1" thick insulation) for linesets 1" and less. R-7.5 (1.5" thick insulation) for linesets over 1 inch. Most mfg will require Suction line Diameter with insulation as the following 1.5-2T-2⅝", 2.5-3T-2¾", 3.5 to 4T-2⅞", 5T-4⅛"

Contractor (Documentation Author's /Responsible Designer's Declaration Statement)

I certify the following under penalty of perjury, under the laws of the State of California:

1. The information provided on this Certificate of Compliance is true and correct.
2. I am eligible under Division 3 of the California Business and Professions Code to accept responsibility for the information on this document.
3. That the energy features and performance specifications for the design identified on this Certificate of Compliance conform to the requirements of Title 24, Parts 1 and 6 of the California Code of Regulations (CCR).
4. That the energy features and performance specifications, materials, components, and manufactured devices for the building design or system design identified on this Certificate of Compliance conform to the requirements of Title 24, Part 1 and Part 6 of the CCR.
5. The building design features or system design features identified on this Certificate of Compliance are consistent with the information provided on other applicable compliance documents, worksheets, calculations, plans and specifications submitted to the enforcement agency for approval with this building permit application.

Responsible Designer Name:	Responsible Designer Signature:	Date Signed:	License:
Company :	Address:	City/State/Zip:	Phone:

For assistance or questions regarding the Energy Standards, contact the Energy Hotline at: 1-800-772-3300

STATE OF CALIFORNIA

ALTERATIONS - HVAC

CEC-CF1R-ALT-04-E (Revised 06/13) CALIFORNIA ENERGY COMMISSION

CERTIFICATE OF COMPLIANCE	CF1R-ALT-04-E
Alterations - HVAC CZ 2, and 8-15 (formerly CF-1R-ALT-HVAC)	(Page 1 of 1)

Site Address:				**Enforcement Agency:**	**Date Prepared:**	**Permit#:**
Equipment Type		Equipment Efficiency		New Ducting, *Plenums, Lineset:* Required R-value	Conditioned Floor Area (sq ft)	Thermostat
☐ Packaged System ☐ Split System ☐ Mini Split ☐ Furnace	☐ Evaporator Coil ☐ Condensing Unit ☐ Compressor ☐ Lineset ☐ TXV	_____AFUE _____SEER _____EER	_____COP _____HSPF	☐ R-6 *(CZ 2, 8-13) Ducting* ☐ R-8[1] *(CZ 14-15) Ducting* ☐ R-6 (all CZ's) Plenums ☐ R-5 or R7.5) Lineset[4]	Served by system _____sqft	☐ Setback *(If not already present, must be installed)*

HERS VERIFICATION SUMMARY Listed below are Four HVAC Alteration Options. The installer determines the work to be completed and matches it to one of the options below. All forms to be registered (no hand filled forms allowed). Copy of forms to be left on site for final inspection.

☐ **1. HVAC Changeout/Repair**	**Required Compliance Documents to be left on site for Final**:
All Equipment, Condenser Unit, Evaporator Coil, Compressor, TXV, Lineset, Air Handler/Furnace[2] **(Can include new ducting)**	CF1R-ALT-02-E CF2R: MECH-01, MECH-20-HERS, MECH-(23 or 24)[2]-HERS, MECH-25-HERS[2] CF3R: MECH-20-HERS, MECH-(23 or 24)-HERS[2], MECH-25-HERS[2]

Installer Requirement: Duct leakage (≤ 15%, or ≤ 10% to outside, or seal all accessible leaks), Air Flow ≥ 300 CFM/ton, Refrigerant Charge.
Exempted from duct leakage testing if:
☐ 1. Duct system registered with HERS provider as previously sealed, or ☐ 2. There is less than 40 linear feet of duct in unconditioned space, or
☐ 3. Existing duct systems are constructed, insulated or sealed with asbestos (list manufacture date of building _____)

☐ 2. **New HVAC System**	**Required Compliance Documents to be left on site for Final**:
All new equipment and All New Ducts[3] including Mini Split	CF1R-ALT-02-E CF2R: MECH-01, MECH-20-HERS, MECH-22-HERS, MECH-(23 or 24)-HERS[2], MECH-25-HERS[2] CF3R: MECH-20-HERS, MECH-22-HERS, MECH-(23 or 24)-HERS[2], MECH-25-HERS[2] Mini Splits require CF1R-ALT-02-E, CF2R-MECH-01, and (CF2R-CF3R) MECH-25-HERS

Installer Requirement: Duct leakage ≤ 6%, Fan Efficacy (.58W/CFM), Air Flow ≥ 350 CFM/ton (or alternative), Refrigerant Charge

☐ 3. **All New Ducts with Replacement**	**Required Compliance Documents to be left on site for Final**:
All New Ducts[3] and one or more of the following replaced: Condenser Unit, Evaporator Coil, Compressor, TXV, Lineset, Furnace[2]	CF1R-ALT-02-E CF2R: MECH-01, MECH-20-HERS, MECH-(23 or 24)-HERS, MECH-25-HERS CF3R: MECH-20-HERS, MECH-(23 or 24)-HERS, MECH-25-HERS

Installer Requirement: Duct leakage ≤ 6%, Air Flow ≥ 350 CFM/ton (or alternative), Refrigerant Charge
Exempted from duct leakage testing if: ☐ 1. Existing duct systems are constructed, insulated or sealed with asbestos

☐ 4. **New Ducting over 40 feet**	**Required Compliance Documents to be left on site for Final**:
New ducting but less than All New Ducts[3]	CF1R-ALT-02-E, CF2R: MECH-20-HERS, CF3R: MECH-20-HERS

Installer Required to: Duct leakage (≤ 15% or, ≤ 10% to outside or, or seal all accessible leaks)
☐ EXCEPTION: Existing duct systems constructed, insulated or sealed with asbestos.

[1] All **new** ducting R-8 required when more than 40 ft installed and R-6 when less than 40 ft installed. This includes in walls, between floors etc.
[2] Heating only systems and Air Handler/Furnace changes do not require Air Flow MECH-(23 or 24), or Refrigerant Charge verification MECH-25
[3] All New Ducts is when at least 75 percent of the duct system is new duct material, and up to 25 percent may consist of reused parts from the dwelling unit's existing duct system (e.g., registers, grilles, boots, air handler, coil, plenums, duct material)
[4] R-5 (1" thick insulation) for linesets 1" and less. R-7.5 (1.5" thick insulation) for linesets over 1 inch. Most mfg will require Suction line Diameter with insulation as the following 1.5-2T-2⅝", 2.5-3T-2¾", 3.5 to 4T-2⅞", 5T-4⅛"

Contractor (Documentation Author's /Responsible Designer's Declaration Statement)

I certify the following under penalty of perjury, under the laws of the State of California:

1. The information provided on this Certificate of Compliance is true and correct.
2. I am eligible under Division 3 of the California Business and Professions Code to accept responsibility for the information on this document.
3. That the energy features and performance specifications for the design identified on this Certificate of Compliance conform to the requirements of Title 24, Parts 1 and 6 of the California Code of Regulations (CCR).
4. That the energy features and performance specifications, materials, components, and manufactured devices for the building design or system design identified on this Certificate of Compliance conform to the requirements of Title 24, Part 1 and Part 6 of the CCR.
5. The building design features or system design features identified on this Certificate of Compliance are consistent with the information provided on other applicable compliance documents, worksheets, calculations, plans and specifications submitted to the enforcement agency for approval with this building permit application.

Responsible Designer Name:	Responsible Designer Signature:	Date Signed:	License:
Company :	Address:	City/State/Zip:	Phone:

For assistance or questions regarding the Energy Standards, contact the Energy Hotline at: 1-800-772-3300

EZ FRAME WORKSHEET

CERTIFICATE OF COMPLIANCE	CF1R-ENV-01-E
EZ Frame Worksheet	(Page 1 of 2)
Project Name:	Date Prepared:

A. Assembly Information

01	Frame Type	
02	Surface Type	
03	Inside layer #3	
04	Inside layer #2	
05	Inside layer #1	
06	Framing Width	
07	Framing Depth	
08	Cavity Insulation	
09	Frame Spacing	
10	Framing Thickness or Gauge	
11	Framing Knockout	
12	Outside layer #1	
13	Outside layer #2	
14	Outside layer #3	
15	Outside layer #4	
16	Outside layer #5	

B. Results

01	Framing Assembly U-factor	
02	Framing Assembly R-value	

For information and data collection only. Not valid until registered with a HERS provider

DOCUMENTATION AUTHOR'S DECLARATION STATEMENT	
1. I certify that this Certificate of Compliance documentation is accurate and complete.	
Documentation Author Name:	Documentation Author Signature:
Company:	Signature Date:
Address:	CEA/ HERS Certification Identification (if applicable):
City/State/Zip:	Phone:

RESPONSIBLE PERSON'S DECLARATION STATEMENT

I certify the following under penalty of perjury, under the laws of the State of California:

1. The information provided on this Certificate of Compliance is true and correct.
2. I am eligible under Division 3 of the Business and Professions Code to accept responsibility for the building design or system design identified on this Certificate of Compliance (responsible designer).
3. That the energy features and performance specifications, materials, components, and manufactured devices for the building design or system design identified on this Certificate of Compliance conform to the requirements of Title 24, Part 1 and Part 6 of the California Code of Regulations.
4. The building design features or system design features identified on this Certificate of Compliance are consistent with the information provided on other applicable compliance documents, worksheets, calculations, plans and specifications submitted to the enforcement agency for approval with this building permit application.
5. I will ensure that a registered copy of this Certificate of Compliance shall be made available with the building permit(s) issued for the building, and made available to the enforcement agency for all applicable inspections. I understand that a registered copy of this Certificate of Compliance is required to be included with the documentation the builder provides to the building owner at occupancy.

Responsible Designer Name:	Responsible Designer Signature:
Company :	Date Signed:
Address:	License:
City/State/Zip:	Phone:

For information and data collection only. Not valid until registered with a HERS provider

A. Assembly Information

1. Frame Type: This refers to the type of construction material being used for structural purposes.
2. Surface Type: This refers to the type demising partition that separates the conditioned and unconditioned spaces (Wall, Floor, Roof or Ceiling).
3. Inside Layer #3: The third layer is adjacent to the second layer and is the layer visible from inside the building. The material of the must be selected from the materials library.
4. Inside Layer #2: The second layer is adjacent to the first layer and the material must be selected from the materials library.
5. Inside Layer #1: The first layer is adjacent to the framing and the material must be selected from the materials library.
6. Framing Width: For wood framing, enter the width of the framing member (in inches).
7. Framing Depth: For wood framing, enter the depth of the framing member (in inches).
8. Cavity Insulation: This refers to the R-value of the cavity insulation.
9. Frame Spacing: This refers to the center to center distance between the framing members.
10. Framing Thickness or Gauge: For metal framing, enter the metal thickness (in inches) or the gauge of the metal.
11. Framing Knockout: This refers to the percentage of the length of the metal framing member that does not conduct heat because of the knock-out (typically 15%)
12. Outside Layer #1: The first outside layer is adjacent to the framing and the material must be selected from the materials library.
13. Outside Layer #2: The second outside layer is adjacent to the first and the material must be selected from the materials library.
14. Outside Layer #3: The third outside layer is adjacent to the second and the material must be selected from the materials library.
15. Outside Layer #4: The fourth outside layer is adjacent to the third and the material must be selected from the materials library.
16. Outside Layer #5: The fifth outside layer is the layer that can be seen from outside the space and the material must be selected from the materials library.

B. Results

1. Framing Assembly U-factor: This is the total assembly U-factor, taking into account all information that was inputted (Btu/h-ft^{2}F).
2. Framing Assembly R-value: This is the total assembly R-value, based on the assembly U-factor (h-ft^2-F/Btu).

For information and data collection only. Not valid until registered with a HERS provider

A. Assembly Information

01	Frame Type	<<Select from the drop down list>>
02	Surface Type	<<Select from the drop down list>>
03	Inside layer #3	<<Select from materials library>>
04	Inside layer #2	<<Select from materials library>>
05	Inside layer #1	<<Select from materials library>>
06	Framing Width	<<Input the width of the framing member itself>>
07	Framing Depth	<<Input the depth of the framing member itself>>
08	Cavity Insulation	<<Input the Insulation's Rated R-value>>
09	Frame Spacing	<<Select from drop down list>>
10	Framing Thickness or Gauge	<<>>
11	Framing Knockout	<<>>
12	Outside layer #1	<<Select from materials library>>
13	Outside layer #2	<<Select from materials library>>
14	Outside layer #3	<<Select from materials library>>
15	Outside layer #4	<<Select from materials library>>
16	Outside layer #5	<<Select from materials library>>

B. Results

01	Framing Assembly U-factor	<<calculated value, display output from ezframe software>>
02	Framing Assembly R-value	<<calculated value, display output from ezframe software>>

For information and data collection only. Not valid until registered with a HERS provider.

AREA WEIGHTED AVERAGE CALCULATION WORKSHEET

CERTIFICATE OF COMPLIANCE	CF1R-ENV-02-E
Area Weighted Average Calculation Worksheet	(Page 1 of 2)
Project Name:	Date Prepared:

A. Area-Weighted Average Calculation

1	2		3		4		5		6		7		8		9
Item/ Tag No.	Type 1 Value[1]		Type 1 Area[2]		Type 2 Value[1]		Type 2 Area[2]		Type 3 Value[1]		Type 3 Area[2]		Total Area		Area Weighted Average Value[3]
	[(_____)	x	(_____)	+	(_____)	x	(_____)	+	(_____)	x	(_____)]	÷		=	
	[(_____)	x	(_____)	+	(_____)	x	(_____)	+	(_____)	x	(_____)]	÷		=	
	[(_____)	x	(_____)	+	(_____)	x	(_____)	+	(_____)	x	(_____)]	÷		=	
	[(_____)	x	(_____)	+	(_____)	x	(_____)	+	(_____)	x	(_____)]	÷		=	
	[(_____)	x	(_____)	+	(_____)	x	(_____)	+	(_____)	x	(_____)]	÷		=	
	[(_____)	x	(_____)	+	(_____)	x	(_____)	+	(_____)	x	(_____)]	÷		=	

1. *"Value" can be replaced throughout the formula by "U-factor", "Solar Heat Gain Coefficient," or any other value that varies throughout a residence and is appropriate to weight average. Mixture of different units not allowed.*
2. *"Area" can be replaced throughout the formula by "Length" or any other unit of measure used for the value being averaged. Mixture of different units not allowed.*
3. *Enter the above Weighted Average Value on the CF-1R form and attach this sheet.*

DOCUMENTATION AUTHOR'S DECLARATION STATEMENT

1. I certify that this Certificate of Compliance documentation is accurate and complete.

Documentation Author Name:	Documentation Author Signature:
Company:	Signature Date:
Address:	CEA/ HERS Certification Identification (if applicable):
City/State/Zip:	Phone:

RESPONSIBLE PERSON'S DECLARATION STATEMENT

I certify the following under penalty of perjury, under the laws of the State of California:

1. The information provided on this Certificate of Compliance is true and correct.
2. I am eligible under Division 3 of the Business and Professions Code to accept responsibility for the building design or system design identified on this Certificate of Compliance (responsible designer).
3. That the energy features and performance specifications, materials, components, and manufactured devices for the building design or system design identified on this Certificate of Compliance conform to the requirements of Title 24, Part 1 and Part 6 of the California Code of Regulations.
4. The building design features or system design features identified on this Certificate of Compliance are consistent with the information provided on other applicable compliance documents, worksheets, calculations, plans and specifications submitted to the enforcement agency for approval with this building permit application.
5. I will ensure that a registered copy of this Certificate of Compliance shall be made available with the building permit(s) issued for the building, and made available to the enforcement agency for all applicable inspections. I understand that a registered copy of this Certificate of Compliance is required to be included with the documentation the builder provides to the building owner at occupancy.

Responsible Designer Name:	Responsible Designer Signature:
Company :	Date Signed:
Address:	License:
City/State/Zip:	Phone:

For information and data collection only. Not valid until registered with a HERS provider

CERTIFICATE OF COMPLIANCE	CF1R-ENV-02-E
Area Weighted Average Calculation Worksheet	(Page 2 of 2)
Project Name:	Date Prepared:

For information and data collection only. Not valid until registered with a HERS provider

This worksheet is used to calculate the area-weighted average values for building envelope features such as walls, roofs, floors, mass, and fenestration/glazing U-factors or Solar Heat Gain Coefficient (SHGC) values for prescriptive compliance. R-values are not used for area-weighing; only U-factors or SHGC values are allowed.

Weighted averaging is done when there is more than one level of insulation or more than one type of window and one or more does not meet prescriptive compliance requirements. Each fenestration type (e.g., vertical windows, skylights, dynamic glazing, and window films) are treated independently and cannot be combined. Submit the ENV-02 with the energy compliance forms.

If exterior shading devices are used to meet an SHGC requirement, first complete a CF1R-ENV-03 (Solar Heat Gain Coefficient (SHGC) Worksheet). If the SHGC exceeds 0.25 then the weighted-average of other like windows should be used to determine overall compliance with prescriptive SHGC requirements.

General Information:
Project Name: Identifying information, such as owner's name.
Date: Date of document preparation.

A. Area Weighted Average Calculation

1. Tag/ID: same data given on NRCC CF1R's; provides an identification Tag or Identification name that uniquely identifies the window system. If there is a wall/floors/mass/window plan or schedule for the system, the Tag/ID name may be given on the plans.
2. Column 2: Type 1 Value: U-factor or SHGC value of the first component from the manufacturers data or specification sheet
3. Column 3: Type 1 Area: Area value (wall surface area or window rough opening); plus

4. Column 4 Type 2 Value: U-factor or SHGC value of the second component from the manufacturers data or specification sheet
5. Column 5: Type 2 Area: Area value (wall surface area or window rough opening); plus

6. Column 6: Type 3 Value: U-factor or SHGC value of the third component from the manufacturers data or specification sheet
7. Column 7: Type 3 Area: Area value (wall surface area or window rough opening); Sum all Types and divided by [Note: if more than three component s then use the next line and use the total area of both lines and divide into the summation of the other values.]
8. Column 8: Total Area: Is the sum of all the area of the walls or windows
9. Column 9: Area Weighted Average Value: The new calculated U-factor or SHGC value is entered on the respective prescriptive CF1R-NCB-01-E, CF1R-ALT-01series and CF1R-ADD-01.

For information and data collection only. Not valid until registered with a HERS provider

For information and data collection only. Not valid until registered with a HERS provider

SOLAR HEAT GAIN COEFFICIENT (SHGC) WORKSHEET

CERTIFICATE OF COMPLIANCE	CF1R-ENV-03-E
Solar Heat Gain Coefficient (SHGC) Worksheet	(Page 1 of 1)
Project Name:	Date Prepared:

A. Product Information		
01	Window Item or Tag Name:	
02	Frame Type	
03	Product Type	
04	Glazing Coating	
05	Glazing Layer	
06	Fenestration Mounted	

B. Solar Heat Gain Coefficient Calculation Inputs		
01	Fenestration SHGC value from NFRC Label Certificate; ($SHGC_{fen}$)	
02	Fenestration SHGC value from Table 110.6-B; $SHGC_{fen}$	
03	Exterior Shade Device SHGC Type; $SHGC_{Exterior\ Shade}$	
04	The *larger* of Item (1, or 2, or 3) above; $SHGC_{max\ =}$	
05	The *smaller* of Item (1, or 2, or 3) above; $SHGC_{min\ =}$	
06	The total combined adjusted SHGC with exterior shading device; ($SHGC_{total}$)	

DOCUMENTATION AUTHOR'S DECLARATION STATEMENT

1. I certify that this Certificate of Compliance documentation is accurate and complete.

Documentation Author Name:	Documentation Author Signature:
Company:	Signature Date:
Address:	CEA/ HERS Certification Identification (if applicable):
City/State/Zip:	Phone:

RESPONSIBLE PERSON'S DECLARATION STATEMENT

I certify the following under penalty of perjury, under the laws of the State of California:

1. The information provided on this Certificate of Compliance is true and correct.
2. I am eligible under Division 3 of the Business and Professions Code to accept responsibility for the building design or system design identified on this Certificate of Compliance (responsible designer).
3. That the energy features and performance specifications, materials, components, and manufactured devices for the building design or system design identified on this Certificate of Compliance conform to the requirements of Title 24, Part 1 and Part 6 of the California Code of Regulations.
4. The building design features or system design features identified on this Certificate of Compliance are consistent with the information provided on other applicable compliance documents, worksheets, calculations, plans and specifications submitted to the enforcement agency for approval with this building permit application.
5. I will ensure that a registered copy of this Certificate of Compliance shall be made available with the building permit(s) issued for the building, and made available to the enforcement agency for all applicable inspections. I understand that a registered copy of this Certificate of Compliance is required to be included with the documentation the builder provides to the building owner at occupancy.

Responsible Designer Name:	Responsible Designer Signature:
Company :	Date Signed:
Address:	License:
City/State/Zip:	Phone:

For information and data collection only. Not valid until registered with a HERS provider

WKS-03 Instructions

This worksheet is to be used to determine the effective Solar Heat Gain Coefficients (SHGC) value of fenestration in combination with an exterior shading device. This worksheet is to be completed for each different fenestration and exterior shading combination. Total $SHGC_{total}$ values are determined by choosing the larger of B1, B2 or B3 for SHG_{max} and the smaller of B1, B2 or B3 for $SHGC_{min}$ and calculated in the total $SHGC_{total}$ equation in Item B6. The following rules apply when selecting exterior shading devices;

1. If using this worksheet, a standard bug screen must be assumed for all vertical fenestration unless replaced by another exterior shading device as listed in B3, only one exterior shade may be applied to a vertical window.
2. The listed SHGC for bug screen is an area-weighted value that assumes that the screens are only on operable windows. If no exterior shade is selected then assume to have a SHGC of 0.76 for standard bug screen for all windows.
3. This requirement does not apply to skylights where exterior shading SHGC is assumed to be 1.00.
4. When exterior shading devices are applied and do not meet the prescriptive efficiencies for windows or skylights then these windows and skylight must be area-weighted using the CF1R-WKS-02-E. Different shading conditions may also be modeled explicitly in the computer performance method.

The target value for Total $SHGC_{total}$ is 0.25 for Climate Zones 2, 4 and 6-16. However, if not able to meet the target value it may be required to calculate the area weighted average (CF1R-ENV-02-E form) with other more efficient like windows and skylights.
The resultant Total $SHGC_{total}$ value shall be documented prescriptively on the RCC-CF1R-NCB-01-E, RCC-CF1R-ADD-01-E and RCC-CF1R-ALT-01-E in the Fenestration section, attach a completed RCC-CF1R-ENV-03-E with submittal. On Performance Approach the program will generate its own CF1R and will include the Total $SHGC_{total}$ values.

A. GENERAL INFORMATION

1. Window Tag or ID Name; same data given on NCC CF1R's; provides an identification name or tag name that uniquely identifies the window system. If there is a window plan or schedule for the system, the tag name may be given on the plans.
2. Frame Type; Choose either: Metal or Non-metal or Metal w/Thermal Break
3. Product Type; Choose either Operable or fixed.
4. Glazing Coating; Clear (not visibly tinted) or Tinted (visibly tinted):
5. Glazing Layer; Choose either Single/Double Pane/Triple/Block Glass.
6. Fenestration Mounted; Choose either Vertical Glazing or Skylight

B. SOLAR HEAT GAIN COEFFICIENT CALCULATION

1. Fenestration SHGC value from NFRC Label Certificate: Enter in **B.1;** the SHGC value from the NFRC Label Certificate; or the Energy Commission's Default Label
2. Fenestration SHGC value from Table 110.6-B: Enter in **B.2;** If there is no labels available then choose the appropriate value from Table 110.6-B from the Standards. The value is based on the information provided in **A. General Information**.
3. Exterior Shade Device SHGC Type: Enter in **B.3;** select a value from Table S-1 below. If no exterior shading device is selected then default to the bug screen value of 0.76.
4. Enter in B.4; the larger of **B.**1, or **B.2**, or **B.3.**
5. Enter in B.5; select the smaller value from **B.**1, or **B.2**, or **B.3.**
6. Enter in B.6; the calculated total combined adjusted $SHGC_{total}$. Use the Target Equation to calculate the total $SHGC_{total}$.

For information and data collection only. Not valid until registered with a HERS provider

REFERENCE TABLES:

Target Equation

$SHGC_{total}$ = [(_____ $SHGC_{max}$ × 0.2875) + 0.75] × _____$SHGC_{min}$

TABLE S-1

Exterior Shading Device		**$SHGC_{Exterior\ Shade}$**
1	Standard Bug Screens	0.76
2	Exterior Sunscreens with Weave 53 x 16/inch	0.30
3	Louvered Sunscreens w/Louvers as Wide as Openings	0.27
4	Low Sun Angle (LSA) Louvered Sunscreens	0.13
5	Vertical Roller or Shades or Retractable or Drop Arm/Marquisolette or Operable Awnings	0.13
6	Roll Down Blinds or Slats	0.13
7	None (for skylights only)	1.00

For information and data collection only. Not valid until registered with a HERS provider

A. Product Information		
1	Window Item or Tag Name:	<<Name pulled from CF-1R>>
2	Frame Type	<<user pick from list: Metal (M) or Non-metal (NM) or Metal w/Thermal Break (MTB)>>
3	Product Type	<<user pick from list: Operable or Fixed>>
4	Glazing Coating	<<user pick from list: Clear (not visibly tinted) or Tinted (visibly tinted) >>
5	Glazing Layer	<<user pick from list: Single; or Double Pane; or Triple; or Block Glass>>
6	Fenestration Mounted	<<user pick from list: Vertical Glazing or Skylight>>

B. Solar Heat Gain Coefficient Calculation Inputs		
1	Fenestration SHGC value from NFRC Label Certificate; ($SHGC_{fen)}$	<< user input, numeric; X.XX>>
2	Fenestration SHGC value from Table 110.6-B; $SHGC_{fen}$	<< numeric; X.XX either from user input (user refers to the reference tables 110.6-B for SHGC and S-1 for Exterior Shading Device to determine the value for input) and utilizes values in A.01, A.02, A.03, A.04, A.05, and A.06 to determine the value >>
3	Exterior Shade Device SHGC Type; $SHGC_{Exterior\ Shade}$ Not sure how to show this table in here. What is the stds procedure for referencing	<< user pick from list: Standard Bug Screens SHGC=.76; or Exterior Sunscreens with Weave 53 x 16/inch, SHGC=0.30; or Louvered Sunscreens w/Louvers as Wide as Openings, SHGC=0.27, or Low Sun Angle (LSA) Louvered Sunscreens, SHGC=0.13, or Vertical Roller or Shades or Retractable/Drop Arm/Marquisolette and Operable Awnings[2], SHGC=0.13, or Roll Down Blinds or Slats, SHGC=0.13, or None (for skylights only), SHGC= 1.00>>
4	The *larger* of Item (1, or 2, or 3) above; $SHGC_{max\ =}$	<<user choose the Maximum value between B1 or B2 or B3>>
5	The *smaller* of Item (1, or 2, or 3) above; $SHGC_{min\ =}$	<<user choose the Minimum value between B1 or B2 or B3>>
6	The total combined adjusted SHGC with exterior shading device; ($SHGC_{total}$)	<<calculated field: $SHGC_{total}$= [(B4*0.2875+075)*B5]>>

For information and data collection only. Not valid until registered with a HERS provider

REFERENCE TABLES:

Target Equation

$SHGC_{total}$ = [(_____ $SHGC_{max}$ × 0.2875) + 0.75] × _____$SHGC_{min}$

TABLE 110.6-B DEFAULT SOLAR HEAT GAIN COEFFICIENT (SHGC)

FRAME TYPE	PRODUCT	GLAZING	FENESTRATION PRODUCT SHGC		
			Single Pane SHGC	Double Pane SHGC	Glass Block SHGC
Metal	Operable	Clear	0.80	0.70	0.70
	Fixed	Clear	0.83	0.73	0.73
	Operable	Tinted	0.67	0.59	N.A.
	Fixed	Tinted	0.68	0.60	N.A.
Metal, Thermal Break	Operable	Clear	N.A.	0.63	N.A.
	Fixed	Clear	N.A.	0.69	N.A.
	Operable	Tinted	N.A.	0.53	N.A.
	Fixed	Tinted	N.A.	0.57	N.A.
Nonmetal	Operable	Clear	0.74	0.65	0.70
	Fixed	Clear	0.76	0.67	0.67
	Operable	Tinted	0.60	0.53	N.A.
	Fixed	Tinted	0.63	0.55	N.A.

TABLE S-1

Exterior Shading Device		$SHGC_{Exterior\ Shade}$
1	Standard Bug Screens	0.76
2	Exterior Sunscreens with Weave 53 x 16/inch	0.30
3	Louvered Sunscreens w/Louvers as Wide as Openings	0.27
4	Low Sun Angle (LSA) Louvered Sunscreens	0.13
5	Vertical Roller or Shades or Retractable or Drop Arm/Marquisolette or Operable Awnings	0.13
6	Roll Down Blinds or Slats	0.13
7	None (for skylights only)	1.00

For information and data collection only. Not valid until registered with a HERS provider

SOLAR REFLECTANCE INDEX CALCULATION WORKSHEET

CERTIFICATE OF COMPLIANCE	CF1R-ENV-04-E
Solar Reflectance Index Calculation Worksheet	(Page 1 of 2)
Project Name:	Date Prepared:

A. Product Information

1	CRRC Product ID Number	
2	Manufacturer	
3	Brand	
4	Model	
5	Product Type	
6	Roof Slope	

B. SRI Calculations

1	Aged Reflectance Listed with CRRC	
2	CRRC Listed Aged Solar Reflectance	
3	Initial Solar Reflectance	
4	Calculated Aged Solar Reflectance	
5	Thermal Emittance	

C. Results

1	Solar Reflective Index	

DOCUMENTATION AUTHOR'S DECLARATION STATEMENT

1. I certify that this Certificate of Compliance documentation is accurate and complete.

Documentation Author Name:	Documentation Author Signature:
Company:	Signature Date:
Address:	CEA/ HERS Certification Identification (if applicable):
City/State/Zip:	Phone:

RESPONSIBLE PERSON'S DECLARATION STATEMENT

I certify the following under penalty of perjury, under the laws of the State of California:

1. The information provided on this Certificate of Compliance is true and correct.
2. I am eligible under Division 3 of the Business and Professions Code to accept responsibility for the building design or system design identified on this Certificate of Compliance (responsible designer).
3. That the energy features and performance specifications, materials, components, and manufactured devices for the building design or system design identified on this Certificate of Compliance conform to the requirements of Title 24, Part 1 and Part 6 of the California Code of Regulations.
4. The building design features or system design features identified on this Certificate of Compliance are consistent with the information provided on other applicable compliance documents, worksheets, calculations, plans and specifications submitted to the enforcement agency for approval with this building permit application.
5. I will ensure that a registered copy of this Certificate of Compliance shall be made available with the building permit(s) issued for the building, and made available to the enforcement agency for all applicable inspections. I understand that a registered copy of this Certificate of Compliance is required to be included with the documentation the builder provides to the building owner at occupancy.

Responsible Designer Name:	Responsible Designer Signature:
Company :	Date Signed:
Address:	License:
City/State/Zip:	Phone:

For information and data collection only. Not valid until registered with a HERS provider

CERTIFICATE OF COMPLIANCE	CF1R-ENV-04-E
Solar Reflectance Index Calculation Worksheet	(Page 2 of 2)
Project Name:	Date Prepared:

For information and data collection only. Not valid until registered with a HERS provider

CF1R-WKS-04-E Instructions

A. Product Information:

1. CRRC Product ID Number, Manufacturer, Brand, Model and Product Type should be based on product information from the Cool Roof Rating Council's website. The product directory is located at http://www.coolroofs.org/products/search.php and may be browsed either by viewing all products or by using the search function to find a specific product. Keep in mind that inclusion in the directory does not guarantee that a product will meet the energy requirements.
2. Roof Slope: Designate the roof slope as either "less than or equal to 2:12"(≤2:12) or "greater than 2:12"(>2:12). A ratio of 2:12 is approximately 9.5 degree slope. The SRI requirement is based partly on the slope of the roof.

B. SRI Calculations:

1. Aged Reflectance Listed with CRRC: Indicate whether or not your product's 3-year aged solar reflectance is listed on the CRRC website by selecting either "yes" or "no" from the drop-down list. Depending on your selection, the boxes that you will not need should become blacked out.
2. CRRC Listed Aged Solar Reflectance: If you selected "yes" to box 1, input the CRRC listed 3-year aged solar reflectance.
3. Initial Solar Reflectance: If you selected "no" to box 1, input the CRRC listed initial solar reflectance.
4. Calculated Aged Solar Reflectance: No input required. The calculator will calculate the aged reflectance using the initial reflectance once you hit enter or click outside the box. Note that the solar reflectance value will be a decimal between 0 and 1.
5. Thermal Emittance: Input the value for thermal emittance obtained from the CRRC. This value can be either the initial thermal emittance or the 3-year aged value. Note that it also must be a decimal between 0 and 1.

C. Results:

1. Solar Reflectance Index: If you have entered values for both solar reflectance and thermal emittance, once you press enter or click outside the box, the calculator will calculate the final SRI value. It may take a few moments to obtain a value for the SRI depending on the values you inputted for reflectance and emittance.

For information and data collection only. Not valid until registered with a HERS provider

A. Product Information

1	CRRC Product ID Number	<<text (data from CF-1R>>
2	Manufacturer	<<user input: text>>
3	Brand	<<user input: text>>
4	Model	<<user input: text>>
5	Product Type	<<text (data from CF-1R>>
6	Roof Slope	<<text (data from CF-1R>>
7	Product Weight	<<user input: numeric>>

B. SRI Calculation

1	Aged Reflectance Listed with CRRC	<<user pick from list: Yes; No>>
2	CRRC Listed Aged Solar Reflectance	<<user input: numeric>>
3	Initial Solar Reflectance	<<user input: numeric>>
4	Calculated Aged Solar Reflectance	<<xxx.x (null entry, this value is calculated)>>
5	Thermal Emittance	<<user input: numeric>>

C. Results

1	Solar Reflective Index	<<xxx.x (null entry, this value is calculated)>>

For information and data collection only. Not valid until registered with a HERS provider

CERTIFICATE OF COMPLIANCE	CF1R-NCB-01-E
Newly Constructed Buildings	(Page 1 of 6)
Project Name:	Date Prepared:

A. GENERAL INFORMATION

01	**Project Name:**		02	**Date:**	
03	**Project Location:**		04	**Compliance Method:**	
05	**CA City:**		06	**Building Front Orientation (deg or cardinal):**	
07	**Zip Code:**		08	**Number of Dwelling Units:**	
09	**Climate Zone:**		10	**Fuel Type:**	
11	**Building Type:**	☐ Single Family ☐ Multi Family	12	**Total Conditioned Floor Area:**	
13	**Project Type:**	☐ Newly Constructed Building ☐ New Addition greater than 1,000 ft^2	14	**Slab Area:**	

B. OPAQUE SURFACE DETAILS – Framed (Section 150.1(c)1)

01	02	03	04	05	06		07	08	09	10	11
					Proposed					**Required**	
								Appendix JA4 Reference			
Tag/ID	Assembly Type	Frame Type	Frame Depth (inches)	Frame Spacing (inches)	Cavity R-value	Continuous Insulation R-value	U-Factor	Table	Cell	U-Factor from Package A	Comments

C. OPAQUE SURFACE DETAILS – Non-framed (Section 150.1(c)1)

01	02	03	04	05	06	07	08	09	10	11
				Proposed					**Required**	
							Appendix JA4 Reference			
Tag/ID	Assembly Type	Assembly Materials	Thickness (inches)	Core Insulation R-value	Continuous Insulation R-value	U-Factor	Table	Cell	U-Factor from Package A	Comments

For information and data collection only. Not valid until registered with a HERS provider

CERTIFICATE OF COMPLIANCE	CF1R-NCB-01-E
Newly Constructed Buildings	(Page 2 of 6)
Project Name:	Date Prepared:

D. OPAQUE SURFACE DETAILS – Mass Walls (Section 150.1(c)1)

01	02	03	04	05	06		07		08	09	10		11	
					Proposed						**Required**			
					Interior Insulation		Exterior Insulation		Appendix JA4 Reference		Interior Insulation		Exterior Insulation	
Tag/ID	Walls Above Grade	Mass Type	Mass Thickness (inches)	Furring Strip Thickness (inches)	R-value	U-factor	R-value	U-factor	Table	Cell	R-value	U-factor	R-value	U-factor

E. SLAB INSULATION (Table 150.1-A)

01	02		03		04
	Proposed		**Required**		
Floor Type	R-value	U-factor	Insulation R-value	Insulation U-factor	Comments

- **Heated slab floors require mandatory slab insulation (see Table 110.8-A).**

F. RADIANT BARRIER (Section 150.1(c)2

01	02
Radiant Barrier installed below the roof deck and on all gable end walls	Comment

A radiant barrier is required (for Climate Zones 2-15)

- *To meet the prescriptive requirement, a minimum free ventilation area of not less than one square foot of vent area for each 300 ft^2 of attic floor area with 30 percent upper vent.*
- *A minimum air space between the top surface of the radiant barrier and roof decking of not less than 1.5 inches at the center of the truss/rafter span.*
- *Radiant Barrier shall be installed to cover all gable end walls and other vertical surfaces in the attic.*

For information and data collection only. Not valid until registered with a HERS provider

CERTIFICATE OF COMPLIANCE	CF1R-NCB-01-E
Newly Constructed Buildings	(Page 3 of 6)
Project Name:	Date Prepared:

G. ROOFING PRODUCTS (COOL ROOF) (Section 150.1(c)11)

01	02	03	04	05	06	07	08	09	10	11
				Proposed			Required			
Mass Roof 25 lb ft^2 or greater	Roof Pitch	CRRC Product ID Number	Product Type	Aged Solar Reflectance	Thermal Emittance	SRI	Aged Solar Reflectance	Thermal Emittance	SRI	Comments

NOTES:

- Any roof area covered by building integrated photovoltaic panels and solar thermal panels are exempt from the above Cool Roof requirements.
- Liquid field applied coatings must comply with installation criteria from section 110.8(i)4.

H. FENESTRATION/GLAZING AREAS ALLOWED

01	02	03	04	05	06
Tag/ID	Orientation	Maximum Allowed	U-factor	SHGC	Comments

I. FENESTRATION PROPOSED AREAS AND EFFICIENCIES

01	02	03	04	05	06	07	08	09	10	11	12
Tag/ID	Fenestration Type	Surface Area	Orientation N, S, W, E or Roof	# of Panes	Total Proposed Area	U-factor	Source	SHGC	Source	Exterior Shading Device	Comments
a.	Total Proposed Fenestration Area										
b.	Maximum Allowed Fenestration Area										
c.	Row a. ≤ Row b.)										
d.	If exterior shading devices are used, what is the new calculated SHGC value from CF1R-ENV-03?										

For information and data collection only. Not valid until registered with a HERS provider

CERTIFICATE OF COMPLIANCE	CF1R-NCB-01-E
Newly Constructed Buildings	(Page 4 of 6)
Project Name:	Date Prepared:

J. SPACE CONDITIONING (SC) SYSTEMS – HEATING/COOLING/DUCTS

01	02	03	04	05	06	07	08	09
Heating Equipment Type	Heating Efficiency	Cooling Equipment Type	Cooling Efficiency	Distribution System Type	Duct Location	Duct R-value	Thermostat Type	Comments

- Central gas furnaces have a minimum efficiency of 78% AFUE, heat pumps 7.7 HSPF. Any gas heating appliance sold in California will meet the minimum appliance efficiency standard and is allowed. Heat pumps and mini-split heat pumps are the only type of electric heating system allowed.
- Central cooling systems and heat pumps have a minimum efficiency of 13 SEER. Any cooling appliance sold in California will meet the minimum appliance efficiency standard and is allowed.
- The prescriptive requirements preclude the use of bypass ducts in association with zonally controlled systems. A HERS Rater shall verify that zonally controlled systems have no bypass ducts.

K. VENTILATION COOLING in Climate Zones 8-14 Section 150.1(c)12

01	02
Required 2 CFM per ft^2 of Conditioned Floor Area	Minimum Attic Vent Free Area (column 1 / 375 CFM)

- Homeowners shall be provided a one-page fact sheet on the efficient operation of a whole house fan.

L. WATER HEATING (Section 150.1(c)8)

List water heaters and boilers for both domestic hot water (DHW) heaters and hydronic space heating.

01	02	03	0	05	06	07	08	09	10	11
Water Heater Type	Water Heating System Type	Fuel Type	Central Domestic Hot Water Heating Distribution System	Dwelling Unit Distribution Type	Number of Water Heaters In System	Water Heater Volume (gal)	Energy Factor, AFUE or Thermal Efficiency	Rated Input (Btuh or kW)	Standby Loss (% or Btu)	Back-Up Solar Savings Fraction

For information and data collection only. Not valid until registered with a HERS Provider

M. HERS VERIFICATION SUMMARY The enforcement agency shall pay special attention to the HERS Measures specified in this checklist below. A registered Certificate of Verification for all the measures specified shall be submitted to the building inspector before final inspection.

Ducts

- Duct leakage testing required (Residential Appendix RA3.1)
- Heating and cooling systems are ductless, no HERS verification required
- System is zonally controlled. No bypass ducts are allowed, as confirmed by HERS verification

Refrigerant Charge

- Refrigerant Charge Testing is required (Residential Appendix RA3.2) in climate zones 2 and 8-15
- No cooling system installed

Central System Air Handlers

- Airflow and Fan Efficacy (Residential Appendix RA3.3) or System Design
- No cooling system installed
- Non-ducted cooling system

For information and data collection only. Not valid until registered with a HERS provider

CERTIFICATE OF COMPLIANCE	CF1R-NCB-01-E
Newly Constructed Buildings	(Page 6 of 6)
Project Name:	Date Prepared:

DOCUMENTATION AUTHOR'S DECLARATION STATEMENT	
1. I certify that this Certificate of Compliance documentation is accurate and complete.	
Documentation Author Name:	Documentation Author Signature:
Company:	Signature Date:
Address:	CEA/ HERS Certification Identification (if applicable):
City/State/Zip:	Phone:

RESPONSIBLE PERSON'S DECLARATION STATEMENT

I certify the following under penalty of perjury, under the laws of the State of California:

1. The information provided on this Certificate of Compliance is true and correct.
2. I am eligible under Division 3 of the Business and Professions Code to accept responsibility for the building design or system design identified on this Certificate of Compliance (responsible designer).
3. That the energy features and performance specifications, materials, components, and manufactured devices for the building design or system design identified on this Certificate of Compliance conform to the requirements of Title 24, Part 1 and Part 6 of the California Code of Regulations.
4. The building design features or system design features identified on this Certificate of Compliance are consistent with the information provided on other applicable compliance documents, worksheets, calculations, plans and specifications submitted to the enforcement agency for approval with this building permit application.
5. I will ensure that a registered copy of this Certificate of Compliance shall be made available with the building permit(s) issued for the building, and made available to the enforcement agency for all applicable inspections. I understand that a registered copy of this Certificate of Compliance is required to be included with the documentation the builder provides to the building owner at occupancy.

Responsible Designer Name:	Responsible Designer Signature:
Company :	Date Signed:
Address:	License:
City/State/Zip:	Phone:

For information and data collection only. Not valid until registered with a HERS provider

For assistance or questions regarding the Energy Standards, contact the Energy Hotline at: 1-800-772-3300.

A	GENERAL INFORMATION				
01	**Project Name:**	Pleasant Hills at Lincoln Shores - Plan01			
02	**Calculation Description**	Base+ RCV, 15SEER, LLAH, 0.42FanEff, 400cfm/t, .22shgc			
03	**Multifamily/Subdivision Name**	Pleasant Hills at Lincoln Shores	04	**Input File Name:**	Phls-p01-023.ext
05	**Project Location:**	Plan 01	06	**Rule Set Filename:**	CA Res 2013.bin
07	**CA City :**	A City Name	08	**Compliance Method:**	2013 Standards v1.0
09	**Zip code**	99999	10	**Special Programs:**	NSHP
11	**Climate Zone:**	12	12	**Bldg Front Orientation (deg or cardinal):**	0 (N)
13	**Building Type:**	Multifamily	14	**Number of Dwelling Units:**	4
15	**Construction Type:**	Newly Constructed Building	16	**Number of Zones:**	7
17	**Total Cond. Floor Area (FT2):**	7,000	18	**Number of Stories:**	2
19	**Slab Area (FT2):**	4,000	20	**Average Ceiling Height (FT):**	8 Ft
21	**Addition Cond. Floor Area:**	0	22	**Fuel Type:**	Natural Gas
23	**Addition Slab Area (FT2)**	0	24	**Glazing Percentage (%):**	16.5

B	Compliance Results
01	**Building Complies with Computer Performance**
02	**Special Features are Required**
03	**HERS Verification is Required**

ENERGY USE SUMMARY

4	5	6	7	8
Energy Use ($kTDV/ft^2$-yr)	**Standard Design**	**Proposed Design**	**Compliance Margin**	**Percent Improvement**
Space Heating	24.22	19.34	4.88	20.1%
Space Cooling	15.22	6.14	9.08	59.7%
IAQ Ventilation	0.88	0.88	0.00	0.0%
Water Heating	21.19	20.22	0.97	4.6%
Photovoltaic Offset	---	-2.12	---	---
TOTAL	**61.51**	**44.46**	**14.93**	**24.3%**

Detailed help on using the CF-1R Certificate of Compliance is available via the Internet by either scanning the QR code or browsing to http://www.title24energycode.org/t24help/cf1r.aspx.

DRAFT

B. REQUIRED SPECIAL FEATURES

Design features described in this Special Features section shall be specified on the building design plans and installed or constructed in accordance with all applicable manufacturer specifications and all applicable requirements given in Title 24, Part 6 as verified by the Enforcement Agency.

1.	Radiant Barriers installed	The radiant barriers installed in this building shall meet eligibility and installation criteria as specified in Reference Residential Appendix RA4.2.2.
2.	Cool Roofing products installed	Cool roof products installed on this building qualifying for compliance with Sections 141(a)1.B, 143(a)1 or 149(b) 1 B,, 151(f)12, or 152(b)1H shall be rated and labeled by the Cool Roof Rating Council in accordance with Section 10-113 of the standards.
3.	Non-default values used	This building incorporates non-standard Duct R-value.

C. REQUIRED COMPLIANCE DOCUMENTS FOR NON-HERS MEASURES

All measures listed in this table shall be installed or constructed in accordance with all applicable manufacturer specifications and all applicable requirements given in Title 24, Part 6 as verified by the Enforcement Agency. The following forms are required for final.

	MEASURE VERIFIATION	Certificate of Installation (CF-2R)
1.	Envelope Insulation, Cool Roof, and Fenestration Values	ENV-tbd
2.	Proper Insulation Installation	ENV-tbd
3.	Envelope Air Sealing Requirements	ENV-tbd
4.	Attic Ventilation	ENV-tbd
5.	Kitchen and Cabinet Lighting Wattage, and both Indoor and Outdoor Mandatory Lighting Controls	LGT-01
6.	High Efficacy Verification for LED and Ballasts	LGT-02
7.	Space Conditioning Systems	MECH-tbd
8.	Evaporatively Cooled Condensing Units	MECH-tbd
9.	Evaporative Coolers	MECH-tbd
10.	ICE Storage Air Conditioners	MECH-tbd
11.	Water Heating Systems	PLB-01
12.	Solar Water Heating	STH-02
13.	Pool and Spa	PLB-04

DRAFT

D. MEASURES THAT REQUIRE HERS VERIFICATION

Measures listed in this table require field testing or verification by the installing contractor and a certified HERS Rater as documented on the applicable Required Compliance Documents. The following forms are required for final.

	Measure (Table Reference)	Required Compliance Documents	
		Certificate of Installation (CF-2R)	Certificate of Verification (CF-3R)
01.	Building Envelope Sealing (E)	E-20	E-20
02.	High Quality Insulation Installation (E)	ENV-21, ENV-22, ENV-23, ENV-24	ENV-21, ENV-22, ENV-23, ENV-24
03.	Duct Sealing (F)	MECH-20, MECH-21	MECH-20, MECH-21
04.	Air Handler Fan Efficacy and system Airflow (F)	MECH-22	MECH-22
05.		tbd	tbd
06.	Energy Efficiency Ratio (EER) or SEER (F)	tbd	tbd
07.	Refrigerant Charge OR Charge Indicator Display (F)	tbd	tbd
08.	Supply Duct Surface Area (F)	tbd	tbd
09.	Supply Duct R-value-Buried Ducts (F)	tbd	tbd
10.	Supply Duct Location (F)	tbd	tbd
11.	Continuous Whole-Building Mechanical Ventilation Airflow (ASHRE 62.2) (E)	tbd	tbd
12.	Intermittent Whole-Building Mechanical Ventilation Airflow (ASHRE 62.2) (E)	tbd	tbd
13.	Verification of Air Filter Device Design (F)	tbd	tbd
14	Verification of Return Duct Design (F)	tbd	tbd
15	Verification of Prescriptive Bypass Duct Requirements (F)	tbd	tbd
16	System Airflow Verification – Altered HVAC System (F)	tbd	tbd
17	Verification of Dwelling Units Hot Water Distribution	PLB-02	PLB-20
18	Verification of Central Hot Water Distribution	PLB-03	PLB-21

DRAFT

E. BUILDING INFORMATION

01	02	03	04	05	06	07	08	09	10	11	12	13	14	15	17	18	19
Dwelling Unit Name	**Number of Dwelling Units**	**Dwelling Unit CFA (FT2)**	**Number of Bedrooms**	**Number of Zones**	**Dishwasher**	**Cloths Washer**	**IAQ Ventilation System Name**	**IAQ Continuous Ventilation Airflow Rate (cfm)**	HERS MCH 27 **HERS Verified IAQ Ventilation Airflow Rate**	**Ventilation Cooling System Name**	HERS MCH 22 **HERS Verified IAQ CFI Air Handler Efficacy Target (W/cfm)**	HERS ENV 20 **HERS Verified Envelope Leakage Target (CFM50h/ACH50)**	HERS ENV 21 **HERS Verified Insulation Installation (QII)**	**Water Heating System Name**	HERS PLB 21 **Dwelling Unit DHW [1]HERS Verified Distribution**	HERS PLB 22 **Central System DHW [1]HERS Verified Distribution**	**Status**
Plan01	2	800	2	1	yes	no	exh50	31	yes	WHF01	n/a	n/a	no	DHW1	yes	yes	N
Plan02	4	1000	2	1	yes	no	HR75	33	yes	n/a	n/a	n/a	no	DHW2	n/a	n/a	E
Plan03	2	1400	3	2	yes	yes	CFI-OA	37	n/a	SmartVnt01	0.58	n/a	no	DHW1	yes	yes	A
Plan04	1	2000	4	3	yes	yes	CFI-Mix	58	n/a	NightBrz01	0.58	n/a	no	DHW1	no	no	N

[1]distribution Types that are not required to be HERS verified shall be verified by the enforcement agency.

Notes:

DRAFT

F. DWELLING UNIT AND ZONE INFORMATION

01	02	03	04	05	06	07	08	09	10	11	12	13	14	15	16	17	18	19	20
										HERS MCH20	HERS MCH 22	HERS MCH 23	HERS MCH26	HERS MCH 25	HERS MCH 20	HERS MCH 29	HERS MCH 28	HERS MCH 31	
Dwelling Unit Name	**HVAC Zone Type**	**HVAC Zone Name**	**HVAC Zone Floor Area (ft^2)**	**Average Ceiling Height**		**Thermostat Type**	**Natural Ventilation Height (FT)**	**Vent Area (FT2)**	**HVAC System Name**	**Duct Leakage Test Target (%)**	**HERS Verified AHU Fan Efficacy Target (W/cfm)**	**HERS Verified AHU Airflow Rate Target (cfm/ton)**	**HERS Verified EER or SEER**	**HERS Verified Refrig. Charge**	**HERS Verified Low Leakage Air Handler**	**HERS Verified Supply Duct Surface Area , R-Value Buried Ducts**	**HERS Verified Return Duct Design - Table 150.0-C or D**	**HERS Verified Zoned Cooling System**	**Status**
Plan01	Conditioned	101	800	8.0		Setback	2.0	Std	HVAC 1	6	0.58	350	SEER 14	yes	no	no	yes	no	N
Plan02	Conditioned	201	1000	8.0		Setback	2.0	Std	HVAC 1	n/a	0.35	350	27 EER	yes	no	no	yes	no	N
Plan03	Conditioned	301	700	8.0		Setback	8.0	Std	HVAC 2	15	n/a	n/a	no	yes	no	no	yes	yes	N
Plan03	Conditioned	302	700	8.0		Setback	8.0	Std	HVAC 2	15	n/a	n/a	no	yes	no	no	yes	yes	N

Notes:

DRAFT

G. OPAQUE SURFACES - Roof Details

01	02	03	04	05	06	07	08	09	10
Roof Type	**Roof Pitch**	**Aged (or Initial?) Solar Reflectance**	**Thermal Emittance**	**Frame Type**	**Frame Depth (in)**	**Frame Spacing (in)**	**R-Value Above Deck**	**R-Value Below Deck**	**Status**
Asphalt	5:12	0.20	0.85	Wood	3.5	24 o.c.	0.00	0.00	
Notes									

H. OPAQUE SURFACES - Attic Details

01	02	03	04	05	06	07	08	09	10	**11**	**12**
Dwelling Unit	**Frame Type**	**Area (ft^2)**	**U-factor**	**Cavity R-value**	**Continuous Insulation R-value**	**Actual Azimuth (deg)**	**Tilt**	**Solar Gains**	**Appendix JA4 Reference**	**Attic Ventilation**	**Status**
Plan01	Wood	44	0.102	30	N/A	0	90	Yes	4.3.1 A3		N
Plan02	Wood	264	0.102	30	N/A	90	90	Yes	4.3.1 A3		N
Plan03	Wood	192	0.102	30	N/A	180	90	Yes	4.3.1 A3		N
Notes											

I. OPAQUE SURFACES - Floor Details

01	02	03	04	05	06	07	08	09	10	11
Dwelling Unit Name	**Surface Type**	**Frame Type**	**Area (ft^2)**	**U-factor**	**Cavity R-value**	**Continuous Insulation R-value**	**Tilt**	**Solar Gains**	**Appendix JA4 Reference**	**Status**
Plan01	Slab Edge	N/A	44	0.102	N/A	5 Int	90	Yes	4.3.1 A3	N
Plan02	Slab Edge	N/A	264	0.102	N/A	0	90	Yes	4.3.1 A3	N
Plan03	Slab Edge	N/A	192	0.102	N/A	5 Ext	90	Yes	4.3.1 A3	N
Plan03	Raised Floor	N/A	192	0.102	19	5 Ext	90	Yes	4.3.1 A3	N
Notes:										

DRAFT

J. MASS SURFACES

01	02	03	04	05	06	07
Dwelling Unit Name	**Zone Name**	**Type**	**Area (FT2)**	**Thickness (inch)**	**Heat Capacity (btu/hr-ft2)**	**Status**
Plan01	101	Carpeted Slab on Grade				N
Plan02	201	Carpeted Slab on Grade				N
Plan03	301	Carpeted Slab on Grade				N

Notes:

K. OPAQUE SURFACES – Wall Details

01	02	03	04	05	06	07	08	09	10	11	12	13
Surface Name	**Frame Type**	**Area (ft^2)**	**U-factor**	**Cavity R-value**	**Continuous Insulation R-value**		**Actual Azimuth**	**Tilt**	**Solar Gains**	**Appendix JA4 Reference**	**Location/Comments**	**Status**
1 Wall	Wood	44	0.102	13	5 Int		0	90	Yes	4.3.1 A3		N
2 Wall	Wood	264	0.102	13	0		90	90	Yes	4.3.1 A3		N
3 Wall	Wood	192	0.102	13	5 Ext		180	90	Yes	4.3.1 A3		N
4 Wall	Wood	288	0.102	13	0		270	90	Yes	4.3.1 A3		N
5 Wall	Wood	140	0.102	13	0		0	90	No	4.3.1 A3	To Garage	N
6 Wall	Wood	37	0.102	13	0		45	90	Yes	4.3.1 A3	Corner wall	N
7 Attic	Wood	1592	0.025	38	0		N/A	0	Yes	4.2.1 A21		N
8 Door	Wood	20	0.500	0	0		0	90	Yes	4.5.1 A4		N

Notes:

DRAFT

L. Demising Walls

01	02	03	04	05	06	07	**08**	**09**	**10**	**11**	**12**	**13**
Surface Type	**Frame Type**	**Area (ft^2)**	**U-factor**	**Cavity R-value**	**Continuous Insulation R-value**		**Actual Azimuth**	**Tilt**	**Solar Gains**	**Appendix JA4 Reference**	**Location/Comments**	**Status**

Notes:

DRAFT

M. FENESTRATION SURFACES

01	02	03	04	05	06	07	**08**	**09**	**10**	**11**
Orientation	**Surface**	**Area (ft^2)**	**U-factor**	**SHGC**	**Source**	**Actual Azimuth**	**Tilt**	**Film SHGC**	**Location/Glazing Type**	**Status**
1 Wind Front (N)	1 Wall	24.0	0.400	0.350	NFRC	0	90	N/A	F1/Vinyl/Wood Operable L	N
2 Wind Front (N)	1 Wall	40.0	0.400	0.350	NFRC	0	90	N/A	F2/Vinyl/Wood Fixed Low	N
3 Wind Left (E)	2 Wall	24.0	0.400	0.350	NFRC	90	90	N/A	L1/Vinyl/Wood Operable L	N
4 Wind Back (S)	3 Wall	48.0	0.400	0.350	NFRC	180	90	N/A	B1/Vinyl/Wood Operable L	N
5 Door Back (S)	3 Wall	80.0	0.400	0.350	NFRC	180	90	N/A	B2/Vinyl/Wood Patio Door	N
6 Wind Right (W)	4 Wall	32.0	0.400	0.350	NFRC	270	90	N/A	R1/Vinyl/Wood Operable L	N
7 Wind Front (NE)	6 Wall	8.0	0.400	0.350	NFRC	45	90	N/A	C1/Vinyl/Wood Fixed Low	N
8 Skylight Front (N)	7 Attic	8.0	0.450	0.350	NFRC	0	23	N/A	SKY1/Vinyl/Wood Skylight	N
Notes										

DRAFT

N. EXTERIOR SHADING

Window					Overhang				Side Fin				Status
01	02	03	04	05	06	07	08	09	10	11	12	13	14
Surface Name	Exterior Shade Type	Area (ft^2)	Width	Height	Depth	Height	Left Extension	Right Extension	Left Dist	Left Len	Right Dist	Right Len	N
1 Window	Standard	24.0	6.0	4.0	2.0	1.5	N/A	N/A	N/A	N/A	N/A	N/A	N
2 Window	Standard	40.0	8.0	5.0	2.0	1.5	N/A	N/A	N/A	N/A	N/A	N/A	N
3 Window	Standard	24.0	6.0	4.0	2.0	0.5	N/A	N/A	N/A	N/A	N/A	N/A	N
4 Window	Standard	48.0	6.0	8.0	2.0	0.5	N/A	N/A	N/A	N/A	N/A	N/A	N
5 Door	Standard	80.0	16.0	6.7	2.0	0.5	N/A	N/A	N/A	N/A	N/A	N/A	N
6 Window	Standard	32.0	N/A	N/A	N/A	N/A	N/A	N/A	N/A	N/A	N/A	N/A	N
7 Window	Standard	8.0	N/A	N/A	N/A	N/A	N/A	N/A	N/A	N/A	N/A	N/A	N
8 Skylight	None	8.0	N/A	N/A	N/A	N/A	N/A	N/A	N/A	N/A	N/A	N/A	N
Notes:													

O. Space Conditioning (SC) System SIZING

01	02	03	04	05	06
Dwelling Unit Name	Calculated Design Total Heating Load (Btuh)	Nominal System Heating Capacity (Btuh)	Calculated Design Latent Cooling Load (Btu/hr)	Calculated Design Sensible Cooling Load (Btu/hr)	Nominal System Cooling Capacity (ton)
Plan01					
Plan02					
Plan03					
Plan04					
Sizing Location	**Winter Outside Design**	**Winter Inside Design**	**Summer Outside Design**	**Summer Inside Design**	**Summer Range**
SACRAMENTO AP	26 F	70 F	98 F	75 F	35 F
Notes					

DRAFT

P. SPACE CONDITIONING (SC) SYSTEMS

01	02	03	04	05	06	07	08	09	10
SC System Identification or Name	Heating System Type	Heating Efficiency	Cooling System Type	Cooling Efficiency SEER	Cooling Efficiency EER	Duct System Name	Cooling Zoning Type	Air-Handling Unit Fan Type	Status
SCS01	Furnace80	0.800 AFUE	AC Split	13.0	n/a	DuctSup01	NotZonal	PSC01	N
SCS02			AC packaged	13.0	n/a	Default01	ZonalSingleSpeed	BPM01	N
SCS03	HP		mini-split	18.4	15	ductless01	NotZonal	n/a	N
Notes:									

Q. SPACE CONDITIONING (SC) DUCTS

01	02	03	04	05	06	07	08
Duct System Name	Return Duct System Type	Return Duct R-Value	Return Duct Location	Supply Duct System Name	Supply Duct R-Value	Supply Duct Location	Status
DuctSup01	default	6	crawl Space	Sd-01	n/a	n/a	N
Default01	default	6	12-In-Attic	Default	8	12-In-Attic	N
ductless01	ductless	n/a					
noDucts01	no ducts	n/a					
Notes							

DRAFT

R. SPACE CONDITIONING (SC) SUPPLY DUCT DETAIL DESIGN

01	02	03	04	05	06	07	08	09	10
Supply Duct System Name	Duct Segment Name	Duct Location	Duct Length (ft)	Duct Diameter (in)	Duct R-value	Buried Duct	Attic R-value	Attic Insulation Type	Status
Sd-01	1 Main	Attic	20	6.0	R-4.2	Deep	R-30	Fiberglass	N
Sd-01	2 Main	Attic	20	6.0	R-4.2	Deep	R-30	Fiberglass	N
Sd-01	3-trunk								
Sd-01	4-trunk								

Notes:

S. Fan Systems

01	02	03	04	05	06	07	08	09	10
Fan System Name	Fan System Type	Fan Efficacy (W/cfm)	Airflow Rate (cfm)	IAQ Standalone Fan Type	IAQ Heat Recovery Effectiveness Balanced	IAQ CFI Type	IAQ Supply Fan for CFI Mixing		Status
PSC01	SinglSpPSC	0.58	1200	n/a	n/a	n/a	n/a		N
BPM01	BPM	0.58	1000	n/a	n/a	n/a	n/a		N
WHF01	WholeHouseFan		2000	n/a	n/a	n/a	n/a		N
IAQ50	IAQ-Stndalone	0.25	50	Exhaust	n/a	n/a	n/a		N
NightBrz01	VariableSpeed	0.58	n/a	n/a	n/a	n/a	n/a		N
SmartVnt01	fixed speed	0.58	1200	n/a	n/a	n/a	n/a		N
CFI01	SingleSpPsc	0.58	1600	n/a	n/a	VentDamper	n/a		N
CFI02	BPM	0.58	1600	n/a	n/a	VentMixing	IAQ50		N
CFI03	BPM	0.33	1600	n/a	n/a	VentDamper	n/a		N

Notes:

T. WATER HEATING SYSTEMS

01	02	03	04	05	06	07	08	09	10	11	12	13	14	15	16	17	18
Water Heating System Name	Water Heating System Type	Central Distribution Type	Dwelling Unit Distribution Type	DHW Water Heater Type	Energy Factor or Recovery Efficiency or Thermal Efficiency	Rated Input (Btuh)	Standby Loss Total (Btuh)	Pilot Energy (Btuh)	Standby Loss (%)	Water Heater Volume (gal)	Number of water heaters in System	Water Heater Tank Exterior Insulation	Supplemental Tank Volume (gal)	Supplemental Tank External Insulation R-value	Supplemental Tank Interior Insulation R-Value	Solar Fraction ( )	Status
MF-Cen01b	DHW	n/a	Standard	Small Storage	0.60				N/A	50	1			n/a			N
Hydronic01	Hydronic	n/a	Standard	Small Storage	0.60				N/A	50	1			n/a			N
DHW-2	Comb Hydronic	n/a	HERS-POU	Small Storage	0.60				N/A	50	1			n/a			N

Notes:

U. HYDRONIC HEATING SYSTEM PIPING

01	02	03	04
System Name	**Pipe Length (FT)**	**Nominal Pipe Diameter (inch)**	**Insulation R-Value**
hydronic01	**20**	**.75**	**4**

Notes:

DRAFT

V. Solar Photovoltaic Systems			
Notes:			

DRAFT

Documentation Author's Declaration Statement:

- I certify that this Certificate of Compliance documentation is accurate and complete.

Name:	Signature:
Company :	Signature Date:
Address:	If Applicable CEA or CEPE Certification Identification:
City/State/Zip:	Phone:

Responsible Building Designer's Declaration Statement:

- I am eligible under Division 3 of the California Business and Professions Code to accept responsibility for the building design identified on this Certificate of Compliance.
- I certify that the energy features and performance specifications for the building design identified on this Certificate of Compliance conform to the requirements of Title 24, Parts 1 and 6 of the California Code of Regulations.
- The building design features identified on this Certificate of Compliance are consistent with the information provided to document this building design on the other applicable compliance documentation, worksheets, calculations, plans and specifications submitted to the enforcement agency for approval with this building permit application.

Name:	Signature:
Company:	Signature Date:
Address:	License:
City/State/Zip:	Phone:

DRAFT

SOLAR READY AREA – NEW CONSTRUCTION

CERTIFICATE OF COMPLIANCE	CF1R-SRA-01-E
Solar Ready Area– New Construction	(Page 1 of 3)
Project Name:	Date Prepared:

General Information

Building Type:

☐ Single Family Residence The single family residence shall comply with the requirements of Standards Section 110.10(b) through 110.10(e).

☐Low-Rise Multifamily The low-rise multifamily building shall comply with the requirements of Standards Section 110.10(b) through 110.10(d).

Use form NRCC-SRA-01-E to show solar ready compliance for hotel/motel occupancies and high-rise multifamily buildings with ten stories or fewer and all other nonresidential buildings with three stories or fewer.

Solar-Ready **Choose one option from A, B, C, D or E or F below.**

☐ A. Allocated Solar Zone, Interconnection, Documentation and Electrical Service Requirements

CF1R-SRA-02-E Minimum Solar Zone Area Worksheet is required to be submitted.

Minimum Solar Zone Area (sqft) This is quantity [C] from SRA-02-E for single family and quantity [J] for low-rise multifamily buildings	
Proposed Solar Zone Area (sqft) This is quantity [S] from SRA-02-E for both single family and low-rise multifamily buildings	
The construction documents will indicate a location for inverters and metering equipment and a pathway for routing of conduit from the solar zone to the point of interconnection with the electrical service. The construction documents will indicate a pathway for routing of plumbing from the solar zone to the water heating system.	
A copy of the construction documents or a comparable document indicating information about the solar zone and interconnection pathways will be provided to the occupant.	
For Single Family Residences only: • The main electric service panel shall have a minimum busbar rating of 200 amps. The main electric service panel shall have reserved space to allow for the installation of a double pole circuit breaker. The reserved space shall be positioned at the opposite (load) end from the input feeder location or main circuit location. The reserved space shall be permanently marked as "For Future Solar Electric".	
If the installer certifies that all above requirements have been met and the Proposed Solar Zone Area meets or exceeds the Minimum Solar Zone Area, the building complies, otherwise it does not comply.	☐ **does not comply** ☐ **complies**

☐ B. Residence not in an Applicable Subdivision

Is this a single family residence located in subdivisions with ten or more single family residences and where the application for a tentative subdivision map for the residences has been deemed complete, by the enforcement agency, on or after January 1, 2014	☐ Yes ☐ No
Please check box to right if answered no to the above question in this section.	☐ **EXEMPT**

For information and data collection only. Not valid until registered with a HERS provider

CERTIFICATE OF COMPLIANCE	CF1R-SRA-01-E
Solar Ready Area– New Construction	(Page 2 of 3)
Project Name:	Date Prepared:

☐ C. Permanently Installed Solar Photovoltaic (PV) System

Will the proposed building have a permanently installed solar electric (PV) system? If yes, a *CF2R-SPV-01-E Certificate of Installation: Photovoltaic System Verification* will be required to be submitted as a condition of final approval.	☐ Yes ☐ No
Enter the Proposed Nameplate DC Power Rating for the PV System (watts)	
For Single Family Dwellings: Will the Proposed Nameplate DC Power Rating be equal to or greater than Minimum Nameplate DC Power Rating of 1000 Watts?	☐ Yes ☐ No
For Low Rise Multifamily: Calculate the Minimum Nameplate DC Power Rating (watts) = Total Roof Area (ft2) * (1 Watt/ ft2)	
For Low Rise Multifamily: Will the Proposed Nameplate DC Power Rating be equal to or greater than the Minimum Nameplate DC Power Rating?	☐ Yes ☐ No
If the proposed building will have a Permanently installed PV System that meets or exceeds the applicable Minimum Nameplate DC Power Rating the building is exempt from the Solar Ready Area requirements.	☐ **EXEMPT**

☐ D. Permanently Installed Solar Water Heating System

Will the proposed building have a permanently installed solar water heating system? If yes, a *CF2R-STH-01-E Certificate of Installation: Solar Water Heating Systems* will be required to be submitted as a condition of final approval.	☐ Yes ☐ No
Will the annual solar savings fraction equal to or greater than the minimum requirements for exemption? For single family: equal to or greater than 0.5 For low-rise multi-family: equal to or great than 0.2 in climate zones 1 through 9, or 0.35 in climate zones 10 through 16	☐ Yes ☐ No
Please check box to right if answered yes to all questions in this section.	☐ **EXEMPT**

☐ E. Smart Thermostats and High Efficacy Lighting

Will all thermostats in each dwelling unit comply with Reference Joint Appendix 5 (JA5) and are they going to be capable of receiving and responding to Demand Response Signals prior to granting of an occupancy permit by the enforcing agency?	☐ Yes ☐ No
Will all installed luminaires be classified as high efficacy in accordance with the applicable requirements in Section 130.0(c), and in accordance with TABLE 150.0-A or TABLE 150.0-B?	☐ Yes ☐ No
Please check box to right if answered yes to all questions in this section.	☐ **EXEMPT**

☐ F. Roof is Designed for Vehicle Traffic or Parking or for Heliport (Applies to Low-rise Multifamily only)

Is the roof designed and approved to be used for vehicular traffic or parking or for a heliport.	☐ Yes ☐ No
Please provide building plan reference _____.	
Please check box to right if answered yes to the above question in this section.	☐ **EXEMPT**

Instructions to Applicant Solar-ready Compliance & Worksheets

(check box if worksheet are included)

- ☐ CF2R-SRA-01-E Certificate of Compliance Solar-ready. *Required on plans for all submittals.*
- ☐ CF2R-SRA-02-E Minimum Solar Zone Area Worksheet. *Required for compliance path A.*
- ☐ CF2R-SPV-01-E Certificate of Installation – Solar Photovoltaic Verification *Required for compliance path C.*
- ☐ CF2R-STH-01-E Certificate of Installation: Solar Water Heating Systems *Required for compliance path D.*

For information and data collection only. Not valid until registered with a HERS provider

CERTIFICATE OF COMPLIANCE	CF1R-SRA-01-E
Solar Ready Area– New Construction	(Page 3 of 3)
Project Name:	Date Prepared:

DOCUMENTATION AUTHOR'S DECLARATION STATEMENT	
1. I certify that this Certificate of Compliance documentation is accurate and complete.	
Documentation Author Name:	Documentation Author Signature:
Company:	Signature Date:
Address:	CEA/ HERS Certification Identification (if applicable):
City/State/Zip:	Phone:

RESPONSIBLE PERSON'S DECLARATION STATEMENT

I certify the following under penalty of perjury, under the laws of the State of California:

1. The information provided on this Certificate of Compliance is true and correct.
2. I am eligible under Division 3 of the Business and Professions Code to accept responsibility for the building design or system design identified on this Certificate of Compliance (responsible designer).
3. That the energy features and performance specifications, materials, components, and manufactured devices for the building design or system design identified on this Certificate of Compliance conform to the requirements of Title 24, Part 1 and Part 6 of the California Code of Regulations.
4. The building design features or system design features identified on this Certificate of Compliance are consistent with the information provided on other applicable compliance documents, worksheets, calculations, plans and specifications submitted to the enforcement agency for approval with this building permit application.
5. I will ensure that a registered copy of this Certificate of Compliance shall be made available with the building permit(s) issued for the building, and made available to the enforcement agency for all applicable inspections. I understand that a registered copy of this Certificate of Compliance is required to be included with the documentation the builder provides to the building owner at occupancy.

Responsible Designer Name:	Responsible Designer Signature:
Company :	Date Signed:
Address:	License:
City/State/Zip:	Phone:

For information and data collection only. Not valid until registered with a HERS provider

MINIMUM SOLAR ZONE AREA WORKSHEET – NEW CONSTRUCTION

Project Name:	Date Prepared:

Solar Zone Area (requirements in §110.10 (b)1A Exception 3, 4, 5, or 6 and §110.10 (b)1B)

This worksheet applies to single family residences located in subdivisions with ten or more single family residences and where the application for a tentative subdivision map for the residences has been deemed complete, by the enforcement agency, on or after January 1, 2014, and which wish to show compliance with a reduced solar zone area per Exceptions 3, 4, 5 or 6 to the requirements of Section 110.10(b)1A. Note that Exceptions 1, 2, and 7 exempt a residence from the solar ready requirements and are documented on the Certificate of Compliance Form CF1R-SRA-01-E. Check the exception being used and fill in the relevant details.

This worksheet applies to low-rise multifamily projects that wish to show compliance with a reduced solar zone allowed under Exception 3 of Section 110.10(b)1B. Note that Exceptions 1, 2, 4, and 5 exempt a residence from the solar ready requirements and are documented on the Certificate of Compliance Form CF-1R-SRA-01-E. Check the exception being used and fill in the relevant details.

General Information

Building Type:

☐ Single Family The residence shall comply with the requirements of Standards Section 110.10(b) through 110.10(e).

☐ Low-rise Multifamily The low-rise multifamily building shall comply with the requirements of Standards Section 110.10(b) through 110.10(d)

Step 1: Determine Minimum Solar Zone Area

Single Family Residences

Calculate the minimum solar zone area using one of the four options provided below. Use method 3 if your roofs and overhangs are shaded.

☐ **Method 1. Reduced Solar Zone Area For Small, Tall Residences**

Does the single family residence have three stories or more? ☐ Yes ☐ No

Does the single family residences have a total floor area less than or equal to 2000 square feet ☐ Yes ☐ No

Please check box to right if answered yes to all questions in this section. ☐ **REDUCED SOLAR ZONE AREA OF 150 ft^2 APPLIES**

☐ **Method 2. Reduced Solar Zone Area for Homes With a Whole House Fan in a Wildland-Urban Interface in Climate Zones 8-14**

Is the residence located in climate zones 8-14? ☐ Yes ☐ No

Is the residence in a designated Wildland-Urban Interface Fire Area as defined in Title 24, Part 2? ☐ Yes ☐ No

Does the residence have a whole house fan? ☐ Yes ☐ No

Please check box to right if answered yes to all questions in this section. ☐ **REDUCED SOLAR ZONE AREA OF 150 ft^2 APPLIES**

☐ **Method 3. Reduced Solar Zone Area for Homes with Limited Solar Access** ***(requirements in 110.10(b)1A)***

The enforcement agency may require additional documentation that describes how the reduced solar zone area was determined.

List the Method/Tool(s) used to quantify annual solar access: (for example, "Software X," "CAD Tool Y"			
Area of low-sloped roof (ratio of rise to run of 2:12 or less) where the annual solar access is 70 percent or greater.	A		ft^2
Area of steep-sloped roof (ratio of rise to run is greater than 2:12) that is oriented between 110 and 270 degrees and annual solar access is 70 percent or greater.*	B		ft^2
Minimum solar zone area becomes	**C** = 0.5 x (A + B)		ft^2

Please check box to right if this section is completed. ☐ **REDUCED SOLAR ZONE AREA (calculated) APPLIES**

☐ **Method 4. Reduced Solar Zone Area for Homes with "Smart Thermostats"**

Are all thermostats "Smart Thermostats" complying with Reference Joint Appendix JA5 and are they capable of receiving and responding to Demand Response Signals? ☐ Yes ☐ No

Please check box to right if answered yes to all questions in this section. ☐ **REDUCED SOLAR ZONE AREA OF 150 ft^2 APPLIES**

For information and data collection only. Not valid until registered with a HERS provider

MINIMUM SOLAR ZONE AREA WORKSHEET – NEW CONSTRUCTION

Project Name:	Date Prepared:

Low-Rise Multifamily

Calculate the minimum solar zone area using one of the two options provided below. Use option 2 if your roofs and overhangs are shaded.

Method 1: Minimum Solar Zone Area Based on Total Roof Area (requirements in 110.10(b)1B)

New Construction: Total roof area Additions: Total roof area added to building	D		ft^2
New Construction: Area of roof covered with skylights Additions: Area of new roof area covered with skylights	E		ft^2
Minimum solar zone area	F = 0.15 x (D – E)		ft^2

Note: For additions, if A≤ 2,000 ft^2 then addition does not need to comply with solar zone requirements

Method 2: Minimum Solar Zone Area Based on Potential Solar Zone (requirements in Exception 3 to 110.10(b)1B)

The enforcement agency may require additional documentation that describes how the reduced solar zone area was determined.

List the Method/Tool(s) used to quantify annual solar access: (for example, "Software X," "CAD Tool Y"			
Area of low-sloped roof (ratio of rise to run of 2:12 or less) where the annual solar access is 70 percent or greater.*	G		ft^2
Area of steep-sloped roof (ratio of rise to run is greater than 2:12) that is oriented between 110 and 270 degrees and annual solar access is 70 percent or greater.*	H		ft^2
Minimum solar zone area	I = 0.5 x (G + H)		ft^2

* For new construction consider total roof area; for additions consider newly added roof area

Minimum solar zone area (either F or I)	**J**		ft^2

For information and only. Not valid until registered HERS provider

Step 2: Allocated Solar Zone Subareas (for both SF and low-rise MF)

Subarea ID	Building Plan Reference	Slope of Roof or Overhang	If Steep Slope, roof or overhang oriented between 110 and 270 degrees	Subarea complies with Part 9 of Title 24 [A]	Subarea is free of obstructions [B]	Subarea is located the appropriate distance from obstructions [C]	Smallest dimension is greater than 5 feet	Subarea meet minimum area requirement [D]	Subarea Qualifies [E]	Area
H	I	J	K	L	M	N	O	P	Q	R
		☐ Low ☐ Steep	☐ Yes ☐ No	☐ Yes ☐ No	☐ Yes ☐ No	☐ Yes ☐ No	☐ Yes ☐ No	☐ Yes ☐ No	☐ Yes ☐ No	ft^2
		☐ Low ☐ Steep	☐ Yes ☐ No	☐ Yes ☐ No	☐ Yes ☐ No	☐ Yes ☐ No	☐ Yes ☐ No	☐ Yes ☐ No	☐ Yes ☐ No	ft^2
		☐ Low ☐ Steep	☐ Yes ☐ No	☐ Yes ☐ No	☐ Yes ☐ No	☐ Yes ☐ No	☐ Yes ☐ No	☐ Yes ☐ No	☐ Yes ☐ No	ft^2
		☐ Low ☐ Steep	☐ Yes ☐ No	☐ Yes ☐ No	☐ Yes ☐ No	☐ Yes ☐ No	☐ Yes ☐ No	☐ Yes ☐ No	☐ Yes ☐ No	ft^2
		☐ Low ☐ Steep	☐ Yes ☐ No	☐ Yes ☐ No	☐ Yes ☐ No	☐ Yes ☐ No	☐ Yes ☐ No	☐ Yes ☐ No	☐ Yes ☐ No	ft^2
		☐ Low ☐ Steep	☐ Yes ☐ No	☐ Yes ☐ No	☐ Yes ☐ No	☐ Yes ☐ No	☐ Yes ☐ No	☐ Yes ☐ No	☐ Yes ☐ No	ft^2
		☐ Low ☐ Steep	☐ Yes ☐ No	☐ Yes ☐ No	☐ Yes ☐ No	☐ Yes ☐ No	☐ Yes ☐ No	☐ Yes ☐ No	☐ Yes ☐ No	ft^2
		☐ Low ☐ Steep	☐ Yes ☐ No	☐ Yes ☐ No	☐ Yes ☐ No	☐ Yes ☐ No	☐ Yes ☐ No	☐ Yes ☐ No	☐ Yes ☐ No	ft^2
									Proposed Solar Zone Area (sum of all qualifying subareas) [S]	**ft^2**

A. The solar zone shall comply with access, pathway, smoke ventilation, and spacing requirements as specified in Title 24, Part 9 or other Parts of Title 24 or in any requirements adopted by a local jurisdiction.

B. No obstructions, including but not limited to, vents, chimneys, architectural features, and roof mounted equipment, shall be located in the solar zone.

C. Solar zone must be located no closer than twice the distance, measured in the horizontal plane, of the height difference between the highest point of the obstruction and the horizontal projection of the nearest point of the solar zone, measured in the vertical plane.

D. If building roof area ≤ 10,000 ft^2 then minimum area is 80ft^2. If building roof area >10,000 ft^2 then minimum area is 160ft^2.

E. Check "yes" if answers to questions in columns K through P are "yes".

☐ **Building Complies with Minimum Solar Zone Area Requirement**

Check box if the sum of all subareas [S] is equal to or greater than the minimum solar zone area? ☐
(Minimum solar zone area is [C] for single family; [J] for low-rise multifamily)

For information and data collection only. Not valid until registered with a HERS provider

DOCUMENTATION AUTHOR'S DECLARATION STATEMENT	
1. I certify that this Certificate of Compliance documentation is accurate and complete.	
Documentation Author Name:	Documentation Author Signature:
Company:	Signature Date:
Address:	CEA/ HERS Certification Identification (if applicable):
City/State/Zip:	Phone:

RESPONSIBLE PERSON'S DECLARATION STATEMENT

I certify the following under penalty of perjury, under the laws of the State of California:

1. The information provided on this Certificate of Compliance is true and correct.
2. I am eligible under Division 3 of the Business and Professions Code to accept responsibility for the building design or system design identified on this Certificate of Compliance (responsible designer).
3. That the energy features and performance specifications, materials, components, and manufactured devices for the building design or system design identified on this Certificate of Compliance conform to the requirements of Title 24, Part 1 and Part 6 of the California Code of Regulations.
4. The building design features or system design features identified on this Certificate of Compliance are consistent with the information provided on other applicable compliance documents, worksheets, calculations, plans and specifications submitted to the enforcement agency for approval with this building permit application.
5. I will ensure that a registered copy of this Certificate of Compliance shall be made available with the building permit(s) issued for the building, and made available to the enforcement agency for all applicable inspections. I understand that a registered copy of this Certificate of Compliance is required to be included with the documentation the builder provides to the building owner at occupancy.

Responsible Designer Name:	Responsible Designer Signature:
Company :	Date Signed:
Address:	License:
City/State/Zip:	Phone:

For information and data collection only. Not valid until registered with a HERS provider

OG 300 SOLAR WATER HEATING WORKSHEET

Project Name:	Enforcement Agency:	Permit Number:
Dwelling Address:	City	Zip Code

A. General System Information		
01	Water Heating System Name:	
02	Conditioned Floor Area (ft^2)	
03	Climate Zone:	
04	Solar System Manufacturer	
05	Model Number	
06	SRCC Certification Number	

B. Inputs for Systems SRCC OG-300		
01	Solar Energy Factor of OG-300 solar water heating system, as listed in SRCC directory	
02	Type of back up water heater: gas or electric	
03	Calculated Solar Savings Fraction	

For information and data collection only. Not valid until registered with a HERS provider

CERTIFICATE OF COMPLIANCE		CF1R-STH-01-E
OG 300 Solar Water Heating Worksheet		(Page 2 of 2)
Project Name:	Enforcement Agency:	Permit Number:
Dwelling Address:	City	Zip Code

DOCUMENTATION AUTHOR'S DECLARATION STATEMENT	
1. I certify that this Certificate of Compliance documentation is accurate and complete.	
Documentation Author Name:	Documentation Author Signature:
Company:	Signature Date:
Address:	CEA/ HERS Certification Identification (if applicable):
City/State/Zip:	Phone:

RESPONSIBLE PERSON'S DECLARATION STATEMENT

I certify the following under penalty of perjury, under the laws of the State of California:

1. The information provided on this Certificate of Compliance is true and correct.
2. I am eligible under Division 3 of the Business and Professions Code to accept responsibility for the building design or system design identified on this Certificate of Compliance (responsible designer).
3. That the energy features and performance specifications, materials, components, and manufactured devices for the building design or system design identified on this Certificate of Compliance conform to the requirements of Title 24, Part 1 and Part 6 of the California Code of Regulations.
4. The building design features or system design features identified on this Certificate of Compliance are consistent with the information provided on other applicable compliance documents, worksheets, calculations, plans and specifications submitted to the enforcement agency for approval with this building permit application.
5. I will ensure that a registered copy of this Certificate of Compliance shall be made available with the building permit(s) issued for the building, and made available to the enforcement agency for all applicable inspections. I understand that a registered copy of this Certificate of Compliance is required to be included with the documentation the builder provides to the building owner at occupancy.

Responsible Designer Name:	Responsible Designer Signature:
Company :	Date Signed:
Address:	License:
City/State/Zip:	Phone:

For information and data collection only. Not valid until registered with a HERS provider

A. General System Information

01 Enter the water heating system name

02 Enter the conditioned floor area

03 Enter the climate zone of the system being installed

04 Enter the solar water heating system manufacturer

05 Enter the model number

06 Enter the SRCC Certification Number

B. Inputs for Systems SRCC OG-300

01 Enter the Solar Energy Factor of OG-300 solar water heating system, as listed in SRCC directory

02 Pick the type of back up water heater: gas or electric

For information and data collection only. Not valid until registered with a HERS provider

A. General System Information		
01	Water Heating System Name:	<<text (from Certificate of Compliance)>>
02	Conditioned Floor Area (ft^2)	<<numeric (from Certificate of Compliance)>>
03	Climate Zone:	<<numeric (from Certificate of Compliance)>>
04	Solar System Manufacturer	<<text (user input)>>
05	Solar System Model Number	<<text (user input)>>
06	Solar System SRCC Certification Number	<<text (user input)>>

B. Inputs for Systems SRCC OG-300		
01	Enter Solar Energy Factor of OG-300 solar water heating system as listed in SRCC directory	<<text (user input)>>
02	Type of back up water heater: either gas or electric	<<user selects either gas or electric (user input)>> EF is 0.6 for gas; EF is 0.9 for electric
03	Calculated Solar Savings Fraction	<<numeric from calculation below>>

B03 calculation	
1	From B01
2	From B02
3	41045.00
4	3500.00
5	(21.5+0.014*CFA)
6	64.30
7	135.00
8	Inlet water temperature from Table 1 based on Climate Zone
9	line 11-line 10
10	1500.00
11	Solar radiation level from Table 1 based on Climate Zone
12	Multiply line 2 by line 3
13	Divide line 12 by line 1
14	Divide line 5 by line 6
15	Divide the result in line 9 by 77
16	Subtract 1 by line 2
17	Multiply lines 13, 14 and 15
18	Multiply line 4 by line 16
19	Add line 17 to line 18

For information and data collection only. Not valid until registered with a HERS provider

20	Divide line 19 by line 3
21	Divide line 10 by line 11
22	Multiply line 20 by line 21
23	Subtract 1 by line 22
B03 = Line 23	

TABLE 1		
Climate Zone	Water Temperature	Solar Radiation
1	53.90	1220
2	57.52	1220
3	57.69	1533
4	59.12	1601
5	57.93	1602
6	61.55	1599
7	62.63	1586
8	62.97	1682
9	63.76	1685
10	63.76	1612
11	61.00	1580
12	59.65	1670
13	63.99	1726
14	61.48	1827
15	73.55	1884
16	50.54	1513

For information and data collection only. Not valid until registered with a HERS provider

OG 100 SOLAR WATER HEATING WORKSHEET

Project Name:	Enforcement Agency:	Permit Number:
Dwelling Address:	City	Zip Code

A. General System Information		
01	Water Heating System Name	
02	Climate Zone	
03	Collector Manufacturer	
04	Collector Brand	
05	Collector Model Number	
06	SRCC Certification Number	
07	Name of Program Used to generate solar thermal performance	
08	Version of software used	
09	Collector Type	
10	Collector Area in ft^2	
11	Collector Rated Efficiency Curve Slope	
12	Collector Rated Efficiency Curve Intercept	
13	Number of Collectors	
14	Collector Fluid	
15	Water Heater Storage Volume in gallons	
16	Secondary Storage Tank Volume in gallons (If used)	
17	Collector angle from true north in degrees	
18	Collector slope form horizontal in degrees	
19	Floor area of building in ft^2	
20	Number of identical dwelling units	
21	Calculated Solar Fraction	

For information and data collection only. Not valid until registered with a HERS provider

OG 100 SOLAR WATER HEATING WORKSHEET

Project Name:	Enforcement Agency:	Permit Number:
Dwelling Address:	City	Zip Code

DOCUMENTATION AUTHOR'S DECLARATION STATEMENT	
1. I certify that this Certificate of Compliance documentation is accurate and complete.	
Documentation Author Name:	Documentation Author Signature:
Company:	Signature Date:
Address:	CEA/ HERS Certification Identification (if applicable):
City/State/Zip:	Phone:

RESPONSIBLE PERSON'S DECLARATION STATEMENT

I certify the following under penalty of perjury, under the laws of the State of California:

1. The information provided on this Certificate of Compliance is true and correct.
2. I am eligible under Division 3 of the Business and Professions Code to accept responsibility for the building design or system design identified on this Certificate of Compliance (responsible designer).
3. That the energy features and performance specifications, materials, components, and manufactured devices for the building design or system design identified on this Certificate of Compliance conform to the requirements of Title 24, Part 1 and Part 6 of the California Code of Regulations.
4. The building design features or system design features identified on this Certificate of Compliance are consistent with the information provided on other applicable compliance documents, worksheets, calculations, plans and specifications submitted to the enforcement agency for approval with this building permit application.
5. I will ensure that a registered copy of this Certificate of Compliance shall be made available with the building permit(s) issued for the building, and made available to the enforcement agency for all applicable inspections. I understand that a registered copy of this Certificate of Compliance is required to be included with the documentation the builder provides to the building owner at occupancy.

Responsible Designer Name:	Responsible Designer Signature:
Company :	Date Signed:
Address:	License:
City/State/Zip:	Phone:

For information and data collection only. Not valid until registered with a HERS provider.

A. General System Information

01 Water Heating System Name: Enter the name of the water heating system.

02 California Climate Zone: Enter the climate zone the project was performed for.

03 Collector Manufacturer: Enter the name of the collector manufacturer

04 Collector Brand: Enter the Brand name of the collector if different than the Manufacturer.

05 Collector Model Number: Enter the collector model number as listed in the SRCC directory

06 SRCC Certification Number: Enter the SRCC Certification Number from the SRCC directory

07 Name of Program Used to generate solar thermal performance: Enter the name of the solar thermal simulation tool used. If other than California F-chart the program must be approved for use by the Commission

08 Version of software used: Enter if applicable the version of the simulation tool used.

09 Collector Type: Enter the collector type listed in the SRCC directory

10 Collector Area (sq ft): Enter the listed square footage of the collector as listed in the SRCC directory.

11 Collector Rated Efficiency Curve Slope: Enter the slope of the collector listed in the SRCC directory

12 Collector Rated Efficiency Curve intercept: Enter the intercept of the collector listed in the SRCC directory

13 Number of Collectors: Enter the number of collectors included in the simulation run.

14 Collector Fluid: Enter the type of fluid used in the collector (i.e. water, glycol, air).

15 Water Heater Storage Volume: Enter the number of gallons of fluid in the primary water heater storage tank.

16 Secondary Storage Tank Volume: IF applicable enter the volume of the secondary tank used for solar storage; this may include more than one tank.

17 Collector angle from true north in degrees: Enter the angle of the collectors from true north used in simulation. Note in calculating the angle be sure to include the regions magnetic declination.

18 Collector slope form horizontal in degrees: Enter the slope of the collectors from horizontal as used in the simulation.

19 Floor area of building: Enter the square footage of the building.

20 Number of identical dwelling units: Enter the number of units in the building

21 Calculated Solar Fraction: Enter the average annual solar fraction, or note that hourly data was used.

For information and data collection only. Not valid until registered with a HERS provider

Solar Fractions Water Heating Calculation for Built up Equipment

A. General System Information		
01	Water Heating System Name	<<text (user input)>>
02	Climate Zone	<<numeric (user input)>>
03	Collector Manufacturer	<<text (user input)>>
04	Collector Brand	<<text (user input)>>
05	Collector Model Number	<<text (user input)>>
06	SRCC Certification Number	<<text (user input)>>
07	Name of Program Used to generate solar thermal performance	<<text (user input)>>
08	Version of software used	<<text (user input)>>
09	Collector Type	<<text (user input)>>
10	Collector Area in ft^2	<<numeric xxx (user input)>>
11	Collector Rated Efficiency Curve Slope	<<text (user input)>>
12	Collector Rated Efficiency Curve Intercept	<<text (user input)>>
13	Number of Collectors	<<numeric xx (user input)>>
14	Collector Fluid	<<text (user input)>>
15	Water Heater Storage Volume in gallons	<<numeric xx,xxx (user input)>>
16	Secondary Storage Tank Volume in gallons (If used)	<<numeric xx,xxx (user input)>>
17	Collector angle from true north in degrees	<<text (user input)>>
18	Collector slope form horizontal in degrees	<<text (user input)>>
19	Floor area of building in ft^2	<<numeric xx,xxx (data from certificate of compliance)>>
20	Number of identical dwelling units	<<numeric xxx (data from certificate of compliance)>>
21	Calculated Solar Fraction	<<text (user input)>>

For information and data collection only. Not valid until registered with a HERS provider

FENESTRATION INSTALLATION

CERTIFICATE OF INSTALLATION		CF2R-ENV-01-E
Fenestration Installation		(Page 1 of 2)
Project Name:	Enforcement Agency:	Permit Number:
Dwelling Address:	City	Zip Code

If more than one person has responsibility for installation of the items on this certificate, each person shall prepare and sign a certificate applicable to the portion of construction for which they are responsible. Alternatively, the person with chief responsibility for construction shall prepare and sign this certificate for the entire construction. The signer agrees that all applicable Mandatory Measures were met. Temporary labels are not to be removed before verification by the building inspector.

A. FENESTRATION/GLAZING

Includes all Windows, Skylights, Greenhouse/Bay Windows, Glazed Doors and Skylights

01	02	03	04	05	06	07	08	09
	Installed							
Manufacturer/Brand or Tag/ID	U-factor	SHGC	Area (ft2)	Orientation	Source NFRC, CEC Default	Number of Like Products	Exterior Shading Devices	Comments/ Location/Special Features

Installed window U-factor and SHGC for new construction are the same or better than listed on the CF-1R. For existing buildings the U-factor and SHGC values are the same or better than required by the Energy Commission prescriptive requirements.
Temporary labels were not removed until verified by the building inspector.
The window manufacturer installation instructions were followed when installing these windows.
The space around the window and rough opening is completely filled with insulation. If bat insulation is used it is cut to size and placed into the window.
By signing below, the installer certifies all the requirements above have been followed.

For information and data collection only. Not valid until registered with a HERS provider

CERTIFICATE OF INSTALLATION		CF2R-ENV-01-E
Fenestration Installation		(Page 2 of 2)
Project Name:	Enforcement Agency:	Permit Number:
Dwelling Address:	City	Zip Code

DOCUMENTATION AUTHOR'S DECLARATION STATEMENT

1. I certify that this Certificate of Installation documentation is accurate and complete.

Documentation Author Name:	Documentation Author Signature:
Documentation Author Company Name:	Date Signed:
Address:	CEA/HERS Certification Identification (If applicable):
City/State/Zip:	Phone:

RESPONSIBLE PERSON'S DECLARATION STATEMENT

I certify the following under penalty of perjury, under the laws of the State of California:

1. The information provided on this Certificate of Installation is true and correct.
2. I am eligible under Division 3 of the Business and Professions Code in the applicable classification to accept responsibility for the system design, construction, or installation of features, materials, components, or manufactured devices for the scope of work identified on this Certificate of Installation, and attest to the declarations in this statement (responsible builder/installer), otherwise I am an authorized representative of the responsible builder/installer.
3. The constructed or installed features, materials, components or manufactured devices (the installation) identified on this Certificate of Installation conforms to all applicable codes and regulations, and the installation conforms to the requirements given on the plans and specifications approved by the enforcement agency.
4. I reviewed a copy of the Certificate of Compliance approved by the enforcement agency that identifies the specific requirements for the scope of construction or installation identified on this Certificate of Installation, and I have ensured that the requirements that apply to the construction or installation have been met.
5. I will ensure that a registered copy of this Certificate of Installation shall be posted, or made available with the building permit(s) issued for the building, and made available to the enforcement agency for all applicable inspections. I understand that a registered copy of this Certificate of Installation is required to be included with the documentation the builder provides to the building owner at occupancy.

Responsible Builder/Installer Name:	Responsible Builder/Installer Signature:	
Company Name: (Installing Subcontractor or General Contractor or Builder/Owner)	Position With Company (Title):	
Address:	CSLB License:	
City/State/Zip:	Phone	Date Signed:

For information and data collection only. Not valid until registered with a HERS provider.

Before installation of fenestration the installer shall verify the fenestration product matches either the CF-1R- NCB, or CF-1R-ADD, or CF-1R-ALT or CF-1R-PRF certificate form. If the efficiencies are worse (less efficient) then windows cannot be installed until proof with an updated certificate form or computer energy compliance run documenting the less efficient windows. If the installed fenestration is better (more efficient) that the documentation then no further proof of documentation is required and installation is allowed.

A. FENESTRATION/GLAZING

1. **Manufacturer/Brand or Tag/ID:** Provide the manufacturer and Brand in which identifies the fenestration product being installed. Or if using Tag or ID designator ensure each unique type is used consistently throughout the plan set (elevations, finish schedules, etc.) such as, Window-1, Skylight-1 and etc…to identify each surface. It should also be consistently used on the other forms in the same compliance documentation.

Installed:

2. **U-factor:** Indicate the specified U-factor that is being installed of the same liked fenestration product. Do not mix different types on the same line.
3. **SHGC:** Indicate the specified SHGC that is being installed of the same liked fenestration product. Do not mix different types on the same line.
4. **Surface Area:** Indicate the total surface area ft² of all of the fenestration with the same like characteristics. Do not mix different fenestration area on the same line.
5. **Orientation:** Indicate the orientation of the same like fenestration. If the orientation varies of the same liked fenestration then enter multiple orientation on the same line. Enter S, N, E, or W.

6. **Source**: NFRC or CEC Default Values. Enter the appropriate temporary label certificate identified as either NFRC or CEC Default. All windows installed must have a label certificate in which identifies the window's efficiencies. NFRC Rated products have a temporarily label on the product that can be looked up in the NFRC product directory (http://search.nfrc.org/search/searchDefault.aspx).
7. **Number of Like Products:** Enter the number of the same liked fenestration being installed. Use as many lines as necessary.
8. **Exterior Shading Devices:** If exterior shading devices are installed in conjunction with fenestration then select the type of shading device (sunscreens, louvered, vertical roller or shades or retractable awnings or roll down or slats) or if an overhang is already or going to be installed.
9. **Comments/Location/Special Features:** Locations – Special Features to provide additional information for the field inspector.

For information and data collection only. Not valid until registered with a HERS provider

ENVELOPE AIR SEALING

CERTIFICATE OF INSTALLATION		CF2R-ENV-02-E
Envelope Air Sealing - ENV-02		(Page 1 of 3)
Project Name:	Enforcement Agency:	Permit Number:
Dwelling Address:	City	Zip Code

Note: The Energy Efficiency Standards Section 110.7 requires that "all joints, penetrations and other openings in the building envelope that are potential sources of air leakage shall be caulked, gasketed, weather stripped, or otherwise sealed to limit infiltration and exfiltration." The requirements below are for newly constructed spaces, additions and alterations to existing assemblies. In areas where Spray Foam (SPF) insulation is used, the SPF can be considered the air barrier. Rigid board insulation is also an air barrier as long as infiltration cannot bypass the product. All other forms of insulation are not considered an air barrier and cannot be used as such.

A. Does the scope of this project include (select Yes or No to the following options):		
01	Raised Floor Air Sealing	☐Y or ☐N
02	Wall Air Sealing	☐Y or ☐N
03	Ceiling Air Sealing	☐Y or ☐N
04	Conditioned Space Above or Adjacent to Garage Air Sealing	☐Y or ☐N
05	Cantilevered Floor Air Sealing	☐Y or ☐N
06	Attached porch Roof Air Sealing	☐Y or ☐N
07	Multifamily Air Sealing	☐Y or ☐N

B. RAISED FLOOR AIR SEALING	
01	All gaps in the raised floor are sealed.
02	All chases sealed at floor level using a hard cover and the hard cover is sealed.
03	All Plumbing and electrical wires that penetrate the floor are sealed.
04	Subfloor sheathing is glued or sealed at all exterior panel edges, to create a continuous air tight subfloor
By signing below, the installer certifies that the applicable requirements are met.	

C. WALL AIR SEALING	
01	All penetrations through the exterior wall are sealed to provide an air-tight envelope to unconditioned spaces such as the outdoors, attic, garage and crawl space.
02	Exterior wall air barrier is sealed at the top plate and bottom plate in each stud bay.
03	All electrical boxes including knockouts that penetrate the exterior sheathing to unconditioned space are sealed.
04	All openings in the top and bottom plate, including all interior and exterior walls, to unconditioned space are sealed.
05	Exterior bottom plates (all stories) are sealed to the floor using the appropriate method under the entire exterior bottom plate of the home.
06	All gaps around windows and doors are sealed. Sealant used was specified by window manufacturer.
07	Rim Joist gaps/openings are fully sealed.
08	Fan exhaust ducts that run between conditioned floors to the exterior walls include a damper at the exterior wall.
09	Metal tie downs are insulated between exterior framing and tie down.
10	HVAC boots installed in the walls are sealed to the surrounding drywall.
By signing below, the installer certifies that the applicable requirements are met.	

D. CEILING AIR SEALING	
01	There is a continuous air barrier at the ceiling level. All openings in the ceiling such as into walls, drops, chasses, double walls are sealed.
02	Chimneys and flues have sheet metal flashings. The flashings are sealed to the chimney/flue with fire rated caulk and sealed to surrounding framing.
03	All penetrations through the top plate of interior and exterior walls are sealed.
04	Electrical boxes, fire alarm boxes, fire sprinklers, cut into ceiling are sealed to the surrounding drywall and all gaps in the box are sealed. If not possible to seal fixture directly a secondary barrier was created around the fixture that creates an air tight seal between conditioned and unconditioned spaces.
05	All installed recessed light fixtures that penetrate the ceiling to unconditioned space are rated to be Insulation Contact and air tight (IC and AT) which allows direct contact with insulation. Housing is sealed to the drywall.
06	Exhaust fan housings are sealed to surrounding drywall and all holes and seams in housing sealed.

For information and data collection only. Not valid until registered with a HERS provider

CERTIFICATE OF INSTALLATION		CF2R-ENV-02-E
Envelope Air Sealing - ENV-02		(Page 2 of 3)
Project Name:	Enforcement Agency:	Permit Number:
Dwelling Address:	City	Zip Code

07	All chases are covered with a hard cover that is sealed to framing.
08	Double walls that open to attic are covered and cover is sealed to framing.
09	Attic access forms airtight seal from conditioned space to unconditioned space. Vertical attic access have mechanical compression using screws or latches.
10	Knee walls are air tight: (a) Knee walls have solid blocking at the ceiling level to control air leakage down the wall. Ensure blocking is sealed to framing and drywall. (b) When the knee wall is placed on top of a subfloor the open cavity below the subfloor and the ceiling below are sealed.
11	Soffits are air tight. Either: a hard cover at ceiling level that seals the top plate, or interior of the soffit is air tight. If an interior wall is part of the soffit additional blocking must be added in the wall at the bottom of the soffit.
12	HVAC ducts in a chase are sealed at the ceiling level. Insulation not considered as air barrier (batts) not allowed.
13	HVAC boots that penetrate the ceiling are sealed to the surrounding drywall.
By signing below, the installer certifies that the applicable requirements are met.	

E. CONDITIONED SPACE ABOVE OR ADJACENT TO GARAGE AIR SEALING		
01	All penetration in the subfloor above the garage into conditioned space are installed to meet the raised floor air sealing requirements above.	
02	Air infiltration does not enter the house between the space above the garage and subfloor. Select the option used below:	
03	[Y or N]	(a) Edges are sealed at the garage ceiling (typical drywall) at the perimeter of the garage to create a continuous air tight surface between the garage and adjacent conditioned envelope. Sealed all plumbing, electric and mechanical penetrations between the garage and the adjacent conditioned space. For an open-web truss, airtight blocking is added on four sides of the garage perimeter. Insulation can be placed on the garage ceiling.
04	[Y or No]	(b) Sealed band joist above the wall at the garage to conditioned space transition. Sealed all subfloor seams and penetrations between the conditioned space and the garage. Insulation is placed in contact with subfloor below conditioned space.
By signing below, the installer certifies that the applicable requirements are met.		

F. CANTILEVERED FLOOR AIR SEALING	
01	Airtight blocking is installed between joists where the wall rim joist would have been located in the absence of a cantilever.
02	Exterior sheathing is installed to the bottom of the cantilever so that there is a continuous air and weather barrier for the cantilever. The cantilevered joist must be insulated to the same R-value as would be required for the subfloor prior to closing.
03	Any gaps, cracks or penetrations in the air barrier of the cantilever are sealed. Can lights in the cantilever must be IC and AT rated and properly sealed to sheathing.
By signing below, the installer certifies that the applicable requirements are met.	

G. ATTACHED PORCH/ATTIC AIR SEALING	
01	Exterior wall, air sealant is placed at the intersection of the porch and exterior wall.
02	Truss framing blocking is used at top and bottom of each wall/roof section.
By signing below, the installer certifies that the applicable requirements are met.	

H. MULTIFAMILY AIR SEALING	
01	Multifamily buildings must meet all air sealing requirements listed above.
02	Each dwelling unit must be air sealed to stop air movement from one unit to another.
03	Floor AND Ceiling of each Dwelling Unit: All penetrations through the floor and ceiling of each unit are sealed including, electric and gas utilities, water pipes, drain pipes, fire protection service pipes, communication wiring.
04	Elevator penthouse, mechanical penthouse, stairwell doors, roof access hatch, plumbing stacks sealed to reduce air

For information and data collection only. Not valid until registered with a HERS provider

	transfer from attached spaces.
05	Common Walls: Bottom plate between units is sealed to the subfloor. All penetrations in the common walls are sealed including electrical boxes, wiring and plumbing penetrations. Perpendicular Interior walls that open into the common walls are sealed.
06	Vertical Chases for garbage chutes, elevator shafts, and HVAC ducting plumbing must be sealed to the floor and ceiling of each unit to stop air movement up and around the chase due to stack effect.
07	Vertical Chases for garbage chutes, elevator shafts, and HVAC ducting plumbing, wiring etc. must be sealed to stop air movement through the chase to the surrounding spaces.
08	Common Hallways must be sealed to stop air movement into dwelling units.
By signing below, the installer certifies that the applicable requirements are met.	

DOCUMENTATION AUTHOR'S DECLARATION STATEMENT

1. I certify that this Certificate of Installation documentation is accurate and complete.

Documentation Author Name:	Documentation Author Signature:
Documentation Author Company Name:	Date Signed:
Address:	CEA/HERS Certification Identification (If applicable):
City/State/Zip:	Phone:

RESPONSIBLE PERSON'S DECLARATION STATEMENT

I certify the following under penalty of perjury, under the laws of the State of California:

1. The information provided on this Certificate of Installation is true and correct.
2. I am eligible under Division 3 of the Business and Professions Code in the applicable classification to accept responsibility for the system design, construction, or installation of features, materials, components, or manufactured devices for the scope of work identified on this Certificate of Installation, and attest to the declarations in this statement (responsible builder/installer), otherwise I am an authorized representative of the responsible builder/installer.
3. The constructed or installed features, materials, components or manufactured devices (the installation) identified on this Certificate of Installation conforms to all applicable codes and regulations, and the installation conforms to the requirements given on the plans and specifications approved by the enforcement agency.
4. I reviewed a copy of the Certificate of Compliance approved by the enforcement agency that identifies the specific requirements for the scope of construction or installation identified on this Certificate of Installation, and I have ensured that the requirements that apply to the construction or installation have been met.
5. I will ensure that a registered copy of this Certificate of Installation shall be posted, or made available with the building permit(s) issued for the building, and made available to the enforcement agency for all applicable inspections. I understand that a registered copy of this Certificate of Installation is required to be included with the documentation the builder provides to the building owner at occupancy.

Responsible Builder/Installer Name:	Responsible Builder/Installer Signature:	
Company Name: (Installing Subcontractor or General Contractor or Builder/Owner)	Position With Company (Title):	
Address:	CSLB License:	
City/State/Zip:	Phone	Date Signed:

For information and data collection
Only. Not valid unless registered with a
HERS provider

INSULATION INSTALLATION

CERTIFICATE OF INSTALLATION		CF2R-ENV-03-E
Insulation Installation		(Page 1 of 4)
Project Name:	Enforcement Agency:	Permit Number:
Dwelling Address:	City	Zip Code

If more than one person has responsibility for installation of the items on this certificate, each person shall prepare and sign a certificate applicable to the portion of construction for which they are responsible. Alternatively, the person with chief responsibility for construction shall prepare and sign this certificate for the entire construction. The signer agrees that all applicable Mandatory Measures were met.

Medium and light density SPF manufacturers claim various R-values per inch. In California the maximum R-value that can be claimed for ccSPF is an R-value of 5.8 per inch and for ocSPF is an R-value of 3.6 per inch unless documentation is provided showing that the product and/or manufacturer has a current ICC Evaluation Service Report (ESR) that shows compliance with *Acceptance Criteria for Spray-Applied Foam Plastic Insulation--AC377*.

NOTE: The Energy Efficiency Standards Section 110.7 requires that "all joints, penetrations and other openings in the building envelope that are potential sources of air leakage shall be caulked, gasketed, weather stripped, or otherwise sealed to limit infiltration and exfiltration." In areas where spray Foam (SPF) insulation is used, the SPF can be considered the air barrier. Other than rigid board insulation, all other forms of insulation are not considered as an air barrier.

A. ROOF/CEILING INSULATION

01	02	03	04	05	06	07	08	09	10
I.D	**Manufacturer & Brand**	**Framing Type**	**Framing Size**	**Frame Spacing (inches)**	**Insulation Type**	**Cavity Insulation R-value**	**Insulation Depth (in)**	**Above Deck R-value**	**Below Deck R-value**

B. WALL – INSULATION

01	02	03	04	05	06	07	08	09	10
I.D	**Manufacturer & Brand**	**Framing Material**	**Framing Size**	**Spacing (inches)**	**Insulation Type**	**Cavity Insulation R-value**	**Insulation Depth (in)**	**Exterior Wall R-value**	**Interior Wall R-value**

C. MASS – INSULATION

01	02	03	04	05	06	07	08
I.D	**Manufacturer & Brand**	**Location**	**Mass Thickness (in)**	**Furring Strip Type/ Depth (in)**	**Insulation Type**	**Exterior Insulation R-value**	**Interior Insulation R-value**

D. RAISED FLOOR - INSULATION

01	02	03	04	05	06	07	08	09	10
I.D	**Manufacturer & Brand**	**Framing Material**	**Framing Size**	**Spacing (inches)**	**Insulation Type**	**Cavity Insulation R-value**	**Insulation Depth (in)**	**Exterior Floor R-value**	**Interior Floor R-value**

E. SLAB FLOOR/PERIMETER INSULATION (see F. for insulation requirements for heated slabs)

01	02	03	04	05	06	07	08
I.D	**Manufacturer & Brand**	**Floor type**	**Insulation Type**	**Insulation Depth (inches)**	**Insulation R-Value**	**Vertical Insulation length (in)**	**Horizontal Insulation Length (ft)**

For information and data collection only. Not valid until registered with a HERS provider.

CERTIFICATE OF INSTALLATION		CF2R-ENV-03-E
Insulation Installation		(Page 2 of 4)
Project Name:	Enforcement Agency:	Permit Number:
Dwelling Address:	City	Zip Code

F. HEATED SLABS - INSULATION	
01	All heated slabs shall be insulated as required by Section 110.8(g). Footings must meet required insulation levels.
02	Insulation shall be installed from the top of the slab, down 16 inches or to the frost line, whichever is greater. Climate zones 1-5 requires R-5, climate zone 16 requires R-10.
03	Alternatively, vertical insulation from top of slab at inside edge of outside wall down to the top of the horizontal insulation. Horizontal insulation from the outside edge of the vertical insulation extending 4 feet toward the center of the slab in a direction normal to the outside of the building in plan view. Climate zones 1-5 require R-5, climate zone 16 requires R-10 vertical and R-7 horizontal.
The responsible person's signature on this document indicates that the installed insulation meets both the R-value and the installation criteria specified in Table F HEATED SLAB – INSULATION.	

G. MINIMUM MANDATORY MEASURES	
01	**Insulation** - 110.8(a): All installed Insulation is certified and listed with Department of Consumer Affairs, Standards for Insulating Material.
02	**Insulation** - 110.8(b): Urea formaldehyde foam insulation is protected by 4 mil polyethylene vapor retarder.
03	**Insulation** - 110.8(c): Flame spread and smoke density requirements of CBC are met.
02	**Raised Floor** - 150.0(d): All raised wood-frame floor have a minimum R-19 insulation or equivalent U-factor
03	**Slab Floor/Perimeter** - 150.0(l): Water absorption rate for the insulation material alone without facings is no greater than 0.3%; water vapor permeance rate is no greater than 2.0 perm/inch and is protected from physical damage and UV light deterioration.
04	**Above Grade Exterior Wall** - 150.0(c)1: All 2x4 wood-frame walls have a minimum R-13 insulation or equivalent U-factor.
05	**Above Grade Exterior Wall** - 150.0(c)2: All 2x6 wood-frame walls have a minimum R-19 insulation or equivalent U-factor.
06	**Ceiling/Rafter Roof** - 150.0(a)1: All wood-frame ceiling have a minimum R-30 insulation or equivalent U-factor.
07	**Vapor Retarder** - 150(g)1: Class I or II vapor retarder installed on conditioned space side of insulation in exterior walls, vented attics, and unvented attics with air-impermeable insulation in Climate Zones 14 and 16.
08	**Vapor Retarder** - 150(g)2: Class I or II vapor retarder installed on earth floor of unvented crawlspaces in Climate Zones 1-16.
09	**Vapor Retarder** - 150(g)3: Class I or II vapor retarder installed on earth floor of raised floor buildings with controlled ventilation crawlspaces.
10	**Heated Slabs** - 110.8(g): All heated slabs shall be insulated as required. ▪ Insulation shall be installed from the top of the slab, down 16 inches or to the frost line, whichever is greater. Climate zones 1-5 require R-5, climate zone 16 requires R-10. ▪ Alternatively, vertical insulation from top of slab at inside edge of outside wall down to the top of the horizontal insulation. Horizontal insulation from the outside edge of the vertical insulation extending 4 feet toward the center of the slab in a direction normal to the outside of the building in plan view. Climate zones 1-5 require R-5, climate zone 16 requires R-10 vertical and R-7 horizontal.
The responsible person's signature on this document indicates that the installed insulation meets the minimum requirements specified in Table G – MINIMUM MANDATORY MEASURES.	

H. INSTALLED INSULATION	
01	Installed insulation R-values are the same or greater than listed on the CF1R.
02	No gaps or voids between the insulation and framing.
03	No gaps between the sides or ends of batts.
04	Loose-fill insulation must be installed to the minimum installed weight per square foot (density) of the manufacturer's cut sheet for the proposed R-value.
05	Batt insulation is not compressed (no stuffing of the insulation into the cavity) and is installed to its full thickness.
06	Insulation is cut around obstructions such as electrical boxes.
07	Batt insulation is delaminated around all plumbing and electrical lines in ceilings, walls and floors.
08	Band joists are insulated to the same R-value as the wall.
09	In all narrow cavities the insulation shall be cut to fit or filled with expanding foam.
10	Insulation was installed per manufacturer instructions.
The responsible person's signature on this document indicates that the installed insulation meets the installation criteria specified in Table H – INSTALLED INSULATION.	

For information and data collection only. Not valid until registered with a HERS provider

CERTIFICATE OF INSTALLATION		CF2R-ENV-03-E
Insulation Installation		(Page 3 of 4)
Project Name:	Enforcement Agency:	Permit Number:
Dwelling Address:	City	Zip Code

I. WALL INSULATION	
01	When allowed by manufacturer, Low expanding foam shall be used to fill gaps and voids around windows and doors. If not, the cavity must be air tight and filled completely with insulation. Batts must be cut to width. No stuffing allowed.
02	Installed wall insulation before installing tubs, showers and fireplaces.
03	Electric Panel on walls separating conditioned and nonconditioned space are sealed and insulated behind the panel with rigid insulation or expanding foam.
04	All walls of interior closets vented to the outside for HVAC or water heating equipment have the same R-value and air barrier as the exterior walls and ceiling. Doors are insulated and weather stripped.
05	Ducting not allowed in exterior walls unless insulated to R6 or greater and the insulation and duct are not crushed. Ducting not allowed in 2x4 wall assemblies.
06	Corner channels, wall intersections, and double sided shear walls insulated to the required R-value before enclosing the wall.
07	Insulation that does not fill the cavity placed against exterior air barrier.
08	Band joists are insulated to the same R-value as the walls.
The responsible person's signature on this document indicates that the installed insulation meets the installation criteria specified in Table I – WALL INSULATION.	

J. CEILING/ROOF INSULATION	
01	Insulation extends to the outside edge of the exterior top plates and is flush against any ventilation dams/baffles.
02	Insulation is in direct contact with ceiling, so there are no gaps between the ceiling and the insulation.
03	For chimneys and flues, the insulation is in contact with the sheet metal collar.
04	Can lights are covered with insulation to the same depth as required by the CF1R for ceiling insulation. If not an area weighted calculation is required to be turned in with this form.
05	Walkways and mechanical platforms insulated to the same R-value as required for the ceiling. If not an area weighted calculation is required to be turned in with this form.
06	Insulate a soffit by adding an air barrier and cover with insulation, or insulate the entire soffit including floor and walls.
07	Knee walls and skylight shafts are insulated to the wall R-value and in full contact with the interior air barrier. If framing on these surfaces is laid flat batt insulation is cut to fit around the framing. Batt insulation is not allowed to be draped over the framing.
08	Attic access doors insulated to the same R-value as ceiling. The insulation is permanently attached using adhesive or mechanical fasteners.
09	Attic access must be surrounded with a dam at least the same depth as the insulation to prevent loss of ceiling insulation.
10	Batt insulation cut to fit around cross bracings and truss webs in attic.
The responsible person's signature on this document indicates that the installed insulation meets the installation criteria specified in Table J – CEILING/ROOF INSULATION.	

K. RAISED FLOOR INSULATION	
01	Insulation in full contact with subfloor.
02	Insulation hangers spaced at 18 inches or less, insulation hangers must not compress insulation.
03	If netting or mesh is used, the cavity under the floor is filled and in contact with the subfloor.
04	If the basement is conditioned the walls adjacent to the crawlspace must meet minimum wall R-value requirements. This includes framed stem walls, and vertical concrete retaining walls.
05	If access to the crawl space is from the conditioned area, the raised floor must have an airtight insulated access hatch.
The responsible person's signature on this document indicates that the installed insulation meets the installation criteria specified in Table K – RAISED FLOOR INSULATION.	

L. FLOOR ABOVE GARAGE INSULATION QUALITY	
01	Insulation must be in full contact with subfloor if the air barrier is at the band joist at the garage house wall.
02	Insulation hangers spaced at 18 inches or less, insulation hangers must not compress insulation.
03	If netting or mesh is used, the cavity under the floor is filled and in contact with the subfloor.
04	If air barrier is at the perimeter of the garage, below conditioned subfloor, the insulation is placed on the garage ceiling. Perimeter of subfloor is also insulated.
The responsible person's signature on this document indicates that the installed insulation meets the installation criteria specified in Table L – FLOOR ABOVE GARAGE INSULATION QUALITY.	

For information and data collection only. Not valid until registered with a HERS provider.

CERTIFICATE OF INSTALLATION		CF2R-ENV-03-E
Insulation Installation		(Page 4 of 4)
Project Name:	Enforcement Agency:	Permit Number:
Dwelling Address:	City	Zip Code

M. CANTILEVERED FLOOR INSULATION QUALITY	
01	Insulation in full contact with cantilevered subfloor. Insulation hangers spaced at 18 inches or less, insulation hangers do not compress insulation.
02	If netting or mesh is used, the cavity under the floor is filled and in contact with the subfloor.
03	Sealed Blocking is installed between joists where wall rim joist would be located in the absence of a cantilever. Insulation is placed on both sides of this block.
The responsible person's signature on this document indicates that the installed insulation meets the installation criteria specified in Table M – CANTILEVERED FLOOR INSULATION QUALITY.	

N. ATTACHED PORCH ROOF INSULATION QUALITY	
01	Exterior insulated wall at the intersection of the porch roof is fully insulated above, below and behind the roof line.
02	Where truss framing is used, airtight blocking is at the top and bottom of each wall/roof section and insulated.
The responsible person's signature on this document indicates that the installed insulation meets the installation criteria specified in Table N – ATTACHED PORCH ROOF INSULATION QUALITY.	

DOCUMENTATION AUTHOR'S DECLARATION STATEMENT

1. I certify that this Certificate of Installation documentation is accurate and complete.

Documentation Author Name:	Documentation Author Signature:
Documentation Author Company Name:	Date Signed:
Address:	CEA/HERS Certification Identification (If applicable):
City/State/Zip:	Phone:

RESPONSIBLE PERSON'S DECLARATION STATEMENT

I certify the following under penalty of perjury, under the laws of the State of California:

1. The information provided on this Certificate of Installation is true and correct.
2. I am eligible under Division 3 of the Business and Professions Code in the applicable classification to accept responsibility for the system design, construction, or installation of features, materials, components, or manufactured devices for the scope of work identified on this Certificate of Installation, and attest to the declarations in this statement (responsible builder/installer), otherwise I am an authorized representative of the responsible builder/installer.
3. The constructed or installed features, materials, components or manufactured devices (the installation) identified on this Certificate of Installation conforms to all applicable codes and regulations, and the installation conforms to the requirements given on the plans and specifications approved by the enforcement agency.
4. I reviewed a copy of the Certificate of Compliance approved by the enforcement agency that identifies the specific requirements for the scope of construction or installation identified on this Certificate of Installation, and I have ensured that the requirements that apply to the construction or installation have been met.
5. I will ensure that a registered copy of this Certificate of Installation shall be posted, or made available with the building permit(s) issued for the building, and made available to the enforcement agency for all applicable inspections. I understand that a registered copy of this Certificate of Installation is required to be included with the documentation the builder provides to the building owner at occupancy.

Responsible Builder/Installer Name:	Responsible Builder/Installer Signature:	
Company Name: (Installing Subcontractor or General Contractor or Builder/Owner)	Position With Company (Title):	
Address:	CSLB License:	
City/State/Zip:	Phone	Date Signed:

For information and data collection only. Not valid until registered with a HERS provider

Instructions for ENV03

A. ROOF/CEILING INSULATION

1. I.D: A label from the plans, such as A1.4 or Roof documenting installed insulation.
2. Manufacturer and Brand: indicate the Manufacturer and brand of product being installed.
3. Framing Type: Wood or Metal.
4. Frame Size: indicate the frame type such as 2x4 or 2x6.
5. Frame Spacing: 16 or 24 (inches on center).
6. Insulation Type: List the type of insulation used such as Batt, Loose Fill, SPF.
7. Cavity Insulation R-value: indicate the cavity insulation R-value.
8. Insulation Depth: Indicate in inches the amount of insulation installed.
9. Above Deck R-Value: Indicate the R-value of the continuous insulation being installed above the roof deck that has no framing penetration.
10. Below Deck R-Value: Indicate the R-value of the continuous insulation being installed below the roof deck that has no framing penetration.

B. WALL-INSULATION

1. I.D: A label from the plans, such as A1.4 or Wall1 documenting installed insulation.
2. Manufacturer and Brand: indicate the Manufacturer and brand of product being installed.
3. Framing Material: Wood or Metal.
4. Frame Size: indicate the frame type such as 2x4 or 2x6.
5. Frame Spacing: 16 or 24 (inches on center) for SIPs indicate n/a.
6. Insulation Type: List the type of insulation used such as Batt, Loose Fill, SPF.
7. Cavity Insulation R-value: indicate the cavity insulation R-value.
8. Insulation Depth: Indicate in inches the amount of insulation installed.
9. Exterior Wall R-Value: Indicate the R-value of the continuous insulation being installed on the outside of the wall with no framing penetration.
10. Interior Wall R-Value: Indicate the R-value of the continuous insulation being installed on the inside of the wall with no framing penetration.

C. MASS – INSULATION

1. I.D: A label from the plans, such as A1.4 or Wall1 documenting installed insulation.
2. Manufacturer and Brand: indicate the Manufacturer and brand of product being installed.
3. Location: Indicate the location of the insulation such as above grade, below grade, Wall or roof.
4. Mass Thickness: In inches indicate the thickness of the mass the insulation is being applied to.
5. Furring Strip Type/Depth: Indicate the type for furring material and it thickness being installed such as Wood 1.0 inch thick.
6. Insulation Type: List the type of insulation used such as SPF, EPS or EPDM.
7. Exterior Insulation R-Value: Indicate the R-value of the continuous insulation being installed on the outside of the assembly with no framing penetration.
8. Interior Insulation R-Value: Indicate the R-value of the continuous insulation being installed on the inside of the assembly with no framing penetration.

D. RAISED FLOOR-INSULATION

1. I.D: A label from the plans, such as A1.4 or Floor1 documenting installed insulation.
2. Manufacturer and Brand: Indicate the Manufacturer and brand of product being installed.
3. Framing Material: Wood or Metal.
4. Frame Size: indicate the frame type such as 2x4 or 2x6.
5. Frame Spacing O.C: 16 or 24 (inches on center) for SIPs indicate n/a.
6. Insulation Type: List the type of insulation used such as Batt, Loose Fill, SPF.
7. Cavity Insulation R-value: indicate the cavity insulation R-value.
8. Insulation Depth: Indicate in inches the amount of insulation installed.
9. Exterior Floor R-Value: Indicate the R-value of the continuous insulation being installed on the outside of the floor with no framing penetration.
10. Interior floor R-Value: Indicate the R-value of the continuous insulation being installed on the inside of the floor with no framing penetration.

For information and data collection only. Not valid until registered with a HERS Provider

E. SLAB FLOOR/PERIMETER INSULATION

1. I.D: A label from the plans, such as A1.4 or Slab Floor1 documenting installed insulation.
2. Manufacturer and Brand: Indicate the Manufacturer and brand of product being installed.
3. Floor Type: Indicate the floor type the insulation is being applied to such as Heated Slab or Slab on Grade.
4. Insulation Type: List the type of insulation used such as EPDM, Polyisocyanurate or Polystyrene.
5. Insulation Thickness: Indicate in inches the thickness of insulation installed.
6. Insulation R-Value: Indicate the insulation R-value being installed on the vertical and horizontal.
7. Vertical Insulation Length: Indicate in inches the length of the insulation being installed.
8. Horizontal Insulation Length: Indicate the in feet the length of the insulation being installed from the outside edge of the vertical insulation to the center of the slab.

For information and data collection only. Not valid until registered with a HERS provider

CERTIFICATE OF INSTALLATION		CF2R-ENV-04-E
Roofing-Radiant Barrier		(Page 1 of 2)
Project Name:	Enforcement Agency:	Permit Number:
Dwelling Address:	City	Zip Code

If more than one person has responsibility for installation of the items on this certificate, each person shall prepare and sign a certificate applicable to the portion of construction for which they are responsible. Alternatively, the person with chief responsibility for construction shall prepare and sign this certificate for the entire construction. The signer agrees that all applicable Mandatory Measures were met. Temporary labels are not to be removed before verification by the building inspector.

A. RADIANT BARRIER

		Ventilation Requirements (when installing Radiant Barrier)		
1	2	3	4	5
Brand Name	**Installation Type**	**Total Attic Area (ft^2)**	**Required Total Net Free Area Attic Ventilation (in^2)**	**Minimum Upper Vent Net Free Area (in^2)**

NOTE: Radiant barrier must be installed on gable ends and all other vertical surfaces in the attic.
When determining the Total Attic Area the attic area over nonconditioned spaces (ex garage) must be included when the attic over the conditioned and nonconditioned space are connected. For example a one story house with an attached garage the garage attic area must be included.
Minimum Upper Vent must not be greater than 50% of the Total Net Free Area
Upper Vents must be within one foot of the ridge. Lower vents to be within one foot of the Eave.
Emittance of the radiant barrier shall be less than or equal to 0.05 as tested with ASTM C1371, or E408.

Installed Type of **Lower** Vent_____ Type of **Upper** Vent_____

Installed Net Free Area (NFA)

Upper vents = _____ in2 X _____ = _____ in2 (_____)
(**NFA** per vent) (quantity) (total **NFA**) (Req. NFA from above)

Lower vents = _____ in2 X _____ = _____ in2 (_____)
(**NFA** per vent) (quantity) (total **NFA**) (Req. NFA from above)

NOTE: The Net Free Area of a product is usually one half to one third of the open area. For example 2" round vent the open area is 3.14 in2 and the net free area is 1.1 in2. A 22" x 3" eave vent will have an open area of 81 in2 and the net free area is 39 in2.

For information and data collection only. Not valid until registered with a HERS provider

CERTIFICATE OF INSTALLATION		CF2R-ENV-04-E
Roofing-Radiant Barrier		(Page 2 of 2)
Project Name:	Enforcement Agency:	Permit Number:
Dwelling Address:	City	Zip Code

DOCUMENTATION AUTHOR'S DECLARATION STATEMENT	
1. I certify that this Certificate of Installation documentation is accurate and complete.	
Documentation Author Name:	Documentation Author Signature:
Documentation Author Company Name:	Date Signed:
Address:	CEA/HERS Certification Identification (If applicable):
City/State/Zip:	Phone:

RESPONSIBLE PERSON'S DECLARATION STATEMENT

I certify the following under penalty of perjury, under the laws of the State of California:

1. The information provided on this Certificate of Installation is true and correct.
2. I am eligible under Division 3 of the Business and Professions Code in the applicable classification to accept responsibility for the system design, construction, or installation of features, materials, components, or manufactured devices for the scope of work identified on this Certificate of Installation, and attest to the declarations in this statement (responsible builder/installer), otherwise I am an authorized representative of the responsible builder/installer.
3. The constructed or installed features, materials, components or manufactured devices (the installation) identified on this Certificate of Installation conforms to all applicable codes and regulations, and the installation conforms to the requirements given on the plans and specifications approved by the enforcement agency.
4. I reviewed a copy of the Certificate of Compliance approved by the enforcement agency that identifies the specific requirements for the scope of construction or installation identified on this Certificate of Installation, and I have ensured that the requirements that apply to the construction or installation have been met.
5. I will ensure that a registered copy of this Certificate of Installation shall be posted, or made available with the building permit(s) issued for the building, and made available to the enforcement agency for all applicable inspections. I understand that a registered copy of this Certificate of Installation is required to be included with the documentation the builder provides to the building owner at occupancy.

Responsible Builder/Installer Name:	Responsible Builder/Installer Signature:	
Company Name: (Installing Subcontractor or General Contractor or Builder/Owner)	Position With Company (Title):	
Address:	CSLB License:	
City/State/Zip:	Phone	Date Signed:

For information and data collection only. Not valid until registered with a HERS provider

Instruction

A. Radiant Barrier

1. Indicate the brand name of the product being used.
2. Indicate the installation types are: (1) attached to underside of roof deck, (2) attached to bottom of truss/rafters, (3) attached between truss/rafters, or (4) draped over top of truss/rafters

Ventilation Requirements When radiant barrier is installed there is a requirement for attic ventilation.

3. Provide the total attic area over conditioned space: ft^2.
4. Calculate the total attic ventilation area: [(Col. 3 x 144)/300] = Col. 4 in^2
5. Calculate the minimum upper vent area: (Col. 4 x 0.30) = Col. 5 in^2

For information and data collection only. Not valid until registered with a HERS provider

BUILDING LEAKAGE DIAGNOSTIC TEST

CERTIFICATE OF INSTALLATION		CF2R-ENV-20-H
Building Leakage Diagnostic Test		(Page 1 of 2)
Project Name:	Enforcement Agency:	Permit Number:
Dwelling Address:	City	Zip Code

A. Building Air Leakage – General Information		
01	Test Procedure Used:	
02	Building Air Leakage Target from CF-1R	
03	Indoor Temperature During Test (degreeF)	
04	Outdoor Temperature During Test (degreeF)	
05	Blower Door Location	
06	Building Elevation (ft)	
07	Building Volume (ft3)	
08	Date of the Diagnostic Test for this Dwelling	

B. Diagnostic Equipment Information		
01	Number of Fans Used to Pressurize Home	
02	Fan #1	
03	Manometer Make	
04	Manometer Model	
05	Manometer Serial Number	
06	Manometer Calibration Date	
07	Manometer Calibration Status	
08	Fan Make	
09	Fan Model	
10	Fan Serial Number	

C. Envelope Leakage Diagnostic Test - ENV20a - Single Point Air Tightness Test With Manual Meter		
01	Time average period of meter	
02	Average Baseline Building Pressure Reading #1	
03	Average Baseline Building Pressure Reading #2	
04	Average Baseline Building Pressure Reading #3	
05	Average Baseline Building Pressure Reading #4	
06	Average Baseline Building Pressure Reading #5	
07	Baseline Range	
08	Accuracy Level	
09	Average Baseline Building Pressure Reading	
10	Pre-test baseline building pressure	
11	Unadjusted Building Pressure Target	
12	Unadjusted Building Pressure Measured	
13	Induced building pressure	
14	Nominal Fan flow at above fan pressure	
15	Fan configuration (rings)	
16	Nominal CFM50	

D. Altitude and Temperature Correction		
01	Altitude correction factor	
02	Temperature correction factor	
03	Corrected CFM50	

E. Accuracy Adjustment		
01	Extending factor	
02	Adjusted CFM50 (measured air leakage rate)	

F. Compliance Statement

For information and data collection only. Not valid until registered with a HERS provider

CERTIFICATE OF INSTALLATION		CF2R-ENV-20-H
Building Leakage Diagnostic Test		(Page 2 of 2)
Project Name:	Enforcement Agency:	Permit Number:
Dwelling Address:	City	Zip Code

G. Additional Requirements For Compliance	
The responsible persons signature on this document indicates that the following was completed before a blower-door test began:	
01	Open all interior doors and access including those to closets and those between a conditioned basement and attic.
02	HVAC Supply and return register dampers shall be fully open.
03	Temporarily sealing of combustion flues and intermittent exhaust fans are not allowed. Some examples are: combustion flues, fresh air intakes, dryer vents, bathroom and kitchen exhaust vents and fire place.
04	Continuously operated ventilation devices like energy recovery ventilators may be sealed.
05	Multifamily – Each dwelling unit must be tested individually and shown to meet the leakage requirements. Pressurization of the adjacent dwelling units while conducting this test is not allowed.

DOCUMENTATION AUTHOR'S DECLARATION STATEMENT

1. I certify that this Certificate of Installation documentation is accurate and complete.

Documentation Author Name:	Documentation Author Signature:
Documentation Author Company Name:	Date Signed:
Address:	CEA/HERS Certification Identification (If applicable):
City/State/Zip:	Phone:

RESPONSIBLE PERSON'S DECLARATION STATEMENT

I certify the following under penalty of perjury, under the laws of the State of California:

1. The information provided on this Certificate of Installation is true and correct.
2. I am eligible under Division 3 of the Business and Professions Code in the applicable classification to accept responsibility for the system design, construction, or installation of features, materials, components, or manufactured devices for the scope of work identified on this Certificate of Installation and attest to the declarations in this statement (responsible builder/installer), otherwise I am an authorized representative of the responsible builder/installer.
3. The constructed or installed features, materials, components or manufactured devices (the installation) identified on this Certificate of Installation conforms to all applicable codes and regulations, and the installation conforms to the requirements given on the plans and specifications approved by the enforcement agency.
4. I understand that a HERS rater will check the installation to verify compliance, and that if such checking identifies defects; I am required to take corrective action at my expense. I understand that Energy Commission and HERS Provider representatives will also perform quality assurance checking of installations, including those approved as part of a sample group but not checked by a HERS rater, and if those installations fail to meet the requirements of such quality assurance checking, the required corrective action and additional checking/testing of other installations in that HERS sample group will be performed at my expense.
5. I reviewed a copy of the Certificate of Compliance approved by the enforcement agency that identifies the specific requirements for the scope of construction or installation identified on this Certificate of Installation, and I have ensured that the requirements that apply to the construction or installation have been met.
6. I will ensure that a registered copy of this Certificate of Installation shall be posted, or made available with the building permit(s) issued for the building, and made available to the enforcement agency for all applicable inspections. I understand that a registered copy of this Certificate of Installation is required to be included with the documentation the builder provides to the building owner at occupancy.

Responsible Builder/Installer Name:	Responsible Builder/Installer Signature:	
Company Name: (Installing Subcontractor or General Contractor or Builder/Owner)	Position With Company (Title):	
Address:	CSLB License:	
City/State/Zip:	Phone	Date Signed:
Third Party Quality Control Program (TPQCP) Status:	Name of TPQCP (if applicable):	

For information and data collection only. Must be registered with a HERS provider

Instructions for ENV20

Section A. Building Air Leakage – General Information

1. Select the appropriate test procedure. This selection will determine which version of this document will be used (a, b, c, d, or e) and therefore which data must be collected. Note that single-point tests can only be used under certain conditions. Note that newer manometers have automatic functions for compensating for baseline (automatic baseline) and compensating for house pressures other than the target (@50 Pa). It is preferable to use these, when available, however if these automatic functions are to be used, they must be used for BOTH automatic baseline and pressure compensation.
2. This number is automatically pulled from the performance approach Certificate of Compliance and is the target maximum that was entered by the documentation author. If this number cannot be achieved, the performance compliance calculations can be redone with a higher number or without the requirement for building air leakage.
3. Enter the indoor temperature measured at the time that the building air leakage test was performed.
4. Enter the outdoor temperature measured at the time that the building air leakage test was performed.
5. Provide a brief description of the location where the blower door was installed for the test. Examples: "front entry door on west side of house", "door between house and garage", "large window in family room".
6. Enter the building elevation use the value for the closest city found in Joint Appendix JA2.2. Only elevations higher than 5000 feet require an adjustment to the calculations.
7. This number is automatically pulled from the performance approach Certificate of Compliance. It is used to calculate air changes.
8. Enter the date that the building leakage test data was collected.

Section B. Diagnostic Equipment Information

1. Enter the number of blower door fan systems required to run simultaneously to pressurize the home for the building air leakage test. If more than one system is used, the fan flow numbers need to be manually added together, unless blower door software is used that will accommodate multiple fan systems running simultaneously.
2. Enter the appropriate information for each fan system used in the following rows.
3. Enter the make (brand) of the manometer used to collect the building air leakage data. Examples: Retrotec, Energy Conservatory.
4. Enter the model of the manometer used to collect the building air leakage data. Examples: DM-2 Mark II, DG700.
5. Enter the serial number of the manometer used to collect the building air leakage data.
6. Enter the most recent date that the manometer was calibrated by following manufacturer's calibration specifications.
7. This field is automatically filled. If the calibration date was more than 12 months prior to the test date entered in Row A.8, above, an error will appear.
8. Enter the make (brand) of the fan used to collect the building air leakage data. Examples: Retrotec, Energy Conservatory.
9. Enter the model of the fan used to collect the building air leakage data. Examples: US1000, Q46, BD3, BD4.

Section C. Envelope Leakage Test (ENV20a)

1. Enter the time average period used on the manometer during the test. Must be at least 10 seconds.
2. Enter the first of five baseline building pressure readings.
3. Enter the second of five baseline building pressure readings.
4. Enter the third of five baseline building pressure readings.
5. Enter the fourth of five baseline building pressure readings.
6. Enter the fifth of five baseline building pressure readings.
7. This field is automatically calculated when using the online form. The equation used to calculate this value in the field equals [Largest value of (C. 2 through C. 6)] –[smallest value of (C. 2 through C. 6)] = Baseline Range
8. This field is automatically calculated when using the online form. The values entered the field C. 8 equals a. if row C. 7 > 5.0, enter "Standard"; b. if row C. 7 ≥ 5 and ≤ 10, enter "Reduced"; c. if row C. 7 > 10, "**cannot use single-point test", do not proceed**.
9. This field is automatically calculated when using the online form. The equation used to calculate this value in the field equals (C.2+ C.3+ C.4+ C.5+ C.6)/5 = Average Baseline Building Pressure Reading
10. Enter the pre-test baseline building pressure. The protocols allow the average from Row C.9 or a newly measured number to be used.
11. This field is automatically calculated when using the online form. The equation used to calculate this value in the field equals -50pa – C.9 = Pre-test building pressure
12. Enter the measured unadjusted building pressure straight from the manometer. It should be as close to the target from Row C.11 as possible. Note that the protocols require depressurization of the envelope. All blower door induced pressures are to be negative relative to outside.
13. This field is automatically calculated when using the online form. The equation used to calculate this value in the field equals Row C.12 – C.9 = Induced Building pressure.
14. Enter the fan flow from the manometer that corresponds to the measured unadjusted building pressure from Row C.12.
15. Enter the fan configuration (rings) that was used during the data acquisition. Examples: Ring A, Ring A1
16. This field is automatically calculated when using the online form. The equation used to calculate this value in the field equals (50/Row C.13)^0.65 x row C. 14 = Nominal CFM50

For information and data collection only. Not valid until registered with a HERS provider

Section D. Altitude and Temperature Correction

1. This field is automatically calculated when using the online form. The equation used to calculate this value in the field equals:
   a. If the elevation entered in Row A.6 ≤ 5,000 ft, then enter 1 as altitude correction in box D. 1
   b. If the elevation entered in Row A.6 > 5,000 ft, altitude correction equation equals 1 + (0.000006 * A.6)
2. Enter the temperature correction factor from Table RA3.8-2 or RA3.8-3 using the indoor and outdoor temperatures entered in Rows A.3 and A.4.

Table RA3.8-2 ***Temperature Correction Factors for Depressurization Testing****- Calculated according to ASTM E779-10*

		Inside Temperature (F)								
		50	**55**	**60**	**65**	**70**	**75**	**80**	**85**	**90**
Outside Temp (F)	**-20**	1.062	1.072	1.081	1.090	1.099	1.108	1.117	1.127	1.136
	-15	1.056	1.066	1.075	1.084	1.093	1.102	1.111	1.120	1.129
	-10	1.051	1.060	1.069	1.078	1.087	1.096	1.105	1.114	1.123
	-5	1.045	1.054	1.063	1.072	1.081	1.090	1.099	1.108	1.117
	0	1.039	1.048	1.057	1.066	1.075	1.084	1.093	1.102	1.111
	5	1.033	1.042	1.051	1.060	1.069	1.078	1.087	1.096	1.105
	10	1.028	1.037	1.046	1.055	1.064	1.072	1.081	1.090	1.099
	15	1.023	1.031	1.040	1.049	1.058	1.067	1.076	1.084	1.093
	20	1.017	1.026	1.035	1.044	1.052	1.061	1.070	1.079	1.087
	25	1.012	1.021	1.029	1.038	1.047	1.056	1.064	1.073	1.082
	30	1.007	1.015	1.024	1.033	1.041	1.050	1.059	1.067	1.076
	35	1.002	1.010	1.019	1.028	1.036	1.045	1.054	1.062	1.071
	40	0.997	1.005	1.014	1.023	1.031	1.040	1.048	1.057	1.065
	45	0.992	1.000	1.009	1.017	1.026	1.035	1.043	1.051	1.060
	50	0.987	0.995	1.004	1.012	1.021	1.029	1.038	1.046	1.055
	55	0.982	0.990	0.999	1.008	1.016	1.024	1.033	1.041	1.050
	60	0.997	0.986	0.994	1.003	1.011	1.019	1.028	1.036	1.045
	65	0.973	0.981	0.989	0.998	1.006	1.015	1.023	1.031	1.040
	70	0.968	0.976	0.985	0.993	1.001	1.010	1.018	1.026	1.035
	75	0.963	0.972	0.980	0.988	0.997	1.005	1.013	1.022	1.030
	80	0.959	0.967	0.976	0.984	0.992	1.000	1.009	1.017	1.025
	85	0.955	0.963	0.971	0.979	0.988	0.996	1.004	1.012	1.020
	90	0.950	0.958	0.967	0.975	0.983	0.991	0.999	1.008	1.016
	95	0.946	0.954	0.962	0.970	0.979	0.987	0.995	1.003	1.011
	100	0.942	0.950	0.958	0.966	0.970	0.982	0.990	0.998	1.007
	105	0.938	0.946	0.954	0.962	0.970	0.978	0.986	0.994	1.002
	110	0.933	0.942	0.950	0.952	0.966	0.974	0.982	0.990	0.998

Table RA3.8-3 ***Temperature Correction Factors for Pressurization Testing****- Calculated according to ASTM E779-10*

		Inside Temperature (F)								
		50	**55**	**60**	**65**	**70**	**75**	**80**	**85**	**90**
Outside Temp (F)	**-20**	0.865	0.861	0.857	0.853	0.849	0.845	0.841	0.837	0.833
	-15	0.874	0.870	0.866	0.862	0.858	0.854	0.850	0.846	0.842
	-10	0.883	0.879	0.874	0.870	0.866	0.862	0.858	0.854	0.850
	-5	0.892	0.887	0.883	0.879	0.875	0.871	0.867	0.863	0.859
	0	0.900	0.896	0.892	0.887	0.883	0.879	0.875	0.871	0.867
	5	0.909	0.905	0.900	0.896	0.892	0.888	0.883	0.879	0.875
	10	0.918	0.913	0.909	0.905	0.900	0.896	0.892	0.888	0.884
	15	0.927	0.922	0.918	0.913	0.909	0.905	0.900	0.896	0.892
	20	0.935	0.931	0.926	0.922	09.17	0.913	0.909	0.905	0.900
	25	0.944	0.939	0.935	0.930	0.926	0.922	0.917	0.913	0.909
	30	0.952	0.948	0.943	0.939	0.934	0.930	0.926	0.921	0.917
	35	0.961	0.956	0.952	0.947	0.943	0.938	0.934	0.930	0.926
	40	0.970	0.965	0.960	0.956	0.951	0.947	0.942	0.938	0.934
	45	0.978	0.974	0.961	0.964	0.960	0.955	0.951	0.946	0.942
	50	0.987	0.982	0.977	0.973	0.968	0.963	0.959	0.955	0.950
	55	0.995	0.990	0.986	0.981	0.976	0.972	0.967	0.963	0.958
	60	1.004	0.999	0.994	0.998	0.985	0.980	0.976	0.971	0.967
	65	1.012	1.008	1.003	0.998	0.993	0.988	0.984	0.979	0.975
	70	1.021	1.016	1.011	1.006	1.001	0.997	0.992	0.988	0.983
	75	1.029	1.024	1.019	1.015	1.010	1.005	1.000	0.996	0.991
	80	1.038	1.033	1.028	1.023	1.018	1.013	1.009	1.004	0.999
	85	1.046	1.041	1.036	1.031	1.026	1.022	1.017	1.012	1.008
	90	1.055	1.050	1.045	1.040	1.035	1.030	1.025	1.020	1.016
	95	1.063	1.058	1.053	1.048	1.043	1.038	1.033	1.028	1.024
	100	1.072	1.066	1.061	1.056	1.051	1.046	1.041	1.037	1.032
	105	1.080	1.075	1.070	1.064	1.059	1.054	1.050	1.045	1.040
	110	1.088	1.083	1.078	1.073	1.068	1.063	1.058	1.053	1.048

For informational only. Not valid until signed with a HERS Pro license

3. This field is automatically calculated when using the online form. The equation used to calculate this value in the field equals the product of D.1 * D.2 * C.16.

Section E. Accuracy Adjustment

1. This field is automatically calculated when using the online form. The equation used to calculate this value in the field equals:
    c. If the accuracy level C.8 = Standard, then enter 1 as accuracy adjustment in box E. 1
    d. If the accuracy level C.8 = Reduced, accuracy adjustment equation equals 1+[0.1+(50/C. 14)]
2. This field is automatically calculated when using the online form. The equation used to calculate this value in the field equals the D.3 * E.1. = Adjusted CFM50 **Note -** This is the number that must be less than or equal to the target building air leakage from the CF-1R, shown in Row A.2.

For information and data collection only. Not valid until registered with a HERS provider

BUILDING LEAKAGE DIAGNOSTIC TEST

CERTIFICATE OF INSTALLATION		CF2R-ENV-20-H
Building Leakage Diagnostic Test		(Page 1 of 3)
Project Name:	Enforcement Agency:	Permit Number:
Dwelling Address:	City	Zip Code

A. Building Air Leakage – General Information		
01	Test Procedure Used:	
02	Building Air Leakage Target from CF-1R	
03	Indoor temperature during test (degreeF)	
04	Outdoor temperature during test (degreeF)	
05	Blower door location	
06	Building Elevation (ft)	
07	Building Volume (ft3)	
08	Date of the diagnostic test for this dwelling	

B. Diagnostic Equipment Information		
01	Number of Fans Used to Pressurize Home	
02	Fan #1	
03	Manometer Make	
04	Manometer Model	
05	Manometer Serial Number	
06	Manometer Calibration Date	
07	Manometer Calibration Status	
08	Fan Make	
09	Fan Model	
10	Fan Serial Number	

C. Envelope Leakage Diagnostic Test - ENV20b - Single Point Air Tightness Test With Automatic Meter		
01	Time average period of meter	
02	Baseline Building Pressure Reading #1	
03	Baseline Building Pressure Reading #2	
04	Baseline Building Pressure Reading #3	
05	Baseline Building Pressure Reading #4	
06	Baseline Building Pressure Reading #5	
07	Baseline Range	
08	Accuracy Level	
09	Average Baseline Building Pressure Reading	
10	Pre-test baseline building pressure	
11	Induced building pressure, Target=-50 Pa	
12	Nominal CFM50	

D. Altitude and Temperature Correction		
01	Altitude correction factor	
02	Temperature correction factor	
03	Corrected CFM50	

E. Accuracy Adjustment		
01	Extending factor	
02	Adjusted CFM50 (measured air leakage rate)	

For information and data collection only. Not valid until registered with a HERS provider

CERTIFICATE OF INSTALLATION		CF2R-ENV-20-H
Building Leakage Diagnostic Test		(Page 2 of 3)
Project Name:	Enforcement Agency:	Permit Number:
Dwelling Address:	City	Zip Code

F. Compliance Statement
<< if manometer Calibration Date in B. 6 is within 12 months of the date of the diagnostic test A. 8 and if Adjusted CFM50 Leakage in E. 2 is less than or equal to the Building Air Leakage Rate Target in A. 2 then display text: "Building Passes Envelope Leakage Test"; if manometer Calibration Date in B. 6 is more than 12 months from the date of the diagnostic test A. 8 or if Adjusted CFM50 Leakage in E. 2 is more than the Building Air Leakage Rate Target in A. 2 then display text: "Building Fails Envelope Leakage Test">>

G. Additional Requirements For Compliance	
The responsible persons signature on this document indicates that the following was completed before a blower-door test began:	
01	Open all interior doors and access including those to closets and those between a conditioned basement and attic.
02	HVAC Supply and return register dampers shall be fully open.
03	Temporarily sealing of combustion flues and intermittent exhaust fans are not allowed. Some examples are: combustion flues, fresh air intakes, dryer vents, bathroom and kitchen exhaust vents and fire place.
04	Continuously operated ventilation devices like energy recovery ventilators may be sealed.
05	Multifamily – Each dwelling unit must be tested individually and shown to meet the leakage requirements. Pressurization of the adjacent dwelling units while conducting this test is not allowed.

For information and data collec
only. Not valid until registered with
HERS provider

CERTIFICATE OF INSTALLATION		CF2R-ENV-20-H
Building Leakage Diagnostic Test		(Page 3 of 3)
Project Name:	Enforcement Agency:	Permit Number:
Dwelling Address:	City	Zip Code

DOCUMENTATION AUTHOR'S DECLARATION STATEMENT

1. I certify that this Certificate of Installation documentation is accurate and complete.

Documentation Author Name:	Documentation Author Signature:
Documentation Author Company Name:	Date Signed:
Address:	CEA/HERS Certification Identification (If applicable):
City/State/Zip:	Phone:

RESPONSIBLE PERSON'S DECLARATION STATEMENT

I certify the following under penalty of perjury, under the laws of the State of California:

1. The information provided on this Certificate of Installation is true and correct.
2. I am eligible under Division 3 of the Business and Professions Code in the applicable classification to accept responsibility for the system design, construction, or installation of features, materials, components, or manufactured devices for the scope of work identified on this Certificate of Installation and attest to the declarations in this statement (responsible builder/installer), otherwise I am an authorized representative of the responsible builder/installer.
3. The constructed or installed features, materials, components or manufactured devices (the installation) identified on this Certificate of Installation conforms to all applicable codes and regulations, and the installation conforms to the requirements given on the plans and specifications approved by the enforcement agency.
4. I understand that a HERS rater will check the installation to verify compliance, and that if such checking identifies defects; I am required to take corrective action at my expense. I understand that Energy Commission and HERS Provider representatives will also perform quality assurance checking of installations, including those approved as part of a sample group but not checked by a HERS rater, and if those installations fail to meet the requirements of such quality assurance checking, the required corrective action and additional checking/testing of other installations in that HERS sample group will be performed at my expense.
5. I reviewed a copy of the Certificate of Compliance approved by the enforcement agency that identifies the specific requirements for the scope of construction or installation identified on this Certificate of Installation, and I have ensured that the requirements that apply to the construction or installation have been met.
6. I will ensure that a registered copy of this Certificate of Installation shall be posted, or made available with the building permit(s) issued for the building, and made available to the enforcement agency for all applicable inspections. I understand that a registered copy of this Certificate of Installation is required to be included with the documentation the builder provides to the building owner at occupancy.

Responsible Builder/Installer Name:	Responsible Builder/Installer Signature:	
Company Name: (Installing Subcontractor or General Contractor or Builder/Owner)	Position With Company (Title):	
Address:	CSLB License:	
City/State/Zip:	Phone	Date Signed:
Third Party Quality Control Program (TPQCP) Status:	Name of TPQCP (if applicable):	

For information and data collection only. Not valid until registered with a HERS provider

Instructions for ENV20b

Section A. Building Air Leakage – General Information

1. Select the appropriate test procedure. This selection will determine which version of this document will be used (a, b, c, d, or e) and therefore which data must be collected. Note that single-point tests can only be used under certain conditions. Note that newer manometers have automatic functions for compensating for baseline (automatic baseline) and compensating for house pressures other than the target (@50 Pa). It is preferable to use these, when available, however if these automatic functions are to be used, they must BOTH be used.
2. This number is automatically pulled from the performance approach Certificate of Compliance and is the target maximum that was entered by the documentation author. If this number cannot be achieved, the performance compliance calculations can be redone with a higher number or without the requirement for building air leakage.
3. Enter the indoor temperature measured at the time that the building air leakage test was performed.
4. Enter the outdoor temperature measured at the time that the building air leakage test was performed.
5. Provide a brief description of the location where the blower door was installed for the test. Examples: "front entry door on west side of house", "door between house and garage", "large window in family room".
6. Enter the building elevation use the value for the closest city found in Joint Appendix JA2.2. Only elevations higher than 5000 feet require an adjustment to the calculations.
7. This number is automatically pulled from the performance approach Certificate of Compliance. It is used to calculate air changes.
8. Enter the date that the building leakage test data was collected.

Section B. Diagnostic Equipment Information

1. Enter the number of blower door fan systems required to run simultaneously to pressurize the home for the building air leakage test. If more than one system is used, the fan flow numbers need to be manually added together, unless blower door software is used that will accommodate multiple fan systems running simultaneously.
2. Enter the appropriate information for each fan system used in the following rows.
3. Enter the make (brand) of the manometer used to collect the building air leakage data. Examples: Retrotec, Energy Conservatory.
4. Enter the model of the manometer used to collect the building air leakage data. Examples: DM-2 Mark II, DG700.
5. Enter the serial number of the manometer used to collect the building air leakage data.
6. Enter the most recent date that the manometer was calibrated by following manufacturer's calibration specifications.
7. This field is automatically filled. If the calibration date was more than 12 months prior to the test date entered in Row A.8, above, an error will appear.
8. Enter the make (brand) of the fan used to collect the building air leakage data. Examples: Retrotec, Energy Conservatory.
9. Enter the model of the fan used to collect the building air leakage data. Examples: US1000, Q46, BD3, BD4.
10. Enter the serial number of the fan used to collect the building air leakage data.

Section C. Envelope Leakage Test (ENV20b)

1. Enter the time average period used on the manometer during the test. Must be at least 10 seconds.
2. Enter the first of five baseline building pressure readings.
3. Enter the second of five baseline building pressure readings.
4. Enter the third of five baseline building pressure readings.
5. Enter the fourth of five baseline building pressure readings.
6. Enter the fifth of five baseline building pressure readings.
7. This field is automatically calculated when using the online form. The equation used to calculate this value in the field equals [Largest value of (C. 2 through C. 6)] –[smallest value of (C. 2 through C. 6)] = Baseline Range
8. This field is automatically calculated when using the online form. The values entered the field C. 8 equals a. if row C. 7 > 5.0, enter "Standard"; b. if row C. 7 ≥ 5 and ≤ 10, enter "Reduced"; c. if row C. 7 > 10, "**cannot use single-point test", do not proceed**.
9. This field is automatically calculated when using the online form. The equation used to calculate this value in the field equals (C.2+ C.3+ C.4+ C.5+ C.6)/5 = Average Baseline Building Pressure Reading
10. Enter the pre-test baseline building pressure. The protocols allow the average from Row C.9 or a newly measured number to be used. Note that the automatic baseline and @50 Pa functions must both be turned ON for this test.
11. Enter the induced building pressure from the manometer. It should be as close to -50 Pa as possible but no smaller (absolute) than minus 15 Pa. Note that the protocols require depressurization of the envelope. All blower door induced pressures are to be negative relative to outside. Note that the automatic baseline and @50 Pa functions must both be turned ON for this test.
12. Enter the fan flow from the manometer that corresponds to the measured unadjusted building pressure from Row C.11. Note that the automatic baseline and @50 Pa functions must both be turned ON for this test.

Section D. Altitude and Temperature Correction

1. This field is automatically calculated when using the online form. The equation used to calculate this value in the field equals:
    a. If the elevation entered in Row A.6 ≤ 5,000 ft, then enter 1 as altitude correction in box D. 1
    b. If the elevation entered in Row A.6 > 5,000 ft, altitude correction equation equals 1 + (0.000006 * A.6)

For information and data collection only. Not valid until registered with a HERS provider

2. Enter the temperature correction factor from Table RA3.8-2 or RA3.8-3 using the indoor and outdoor temperatures entered in Rows A.3 and A.4.

Table RA3.8-2 ***Temperature Correction Factors for Depressurization Testing****- Calculated according to ASTM E779-10*

		Inside Temperature (F)								
		50	**55**	**60**	**65**	**70**	**75**	**80**	**85**	**90**
Outside Temp (F)	**-20**	1.062	1.072	1.081	1.090	1.099	1.108	1.117	1.127	1.136
	-15	1.056	1.066	1.075	1.084	1.093	1.102	1.111	1.120	1.129
	-10	1.051	1.060	1.069	1.078	1.087	1.096	1.105	1.114	1.123
	-5	1.045	1.054	1.063	1.072	1.081	1.090	1.099	1.108	1.117
	0	1.039	1.048	1.057	1.066	1.075	1.084	1.093	1.102	1.111
	5	1.033	1.042	1.051	1.060	1.069	1.078	1.087	1.096	1.105
	10	1.028	1.037	1.046	1.055	1.064	1.072	1.081	1.090	1.099
	15	1.023	1.031	1.040	1.049	1.058	1.067	1.076	1.084	1.093
	20	1.017	1.026	1.035	1.044	1.052	1.061	1.070	1.079	1.087
	25	1.012	1.021	1.029	1.038	1.047	1.056	1.064	1.073	1.082
	30	1.007	1.015	1.024	1.033	1.041	1.050	1.059	1.067	1.076
	35	1.002	1.010	1.019	1.028	1.036	1.045	1.054	1.062	1.071
	40	0.997	1.005	1.014	1.023	1.031	1.040	1.048	1.057	1.065
	45	0.992	1.000	1.009	1.017	1.026	1.035	1.043	1.051	1.060
	50	0.987	0.995	1.004	1.012	1.021	1.029	1.038	1.046	1.055
	55	0.982	0.990	0.999	1.008	1.016	1.024	1.033	1.041	1.050
	60	0.997	0.986	0.994	1.003	1.011	1.019	1.028	1.036	1.045
	65	0.973	0.981	0.989	0.998	1.006	1.015	1.023	1.031	1.040
	70	0.968	0.976	0.985	0.993	1.001	1.010	1.018	1.026	1.035
	75	0.963	0.972	0.980	0.988	0.997	1.005	1.013	1.022	1.030
	80	0.959	0.967	0.976	0.984	0.992	1.000	1.009	1.017	1.025
	85	0.955	0.963	0.971	0.979	0.988	0.996	1.004	1.012	1.020
	90	0.950	0.958	0.967	0.975	0.983	0.991	0.999	1.008	1.016
	95	0.946	0.954	0.962	0.970	0.979	0.987	0.995	1.003	1.011
	100	0.942	0.950	0.958	0.966	0.970	0.982	0.990	0.998	1.007
	105	0.938	0.946	0.954	0.962	0.970	0.978	0.986	0.994	1.002
	110	0.933	0.942	0.950	0.952	0.966	0.974	0.982	0.990	0.998

Table RA3.8-3 ***Temperature Correction Factors for Pressurization Testing****- Calculated according to ASTM E779-10*

		Inside Temperature (F)								
		50	**55**	**60**	**65**	**70**	**75**	**80**	**85**	**90**
Outside Temp (F)	**-20**	0.865	0.861	0.857	0.853	0.849	0.845	0.841	0.837	0.833
	-15	0.874	0.870	0.866	0.862	0.858	0.854	0.850	0.846	0.842
	-10	0.883	0.879	0.874	0.870	0.866	0.862	0.858	0.854	0.850
	-5	0.892	0.887	0.883	0.879	0.875	0.871	0.867	0.863	0.859
	0	0.900	0.896	0.892	0.887	0.883	0.879	0.875	0.871	0.867
	5	0.909	0.905	0.900	0.896	0.892	0.888	0.883	0.879	0.875
	10	0.918	0.913	0.909	0.905	0.900	0.896	0.892	0.888	0.884
	15	0.927	0.922	0.918	0.913	0.909	0.905	0.900	0.896	0.892
	20	0.935	0.931	0.926	0.922	09.17	0.913	0.909	0.905	0.900
	25	0.944	0.939	0.935	0.930	0.926	0.922	0.917	0.913	0.909
	30	0.952	0.948	0.943	0.939	0.934	0.930	0.926	0.921	0.917
	35	0.961	0.956	0.952	0.947	0.943	0.938	0.934	0.930	0.926
	40	0.970	0.965	0.960	0.956	0.951	0.947	0.942	0.938	0.934
	45	0.978	0.974	0.961	0.964	0.960	0.955	0.951	0.946	0.942
	50	0.987	0.982	0.977	0.973	0.968	0.963	0.959	0.955	0.950
	55	0.995	0.990	0.986	0.981	0.976	0.972	0.967	0.963	0.958
	60	1.004	0.999	0.994	0.998	0.985	0.980	0.976	0.971	0.967
	65	1.012	1.008	1.003	0.998	0.993	0.988	0.984	0.979	0.975
	70	1.021	1.016	1.011	1.006	1.001	0.997	0.992	0.988	0.983
	75	1.029	1.024	1.019	1.015	1.010	1.005	1.000	0.996	0.991
	80	1.038	1.033	1.028	1.023	1.018	1.013	1.009	1.004	0.999
	85	1.046	1.041	1.036	1.031	1.026	1.022	1.017	1.012	1.008
	90	1.055	1.050	1.045	1.040	1.035	1.030	1.025	1.020	1.016
	95	1.063	1.058	1.053	1.048	1.043	1.038	1.033	1.028	1.024
	100	1.072	1.066	1.061	1.056	1.051	1.046	1.041	1.037	1.032
	105	1.080	1.075	1.070	1.064	1.059	1.054	1.050	1.045	1.040
	110	1.088	1.083	1.078	1.073	1.068	1.063	1.058	1.053	1.048

3. This field is automatically calculated when using the online form. The equation used to calculate this value in the field equals the product of D.1 * D.2 * C.16.

For information use only. Not suitable for compliance with a

Section E. Accuracy Adjustment

1. This field is automatically calculated when using the online form. The equation used to calculate this value in the field equals:
    c. If the accuracy level C.8 = Standard, then enter 1 as accuracy adjustment in box E. 1
    d. If the accuracy level C.8 = Reduced, accuracy adjustment equation equals 1+[0.1+(50/C. 14)]
2. This field is automatically calculated when using the online form. The equation used to calculate this value in the field equals the D.3 * E.1. = Adjusted CFM50 **Note -** This is the number that must be less than or equal to the target building air leakage from the CF-1R, shown in Row A.2.

For information and data collection only. Not valid until registered with a HERS provider

BUILDING LEAKAGE DIAGNOSTIC TEST

CERTIFICATE OF INSTALLATION		CF2R-ENV-20-H
Building Leakage Diagnostic Test		(Page 1 of 3)
Project Name:	Enforcement Agency:	Permit Number:
Dwelling Address:	City	Zip Code

A. Building Air Leakage – General Information		
01	Test Procedure Used:	
02	Building Air Leakage Target from CF-1R	
03	Indoor temperature during test (degreeF)	
04	Outdoor temperature during test (degreeF)	
05	Blower door location	
06	Building Elevation (ft)	
07	Building Volume (ft3)	
08	Date of the diagnostic test for this dwelling	

B. Diagnostic Equipment Information		
01	Number of Fans Used to Pressurize Home	
02	Fan #1	
03	Manometer Make	
04	Manometer Model	
05	Manometer Serial Number	
06	Manometer Calibration Date	
07	Manometer Calibration Status	
08	Fan Make	
09	Fan Model	
10	Fan Serial Number	

C. Envelope Leakage Diagnostic Test - ENV20c – Multi-Point Air Tightness Test		
01	Name and version of ASTM E779-10 compliant software used for multi-point test.	
02	Pre-test baseline building pressure	
03	Time average period of meter	
04	Unadjusted Building Pressure Target	
05	Unadjusted Building Pressure Measured	
06	Induced building pressure	
07	A minimum of eight readings were taken spaced evenly between 15 Pa and 60 Pa (or highest attainable pressure).	
08	Post-test baseline building pressure	
09	Corrected CFM50 (from software)	

D. Altitude and Temperature Correction (not used, performed by blower door software)

E. Accuracy Adjustment		
01	Percent uncertainty @ 95% confidence level (from software)	
02	Accuracy level	
03	Extending factor	
04	Adjusted CFM50 (measured air leakage rate)	

for information and data collection only. Not valid until registered with a HERS provider

CERTIFICATE OF INSTALLATION		CF2R-ENV-20-H
Building Leakage Diagnostic Test		(Page 2 of 3)
Project Name:	Enforcement Agency:	Permit Number:
Dwelling Address:	City	Zip Code

F. Compliance Statement
<< if manometer Calibration Date in B. 6 is within 12 months of the date of the diagnostic test A. 8 and if Adjusted CFM50 Leakage in E. 4 is less than or equal to the Building Air Leakage Rate Target in A. 2 then display text: "Building Passes Envelope Leakage Test"; if manometer Calibration Date in B. 6 is more than 12 months from the date of the diagnostic test A. 8 or if Adjusted CFM50 Leakage in E. 4 is more than the Building Air Leakage Rate Target in A. 2 then display text: "Building Fails Envelope Leakage Test">>

G. Additional Requirements For Compliance	
The responsible persons signature on this document indicates that the following was completed before a blower-door test began:	
01	Open all interior doors and access including those to closets and those between a conditioned basement and attic.
02	HVAC Supply and return register dampers shall be fully open.
03	Temporarily sealing of combustion flues and intermittent exhaust fans are not allowed. Some examples are: combustion flues, fresh air intakes, dryer vents, bathroom and kitchen exhaust vents and fire place.
04	Continuously operated ventilation devices like energy recovery ventilators may be sealed.
05	Multifamily – Each dwelling unit must be tested individually and shown to meet the leakage requirements. Pressurization of the adjacent dwelling units while conducting this test is not allowed.

For information and data collec
only. Not valid until registered with
HERS provider

CERTIFICATE OF INSTALLATION		CF2R-ENV-20-H
Building Leakage Diagnostic Test		(Page 3 of 3)
Project Name:	Enforcement Agency:	Permit Number:
Dwelling Address:	City	Zip Code

DOCUMENTATION AUTHOR'S DECLARATION STATEMENT

1. I certify that this Certificate of Installation documentation is accurate and complete.

Documentation Author Name:	Documentation Author Signature:
Documentation Author Company Name:	Date Signed:
Address:	CEA/HERS Certification Identification (If applicable):
City/State/Zip:	Phone:

RESPONSIBLE PERSON'S DECLARATION STATEMENT

I certify the following under penalty of perjury, under the laws of the State of California:

1. The information provided on this Certificate of Installation is true and correct.
2. I am eligible under Division 3 of the Business and Professions Code in the applicable classification to accept responsibility for the system design, construction, or installation of features, materials, components, or manufactured devices for the scope of work identified on this Certificate of Installation and attest to the declarations in this statement (responsible builder/installer), otherwise I am an authorized representative of the responsible builder/installer.
3. The constructed or installed features, materials, components or manufactured devices (the installation) identified on this Certificate of Installation conforms to all applicable codes and regulations, and the installation conforms to the requirements given on the plans and specifications approved by the enforcement agency.
4. I understand that a HERS rater will check the installation to verify compliance, and that if such checking identifies defects; I am required to take corrective action at my expense. I understand that Energy Commission and HERS Provider representatives will also perform quality assurance checking of installations, including those approved as part of a sample group but not checked by a HERS rater, and if those installations fail to meet the requirements of such quality assurance checking, the required corrective action and additional checking/testing of other installations in that HERS sample group will be performed at my expense.
5. I reviewed a copy of the Certificate of Compliance approved by the enforcement agency that identifies the specific requirements for the scope of construction or installation identified on this Certificate of Installation, and I have ensured that the requirements that apply to the construction or installation have been met.
6. I will ensure that a registered copy of this Certificate of Installation shall be posted, or made available with the building permit(s) issued for the building, and made available to the enforcement agency for all applicable inspections. I understand that a registered copy of this Certificate of Installation is required to be included with the documentation the builder provides to the building owner at occupancy.

Responsible Builder/Installer Name:	Responsible Builder/Installer Signature:	
Company Name: (Installing Subcontractor or General Contractor or Builder/Owner)	Position With Company (Title):	
Address:	CSLB License:	
City/State/Zip:	Phone	Date Signed:
Third Party Quality Control Program (TPQCP) Status:	Name of TPQCP (if applicable):	

For information and data collection only. Not valid until registered with a HERS provider

Instructions for ENV20c

Section A. Building Air Leakage – General Information

1. Select the appropriate test procedure. This selection will determine which version of this document will be used (a, b, c, d, or e) and therefore which data must be collected. Note that single-point tests can only be used under certain conditions. Note that newer manometers have automatic functions for compensating for baseline (automatic baseline) and compensating for house pressures other than the target (@50 Pa). It is preferable to use these, when available, however if these automatic functions are to be used, they must BOTH be used.
2. This number is automatically pulled from the performance approach Certificate of Compliance and is the target maximum that was entered by the documentation author. If this number cannot be achieved, the performance compliance calculations can be redone with a higher number or without the requirement for building air leakage.
3. Enter the indoor temperature measured at the time that the building air leakage test was performed.
4. Enter the outdoor temperature measured at the time that the building air leakage test was performed.
5. Provide a brief description of the location where the blower door was installed for the test. Examples: "front entry door on west side of house", "door between house and garage", "large window in family room".
6. Enter the building elevation use the value for the closest city found in Joint Appendix JA2.2. Only elevations higher than 5000 feet require an adjustment to the calculations.
7. This number is automatically pulled from the performance approach Certificate of Compliance. It is used to calculate air changes.
8. Enter the date that the building leakage test data was collected.

Section B. Diagnostic Equipment Information

1. Enter the number of blower door fan systems required to run simultaneously to pressurize the home for the building air leakage test. If more than one system is used, the fan flow numbers need to be manually added together, unless blower door software is used that will accommodate multiple fan systems running simultaneously.
2. Enter the appropriate information for each fan system used in the following rows.
3. Enter the make (brand) of the manometer used to collect the building air leakage data. Examples: Retrotec, Energy Conservatory.
4. Enter the model of the manometer used to collect the building air leakage data. Examples: DM-2 Mark II, DG700.
5. Enter the serial number of the manometer used to collect the building air leakage data.
6. Enter the most recent date that the manometer was calibrated by following manufacturer's calibration specifications.
7. This field is automatically filled. If the calibration date was more than 12 months prior to the test date entered in Row A.8, above, an error will appear.
8. Enter the make (brand) of the fan used to collect the building air leakage data. Examples: Retrotec, Energy Conservatory.
9. Enter the model of the fan used to collect the building air leakage data. Examples: US1000, Q46, BD3, BD4.
10. Enter the serial number of the fan used to collect the building air leakage data.

Section C. Envelope Leakage Test (ENV20c)

1. This test requires the use of an ASTM E779-10 compliant software. Enter the name and version of the software used to perform the calculations for the multi-point test. Note that the automatic baseline and @50 Pa functions should NOT be used for this test. Note that for QA purposes the inputs and test reports from the software may be requested by a HERS provider and should be kept for at least 5 years from date of test. Examples: FanTestic Pro v.5.0, TECTITE v.4.0
2. Enter the pre-test baseline building pressure reading. Note that the automatic baseline and @50 Pa functions should NOT be used for this test.
3. Enter the time average period used on the manometer during the test. Must be at least 10 seconds.
4. This field is automatically calculated when using the online form. The equation used to calculate this value in the field equals -60 + C.2 = Unadjusted Building Pressure Target. This number is for reference only to assist the user.
5. Enter the measured unadjusted building pressure straight from the manometer. It should be as close to the target from Row C.4 as possible. Note that the protocols require depressurization of the envelope. All blower door induced pressures are to be negative relative to outside. Note that the automatic baseline and @50 Pa functions should NOT be used for this test.
6. This field is automatically calculated when using the online form. The equation used to calculate this value in the field equals C.5 – C.2 = Induced Building Pressure.
7. The protocols in RA3.8.7.5 require that a minimum of eight total readings, equally spaced, be entered into the software. The lowest reading can be no smaller (absolute) than minus 4 Pa plus the baseline pressure reading.
8. Enter the pre-test baseline building pressure reading. Note that the automatic baseline and @50 Pa functions should NOT be used for this test.
9. Enter the CFM50 value reported back from the software based on the eight data points entered. Make sure that it is adjusted for temperature, altitude and accuracy by the software.

Section D. Altitude and Temperature Correction (Done by software)

Section E. Accuracy Adjustment

1. Enter the "percent uncertainty @ 95% confidence level" reported back from the software based on the eight data points entered.

For information and data collection only. Not valid until registered with a HERS provider

2. This field is automatically calculated when using the online form. The values entered the field E. 1 equals a. if row E. 1 ≥ 10.0, enter "Standard"; b. if row E. 1 > 10, enter "Reduced".
3. This field is automatically calculated when using the online form. The equation used to calculate this value in the field equals:
    a. If the accuracy level E.2 = Standard, then enter 1 as extending factor in box E. 3
    b. If the accuracy level E.2 = Reduced, extending factor equation equals 1+(% uncertainty/100)
4. This field is automatically calculated when using the online form. The equation used to calculate this value in the field equals the C.9 * E.3. = Adjusted CFM50 **Note -** This is the number that must be less than or equal to the target building air leakage from the CF-1R, shown in Row A.2.

For information and data collection only. Not valid until registered with a HERS provider

INDOOR AIR QUALITY AND MECHANICAL VENTILATION

CERTIFICATE OF INSTALLATION		CF2R-MCH-27-H
Indoor Air Quality and Mechanical Ventilation		(Page 1 of 5)
Project Name:	Enforcement Agency:	Permit Number:
Dwelling Address:	City	Zip Code

Title 24, Part 6, Section 150.0(o) **Ventilation for Indoor Air Quality.** All dwelling units shall meet the requirements of ANSI/ASHRAE Standard62.2. Ventilation and Acceptable Indoor Air Quality in Low-Rise Residential Buildings. ***Equation and table numbering on this form corresponds to the numbering for that information in the published ANSI/ASHRAE Standard 62.2-2010.***

A. Dwelling Mechanical Ventilation - General Information		
01	Building Type	
02	Conditioned floor area of dwelling unit	
03	Number of bedrooms in dwelling unit	
04	Ventilation Operation Schedule	
05	Whole-Building Ventilation Rate Calculation Method.	
06	Whole Building Ventilation System Type	
07	determine compliance method for this document; display applicable tables below; (this row not visible to user)	

27d - Intermittent Ventilation Airflow – Total Vent Rate Method

B. Whole-Building Continuous Ventilation - Total Ventilation Rate Method - A mechanical supply system, exhaust system, or combination thereof shall provide whole-building ventilation with outdoor air each hour at no less than the rate in 62.2 equation 4.7.		
01	Total Required Ventilation rate (fan + infiltration), (Qtot)	
02	CFM50 from a registered ENV-20a-d	
03	Equivalent Leakage Area used for ventilation	
04	What is the vertical distance from the lowest above-grade floor to the highest ceiling in feet?	
05	What is the weather and shielding factor (wsf) for the city listed in 62.2 Appendix X Table X1?	
06	Normalized Leakage (NL)	
07	Ventilation provided by infiltration in (Qinf)	
08	Required Continuous Whole-Building Ventilation Rate (Q_{fan})	

C. Intermittent Ventilation: The effective ventilation rate of an **intermittent** system is the combination of its delivered capacity, its fractional on-time, cycle time, and the ventilation effectiveness from Table 4.2. <<This section is only printed if an intermittent strategy is chosen in row 1>>		
01	In a single on off cycle, what is the ON time in hours?	
02	In a single on off cycle, what is the OFF time in hours?	
03	System must operate at least once every 24 hours. (Row 6 + Row 7 must be less than or equal to 24 hours)	
04	Daily fractional on time (*f* used in Table 4.2).	
05	System must operate at least 10% of the time.	
06	Turnover (N used in Table 4.2)	
07	Ventilation effectiveness (e, from Table 4.2)	
08	Intermittent ventilation rate	
09	Installed Intermittent ventilation Rate	

D. Compliance Statement

For information and data collection only. Not valid until registered with a HERS provider

CERTIFICATE OF INSTALLATION		CF2R-MCH-27-H
Indoor Air Quality and Mechanical Ventilation		(Page 2 of 5)
Project Name:	Enforcement Agency:	Permit Number:
Dwelling Address:	City	Zip Code

E. Local Mechanical Exhaust System – Fan selection and duct design criteria for compliance

Local mechanical exhaust fans shall be installed in each kitchen and bathroom. Delivered local ventilation rates:

- **All local ventilation rates have been measured using a flow hood, flow grid, or other airflow measuring device and meet the requirements of 62.2 Tables 5.1 or 5.2. OR**
- **The airflow rating at a pressure of 0.25 in. w.c. of a certified fan is assumed because the local ventilation system duct sizing meets the prescriptive requirements of 62.2 Table 5.3, or manufacturer's design criteria.**

Table 5.1
Intermittent Local Ventilation Exhaust Airflow Rates

Application	Airflow	Notes
Kitchen	100 cfm	
Bathroom	50 cfm	

Table 5.2
Continuous Local Ventilation Exhaust Airflow Rates

Application	Airflow	Notes
Kitchen	5 ACH	
Bathroom	20 cfm	

Table 5.3
Prescriptive Duct Sizing Requirements

Diameter, (in)	Flex Duct				Smooth Duct			
Fan Rating cfm @ 0.25 in. w.g.	50	80	100	125	50	80	100	125
	Maximum Allowable Duct Length (ft)							
Diameter, (in)	Flex Duct				Smooth Duct			
3	X	X	X	X	5	X	X	X
4	70	3	X	X	105	35	5	X
5	NL	70	35	20	NL	135	85	55
6	NL	NL	125	95	NL	NL	NL	145
7 and above	NL	NL	NL	NL	NL	NL	NL	NL

This table assumes no elbows. Deduct 15 ft of allowable duct length for each turn, elbow, or fitting. Interpolation and extrapolation in 62.2 Table 5.3 is not allowed. For airflow values not listed, use the next higher value. This table is not applicable for airflow > 125 cfm.
NL = no limit on duct length of this size.
X = not allowed, any length of duct of this size with assumed turns, elbows, fittings will exceed the rated pressure drop.

The responsible person's signature on this document indicates that the installation meets the applicable requirements specified in Table D – Local Mechanical Exhaust System.

For information and data collection only. Not valid until registered with a HERS provider

CERTIFICATE OF INSTALLATION		CF2R-MCH-27-H
Indoor Air Quality and Mechanical Ventilation		(Page 3 of 5)
Project Name:	Enforcement Agency:	Permit Number:
Dwelling Address:	City	Zip Code

F. Other Requirements	
The items listed below (6.1 through 6.8) correspond to the information given in ASHRAE 62.2 Section 6 "Other Requirements". Refer also to Chapter 4.6 of the Residential Compliance Manual (Section 4.6.5) for information describing these "Other Requirements". The signature of the Responsible Person in the declaration statement below certifies that the building complies with these requirements specified in ASHRAE 62.2 Section 6.1 through 6.9 if applicable.	
01	**6.1 Transfer Air** = <<Measures shall be taken to minimize air movement across envelope components to occupiable spaces from garages, unconditioned crawl spaces, and unconditioned attics. Supply and balanced ventilation systems shall be designed and constructed to provide ventilation air directly from the outdoors>>
02	**6.2 Instructions and Labeling** = <<Information on the ventilation design and/or ventilation systems installed, instructions on their proper operation to meet the requirements of this standard, and instructions detailing any required maintenance (similar to that provided for HVAC systems) shall be provided to the owner and the occupant of the dwelling unit. Controls shall be labeled as to their function (unless that function is obvious, such as toilet exhaust fan switches). See Chapter 13 of Guideline 24[2] for information on instructions and labeling>>
03	**6.3 Cloths Dryers** = <<Clothes dryers shall be exhausted directly to the outdoors>>
04	**6.4 Combustion and solid-fuel burning appliances** = << Combustion and solid-fuel burning appliances must be provided with adequate combustion and ventilation air and vented in accordance with manufacturer's installation instructions, NFPA 54/ANSI Z223.1, National Fuel Gas Code, NFPA 31, Standard for the Installation of Oil-Burning Equipment, or NFPA 211, Standard for Chimneys, Fireplaces, Vents, and Solid-Fuel Burning Appliances, or other equivalent code acceptable to the building official. Where atmospherically vented combustion appliances or solid-fuel burning appliances are located inside the pressure boundary, the total net exhaust flow of the two largest exhaust fans (not including a summer cooling fan intended to be operated only when windows or other air inlets are open) shall not exceed 15 cfm/100 ft² (75 Lps/100 m^2) of occupiable space when in operation at full capacity. If the designed total net flow exceeds this limit, the net exhaust flow must be reduced by reducing the exhaust flow or providing compensating outdoor airflow. Atmospherically vented combustion appliances do not include direct-vent appliances.>>
05	**6.5 Garages** = <<When an occupiable space adjoins a garage, the design must prevent migration of contaminants to the adjoining occupiable space. Air seal the walls, ceilings, and floors that separate garages from occupiable space. To be considered air sealed, all joints, seams, penetrations, openings between door assemblies and their respective jambs and framing, and other sources of air leakage through wall and ceiling assemblies separating the garage from the residence and its attic area shall be caulked, gasketed, weather stripped, wrapped, or otherwise sealed to limit air movement. Doors between garages and occupiable spaces shall be gasketed or made substantially airtight with weather stripping>>
06	**6.6 Ventilation Opening Area** = <<Spaces shall have ventilation openings as listed below. Such openings shall meet the requirements of Section 6.8>>
07	**6.7 Minimum filtration** = <<Mechanical systems that supply air to an occupiable space through ductwork exceeding 10 ft (3 m) in length and through a thermal conditioning component, except evaporative coolers, shall be provided with a filter having a designated minimum efficiency of MERV 6, or better, when tested in accordance with ANSI/ASHRAE Standard 52.2, Method of Testing General Ventilation Air-Cleaning Devices for Removal Efficiency by Particle Size, or a minimum Particle Size Efficiency of 50% in the 3.0-10 µm range in accordance with AHRI Standard 680, Performance Rating of Residential Air Filter Equipment. The system shall be designed such that all recirculated and mechanically supplied outdoor air is filtered before passing through the thermal conditioning components. The filter shall be located and installed in such a manner as to facilitate access and regular service by the owner>>
08	**6.8 Air Inlets** = <<Air inlets that are part of the ventilation design shall be located a minimum of 10 ft (3 m) from known sources of contamination such as a stack, vent, exhaust hood, or vehicle exhaust. The intake shall be placed so that entering air is not obstructed by snow, plantings, or other material. Forced air inlets shall be provided with rodent/insect screens (mesh not larger than 1/2 inch)>>
09	**6.9 Carbon Monoxide Detectors** = << A carbon monoxide alarm shall be installed in each dwelling unit in accordance with NFPA 720, *Standard for the Installation of Carbon Monoxide (CO) Detection and Warning Equipment*14, and shall be consistent with requirements of applicable laws, codes, and standards.add brief description>>
The responsible person's signature on this document indicates that the installation meets the applicable requirements specified in Table E – Other Requirements.	

For information and data collection only. Not valid until registered with a HERS provider.

CERTIFICATE OF INSTALLATION		CF2R-MCH-27-H
Indoor Air Quality and Mechanical Ventilation		(Page 4 of 5)
Project Name:	Enforcement Agency:	Permit Number:
Dwelling Address:	City	Zip Code

G. Air Moving Equipment	
The items listed below (7.1 through 7.3) correspond to the information given in ASHRAE 62.2 Section 7 "Air-Moving Equipment". Refer also to Chapter 4.6 of the Residential Compliance Manual (Section 4.6.6) for information describing these requirements in more detail. The signature of the Responsible Person in the declaration statement below certifies that the building complies with these requirements specified in ASHRAE 62.2 Section 7.1 through 7.3 if applicable.	
01	**7.1 Selection and Installation.** Ventilation devices and equipment shall be tested and listed in accordance with specific standards. Installations of systems or equipment shall be carried out in accordance with manufacturers' design requirements and installation instructions.
02	**7.2 Sound Ratings for Fans.** Ventilation fans shall be rated for sound at no less than the minimum airflow rate required by this standard, as noted below. These sound ratings shall be at a minimum of 0.1 in. w.c. (25 Pa) static pressure. 7.2.1 **Whole-Building or Continuous Ventilation Fans.** These fans shall be rated for sound at a maximum of 1.0 sone. 7.2.2 **Intermittent Local Exhaust Fans.** Fans used to comply with Section 5.2 shall be rated for sound at a maximum of 3 sone, unless their maximum rated airflow exceeds 400 cfm (200 L/s). (Some exceptions may apply.)
03	**7.3 Multibranch Exhaust Ducting.** If more than one of the exhaust fans in a dwelling unit shares a common exhaust duct, each fan shall be equipped with a back-draft damper to prevent the recirculation of exhaust air from one room to another through the exhaust ducting system.
The responsible person's signature on this document indicates that the installation meets the applicable requirements specified in Table F – Air Moving Equipment.	

H. Multifamily Buildings - Other Requirements <<only print this section if multi-family is selected in row A.1>>	
The items listed below correspond to the information given in ASHRAE 62.2 Section 8 "Multifamily Buildings". Refer also to Chapter 4.6 of the Residential Compliance Manual (Section 4.6.5) for information describing these requirements in more detail. The signature of the Responsible Person in the declaration statement below certifies that the building complies with these requirements specified in ASHRAE 62.2 Section 8, if applicable.	
01	**8.4.1 Transfer Air.** Measures shall be taken to minimize air movement across envelope components separating dwelling units, including sealing penetrations in the common walls, ceilings, and floors of each unit and by sealing vertical chases adjacent to the units. All doors between dwelling units and common hallways shall be gasketed or made substantially airtight. **8.4.1.1 Compliance.** One method of demonstrating compliance with Section 8.4.1 shall be to verify a leakage rate below a maximum of 0.2 cfm per ft^2 (100 L/s per 100 m^2) of the dwelling unit envelope area (i.e., the sum of the area of the walls between dwelling units, exterior walls, ceiling and floor) at a test pressure of 50 Pa by a blower door test. The test shall be conducted with the dwelling unit as if it were exposed to outdoor air on all sides, top, and bottom by opening doors and windows of adjacent dwelling units.
The responsible person's signature on this document indicates that the installation meets the applicable requirements specified in Table G – Multifamily Buildings	

For information and data collection only. Not valid until registered with a HERS provider

CERTIFICATE OF INSTALLATION		CF2R-MCH-27-H
Indoor Air Quality and Mechanical Ventilation		(Page 5 of 5)
Project Name:	Enforcement Agency:	Permit Number:
Dwelling Address:	City	Zip Code

DOCUMENTATION AUTHOR'S DECLARATION STATEMENT	
1. I certify that this Certificate of Installation documentation is accurate and complete.	
Documentation Author Name:	Documentation Author Signature:
Documentation Author Company Name:	Date Signed:
Address:	CEA/HERS Certification Identification (If applicable):
City/State/Zip:	Phone:

RESPONSIBLE PERSON'S DECLARATION STATEMENT

I certify the following under penalty of perjury, under the laws of the State of California:

1. The information provided on this Certificate of Installation is true and correct.
2. I am eligible under Division 3 of the Business and Professions Code in the applicable classification to accept responsibility for the system design, construction, or installation of features, materials, components, or manufactured devices for the scope of work identified on this Certificate of Installation and attest to the declarations in this statement (responsible builder/installer), otherwise I am an authorized representative of the responsible builder/installer.
3. The constructed or installed features, materials, components or manufactured devices (the installation) identified on this Certificate of Installation conforms to all applicable codes and regulations, and the installation conforms to the requirements given on the plans and specifications approved by the enforcement agency.
4. I understand that a HERS rater will check the installation to verify compliance, and that if such checking identifies defects; I am required to take corrective action at my expense. I understand that Energy Commission and HERS Provider representatives will also perform quality assurance checking of installations, including those approved as part of a sample group but not checked by a HERS rater, and if those installations fail to meet the requirements of such quality assurance checking, the required corrective action and additional checking/testing of other installations in that HERS sample group will be performed at my expense.
5. I reviewed a copy of the Certificate of Compliance approved by the enforcement agency that identifies the specific requirements for the scope of construction or installation identified on this Certificate of Installation, and I have ensured that the requirements that apply to the construction or installation have been met.
6. I will ensure that a registered copy of this Certificate of Installation shall be posted, or made available with the building permit(s) issued for the building, and made available to the enforcement agency for all applicable inspections. I understand that a registered copy of this Certificate of Installation is required to be included with the documentation the builder provides to the building owner at occupancy.

Responsible Builder/Installer Name:	Responsible Builder/Installer Signature:	
Company Name: (Installing Subcontractor or General Contractor or Builder/Owner)	Position With Company (Title):	
Address:	CSLB License:	
City/State/Zip:	Phone	Date Signed:
Third Party Quality Control Program (TPQCP) Status:	Name of TPQCP (if applicable):	

For information and data collection only. Not valid until registered with a HERS provider.

User Instructions – MCH-27d:

Section A. General Information

1 This information is automatically pulled from the CF1R Choices are "single family" and "low-rise multifamily"
2 This information is automatically pulled from the CF1R. Value to be entered in the field equals the conditioned floor area of the space, in square feet.
3 This information is automatically pulled from the CF1R. Value to be entered in the field equals the number of bedrooms in the home.
4 Select the Ventilation Operation Schedule method used from the choices provided:
- Continuous
- Intermittent

5 Select the Whole Building Ventilation Rate Calculation Method from the choices provided:
- Fan Ventilation Rate Method
- Total Ventilation Rate Method

6 Select the Whole Building Ventilation System Type from the choices provided:
- Standalone - Exhaust
- Standalone - Supply
- Standalone - Balanced
- Central Fan Integrated (CFI)

Section B. Whole Building Continuous Ventilation – Total Ventilation Rate Method

1 This value is automatically calculated using 62.2 equation 4.2a. The equation used to calculate this value in the field equals:
   a. If A.1= Single Family then [(0.03 x conditioned floor area A. 2) + 7.5(Number of bedrooms A.3 + 1)] = Required Continuous Whole-Building Ventilation Rate
   b. If A.1= Multifamily then [(0.05 x conditioned floor area A. 2) + 7.5(Number of bedrooms A.3 + 1)] = Required Continuous Whole-Building Ventilation Rate
2 This information is automatically pulled from the registered ENV-20a-d row A.2
3 This value is automatically calculated. The equation used to calculate this value in the field equals: (CFM50 B.2 x 0.055= Equivalent Leakage Area (ELA)
4 User entered value equals the vertical distance from the lowest above-grade floor to the highest ceiling in feet
5 User entered value equals the Weather Shielding Factor (wsf) from 62.2 Appendix X Table X1.
6 This value is automatically calculated using 62.2 equation 4.5. The equation used to calculate this value in the field equals: [1000 x (Equivalent Leakage Area (ELA) row B.2/ conditioned floor area A. 2) x (Vertical Distance B.4/8.2)^0.4]= Normalized Leakage (NL)
7 This value is automatically calculated using 62.2 equation 4.6a. The equation used to calculate this value in the field equals: (Normalized Leakage (NL) row B.6 x conditioned floor area A. 2)/7.3= Ventilation Provided by Ventilation
8 This value is automatically calculated using 62.2 equation 4.6a. The equation used to calculate this value in the field equals: (Normalized Leakage (NL) row B.6 x conditioned floor area A. 2)/7.3= Ventilation Provided by Infiltration in (CFM)
9 This value is automatically calculated using 62.2 equation 4.7. The equation used to calculate this value in the field equals: (Required Continuous Whole-Building Ventilation Rate row B.1 - Ventilation Provided by Infiltration row B.8 = Required Continuous Whole-Building Ventilation Rate in (CFM)

Section C. Intermittent Ventilation

1 Intermittent ventilation requires controls that ensure a regular operating schedule every 24 hours. Within a 24 hour period there will be one or more regular on off cycles. For a single on off cycle, enter the on time in hours. This value will be verified by a HERS rater.
2 Intermittent ventilation requires controls that ensure a regular operating schedule every 24 hours. Within a 24 hour period there will be one or more regular on off cycles. For a single on off cycle, enter the off time in hours. This value will be verified by a HERS rater.
3 This row performs an automatic check. The intermittent ventilation system must operate at least once every 24 hours. For this to occur, the on time plus the off time in a single on off cycle must be less than 24 hours. If this is true, "OK" will appear. If this is not true, an error will appear here and correct values will need to be entered into Rows C.1 and C.2. The equation used to calculate this value in the field equals: Time on in hours row C.1 + Time off in hours row C.2.
4 This value is automatically calculated. It is the daily fractional on time (*f*) used in 62.2 Table 4.2. A value of 0.60 means that in a 24 hour period the fan will run 60% of the time. The equation used to calculate this value in the field equals: On time in Hours row C.1/(On time in Hours row C.1 + Off time in Hours row C.2)= Daily fractional on time
5 This row performs an automatic check. The ventilation system must operate at least 10% of the time. Row C.4 must be ≥ 0.10. If this is true, "OK" will appear. If this is not true, an error message will appear here and correct values will need to be entered into Rows C.1 and C.2.
6 This value is automatically calculated. It is the turnover (N) used in 62.2 Table 4.2. The equation used to calculate this value in the field equals: [12.8 x Continuous Whole-Building Ventilation Rate row B.1 x (On time in Hours row C.1 + Off time in Hours row C.2)]/ Conditioned floor area of dwelling unit row A.2= Turnover N

For information and data collection only. Not official until registered with a HERS provider

7 User entered value use the daily fractional time (*f*) from Row C.4 and the turnover (N) from Row C.6 to determine the ventilation effectiveness value (e) from 62.2 table 4.2.

8 This value is automatically calculated using 62.2 equation 4.8. It represents the required airflow in cfm that must be delivered during the ventilation system on times. This value will be verified by a HERS rater. The equation used to calculate this value in the field equals: Continuous Whole-Building Ventilation Rate row B.1/(Daily fractional on time row C.4 x ventilation effectiveness value row C.7= required Intermittent ventilation rate

9 User entered value equals the installed intermittent ventilation rate in (CFM)

For information and data collection only. Not valid until registered with a HERS provider

BUILDING LEAKAGE DIAGNOSTIC TEST

CERTIFICATE OF INSTALLATION		CF2R-ENV-20-H
Building Leakage Diagnostic Test		(Page 1 of 3)
Project Name:	Enforcement Agency:	Permit Number:
Dwelling Address:	City	Zip Code

A. Building Air Leakage – General Information		
01	Test Procedure Used:	
02	Building Air Leakage Target from CF-1R	
03	Indoor temperature during test (degreeF)	
04	Outdoor temperature during test (degreeF)	
05	Blower door location	
06	Building Elevation (ft)	
07	Building Volume (ft3)	
08	Date of the diagnostic test for this dwelling	

B. Diagnostic Equipment Information		
01	Number of Fans Used to Pressurize Home	
02	Fan #1	
03	Manometer Make	
04	Manometer Model	
05	Manometer Serial Number	
06	Manometer Calibration Date	
07	Manometer Calibration Status	
08	Fan Make	
09	Fan Model	
10	Fan Serial Number	

C. Envelope Leakage Diagnostic Test - ENV20e – Repeated Single Point Air Tightness Test With Automatic Meter										
01	Time average period of meter									
02	Pre-test baseline building pressure									
03	Blower Door Software used for calculations?									
04	Data Points =>	#1	#2	#3	#4	#5	#6	#7	#8	#9
05	(Min 5, max 9 data pts)									
06	Fan configuration*									
07	Induced building pressure									
08	Nominal CFM50									
09	Average nominal CFM50	<<calculated, average of nominal CFM50 values, above>>								

D. Altitude and Temperature Correction		
<<if row C. 3 = “no”, use this section>>		
01	Altitude correction factor	
02	Temperature correction factor	
03	Corrected CFM50	

For information and data collection only. Not valid until registered with a HERS provider

CERTIFICATE OF INSTALLATION		CF2R-ENV-20-H
Building Leakage Diagnostic Test		(Page 2 of 3)
Project Name:	Enforcement Agency:	Permit Number:
Dwelling Address:	City	Zip Code

E. Accuracy Adjustment		
<<if row C. 3 = “no”, use this section>>		
01	Standard deviation of nominal CFM 50 values above	
02	Percent uncertainty	
03	Accuracy level	
04	Extending factor	
05	Adjusted CFM50 (measured air leakage rate)	
<<if row C. 3 = “yes”, use next two lines>>		
06	Corrected CFM50 (from software)	
07	Percent uncertainty @ 95% confidence level (from software)	

F. Compliance Statement
<< if manometer Calibration Date in B. 6 is within 12 months of the date of the diagnostic test A. 8 and if Adjusted CFM50 Leakage in E. 8 is less than or equal to the Building Air Leakage Rate Target in A. 2 then display text: "Building Passes Envelope Leakage Test"; if manometer Calibration Date in B. 6 is more than 12 months from the date of the diagnostic test A. 8 or if Adjusted CFM50 Leakage in E. 8 is more than the Building Air Leakage Rate Target in A. 2 then display text: "Building Fails Envelope Leakage Test">>

G. Additional Requirements For Compliance	
The responsible persons signature on this document indicates that the following was completed before a blower-door test began:	
01	Open all interior doors and access including those to closets and those between a conditioned basement and attic.
02	HVAC Supply and return register dampers shall be fully open.
03	Temporarily sealing of combustion flues and intermittent exhaust fans are not allowed. Some examples are: combustion flues, fresh air intakes, dryer vents, bathroom and kitchen exhaust vents and fire place.
04	Continuously operated ventilation devices like energy recovery ventilators may be sealed.
05	Multifamily – Each dwelling unit must be tested individually and shown to meet the leakage requirements. Pressurization of the adjacent dwelling units while conducting this test is not allowed.

For informational data collection only. Not valid unless entered with a HERS provider

CERTIFICATE OF INSTALLATION		CF2R-ENV-20-H
Building Leakage Diagnostic Test		(Page 3 of 3)
Project Name:	Enforcement Agency:	Permit Number:
Dwelling Address:	City	Zip Code

DOCUMENTATION AUTHOR'S DECLARATION STATEMENT

1. I certify that this Certificate of Installation documentation is accurate and complete.

Documentation Author Name:	Documentation Author Signature:
Documentation Author Company Name:	Date Signed:
Address:	CEA/HERS Certification Identification (If applicable):
City/State/Zip:	Phone:

RESPONSIBLE PERSON'S DECLARATION STATEMENT

I certify the following under penalty of perjury, under the laws of the State of California:

1. The information provided on this Certificate of Installation is true and correct.
2. I am eligible under Division 3 of the Business and Professions Code in the applicable classification to accept responsibility for the system design, construction, or installation of features, materials, components, or manufactured devices for the scope of work identified on this Certificate of Installation and attest to the declarations in this statement (responsible builder/installer), otherwise I am an authorized representative of the responsible builder/installer.
3. The constructed or installed features, materials, components or manufactured devices (the installation) identified on this Certificate of Installation conforms to all applicable codes and regulations, and the installation conforms to the requirements given on the plans and specifications approved by the enforcement agency.
4. I understand that a HERS rater will check the installation to verify compliance, and that if such checking identifies defects; I am required to take corrective action at my expense. I understand that Energy Commission and HERS Provider representatives will also perform quality assurance checking of installations, including those approved as part of a sample group but not checked by a HERS rater, and if those installations fail to meet the requirements of such quality assurance checking, the required corrective action and additional checking/testing of other installations in that HERS sample group will be performed at my expense.
5. I reviewed a copy of the Certificate of Compliance approved by the enforcement agency that identifies the specific requirements for the scope of construction or installation identified on this Certificate of Installation, and I have ensured that the requirements that apply to the construction or installation have been met.
6. I will ensure that a registered copy of this Certificate of Installation shall be posted, or made available with the building permit(s) issued for the building, and made available to the enforcement agency for all applicable inspections. I understand that a registered copy of this Certificate of Installation is required to be included with the documentation the builder provides to the building owner at occupancy.

Responsible Builder/Installer Name:	Responsible Builder/Installer Signature:	
Company Name: (Installing Subcontractor or General Contractor or Builder/Owner)	Position With Company (Title):	
Address:	CSLB License:	
City/State/Zip:	Phone	Date Signed:
Third Party Quality Control Program (TPQCP) Status:	Name of TPQCP (if applicable):	

For information and data collection only. Not valid until registered with a HERS provider

Instructions for ENV20e

Section A. Building Air Leakage – General Information

1. Select the appropriate test procedure. This selection will determine which version of this document will be used (a, b, c, d, or e) and therefore which data must be collected. Note that single-point tests can only be used under certain conditions. Note that newer manometers have automatic functions for compensating for baseline (automatic baseline) and compensating for house pressures other than the target (@50 Pa). It is preferable to use these, when available, however if these automatic functions are to be used, they must BOTH be used.
2. This number is automatically pulled from the performance approach Certificate of Compliance and is the target maximum that was entered by the documentation author. If this number cannot be achieved, the performance compliance calculations can be redone with a higher number or without the requirement for building air leakage.
3. Enter the indoor temperature measured at the time that the building air leakage test was performed.
4. Enter the outdoor temperature measured at the time that the building air leakage test was performed.
5. Provide a brief description of the location where the blower door was installed for the test. Examples: "front entry door on west side of house", "door between house and garage", "large window in family room".
6. Enter the building elevation use the value for the closest city found in Joint Appendix JA2.2. Only elevations higher than 5000 feet require an adjustment to the calculations.
7. This number is automatically pulled from the performance approach Certificate of Compliance. It is used to calculate air changes.
8. Enter the date that the building leakage test data was collected.

Section B. Diagnostic Equipment Information

1. Enter the number of blower door fan systems required to run simultaneously to pressurize the home for the building air leakage test. If more than one system is used, the fan flow numbers need to be manually added together, unless blower door software is used that will accommodate multiple fan systems running simultaneously.
2. Enter the appropriate information for each fan system used in the following rows.
3. Enter the make (brand) of the manometer used to collect the building air leakage data. Examples: Retrotec, Energy Conservatory.
4. Enter the model of the manometer used to collect the building air leakage data. Examples: DM-2 Mark II, DG700.
5. Enter the serial number of the manometer used to collect the building air leakage data.
6. Enter the most recent date that the manometer was calibrated by following manufacturer's calibration specifications.
7. This field is automatically filled. If the calibration date was more than 12 months prior to the test date entered in Row A.8, above, an error will appear.
8. Enter the make (brand) of the fan used to collect the building air leakage data. Examples: Retrotec, Energy Conservatory.
9. Enter the model of the fan used to collect the building air leakage data. Examples: US1000, Q46, BD3, BD4.
10. Enter the serial number of the fan used to collect the building air leakage data.

Section C. Envelope Leakage Test (specific to the ENV20e)

1. Enter the time average period used on the manometer during the test. Must be at least 10 seconds.
2. Enter the pre-test baseline building pressure reading.
3. If ASTM E779-10 compliant software is being used for the calculations, enter the name and version here. Otherwise, choose "none".
4. These are the numbered columns for the data points required for the test. There is a minimum of five and a maximum of nine data points required for this test.
5. This shows which data points are required or optional for this test. There is a minimum of five and a maximum of nine data points required for this test.
6. Enter the fan configuration (rings) that was used during the data acquisition. Examples: Ring A, Ring A1, Ring B2
7. Enter the induced building pressure from the manometer (automatic baseline feature turned on). It should be close to 50 Pa, but no less than 15 Pa.
8. Enter the Nominal CFM50 from the manometer (@50 Pa feature turned on).
9. This field is automatically calculated when using the online form. The equation used to calculate this value in the field equals ($C.8_1$+$C.8_2$+ $C.8_3$+ $C.8_4$+ $C.8_5$+$C.8_6$+ $C.8_7$+ $C.8_8$+ $C.8_9$)/N or the number of tests = Average Nominal CFM50

Section D. Altitude and Temperature Correction

1. This field is automatically calculated when using the online form. The equation used to calculate this value in the field equals:

For information and data collection only. Not valid until registered with a HERS Provider

a. If the elevation entered in Row A.6 ≤ 5,000 ft, then enter 1 as altitude correction in box D. 1
b. If the elevation entered in Row A.6 > 5,000 ft, altitude correction equation equals 1 + (0.000006 * A.6)

2. Enter the temperature correction factor from Table RA3.8-2 or RA3.8-3 using the indoor and outdoor temperatures entered in Rows A.3 and A.4.

Table RA3.8-2 ***Temperature Correction Factors for Depressurization Testing****- Calculated according to ASTM E779-10*

		Inside Temperature (F)								
		50	**55**	**60**	**65**	**70**	**75**	**80**	**85**	**90**
Outside Temp (F)	**-20**	1.062	1.072	1.081	1.090	1.099	1.108	1.117	1.127	1.136
	-15	1.056	1.066	1.075	1.084	1.093	1.102	1.111	1.120	1.129
	-10	1.051	1.060	1.069	1.078	1.087	1.096	1.105	1.114	1.123
	-5	1.045	1.054	1.063	1.072	1.081	1.090	1.099	1.108	1.117
	0	1.039	1.048	1.057	1.066	1.075	1.084	1.093	1.102	1.111
	5	1.033	1.042	1.051	1.060	1.069	1.078	1.087	1.096	1.105
	10	1.028	1.037	1.046	1.055	1.064	1.072	1.081	1.090	1.099
	15	1.023	1.031	1.040	1.049	1.058	1.067	1.076	1.084	1.093
	20	1.017	1.026	1.035	1.044	1.052	1.061	1.070	1.079	1.087
	25	1.012	1.021	1.029	1.038	1.047	1.056	1.064	1.073	1.082
	30	1.007	1.015	1.024	1.033	1.041	1.050	1.059	1.067	1.076
	35	1.002	1.010	1.019	1.028	1.036	1.045	1.054	1.062	1.071
	40	0.997	1.005	1.014	1.023	1.031	1.040	1.048	1.057	1.065
	45	0.992	1.000	1.009	1.017	1.026	1.035	1.043	1.051	1.060
	50	0.987	0.995	1.004	1.012	1.021	1.029	1.038	1.046	1.055
	55	0.982	0.990	0.999	1.008	1.016	1.024	1.033	1.041	1.050
	60	0.997	0.986	0.994	1.003	1.011	1.019	1.028	1.036	1.045
	65	0.973	0.981	0.989	0.998	1.006	1.015	1.023	1.031	1.040
	70	0.968	0.976	0.985	0.993	1.001	1.010	1.018	1.026	1.035
	75	0.963	0.972	0.980	0.988	0.997	1.005	1.013	1.022	1.030
	80	0.959	0.967	0.976	0.984	0.992	1.000	1.009	1.017	1.025
	85	0.955	0.963	0.971	0.979	0.988	0.996	1.004	1.012	1.020
	90	0.950	0.958	0.967	0.975	0.983	0.991	0.999	1.008	1.016
	95	0.946	0.954	0.962	0.970	0.979	0.987	0.995	1.003	1.011
	100	0.942	0.950	0.958	0.966	0.970	0.982	0.990	0.998	1.007
	105	0.938	0.946	0.954	0.962	0.970	0.978	0.986	0.994	1.002
	110	0.933	0.942	0.950	0.952	0.966	0.974	0.982	0.990	0.998

Table RA3.8-3 ***Temperature Correction Factors for Pressurization Testing****- Calculated according to ASTM E779-10*

		Inside Temperature (F)								
		50	**55**	**60**	**65**	**70**	**75**	**80**	**85**	**90**
Outside Temp (F)	**-20**	0.865	0.861	0.857	0.853	0.849	0.845	0.841	0.837	0.833
	-15	0.874	0.870	0.866	0.862	0.858	0.854	0.850	0.846	0.842
	-10	0.883	0.879	0.874	0.870	0.866	0.862	0.858	0.854	0.850
	-5	0.892	0.887	0.883	0.879	0.875	0.871	0.867	0.863	0.859
	0	0.900	0.896	0.892	0.887	0.883	0.879	0.875	0.871	0.867
	5	0.909	0.905	0.900	0.896	0.892	0.888	0.883	0.879	0.875
	10	0.918	0.913	0.909	0.905	0.900	0.896	0.892	0.888	0.884
	15	0.927	0.922	0.918	0.913	0.909	0.905	0.900	0.896	0.892
	20	0.935	0.931	0.926	0.922	09.17	0.913	0.909	0.905	0.900
	25	0.944	0.939	0.935	0.930	0.926	0.922	0.917	0.913	0.909
	30	0.952	0.948	0.943	0.939	0.934	0.930	0.926	0.921	0.917
	35	0.961	0.956	0.952	0.947	0.943	0.938	0.934	0.930	0.926
	40	0.970	0.965	0.960	0.956	0.951	0.947	0.942	0.938	0.934
	45	0.978	0.974	0.961	0.964	0.960	0.955	0.951	0.946	0.942
	50	0.987	0.982	0.977	0.973	0.968	0.963	0.959	0.955	0.950
	55	0.995	0.990	0.986	0.981	0.976	0.972	0.967	0.963	0.958
	60	1.004	0.999	0.994	0.998	0.985	0.980	0.976	0.971	0.967
	65	1.012	1.008	1.003	0.998	0.993	0.988	0.984	0.979	0.975
	70	1.021	1.016	1.011	1.006	1.001	0.997	0.992	0.988	0.983
	75	1.029	1.024	1.019	1.015	1.010	1.005	1.000	0.996	0.991
	80	1.038	1.033	1.028	1.023	1.018	1.013	1.009	1.004	0.999
	85	1.046	1.041	1.036	1.031	1.026	1.022	1.017	1.012	1.008
	90	1.055	1.050	1.045	1.040	1.035	1.030	1.025	1.020	1.016
	95	1.063	1.058	1.053	1.048	1.043	1.038	1.033	1.028	1.024
	100	1.072	1.066	1.061	1.056	1.051	1.046	1.041	1.037	1.032
	105	1.080	1.075	1.070	1.064	1.059	1.054	1.050	1.045	1.040
	110	1.088	1.083	1.078	1.073	1.068	1.063	1.058	1.053	1.048

3. This field is automatically calculated when using the online form. The equation used to calculate this value in the field equals the product of D.1 * D.2 * C.9.

For information only. Not valid until certification with a HERS rater.

Section E. Accuracy Adjustment (If Row C.3 = No)

1. This field is automatically calculated when using the online form. It is the standard deviation of the nominal CFM50 values from Rows $C.9_1$ through $C.9_9$. The equation used to calculate this value in the field equals the square root of {[(C.10- $C.9_1$)^2+(C.10- $C.9_2$)^2+(C.10- $C.9_3$)^2+(C.10- $C.9_4$)^2+(C.10- $C.9_5$)^2+(C.10- $C.9_6$)^2+(C.10- $C.9_7$)^2+(C.10- $C.9_8$)^2+(C.10- $C.9_9$)^2]/N-1 or the number of tests minus one} = standard deviation of the nominal CFM50.
2. This field is automatically calculated when using the online form. It is the percent uncertainty and the equation used to calculate this value in the field equals {[(C.1/ square root N or the number of tests)x t-statistic look up from table RA 3.8-1]/D.3 corrected CFM50} = percent uncertainty

Table 3.8-1 Precision Uncertainty: *Values of t-statistic*

Number of Readings	t-statistic
5	2.78
6	2.57
7	2.45
8	2.37
9	2.31

3. This field is automatically calculated when using the online form. The equation used to calculate this value in the field equals:
   a. If the percent uncertainty in E.2 ≤ 10, then enter "standard" as accuracy level in box E. 3
   b. If the percent uncertainty in E.2 > 10, then enter "reduced" as accuracy level in box E. 3
4. This field is automatically calculated when using the online form. The equation used to calculate this value in the field equals:
   a. If the accuracy level E.3 = Standard, then enter 1 as extending factor in box E.4
   b. If the accuracy level E.3 = Reduced, extending factor equation equals 1+(E.2/100)
5. This field is automatically calculated when using the online form. The equation used to calculate this value in the field equals the D.3 * E.4 = Adjusted CFM50

Section E. Accuracy Adjustment (If Row C.3 = Yes)

6. Enter the corrected CFM50 from manometer software.
7. Enter the percent uncertainty from manometer software.

For information and data collection only. Not valid until registered with a HERS provider

AIR INFILTRATION SEALING – FRAMING STAGE FOR BATT, LOOSE FILL, AND SPF

CERTIFICATE OF INSTALLATION		CF2R-ENV-21-H
Quality Insulation Installation (QII) –Air Infiltration Sealing - Framing Stage for Batt, Loose Fill, and SPF		(Page 1 of 3)
Project Name:	Enforcement Agency:	Permit Number:
Dwelling Address:	City	Zip Code

A.	AIR INFULTRATION AND INSULATION INSTALLATION (QII) - FRAMING STAGE
01	The requirements below cover the required air sealing and installation of insulation that must occur in the framing stage.
02	Spray Foam Insulation (SPF) can be considered an air barrier when SPF covers the possible leakage area to a thickness of 5.5 inches for open cell SPF (ocSPF) and 2.0 inches for closed cell SPF (ccSPF).
The responsible person's signature on this document indicates that the air sealing requirements above meets the installation criteria specified in Table A – AIR INFULTRATION AND INSULATION INSTALLATION (QII) - FRAMING STAGE.	

B.	RAISED FLOOR
01	All gaps in the raised floor are sealed.
02	All chases sealed at floor level using a hard cover and the hard covers are sealed.
03	All Plumbing and electrical wires that penetrate the floor are sealed.
04	Subfloor sheathing is glued or sealed at all exterior panel edges, to create a continuous air tight subfloor.
The responsible person's signature on this document indicates that the air sealing requirements above meets the installation criteria specified in Table B – RAISED FLOOR.	

C.	WALLS/KNEE WALLS
01	All penetrations through the exterior wall air barrier are sealed to provide an air-tight envelope to unconditioned spaces such as the outdoors, attic, garage and crawl space.
02	Exterior wall air barrier is sealed to the top plate and bottom plate in each stud bay.
03	All electrical boxes including knockouts that penetrate the air barrier to unconditioned space are sealed.
04	All openings in top and bottom plate, including all interior and exterior walls, to unconditioned space are sealed. Such as holes drilled for electrical and plumbing.
05	Exterior bottom plates (all stories) are sealed to the floor using the appropriate sealing method under the entire exterior bottom plate of the home.
06	All gaps around windows and doors are sealed. Proper sealant used was specified by window manufacturer.
07	Rim Joists all gaps/openings fully sealed.
08	Fan exhaust ducts that run between conditioned floors to exterior walls have a damper at the exterior wall.
09	Metal tie downs are insulated between exterior framing and tie down.
10	Insulation is installed in hard to access wall stud cavities, such as corner channels, wall intersections are insulated to the proper R-value prior to exterior sheathing, or the exterior stucco lath.
10	Insulation is installed behind tub, shower, fireplace enclosures, and exterior stairwells to the R-value listed on the CF1R when located against exterior walls. Insulation is required to be installed before tub, shower, and fireplace are installed.
11	A solid air barrier is installed on the interior wall from floor to ceiling before tub, shower, and fireplace enclosures are installed in exterior walls. Insulation in contact on all six sides of air barrier on exterior walls.
12	All window and door headers shall be insulated to a minimum of R-2 between the exterior face of the header and inside surface of the finish wall material.
13	Knee walls have solid and sealed blocking at the bottom, top, left side and right side of the knee wall.
The responsible person's signature on this document indicates that the air sealing requirements above meets the installation criteria specified in Table C – WALLS/KNEE WALLS.	

D.	CEILING/ATTIC
01	For vented attics much of the ceiling air barrier is verified after the ceiling drywall is installed using the ENV-22.
02	For non-vented attics ensure all penetrations through the roof deck and gable ends are sealed and air tight.
03	All eave vents are covered with a rigid ventilation baffle that maintains the Net free-ventilation area.
04	All dropped ceilings/soffits are covered with hard covers and sealed to framing.
05	All chases are covered with hard covers and sealed to framing.
06	HVAC ducts that travel down a chase the chase is sealed at the ceiling level.
07	Chimney's and Flue's require sheet metal flashing. The flashing shall be sealed to the chimney/flue with fire rated caulk. The flashing shall be sealed to the surrounding framing.
08	All Eave/soffit baffles are installed to stop air movement around the baffle and into insulation. Net free-ventilation of the eave/soffit shall be maintained.
09	Double walls that open to attic are covered with an air barrier and cover has an air tight seal to the framing.
The responsible person's signature on this document indicates that the air sealing requirements above meets the installation criteria specified in Table D – CEILING/ATTIC.	

For information and data collection only. Not valid until registered with a HERS provider

CERTIFICATE OF INSTALLATION		CF2R-ENV-21-H
Quality Insulation Installation (QII) –Air Infiltration Sealing - Framing Stage for Batt, Loose Fill, and SPF		(Page 2 of 3)
Project Name:	Enforcement Agency:	Permit Number:
Dwelling Address:	City	Zip Code

E. CONDITIONED SPACE ABOVE OR ADJACENT TO GARAGE AIR BARRIER		
01	All penetration in the subfloor above the garage into conditioned space must follow the raised floor air barrier requirements above.	
02	The builder needs to ensure infiltration does not enter the house between the space above the garage and subfloor. Select the option used below:	
03	[Yes or No]	(a) Edges are Sealed at the garage ceiling (typical drywall) at the perimeter of the garage to create a continuous air tight surface between the garage and adjacent conditioned envelope. Seal all plumbing, electric and mechanical penetrations between the garage and the adjacent conditioned space. For an open-web truss, airtight blocking is added on four sides of the garage perimeter. Insulation can be placed on the garage ceiling.
04	[Yes or No]	(b) Seal band joist above the wall at the garage to conditioned space transition. Seal all subfloor seams and penetrations between the conditioned space and the garage. Insulation must be placed in contact of subfloor below conditioned space.
The responsible person's signature on this document indicates that the air sealing requirements above meets the installation criteria specified in Table E – CONDITIONED SPACE ABOVE OR ADJACENT TO GARAGE AIR BARRIER.		

F. WALLS FOR ATTACHED PORCH, ATTIC, DOUBLE WALL	
01	All walls that separate conditioned and unconditioned space includes a continuous air barrier on the interior and exterior wall.
02	Exterior wall, air barrier required at the intersection of the porch and exterior wall when there is conditioned space on the other side. The exterior wall where the attic attaches to the conditioned space does includes an air barrier.
03	Truss framing blocking is used at the top and bottom of each wall/roof section.
The responsible person's signature on this document indicates that the air sealing requirements above meets the installation criteria specified in Table F – WALLS FOR ATTACHED PORCH, ATTIC, DOUBLE WALL.	

G. CANTILEVERED FLOOR AIR BARRIER	
01	Airtight blocking is installed between joists where the wall rim joist would have been located in the absence of a cantilever.
02	Exterior sheathing is installed to the bottom of the cantilever so that there is a continuous air and weather barrier for the cantilever. The cantilevered joist must be insulated to the same R value as would be required for the subfloor prior to closing.
03	Any gaps, cracks or penetrations in the air barrier of the cantilever are sealed. Can lights in the cantilever are IC and AT rated and properly sealed to sheathing.
The responsible person's signature on this document indicates that the air sealing requirements above meets the installation criteria specified in Table F – CANTILEVERED FLOOR AIR BARRIER.	

G. MULTIFAMILY AIR BARRIER	
01	Multifamily buildings must meet all air sealing requirements for single family buildings listed above.
02	Each dwelling unit must be air sealed to stop air movement from one unit to another.
03	Floor AND Ceiling of each Dwelling Unit: All penetrations through the floor and ceiling of each unit are sealed including, electric and gas utilities, water pipes, drain pipes, fire protection service pipes, communication wiring.
04	Elevator penthouse, mechanical penthouse, stairwell doors, roof access hatch, plumbing stacks sealed to reduce air transfer from attached spaces.
05	Common Walls: Bottom plate between units is sealed to the subfloor. All penetrations in the common walls are sealed including electrical boxes, wiring and plumbing penetrations. Perpendicular Interior walls that open into the common walls are sealed.
06	Vertical Chases for garbage chutes, elevator shafts, and HVAC ducting plumbing must be sealed to the floor and ceiling of each unit to stop air movement up and around the chase due to stack effect.
07	Vertical Chases for garbage chutes, elevator shafts, and HVAC ducting plumbing, wiring etc. must be sealed to stop air movement through the chase to the surrounding spaces.
08	Common Hallways must be sealed to stop air movement into dwelling units.
The responsible person's signature on this document indicates that the air sealing requirements above meets the installation criteria specified in Table G – MULTIFAMILY AIR BARRIER.	

For information and data collection only. Not valid until registered with a HERS provider

AIR INFILTRATION SEALING – FRAMING STAGE FOR BATT, LOOSE FILL, AND SPF

CERTIFICATE OF INSTALLATION		CF2R-ENV-21-H
Quality Insulation Installation (QII) –Air Infiltration Sealing - Framing Stage for Batt, Loose Fill, and SPF		(Page 3 of 3)
Project Name:	Enforcement Agency:	Permit Number:
Dwelling Address:	City	Zip Code

DOCUMENTATION AUTHOR'S DECLARATION STATEMENT	
1. I certify that this Certificate of Installation documentation is accurate and complete.	
Documentation Author Name:	Documentation Author Signature:
Documentation Author Company Name:	Date Signed:
Address:	CEA/HERS Certification Identification (If applicable):
City/State/Zip:	Phone:

RESPONSIBLE PERSON'S DECLARATION STATEMENT

I certify the following under penalty of perjury, under the laws of the State of California:

1. The information provided on this Certificate of Installation is true and correct.
2. I am eligible under Division 3 of the Business and Professions Code in the applicable classification to accept responsibility for the system design, construction, or installation of features, materials, components, or manufactured devices for the scope of work identified on this Certificate of Installation and attest to the declarations in this statement (responsible builder/installer), otherwise I am an authorized representative of the responsible builder/installer.
3. The constructed or installed features, materials, components or manufactured devices (the installation) identified on this Certificate of Installation conforms to all applicable codes and regulations, and the installation conforms to the requirements given on the plans and specifications approved by the enforcement agency.
4. I understand that a HERS rater will check the installation to verify compliance, and that if such checking identifies defects; I am required to take corrective action at my expense. I understand that Energy Commission and HERS Provider representatives will also perform quality assurance checking of installations, including those approved as part of a sample group but not checked by a HERS rater, and if those installations fail to meet the requirements of such quality assurance checking, the required corrective action and additional checking/testing of other installations in that HERS sample group will be performed at my expense.
5. I reviewed a copy of the Certificate of Compliance approved by the enforcement agency that identifies the specific requirements for the scope of construction or installation identified on this Certificate of Installation, and I have ensured that the requirements that apply to the construction or installation have been met.
6. I will ensure that a registered copy of this Certificate of Installation shall be posted, or made available with the building permit(s) issued for the building, and made available to the enforcement agency for all applicable inspections. I understand that a registered copy of this Certificate of Installation is required to be included with the documentation the builder provides to the building owner at occupancy.

Responsible Builder/Installer Name:	Responsible Builder/Installer Signature:	
Company Name: (Installing Subcontractor or General Contractor or Builder/Owner)	Position With Company (Title):	
Address:	CSLB License:	
City/State/Zip:	Phone	Date Signed:
Third Party Quality Control Program (TPQCP) Status:	Name of TPQCP (if applicable):	

For information and data collection only. Not valid until registered with a HERS provider.

AIR INFILTRATION SEALING – FRAMING STAGE FOR BATT, LOOSE FILL, AND SPF

CERTIFICATE OF INSTALLATION		CF2R-ENV-21-H
Quality Insulation Installation (QII) – Air Infiltration Sealing - Framing Stage for SIP and ICF		(Page 1 of 3)
Project Name:	Enforcement Agency:	Permit Number:
Dwelling Address:	City	Zip Code

If there are any traditional stick built exterior walls use the CF2R-ENV-21. For traditional stick built roof/ceiling use the CF2R-ENV-22 and 23.

A. INSTALLATION	
01	The R-value of all SIP/ICF products is the same or better than listed on the CF1R.
02	If modeled on the CF1R the density of the installed product is the same as installed.
03	SIP/ICF products have been installed per manufacturer installation instructions.
The responsible person's signature on this document indicates that the installed insulation meets the installation criteria specified in Table A – INSTALLATION.	

B. RAISED FLOOR	
01	All gaps in the raised floor are sealed.
02	All chases sealed at floor level using a hard cover and the hard covers are sealed.
03	All Plumbing and electrical wires that penetrate the floor must be sealed.
04	Subfloor sheathing is glued or sealed at all exterior panel edges, to create a continuous air tight subfloor.
The responsible person's signature on this document indicates that the installed insulation meets the installation criteria specified in Table B – RAISED FLOOR.	

C. WALLS	
01	Exterior walls are sealed to every floor on every story.
02	All gaps around windows and doors are sealed. Proper sealant used was as specified by window manufacturer.
03	All gaps around windows and doors are filled with insulation. Batt insulation is not allowed to be stuffed into gap.
04	All plumbing and wiring penetrations through the top and bottom of panels, and electrical boxes that penetrate the wall are sealed.
05	All SIP panel joints sealed at the interior of the wall and the exterior of each panel.
06	Fan exhaust ducts that run between conditioned floors to exterior walls must include a damper at the exterior wall.
06	Header sealed to wall with continues foam or caulk per manufacturer directions.
The responsible person's signature on this document indicates that the installed insulation meets the installation criteria specified in Table C – WALLS.	

D. SIP CEILING	
01	For vented attics use the CF2R-ENV-22.
02	For non-vented attics ensure all penetrations through the roof deck and gable ends are sealed and air tight.
The responsible person's signature on this document indicates that the installed insulation meets the installation criteria specified in Table D – SIP CEILING.	

E. CONDITIONED SPACE ABOVE OR ADJACENT TO GARAGE AIR BARRIER		
All penetration in the subfloor above the garage into conditioned space must follow the raised floor air barrier requirements above.		
01	The builder needs to ensure infiltration does not enter the house between the space above the garage and subfloor. Select the option used:	
02	[Y or No]	(a) Sealed all edges of garage ceiling (typical drywall) at the perimeter of the garage to create a continuous air tight surface between the garage and adjacent conditioned envelope. Seal all plumbing, electric and mechanical penetrations between the garage and the adjacent conditioned space on. For an open-web truss, airtight blocking must be added on four sides of the garage perimeter. Insulation can be placed on the garage ceiling.
03	[Y or No]	(b) Seal band joist above the wall at the garage to conditioned space transition. Seal all subfloor seams and penetrations between the conditioned space and the garage. Insulation must be placed in contact of subfloor below conditioned space.
The responsible person's signature on this document indicates that the installed insulation meets the installation criteria specified in Table E – CONDITIONED SPACE ABOVE OR ADJACENT TO GARAGE AIR BARRIER		

F. CANTILEVERED FLOOR AIR BARRIER	
01	Airtight blocking shall be installed between joists where the wall rim joist would have been located in the absence of a cantilever.
02	Exterior sheathing shall be installed to the bottom of the cantilever so that there is a continuous air and weather barrier for the cantilever. The cantilevered joist must be insulated to the same R-value as for the subfloor.
03	Any gaps, cracks or penetrations in the air barrier of the cantilever shall be sealed. Recessed down lights in the cantilever is IC and AT rated and properly sealed to sheathing.
The responsible person's signature on this document indicates that the installed insulation meets the installation criteria specified in Table F – CANTILEVERED FLOOR AIR BARRIER	

For information and data collection only. Not valid until registered with a HERS provider

CERTIFICATE OF INSTALLATION		CF2R-ENV-21-H
Quality Insulation Installation (QII) – Air Infiltration Sealing - Framing Stage for SIP and ICF		(Page 2 of 3)
Project Name:	Enforcement Agency:	Permit Number:
Dwelling Address:	City	Zip Code

G. MULTIFAMILY AIR BARRIER	
01	Multifamily buildings require all the above plus each unit must control air movement across envelope components separating each dwelling.
02	Floor AND Ceiling of each Dwelling Unit – All penetrations through the floor and ceiling of each unit must be sealed including, electric and gas utilities, water pipes, drain pipes, fire protection service pipes, communication wiring etc.
03	Elevator penthouse, mechanical penthouse, stairwell doors, roof access hatch, plumbing stacks etc. sealed to reduce air transfer from attached spaces.
04	Common Walls – Bottom plate between units must be sealed to the subfloor. All penetration in the common walls is sealed. Interior walls that open into the common walls must be sealed.
05	Vertical Chases – All vertical chases are sealed at the floor and ceiling of each unit so air cannot transfer from first floor to second floor around chase.
06	Vertical Chases –The chases such as garbage chutes, elevator shafts, and HVAC ducting are sealed to stop air movement through the chase to surrounding spaces.
07	Common Hallways – Penetrations between dwelling unit and common hallways are sealed including doors to the dwelling unit are gasketed or made substantially airtight.
The responsible person's signature on this document indicates that the installed insulation meets the installation criteria specified in Table G – MULTIFAMILY AIR BARRIER	

For information and data collection only. Not valid until registered with a HERS provider

AIR INFILTRATION SEALING – FRAMING STAGE FOR BATT, LOOSE FILL, AND SPF

CERTIFICATE OF INSTALLATION		CF2R-ENV-21-H
Quality Insulation Installation (QII) – Air Infiltration Sealing - Framing Stage for SIP and ICF		(Page 3 of 3)
Project Name:	Enforcement Agency:	Permit Number:
Dwelling Address:	City	Zip Code

DOCUMENTATION AUTHOR'S DECLARATION STATEMENT	
1. I certify that this Certificate of Installation documentation is accurate and complete.	
Documentation Author Name:	Documentation Author Signature:
Documentation Author Company Name:	Date Signed:
Address:	CEA/HERS Certification Identification (If applicable):
City/State/Zip:	Phone:

RESPONSIBLE PERSON'S DECLARATION STATEMENT

I certify the following under penalty of perjury, under the laws of the State of California:

1. The information provided on this Certificate of Installation is true and correct.
2. I am eligible under Division 3 of the Business and Professions Code in the applicable classification to accept responsibility for the system design, construction, or installation of features, materials, components, or manufactured devices for the scope of work identified on this Certificate of Installation and attest to the declarations in this statement (responsible builder/installer), otherwise I am an authorized representative of the responsible builder/installer.
3. The constructed or installed features, materials, components or manufactured devices (the installation) identified on this Certificate of Installation conforms to all applicable codes and regulations, and the installation conforms to the requirements given on the plans and specifications approved by the enforcement agency.
4. I understand that a HERS rater will check the installation to verify compliance, and that if such checking identifies defects; I am required to take corrective action at my expense. I understand that Energy Commission and HERS Provider representatives will also perform quality assurance checking of installations, including those approved as part of a sample group but not checked by a HERS rater, and if those installations fail to meet the requirements of such quality assurance checking, the required corrective action and additional checking/testing of other installations in that HERS sample group will be performed at my expense.
5. I reviewed a copy of the Certificate of Compliance approved by the enforcement agency that identifies the specific requirements for the scope of construction or installation identified on this Certificate of Installation, and I have ensured that the requirements that apply to the construction or installation have been met.
6. I will ensure that a registered copy of this Certificate of Installation shall be posted, or made available with the building permit(s) issued for the building, and made available to the enforcement agency for all applicable inspections. I understand that a registered copy of this Certificate of Installation is required to be included with the documentation the builder provides to the building owner at occupancy.

Responsible Builder/Installer Name:	Responsible Builder/Installer Signature:	
Company Name: (Installing Subcontractor or General Contractor or Builder/Owner)	Position With Company (Title):	
Address:	CSLB License:	
City/State/Zip:	Phone	Date Signed:
Third Party Quality Control Program (TPQCP) Status:	Name of TPQCP (if applicable):	

For information only. Data collected at HERS provider. Not valid until registered with a

AIR INFILTRATION SEALING – CEILING/ROOF DECK

CERTIFICATE OF INSTALLATION		CF2R-ENV-22-H
Quality Insulation Installation (QII) - Air Infiltration Sealing - Ceiling/Roof Deck		(Page 1 of 2)
Project Name:	Enforcement Agency:	Permit Number:
Dwelling Address:	City	Zip Code

For typical vented attics where the insulation is at the roof deck ceiling air barrier must be verified after the ceiling drywall is installed and before attic insulation is installed. If SPF will be used in the attic this can be considered the air barrier. Soffit and chase's must still be covered and chimneys and flues require metal flashing. Buildings with a Non vented attic all air sealing requirements appropriate for the roof must be verified.

A. CEILING INSPECTION – Vented Attics	
01	There is a continuous air barrier at the ceiling level. All opening into walls, drops, chasses, double walls are sealed. Examples are below.
02	Chimney's and Flue's require sheet metal flashing. The flashing shall be sealed to the chimney/flue with fire rated caulk. The flashing shall be sealed to the surrounding framing.
3	All penetration through the top plate of interior and exterior walls are sealed.
04	Electrical boxes, fire alarm boxes, fire sprinklers, cut into ceiling are sealed to the surrounding drywall and all gaps in the box are sealed. If not possible to seal fixture directly a secondary air barrier was created around the fixture.
05	All installed recessed light fixtures that penetrate the ceiling to unconditioned space are rated to be Insulation Contact and Air Tight (IC and AT) which allows direct contact with insulation. Housing is sealed to the drywall.
06	Exhaust fan housing is sealed to surrounding drywall and all holes and seams in the housing sealed.
07	All soffits and chases are covered with a hard cover that is sealed to the framing with caulk or foam.
08	Double walls that open to attic are covered and the cover sealed to the framing.
09	Attic Access forms airtight seal from conditioned space to unconditioned space. Vertical attic access requires mechanical compression using screws, or latches.
10	Knee walls require solid and sealed blocking at the bottom, top left side and right side of the knee wall. When the knee wall is placed on top of a subfloor the open cavity below the subfloor and the ceiling below are sealed.
11	HVAC ducts that travel down a chase the chase are sealed at the ceiling level.
12	HVAC boots that penetrate the ceiling are sealed to the surrounding drywall.
13	All top plates of interior and exterior walls sealed to drywall.
16	Attic access must be surrounded with a dam at least the same depth as the insulation to prevent loss of ceiling insulation.
17	There must be a dam placed at the exterior edge of all kneewalls and all edges of insulation to stop air movement through insulation.
The responsible person's signature on this document indicates that the air sealing requirements above meets the installation criteria specified in Table A – CEILING INSPECTION – Vented Attics.	

B. ROOF INSPECTION – Non vented attics	
01	There is a continuous air barrier at the roof deck and gable ends.
02	Chimney's and Flue's require sheet metal flashing at the roof deck. The flashing is sealed to the chimney/flue with fire rated caulk. The flashing is sealed to the surrounding framing.
03	All penetrations for plumbing, electrical etc in the roof deck and gable ends are sealed.
The responsible person's signature on this document indicates that the air sealing requirements above meets the installation criteria specified in Table B – ROOF INSPECTION – Non vented attics.	

For information and data collection only. Not valid until registered with a HERS provider

CERTIFICATE OF INSTALLATION		CF2R-ENV-22-H
Quality Insulation Installation (QII) - Air Infiltration Sealing - Ceiling/Roof Deck		(Page 2 of 2)
Project Name:	Enforcement Agency:	Permit Number:
Dwelling Address:	City	Zip Code

DOCUMENTATION AUTHOR'S DECLARATION STATEMENT

1. I certify that this Certificate of Installation documentation is accurate and complete.

Documentation Author Name:	Documentation Author Signature:
Documentation Author Company Name:	Date Signed:
Address:	CEA/HERS Certification Identification (If applicable):
City/State/Zip:	Phone:

RESPONSIBLE PERSON'S DECLARATION STATEMENT

I certify the following under penalty of perjury, under the laws of the State of California:

1. The information provided on this Certificate of Installation is true and correct.
2. I am eligible under Division 3 of the Business and Professions Code in the applicable classification to accept responsibility for the system design, construction, or installation of features, materials, components, or manufactured devices for the scope of work identified on this Certificate of Installation and attest to the declarations in this statement (responsible builder/installer), otherwise I am an authorized representative of the responsible builder/installer.
3. The constructed or installed features, materials, components or manufactured devices (the installation) identified on this Certificate of Installation conforms to all applicable codes and regulations, and the installation conforms to the requirements given on the plans and specifications approved by the enforcement agency.
4. I understand that a HERS rater will check the installation to verify compliance, and that if such checking identifies defects; I am required to take corrective action at my expense. I understand that Energy Commission and HERS Provider representatives will also perform quality assurance checking of installations, including those approved as part of a sample group but not checked by a HERS rater, and if those installations fail to meet the requirements of such quality assurance checking, the required corrective action and additional checking/testing of other installations in that HERS sample group will be performed at my expense.
5. I reviewed a copy of the Certificate of Compliance approved by the enforcement agency that identifies the specific requirements for the scope of construction or installation identified on this Certificate of Installation, and I have ensured that the requirements that apply to the construction or installation have been met.
6. I will ensure that a registered copy of this Certificate of Installation shall be posted, or made available with the building permit(s) issued for the building, and made available to the enforcement agency for all applicable inspections. I understand that a registered copy of this Certificate of Installation is required to be included with the documentation the builder provides to the building owner at occupancy.

Responsible Builder/Installer Name:	Responsible Builder/Installer Signature:	
Company Name: (Installing Subcontractor or General Contractor or Builder/Owner)	Position With Company (Title):	
Address:	CSLB License:	
City/State/Zip:	Phone	Date Signed:
Third Party Quality Control Program (TPQCP) Status:	Name of TPQCP (if applicable):	

For information and data collection only. Not valid until registered with a HERS provider

CERTIFICATE OF INSTALLATION		CF2R-ENV-23-H
Quality Insulation Installation (QII) - Insulation Stage		(Page 1 of 4)
Project Name:	Enforcement Agency:	Permit Number:
Dwelling Address:	City	Zip Code

A. QUALITY INSULATION INSTALLATION (QII) INSULATION STAGE	
01	Insulation shall be installed to the requirements of Reference Residential Appendices, RA 3.5.
02	Air barrier installation and preparation for insulation was done at framing stage prior to insulation being installed
03	All structural framing areas shall be insulated in a manner that resists thermal bridging of the assembly separating conditioned from unconditioned space. Structural bracing, tie-downs, and framing of steel, or specialized framing used to meet structural requirements of the CBC are allowed and must be insulated. These areas shall be called out on the building plans with diagrams and/or specific design drawings indicating the R-value of insulation and fastening method to be used. It is recommended that spray foam be use.
04	Medium and light density Spray Foam (SPF) manufacturers claim various R-values per inch. In California the maximum R-value that can be claimed for close cell SPF (ccSPF) is an R-value of 5.8 per inch and for open cell SPF (ocSPF) is an R-value of 3.6 per inch, unless documentation is provided showing that the product and/or manufacturer has a current ICC Evaluation Service Report (ESR) that shows compliance with *Acceptance Criteria for Spray-Applied Foam Plastic Insulation--AC377*.
05	All insulation was installed to the manufactures insulation installation instructions.
The responsible person's signature on this document indicates that the installed insulation meets the installation criteria specified in Table A – QUALITY INSULATION INSTALLATION (QII) INSULATION STAGE.	

B. QUALITY OF ALL INSTALLED INSULATION	
01	Installed insulation R-values is the same or greater than specified on the CF1R.
02	No gaps or voids between the insulation and framing.
03	Gaps between studs shall be filled with insulation.
04	Batt - ensure the ends are cut so there are no gaps.
05	Batt - Insulation is cut around obstructions like electrical boxes and no gaps exist.
06	Batt - insulation is not compressed (no stuffing of the insulation into the cavity).
07	Batt insulation is delaminated around all plumbing and electrical lines in ceilings, walls and floors.
08	An air barrier is installed at all exposed edge of insulation.
09	Loose-fill insulation installed to the minimum installed weight per square foot per the manufacturer's labeled R-value specification.
10	Rigid board insulation shall be installed according to the manufacturer's installation instructions.
11	SPF insulation shall be spray-applied to fully adhere to structural assembly framing, floor and ceiling joists, and other framing surfaces within the construction cavity.
12	SPF - with multiple layers applied, each foam lift (i.e. spray application) adheres to the substrate and foam interfaces.
13	SPF - if values other than R-5.8 per inch for ccSPF and R-3.6 per inch for ocSPF is used, then an ICC Evaluation Service Report (ESR) is attached and uploaded to the HERS provider's web site.
14	ccSPF - in areas where an air barrier is required the foam is at least two inches thick.
15	ocSPF depressions in the foam insulation surface is not greater than 1-inch of the required thickness provided these depressions do not exceed 10% of the surface area being insulated.
16	ocSPF insulation does completely fill cavities of 2x4 inch framing or less.
17	ocSPF cavities greater than 2x4 inch framing are filled to the thickness that meets the required R-value used for compliance.
18	SPF installed as an air barrier is sprayed at a minimum of 5.5 inches in thickness for open cell and 2.0 inches for closed cell.
The responsible person's signature on this document indicates that the installed insulation meets the installation criteria specified in Table B – QUALITY OF ALL INSTALLED INSUALTION.	

C. CEILING/ROOF INSULATION	
01	Insulation extends to the outside edge of the exterior top plates and is flush against any ventilation dams/baffles.
02	Insulation is in direct contact with ceiling so there are no gaps between the ceiling and the insulation.
03	Chimneys and flues (except for zero clearance) require sheet metal collar around the stack. The collar must be at least as tall as the depth of the insulation. The collar shall be 1" from the chimney/flue for double wall vent, and 6" from the chimney/flue for single wall vent" unless manufacturer requires otherwise. The collar must be sealed to the ceiling with high temperature sealant to prevent air leakage. The insulation is in contact with the sheet metal collar.
04	Required eave ventilation shall not be obstructed - the net free-ventilation area of the eave vent is maintained
05	Eave vent baffles are installed to prevent air movement under or into the ceiling insulation
06	Recessed downlights are covered with insulation to the same depth as required by the CF1R for ceiling insulation. If not an area weighted calculation is required. Recessed downlights are AT and IC rated.
07	Recessed downlights where SPF insulation is installed shall: (Note: SPF insulation shall not be applied directly to recessed lighting fixtures) (a) be covered with a minimum of 1.5 inches of mineral fiber insulation, or (b) be enclosed in a box fabricated from 1/4 inch plywood, 18 gauge metal, 3/8 inch hard board or gypboard. Hard board or gypboard

Information and data collection only, not valid until registered with a HERS provider

CERTIFICATE OF INSTALLATION		CF2R-ENV-23-H
Quality Insulation Installation (QII) - Insulation Stage		(Page 2 of 4)
Project Name:	Enforcement Agency:	Permit Number:
Dwelling Address:	City	Zip Code

	do not cause a recessed downlights to meet the zero clearance insulation contact requirements.
08	Walkways and mechanical platforms are insulated to the same R-value as required by the CF1R for ceiling insulation. If not an area weighted calculation is completed and turned in with this form.
09	Soffits, chasses, drops have a sealed hard cover and the insulation is in direct contact with the hard cover.
10	Knee walls – an air dam the full depth of the ceiling insulation is added to the exterior edge of the knee wall so the ceiling insulation overlaps the knee wall to the full depth of the ceiling insulation.
11	Attic access doors are insulated to the same R-value required by the CF1R for roof insulation and the insulation is permanently attached using adhesive or mechanical fasteners. Preferred method is rigid insulation.
12	Attic Access forms airtight seal from conditioned space to unconditioned space. Vertical attic access requires mechanical compression using screws, or latches.
13	Attic access must have a dam around the access to at least the same depth as the insulation.
14	Insulation batts must be cut to fit around cross bracings and truss webs.
15	Attic rulers appropriate to the material are installed and evenly distributed throughout the attic to verify Depth (one ruler for every 250 square feet) The rulers are clearly readable from the attic access and scaled to read inches of insulation and the R-value installed.
16	Loose fill and SPF insulation a HERS rater shall measure the installed thickness (include low and high areas) and density of insulation in at least 6 random locations on walls, roof/ceilings and floors to ensure minimum thickness levels and the installed density meets the R-value specified on the Certificate of Compliance, and are consistent with the manufacturer's coverage chart.
17	Steel-framed kneewalls, skylight shafts, and gable ends, external surfaces of steel studs are covered with insulation
The responsible person's signature on this document indicates that the installed insulation meets the installation criteria specified in Table C – CEILING/ROOF INSULATION.	

D. WALL INSULATION	
1	**Batts, loose fill mineral fiber, mineral and natural wool, and cellulose:** fills cavity and is in contact with air barrier on six sides.
2	**ocSPF:** completely fill cavities of 2x4 inch framing or less. Not required to fill cavities greater than 2x4 inch framing unless required to meet R-value.
3	**ccSPF:** insulation is not required to fill the cavities of framed assemblies unless required to meet R-value.
4	**Double walls and bump-outs** - insulation fills the cavity, or additional air barrier is installed so the insulation fills the cavity and is in contact with the insulation on all six sides unless SPF is used. Insulation shall be installed on the exterior of the double walls/bump-outs.
5	Low expanding foam used around windows and doors, if allowed by the manufacturer. If not allowed fill cavity with insulation. Batts are not allowed to be stuffed into space.
6	Electrical panel in exterior insulated wall the panel is air tight and insulation is installed behind the panel.
7	Skylight shafts and attic knee wall insulation must meet all the requirements for walls and is in contact with the air barrier on six sides unless SPF is used.
12	Skylight shafts and attic kneewalls insulation shall be in full contact with the drywall or other interior wall finish. Batt insulation must be cut to fit around 2x4's that are laid flat.
13	Skylight shafts and attic kneewalls shall be completely enclosed by vertical and horizontal framing, including horizontal plates at top and bottom of the insulation.
14	Band/Rim joists are insulated to the same R-value as the wall.
The responsible person's signature on this document indicates that the installed insulation meets the installation criteria specified in Table D – WALL INSULATION.	

E. RAISED FLOOR INSULATION QUALITY	
1	Insulation is in full contact with subfloor.
2	Insulation hangers are spaced at 18 inches or less, insulation hangers do not compress insulation.
3	Netting or mesh can be used if the cavity under the floor is filled and in contact with the subfloor.
4	When daylight basements are adjacent to crawlspaces, if the basement is conditioned the walls adjacent to the crawlspace are insulated to the R-value listed on the CF1R. This includes framed stem walls, and vertical concrete retaining walls.
5	If access to the crawlspace is from the conditioned area the raised floor includes an airtight insulated access hatch. Where possible locate crawl space access from the exterior.
The responsible person's signature on this document indicates that the installed insulation meets the installation criteria specified in Table E – RAISED FLOOR INSULATION QUALITY.	

For information and data collection only. Not valid until registered with a HERS provider.

CERTIFICATE OF INSTALLATION		CF2R-ENV-23-H
Quality Insulation Installation (QII) - Insulation Stage		(Page 3 of 4)
Project Name:	Enforcement Agency:	Permit Number:
Dwelling Address:	City	Zip Code

F. FLOOR ABOVE GARAGE INSULATION QUALITY	
1	Insulation must be in full contact with subfloor if the air barrier is at the band joist at the garage house wall.
2	Insulation hangers spaced at 18 inches or less, insulation hangers must not compress insulation.
3	Netting or mesh can be used if the cavity under the floor is filled and in contact with the subfloor.
4	If air barrier is at the perimeter of the garage below the conditioned subfloor then the insulation may be placed on the garage ceiling. Perimeter of subfloor must also be insulated.
The responsible person's signature on this document indicates that the installed insulation meets the installation criteria specified in Table F – FLOOR ABOVE GARAGE INSULATION QUALITY.	

G. CANTILEVERED FLOOR INSULATION QUALITY	
1	Insulation is in full contact with cantilevered subfloor. Insulation hangers are spaced at 18 inches or less, insulation hangers do not compress insulation. Netting or mesh can be used if the cavity under the floor is filled and in contact with the subfloor.
2	Sealed Blocking shall be installed between joists where the wall rim joist would have been located in the absence of a cantilever. Insulation shall be placed on both sides of this block.
The responsible person's signature on this document indicates that the installed insulation meets the installation criteria specified in Table G – ANTILEVERED FLOOR INSULATION QUALITY.	

H. ATTACHED PORCH ROOF INSULATION QUALITY	
1	Exterior wall at the intersection of the porch roof is fully insulated above, below and behind the roof line.
2	Where truss framing is used, airtight blocking is used at the top and bottom of each wall/roof section and insulated.
The responsible person's signature on this document indicates that the installed insulation meets the installation criteria specified in Table H – ATTACHED PORCH ROOF INSULATION QUALITY	

For information and data collection only. Not valid until registered with a HERS provider

CERTIFICATE OF INSTALLATION		CF2R-ENV-23-H
Quality Insulation Installation (QII) - Insulation Stage		(Page 4 of 4)
Project Name:	Enforcement Agency:	Permit Number:
Dwelling Address:	City	Zip Code

DOCUMENTATION AUTHOR'S DECLARATION STATEMENT

1. I certify that this Certificate of Installation documentation is accurate and complete.

Documentation Author Name:	Documentation Author Signature:
Documentation Author Company Name:	Date Signed:
Address:	CEA/HERS Certification Identification (If applicable):
City/State/Zip:	Phone:

RESPONSIBLE PERSON'S DECLARATION STATEMENT

I certify the following under penalty of perjury, under the laws of the State of California:

1. The information provided on this Certificate of Installation is true and correct.
2. I am eligible under Division 3 of the Business and Professions Code in the applicable classification to accept responsibility for the system design, construction, or installation of features, materials, components, or manufactured devices for the scope of work identified on this Certificate of Installation and attest to the declarations in this statement (responsible builder/installer), otherwise I am an authorized representative of the responsible builder/installer.
3. The constructed or installed features, materials, components or manufactured devices (the installation) identified on this Certificate of Installation conforms to all applicable codes and regulations, and the installation conforms to the requirements given on the plans and specifications approved by the enforcement agency.
4. I understand that a HERS rater will check the installation to verify compliance, and that if such checking identifies defects; I am required to take corrective action at my expense. I understand that Energy Commission and HERS Provider representatives will also perform quality assurance checking of installations, including those approved as part of a sample group but not checked by a HERS rater, and if those installations fail to meet the requirements of such quality assurance checking, the required corrective action and additional checking/testing of other installations in that HERS sample group will be performed at my expense.
5. I reviewed a copy of the Certificate of Compliance approved by the enforcement agency that identifies the specific requirements for the scope of construction or installation identified on this Certificate of Installation, and I have ensured that the requirements that apply to the construction or installation have been met.
6. I will ensure that a registered copy of this Certificate of Installation shall be posted, or made available with the building permit(s) issued for the building, and made available to the enforcement agency for all applicable inspections. I understand that a registered copy of this Certificate of Installation is required to be included with the documentation the builder provides to the building owner at occupancy.

Responsible Builder/Installer Name:	Responsible Builder/Installer Signature:	
Company Name: (Installing Subcontractor or General Contractor or Builder/Owner)	Position With Company (Title):	
Address:	CSLB License:	
City/State/Zip:	Phone	Date Signed:
Third Party Quality Control Program (TPQCP) Status:	Name of TPQCP (if applicable):	

For information and data collection only. Not valid until registered with a HERS Provider

CERTIFICATE OF INSTALLATION		CF2R-LTG-01-E
Lighting – Single Family Dwellings		(Page 1 of 4)
Project Name:	Enforcement Agency:	Permit Number:
Dwelling Address:	City	Zip Code

A. Does the scope of this project include (select Yes or No to the following options):		
01	Controls for any interior or outdoor lighting	
02	Luminaires in any interior room or outdoor	
03	luminaires recessed into ceilings	
04	Light Emitting Diode (LED) luminaires	
05	Kitchen lighting scope.	
06	Lighting internal to cabinets	
07	Bathroom lighting	
08	Lighting in garages, laundry rooms, or bathrooms	
09	Lighting in rooms other than a kitchen, bathroom, garage, laundry room, or and utility room	
10	Outdoor lighting for single family residential	
11	Internally illuminated address signs	
12	Garages for 8 or more vehicles	

B. Lighting Controls	
01	150.0(k)2A: High efficacy luminaires are switched separately from low efficacy luminaires.
02	150.0(k)2B: Exhaust fans are switched separately from lighting systems, or can be switched OFF in accordance with EXCEPTION
03	150.0(k)2C: Luminaires are switched with readily accessible controls that permit luminaires to be manually switched ON and OFF
04	150.0(k)2D: Lighting controls and equipment are installed in accordance with manufacturer's instructions
05	150.0(k)2E: No controls are installed that bypass a dimmer or vacancy sensor function where that dimmer or vacancy sensor has been installed to comply with Section 150.0(k)
06	150.0(k)2F: Lighting controls comply with the applicable requirements in Section 110.9; Certified to the Energy Commission as applicable
07	150.0(k)2G: EMCS used to comply with dimmer requirements provides the functionality of a dimmer in accordance with Section 110.9, meets the installation certificate requirements in Section 130.4, the EMCS requirements in Section 130.5, and complies with all other applicable requirements in Section 150.0(k)2.
08	150.0(k)2H: EMCS used to comply with vacancy sensor requirements in Section 150.0(k) provides the functionality of a vacancy sensor in accordance with Section 110.9, meets the installation certificate requirements in Section 130.4, the EMCS requirements in Section 130.5, and complies with all other applicable requirements in Section 150.0(k)2.
09	150.0(k)2I: A multi-scene programmable controller used to comply with dimmer requirements provides the functionality of a dimmer in accordance with Section 110.9, and complies with all other applicable requirements in Section 150.0(k)2.
By signing this document the installer certifies that the requirements above have been met.	

C. Luminaires (Lighting Fixtures)	
01	150.0(k)1(A-C): For compliance with Section 150.0(k), all installed luminaires have been classified as high efficacy or low efficacy in accordance with the applicable requirements in Section 130.0(c), and in accordance with TABLE 150.0-A or TABLE 150.0-B
02	150.0(k)1D: Ballasts for fluorescent lamps rated 13 watts or greater are electronic.
03	150.0(k)1E: Night lights are rated to consume no more than five watts of power
04	150.0(k)1F: Lighting integral to exhaust fans meets all applicable requirements of Section 150.0(k)
05	By signing this document the installer certifies that the requirements above have been met.

This Table is applicable only if recessed lighting is selected in Table A above

D. Recessed Luminaires	
01	150.0(k)8A: Listed for zero clearance insulation contact (IC)
02	150.0(k)8B: Has label certifying air tight
03	150.0(k)8C: Sealed with a gasket or caulk between the luminaire housing and ceiling, and all air leak paths between conditioned and unconditioned spaces are sealed with a gasket or caulk; and
04	150.0(k)8D: Ballasts for compact fluorescent luminaires certified to the Commission in accordance with Section 110.9; and
05	150.0(k)8E: Allows ballast maintenance and replacement to be readily accessible to building occupants from below the ceiling without requiring the cutting of holes in the ceiling.
6	By signing this document the installer certifies that the requirements above have been met.

This Table is applicable only if LED lighting is selected in Table A above

E. LED Luminaires	
01	TABLE 150.0-A: The LED luminaires are classified as low efficacy because they have NOT been Certified to the Energy Commission, or they do not comply with all of the following requirements, as applicable: Sections 110.9(e), 130.0(c)9, 150.0(k)1A, TABLE 150.0-A, and

For information and data collection only. Not valid until registered with a HERS provider

	Reference Joint Appendix JA8.
02	150.0(k)1A: The LED luminaires are classified as high efficacy because they ARE Certified to the Energy Commission by the manufacturer in accordance with all of the following requirements, as applicable: Sections 110.9(e), 130.0(c)9, 150.0(k)1A, TABLE 150.0-A, and Reference Joint Appendix JA8.
03	By signing this document the installer certifies that the requirements above have been met.

This Table is applicable only if Kitchen lighting is selected in Table A above

F. Kitchen Lighting	
01	150.0(k)1C: The wattage of permanently installed luminaires determined as specified in Section 130.0(c).
02	150.0(k)1C: In the kitchen, wattage calculated as 180 watts of low efficacy lighting per blank electrical boxes finished with a blank cover.
03	Method <(a), (b), or (c) as selected above> from Section 150(k)3A: Compliance demonstrated using Method (a) because only high efficacy luminaires have been installed in the kitchen. Compliance demonstrated using Method (b). At least 50% of the installed watts from permanently installed high efficacy. Total A ≥ Total B in Installed Wattage Calculation Table (below) Compliance demonstrated with additional low efficacy wattage allowance of EXCEPTION to 150(k)3
04	<If method (c) is selected, this additional field will be displayed> EXCEPTION to 150.0(k)3: Additional low efficacy watts may be allowed when all luminaires in the kitchen are controlled by a vacancy sensor or dimmers, and 1. See 150.0(k)2A where high efficacy and low efficacy luminaires must be separately controlled. 2. See 150.0(k)2G where EMCS may be used as a dimmer; Section 150.0(k)2H where EMCS may be used as a vacancy sensor; or, 150.0(k)2I where multi-scene programmable controller may be used as a dimmer. NOTES: Compliance demonstrated using Method (c). Kitchen lighting qualifies for additional low efficacy lighting and as demonstrated in Installed Wattage Calculation Table in Method (b) (above) in addition to Additional Low Efficacy Wattage Calculation Table (below).
05	By signing this document the installer certifies that the requirements for kitchen lighting wattage allowances have been met.

This Table is applicable only if Kitchen Lighting using Method (b) or (c) is selected in Table A above

Method (b) Total Wattage Calculation								
Fixture						Total Watts		
	High	Low				High		Low
Luminaire Type	Efficacy Watts	Efficacy Watts		Quantity		Efficacy		Efficacy
			x		=	0		0
			x		=	0		0
			x		=	0		0
			x		=	0		0
			x		=	0		0
			x		=	0		0
	Complies with method (b) if Total A ≥ Total B					0		0
						A	≥	B

This Table is applicable only if Kitchen Lighting using Method (c) is selected in Table A above

Method (c) Total Additional Low Efficacy Wattage Calculation					
			(see footnote)		
Watts From Method (b)			Additional		
High	Low		Watts		Total Low Efficacy
Efficacy	Efficacy		Low Efficacy		Watts Allowd
0	0		0		0
1. Insert 50 if house is ≤ 2,500 square feet; Insert 100 if house is > 2,500 square feet.					

For information and data collection only. Not valid until registered with a HERS provider

CERTIFICATE OF INSTALLATION		CF2R-LTG-01-E
Lighting – Single Family Dwellings		(Page 3 of 4)
Project Name:	Enforcement Agency:	Permit Number:
Dwelling Address:	City	Zip Code

This Table is applicable only if Internal Cabinet lighting is selected in Table A above

G. Lighting Internal to Cabinets	
01	150.0(k)4: Permanently installed lighting internal to cabinets uses ≤ 20 watts of power per linear foot of illuminated cabinet.
02	By signing this document the installer certifies that the requirements above have been met.

This Table is applicable only if bathroom lighting is selected in Table A above

H. Lighting in Bathrooms	
01	150.0(k)5A: A minimum of one high efficacy luminaire is installed in each bathroom; and
02	150.0(k)5B: All other lighting installed in each bathroom is high efficacy or controlled by vacancy sensors.
03	By signing this document the installer certifies that the requirements above have been met.

This Table is applicable only if garage, laundry room and utility room lighting is selected in Table A above

I. Lighting in Garages, Laundry Rooms, and Utility Rooms	
01	150.0(k)6: All installed luminaires are high efficacy AND controlled by vacancy sensors
02	By signing this document the installer certifies that the requirements above have been met.

This Table is applicable only if lighting in rooms other than garage, laundry room and utility room lighting is selected in Table A above

J. Lighting other than in Kitchens, Bathrooms, Garages, Laundry Rooms, and Utility Rooms	
01	150.0(k)7: Installed lighting is high efficacy
02	150.0(k)7: Installed lighting is low efficacy and controlled by dimmers or vacancy sensors
03	150.0(k)7: Exempt lighting is in closets that are < 70 sq ft.
04	150.0(k)7: Exempt lighting is in detached storage buildings that are < 1,000 sq ft.
05	By signing this document the installer certifies that the requirements above have been met.

This Table is applicable only if internally illuminated address signs is selected in Table A above

K. Address Signs	
01	150.0(k)10A: Internally illuminated address signs. Internally illuminated address signs shall (Select option A or B): A. Comply with Section 140.8. Applicable SLTG forms shall also be submitted
02	A. Comply with Section 140.8. Applicable SLTG forms shall also be submitted.
03	B. Address sign(s) consume no more than 5 watts of power as determined according to Section 130.0(c).
04	By signing this document the installer certifies that the requirements above have been met.

This Table is applicable only if outdoor lighting is selected in Table A above

L. Single Family Outdoor Lighting	
01	150.0(k)9A: High efficacy outdoor lighting is installed
02	150.0(k)9A: Low efficacy outdoor lighting is installed, and meets all of the lighting control requirements as specified in Section 150.0(k)9A, as summarized below: i. Controlled by a manual ON and OFF switch; and ii. Controlled by a motion sensor; and iii. Controlled by Photocontrol, Astronomical time clock, or EMCS.
03	By signing this document the installer certifies that the requirements above have been met.

For information and data collection only. Not valid until registered with a HERS Provider

CERTIFICATE OF INSTALLATION	CF2R-LTG-01-E
Lighting – Single Family Dwellings	(Page 4 of 4)

Project Name:	Enforcement Agency:	Permit Number:
Dwelling Address:	City	Zip Code

DOCUMENTATION AUTHOR'S DECLARATION STATEMENT

1. I certify that this Certificate of Installation documentation is accurate and complete.

Documentation Author Name:	Documentation Author Signature:
Documentation Author Company Name:	Date Signed:
Address:	CEA/HERS Certification Identification (If applicable):
City/State/Zip:	Phone:

RESPONSIBLE PERSON'S DECLARATION STATEMENT

I certify the following under penalty of perjury, under the laws of the State of California:

1. The information provided on this Certificate of Installation is true and correct.
2. I am eligible under Division 3 of the Business and Professions Code in the applicable classification to accept responsibility for the system design, construction, or installation of features, materials, components, or manufactured devices for the scope of work identified on this Certificate of Installation, and attest to the declarations in this statement (responsible builder/installer), otherwise I am an authorized representative of the responsible builder/installer.
3. The constructed or installed features, materials, components or manufactured devices (the installation) identified on this Certificate of Installation conforms to all applicable codes and regulations, and the installation conforms to the requirements given on the plans and specifications approved by the enforcement agency.
4. I reviewed a copy of the Certificate of Compliance approved by the enforcement agency that identifies the specific requirements for the scope of construction or installation identified on this Certificate of Installation, and I have ensured that the requirements that apply to the construction or installation have been met.
5. I will ensure that a registered copy of this Certificate of Installation shall be posted, or made available with the building permit(s) issued for the building, and made available to the enforcement agency for all applicable inspections. I understand that a registered copy of this Certificate of Installation is required to be included with the documentation the builder provides to the building owner at occupancy.

Responsible Builder/Installer Name:	Responsible Builder/Installer Signature:	
Company Name: (Installing Subcontractor or General Contractor or Builder/Owner)	Position With Company (Title):	
Address:	CSLB License:	
City/State/Zip:	Phone	Date Signed:

For information and data collection only. Not valid until registered with a HERS provider

Instructions

There are two version of the residential lighting certificate of installation. This version, the CF2R-LTI-01-E, is primarily used for demonstrating compliance with the residential lighting standards for single family dwellings.

The LTI-01 shall also be used to demonstrate compliance with the residential lighting requirements for high-rise residential dwelling units; outdoor lighting that is attached to a high-rise residential or hotel/motel building, and is separately controlled from the inside of a dwelling unit or guest room; fire station dwelling accommodations; hotel and motel guest rooms; and, dormitory and senior housing dwelling accommodations. When using the CF2R-LTI-01-E to demonstrate compliance with the lighting in the dwelling units, compliance with lighting that is not in the dwelling units, such as lighting in common areas, shall be demonstrated using the nonresidential lighting compliance documentation.

The other version of the residential lighting certificate of installation, the CF2R-LTI-02-E, is used for demonstrating compliance with the residential lighting standards for low-rise multi-family dwellings. The primary difference between the LTI-02 and the LTI-01 is that the LTI-02 includes additional requirements for demonstrating compliance with residential outdoor lighting, and common areas associated with low-rise multi-family dwelling units.

Table A
This table is used to identify the scope of the work being covered by the responsible person signing this document. One person may be responsible for all of the measures in this table, or several people may each be responsible for only a portion of the measures. If several people are responsible, each person must separately fill out this certificate of installation for those measures for which they are responsible. In some situations, such as for alterations and additions, only some of the measures may be included in the total scope of work.

For rows 1 through 4 and rows 6 through 12 - insert 'Y' for each measure that is included in the scope of work, and insert 'N' for each measure that is not included in the scope of work.

Row 5, if the scope of the work includes kitchen lighting, identify which method(s) are used to comply, as follows:

- Pick from the list "only high efficacy luminaires (method a)" if appropriate. If this method is picked, do not pick either of the other two pick options; or,
- Pick from the list "at least 50% of installed watts from permanently installed high efficacy lighting (Method (b), and,
- If also appropriate, pick "an additional low efficacy lighting allotment (Method (c)"

Table B
This table is a list of mandatory residential lighting control requirements. Any lighting controls installed must meet those requirements which are applicable to the scope of the work being covered by the responsible person signing this document.

Table C
This table is a list of mandatory residential luminaire requirements. Any luminaires installed must meet those requirements which are applicable to the scope of the work being covered by the responsible person signing this document. Additionally, some luminaires, covered in Tables D and E, have additional mandatory requirements.

Table D
This Table is displayed only if residential recessed lighting is selected in Table A as being included in the scope of work. This table is a list of mandatory requirements for residential recessed luminaires, which are in addition to the applicable residential luminaire requirements listed in Table C. Any recessed luminaires installed must meet those requirements which are applicable to the scope of the work being covered by the responsible person signing this document.

Table E
This Table is displayed only if residential LED lighting is selected in Table A as being included in the scope of work. This table is a list of mandatory requirements for residential LED luminaires, which are in addition to the applicable residential luminaire requirements listed in Tables C and D. Any LED luminaires installed must meet those requirements which are applicable to the scope of the work being covered by the responsible person signing this document.

Table F
This Table is displayed only if residential kitchen lighting is selected in Table A as being included in the scope of work. This table includes a list of mandatory requirements for Kitchen lighting. Any Kitchen lighting installed must meet those requirements which are applicable to the scope of the work being covered by the responsible person signing this document.

For the residential kitchen lighting power requirements, this certificate of installation provides three different methods for demonstrating compliance, as follows:

For information and data collection only. Not valid until registered with a HERS provider.

- Method (a) is used when only high efficacy luminaires have been installed in the kitchen.
- Method (b) is used when at least 50% of the installed watts from permanently installed high efficacy
- Method (c) is used when additional low efficacy watts are allowed because all luminaires in the kitchen are controlled by a vacancy sensor or dimmers, in addition to separately controlling the high efficacy and low efficacy luminaires.

Method (a) does not require a calculation table because only high efficacy luminaires have been installed. Therefore, there are no requirements to demonstrate that at least 50% of the installed lighting power is from high efficacy luminaires.

Method (b) requires the Installed Wattage Calculation Table to be filled out, as follows:

- Use a separate row for each different type of lighting installed in the kitchen.
- Luminaire Type – is an identifying name for the type of luminaire
- High Efficacy Watts – use this cell only if the luminaire on this row is classified as high efficacy according to Tables 150-A or B. Luminaire wattage shall be determined in accordance with Section 130.0(c).
- Low Efficacy Watts – use this cell only if the luminaire on this row is classified as low efficacy according to Tables 150-A or B. Luminaire wattage shall be determined in accordance with Section 130.0(c).
- Quantity – is the number of the type of luminaire being described on this row.
- Total Watts, High Efficacy – if the luminaire described on this row is high efficacy, multiply the high efficacy watts times the quantity. Add the sum total of all of the rows of total high efficacy lighting together on the bottom of this column.
- Total Watts, High Efficacy – if the luminaire described on this row is low efficacy, multiply the low efficacy watts times the quantity. Add the sum total of all of the rows of total low efficacy lighting together on the bottom of this column.

The kitchen lighting complies with the lighting power requirements if the sum total watts of high efficacy lighting is ≥ the sum total watts of low efficacy lighting. However, the kitchen may qualify for additional watts of low efficacy lighting, if also demonstrated by filling out the Method (c) table.

Method (c) requires the Total Additional Low Efficacy Wattage Calculation Table to be filled out, as follows:

- Use only one row for this calculation.
- Watts from Method (b), High Efficacy – is the sum total high efficacy watts taken from Method (b), Installed Wattage Calculation Table.
- Watts from Method (b), Low Efficacy – is the sum total low efficacy watts taken from Method (b), Installed Wattage Calculation Table.
- Additional Watts Low Efficacy – Enter 50 if the house is ≤ 2,500 square feet, or enter 100 if the house is > 2,500 square feet
- Total Low Efficacy watts is the sum total of low efficacy watts taken from Method (b), plus the additional watts of low efficacy lighting documented in this table.

The residential kitchen lighting complies with the lighting power requirements if the sum total of high efficacy watts is ≥ the sum total of ALL low efficacy watts, minus the additional watts of low efficacy lighting documented with Method (c).

By signing this document the installer certifies that the requirements for residential kitchen lighting wattage allowances have been met.

Table G
This Table is displayed only if internal cabinet lighting is selected in Table A as being included in the scope of work. This table is a list of mandatory requirements for internal cabinet lighting. Any permanently installed lighting internal to cabinets must meet those requirements which are applicable to the scope of the work being covered by the responsible person signing this document.

Table H
This Table is displayed only if residential bathroom lighting is selected in Table A as being included in the scope of work. This table is a list of mandatory requirements for bathroom lighting. Lighting for each bathroom applicable to the scope of the work being covered by the responsible person signing this document must separately meet these requirements.

Table I
This Table is displayed only if residential garage, laundry room and utility room lighting is selected in Table A as being included in the scope of work. This table is a list of mandatory requirements for garage, laundry room and utility room lighting. Lighting for each garage, laundry room and utility room applicable to the scope of the work being covered by the responsible person signing this document must separately meet these requirements.

Table J
This Table is displayed only if lighting in rooms other than residential garage, laundry room and utility room is selected in Table A as being included in the scope of work. This table is a list of mandatory requirements for lighting in residential rooms other than garage, laundry room and utility room. These mandatory requirements apply to any room not defined in Section 100.1 of the Standards as a residential garage, residential laundry room or residential utility room. Lighting for each room that is other than a garage, laundry room or utility room utility room applicable to the scope of the work being covered by the responsible person signing this document must separately meet these requirements.

For information and data collection only. Not valid until registered with a HERS provider.

Table K
This Table is displayed only if lighting for residential internally illuminated address signs is selected in Table A as being included in the scope of work. This table is a list of mandatory requirements for internally illuminated address signs. Lighting for each internally illuminated address sign applicable to the scope of the work being covered by the responsible person signing this document must separately meet these requirements.

Table L
This Table is displayed only if residential outdoor lighting is selected in Table A as being included in the scope of work. This table is a list of mandatory requirements for single family outdoor lighting. Any installed outdoor lighting must meet those requirements which are applicable to the scope of the work being covered by the responsible person signing this document.

For information and data collection only. Not valid until registered with a HERS provider

LIGHTING – MULTI FAMILY DWELLINGS

CERTIFICATE OF INSTALLATION		CF2R-LTG-02-E
Lighting – Multi Family Dwellings		(Page 1 of 5)
Project Name:	Enforcement Agency:	Permit Number:
Dwelling Address:	City	Zip Code

A. Does the scope of this project include (select Yes or No to the following options):			Y or N
1	Controls for any interior or outdoor lighting		
2	Luminaires in any interior room or outdoor		
3	luminaires recessed into ceilings		
4	Light Emitting Diode (LED) luminaires		
5	Kitchen lighting scope.	<< user pick from list: • Only high efficacy luminaires (method (a)); or • At least 50% of installed watts from permanently installed high efficacy lighting (method (b)) • Qualifies for an additional low efficacy lighting allotment (method (c)).	
6	Lighting internal to cabinets		
7	Bathroom lighting		
8	Lighting in garages, laundry rooms		
9	Lighting in rooms other than a kitchen, bathroom, garage, laundry room, or utility room		
10	Outdoor lighting that is for private patios, entrances, balconies, and porches		
11	Outdoor lighting for multi-family buildings with four or more dwelling units that is for other than private patios, entrances, balconies, porches or residential parking lots or residential carports		
12	Internally illuminated address signs		
13	Outdoor lighting for residential parking lots or carports with a total of less than eight vehicles per site		
14	Outdoor lighting for residential parking lots or carports with a total of eight or more vehicles per site		
15	Interior common areas equal to 20 % or less of the floor area in the building		
16	Interior common areas equal to more than 20% of the floor area in the building		

B. Lighting Controls	
1	150.0(k)2A: High efficacy luminaires are switched separately from low efficacy luminaires.
2	150.0(k)2B: Exhaust fans are switched separately from lighting systems, or can be switched OFF in accordance with EXCEPTION
3	150.0(k)2C: Luminaires are switched with readily accessible controls that permit luminaires to be manually switched ON and OFF
4	150.0(k)2D: Lighting controls and equipment are installed in accordance with manufacturer's instructions
5	150.0(k)2E: No controls are installed that bypass a dimmer or vacancy sensor function where that dimmer or vacancy sensor has been installed to comply with Section 150.0(k)
6	150.0(k)2F: Lighting controls comply with the applicable requirements in Section 110.9; Certified to the Energy Commission as applicable
7	150.0(k)2G: EMCS used to comply with dimmer requirements provides the functionality of a dimmer in accordance with Section 110.9, meets the installation certificate requirements in Section 130.4, the EMCS requirements in Section 130.5, and complies with all other applicable requirements in Section 150.0(k)2.
8	150.0(k)2H: EMCS used to comply with vacancy sensor requirements in Section 150.0(k) provides the functionality of a vacancy sensor in accordance with Section 110.9, meets the installation certificate requirements in Section 130.4, the EMCS requirements in Section 130.5, and complies with all other applicable requirements in Section 150.0(k)2.
9	150.0(k)2I: A multi-scene programmable controller used to comply with dimmer requirements provides the functionality of a dimmer in accordance with Section 110.9, and complies with all other applicable requirements in Section 150.0(k)2.
10	By signing this document the installer certifies that the requirements above have been met.

C. Luminaires (Lighting Fixtures)	
1	150.0(k)1(A-C): For compliance with Section 150.0(k), all installed luminaires have been classified as high efficacy or low efficacy in accordance with the applicable requirements in Section 130.0(c), and in accordance with TABLE 150.0-A or TABLE 150.0-B
2	150.0(k)1D: Ballasts for fluorescent lamps rated 13 watts or greater are electronic.
3	150.0(k)1E: Night lights are rated to consume no more than five watts of power
4	150.0(k)1F: Lighting integral to exhaust fans meets all applicable requirements of Section 150.0(k)
5	By signing this document the installer certifies that the requirements above have been met.

This Table is applicable only if recessed lighting is selected in Table A above

D. Recessed Luminaires	
1	150.0(k)8A: Listed for zero clearance insulation contact (IC)
2	150.0(k)8B: Has label certifying air tight
3	150.0(k)8C: Sealed with a gasket or caulk between the luminaire housing and ceiling, and all air leak paths between conditioned and unconditioned spaces are sealed with a gasket or caulk; and
4	150.0(k)8D: Ballasts for compact fluorescent luminaires certified to the Commission in accordance with Section 110.9; and

For information and data collection Only. Not valid until registered with a HERS Provider

5	150.0(k)8E: Allows ballast maintenance and replacement to be readily accessible to building occupants from below the ceiling without requiring the cutting of holes in the ceiling.
6	By signing this document the installer certifies that the requirements above have been met.

This Table is applicable only if LED lighting is selected in Table A above

E. LED Luminaires	
1	TABLE 150.0-A: The LED luminaires are classified as low efficacy because they have NOT been Certified to the Energy Commission, or they do not comply with all of the following requirements, as applicable: Sections 110.9(e), 130.0(c)9, 150.0(k)1A, TABLE 150.0-A, and Reference Joint Appendix JA8.
2	150.0(k)1A: The LED luminaires are classified as high efficacy because they ARE Certified to the Energy Commission by the manufacturer in accordance with all of the following requirements, as applicable: Sections 110.9(e), 130.0(c)9, 150.0(k)1A, TABLE 150.0-A, and Reference Joint Appendix JA8.
3	By signing this document the installer certifies that the requirements above have been met.

This Table is applicable only if Kitchen lighting is selected in Table A above

F. Kitchen Lighting	
1	150.0(k)1C: The wattage of permanently installed luminaires determined as specified in Section 130.0(c).
2	150.0(k)1C: In the kitchen, wattage calculated as 180 watts of low efficacy lighting per blank electrical boxes finished with a blank cover.
3	Method <(a), (b), or (c) as selected above> from Section 150(k)3A: Compliance demonstrated using Method (a) because only high efficacy luminaires have been installed in the kitchen. Compliance demonstrated using Method (b). At least 50% of the installed watts from permanently installed high efficacy. Total A ≥ Total B in Installed Wattage Calculation Table (below) Compliance demonstrated with additional low efficacy wattage allowance of EXCEPTION to 150(k)3
4	<If method (c) is selected, this additional field will be displayed> EXCEPTION to 150.0(k)3: Additional low efficacy watts may be allowed when all luminaires in the kitchen are controlled by a vacancy sensor or dimmers, and 1. See 150.0(k)2A where high efficacy and low efficacy luminaires must be separately controlled. 2. See 150.0(k)2G where EMCS may be used as a dimmer; Section 150.0(k)2H where EMCS may be used as a vacancy sensor; or, 150.0(k)2I where multi-scene programmable controller may be used as a dimmer. NOTES: Compliance demonstrated using Method (c). Kitchen lighting qualifies for additional low efficacy lighting and as demonstrated in Installed Wattage Calculation Table in Method (b) (above) in addition to Additional Low Efficacy Wattage Calculation Table (below).
5	By signing this document the installer certifies that the requirements for kitchen lighting wattage allowances have been met.

This Table is applicable only if Kitchen Lighting using Method (b) or (c) is selected in Table F above

						Per single dwelling unit		
	Luminaires (Fixture)					Total Watts		
	High	Low				High		Low
Luminaire Type	Efficacy Watts	Efficacy Watts		Quantity		Efficacy		Efficacy
			x		=	0		0
			x		=	0		0
			x		=	0		0
			x		=	0		0
			x		=	0		0
			x		=	0		0
	Complies with method (b) if Total A ≥ Total B					0		0
						A	≥	B

This Table is applicable only if Kitchen Lighting using Method (c) is selected in Table F above

			(see footnote)		
Watts From Method (b)			Additional		Per single dwelling unit
High	Low		Watts		Total Low Efficacy
Efficacy	Efficacy		Low Efficacy		Watts Allowd
0	0		0		0
1. Insert 50 if single dwelling is ≤ 2,500 square feet; Insert 100 if single dwelling is > 2,500 square feet.					

For information and data collection only. Not valid until registered with a HERS provider

CERTIFICATE OF INSTALLATION		CF2R-LTG-02-E
Lighting – Multi Family Dwellings		(Page 3 of 5)
Project Name:	Enforcement Agency:	Permit Number:
Dwelling Address:	City	Zip Code

This Table is applicable only if Internal Cabinet lighting is selected in Table A above

G. Lighting Internal to Cabinets	
1	150.0(k)4: Permanently installed lighting internal to cabinets uses ≤ 20 watts of power per linear foot of illuminated cabinet.
2	By signing this document the installer certifies that the requirements above have been met.

This Table is applicable only if bathroom lighting is selected in Table A above

H. Lighting in Bathrooms	
1	150.0(k)5A: A minimum of one high efficacy luminaire is installed in each bathroom; and
2	150.0(k)5B: All other lighting installed in each bathroom is high efficacy or controlled by vacancy sensors.
3	By signing this document the installer certifies that the requirements above have been met.

This Table is applicable only if garage, laundry room and utility room lighting is selected in Table A above

I. Lighting in Garages, Laundry Rooms, and Utility Rooms	
1	150.0(k)6: All installed luminaires are high efficacy AND controlled by vacancy sensors
2	By signing this document the installer certifies that the requirements above have been met.

This Table is applicable only if lighting in rooms other than garage, laundry room and utility room lighting is selected in Table A above

J. Lighting other than in Kitchens, Bathrooms, Garages, Laundry Rooms, and Utility Rooms	
1	150.0(k)7: Installed lighting is high efficacy
2	150.0(k)7: Installed lighting is low efficacy and controlled by dimmers or vacancy sensors
3	150.0(k)7: Exempt lighting is in closets that are < 70 sq ft.
4	150.0(k)7: Exempt lighting is in detached storage buildings that are < 1,000 sq ft.
5	By signing this document the installer certifies that the requirements above have been met.

This Table is applicable only if outdoor lighting for private patios, entrances, balconies, and porches is selected in Table A above

K. Multi-Family Private Patios, Entrances, Balconies and Porches	
1	150.0(k)9B: High efficacy outdoor lighting is installed
2	150.0(k)9Bi: Low efficacy outdoor lighting is installed, and meets all of the lighting control requirements, as specified in 150.0(k)9A, as summarized below: i. Controlled by a manual ON and OFF switch; and ii. Controlled by a motion sensor; and iii. Controlled by Photocontrol, Astronomical time clock, or EMCS.
3	150.0(k)9Bii: Outdoor lighting for private patios, entrances, balconies, and porches complies with the applicable requirements in Sections 110.9, 130.0, 130.2, 130.4, 140.7, and 141.0. Applicable LTO forms shall also be submitted.
4	By signing this document the installer certifies that the requirements above have been met.

This Table is applicable only if outdoor lighting for other than private patios, entrances, balconies, porches or parking lots or carports is selected in Table A above

L. Multi-Family Other Outdoor Lighting	
1	150.0(k)9D: Outdoor lighting complies with the applicable requirements in Sections 110.9, 130.0, 130.2, 130.4, 140.7, and 141.0. Applicable LTO forms shall be submitted.
2	By signing this document the installer certifies that the requirements above have been met.

This Table is applicable only if parking lots and carports for less than eight vehicles is selected in Table A above

M. Multi-Family Parking Lots and Carports for Less than Eight Vehicles	
1	150.0(k)9B: High efficacy outdoor lighting is installed
2	150.0(k)9Bi: Low efficacy outdoor lighting is installed, and meets all of the lighting control requirements, as specified in 150.0(k)9A, as summarized below: i. Controlled by a manual ON and OFF switch; and ii. Controlled by a motion sensor; and iii. Controlled by Photocontrol, Astronomical time clock, or EMCS.
3	By signing this document the installer certifies that the requirements above have been met.

For information and data collection only. Not valid until registered with a HERS provider

CERTIFICATE OF INSTALLATION		CF2R-LTG-02-E
Lighting – Multi Family Dwellings		(Page 4 of 5)
Project Name:	Enforcement Agency:	Permit Number:
Dwelling Address:	City	Zip Code

This Table is applicable only if parking lots and carports for eight or more vehicles is selected in Table A above

N. Multi-Family Parking Lots and Carports for Eight or More Vehicles	
1	150.0(k)9D: Outdoor lighting complies with the applicable requirements in Sections 110.9, 130.0, 130.2, 130.4, 140.7, and 141.0. Applicable LTO forms shall also be submitted.
2	By signing this document the installer certifies that the requirements above have been met.

This Table is applicable only if internally illuminated address signs is selected in Table A above

O. Address Signs	
1	150.0(k)10A: Internally illuminated address signs. Internally illuminated address signs shall (Select option A or B): A. Comply with Section 140.8. Applicable SLTG forms shall also be submitted
2	A. Comply with Section 140.8. Applicable SLTG forms shall also be submitted.
3	B. Address sign(s) consume no more than 5 watts of power as determined according to Section 130.0(c).
4	By signing this document the installer certifies that the requirements above have been met.

This Table is applicable only if garages with eight or more vehicles is selected in Table A above

P. Residential Garages for Eight or More Vehicles	
1	150.0(k)11: Lighting complies with the applicable requirements for nonresidential garages in Sections 110.9, 130.0, 130.1, 130.4, 140.6, and 141.0. Applicable LTG forms shall also be submitted
2	By signing this document the installer certifies that the requirements above have been met.

This Table is applicable only if common area <= 20% is selected in Table A above

Q. Interior Common Areas (<= 20%) of Low-rise Multi-Family (Select one of the 2 options that was used to comply with this requirement)	
1	150.0(k)12A: Installed lighting is high efficacy; or
2	150.0(k)12A: Installed lighting is low efficacy and controlled by occupancy sensors
3	By signing this document the installer certifies that the requirements above have been met.

This Table is applicable only if common area >20% is selected in Table A above

R. Interior Common Areas (> 20%) of Low-rise Multi-Family (Select one of the 2 options that was used to comply with this requirement)	
1	150.0(k)12Bi: Lighting complies with the applicable requirements in Sections 110.9, 130.0, 130.1, 140.6, and 141.0. Applicable LTG forms shall also be submitted
2	150.0(k)12Bii: Lighting installed in corridors and stairwells is controlled by occupant sensors in accordance with requirements in Section 150.0(k)A.
3	By signing this document the installer certifies that the requirements above have been met.

For information and data collection only. Not valid until registered with a HERS provider

CERTIFICATE OF INSTALLATION		CF2R-LTG-02-E
Lighting – Multi Family Dwellings		(Page 5 of 5)
Project Name:	Enforcement Agency:	Permit Number:
Dwelling Address:	City	Zip Code

DOCUMENTATION AUTHOR'S DECLARATION STATEMENT	
1. I certify that this Certificate of Installation documentation is accurate and complete.	
Documentation Author Name:	Documentation Author Signature:
Documentation Author Company Name:	Date Signed:
Address:	CEA/HERS Certification Identification (If applicable):
City/State/Zip:	Phone:

RESPONSIBLE PERSON'S DECLARATION STATEMENT

I certify the following under penalty of perjury, under the laws of the State of California:

1. The information provided on this Certificate of Installation is true and correct.
2. I am eligible under Division 3 of the Business and Professions Code in the applicable classification to accept responsibility for the system design, construction, or installation of features, materials, components, or manufactured devices for the scope of work identified on this Certificate of Installation, and attest to the declarations in this statement (responsible builder/installer), otherwise I am an authorized representative of the responsible builder/installer.
3. The constructed or installed features, materials, components or manufactured devices (the installation) identified on this Certificate of Installation conforms to all applicable codes and regulations, and the installation conforms to the requirements given on the plans and specifications approved by the enforcement agency.
4. I reviewed a copy of the Certificate of Compliance approved by the enforcement agency that identifies the specific requirements for the scope of construction or installation identified on this Certificate of Installation, and I have ensured that the requirements that apply to the construction or installation have been met.
5. I will ensure that a registered copy of this Certificate of Installation shall be posted, or made available with the building permit(s) issued for the building, and made available to the enforcement agency for all applicable inspections. I understand that a registered copy of this Certificate of Installation is required to be included with the documentation the builder provides to the building owner at occupancy.

Responsible Builder/Installer Name:	Responsible Builder/Installer Signature:	
Company Name: (Installing Subcontractor or General Contractor or Builder/Owner)	Position With Company (Title):	
Address:	CSLB License:	
City/State/Zip:	Phone	Date Signed:

For information and data collection only. Not valid until registered with a HERS provider

Instructions

There are two version of the residential lighting certificate of installation. This version, the CF2R-LTI-02-E, is used for demonstrating compliance with the residential lighting standards for low-rise multi-family dwellings.

The other version of the lighting certificate of installation, the CF2R-LTI-01-E, is used for demonstrating compliance with the residential lighting standards for single family dwellings. The LTI-01 shall also be used to demonstrate compliance with the residential lighting requirements for high-rise residential dwelling units; outdoor lighting that is attached to a high-rise residential or hotel/motel building, and is separately controlled from the inside of a dwelling unit or guest room; fire station dwelling accommodations; hotel and motel guest rooms; and, dormitory and senior housing dwelling accommodations.

The primary difference between the LTI-02 and the LTI-01 is that the LTI-02 includes additional requirements for demonstrating compliance with residential outdoor lighting, and common areas associated with low-rise multi-family dwelling units.

Each dwelling unit shall separately comply with all of the applicable residential lighting Standards. Note that rooms and areas that are not within a dwelling unit shall comply with the nonresidential lighting Standards, and the nonresidential lighting compliance documents must also be submitted.

Table A
This table is used to identify the scope of the work being covered by the responsible person signing this document. One person may be responsible for all of the measures in this table, or several people may each be responsible for only a portion of the measures. If several people are responsible, each person must separately fill out this certificate of installation for those measures for which they are responsible. In some situations, such as for alterations and additions, only some of the measures may be included in the total scope of work.

For rows 1 through 4 and rows 6 through 16 - insert 'Y' for each measure that is included in the scope of work, and insert 'N' for each measure that is not included in the scope of work.

Row 5, if the scope of the work includes dwelling unit kitchen lighting, identify which method(s) are used to comply, as follows:

- Pick from the list "only high efficacy luminaires (method a)" if appropriate. If this method is picked, do not pick either of the other two pick options; or,
- Pick from the list "at least 50% of installed watts from permanently installed high efficacy lighting (Method (b), and,
- If also appropriate, pick "qualifies for an additional low efficacy lighting allotment (Method (c)"

Table B
This table is a list of mandatory lighting control requirements. Any dwelling unit lighting controls installed must meet those requirements which are applicable to the scope of the work being covered by the responsible person signing this document.

Table C
This table is a list of mandatory luminaire requirements. Any dwelling unit luminaires installed must meet those requirements which are applicable to the scope of the work being covered by the responsible person signing this document. Additionally, some luminaires, covered in Tables D and E, have additional mandatory requirements.

Table D
This Table is displayed only if dwelling unit recessed lighting is selected in Table A as being included in the scope of work. This table is a list of mandatory requirements for recessed luminaires, which are in addition to the applicable luminaire requirements listed in Table C. Any recessed luminaires installed must meet those requirements which are applicable to the scope of the work being covered by the responsible person signing this document.

Table E
This Table is displayed only if dwelling unit LED lighting is selected in Table A as being included in the scope of work. This table is a list of mandatory requirements for LED luminaires, which are in addition to the applicable luminaire requirements listed in Tables C and D. Any LED luminaires installed must meet those requirements which are applicable to the scope of the work being covered by the responsible person signing this document.

Table F
This Table is displayed only if kitchen lighting is selected in Table A as being included in the scope of work. This table includes a list of mandatory requirements for Kitchen lighting. Lighting for each dwelling unit kitchen applicable to the scope of the work being covered by the responsible person signing this document must separately document and separately meet these requirements.

For information and data collection only. Not valid until registered with a HERS provider

For the kitchen lighting power requirements, this certificate of installation provides three different methods for demonstrating compliance, as follows:

- Method (a) is used when only high efficacy luminaires have been installed in the kitchen.
- Method (b) is used when at least 50% of the installed watts from permanently installed high efficacy
- Method (c) is used when additional low efficacy watts are allowed because all luminaires in the kitchen are controlled by a vacancy sensor or dimmers, in addition to separately controlling the high efficacy and low efficacy luminaires.

Method (a) does not require a calculation table because only high efficacy luminaires have been installed. Therefore, there are no requirements to demonstrate that at least 50% of the installed lighting power is from high efficacy luminaires.

Method (b) requires the Installed Wattage Calculation Table to be filled out, as follows:

- Use a separate row for each different type of lighting installed in the kitchen.
- Luminaire Type – is an identifying name for the type of luminaire
- High Efficacy Watts – use this cell only if the luminaire on this row is classified as high efficacy according to Tables 150-A or B. Luminaire wattage shall be determined in accordance with Section 130.0(c).
- Low Efficacy Watts – use this cell only if the luminaire on this row is classified as low efficacy according to Tables 150-A or B. Luminaire wattage shall be determined in accordance with Section 130.0(c).
- Quantity – is the number of the type of luminaire being described on this row.
- Total Watts, High Efficacy – if the luminaire described on this row is high efficacy, multiply the high efficacy watts times the quantity. Add the sum total of all of the rows of total high efficacy lighting together on the bottom of this column.
- Total Watts, High Efficacy – if the luminaire described on this row is low efficacy, multiply the low efficacy watts times the quantity. Add the sum total of all of the rows of total low efficacy lighting together on the bottom of this column.

The kitchen lighting complies with the lighting power requirements if the sum total watts of high efficacy lighting is ≥ the sum total watts of low efficacy lighting. However, the kitchen may qualify for additional watts of low efficacy lighting, if also demonstrated by filling out the Method (c) table.

Method (c) requires the Total Additional Low Efficacy Wattage Calculation Table to be filled out, as follows:

- Use only one row for this calculation.
- Watts from Method (b), High Efficacy – is the sum total high efficacy watts taken from Method (b), Installed Wattage Calculation Table.
- Watts from Method (b), Low Efficacy – is the sum total low efficacy watts taken from Method (b), Installed Wattage Calculation Table.
- Additional Watts Low Efficacy – Enter 50 if the individual dwelling unit ≤ 2,500 square feet, or enter 100 if the individual dwelling unit is > 2,500 square feet
- Total Low Efficacy watts is the sum total of low efficacy watts taken from Method (b), plus the additional watts of low efficacy lighting documented in this table.

A single dwelling unit kitchen lighting complies with the lighting power requirements if the sum total of high efficacy watts is ≥ the sum total of ALL low efficacy watts, minus the additional watts of low efficacy lighting documented with Method (c).

By signing this document the installer certifies that the requirements for kitchen lighting wattage allowances have been met separately for each dwelling unit kitchen.

Table G
This Table is displayed only if internal cabinet lighting is selected in Table A as being included in the scope of work. This table is a list of mandatory requirements for dwelling unit internal cabinet lighting. Lighting internal to cabinets for each dwelling unit applicable to the scope of the work being covered by the responsible person signing this document must separately document and separately meet these requirements.

Table H
This Table is displayed only if bathroom lighting is selected in Table A as being included in the scope of work. This table is a list of mandatory requirements for bathroom lighting. Lighting for each bathroom in each dwelling unit applicable to the scope of the work being covered by the responsible person signing this document must separately meet these requirements.

Table I
This Table is displayed only if garage, laundry room and utility room lighting is selected in Table A as being included in the scope of work. This table is a list of mandatory requirements for garage, laundry room and utility room lighting. Lighting for each dwelling unit garage, laundry room and utility room applicable to the scope of the work being covered by the responsible person signing this document must separately meet these requirements.

For information and data collection only. Not valid until registered with a HERS provider

Table J
This Table is displayed only if lighting in rooms other than garage, laundry room and utility room is selected in Table A as being included in the scope of work. This table is a list of mandatory requirements for lighting in dwelling unit rooms other than garage, laundry room and utility room. These mandatory requirements apply to any dwelling unit room not defined in Section 100.1 of the Standards as a residential garage, residential laundry room or residential utility room. Lighting for each dwelling unit room that is other than a garage, laundry room or utility room utility room applicable to the scope of the work being covered by the responsible person signing this document must separately meet these requirements.

Table K
This Table is displayed only if outdoor lighting for private patios, entrances, balconies, and porches is selected in Table A as being included in the scope of work. This table is a list of mandatory requirements for outdoor lighting for private patios, entrances, balconies, and porches. Outdoor lighting for each dwelling applicable to the scope of the work being covered by the responsible person signing this document must separately meet these requirements. If the nonresidential lighting standards are used to comply with the outdoor lighting for private patios, entrances, balconies, and porches, then the nonresidential outdoor lighting compliance documents must also be submitted.

Table L
This Table is displayed only if outdoor lighting for other than private patios, entrances, balconies, and porches is selected in Table A as being included in the scope of work. This table is a list of sections in the Standards required for compliance with outdoor lighting for low rise multi-family outdoor lighting which is other than private patios, entrances, balconies, and porches. Outdoor lighting applicable to the scope of the work being covered by the responsible person signing this document must separately meet these requirements. The nonresidential outdoor lighting compliance documents must also be submitted.

Table M
This Table is displayed only if lighting for parking lots and carports for less than eight vehicles is selected in Table A as being included in the scope of work. This table is a list of mandatory requirements for parking lots and carports for less than eight vehicles. Outdoor lighting applicable to the scope of the work being covered by the responsible person signing this document must meet these requirements.

Table N
This Table is displayed only if lighting for parking lots and carports for eight of more vehicles is selected in Table A as being included in the scope of work. This Table applies when the site has a combined sum total of eight of more vehicles for all parking lots and carports. This table is a list of sections in the Standards required for compliance with outdoor lighting for low rise multi-family outdoor lighting for parking lots and carports for eight of more vehicles lighting. Outdoor lighting applicable to the scope of the work being covered by the responsible person signing this document must meet these requirements. The nonresidential outdoor lighting compliance documents must also be submitted.

Table O
This Table is displayed only if internally illuminated address signs is selected in Table A as being included in the scope of work. This table is a list of mandatory requirements for internally illuminated address signs. Lighting for each internally illuminated address sign applicable to the scope of the work being covered by the responsible person signing this document must separately meet these requirements.

Table P
This Table is displayed only if lighting for garages with eight or more vehicles is selected in Table A as being included in the scope of work. This table is a list of sections in the Standards required for compliance with lighting for garages with eight or more vehicles. Lighting applicable to the scope of the work being covered by the responsible person signing this document must meet these requirements. The nonresidential indoor lighting compliance documents must also be submitted.

Table Q
This Table is displayed only if lighting for common areas ≤ 20% is selected in Table A as being included in the scope of work. This table is a list of mandatory requirements when common areas ≤ 20% of the area of a single building. Lighting for the common areas of each building must be separately documented. Lighting applicable to the scope of the work being covered by the responsible person signing this document must meet these requirements.

Table R
This Table is displayed only if lighting for common areas > 20% is selected in Table A as being included in the scope of work. This Table applies when a single building has a combined total of > 20% common area (areas which do not qualify as residential individual dwelling unit areas). Each building shall be separately documented. This table is a list of sections in the Standards required for compliance with indoor lighting of common areas of low rise multi-family. Lighting applicable to the scope of the work being covered by the responsible person signing this document must meet these requirements. The nonresidential indoor lighting compliance documents must also be submitted.

For information and data collection only. Not valid until registered with a HERS provider

SPACE CONDITIONING SYSTEMS DUCTS AND FANS

CERTIFICATE OF INSTALLATION		CF2R-MCH-01-H
Space Conditioning Systems Ducts and Fans		(Page 1 of 4)
Project Name:	Enforcement Agency:	Permit Number:
Dwelling Address:	City	Zip Code

A. General Information					
01	Dwelling Unit Name		02	Number of Space Conditioning Systems in this dwelling unit	
03	Dwelling Unit Conditioned Floor Area (ft2)		04	Number of Space Conditioning Zones in this dwelling unit	
05	Certificate of Compliance Type		06	method used to calculate HVAC loads	
07	Calculated Cooling Load (Btuh)		08	Calculated Heating Load (Btuh)	
09	Determination of Mech01 type (this row not visible to user)				

B. Space Conditioning (SC) System Requirements from CF1R

01	02	03	04	05	06	07	08	09	10
SC System Identification or Name	Heating System Type	Heating Efficiency	Cooling System Type	Cooling Efficiency SEER	Cooling Efficiency EER	Duct System Name	Air-Handling Unit Fan Type	Cooling Zoning Type	Minimum Cooling Zone Airflow Rate (cfm/ton)

Notes:

For information and data collection only. Not valid until registered with a HERS provider.

CERTIFICATE OF INSTALLATION		CF2R-MCH-01-H
Space Conditioning Systems Ducts and Fans		(Page 2 of 4)
Project Name:	Enforcement Agency:	Permit Number:
Dwelling Address:	City	Zip Code

C. Installed Space Conditioning (SC) System Information

01	02	03	04	05	06	07	08
SC System Identification or Name	**SC System Location or Area Served**	**SC System Installation Type**	**Cooling System Type**	**SC System Distribution Type**	**Cooling System Zoning Type**	**Conditioned Floor Area served by the system (ft2)**	

Notes:

D. Installed Cooling Equipment information: (note: this table is not applicable if cooling system type in C04 is "no cooling")

01	02	03	04	05	06	07	08
System Identification or Name	**Cooling Efficiency SEER**	**Cooling Efficiency EER**	**Condenser or Package Unit Manufacturer**	**Condenser or Package Unit Model Number**	**Condenser or Package Unit Serial Number**	**Condenser Rated Cooling Capacity (BTUH)**	**Condenser Nominal Capacity (ton)**

Notes:

E. Installed Heating Equipment information

01	02	03	04	05	06	07
System Identification or Name	**Heating Efficiency AFUE**	**Heating Efficiency HSFP**	**Heating Unit Manufacturer**	**Heating Unit Model Number**	**Heating Unit serial number**	**Rated Heating Capacity (BTUH)**

Notes:

For information and data collection only. Not valid until registered with a HERS provider

CERTIFICATE OF INSTALLATION		CF2R-MCH-01-H
Space Conditioning Systems Ducts and Fans		(Page 3 of 4)
Project Name:	Enforcement Agency:	Permit Number:
Dwelling Address:	City	Zip Code

F. Installed Duct System information

01	02	03	04	05	06
SC System Identification or Name	**SC System Location or Area Served**	**is R-Value < Min installed for Ducts In Conditioned Space?**	**Method of compliance with duct and filter grille sizing - 150.0(m)13**	**Number of Air Filter Devices**	

Notes:

G. Installed Duct System information

01	02	04	05	07	08
SC System Identification or Name	**SC System Location or Area Served**	**Return Duct R-Value**	**Return Duct Location**	**Supply Duct R-Value**	**Supply Duct Location**
<<auto filled from C01>>	<<auto filled from C02>>				

Notes:

H. HERS Verification Requirements

1	2	3	4	5	6	7	8	9	10	11
System Identification or Name	**MCH20 Duct Leakage Test**	**MCH21 Ducts Located In Cond Space Performance Credit**	**MCH21 Ducts Located In Cond Space R-Value**	**MCH22 AHU Fan Efficacy (W/cfm)**	**MCH23 AHU Airflow Rate (cfm/ton)**	**MCH25 Refrigerant Charge**	**MCH26 EER or SEER**	**MCH28 Return Duct Design - Table 150.0-C or D**	**MCH29 Supply Duct Surface Area , R-Value Buried Ducts**	**MCH30 Ventilation Cooling Credit**

Notes:

For information and data collection only. Not valid until registered with a HERS Provider

CERTIFICATE OF INSTALLATION		CF2R-MCH-01-H
Space Conditioning Systems Ducts and Fans		(Page 4 of 4)
Project Name:	Enforcement Agency:	Permit Number:
Dwelling Address:	City	Zip Code

DOCUMENTATION AUTHOR'S DECLARATION STATEMENT

1. I certify that this Certificate of Installation documentation is accurate and complete.

Documentation Author Name:	Documentation Author Signature:
Documentation Author Company Name:	Date Signed:
Address:	CEA/HERS Certification Identification (If applicable):
City/State/Zip:	Phone:

RESPONSIBLE PERSON'S DECLARATION STATEMENT

I certify the following under penalty of perjury, under the laws of the State of California:

1. The information provided on this Certificate of Installation is true and correct.
2. I am eligible under Division 3 of the Business and Professions Code in the applicable classification to accept responsibility for the system design, construction, or installation of features, materials, components, or manufactured devices for the scope of work identified on this Certificate of Installation, and attest to the declarations in this statement (responsible builder/installer), otherwise I am an authorized representative of the responsible builder/installer.
3. The constructed or installed features, materials, components or manufactured devices (the installation) identified on this Certificate of Installation conforms to all applicable codes and regulations, and the installation conforms to the requirements given on the plans and specifications approved by the enforcement agency.
4. I reviewed a copy of the Certificate of Compliance approved by the enforcement agency that identifies the specific requirements for the scope of construction or installation identified on this Certificate of Installation, and I have ensured that the requirements that apply to the construction or installation have been met.
5. I will ensure that a registered copy of this Certificate of Installation shall be posted, or made available with the building permit(s) issued for the building, and made available to the enforcement agency for all applicable inspections. I understand that a registered copy of this Certificate of Installation is required to be included with the documentation the builder provides to the building owner at occupancy.

Responsible Builder/Installer Name:	Responsible Builder/Installer Signature:	
Company Name: (Installing Subcontractor or General Contractor or Builder/Owner)	Position With Company (Title):	
Address:	CSLB License:	
City/State/Zip:	Phone	Date Signed:

For information and data collection only. Not valid until registered with a HERS provider

WHOLE HOUSE FAN

CERTIFICATE OF INSTALLATION		CF2R-MCH-02-E
Whole House Fan		(Page 1 of 2)
Project Name:	Enforcement Agency:	Permit Number:
Dwelling Address:	City	Zip Code

Whole House Fan requirements are given in Standards Section 150.1(c)12.

A. Whole House Fan (WHF) Equipment Information		
01	WHF Manufacturer Name	
02	WHF Manufacturer Model #	
03	WHF Rated CFM	
04	Quantity of identical WHF installed of type described in A1, A2, A3	
05	Total Whole House Fan CFM	
06	Required Attic Ventilation Area (in2)	
07	Installed Attic Ventilation Area (in2)	

B. Whole House Fan compliance criteria calculations		
01	Dwelling Conditioned Floor Area from CF-1R	
02	Minimum Required Fan (CFM)	

C. Compliance Statement

D. Additional Requirements	
01	The installed fan shall be listed on the CEC appliance directory as an approved model.
02	The homeowner shall be provided with user instructions documentation that describe the proper use of the whole house fan necessary to obtain the full energy savings benefit.
The responsible person's signature on this document indicates that the installation meets these additional requirements specified in Table D.	

For information and data collection only. Not valid until registered with a HERS provider

CERTIFICATE OF INSTALLATION		CF2R-MCH-02-E
Whole House Fan		(Page 2 of 2)
Project Name:	Enforcement Agency:	Permit Number:
Dwelling Address:	City	Zip Code

DOCUMENTATION AUTHOR'S DECLARATION STATEMENT

1. I certify that this Certificate of Installation documentation is accurate and complete.

Documentation Author Name:	Documentation Author Signature:
Documentation Author Company Name:	Date Signed:
Address:	CEA/HERS Certification Identification (If applicable):
City/State/Zip:	Phone:

RESPONSIBLE PERSON'S DECLARATION STATEMENT

I certify the following under penalty of perjury, under the laws of the State of California:

1. The information provided on this Certificate of Installation is true and correct.
2. I am eligible under Division 3 of the Business and Professions Code in the applicable classification to accept responsibility for the system design, construction, or installation of features, materials, components, or manufactured devices for the scope of work identified on this Certificate of Installation, and attest to the declarations in this statement (responsible builder/installer), otherwise I am an authorized representative of the responsible builder/installer.
3. The constructed or installed features, materials, components or manufactured devices (the installation) identified on this Certificate of Installation conforms to all applicable codes and regulations, and the installation conforms to the requirements given on the plans and specifications approved by the enforcement agency.
4. I reviewed a copy of the Certificate of Compliance approved by the enforcement agency that identifies the specific requirements for the scope of construction or installation identified on this Certificate of Installation, and I have ensured that the requirements that apply to the construction or installation have been met.
5. I will ensure that a registered copy of this Certificate of Installation shall be posted, or made available with the building permit(s) issued for the building, and made available to the enforcement agency for all applicable inspections. I understand that a registered copy of this Certificate of Installation is required to be included with the documentation the builder provides to the building owner at occupancy.

Responsible Builder/Installer Name:	Responsible Builder/Installer Signature:	
Company Name: (Installing Subcontractor or General Contractor or Builder/Owner)	Position With Company (Title):	
Address:	CSLB License:	
City/State/Zip:	Phone	Date Signed:

For information and data collection only. Not valid until registered with a HERS provider.

Instructions for MCH-02

Section A. Whole House Fan Equipment Information

1. User entered Whole House Fan Manufacturer Name.
2. User entered Whole House Fan Model Number.
3. User entered Whole House Fan CFM.
4. User entered number equal to the number of identical Whole House Fans Installed.
5. Total Whole House Fan CFM. This field is automatically calculated when using the online form. The equation used to calculate this value in the field equals line A.3 x line A.4 = Total Whole House Fan CFM.
6. This field is automatically calculated when using the online form. The equation used to calculate this value in the field equals ((line A.5 x 144))/375 CFM) = Minimum Required Attic Ventilation Area in2
7. User entered Installed Attic Ventilation Area (in2) must be the same or larger than required.

Section B. Whole House Fan compliance criteria calculations

1. This field is automatically imported from the CF-1R when using the online form. The number used in the field equals the Conditioned Floor Area (CFA), in square feet, from the CF-1R.
2. This field is automatically calculated when using the online form. The equation used to calculate this value in the field equals line B.1 x 2 = Minimum Required Fan CFM.

C. Compliance Statement

Pass if A 7 is the same or larger than A 6 and A 5 is the same or larger than B 2.

For information and data collection only. Not valid until registered with a HERS provider

EVAPORATIVE COOLERS

CERTIFICATE OF INSTALLATION		CF2R-MCH-04-E
Evaporative Coolers		(Page 1 of 2)
Project Name:	Enforcement Agency:	Permit Number:
Dwelling Address:	City	Zip Code

A. System Information		
Each system requiring verification must use a separate form		
01	System Name or Identification/Tag	
02	System Location or Area Served	
03	Evaporative Cooler System Type	
03	Manufacturer Name of Installed Evaporative Cooler	
04	Manufacturer Model Number of Installed Evaporative Cooler	

B. Installation Criteria	
01	Only indirect or direct/indirect systems may be installed as part of the evaporative cooling compliance option. Direct evaporative coolers do not meet the eligibility criteria.
02	Installed evaporative cooler is listed as an approved non central air conditioner and heat pumps.
03	Equipment shall be permanently installed (no window or portable units).
04	Installation shall provide for automatic relief of supply air from the house with maximum air velocity through the relief dampers not exceeding 800 fpm (at the Title 20 rated airflow). Pressure relief dampers and ductwork shall be distributed to provide adequate airflow through all habitable rooms. For installations with an attic, ceiling dampers shall be installed to relieve air into the attic, and then to outside through attic vents. For installations without an attic, sidewall relief dampers are acceptable.
05	To minimize water consumption, bleed systems are not allowed.
06	A water quality management system (either "pump out" or conductivity sensor) is required. "Pump out" systems can either be integral to the evaporative cooler or they can be accessories that operate on a timed interval. The time interval between dumps shall be set to a minimum of six hours of cooler operation. Longer intervals are encouraged if local water quality allows.
07	The equipment manufacturer shall certify to the Commission that water use does not exceed 7.5 gallons per ton hour based on the Title 20 Appliance Standards testing criteria.
08	Automatic thermostats are required. On/off control is not allowed.
09	If the evaporative cooler duct system is shared with a heating and/or cooling system, the installed duct system shall employ backdraft dampers at the evaporative cooler supply.
10	The installing contractor must provide a winter closure device that substantially blocks outdoor air from entering the indoor space.
11	The size of the water inlet connection at the evaporative cooler shall not exceed 3/8".
12	Unless prohibited by local code, the sump overflow line shall not be directly connected to a drain and shall be terminated in a location that is normally visible to the building occupants.
The responsible person's signature on this document indicates that the installation meets all applicable requirements specified in this Table B.	

For information and data collection only. Not valid until registered with a HERS provider

CERTIFICATE OF INSTALLATION		CF2R-MCH-04-E
Evaporative Coolers		(Page 2 of 2)
Project Name:	Enforcement Agency:	Permit Number:
Dwelling Address:	City	Zip Code

DOCUMENTATION AUTHOR'S DECLARATION STATEMENT

1. I certify that this Certificate of Installation documentation is accurate and complete.

Documentation Author Name:	Documentation Author Signature:
Documentation Author Company Name:	Date Signed:
Address:	CEA/HERS Certification Identification (If applicable):
City/State/Zip:	Phone:

RESPONSIBLE PERSON'S DECLARATION STATEMENT

I certify the following under penalty of perjury, under the laws of the State of California:

1. The information provided on this Certificate of Installation is true and correct.
2. I am eligible under Division 3 of the Business and Professions Code in the applicable classification to accept responsibility for the system design, construction, or installation of features, materials, components, or manufactured devices for the scope of work identified on this Certificate of Installation, and attest to the declarations in this statement (responsible builder/installer), otherwise I am an authorized representative of the responsible builder/installer.
3. The constructed or installed features, materials, components or manufactured devices (the installation) identified on this Certificate of Installation conforms to all applicable codes and regulations, and the installation conforms to the requirements given on the plans and specifications approved by the enforcement agency.
4. I reviewed a copy of the Certificate of Compliance approved by the enforcement agency that identifies the specific requirements for the scope of construction or installation identified on this Certificate of Installation, and I have ensured that the requirements that apply to the construction or installation have been met.
5. I will ensure that a registered copy of this Certificate of Installation shall be posted, or made available with the building permit(s) issued for the building, and made available to the enforcement agency for all applicable inspections. I understand that a registered copy of this Certificate of Installation is required to be included with the documentation the builder provides to the building owner at occupancy.

Responsible Builder/Installer Name:	Responsible Builder/Installer Signature:	
Company Name: (Installing Subcontractor or General Contractor or Builder/Owner)	Position With Company (Title):	
Address:	CSLB License:	
City/State/Zip:	Phone	Date Signed:

For information and data collection only. Not valid until registered with a HERS provider.

Instructions for MCH-04

Section A. Evaporative Cooler Equipment Information

1. This field is automatically imported from the MCH-01-CF-2R when using the online form. The number entered in the field equals evaporative cooler system name or identification/tag from the building plans.
2. This field is automatically imported from the MCH-01-CF-2R when using the online form. The number entered in the field equals evaporative cooler system location or the area served.
3. This field is automatically imported from the MCH-01-CF-2R when using the online form. The number entered in the field equals indirect or direct/indirect.
4. User entered Evaporative Cooler Manufacturer Name.
5. User entered Evaporative Cooler Model Number.

For information and data collection only. Not valid until registered with a HERS provider

ICE STORAGE AIR CONDITIONING (ISAC) UNITS

CERTIFICATE OF INSTALLATION		CF2R-MCH-05-E
Ice Storage Air Conditioning (ISAC) Units		(Page 1 of 2)
Project Name:	Enforcement Agency:	Permit Number:
Dwelling Address:	City	Zip Code

A. ISAC System Requirement on Certificate of Compliance		
01	Manufacturer Name of Modeled Installed Ice Storage Air Conditioner	
02	Model Number of Modeled Ice Storage Air Conditioner	

B. Installed ISAC System Information		
01	Ice Storage Air Conditioner System Name or Identification/Tag	
02	Ice Storage Air Conditioner System Location or Area Served	
03	Ice Storage Air Conditioner System Distribution Type	
04	Ice Storage Air Conditioner System Manufacturer	
05	Ice Storage Air Conditioner System Model Number	
06	Ice Storage Air Conditioner System Serial Number	
06	Ice Storage Air Conditioning System- Certification Status	
07	Duct Leakage Verification Status	
08	Refrigerant Charge Verification Status	
09	Compliance Statement:	

C. Eligibility Criteria	
01	Verify that building cooling is controlled by a standard indoor HVAC thermostat and not by factory installed controls.
02	Verify that ice Making is not controlled by the thermostat.
03	Verify that the water tank is filled to the proper level as specified by the manufacturer.
04	Verify that the correct model number as indicated in compliance documents (including ice melt time). Certify the installed model number on the CF1R.
05	Force the controls to indicate no demand for cooling, set the time to be within the nighttime time period, and simulate that the tank is not full with ice. Verify that the system operates properly in the ice making mode (i.e., it starts charging the tank and does not provide cooling to the building).
06	Force the controls to indicate no demand for cooling, set the time to be within the nighttime time period, and simulate the tank being full of ice. Verify that the system is operates properly in the Idle mode (i.e., the compressor is off, and no cooling via the system is provided).
07	Force the controls to indicate a demand for cooling and set the time to be within the daytime time period. Verify that the system operates properly in the ice melt mode (i.e., it starts discharging and that the compressor is off).
08	Force the controls to indicate a demand for cooling and set the time to be within the morning shoulder time period. Verify that the system operates properly in the Direct Cooling mode (i.e., the system is providing cooling with the compressor).
09	Force the controls to indicate no cooling load, and set the time to be within the daytime period. Verify that the system operates properly in the Idle mode (i.e., it does not provide cooling to the building, and the compressor is off).
10	Force the controls to indicate a demand for cooling and set the time to be within the night time period. Verify that the cooling is provided by the compressor.
11	Eligibility for the ISAC compliance credit requires installation of the same model number that was selected using the Compliance Software and is reported as a special feature on the Certificate of Compliance (CF1R) that was approved by the Enforcement Agency.
The responsible person's signature on this document indicates that the installed ISAC system identified on this document conforms to these requirements specified in Table C – Eligibility Criteria.	

For information and data collection only. Not valid until registered with a HERS provider

CERTIFICATE OF INSTALLATION		CF2R-MCH-05-E
Ice Storage Air Conditioning (ISAC) Units		(Page 2 of 2)
Project Name:	Enforcement Agency:	Permit Number:
Dwelling Address:	City	Zip Code

DOCUMENTATION AUTHOR'S DECLARATION STATEMENT	
1. I certify that this Certificate of Installation documentation is accurate and complete.	
Documentation Author Name:	Documentation Author Signature:
Documentation Author Company Name:	Date Signed:
Address:	CEA/HERS Certification Identification (If applicable):
City/State/Zip:	Phone:

RESPONSIBLE PERSON'S DECLARATION STATEMENT

I certify the following under penalty of perjury, under the laws of the State of California:

1. The information provided on this Certificate of Installation is true and correct.
2. I am eligible under Division 3 of the Business and Professions Code in the applicable classification to accept responsibility for the system design, construction, or installation of features, materials, components, or manufactured devices for the scope of work identified on this Certificate of Installation, and attest to the declarations in this statement (responsible builder/installer), otherwise I am an authorized representative of the responsible builder/installer.
3. The constructed or installed features, materials, components or manufactured devices (the installation) identified on this Certificate of Installation conforms to all applicable codes and regulations, and the installation conforms to the requirements given on the plans and specifications approved by the enforcement agency.
4. I reviewed a copy of the Certificate of Compliance approved by the enforcement agency that identifies the specific requirements for the scope of construction or installation identified on this Certificate of Installation, and I have ensured that the requirements that apply to the construction or installation have been met.
5. I will ensure that a registered copy of this Certificate of Installation shall be posted, or made available with the building permit(s) issued for the building, and made available to the enforcement agency for all applicable inspections. I understand that a registered copy of this Certificate of Installation is required to be included with the documentation the builder provides to the building owner at occupancy.

Responsible Builder/Installer Name:	Responsible Builder/Installer Signature:	
Company Name: (Installing Subcontractor or General Contractor or Builder/Owner)	Position With Company (Title):	
Address:	CSLB License:	
City/State/Zip:	Phone	Date Signed:

For information and data collection only. Not valid until registered with a HERS provider

Instructions for MCH-05

A. ISAC System Requirements on Certificate of Compliance

1. This information is automatically pulled from the CF-1R and equals Manufacturer Name of Modeled Installed Ice Storage Air Conditioner
2. This information is automatically pulled from the CF-1R and equals Model Number of Modeled Ice Storage Air Conditioner

B. Installed ISAC System Information

1. This information is automatically pulled from the MCH-1 and equals Ice Storage Air Conditioner System Name or Identification/Tag
2. This information is automatically pulled from the MCH-1 and equals Ice Storage Air Conditioner System Location or Area Served
3. This information is automatically pulled from the MCH-1 and equals Ice Storage Air Conditioner System Distribution Type
4. This information is automatically pulled from the MCH-1 and equals Ice Storage Air Conditioner System Manufacturer
5. This information is automatically pulled from the MCH-1 and equals Ice Storage Air Conditioner System Model Number
6. This information is automatically pulled from the MCH-1 and equals Ice Storage Air Conditioner System Serial Number
7. Select the Ice Storage Air Conditioner System Certification Status from the choices provided:
   - ISAC Certified by Manufacturer and listed on CEC Website at http://www.energy.ca.gov/??? (Pass)
   - ISAC not Certified (Do Not Continue)
8. This value is automatically calculated and equals:
   - If the system has a registered MCH-20 that meets the duct leakage rate compliance criterion (Pass)
   - If the system doesn't have a registered MCH-20 or has one that doesn't meet the duct leakage rate compliance criterion (Fail)
9. This value is automatically calculated and equals:
   - If the system has a registered MCH-25 that meets the refrigerant charge rate compliance criterion (Pass)
   - If the system doesn't have a registered MCH-25 or has one that doesn't meet the refrigerant charge rate compliance criterion (Fail)

For information and data collection only. Not valid until registered with a HERS provider

DUCT LEAKAGE DIAGNOSTIC TEST

CERTIFICATE OF INSTALLATION		CF2R-MCH-20-H
Duct Leakage Diagnostic Test		(Page 1 of 3)
Project Name:	Enforcement Agency:	Permit Number:
Dwelling Address:	City	Zip Code

A. System Information

1	HVAC System Identification or Name:	
2	HVAC System Location or Area Served:	
3	Building Type from CF-1R	
4	Verified Low Leakage Ducts in Conditioned Space (VLLDCS) Credit from CF-1R?	
5	Verified Low Leakage Air-handling Unit Credit from CF-1R?	
6	Duct System Compliance Category:	

B. Duct Leakage Diagnostic Test - MCH-20a - Completely New Duct System		
1	Condenser Nominal Cooling Capacity (ton)	
2	Heating Capacity (kBtu/h)	
3	Conditioned Floor Area Served by this HVAC System (ft2)	
4	Duct Leakage Test Conditions	
5	Duct Leakage Test Method?	
6	LeakageFactor ( )	
7	Air-Handling Unit Airflow (AHUAirflow) Determination Method	
8	Measured AHUAirflow (cfm)	
9	Calculated Target Allowable Duct Leakage Rate (cfm)	
10	Actual duct leakage rate from leakage test measurement (cfm)	
11	Compliance statement:	

For information and data collection only. Not valid until registered with a HERS provider

CERTIFICATE OF INSTALLATION		CF2R-MCH-20-H
Duct Leakage Diagnostic Test		(Page 2 of 3)
Project Name:	Enforcement Agency:	Permit Number:
Dwelling Address:	City	Zip Code

C. ADDITIONAL REQUIREMENTS FOR COMPLIANCE	
The responsible persons signature on this document indicates the installation complies with the following requirements:	
1.	System was tested in its normal operation condition. No temporary taping allowed.
2.	Outside air (OA) ducts for Central Fan Integrated (CFI) ventilation systems shall not be sealed/taped off during duct leakage testing. CFI OA ducts that utilize controlled motorized dampers, that open only when OA ventilation is required to meet ASHRAE Standard 62.2, and close when OA ventilation is not required, may be configured to the closed position during duct leakage testing.
3.	All supply and return register boots were sealed to the drywall.
4.	Building cavities were not used as plenums or platform returns in lieu of ducts.
5.	If cloth backed tape was used it was covered with Mastic and draw bands.
6.	All connection points between the air handler and the supply and return plenums are completely sealed.
Visual Inspection at Final Construction Stage (applicable if system was tested at rough-in) After installing the interior finishing wall and verifying that the above rough-in tests was completed, the following procedure must be performed	
7.	For all supply and return registers, verify that the spaces between the register boot and the interior finishing wall are properly sealed.
8.	If the house rough-in duct leakage test was conducted without an air handler installed, inspect the connection points between the air handler and the supply and return plenums to verify that the connection points are properly sealed.
9.	Inspect all joints to ensure that no cloth backed rubber adhesive duct tape is used.

For information and data collection only. Not valid until registered with a HERS provider

CERTIFICATE OF INSTALLATION		CF2R-MCH-20-H
Duct Leakage Diagnostic Test		(Page 3 of 3)
Project Name:	Enforcement Agency:	Permit Number:
Dwelling Address:	City	Zip Code

DOCUMENTATION AUTHOR'S DECLARATION STATEMENT

1. I certify that this Certificate of Installation documentation is accurate and complete.

Documentation Author Name:	Documentation Author Signature:
Documentation Author Company Name:	Date Signed:
Address:	CEA/HERS Certification Identification (If applicable):
City/State/Zip:	Phone:

RESPONSIBLE PERSON'S DECLARATION STATEMENT

I certify the following under penalty of perjury, under the laws of the State of California:

1. The information provided on this Certificate of Installation is true and correct.
2. I am eligible under Division 3 of the Business and Professions Code in the applicable classification to accept responsibility for the system design, construction, or installation of features, materials, components, or manufactured devices for the scope of work identified on this Certificate of Installation and attest to the declarations in this statement (responsible builder/installer), otherwise I am an authorized representative of the responsible builder/installer.
3. The constructed or installed features, materials, components or manufactured devices (the installation) identified on this Certificate of Installation conforms to all applicable codes and regulations, and the installation conforms to the requirements given on the plans and specifications approved by the enforcement agency.
4. I understand that a HERS rater will check the installation to verify compliance, and that if such checking identifies defects; I am required to take corrective action at my expense. I understand that Energy Commission and HERS Provider representatives will also perform quality assurance checking of installations, including those approved as part of a sample group but not checked by a HERS rater, and if those installations fail to meet the requirements of such quality assurance checking, the required corrective action and additional checking/testing of other installations in that HERS sample group will be performed at my expense.
5. I reviewed a copy of the Certificate of Compliance approved by the enforcement agency that identifies the specific requirements for the scope of construction or installation identified on this Certificate of Installation, and I have ensured that the requirements that apply to the construction or installation have been met.
6. I will ensure that a registered copy of this Certificate of Installation shall be posted, or made available with the building permit(s) issued for the building, and made available to the enforcement agency for all applicable inspections. I understand that a registered copy of this Certificate of Installation is required to be included with the documentation the builder provides to the building owner at occupancy.

Responsible Builder/Installer Name:	Responsible Builder/Installer Signature:	
Company Name: (Installing Subcontractor or General Contractor or Builder/Owner)	Position With Company (Title):	
Address:	CSLB License:	
City/State/Zip:	Phone	Date Signed:
Third Party Quality Control Program (TPQCP) Status:	Name of TPQCP (if applicable):	

For information and data collection only. Not valid until registered with a HERS provider

A. System Information

1. *HVAC System Identification or Name*: Same data given on MCH-01; provides an identification name or tag name that uniquely identifies the duct system. If there is a mechanical plan for the system, the tag name may be given on the plans.
2. *HVAC System Location or Area Served*: Same data given on MCH-01; provides a brief description of the area served by the duct system (e.g. upstairs; downstairs).
3. *Building Type*: Same data given on CF-1R.
4. *Verified Low Leakage Ducts in Conditioned Space (VLLDCS)*: Same data given on CF-1R; Details whether or not VLLDCS is required per CF-1R.
5. *Verified Low Leakage Air-handling Unit (VLLAHU) Credit*: Same data given on CF-1R; Details whether or not VLLAHU is required per CF-1R.
6. *Duct System Compliance Category*: Choose from Completely New, Complete Replacement, or Alteration.
   a. Completely New System: For new buildings with a new HVAC system.
   b. Complete Replacement System: For existing buildings where a completely new duct system is installed (cut in) or 75 percent or more new duct material, and up to 25 percent may consist of reused parts from the dwelling unit's existing duct system (e.g., registers, grilles, boots, air handler, coil, plenums, duct material).
   c. Alteration: For existing buildings where 40 feet of new or replacement space-conditioning system ducts are installed in unconditioned space or indirectly conditioned space.
   d. Replacement using Smoke Test: For existing buildings where a completely new duct system is installed (cut in) or 75 percent or more new duct material, and up to 25 percent may consist of reused parts from the dwelling unit's existing duct system (e.g., registers, grilles, boots, air handler, coil, plenums, duct material) and for which the target % leakage could not be met. All accessible leaks visible by smoke must be sealed.
   e. Alteration using Smoke Test: For existing buildings where 40 feet of new or replacement space-conditioning system ducts are installed in unconditioned space or indirectly conditioned space and for which the target % leakage could not be met. All accessible leaks visible by smoke must be sealed.

B. Duct Leakage Diagnostic Test - MCH-20a - Completely New Duct System

1. *Condenser Nominal Cooling Capacity (ton)*: Same data given on MCH-01.
2. *Heating Capacity (kBtu/h)*: Same data given on MCH-01; This will be auto-filled from the MCH-01 data.
3. *Conditioned Floor Area Served by this HVAC System(ft^2)*: User must input CFA for the space. Should be consistent with the CF-1R input value.
4. *Duct Leakage Test Conditions*: User must select from the following options:
   a. Test Rough-in AHU: Installers may determine duct leakage in new construction by using diagnostic measurements at rough-in building construction stage prior to installation of interior finishing (See Section RA3.1.4.3.2 of the 2013 Reference Appendices).
   b. Test Rough-in No AHU: Same as "Test Rough-in" except air handling unit is not yet installed (See Section RA3.1.4.3.2 of the 2013 Reference Appendices).
   c. Test Final: Test conducted at final inspection (rough-in no longer an option. See Section RA3.1.4.3.1 of the 2013 Reference Appendices).
5. *Duct Leakage Test Method*: User will select from the following options: Leakage to the Outside, or Total Leakage.
6. *Leakage Factor*: Depending on answers to A3, B4, and B5, a leakage factor of 0.04, 0.06, or 0.12 will automatically populate.
7. *Air-Handling Unit Airflow (AHUAirflow) Determination Method*: User will select from the following options:
   a. Default Airflow Method: The Default Airflow Method may only be used for homes where the duct system is being tested before the conditioning and heating system is installed and the equipment specification is not known (See Section RA3.1.4.2.1 of the 2013 Reference Appendices).
   b. Cooling System Method: For systems with cooling, this selection must be made, and the nominal air handler airflow shall be 400 CFM per nominal ton of condensing unit cooling capacity as specified by the manufacturer or the heating only value, whichever is greater (See Section RA3.1.4.2.2 of the 2013 Reference Appendices).

For information and data collection only. Not valid until registered with a HERS provider

c. Heating System Method: For heating only systems the nominal air handler airflow shall be 21.7 CFM per kBtu/hr of rated heating output capacity.

d. Measured Airflow Method: The system airflow can be used as the air handler airflow for the purpose of establishing duct leakage percentage (See Section RA3.1.4.2.3 of the 2013 Reference Appendices).

8. *Measured AHU Airflow (CFM)*: If "Measured Airflow Method" is selected in row 7, user must input measured airflow.
9. *Calculated Target Allowable Duct Leakage Rate (cfm)*: This value will be automatically populated depending on values in B6, B7, and B8.
10. *Actual Duct Leakage Rate from Leakage Test Measurement (cfm)*: User will input this value from actual measurements from leakage test.
11. *Compliance Statement*: If Actual Duct Leakage Rate from leakage test (B10) is less than or equal to Calculated Target Allowable Duct Leakage Rate, "System passes leakage test" will automatically populate. If not, "System fails leakage test" will automatically populate.

For information and data collection only. Not valid until registered with a HERS provider

DUCT LEAKAGE DIAGNOSTIC TEST

CERTIFICATE OF INSTALLATION		CF2R-MCH-20-H
Duct Leakage Diagnostic Test		(Page 1 of 2)
Project Name:	Enforcement Agency:	Permit Number:
Dwelling Address:	City	Zip Code

A. System Information

01	HVAC System Identification or Name:	
02	HVAC System Location or Area Served:	
03	Building Type from CF1R	
04	Verified Low Leakage Ducts in Conditioned Space (VLLDCS) Credit from CF1R?	
05	Verified Low Leakage Air-handling Unit Credit from CF1R?	
06	Duct System Compliance Category:	

B. 20b. Duct Leakage Diagnostic Test - Low Leakage Ducts in Conditioned Space		
01	System compliance with visual inspection per RA3.1.4.1.3? (registered MCH-21 is required)	
02	Duct Leakage Test Conditions	
03	Duct Leakage Test Method	
04	Target Allowable Duct Leakage Rate (cfm)	
05	Actual duct leakage rate from leakage test measurement (cfm)	
06	Compliance statement:	

C. ADDITIONAL REQUIREMENTS FOR COMPLIANCE	
The responsible persons signature on this document indicates the installation complies with the following requirements:	
01	System was tested in its normal operation condition. No temporary taping allowed.
02	Outside air (OA) ducts for Central Fan Integrated (CFI) ventilation systems, shall not be sealed/taped off during duct leakage testing. CFI OA ducts that utilize controlled motorized dampers, that open only when OA ventilation is required to meet ASHRAE Standard 62.2, and close when OA ventilation is not required, may be configured to the closed position during duct leakage testing.
03	All supply and return register boots were sealed to the drywall.
04	Building cavities were not used as plenums or platform returns in lieu of ducts.
05	If cloth backed tape was used it was covered with Mastic and draw bands.
06	All connection points between the air handler and the supply and return plenums are completely sealed.

For information and data collection only. Not valid until registered with a HERS provider

CERTIFICATE OF INSTALLATION		CF2R-MCH-20-H
Duct Leakage Diagnostic Test		(Page 2 of 2)
Project Name:	Enforcement Agency:	Permit Number:
Dwelling Address:	City	Zip Code

DOCUMENTATION AUTHOR'S DECLARATION STATEMENT

1. I CERTIFY THAT THIS CERTIFICATE OF INSTALLATION DOCUMENTATION IS ACCURATE AND COMPLETE.

Documentation Author Name:	Documentation Author Signature:
Documentation Author Company Name:	Date Signed:
Address:	CEA/HERS Certification Identification (If applicable):
City/State/Zip:	Phone:

RESPONSIBLE PERSON'S DECLARATION STATEMENT

I certify the following under penalty of perjury, under the laws of the State of California:

1. The information provided on this Certificate of Installation is true and correct.
2. I am eligible under Division 3 of the Business and Professions Code in the applicable classification to accept responsibility for the system design, construction, or installation of features, materials, components, or manufactured devices for the scope of work identified on this Certificate of Installation and attest to the declarations in this statement (responsible builder/installer), otherwise I am an authorized representative of the responsible builder/installer.
3. The constructed or installed features, materials, components or manufactured devices (the installation) identified on this Certificate of Installation conforms to all applicable codes and regulations, and the installation conforms to the requirements given on the plans and specifications approved by the enforcement agency.
4. I understand that a HERS rater will check the installation to verify compliance, and that if such checking identifies defects; I am required to take corrective action at my expense. I understand that Energy Commission and HERS Provider representatives will also perform quality assurance checking of installations, including those approved as part of a sample group but not checked by a HERS rater, and if those installations fail to meet the requirements of such quality assurance checking, the required corrective action and additional checking/testing of other installations in that HERS sample group will be performed at my expense.
5. I reviewed a copy of the Certificate of Compliance approved by the enforcement agency that identifies the specific requirements for the scope of construction or installation identified on this Certificate of Installation, and I have ensured that the requirements that apply to the construction or installation have been met.
6. I will ensure that a registered copy of this Certificate of Installation shall be posted, or made available with the building permit(s) issued for the building, and made available to the enforcement agency for all applicable inspections. I understand that a registered copy of this Certificate of Installation is required to be included with the documentation the builder provides to the building owner at occupancy.

Responsible Builder/Installer Name:	Responsible Builder/Installer Signature:	
Company Name: (Installing Subcontractor or General Contractor or Builder/Owner)	Position With Company (Title):	
Address:	CSLB License:	
City/State/Zip:	Phone	Date Signed:
Third Party Quality Control Program (TPQCP) Status:	Name of TPQCP (if applicable):	

For information and data collection only. Not valid until registered with a HERS provider

A. System Information

1. *HVAC System Identification or Name:* Same data given on MCH-01; provides an identification name or tag name that uniquely identifies the duct system. If there is a mechanical plan for the system, the tag name may be given on the plans.
2. *HVAC System Location or Area Served:* Same data given on MCH-01; provides a brief description of the area served by the duct system (e.g. upstairs; downstairs).
3. *Building Type:* Same data given on CF1R.
4. *Verified Low Leakage Ducts in Conditioned Space (VLLDCS):* Same data given on CF1R; Details whether or not VLLDCS is required per CF1R.
5. *Verified Low Leakage Air-handling Unit (VLLAHU) Credit:* Same data given on CF1R; Details whether or not VLLAHU is required per CF1R.
6. *Duct System Construction Type:* Choose from Completely New, Complete Replacement, or Alteration.
   a. Completely New System: For new buildings with a new HVAC system.
   b. Complete Replacement System: For existing buildings where a completely new duct system is installed (cut in) or 75 percent or more new duct material, and up to 25 percent may consist of reused parts from the dwelling unit's existing duct system (e.g., registers, grilles, boots, air handler, coil, plenums, duct material).
   c. Alteration: For existing buildings where 40 feet of new or replacement space-conditioning system ducts are installed in unconditioned space or indirectly conditioned space.
   d. Replacement using Smoke Test: For existing buildings where a completely new duct system is installed (cut in) or 75 percent or more new duct material, and up to 25 percent may consist of reused parts from the dwelling unit's existing duct system (e.g., registers, grilles, boots, air handler, coil, plenums, duct material) and for which the target % leakage could not be met. All accessible leaks visible by smoke must be sealed.
   e. Alteration using Smoke Test: For existing buildings where 40 feet of new or replacement space-conditioning system ducts are installed in unconditioned space or indirectly conditioned space and for which the target % leakage could not be met. All accessible leaks visible by smoke must be sealed.

B. 20b. Duct Leakage Diagnostic Test - Low Leakage Ducts in Conditioned Space

1. *System compliance with visual inspection per RA3.1.4.1.2? (registered MCH-21 is required)*: This field will be automatically filled. A MCH-21 must be registered to certify a visual inspection confirms the space conditioning system is located entirely in conditioned space in accordance with RA3.1.4.1.3. If any part of the duct system is outside of conditioned space, the system does not pass.
2. *Duct Leakage Test Conditions*: This field will be automatically filled. The entire duct system shall be included in the total leakage test. The air handler, supply and return plenums and all the connectors, transition pieces, duct boots and registers must be installed and tested to total system leakage. All supply registers shall be taped so that the tape goes over the grills and attaches to the surrounding drywall. All return grilles except for one large centrally located return grille or the air handler cabinet access panel shall be taped up.
3. *Duct Leakage Test Method*: This field will be automatically filled. Leakage to outside shall be verified by pressurizing the dwelling and the ducts to 25 Pa (0.1 inches of water) **with respect to outside**. A full description of these procedures can be found in RA3.1.4.3.4.
4. *Target Allowable Duct Leakage Rate (cfm)*: This field will be automatically filled. In order to pass this test duct leakage must be equal to or less than 25 cfm when the dwelling and ducts are pressurized to 25 Pa with respect to outside. NOTE; The 25 cfm leakage value will be difficult to reach unless the ducts are located in conditioned space.
5. *Actual Duct Leakage Rate from Leakage Test Measurement (cfm)*: Enter the actual leakage from the test.
6. *Compliance statement:* This field will be automatically filled. The test passes if actual leakage rate is less than or equal to 25 cfm and a MCH-21 has been registered.

For information and data collection only. Not valid until registered with a HERS provider

DUCT LEAKAGE DIAGNOSTIC TEST

CERTIFICATE OF INSTALLATION		CF2R-MCH-20-H
Duct Leakage Diagnostic Test		(Page 1 of 3)
Project Name:	Enforcement Agency:	Permit Number:
Dwelling Address:	City	Zip Code

A. System Information

1	HVAC System Identification or Name:	
2	HVAC System Location or Area Served:	
3	Building Type from CF-1R	
4	Verified Low Leakage Ducts in Conditioned Space (VLLDCS) Credit from CF-1R?	
5	Verified Low Leakage Air-handling Unit Credit from CF-1R?	
6	Duct System Compliance Category:	

B. Duct Leakage Diagnostic Test - MCH-20c - Low Leakage Air-Handling Unit (LLAHU)		
1	Condenser Nominal Cooling Capacity (ton)	
2	Heating Capacity (kBtu/h)	
3	Conditioned Floor Area Served by this HVAC System (ft2)	
4	Duct Leakage Test Conditions	
5	Duct Leakage Test Method?	
6	LeakageFactor ( )	
7	Air-Handling Unit Airflow (AHUAirflow) Determination Method	
8	Measured AHUAirflow (cfm)	
9	Calculated Target Allowable Duct Leakage Rate (cfm)	
10	Actual duct leakage rate from leakage test measurement (cfm)	
11	Air-Handling Unit Manufacturer Name	
12	Air-Handling Unit Model Number	
13	Compliance statement:	

For information and data collection only. Not valid until registered with a HERS provider

CERTIFICATE OF INSTALLATION		CF2R-MCH-20-H
Duct Leakage Diagnostic Test		(Page 2 of 3)
Project Name:	Enforcement Agency:	Permit Number:
Dwelling Address:	City	Zip Code

C. ADDITIONAL REQUIREMENTS FOR COMPLIANCE	
The responsible persons signature on this document indicates the installation complies with the following requirements:	
1.	**The Low Leakage Air-handling Unit Model identified on this compliance document is included in the list of certified Low Leakage Air-Handling Units published on the Energy Commission Website at:** http://www.energy.ca.gov/title24/2008standards/special_case_appliance/supplemental_listings/Low_Leakage_Air-Handling_Unit_Listing_2012-10-30.pdf (provide updated link).
2.	System was tested in its normal operation condition. No temporary taping allowed.
3.	Outside air (OA) ducts for Central Fan Integrated (CFI) ventilation systems, shall not be sealed/taped off during duct leakage testing. CFI OA ducts that utilize controlled motorized dampers, that open only when OA ventilation is required to meet ASHRAE Standard 62.2, and close when OA ventilation is not required, may be configured to the closed position during duct leakage testing.
4.	All supply and return register boots were sealed to the drywall.
5.	Building cavities were not used as plenums or platform returns in lieu of ducts.
6.	If cloth backed tape was used it was covered with Mastic and draw bands.
7.	All connection points between the air handler and the supply and return plenums are completely sealed.

For information and data collection only. Not valid until registered with a HERS provider

CERTIFICATE OF INSTALLATION		CF2R-MCH-20-H
Duct Leakage Diagnostic Test		(Page 3 of 3)
Project Name:	Enforcement Agency:	Permit Number:
Dwelling Address:	City	Zip Code

DOCUMENTATION AUTHOR'S DECLARATION STATEMENT

1. I certify that this Certificate of Installation documentation is accurate and complete.

Documentation Author Name:	Documentation Author Signature:
Documentation Author Company Name:	Date Signed:
Address:	CEA/CEPE/HERS certification identification (If applicable):
City/State/Zip:	Phone:

RESPONSIBLE PERSON'S DECLARATION STATEMENT

I certify the following under penalty of perjury, under the laws of the State of California:

1. The information provided on this Certificate of Installation is true and correct.
2. I am eligible under Division 3 of the Business and Professions Code to accept responsibility for the scope of construction or installation, in the applicable classification, for the scope of work specified on this Certificate of Installation (responsible builder/installer), otherwise I am an authorized representative of the responsible builder/installer.
3. The constructed or installed features, materials, components or manufactured devices (the installation) identified on this Certificate of Installation conforms to all applicable codes and regulations, and the installation conforms to the requirements given on the plans and specifications approved by the enforcement agency.
4. I understand that a HERS rater will check the installation to verify compliance, and that if such checking identifies defects; I am required to take corrective action at my expense. I understand that Energy Commission and HERS Provider representatives will also perform quality assurance checking of installations, including those approved as part of a sample group but not checked by a HERS rater, and if those installations fail to meet the requirements of such quality assurance checking, the required corrective action and additional checking/testing of other installations in that HERS sample group will be performed at my expense.
5. I reviewed a copy of the Certificate of Compliance approved by the enforcement agency that identifies the specific requirements for the scope of construction or installation identified on this Certificate of Installation, and I have ensured that the requirements that apply to the construction or installation have been met.
6. I will ensure that a registered copy of this Certificate of Installation shall be posted, or made available with the building permit(s) issued for the building, and made available to the enforcement agency for all applicable inspections. I understand that a registered copy of this Certificate of Installation is required to be included with the documentation the builder provides to the building owner at occupancy.

Responsible Builder/Installer Name:	Responsible Builder/Installer Signature:	
Company Name: (Installing Subcontractor or General Contractor or Builder/Owner)	Position With Company (Title):	
Address:	CSLB License:	
City/State/Zip:	Phone	Date Signed:
Third Party Quality Control Program (TPQCP) Status:	Name of TPQCP (if applicable):	

For information and data collection only. Not valid until registered with a HERS provider

A. System Information

1. *HVAC System Identification or Name*: Same data given on MCH-01; provides an identification name or tag name that uniquely identifies the duct system. If there is a mechanical plan for the system, the tag name may be given on the plans.
2. *HVAC System Location or Area Served*: Same data given on MCH-01; provides a brief description of the area served by the duct system (e.g. upstairs; downstairs).
3. *Building Type*: Same data given on CF-1R.
4. *Verified Low Leakage Ducts in Conditioned Space (VLLDCS)*: Same data given on CF-1R; Details whether or not VLLDCS is required per CF-1R.
5. *Verified Low Leakage Air-handling Unit (VLLAHU) Credit*: Same data given on CF-1R; Details whether or not VLLAHU is required per CF-1R.
6. *Duct System Compliance Category*: Choose from Completely New, Complete Replacement, or Alteration.
   a. Completely New System: For new buildings with a new HVAC system.
   b. Complete Replacement System: For existing buildings where a completely new duct system is installed (cut in) or 75 percent or more new duct material, and up to 25 percent may consist of reused parts from the dwelling unit's existing duct system (e.g., registers, grilles, boots, air handler, coil, plenums, duct material).
   c. Alteration: For existing buildings where 40 feet of new or replacement space-conditioning system ducts are installed in unconditioned space or indirectly conditioned space.
   d. Replacement using Smoke Test: For existing buildings where a completely new duct system is installed (cut in) or 75 percent or more new duct material, and up to 25 percent may consist of reused parts from the dwelling unit's existing duct system (e.g., registers, grilles, boots, air handler, coil, plenums, duct material) and for which the target % leakage could not be met. All accessible leaks visible by smoke must be sealed.
   e. Alteration using Smoke Test: For existing buildings where 40 feet of new or replacement space-conditioning system ducts are installed in unconditioned space or indirectly conditioned space and for which the target % leakage could not be met. All accessible leaks visible by smoke must be sealed.

B. Duct Leakage Diagnostic Test - MCH-20c - Low Leakage Air-Handling Unit (LLAHU)

1. *Condenser Nominal Cooling Capacity (ton)*: Same data given on MCH-01.
2. *Heating Capacity (kBtu/h)*: Same data given on MCH-01; This will be auto-filled from the MCH-01 data.
3. *Conditioned Floor Area Served by this HVAC System (ft2)*: User will input CFA for zone which should be consistent with the value from the CF-1R. User will have the option to leave this field blank because the zone CFA is only required for the default airflow calculation.
4. *Duct Leakage Test Conditions*: User must select from the following options:
   a. Test Final: Test conducted at final inspection (rough-in no longer an option. See Section RA3.1.4.3.1 of the 2013 Reference Appendices).
5. *Duct Leakage Test Method?*: User will select from the following options: Total Leakage.
6. *LeakageFactor ( )*: value will be automatically populated from in CF-1R.
7. *Air-Handling Unit Airflow (AHUAirflow) Determination Method*: User will select from the following options:
   a. Default Airflow Method: The Default Airflow Method may only be used for homes where the duct system is being tested before the conditioning and heating system is installed and the equipment specification is not known (See Section RA3.1.4.2.1 of the 2013 Reference Appendices).
   b. Cooling System Method: For systems with cooling, this selection must be made, and the nominal air handler airflow shall be 400 CFM per nominal ton of condensing unit cooling capacity as specified by the manufacturer or the heating only value, whichever is greater (See Section RA3.1.4.2.2 of the 2013 Reference Appendices).
   c. Heating System Method: For heating only systems the nominal air handler airflow shall be 21.7 CFM per kBtu/hr of rated heating output capacity.

For information and data collection only. Not valid until registered with a HERS provider

d. Measured Airflow Method: The system airflow can be used as the air handler airflow for the purpose of establishing duct leakage percentage (See Section RA3.1.4.2.3 of the 2013 Reference Appendices).

8. *Measured AHUAirflow (cfm)*: If "Measured Airflow Method" is selected in row 7, user must input measured airflow.
9. *Calculated Target Allowable Duct Leakage Rate (cfm)*: This value will be automatically populated depending on values in B6, B7, and B8.
10. *Actual Duct Leakage Rate from Leakage Test Measurement (cfm)*: User will input this value from actual measurements from leakage test.
11. *Air-Handling Unit Manufacturer Name*: This will be automatically populated from information entered in the MCH-01.
12. *Air-Handling Unit Model Number*: This will be automatically populated from information entered in the MCH-01.
13. *Compliance Statement*: If Actual Duct Leakage Rate from leakage test (B10) is less than or equal to Calculated Target Allowable Duct Leakage Rate (B9), "System passes leakage test" will automatically populate. If not, "System fails leakage test will automatically populate.

For information and data collection only. Not valid until registered with a HERS provider

DUCT LEAKAGE DIAGNOSTIC TEST

CERTIFICATE OF INSTALLATION		CF2R-MCH-20-H
Duct Leakage Diagnostic Test		(Page 1 of 3)
Project Name:	Enforcement Agency:	Permit Number:
Dwelling Address:	City	Zip Code

A. System Information

1	HVAC System Identification or Name:	
2	HVAC System Location or Area Served:	
3	Building Type from CF-1R	
4	Verified Low Leakage Ducts in Conditioned Space (VLLDCS) Credit from CF-1R?	
5	Verified Low Leakage Air-handling Unit Credit from CF-1R?	
6	Duct System Compliance Category:	

B. Duct Leakage Diagnostic Test - MCH-20d - Complete Replacement or Altered Duct System		
1	Condenser Nominal Cooling Capacity (ton)	
2	Heating Capacity (kBtu/h)	
3	Conditioned Floor Area Served by this HVAC System (ft2)	
4	Duct Leakage Test Conditions	
5	Duct Leakage Test Method?	
6	LeakageFactor ( )	
7	Air-Handling Unit Airflow (AHUAirflow) Determination Method	
8	Measured AHUAirflow (cfm)	
9	Calculated Target Allowable Duct Leakage Rate (cfm)	
10	Actual duct leakage rate from leakage test measurement (cfm)	
11	Compliance statement:	

For information and data collection only. Not valid until registered with a HERS provider

C. ADDITIONAL REQUIREMENTS FOR COMPLIANCE

The responsible persons signature on this document indicates the installation complies with the following requirements:

1.	System was tested in its normal operation condition. No temporary taping allowed.
2.	Outside air (OA) ducts for Central Fan Integrated (CFI) ventilation systems, shall not be sealed/taped off during duct leakage testing. CFI OA ducts that utilize controlled motorized dampers, that open only when OA ventilation is required to meet ASHRAE Standard 62.2, and close when OA ventilation is not required, may be configured to the closed position during duct leakage testing.
3.	All supply and return register boots were sealed to the drywall.
4.	Building cavities were not used as plenums or platform returns in lieu of ducts.
5.	If cloth backed tape was used it was covered with Mastic and draw bands.
6.	All connection points between the air handler and the supply and return plenums are completely sealed.
7.	If the system complies using the Smoke Test method, the smoke test was conducted in accordance with the requirements of Reference Residential Appendix RA3.1.4.3.6. Systems that comply using smoke test shall not be included in sample groups for HERS verification compliance.

For information and data collection only. Not valid until registered with a HERS provider

CERTIFICATE OF INSTALLATION		CF2R-MCH-20-H
Duct Leakage Diagnostic Test		(Page 3 of 3)
Project Name:	Enforcement Agency:	Permit Number:
Dwelling Address:	City	Zip Code

DOCUMENTATION AUTHOR'S DECLARATION STATEMENT

1. I CERTIFY THAT THIS CERTIFICATE OF INSTALLATION DOCUMENTATION IS ACCURATE AND COMPLETE.

Documentation Author Name:	Documentation Author Signature:
Documentation Author Company Name:	Date Signed:
Address:	CEA/HERS Certification Identification (If applicable):
City/State/Zip:	Phone:

RESPONSIBLE PERSON'S DECLARATION STATEMENT

I certify the following under penalty of perjury, under the laws of the State of California:

1. The information provided on this Certificate of Installation is true and correct.
2. I am eligible under Division 3 of the Business and Professions Code in the applicable classification to accept responsibility for the system design, construction, or installation of features, materials, components, or manufactured devices for the scope of work identified on this Certificate of Installation and attest to the declarations in this statement (responsible builder/installer), otherwise I am an authorized representative of the responsible builder/installer.
3. The constructed or installed features, materials, components or manufactured devices (the installation) identified on this Certificate of Installation conforms to all applicable codes and regulations, and the installation conforms to the requirements given on the plans and specifications approved by the enforcement agency.
4. I understand that a HERS rater will check the installation to verify compliance, and that if such checking identifies defects; I am required to take corrective action at my expense. I understand that Energy Commission and HERS Provider representatives will also perform quality assurance checking of installations, including those approved as part of a sample group but not checked by a HERS rater, and if those installations fail to meet the requirements of such quality assurance checking, the required corrective action and additional checking/testing of other installations in that HERS sample group will be performed at my expense.
5. I reviewed a copy of the Certificate of Compliance approved by the enforcement agency that identifies the specific requirements for the scope of construction or installation identified on this Certificate of Installation, and I have ensured that the requirements that apply to the construction or installation have been met.
6. I will ensure that a registered copy of this Certificate of Installation shall be posted, or made available with the building permit(s) issued for the building, and made available to the enforcement agency for all applicable inspections. I understand that a registered copy of this Certificate of Installation is required to be included with the documentation the builder provides to the building owner at occupancy.

Responsible Builder/Installer Name:	Responsible Builder/Installer Signature:	
Company Name: (Installing Subcontractor or General Contractor or Builder/Owner)	Position With Company (Title):	
Address:	CSLB License:	
City/State/Zip:	Phone	Date Signed:
Third Party Quality Control Program (TPQCP) Status:	Name of TPQCP (if applicable):	

For information and data collection only. Not valid until registered with a HERS provider

CF-2R-MCH-20-HERS Instructions

A. System Information

1. *HVAC System Identification or Name*: Same data given on MCH-01; provides an identification name or tag name that uniquely identifies the duct system. If there is a mechanical plan for the system, the tag name may be given on the plans.
2. *HVAC System Location or Area Served*: Same data given on MCH-01; provides a brief description of the area served by the duct system (e.g. upstairs; downstairs).
3. *Building Type*: Same data given on CF-1R.
4. *Verified Low Leakage Ducts in Conditioned Space (VLLDCS):* Same data given on CF-1R; Details whether or not VLLDCS is required per CF-1R.
5. *Verified Low Leakage Air-handling Unit (VLLAHU) Credit*: Same data given on CF-1R; Details whether or not VLLAHU is required per CF-1R.
6. *Duct System Construction Type*: Choose from Completely New, Complete Replacement, or Alteration.
   a. Completely New System: For new buildings with a new HVAC system.
   b. Complete Replacement System: For existing buildings where a completely new duct system is installed (cut in) or 75 percent or more new duct material, and up to 25 percent may consist of reused parts from the dwelling unit's existing duct system (e.g., registers, grilles, boots, air handler, coil, plenums, duct material).
   c. Alteration: For existing buildings where 40 feet of new or replacement space-conditioning system ducts are installed in unconditioned space or indirectly conditioned space.
   d. Replacement using Smoke Test: For existing buildings where a completely new duct system is installed (cut in) or 75 percent or more new duct material, and up to 25 percent may consist of reused parts from the dwelling unit's existing duct system (e.g., registers, grilles, boots, air handler, coil, plenums, duct material) and for which the target % leakage could not be met. All accessible leaks visible by smoke must be sealed.
   e. Alteration using Smoke Test: For existing buildings where 40 feet of new or replacement space-conditioning system ducts are installed in unconditioned space or indirectly conditioned space and for which the target % leakage could not be met. All accessible leaks visible by smoke must be sealed.

B. Duct Leakage Diagnostic Test - MCH-20d - Complete Replacement or Altered Duct System

1. *Condenser Nominal Cooling Capacity (ton)*: Same data given on MCH-01.
2. *Heating Capacity (kBtu/h)*: Same data given on MCH-01; This field will be automatically-filled from the MCH-01 data.
3. *Conditioned Floor Area Served by this HVAC System (ft2)*: User must input CFA for the space. Should be consistent with the CF-1R input value.
4. *Duct Leakage Test Conditions*: User must select from the following options:
   a. Test Final: Test conducted at final inspection (rough-in no longer an option. See Section RA3.1.4.3.1 of the 2013 Reference Appendices).
   b. Smoke Test: For altered existing ducts that fail the leakage tests, the objective of the smoke test is to confirm that all accessible leaks have been sealed (See Section RA3.1.4.3.6 of the 2013 Reference Appendices).
5. *Duct Leakage Test Method*: User will select from the following options: Leakage to the Outside, or Total Leakage.
6. *Leakage Factor*: Depending on answers to A6, B4, and B5, 0.6, 0.10, or 0.15 will automatically populate.
7. *Air-Handler Unit Airflow (AHUAirflow) Determination Method*: User will select from the following options:
   a. Default Airflow Method: The Default Airflow Method may only be used for homes where the duct system is being tested before the conditioning and heating system is installed and the equipment specification is not known (See Section RA3.1.4.2.1 of the 2013 Reference Appendices).
   b. Cooling System Method: For systems with cooling, this selection must be made, and the nominal air handler airflow shall be 400 CFM per nominal ton of condensing unit cooling capacity as specified by the manufacturer or the heating only value, whichever is greater (See Section RA3.1.4.2.2 of the 2013 Reference Appendices).

For information and data collection only. Not valid until registered with a HERS provider

c. Heating System Method: For heating only systems the nominal air handler airflow shall be 21.7 CFM per kBtu/hr of rated heating output capacity.

d. Measured Airflow Method: The system airflow can be used as the air handler airflow for the purpose of establishing duct leakage percentage (See Section RA3.1.4.2.3 of the 2013 Reference Appendices).

8. *Measured AHU Airflow (CFM)*: If "Measured Airflow Method" is selected in B7, user must input measured airflow.
9. *Calculated Target Allowable Duct Leakage Rate (cfm)*: This value will be automatically populated depending on values in earlier cells of this table.
10. *Actual duct leakage rate from leakage test measurement (cfm)*: User will input this value from actual measurements from leakage test.
11. *Compliance Statement*: If measured leakage (B10) is less than or equal to allowable duct leakage rate (B9), "system passes leakage test" will automatically populate. If measured leakage is greater than allowable duct leakage rate, "system fails leakage test" will automatically populate.
    If measured leakage rate is greater than allowable duct leakage rate and "smoke test" is selected for compliance method (B4), Installer must satisfy the requirements of Section RA3.1.4.3.6 Smoke-Test of Accessible Duct Sealing.

For information and data collection only. Not valid until registered with a HERS provider

DUCT LEAKAGE DIAGNOSTIC TEST

CERTIFICATE OF INSTALLATION		CF2R-MCH-20-H
Duct Leakage Diagnostic Test		(Page 1 of 3)
Project Name:	Enforcement Agency:	Permit Number:
Dwelling Address:	City	Zip Code

A. System Information

1	HVAC System Identification or Name:	
2	HVAC System Location or Area Served:	
3	Building Type from CF-1R	
4	Verified Low Leakage Ducts in Conditioned Space (VLLDCS) Credit from CF-1R?	
5	Verified Low Leakage Air-handling Unit Credit from CF-1R?	
6	Duct System Compliance Category:	

B. Duct Leakage Diagnostic Test - MCH-20e - Sealing All Accessible Leaks using Smoke Test		
1	Condenser Nominal Cooling Capacity (ton)	
2	Heating Capacity (kBtu/h)	
3	Conditioned Floor Area Served by this HVAC System (ft2)	
4	Duct Leakage Test Conditions	
5	Duct Leakage Test Method?	
6	LeakageFactor ( )	
7	Air-Handling Unit Airflow (AHUAirflow) Determination Method	
8	Measured AHU Airflow (cfm)	
9	Calculated Target Allowable Duct Leakage Rate (cfm)	
10	Actual duct leakage rate from leakage test measurement (cfm)	
11	Compliance statement:	

For information and data collection only. Not valid until registered with a HERS provider

CERTIFICATE OF INSTALLATION		CF2R-MCH-20-H
Duct Leakage Diagnostic Test		(Page 2 of 3)
Project Name:	Enforcement Agency:	Permit Number:
Dwelling Address:	City	Zip Code

C. ADDITIONAL REQUIREMENTS FOR COMPLIANCE	
The responsible persons signature on this document indicates the installation complies with the following requirements:	
1.	System was tested in its normal operation condition. No temporary taping allowed.
2.	Outside air (OA) ducts for Central Fan Integrated (CFI) ventilation systems, shall not be sealed/taped off during duct leakage testing. CFI OA ducts that utilize controlled motorized dampers, that open only when OA ventilation is required to meet ASHRAE Standard 62.2, and close when OA ventilation is not required, may be configured to the closed position during duct leakage testing.
3.	All supply and return register boots were sealed to the drywall.
4.	Building cavities were not used as plenums or platform returns in lieu of ducts.
5.	If cloth backed tape was used it was covered with Mastic and draw bands.
6.	All connection points between the air handler and the supply and return plenums are completely sealed.
7.	If the system complies using the Smoke Test method, the smoke test was conducted in accordance with the requirements of Reference Residential Appendix RA3.1.4.3.6. Systems that comply using smoke test shall not be included in sample groups for HERS verification compliance.

For information and data collection only. Not valid until registered with a HERS provider

CERTIFICATE OF INSTALLATION		CF2R-MCH-20-H
Duct Leakage Diagnostic Test		(Page 3 of 3)
Project Name:	Enforcement Agency:	Permit Number:
Dwelling Address:	City	Zip Code

DOCUMENTATION AUTHOR'S DECLARATION STATEMENT

1. I certify that this Certificate of Installation documentation is accurate and complete.

Documentation Author Name:	Documentation Author Signature:
Documentation Author Company Name:	Date Signed:
Address:	CEA/HERS Certification Identification (If applicable):
City/State/Zip:	Phone:

RESPONSIBLE PERSON'S DECLARATION STATEMENT

I certify the following under penalty of perjury, under the laws of the State of California:

1. The information provided on this Certificate of Installation is true and correct.
2. I am eligible under Division 3 of the Business and Professions Code in the applicable classification to accept responsibility for the system design, construction, or installation of features, materials, components, or manufactured devices for the scope of work identified on this Certificate of Installation and attest to the declarations in this statement (responsible builder/installer), otherwise I am an authorized representative of the responsible builder/installer.
3. The constructed or installed features, materials, components or manufactured devices (the installation) identified on this Certificate of Installation conforms to all applicable codes and regulations, and the installation conforms to the requirements given on the plans and specifications approved by the enforcement agency.
4. I understand that a HERS rater will check the installation to verify compliance, and that if such checking identifies defects; I am required to take corrective action at my expense. I understand that Energy Commission and HERS Provider representatives will also perform quality assurance checking of installations, including those approved as part of a sample group but not checked by a HERS rater, and if those installations fail to meet the requirements of such quality assurance checking, the required corrective action and additional checking/testing of other installations in that HERS sample group will be performed at my expense.
5. I reviewed a copy of the Certificate of Compliance approved by the enforcement agency that identifies the specific requirements for the scope of construction or installation identified on this Certificate of Installation, and I have ensured that the requirements that apply to the construction or installation have been met.
6. I will ensure that a registered copy of this Certificate of Installation shall be posted, or made available with the building permit(s) issued for the building, and made available to the enforcement agency for all applicable inspections. I understand that a registered copy of this Certificate of Installation is required to be included with the documentation the builder provides to the building owner at occupancy.

Responsible Builder/Installer Name:	Responsible Builder/Installer Signature:	
Company Name: (Installing Subcontractor or General Contractor or Builder/Owner)	Position With Company (Title):	
Address:	CSLB License:	
City/State/Zip:	Phone	Date Signed:
Third Party Quality Control Program (TPQCP) Status:	Name of TPQCP (if applicable):	

For information and data collection only. Not valid until registered with a HERS provider

CF-2R-MCH-20-HERS Instructions

A. System Information

1. *HVAC System Identification or Name*: Same data given on MCH-01; provides an identification name or tag name that uniquely identifies the duct system. If there is a mechanical plan for the system, the tag name may be given on the plans.
2. *HVAC System Location or Area Served*: Same data given on MCH-01; provides a brief description of the area served by the duct system (e.g. upstairs; downstairs).
3. *Building Type*: Same data given on CF-1R.
4. *Verified Low Leakage Ducts in Conditioned Space (VLLDCS)*: Same data given on CF-1R; Details whether or not VLLDCS is required per CF-1R.
5. *Verified Low Leakage Air-handling Unit (VLLAHU) Credit*: Same data given on CF-1R; Details whether or not VLLAHU is required per CF-1R.
6. *Duct System Compliance Category*: Choose from Completely New, Complete Replacement, or Alteration.
   a. New System: For existing buildings in which an entirely new HVAC system installed for the first time.
   b. Complete Replacement System: For existing buildings where a completely new duct system is installed (cut in) or 75 percent or more new duct material, and up to 25 percent may consist of reused parts from the dwelling unit's existing duct system (e.g., registers, grilles, boots, air handler, coil, plenums, duct material).
   c. Alteration: For existing buildings where 40 feet of new or replacement space-conditioning system ducts are installed in unconditioned space or indirectly conditioned space.
   d. Replacement using Smoke Test: For existing buildings where a completely new duct system is installed (cut in) or 75 percent or more new duct material, and up to 25 percent may consist of reused parts from the dwelling unit's existing duct system (e.g., registers, grilles, boots, air handler, coil, plenums, duct material) and for which the target % leakage could not be met. All accessible leaks visible by smoke must be sealed.
   e. Alteration using Smoke Test: For existing buildings where 40 feet of new or replacement space-conditioning system ducts are installed in unconditioned space or indirectly conditioned space and for which the target % leakage could not be met. All accessible leaks visible by smoke must be sealed.

B. Duct Leakage Diagnostic Test - MCH-20e - Sealing All Accessible Leaks using Smoke Test

1. *Condenser Nominal Cooling Capacity (ton)*: Same data given on MCH-01.
2. *Heating Capacity (kBtu/h)*: Same data given on MCH-01; This field will be automatically-filled from the MCH-01 data.
3. *Conditioned Floor Area Served by this HVAC System (ft2)*: User must input CFA for the space. Should be consistent with the CF-1R input value.
4. *Duct Leakage Test Conditions*: This field will be automatically filled to be "TestFinal." This is the only allowable test condition for a replacement/alteration using Smoke Test.
5. *Duct Leakage Test Method*: This field will be automatically filled to be "TotalLeakage." This is the only allowable test method for Replacement/Alteration using Smoke Test.
6. *Leakage Factor*: Depending on answers to A3, A6, B4, and B5, 0.6, 0.12, or 0.15 will automatically populate.
7. *Air-Handler Unit Airflow (AHUAirflow) Determination Method*: User will select from the following options:
   a. Default Airflow Method: The Default Airflow Method may only be used for homes where the duct system is being tested before the conditioning and heating system is installed and the equipment specification is not known (See Section RA3.1.4.2.1 of the 2013 Reference Appendices).
   b. Cooling System Method: For systems with cooling, this selection must be made, and the nominal air handler airflow shall be 400 CFM per nominal ton of condensing unit cooling capacity as specified by the manufacturer or the heating only value, whichever is greater (See Section RA3.1.4.2.2 of the 2013 Reference Appendices).
   c. Heating System Method: For heating only systems the nominal air handler airflow shall be 21.7 CFM per kBtu/hr of rated heating output capacity.
   d. Measured Airflow Method: The system airflow can be used as the air handler airflow for the purpose of establishing duct leakage percentage (See Section RA3.1.4.2.3 of the 2013 Reference Appendices).
8. *Measured AHU Airflow (CFM)*: If "Measured Airflow Method" is selected in B7, user must input measured airflow.
9. *Calculated Target Allowable Duct Leakage Rate (cfm)*: This value will be automatically populated depending on values in earlier cells of this table.
10. *Actual duct leakage rate from leakage test measurement (cfm)*: User will input this value from actual measurements from leakage test.
11. *Compliance Statement*: If measured leakage (B10) is less than or equal to allowable duct leakage rate (B9), "system passes - system complies with Allowable Duct Leakage Rate Criterion" will automatically populate.
    If measured leakage is greater than allowable duct leakage rate, then the following will automatically populate:

For information and data collection only. Not valid until registered with a HERS provider

"System passes using smoke test of an altered HVAC system in an existing building

- No visible smoke exits the accessible portions of the duct system.
- Smoke is only emanating from air handler unit (AHU cabinet and non accessible portions of the duct system.

Note: Accessible is defined as having access thereto, but which first may require removal or opening of access panels, doors, or moving similar obstructions. If access to the ducts requires an object to be demolished or deconstructed, then sealing of those ducts is not required.

For information and data collection only. Not valid until registered with a HERS provider

DUCT LOCATION

CERTIFICATE OF INSTALLATION		CF2R-MCH-21-H
Duct Location		(Page 1 of 2)
Project Name:	Enforcement Agency:	Permit Number:
Dwelling Address:	City	Zip Code

A. General Information

Note: Submit one Installation Certificate for each duct system that is taking credit for duct location.

01	SC System Identification or Name	
02	SC System Location or Area Served	
03	Status < 12 ft ducts in conditioned space Performance Credit:	
04	Status Ducts Located In Conditioned Space Performance Credit:	
05	Status Less than mandatory Min R-Value Installed on Ducts claimed to be in Conditioned Space	

<<This table only shown if A.03 indicates the requirement>>

B. 12 Linear Feet or Less of Supply Duct Located Outside of Conditioned Space Performance Credit	
01	Less than 12 linear feet of supply duct outside of conditioned space. This includes the air handler and plenum.
By signing this certificate the installer certifies that the requirements of this section are met.	

<<This table only shown if A.03 indicates the requirement>>

C. Ducts Located In Conditioned Space Performance Credit	
01	Ducts are located within the conditioned space of the building
By signing this certificate the installer certifies that the requirements of this section are met.	

<<This table only shown if A.03 indicates the requirement>>

D. All Ducts Located Entirely in Directly Conditioned Space R-value Exception	
01	All Ducts are located within the directly conditioned space of the building
02	Seal all the supply registers and return grilles except for one large centrally located return grille or the air handler cabinet access panel.
03	Attach the fan flowmeter device to the duct system at the unsealed return grille or the air handler cabinet access panel.
04	Install a static pressure probe at the supply plenum.
05	Attach a blower door to an external doorway.
06	If the ducts are located in a conditioned basement, any door between the basement and the remaining conditioned space shall be open, and any basement doors or windows to outside must be closed during the test.
07	Adjust the blower door fan to provide positive 25 Pa (0.1 inches of water) pressure in the conditioned space with respect to outside.
08	Adjust the fan/flowmeter to maintain a zero pressure difference (plus or minus 0.5 Pa (.002 inches water)) between the ducts and the conditioned space, and adjust the blower door fan to maintain a positive 25 Pa (0.1 inches of water) pressure in the conditioned space with respect to outside. This step may require several iterations.
09	Record the flow through the flowmeter; this is the duct leakage flow to outside a 25 Pa (0.1 inches water). If the leakage flow is less than or equal to 25 CFM then the system passes.
By signing this certificate the installer certifies that the requirements of this section are met.	

For information and data collection only. Not valid until registered with a HERS provider

CERTIFICATE OF INSTALLATION		CF2R-MCH-21-H
Duct Location		(Page 2 of 2)
Project Name:	Enforcement Agency:	Permit Number:
Dwelling Address:	City	Zip Code

DOCUMENTATION AUTHOR'S DECLARATION STATEMENT	
1. I certify that this Certificate of Installation documentation is accurate and complete.	
Documentation Author Name:	Documentation Author Signature:
Documentation Author Company Name:	Date Signed:
Address:	CEA/HERS Certification Identification (If applicable):
City/State/Zip:	Phone:

RESPONSIBLE PERSON'S DECLARATION STATEMENT

I certify the following under penalty of perjury, under the laws of the State of California:

1. The information provided on this Certificate of Installation is true and correct.
2. I am eligible under Division 3 of the Business and Professions Code in the applicable classification to accept responsibility for the system design, construction, or installation of features, materials, components, or manufactured devices for the scope of work identified on this Certificate of Installation and attest to the declarations in this statement (responsible builder/installer), otherwise I am an authorized representative of the responsible builder/installer.
3. The constructed or installed features, materials, components or manufactured devices (the installation) identified on this Certificate of Installation conforms to all applicable codes and regulations, and the installation conforms to the requirements given on the plans and specifications approved by the enforcement agency.
4. I understand that a HERS rater will check the installation to verify compliance, and that if such checking identifies defects; I am required to take corrective action at my expense. I understand that Energy Commission and HERS Provider representatives will also perform quality assurance checking of installations, including those approved as part of a sample group but not checked by a HERS rater, and if those installations fail to meet the requirements of such quality assurance checking, the required corrective action and additional checking/testing of other installations in that HERS sample group will be performed at my expense.
5. I reviewed a copy of the Certificate of Compliance approved by the enforcement agency that identifies the specific requirements for the scope of construction or installation identified on this Certificate of Installation, and I have ensured that the requirements that apply to the construction or installation have been met.
6. I will ensure that a registered copy of this Certificate of Installation shall be posted, or made available with the building permit(s) issued for the building, and made available to the enforcement agency for all applicable inspections. I understand that a registered copy of this Certificate of Installation is required to be included with the documentation the builder provides to the building owner at occupancy.

Responsible Builder/Installer Name:	Responsible Builder/Installer Signature:	
Company Name: (Installing Subcontractor or General Contractor or Builder/Owner)	Position With Company (Title):	
Address:	CSLB License:	
City/State/Zip:	Phone	Date Signed:
Third Party Quality Control Program (TPQCP) Status:	Name of TPQCP (if applicable):	

For information and data collection only. Not valid until registered with a HERS provider

FAN EFFICACY (FAN WATT DRAW)

CERTIFICATE OF INSTALLATION		CF2R-MCH-22-H
Fan Efficacy (Fan Watt Draw)		(Page 1 of 2)
Project Name:	Enforcement Agency:	Permit Number:
Dwelling Address:	City	Zip Code

System Information

Each system requiring verification must use a separate form.

1.	System Name or Identification/Tag	
2.	System Location or Area Served	

Fan Watt Draw Measurement

When the Certificate of Compliance indicates Fan Watt Draw verification is required, the procedures must be performed as specified in RA3.3. This measure requires verification by a HERS rater.

3.	Fan Watt Draw Verification Method		
4.	Actual Tested Watt	**Watts**	
5.	Actual Tested Airflow from MECH-23	**CFM**	(auto filled)
6.	Required Fan Efficiency	**Watts/CFM**	
7.	Actual Fan Efficiency	**Watts/CFM**	
8.	Compliance Statement based on answer to #15		

Installer Certifies the Following

- All registers were fully open.
- System fan was set at maximum speed.
- If fresh air duct is part of the HVAC system it was not closed.
- Airflow and fan watt draw requires simultaneous measurements to calculate tested values.
- Multi-speed compressor systems or variable speed compressor systems verified air flow (cfm/ton) and fan efficacy (Watt/cfm) for system operation in cooling mode at the maximum compressor speed and the maximum air handler fan speed.
- Zoned air distribution systems met both the airflow (cfm/ton) and fan efficacy (Watt/cfm) criteria in every zonal control mode.
- Zoned air distribution systems that have multi-speed compressor systems or variable speed compressor systems shall only be required to verify air flow (cfm/ton) and fan efficacy (Watt/cfm) for system operation in cooling mode at maximum compressor capacity and maximum system fan speed and with all zones calling for conditioning.

9.	☐Yes	☐No	**Passes –** By checking the yes box the installer certifies that the requirements in the above box have been met.

For information and data collection only. Not valid until registered with a HERS provider

CERTIFICATE OF INSTALLATION		CF2R-MCH-22-H
Fan Efficacy (Fan Watt Draw)		(Page 2 of 2)
Project Name:	Enforcement Agency:	Permit Number:
Dwelling Address:	City	Zip Code

DOCUMENTATION AUTHOR'S DECLARATION STATEMENT

1. I certify that this Certificate of Installation documentation is accurate and complete.

Documentation Author Name:	Documentation Author Signature:
Documentation Author Company Name:	Date Signed:
Address:	CEA/HERS Certification Identification (If applicable):
City/State/Zip:	Phone:

RESPONSIBLE PERSON'S DECLARATION STATEMENT

I certify the following under penalty of perjury, under the laws of the State of California:

1. The information provided on this Certificate of Installation is true and correct.
2. I am eligible under Division 3 of the Business and Professions Code in the applicable classification to accept responsibility for the system design, construction, or installation of features, materials, components, or manufactured devices for the scope of work identified on this Certificate of Installation and attest to the declarations in this statement (responsible builder/installer), otherwise I am an authorized representative of the responsible builder/installer.
3. The constructed or installed features, materials, components or manufactured devices (the installation) identified on this Certificate of Installation conforms to all applicable codes and regulations, and the installation conforms to the requirements given on the plans and specifications approved by the enforcement agency.
4. I understand that a HERS rater will check the installation to verify compliance, and that if such checking identifies defects; I am required to take corrective action at my expense. I understand that Energy Commission and HERS Provider representatives will also perform quality assurance checking of installations, including those approved as part of a sample group but not checked by a HERS rater, and if those installations fail to meet the requirements of such quality assurance checking, the required corrective action and additional checking/testing of other installations in that HERS sample group will be performed at my expense.
5. I reviewed a copy of the Certificate of Compliance approved by the enforcement agency that identifies the specific requirements for the scope of construction or installation identified on this Certificate of Installation, and I have ensured that the requirements that apply to the construction or installation have been met.
6. I will ensure that a registered copy of this Certificate of Installation shall be posted, or made available with the building permit(s) issued for the building, and made available to the enforcement agency for all applicable inspections. I understand that a registered copy of this Certificate of Installation is required to be included with the documentation the builder provides to the building owner at occupancy.

Responsible Builder/Installer Name:	Responsible Builder/Installer Signature:	
Company Name: (Installing Subcontractor or General Contractor or Builder/Owner)	Position With Company (Title):	
Address:	CSLB License:	
City/State/Zip:	Phone	Date Signed:
Third Party Quality Control Program (TPQCP) Status:	Name of TPQCP (if applicable):	

For information and data collection only. Not valid until registered with a HERS provider.

User Instructions for Completing the MECH 22:

System Information

1. System Name or Identification/Tag – Imported from the MECH-01 or entered manually; provide an identification name or tag name that uniquely identifies the duct system. If there is a mechanical plan for the system, the tag name may be given on the plans.
2. System Location or Area Served - Imported from the MECH-01 or entered manually; provide a brief description of the area served by the duct system (e.g. upstairs; downstairs).

Fan Watt Draw Measurement

3. Select or Enter Fan Watt verification method from the following:
   A. Portable Watt Meter Measurement according to the procedures in RA3.3.3.2.1
   B. Utility Revenue Meter Measurement according to the procedures in RA3.3.3.2.2
   C. Digital Utility Revenue Meter Measurement according to the procedures in RA3.3.3.3.
4. Enter the Actual Tested Watts using the method picked in #6.
5. Actual Tested Airflow (CFM) from the MECH 23(Auto filled from MECH 23).
6. Required Fan Efficiency – Imported from the CF-1R or manually entered (0.58 Watts/CFM or lower)
7. Actual Fan Efficiency = Actual Tested Watts (from #7 above) / Actual Tested Airflow (from #8 above) – Calculated value auto filled into form.
8. Compliance Statement auto filled:
   A. If #10 is less than or equal to #9 = **Pass –** The system's fan watt draw meets the requirements of the design
   B. If #10 is greater than #9 = **Fail –** The system's fan watt draw does not meets the requirements of the design

Installer Certifies the Following for Fan Watt Draw

9. Compliance Statement auto filled based on the yes/no answer:
   A. If the yes box is checked = **Passes –** By checking the yes box the installer certifies that the requirements in the above box have been met.
   B. If the no box is checked = **Fails –** By checking the no box the installer certifies that the requirements in the above box have not been met.

For information and data collection
Not valid until registered with a
HERS provider

Figure RA3.3-1.

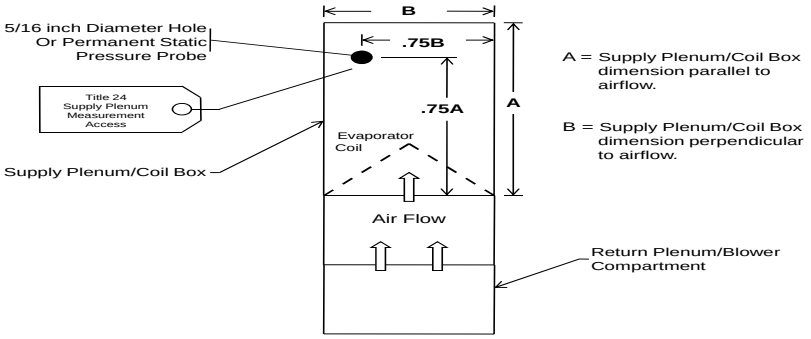

SPACE CONDITIONING SYSTEM AIRFLOW RATE

CERTIFICATE OF INSTALLATION		CF2R-MCH-23-H
Space Conditioning System Airflow Rate		(Page 1 of 3)
Project Name:	Enforcement Agency:	Permit Number:
Dwelling Address:	City	Zip Code

A. Ducted Cooling System Information		
01	System Identification or Name	
02	System Location or Area Served	
03	Nominal Cooling Capacity (tons) of Condenser	
04	System Installation Type	
05	Cooling System Zonal Control Type	
06	Bypass Duct Status	
07	Required Minimum System Airflow Rate (cfm)	
08	Allowable Minimum Zonal Airflow Rate (cfm)	
09	Date of System Airflow Rate Measurement	
10	Type of System Airflow Rate Compliance	

B. Hole for the placement of a Static Pressure Probe (HSPP), and Permanently installed Static Pressure Probe (PSPP) in the supply plenum. *Procedures for installing HSPP or PSPP are specified in RA3.3.1.1.*		
01	Method used to demonstrate compliance with the HSPP/PSPP requirement	

C. Airflow Rate Measurement Apparatus and Procedure Information *Instrument Specifications ae given in RA3.3.1.1, and system airflow rate measurement apparatus information is given in RA3.3.2.*		
01	Airflow Rate Measurement Type used for this airflow rate verification.	
03	Manufacturer of Airflow Measurement Apparatus	
04	Model number of Airflow Measurement Apparatus	
05	Certification Status of the Airflow Measurement Apparatus Accuracy	
06	determine compliance method for this document; display applicable tables below; (this row not visible to user)	

For information and data collection only. Not valid until registered with a HERS provider

MCH-23a Forced Air System Airflow Rate Measurement - Single Zone Systems or Zonally Controlled Systems with All Zones Calling

D. Forced Air System Airflow Rate Measurement
The procedures for System Airflow Rate Verification are specified in Reference Residential Appendix RA3.3.

01	Target System Airflow Rate (cfm)	<< calculated field: if A04 = New or Replacement; then display numeric value = A03*350; elseif A04 = Alteration; then display numeric value = A03*300>>
02	Actual System Airflow Rate Measurement (cfm)	<<user input numeric value: xxxx>>
03	<<Compliance Statement: if D02≥D01, the display text "system airflow rate complies", else display text "system does not comply with minimum airflow rate requirement">>	

E. Additional Requirements
The responsible persons signature on this document indicates compliance with the following requirements:

01	Air filters that meet the applicable requirements of Standards Section 150.0(m)12 or 150.0(m)13 were properly installed in the system during system air flow rate measurement identified on this Certificate of Installation.
02	The airflow rate measurement apparatus used to perform the airflow rate measurement identified on this Certificate of Installation was calibrated in accordance with the apparatus manufacturer's specifications and conforms to the instrumentation specifications given in RA3.3.1.

For information and data collection only. Not valid until registered with a HERS provider

CERTIFICATE OF INSTALLATION		CF2R-MCH-23-H
Space Conditioning System Airflow Rate		(Page 3 of 3)
Project Name:	Enforcement Agency:	Permit Number:
Dwelling Address:	City	Zip Code

DOCUMENTATION AUTHOR'S DECLARATION STATEMENT

1. I certify that this Certificate of Installation documentation is accurate and complete.

Documentation Author Name:	Documentation Author Signature:
Documentation Author Company Name:	Date Signed:
Address:	CEA/HERS Certification Identification (If applicable):
City/State/Zip:	Phone:

RESPONSIBLE PERSON'S DECLARATION STATEMENT

I certify the following under penalty of perjury, under the laws of the State of California:

1. The information provided on this Certificate of Installation is true and correct.
2. I am eligible under Division 3 of the Business and Professions Code in the applicable classification to accept responsibility for the system design, construction, or installation of features, materials, components, or manufactured devices for the scope of work identified on this Certificate of Installation and attest to the declarations in this statement (responsible builder/installer), otherwise I am an authorized representative of the responsible builder/installer.
3. The constructed or installed features, materials, components or manufactured devices (the installation) identified on this Certificate of Installation conforms to all applicable codes and regulations, and the installation conforms to the requirements given on the plans and specifications approved by the enforcement agency.
4. I understand that a HERS rater will check the installation to verify compliance, and that if such checking identifies defects; I am required to take corrective action at my expense. I understand that Energy Commission and HERS Provider representatives will also perform quality assurance checking of installations, including those approved as part of a sample group but not checked by a HERS rater, and if those installations fail to meet the requirements of such quality assurance checking, the required corrective action and additional checking/testing of other installations in that HERS sample group will be performed at my expense.
5. I reviewed a copy of the Certificate of Compliance approved by the enforcement agency that identifies the specific requirements for the scope of construction or installation identified on this Certificate of Installation, and I have ensured that the requirements that apply to the construction or installation have been met.
6. I will ensure that a registered copy of this Certificate of Installation shall be posted, or made available with the building permit(s) issued for the building, and made available to the enforcement agency for all applicable inspections. I understand that a registered copy of this Certificate of Installation is required to be included with the documentation the builder provides to the building owner at occupancy.

Responsible Builder/Installer Name:	Responsible Builder/Installer Signature:	
Company Name: (Installing Subcontractor or General Contractor or Builder/Owner)	Position With Company (Title):	
Address:	CSLB License:	
City/State/Zip:	Phone	Date Signed:
Third Party Quality Control Program (TPQCP) Status:	Name of TPQCP (if applicable):	

For information and data collection only. Not valid until registered with a HERS provider

CERTIFICATE OF INSTALLATION		CF2R-MCH-25-H
Refrigerant Charge Verification		(Page 1 of 4)
Project Name:	Enforcement Agency:	Permit Number:
Dwelling Address:	City	Zip Code

A. System Information

Each system requiring refrigerant charge verification will be documented on a separate certificate.

01	System Identification or Name	
02	System Location or Area Served	
03	Condenser (or package unit) make or brand	
04	Condenser (or package unit) model number	
05	Nominal Cooling Capacity (tons) of Condenser	
06	Condenser (or package unit) serial number	
07	Refrigerant Type	
08	Other Refrigerant Type (if applicable)	
09	Project Type	
10	Charge Indicator Display (CID) Status (Note: Even systems with a CID must have refrigerant charge verified by installer)	
11	Is the system of a type that the minimum airflow can be verified using an approved measurement procedure (RA3.3 or RA3.2.2.7)?	
12	Is the system of a type that approved refrigerant charge verification procedures can be used to verify compliance with the refrigerant charge verification requirements when temperatures are ≥ 55°F (RA3.2.2, or RA1)?	
13	Date of Refrigerant Charge Verification for this system	
14	Refrigerant charge verification method used.	
15	Person who performed the Refrigerant Charge Verification reported on this Certificate of Installation:	
16	HERS Verification Compliance Requirement Status	

For information and data collection only. Not valid until registered with a HERS provider

Standard Charge Verification Procedure - CF2R-MCH-25a - Superheat Method

B. Metering Device Verification

Superheat Method can only be used on systems that do not have a variable metering device.

01	Refrigerant metering device	
02	Superheat Method applicability status	

CERTIFICATE OF INSTALLATION		CF2R-MCH-25-H
Refrigerant Charge Verification		(Page 2 of 4)
Project Name:	Enforcement Agency:	Permit Number:
Dwelling Address:	City	Zip Code

C. Instrument Calibration
Procedures for instrument calibration are given in Reference Residential Appendix RA3.2.2 and RA3.2.2.2

01	Date of Digital Refrigerant Gauge Calibration	
02	Date of Digital Thermocouple Calibration	
03	Digital Refrigerant Gauge Calibration Status	
04	Digital Thermocouple Calibration Status	

D. Measurement Access Hole (MAH) Verification
Procedures for installing MAH are specified in Reference Residential Appendix RA3.2.2.3

01	Method used to demonstrate compliance with the Measurement Access Hole (MAH) requirement	

E. Minimum System Airflow Rate Verification
Procedures for verifying minimum system airflow are specified in Reference Residential Appendix RA3.2.2.7.

01	Minimum Required System Airflow Rate (cfm)	
02	System Airflow Rate Verification Status	

F. Data Collection
Procedures for determining Refrigerant Charge using the Standard Charge Verification Procedure are given in Reference Residential Appendix RA3.2.2 and RA3.2.2.2

01	Lowest return air dry bulb temperature that occurred during the refrigerant charge verification procedure (degreeF)	
02	Measured Condenser air entering dry-bulb temperature ($T_{condenser, db}$) (degreeF)	
03	Outdoor Temperature Qualification Status	
04	Measured Return (evaporator entering) air dry-bulb temperature ($T_{return, db}$) (degreeF)	
05	Measured Return (evaporator entering) air wet-bulb temperature ($T_{return, wb}$) (degreeF)	
06	Measured Suction line temperature ($T_{suction}$) (degreeF)	
07	Measured Suction line pressure ($P_{suction}$ - psig)	
08	Evaporator saturation temperature ($T_{evaporator, sat}$) from digital gauge or P-T Table using Line F07 (degreeF)	
09	Measured Superheat (Line F06 – Line F08) (degreeF)	
10	Target Superheat (from Table RA3.2-2, using F02 and F05) (degreeF)	
11	Compliance Statement:	

For information and data collection only. Not valid until registered with a HERS provider

CERTIFICATE OF INSTALLATION		CF2R-MCH-25-H
Refrigerant Charge Verification		(Page 3 of 4)
Project Name:	Enforcement Agency:	Permit Number:
Dwelling Address:	City	Zip Code

Verification of Charge Indicator Display - CF2R-MCH-25d - CID

<<If A10 = "This system has a factory installed CID"; or "This system has a field installed CID", then display this section>>

G. Charge Indicator Display *Procedures for the Charge Indicator Display Verification are detailed in RA3.4.2*		
01	CID Manufacturer Name/Make	
02	CID Model Number	
03	The display module is mounted adjacent to the system thermostat	
04	The manufacturer has certified to the Energy Commission that the CID model meets the requirements of Reference Joint Appendix JA6 (Make and model found on CEC list of approved CID devices)	
05	The system has operated for at least 15 minutes and the CID reports that the system is operating within acceptable parameters.	

<<If A10 = "This system has a factory installed CID"; or "This system has a field installed CID", then display this section>>

H. CHARGE INDICATOR DISPLAY – ADDITIONAL REQUIREMENTS	
THE RESPONSIBLE PERSONS SIGNATURE ON THIS DOCUMENT INDICATES THE INSTALLATION COMPLIES WITH THE FOLLOWING REQUIREMENTS:	
01	Charge indicator display devices shall either be factory installed by the space-conditioning system manufacturer, or field installed according to the space-conditioning system manufacturer's requirements and the CID manufacturer's specifications.
02	The installer shall ensure that a copy of the CID manufacturer's user instructions documentation has been made available to the building owner.

For information and data collection only. Not valid until registered with a HERS provider

CERTIFICATE OF INSTALLATION		CF2R-MCH-25-H
Refrigerant Charge Verification		(Page 4 of 4)
Project Name:	Enforcement Agency:	Permit Number:
Dwelling Address:	City	Zip Code

DOCUMENTATION AUTHOR'S DECLARATION STATEMENT	
1. I certify that this Certificate of Installation documentation is accurate and complete.	
Documentation Author Name:	Documentation Author Signature:
Documentation Author Company Name:	Date Signed:
Address:	CEA/HERS Certification Identification (If applicable):
City/State/Zip:	Phone:

RESPONSIBLE PERSON'S DECLARATION STATEMENT

I certify the following under penalty of perjury, under the laws of the State of California:

1. The information provided on this Certificate of Installation is true and correct.
2. I am eligible under Division 3 of the Business and Professions Code in the applicable classification to accept responsibility for the system design, construction, or installation of features, materials, components, or manufactured devices for the scope of work identified on this Certificate of Installation and attest to the declarations in this statement (responsible builder/installer), otherwise I am an authorized representative of the responsible builder/installer.
3. The constructed or installed features, materials, components or manufactured devices (the installation) identified on this Certificate of Installation conforms to all applicable codes and regulations, and the installation conforms to the requirements given on the plans and specifications approved by the enforcement agency.
4. I understand that a HERS rater will check the installation to verify compliance, and that if such checking identifies defects; I am required to take corrective action at my expense. I understand that Energy Commission and HERS Provider representatives will also perform quality assurance checking of installations, including those approved as part of a sample group but not checked by a HERS rater, and if those installations fail to meet the requirements of such quality assurance checking, the required corrective action and additional checking/testing of other installations in that HERS sample group will be performed at my expense.
5. I reviewed a copy of the Certificate of Compliance approved by the enforcement agency that identifies the specific requirements for the scope of construction or installation identified on this Certificate of Installation, and I have ensured that the requirements that apply to the construction or installation have been met.
6. I will ensure that a registered copy of this Certificate of Installation shall be posted, or made available with the building permit(s) issued for the building, and made available to the enforcement agency for all applicable inspections. I understand that a registered copy of this Certificate of Installation is required to be included with the documentation the builder provides to the building owner at occupancy.

Responsible Builder/Installer Name:	Responsible Builder/Installer Signature:	
Company Name: (Installing Subcontractor or General Contractor or Builder/Owner)	Position With Company (Title):	
Address:	CSLB License:	
City/State/Zip:	Phone	Date Signed:
Third Party Quality Control Program (TPQCP) Status:	Name of TPQCP (if applicable):	

For information and data collection only. Not valid until registered with a HERS provider

Instructions MCH-25a:

Section A. System Information

1. This information is automatically pulled from the Certificate of Installation (MCH-01).
2. This information is automatically pulled from the Certificate of Installation (MCH-01)
3. This information is automatically pulled from the Certificate of Installation (MCH-01).
4. This information is automatically pulled from the Certificate of Installation (MCH-01)
5. This information is automatically pulled from the Certificate of Installation (MCH-01).
6. This information is automatically pulled from the Certificate of Installation (MCH-01)
7. Choose the type of refrigerant used by the system being verified.
8. If "Other" is chosen in Row A07, then indicate the type of refrigerant being used. If R-22 or R-410A is being used (regardless of trade name, Puron, Genetro, etc.) it should be indicated in Row A07. This row is only for refrigerants other than R-22 and R-410a. Documentation of refrigerant may be requested.
9. Indicate whether the HVAC system is Completely New, Replacement or an Alteration. These are defined in detail the Residential Compliance Manual.
10. Select the appropriate choice regarding whether this system has a Charge Indicator Display (CID). Qualifying CID's may exempt a system from HERS refrigerant charge verification. CID's are described in Joint Appendix JA6.1. Qualfying CID's must appear on a list of approved devices kept by the Commission.
11. Most ducted split systems and package systems are of the type that minimum airflow can be verified using an approved measurement procedure. Examples of systems that do not meet this description are ductless systems. Selecting "No" here may subject the project to additional scrutiny by enforcement personnel.
12. Most ducted split systems and package systems are of the type that approved refrigerant charge verification procedures detailed in Residential Appendix RA3.2.2 or RA1 can be used (i.e., Standard Charge Verification or Winter Setup Verification procedures). Examples of systems that may not meet this description are "mini splits" or variable refrigerant flow systems that may only be charged using weigh-in procedures. Selecting "No" here may subject the project to additional scrutiny.
13. Specify the date the refrigerant charge verification was performed.
14. Select the refrigerant charge verification method used from the choices provided:
    - Superheat (outdoor temperature must be ≥ 55 degF); This verification method can only be used when the outdoor temperature is at or above 55 degF. It is only used on systems with fixed orifice refrigerant metering devices (non-variable metering devices). This method is detailed in Reference Appendix RA3.2.2.6.1. Systems verified using this method may be eligible for HERS verification compliance using sampling. Choosing this option will generate a CF2R-MCH-25a.
    - Subcooling (outdoor temperature must be ≥ 55 degF); This verification method can only be used when the outdoor temperature is at or above 55 degF. It is only used on systems with variable metering devices (TXV or EXV). This method is detailed in Reference Appendix RA3.2.2.6.2. Systems verified using this method may be eligible for HERS verification compliance using sampling. Choosing this option will generate a CF2R-MCH-25b.

For information and data collection only. Not valid until registered with a HERS provider

- Weigh-in; This verification method can be used at any outdoor temperature allowed by the equipment manufacturer. This method is detailed in Reference Appendix RA3.2.3. Systems verified using this method are NOT eligible for HERS verification compliance using Group Sampling. Choosing this option will generate a CF2R-MCH-25c.
- Winter Setup (applicable when outdoor temperature is < 55 degF); The Winter Setup verification method is a special version of the Subcooling method. It can be used when the outdoor temperature is between 37 and 55 degF. It can only be used on equipment where the manufacturer has specifically approved it for the equipment being tested. The Winter Setup procedure is details in Residential Appendix RA1.2. Choosing this option will generate a CF2R-MCH-25e.
- New Package Unit Factory Charge; Choose this option when a new package unit is being installed that has an AHRI rating. This helps ensure that the unit was properly charged at the factory. HERS verification of refrigerant charge may not be required in this case. Choosing this option will generate a CF2R-MCH-25f.

15. Identify who will be performing the verification that is documented on this Certificate of Installation, select from the two options. Note that HERS verification compliance by Group Sampling requires that the installer perform their own refrigerant charge verification as part of the installation of the equipment prior to the system being put into a sample group for possible selection by a HERS rater for verification. If Group Sampling is not intended, the HERS Rater may perform the refrigerant charge verification on behalf of the Installing Contractor (applies to any method but Weigh-In) and the Rater will enter same results on both the CF2R and CF3R.
16. The Group Sampling status is automatically displayed based on the input results of Row A14 and Row A15. Group Sampling procedures are detailed Residential Appendix RA2.3.

Section B. Metering Device Verification

1. Select the correct metering device used on the system being verified. This will check against the refrigerant charge verification method selected in Row A14. An error message will appear in Row B02 iif the wrong verification method may has been selected. Superheat verification can only be used on systems with fixed orifice and Subcool verification can only be used on systems with variable metering devices (TXV or EXV).
2. An error message in here indicates that the wrong verification method may have been selected. Superheat verification can only be used on systems with fixed orifice and Subcool verification can only be used on systems with variable metering devices (TXV or EXV).

Section C. Instrument Calibration

1. Enter the date of most recent Digital Refrigerant Gauge Calibration Field Check. Analog gauges are not allowed for verification purposes under the 2013 Standards. Specification for pressure gauges is found in Residential Appendix RA3.2.2.2.3. Procedures for the field check procedure are detailed in RA3.2.2.4.2. Calibration field check must happen at least once every 30 days.
2. Enter the date of the most recent Digital Thermocouple Calibration. Specifications for thermocouples and temperature sensors can be found in Residential Appendix RA3.2.2.2.2. Procedures for calibration are detailed in RA3.2.2.4.1. Calibration must happen at least once every 30 days.

For information and data collection only. Not valid until registered with a HERS provider

3. Digital Refrigerant Gauge Calibration status will appear automatically. If the date entered in Row C01 is more than 30 days prior to date of verification this row will indicate that calibration is required and you will not be allowed to continue filling out this document.
4. Digital Thermocouple Calibration status will appear automatically. If the date entered in Row C02 is more than 30 days prior to date of verification this row will indicate that calibration is required and you will not be allowed to continue filling out this document.

Section D. Measurement Access Hole (MAH) Verification

1. Indicate the method used to demonstrate compliance with the MAH requirement by selecting the appropriate method from the drop down list. Procedures for installing MAH's are detailed in RA3.2.2.3. Selecting that the MAH cannot be installed consistent with Figure 3.2-1 may result in additional scrutiny by enforcement personnel.

Section E. Minimum System Airflow Rate Verification

1. This information is automatically calculated based on the information given in line A09. This is the target minimum system airflow required for the system being verified.
2. This information is automatically calculated based on the MCH-23 which documents the measured airflow of the system being verified. If the measured airflow is not adequate it will not comply with the airflow requirements and refrigerant charge verification cannot be performed.

Section F. Superheat Charge Verification Method – Data Collection

1. Measure and record the lowest return air dry-bulb temperature that occurred during the refrigerant charge procedure in degrees F. This temperature must remain above 70 degF during the verification procedure. This requirement is detailed in Residential Appendix RA3.2.2.5.
2. Measure and record the condenser air dry-bulb temperature ($T_{condenser}$) in degrees F. This value is used to determine the target superheat from table RA3.2-2. This value must be at least 55 degF and no more than 115 degF to use the Superheat Charge Verification Method.
3. If a value less than 55 degF or greater than 115 degF is entered in Row F02 the Superheat Method cannot be used.
4. Measure and record the return air dry-bulb temperature ($T_{return,db}$) in degrees F. This measurement is taken at the MAH (or alternate location specified in Row F01. This procedure is detailed in RA3.2.2.5.
5. Measure and record the return air wet-bulb temperature ($T_{return,wb}$) in degrees F. This measurement is taken at the MAH (or alternate location specified in Row F01. This procedure is detailed in RA3.2.2.5. This value is used to determine the target superheat from table RA3.2-2.
6. Measure and record the suction line temperature ($T_{suction}$) in degrees F. This procedure is detailed in RA3.2.2.5. This value is used to calculate the measured superheat.
7. Measure and record the suction line pressure ($P_{suction}$) in psig. This procedure is detailed in RA3.2.2.5. This value is used to determine the evaporator saturation temperature ($T_{evaporator,sat}$) from a pressure temperature chart for the appropriate refrigerant (can be internal to a digital gauge), which is entered into Row F08.

For information and data collection only. Not valid until registered with a HERS provider

8. Enter the evaporator saturation temperature ($T_{evaporator,sat}$) from the digital gauge or a separate pressure-temperature chart that corresponds to the suction line pressure entered in Row F07, in degrees F.
9. Measured superheat is automatically calculated as the difference between the suction line temperature (Row F06) and the evaporator saturation temperature (Row F08)
10. Enter target superheat from Table RA3.2-2. This table requires values for the condenser air dry bulb temperature (Row F02) and the return air wet bulb temperature (Row F05)
11. System passes superheat method when Row F10 is within plus or minus 5 degrees of Row F09.

Section G. Verification of Charge Indicator Display

1. Enter the manufacturer name or make of the approved Charge Indicator Display. Must match name shown on the list of approved devices kept by the Commission.
2. Enter the manufacturer model number of the approved Charge Indicator Display. Must match name shown on the list of approved devices kept by the Commission.
3. The installer must confirm that the CID display module is mounted adjacent to thermostat that controls the system being verified. This requirement is detailed in Residential Appendix RA3.4.2.
4. The installer must confirm that the installed CID is approved and appears the list of approved devices kept by the Commission. This requirement is detailed in Residential Appendix RA3.4.2.
5. The installer must confirm that the system has operated for at least 15 minutes and that they system is operating within acceptable parameters as specified by the CID and equipment manufacturers. This requirement is detailed in Residential Appendix RA3.4.2.

For information and data collection only. Not valid until registered with a HERS provider.

REFRIGERANT CHARGE VERIFICATION

CERTIFICATE OF INSTALLATION		CF2R-MCH-25-H
Refrigerant Charge Verification		(Page 1 of 4)
Project Name:	Enforcement Agency:	Permit Number:
Dwelling Address:	City	Zip Code

A. System Information

Each system requiring refrigerant charge verification will be documented on a separate certificate.

01	System Identification or Name	
02	System Location or Area Served	
03	Condenser (or package unit) make or brand	
04	Condenser (or package unit) model number	
05	Nominal Cooling Capacity (tons) of Condenser	
06	Condenser (or package unit) serial number	
07	Refrigerant Type	
08	Other Refrigerant Type (if applicable)	
09	Project Type	
10	Charge Indicator Display (CID) Status (Note: Even systems with a CID must have refrigerant charge verified by installer)	
11	Is the system of a type that the minimum airflow can be verified using an approved measurement procedure (RA3.3 or RA3.2.2.7)?	
12	Is the system of a type that approved refrigerant charge verification procedures can be used to verify compliance with the refrigerant charge verification requirements when temperatures are ≥ 55°F (RA3.2.2, or RA1)?	
13	Date of Refrigerant Charge Verification for this system	
14	Refrigerant charge verification method used.	
15	Person who performed the Refrigerant Charge Verification reported on this Certificate of Installation:	
16	HERS Verification Compliance Requirement Status	

For information and data collection only. Not valid until registered with a HERS provider

Standard Charge Verification Procedure - MCH25b - Subcooling Method

B. Metering Device Verification

Subcooling Method can only be used on systems that have a variable metering device.

01	Refrigerant metering device	
02	Subcooling Method applicability status	

CERTIFICATE OF INSTALLATION		CF2R-MCH-25-H
Refrigerant Charge Verification		(Page 2 of 4)
Project Name:	Enforcement Agency:	Permit Number:
Dwelling Address:	City	Zip Code

C. Instrument Calibration

Procedures for instrument calibration are given in Reference Residential Appendix RA3.2.2 and RA3.2.2.2

01	Date of Digital Refrigerant Gauge Calibration	
02	Date of Digital Thermocouple Calibration	
03	Digital Refrigerant Gauge Calibration Status	
04	Digital Thermocouple Calibration Status	

D. Measurement Access Hole (MAH) Verification

Procedures for installing MAH are specified in Reference Residential Appendix RA3.2.2.3

01	Method used to demonstrate compliance with the Measurement Access Hole (MAH) requirement	

E. Minimum System Airflow Rate Verification

Procedures for verifying minimum system airflow are specified in Reference Residential Appendix RA3.2.2.7.

01	Minimum Required System Airflow Rate (cfm)	
02	System Airflow Rate Verification Status	

F. Data Collection

Procedures for determining Refrigerant Charge using the Standard Charge Verification Procedure are given in Reference Residential Appendix RA3.2.2.

01	Lowest return air dry bulb temperature that occurred during the refrigerant charge verification procedure (degreeF)	
02	Measured Condenser air entering dry-bulb temperature ($T_{condenser, db}$)	
03	Outdoor Temperature Qualification Status	
04	Measured Liquid Line Temperature (T_{liquid}) (degreeF)	
05	Measured Liquid Line Pressure (P_{liquid}) (psig)	
06	Condenser saturation temperature ($T_{condensor, sat}$) from digital gauge or P-T Table using Line F05 (degreeF)	
07	Measured Subcooling (Line F06 – Line F04) (degreeF)	
08	Target Subcooling from Manufacturer (degreeF)	

Compliance Statement:

For information and data collection only. Not valid until registered with a HERS provider

CERTIFICATE OF INSTALLATION		CF2R-MCH-25-H
Refrigerant Charge Verification		(Page 3 of 4)
Project Name:	Enforcement Agency:	Permit Number:
Dwelling Address:	City	Zip Code

G. Metering Device Verification		
Procedures for the verification of proper metering device operation are specified in RA3.2.2.6.2		
01	Measured Suction line temperature ($T_{suction}$) (degreeF)	
02	Measured Suction line pressure ($P_{suction}$) (psig)	
03	Evaporator saturation temperature ($T_{evaporator, sat}$) from digital gauge or P-T Table using line G02 (degreeF)	
04	Measured Superheat (Line G01 – Line G03) (degreeF)	
05	Measured Superheat (Line G04) is between 4 and 25 deg F (inclusive)	
06	Measured Superheat (Line G04) is within manufacturer's specifications, if known.	
Compliance Statement:		

Verification of Charge Indicator Display - CF2R-MCH-25d - CID

<<If A10 = "This system has a factory installed CID"; or "This system has a field installed CID", then display this section>>

H. Charge Indicator Display		
Procedures for the Charge Indicator Display Verification are detailed in RA3.4.2		
01	CID Manufacturer Name/Make	
02	CID Model Number	
03	The display module is mounted adjacent to the system thermostat	
04	The manufacturer has certified to the Energy Commission that the CID model meets the requirements of Reference Joint Appendix JA6 (Make and model found on CEC list of approved CID devices)	
05	The system has operated for at least 15 minutes and the CID reports that the system is operating within acceptable parameters.	

I. Charge Indicator Display – Additional Requirements	
The responsible persons signature on this document indicates the installation complies with the following requirements:	
01	Charge indicator display devices is factory installed by the space-conditioning system manufacturer, or field installed according to the space-conditioning system manufacturer's requirements and the CID manufacturer's specifications.
02	The installer shall ensure that a copy of the CID manufacturer's user instructions documentation has been made available to the building owner.

For information and data collection only. Not valid until registered with a HERS provider

CERTIFICATE OF INSTALLATION		CF2R-MCH-25-H
Refrigerant Charge Verification		(Page 4 of 4)
Project Name:	Enforcement Agency:	Permit Number:
Dwelling Address:	City	Zip Code

DOCUMENTATION AUTHOR'S DECLARATION STATEMENT	
1. I certify that this Certificate of Installation documentation is accurate and complete.	
Documentation Author Name:	Documentation Author Signature:
Documentation Author Company Name:	Date Signed:
Address:	CEA/HERS Certification Identification (If applicable):
City/State/Zip:	Phone:

RESPONSIBLE PERSON'S DECLARATION STATEMENT

I certify the following under penalty of perjury, under the laws of the State of California:

1. The information provided on this Certificate of Installation is true and correct.
2. I am eligible under Division 3 of the Business and Professions Code in the applicable classification to accept responsibility for the system design, construction, or installation of features, materials, components, or manufactured devices for the scope of work identified on this Certificate of Installation and attest to the declarations in this statement (responsible builder/installer), otherwise I am an authorized representative of the responsible builder/installer.
3. The constructed or installed features, materials, components or manufactured devices (the installation) identified on this Certificate of Installation conforms to all applicable codes and regulations, and the installation conforms to the requirements given on the plans and specifications approved by the enforcement agency.
4. I understand that a HERS rater will check the installation to verify compliance, and that if such checking identifies defects; I am required to take corrective action at my expense. I understand that Energy Commission and HERS Provider representatives will also perform quality assurance checking of installations, including those approved as part of a sample group but not checked by a HERS rater, and if those installations fail to meet the requirements of such quality assurance checking, the required corrective action and additional checking/testing of other installations in that HERS sample group will be performed at my expense.
5. I reviewed a copy of the Certificate of Compliance approved by the enforcement agency that identifies the specific requirements for the scope of construction or installation identified on this Certificate of Installation, and I have ensured that the requirements that apply to the construction or installation have been met.
6. I will ensure that a registered copy of this Certificate of Installation shall be posted, or made available with the building permit(s) issued for the building, and made available to the enforcement agency for all applicable inspections. I understand that a registered copy of this Certificate of Installation is required to be included with the documentation the builder provides to the building owner at occupancy.

Responsible Builder/Installer Name:	Responsible Builder/Installer Signature:	
Company Name: (Installing Subcontractor or General Contractor or Builder/Owner)	Position With Company (Title):	
Address:	CSLB License:	
City/State/Zip:	Phone	Date Signed:
Third Party Quality Control Program (TPQCP) Status:	Name of TPQCP (if applicable):	

For information and data collection only. Not valid until registered with a HERS provider

Instructions MCH-25b:

Section A. System Information

1. This information is automatically pulled from the Certificate of Installation (MCH-01).
2. This information is automatically pulled from the Certificate of Installation (MCH-01)
3. This information is automatically pulled from the Certificate of Installation (MCH-01).
4. This information is automatically pulled from the Certificate of Installation (MCH-01)
5. This information is automatically pulled from the Certificate of Installation (MCH-01).
6. This information is automatically pulled from the Certificate of Installation (MCH-01)
7. Choose the type of refrigerant used by the system being verified.
8. If "Other" is chosen in Row A07, then indicate the type of refrigerant being used. If R-22 or R-410A is being used (regardless of trade name, Puron, Genetron, etc.) it should be indicated in Row A07. This row is only for refrigerants other than R-22 and R-410a. Documentation of refrigerant may be requested.
9. Indicate whether the HVAC system is Completely New, Replacement or an Alteration. These are defined in detail the Residential Compliance Manual.
10. Select the appropriate choice regarding whether this system has a Charge Indicator Display (CID). Qualifying CID's may exempt a system from HERS refrigerant charge verification. CID's are described in Joint Appendix JA6.1. Qualfying CID's must appear on a list of approved devices kept by the Commission.
11. Most ducted split systems and package systems are of the type that minimum airflow can be verified using an approved measurement procedure. Examples of systems that do not meet this description are ductless systems. Selecting "No" here may subject the project to additional scrutiny by enforcement personnel.
12. Most ducted split systems and package systems are of the type that approved refrigerant charge verification procedures detailed in Residential Appendix RA3.2.2 or RA1 can be used (i.e., Standard Charge Verification or Winter Setup Verification procedures). Examples of systems that may not meet this description are "mini splits" or variable refrigerant flow systems that may only be charged using weigh-in procedures. Selecting "No" here may subject the project to additional scrutiny.
13. Specify the date the refrigerant charge verification was performed.
14. Select the refrigerant charge verification method used from the choices provided:
    - Superheat (outdoor temperature must be ≥ 55 degF); This verification method can only be used when the outdoor temperature is at or above 55 degF. It is only used on systems with fixed orifice refrigerant metering devices (non-variable metering devices). This method is detailed in Reference Appendix RA3.2.2.6.1. Systems verified using this method may be eligible for HERS verification compliance using sampling. Choosing this option will generate a CF2R-MCH-25a.
    - Subcooling (outdoor temperature must be ≥ 55 degF); This verification method can only be used when the outdoor temperature is at or above 55 degF. It is only used on systems with variable metering devices (TXV or EXV). This method is detailed in Reference Appendix RA3.2.2.6.2. Systems verified using this method may be eligible for HERS verification compliance using sampling. Choosing this option will generate a CF2R-MCH-25b.
    - Weigh-in; This verification method can be used at any outdoor temperature allowed by the equipment manufacturer. This method is detailed in Reference Appendix RA3.2.3. Systems

For information and data collection only. Not valid until registered with a HERS provider

verified using this method are NOT eligible for HERS verification compliance using Group Sampling. Choosing this option will generate a CF2R-MCH-25c.

- Winter Setup (applicable when outdoor temperature is < 55 degF); The Winter Setup verification method is a special version of the Subcooling method. It can be used when the outdoor temperature is between 37 and 55 degF. It can only be used on equipment where the manufacturer has specifically approved it for the equipment being tested. The Winter Setup procedure is details in Residential Appendix RA1.2. Choosing this option will generate a CF2R-MCH-25e.
- New Package Unit Factory Charge; Choose this option when a new package unit is being installed that has an AHRI rating. This helps ensure that the unit was properly charged at the factory. HERS verification of refrigerant charge may not be required in this case. Choosing this option will generate a CF2R-MCH-25f.

15. Identify who will be performing the verification that is documented on this Certificate of Installation, select from the two options. Note that HERS verification compliance by Group Sampling requires that the installer perform their own refrigerant charge verification as part of the installation of the equipment prior to the system being put into a sample group for possible selection by a HERS rater for verification. If Group Sampling is not intended, the HERS Rater may perform the refrigerant charge verification in behalf of the Installing Contractor (applies to any method but Weigh-In) and the Rater will enter same results on both the CF2R and CF3R.
16. The Group Sampling status is automatically displayed based on the input results of Row A14 and Row A15. Group Sampling procedures are detailed Residential Appendix RA2.3.

Section B. Metering Device Verification

1. Select the correct metering device used on the system being verified. This will check against the refrigerant charge verification method selected in Row A14. An error message will appear in Row B02 if the wrong verification method may has been selected. Superheat verification can only be used on systems with fixed orifice and Subcooling verification can only be used on systems with variable metering devices (TXV or EXV).
2. An error message in here indicates that the wrong verification method may have been selected. Superheat verification can only be used on systems with fixed orifice and Subcooling verification can only be used on systems with variable metering devices (TXV or EXV).

Section C. Instrument Calibration

1. Enter the date of most recent Digital Refrigerant Gauge Calibration Field Check. Analog gauges are not allowed for verification purposes under the 2013 Standards. Specification for pressure gauges is found in Residential Appendix RA3.2.2.2.3. Procedures for the field check procedure are detailed in RA3.2.2.4.2. Calibration field check must happen at least once every 30 days.
2. Enter the date of the most recent Digital Thermocouple Calibration. Specifications for thermocouples and temperature sensors can be found in Residential Appendix RA3.2.2.2.2. Procedures for calibration are detailed in RA3.2.2.4.1. Calibration must happen at least once every 30 days.
3. Digital Refrigerant Gauge Calibration status will appear automatically. If the date entered in Row C01 is more than 30 days prior to date of verification this row will indicate that calibration is required and you will not be allowed to continue filling out this document.

For information and data collection only. Not valid until registered with a HERS provider

4. Digital Thermocouple Calibration status will appear automatically. If the date entered in Row C02 is more than 30 days prior to date of verification this row will indicate that calibration is required and you will not be allowed to continue filling out this document.

Section D. Measurement Access Hole (MAH) Verification

1. Indicate the method used to demonstrate compliance with the MAH requirement by selecting the appropriate method from the drop down list. Procedures for installing MAH's are detailed in RA3.2.2.3. Selecting that the MAH cannot be installed consistent with Figure 3.2-1 may result in additional scrutiny by enforcement personnel.

Section E. Minimum System Airflow Rate Verification

1. This information is automatically calculated based on the information given in line A09. This is the target minimum system airflow required for the system being verified.
2. This information is automatically calculated based on the MCH-23 which documents the measured airflow of the system being verified. If the measured airflow is not adequate it will not comply with the airflow requirements and refrigerant charge verification cannot be performed.

Section F. Subcooling Charge Verification Method – Data Collection

1. Measure and record the lowest return air dry-bulb temperature that occurred during the refrigerant charge procedure in degrees F. This temperature must remain above 70 degF during the verification procedure. This requirement is detailed in Residential Appendix RA3.2.2.5.
2. Measure and record the condenser air dry-bulb temperature ($T_{condenser}$) in degrees F. This value must be at least 55 degF and no more than 115 degF to use the Subcooling Charge Verification Method.
3. If a value less than 55 degF or greater than 115 degF is entered in Row F02 the Subcooling Method cannot be used.
4. Measure and record the liquid line temperature (T_{liquid}) in degrees F. This procedure is detailed in RA3.2.2.5. This value is used to calculate the measured subcool temperature.
5. Measure and record the liquid line pressure (P_{liquid}) in psig. This procedure is detailed in RA3.2.2.5. This value is used to determine the condenser saturation temperature ($T_{condenser,sat}$) from a pressure temperature chart for the appropriate refrigerant (can be internal to a digital gauge), which is entered into Row F06.
6. Enter the condenser saturation temperature ($T_{condenser,sat}$) from the digital gauge or a separate pressure-temperature chart that corresponds to the liquid line pressure entered in Row F05, in degrees F.
7. Measured Subcooling is automatically calculated as the difference between the liquid line temperature (Row F04) and the condenser saturation temperature (Row F06)
8. Enter target subcooling from manufacturer. This may be a challenge to find for older equipment. Internet searches can sometimes result in archived equipment specifications for the equipment in question, or sometimes a very similar model. If the manufacturer's target cannot be found the Commission's Executive Director may provide additional guidance for compliance.
9. System passes Subcooling method when Row F08 is within plus or minus 5 degrees of Row F07.

For information and data collection only. Not valid until registered with a HERS provider

Section G. Metering Device Verification

1. Measure and record the suction line temperature ($T_{suction}$) in degrees F. This procedure is detailed in RA3.2.2.5. This value is used to calculate the measured superheat.
2. Measure and record the suction line pressure ($P_{suction}$) in psig. This procedure is detailed in RA3.2.2.5. This value is used to determine the evaporator saturation temperature ($T_{evaporator,sat}$) from a pressure temperature chart for the appropriate refrigerant (can be internal to a digital gauge), which is entered into Row G03.
3. Enter the evaporator saturation temperature ($T_{evaporator,sat}$) from the digital gauge or a separate pressure-temperature chart that corresponds to the suction line pressure entered in Row G02, in degrees F.
4. Measured superheat is automatically calculated as the difference between the suction line temperature (Row G01) and the evaporator saturation temperature (Row G03)
5. There are two possible criteria for passing. If the manufacturer's specification is known it should be used, otherwise the CEC requirement is that the superheat be between 4 and 25 degF, inclusive. This row checks the CEC requirement.
6. If the manufacturer's target superheat for ensuring proper metering device operation is known, it supersedes the CEC requirement of being between 4 and 25 degF. If "Yes, documentation to be provided upon request." is selected, the installer should be prepared to provide documentation for the target values used.
7. There are two possible criteria for passing. If the manufacturer's specification is known it should be used, otherwise the CEC requirement is that the superheat be between 4 and 25 degF, inclusive. If "Yes, documentation to be provided upon request." is selected in Row G06, the installer should be prepared to provide documentation for the target values used.

Section H. Verification of Charge Indicator Display

1. Enter the manufacturer name or make of the approved Charge Indicator Display. Must match name shown on the list of approved devices kept by the Commission.
2. Enter the manufacturer model number of the approved Charge Indicator Display. Must match name shown on the list of approved devices kept by the Commission.
3. The installer must confirm that the CID display module is mounted adjacent to thermostat that controls the system being verified. This requirement is detailed in Residential Appendix RA3.4.2.
4. The installer must confirm that the installed CID is approved and appears the list of approved devices kept by the Commission. This requirement is detailed in Residential Appendix RA3.4.2.
5. The installer must confirm that the system has operated for at least 15 minutes and that they system is operating within acceptable parameters as specified by the CID and equipment manufacturers. This requirement is detailed in Residential Appendix RA3.4.2.

For information and data collection only. Not valid until registered with a HERS provider

CERTIFICATE OF INSTALLATION		CF2R-MCH-25-H
Refrigerant Charge Verification		(Page 1 of 5)
Project Name:	Enforcement Agency:	Permit Number:
Dwelling Address:	City	Zip Code

A. System Information

Each system requiring refrigerant charge verification will be documented on a separate certificate.

01	System Identification or Name	
02	System Location or Area Served	
03	Condenser (or package unit) make or brand	
04	Condenser (or package unit) model number	
05	Nominal Cooling Capacity (tons) of Condenser	
06	Condenser (or package unit) serial number	
07	Refrigerant Type	
08	Other Refrigerant Type (if applicable)	
09	Project Type	
10	Charge Indicator Display (CID) Status (Note: Even systems with a CID must have refrigerant charge verified by installer)	
11	Is the system of a type that the minimum airflow can be verified using an approved measurement procedure (RA3.3 or RA3.2.2.7)?	
12	Is the system of a type that approved refrigerant charge verification procedures can be used to verify compliance with the refrigerant charge verification requirements when temperatures are ≥ 55°F (RA3.2.2, or RA1)?	
13	Date of Refrigerant Charge Verification for this system	
14	Refrigerant charge verification method used.	
15	Person who performed the Refrigerant Charge Verification reported on this Certificate of Installation:	
16	HERS Verification Compliance Requirement Status	

For information and data collection only. Not valid until registered with a HERS provider

CERTIFICATE OF INSTALLATION		CF2R-MCH-25-H
Refrigerant Charge Verification		(Page 2 of 5)
Project Name:	Enforcement Agency:	Permit Number:
Dwelling Address:	City	Zip Code

Weigh In Charging Procedure - MCH25c

B. Instrument Calibration Procedures for instrument calibration are given in Reference Residential Appendix RA3.2.2 and RA3.2.3.1.4		
01	Date of expiration of Digital Refrigerant Scale Calibration	
02	Date of Digital Thermometer and Temperature Sensor Calibration	
03	Digital Refrigerant Scale Calibration Status	
04	Digital Thermocouple Calibration Status	

<<if A11=NO, then this table C is not used (system is exempt from MAH requirements)>>

C. Measurement Access Hole (MAH) Verification Procedures for installing MAH are specified in Reference Residential Appendix RA3.2.2.3		
01	Method used to demonstrate compliance with the Measurement Access Hole (MAH) requirement	

<<if A11=NO, then this table D is not used (system is exempt from Airflow Rate verification requirements)>>

D. Minimum System Airflow Rate Verification *Procedures for verifying minimum system airflow are specified in Reference Residential Appendix RA3.2.2.7.*		
01	Minimum Required System Airflow Rate (cfm)	
02	System Airflow Rate Verification Status	

For information and data collection only. Not valid until registered with a HERS provider

CERTIFICATE OF INSTALLATION		CF2R-MCH-25-H
Refrigerant Charge Verification		(Page 3 of 5)
Project Name:	Enforcement Agency:	Permit Number:
Dwelling Address:	City	Zip Code

E. Weigh In Charge Procedure

Procedures for Refrigerant Charge using the Weigh-in Charging Procedure are given in Reference Residential Appendix RA3.2.2.2 and RA3.2.3

01	Measured Outside Air dry-bulb temperature (degreeF)	
02	Specify the method of weigh-in	
03	**Manufacturer's standard charge for condenser (lbs, oz.)**	<
04	Manufacturer's Standard liquid line length (ft)	
05	Manufacturer's Standard liquid line diameter (in)	
06	Manufacturer's Standard indoor coil size (tons)	
07	Installed liquid line length (ft)	
08	Installed liquid line diameter (in)	
09	Installed indoor coil size (tons)	
10	**Charge adjustment to standard charge from manufacturer's specifications (ounces, positive = add, negative = remove)**	
11	Refrigerant required to be weighed in by the installer (lbs, oz)	
12	**Refrigerant weighed in by Installer (lbs, oz)**	
13	compliance statement:	

F. WEIGH IN CHARGE PROCEDURE – ADDITIONAL REQUIREMENTS

THE RESPONSIBLE PERSONS SIGNATURE ON THIS DOCUMENT INDICATES THE INSTALLATION COMPLIES WITH THE FOLLOWING REQUIREMENTS:

01	All brazing of refrigerant lines done with dry nitrogen in lines and evaporator coil
02	Prior to introducing refrigerant, system is evacuated to 500 microns or less and, when isolated, has risen no more than 300 microns after 5 minutes.

For information and data collection only. Not valid until registered with a HERS provider

CERTIFICATE OF INSTALLATION		CF2R-MCH-25-H
Refrigerant Charge Verification		(Page 4 of 5)
Project Name:	Enforcement Agency:	Permit Number:
Dwelling Address:	City	Zip Code

<<If A10 = "This system has a factory installed CID"; or "This system has a field installed CID", then display this section>>

G. Charge Indicator Display *Procedures for the Charge Indicator Display Verification are detailed in RA3.4.2*		
01	CID Manufacturer Name/Make	
02	CID Model Number	
03	The display module is mounted adjacent to the system thermostat	
04	The manufacturer has certified to the Energy Commission that the CID model meets the requirements of Reference Joint Appendix JA6 (Make and model found on CEC list of approved CID devices)	
05	The system has operated for at least 15 minutes and the CID reports that the system is operating within acceptable parameters.	

<<If A10 = "This system has a factory installed CID"; or "This system has a field installed CID", then display this section>>

H. CHARGE INDICATOR DISPLAY – ADDITIONAL REQUIREMENTS	
THE RESPONSIBLE PERSONS SIGNATURE ON THIS DOCUMENT INDICATES THE INSTALLATION COMPLIES WITH THE FOLLOWING REQUIREMENTS:	
01	Charge indicator display devices shall either be factory installed by the space-conditioning system manufacturer, or field installed according to the space-conditioning system manufacturer's requirements and the CID manufacturer's specifications.
02	The installer shall ensure that a copy of the CID manufacturer's user instructions documentation has been made available to the building owner.

For information and data collection only. Not valid until registered with a HERS provider

CERTIFICATE OF INSTALLATION		CF2R-MCH-25-H
Refrigerant Charge Verification		(Page 5 of 5)
Project Name:	Enforcement Agency:	Permit Number:
Dwelling Address:	City	Zip Code

DOCUMENTATION AUTHOR'S DECLARATION STATEMENT

1. I certify that this Certificate of Installation documentation is accurate and complete.

Documentation Author Name:	Documentation Author Signature:
Documentation Author Company Name:	Date Signed:
Address:	CEA/HERS Certification Identification (If applicable):
City/State/Zip:	Phone:

RESPONSIBLE PERSON'S DECLARATION STATEMENT

I certify the following under penalty of perjury, under the laws of the State of California:

1. The information provided on this Certificate of Installation is true and correct.
2. I am eligible under Division 3 of the Business and Professions Code in the applicable classification to accept responsibility for the system design, construction, or installation of features, materials, components, or manufactured devices for the scope of work identified on this Certificate of Installation and attest to the declarations in this statement (responsible builder/installer), otherwise I am an authorized representative of the responsible builder/installer.
3. The constructed or installed features, materials, components or manufactured devices (the installation) identified on this Certificate of Installation conforms to all applicable codes and regulations, and the installation conforms to the requirements given on the plans and specifications approved by the enforcement agency.
4. I understand that a HERS rater will check the installation to verify compliance, and that if such checking identifies defects; I am required to take corrective action at my expense. I understand that Energy Commission and HERS Provider representatives will also perform quality assurance checking of installations, including those approved as part of a sample group but not checked by a HERS rater, and if those installations fail to meet the requirements of such quality assurance checking, the required corrective action and additional checking/testing of other installations in that HERS sample group will be performed at my expense.
5. I reviewed a copy of the Certificate of Compliance approved by the enforcement agency that identifies the specific requirements for the scope of construction or installation identified on this Certificate of Installation, and I have ensured that the requirements that apply to the construction or installation have been met.
6. I will ensure that a registered copy of this Certificate of Installation shall be posted, or made available with the building permit(s) issued for the building, and made available to the enforcement agency for all applicable inspections. I understand that a registered copy of this Certificate of Installation is required to be included with the documentation the builder provides to the building owner at occupancy.

Responsible Builder/Installer Name:	Responsible Builder/Installer Signature:	
Company Name: (Installing Subcontractor or General Contractor or Builder/Owner)	Position With Company (Title):	
Address:	CSLB License:	
City/State/Zip:	Phone	Date Signed:
Third Party Quality Control Program (TPQCP) Status:	Name of TPQCP (if applicable):	

For information and data collection only. Not valid until registered with a HERS provider

Instructions MCH-25c:

Section A. System Information

1. This information is automatically pulled from the Certificate of Installation (MCH-01).
2. This information is automatically pulled from the Certificate of Installation (MCH-01)
3. This information is automatically pulled from the Certificate of Installation (MCH-01).
4. This information is automatically pulled from the Certificate of Installation (MCH-01)
5. This information is automatically pulled from the Certificate of Installation (MCH-01).
6. This information is automatically pulled from the Certificate of Installation (MCH-01)
7. Choose the type of refrigerant used by the system being verified.
8. If "Other" is chosen in Row A07, then indicate the type of refrigerant being used. If R-22 or R-410A is being used (regardless of trade name, Puron, Genetron, etc.) it should be indicated in Row A07. This row is only for refrigerants other than R-22 and R-410a. Documentation of refrigerant may be requested.
9. Indicate whether the HVAC system is Completely New, Replacement or an Alteration. These are defined in detail the Residential Compliance Manual.
10. Select the appropriate choice regarding whether this system has a Charge Indicator Display (CID). Qualifying CID's may exempt a system from HERS refrigerant charge verification. CID's are described in Joint Appendix JA6.1. Qualifying CID's must appear on a list of approved devices kept by the Commission.
11. Most ducted split systems and package systems are of the type that minimum airflow can be verified using an approved measurement procedure. Examples of systems that do not meet this description are ductless systems. Selecting "No" here may subject the project to additional scrutiny by enforcement personnel.
12. Most ducted split systems and package systems are of the type that approved refrigerant charge verification procedures detailed in Residential Appendix RA3.2.2 or RA1 can be used (i.e., Standard Charge Verification or Winter Setup Verification procedures). Examples of systems that may not meet this description are "mini splits" or variable refrigerant flow systems that may only be charged using weigh-in procedures. Selecting "No" here may subject the project to additional scrutiny.
13. Specify the date the refrigerant charge verification was performed.
14. Select the refrigerant charge verification method used from the choices provided:
    - Superheat (outdoor temperature must be ≥ 55 degF); This verification method can only be used when the outdoor temperature is at or above 55 degF. It is only used on systems with fixed orifice refrigerant metering devices (non-variable metering devices). This method is detailed in Reference Appendix RA3.2.2.6.1. Systems verified using this method may be eligible for HERS verification compliance using sampling. Choosing this option will generate a CF2R-MCH-25a.
    - Subcooling (outdoor temperature must be ≥ 55 degF); This verification method can only be used when the outdoor temperature is at or above 55 degF. It is only used on systems with variable metering devices (TXV or EXV). This method is detailed in Reference Appendix RA3.2.2.6.2. Systems verified using this method may be eligible for HERS verification compliance using sampling. Choosing this option will generate a CF2R-MCH-25b.
    - Weigh-in; This verification method can be used at any outdoor temperature allowed by the equipment manufacturer. This method is detailed in Reference Appendix RA3.2.3. Systems

For information and data collection only. Not valid until registered with a HERS provider

verified using this method are NOT eligible for HERS verification compliance using Group Sampling. Choosing this option will generate a CF2R-MCH-25c.

- Winter Setup (applicable when outdoor temperature is < 55 degF); The Winter Setup verification method is a special version of the Subcooling method. It can be used when the outdoor temperature is between 37 and 55 degF. It can only be used on equipment where the manufacturer has specifically approved it for the equipment being tested. The Winter Setup procedure is details in Residential Appendix RA1.2. Choosing this option will generate a CF2R-MCH-25e.
- New Package Unit Factory Charge; Choose this option when a new package unit is being installed that has an AHRI rating. This helps ensure that the unit was properly charged at the factory. HERS verification of refrigerant charge may not be required in this case. Choosing this option will generate a CF2R-MCH-25f.

15. Identify who will be performing the verification that is documented on this Certificate of Installation, select from the two options. Note that HERS verification compliance by Group Sampling requires that the installer perform their own refrigerant charge verification as part of the installation of the equipment prior to the system being put into a sample group for possible selection by a HERS rater for verification. If Group Sampling is not intended, the HERS Rater may perform the refrigerant charge verification in behalf of the Installing Contractor (applies to any method but Weigh-In) and the Rater will enter same results on both the CF2R and CF3R.
16. The Group Sampling status is automatically displayed based on the input results of Row A14 and Row A15. Group Sampling procedures are detailed Residential Appendix RA2.3.

Section B. Instrument Calibration

1. Enter the date that Digital Refrigerant Scale calibration expires. Digital Refrigerant Scales must be calibrated according to manufacturer's specifications. This requirement is in Residential Appendix RA3.2.1.4.1. A sticker must be affixed to the scale that shows the calibration check date (expiration date).
2. Enter the date of the most recent Digital Thermocouple Calibration. Specifications for thermocouples and temperature sensors can be found in Residential Appendix RA3.2.2.2.2. Procedures for calibration are detailed in RA3.2.2.4.1. Calibration must happen at least once every 30 days.
3. Digital Refrigerant Scale Calibration status will appear automatically. If the date entered in Row C01 is prior to date of verification this row will indicate that calibration is required and you will not be allowed to continue filling out this document.
4. Digital Thermocouple Calibration status will appear automatically. If the date entered in Row C02 is more than 30 days prior to date of verification this row will indicate that calibration is required and you will not be allowed to continue filling out this document.

Section C. Measurement Access Hole (MAH) Verification

Note: if A11=NO, then this table C is not used (system is exempt from MAH requirements)

1. Indicate the method used to demonstrate compliance with the MAH requirement by selecting the appropriate method from the drop down list. Procedures for installing MAH's are detailed in RA3.2.2.3. Selecting that the MAH cannot be installed consistent with Figure 3.2-1 may result in additional scrutiny by enforcement personnel.

For information and data collection only. Not valid until registered with a HERS provider

Section D. Minimum System Airflow Rate Verification

Note: if A11=NO, then this table D is not used (system is exempt from Airflow Rate verification requirements)

1. This information is automatically calculated based on the information given in line A09. This is the target minimum system airflow required for the system being verified.
2. This information is automatically calculated based on the MCH-23which documents the measured airflow of the system being verified. If the measured airflow is not adequate it will not comply with the airflow requirements and refrigerant charge verification cannot be performed.

Section E. Weigh In Charge Procedure

1. Measure and record the outside air dry-bulb temperature in degrees F. This will affect the procedures that may be used for HERS verification.
2. Specify the method of weigh-in. There are two options that may be used. One is to add or remove a small, weighed portion of refrigerant from a factory charged unit (Charge Adjustment). The other is to weigh the entire charge of refrigerant before introducing it into the system (Total Charge). Select either one. Note: The amount of refrigerant in systems that are not newly installed cannot be assumed to be the factory charge. Systems using existing refrigerant must use the Total Charge method. Only new, factory installed equipment can utilize the Charge Adjustment method.
3. Enter the Manufacturer's Standard Charge for condenser in pounds and ounces. This is the amount of refrigerant that the manufacturer specifies for a "standard" installation (typical coil match, typical line set size and length). For the Charge Adjustment method, this is the amount of refrigerant that factory charges the system to. Be prepared to provide manufacturer's documentation to support this value.
4. The Manufacturer's Standard Charge, specified in E03 is based on a standard liquid line length, typically 25 feet. Enter the value here, in feet. Be prepared to provide manufacturer's documentation to support this value.
5. The Manufacturer's Standard Charge, specified in E03 is based on a standard liquid line diameter. Enter the value here, in inches (for example: 1/4", 3/8", etc.). Be prepared to provide manufacturer's documentation to support this value.
6. The Manufacturer's Standard Charge, specified in E03 is based on a standard indoor (evaporator) coil size. Enter the value here, in tons. Be prepared to provide manufacturer's documentation to support this value.
7. Enter the length of the liquid line installed on the system being verified, in feet. This value must be compared to the standard liquid line length entered in E04 and used to determine if the Manufacturer's Standard Charge entered in E03 is appropriate.
8. Enter the diameter of the liquid line installed on the system being verified, in inches (for example: 1/4", 3/8", etc.). This value must be compared to the standard liquid line diameter entered in E05 and used to determine if the Manufacturer's Standard Charge entered in E03 is appropriate.
9. Enter the size of the indoor (evaporator) coil installed on the system being verified, in tons. This value must be compared to the standard coil size entered in E06 and used to determine if the Manufacturer's Standard Charge entered in E03 is appropriate.
10. Enter the Charge Adjustment to Standard Charge, in ounces. This is the amount of refrigerant that the manufacturer specifies to add to, or remove from, the Manufacturer's Standard Charge entered in E03. This value must come from manufacturer's specifications using the standard values entered in Rows E04 through E06 to the installed values entered in Rows E07 through E09. If refrigerant is to be added,

For information and data collection only. Not valid until registered with a HERS provider

this value should be a positive number. If refrigerant is to be removed, this value should be a negative number. Be prepared to provide manufacturer's documentation to support this value.

11. This value is calculated automatically. If "Charge Adjustment" was specified in Row E02, then the value shown here will be the same as the value shown in Row E10. This is the amount of weighed refrigerant that will be added or removed from the factory charged unit. If refrigerant is to be added, this value should be a positive number. If refrigerant is to be removed, this value should be a negative number. If "Total Charge" was specified in Row E02, then the value shown here will be the value in row E03 added to the value in row E10. This is the total amount of refrigerant that will be in the system, all of which must be weighed before introducing into the system.
12. Enter the amount of refrigerant weighed and added to, or removed from, system. If refrigerant is to be added, this value should be a positive number. If refrigerant is to be removed from a factory charged system, this value should be a negative number. This value must match the value in E11 for the system to pass.
13. If the value in line E11 equals the value in line E12, a statement will appear here indicating that the system passes the weigh-in method. Otherwise, a statement will appear here indicating that the system does not pass.

Section F. Weigh In Charge Verification – Additional Requirements

1. Additional requirements are items that must be done, but are not specifically required to be checked by the HERS rater. By signing the Declaration Statement on this document, the installer is declaring that all of these additional requirements have been met. The requirement for brazing lines charged with dry nitrogen is specified in Residential Appendix RA3.2.3.1.5.
2. Additional requirements are items that must be done, but are not specifically required to be checked by the HERS rater. By signing the Declaration Statement on this document, the installer is declaring that all of these additional requirements have been met. The requirement for checking refrigerant lines for leaks by evacuating to 500 microns or less and rising by no more than 300 microns after 5 minutes is specified in Residential Appendix RA3.2.3.1.5.

Section G. Verification of Charge Indicator Display

1. Enter the manufacturer name or make of the approved Charge Indicator Display. Must match name shown on the list of approved devices kept by the Commission.
2. Enter the manufacturer model number of the approved Charge Indicator Display. Must match name shown on the list of approved devices kept by the Commission.
3. The installer must confirm that the CID display module is mounted adjacent to thermostat that controls the system being verified. This requirement is detailed in Residential Appendix RA3.4.2.
4. The installer must confirm that the installed CID is approved and appears the list of approved devices kept by the Commission. This requirement is detailed in Residential Appendix RA3.4.2.
5. The installer must confirm that the system has operated for at least 15 minutes and that they system is operating within acceptable parameters as specified by the CID and equipment manufacturers. This requirement is detailed in Residential Appendix RA3.4.2.

Section H. Indicator Display – Additional Requirements

For information and data collection only. Not valid until registered with a HERS provider

1. Additional requirements are items that must be done, but are not specifically required to be checked by the HERS rater. By signing the Declaration Statement on this document, the installer is declaring that all of these additional requirements have been met. The requirement for installing CIDs to manufacturer's specifications (unless factory installed) can be found in Joint Appendix JA6.1.3.
2. Additional requirements are items that must be done, but are not specifically required to be checked by the HERS rater. By signing the Declaration Statement on this document, the installer is declaring that all of these additional requirements have been met. The requirement for providing manufacturer's instructions and other documentation for CIDs can be found in Joint Appendix JA6.1.4.

For information and data collection only. Not valid until registered with a HERS provider

CERTIFICATE OF INSTALLATION		CF2R-MCH-25-H
Refrigerant Charge Verification		(Page 1 of 6)
Project Name:	Enforcement Agency:	Permit Number:
Dwelling Address:	City	Zip Code

A. System Information

Each system requiring refrigerant charge verification will be documented on a separate certificate.

01	System Identification or Name	
02	System Location or Area Served	
03	Condenser (or package unit) make or brand	
04	Condenser (or package unit) model number	
05	Nominal Cooling Capacity (tons) of Condenser	
06	Condenser (or package unit) serial number	
07	Refrigerant Type	
08	Other Refrigerant Type (if applicable)	
09	Project Type	
10	Charge Indicator Display (CID) Status (Note: Even systems with a CID must have refrigerant charge verified by installer)	
11	Is the system of a type that the minimum airflow can be verified using an approved measurement procedure (RA3.3 or RA3.2.2.7)?	
12	Is the system of a type that approved refrigerant charge verification procedures can be used to verify compliance with the refrigerant charge verification requirements when temperatures are ≥ 55°F (RA3.2.2, or RA1)?	
13	Date of Refrigerant Charge Verification for this system	
14	Refrigerant charge verification method used.	
15	Person who performed the Refrigerant Charge Verification reported on this Certificate of Installation:	
16	HERS Verification Compliance Requirement Status	

For information and data collection only. Not valid until registered with a HERS provider

Winter Setup Charge Verification Procedure - MCH25e

- *Winter Setup for the Standard Charge Verification Procedure is specified in Reference Residential Appendix RA1.2.*
- *Procedures for determining Refrigerant Charge using the Standard Charge Verification Procedure are given in Reference Residential Appendix RA3.2.2.*

B. System Model Applicability for Winter Setup Method		
01	Refrigerant metering device	
02	Winter Setup Method applicability status	
03	**The responsible person's signature on this document indicates confirmation that the installed model number is currently listed as approved for Winter Setup Method on the Energy Commission website:** http://www.energy.ca.gov/title24/2008standards/special_case_appliance/	

C. Instrument Calibration *Instrumentation specifications and procedures for instrument calibration are given in Reference Residential Appendix RA3.2.2.2 and RA3.2.2.4. respectively.*		
01	Date of Digital Refrigerant Gauge Calibration	
02	Date of Digital Thermocouple Calibration	
03	Digital Refrigerant Gauge Calibration Status	
04	Digital Thermocouple Calibration Status	

D. Measurement Access Hole (MAH) Verification *Procedures for installing MAH are specified in Reference Residential Appendix RA3.2.2.3*		
01	Method used to demonstrate compliance with the Measurement Access Hole (MAH) requirement	

E. Minimum System Airflow Rate Verification *Procedures for verifying minimum system airflow are specified in Reference Residential Appendix RA3.2.2.7.*		
01	Minimum Required System Airflow Rate (cfm)	
02	System Airflow Rate Verification Status	

For information and data collection only. Not valid until registered with a HERS provider

CERTIFICATE OF INSTALLATION		CF2R-MCH-25-H
Refrigerant Charge Verification		(Page 3 of 6)
Project Name:	Enforcement Agency:	Permit Number:
Dwelling Address:	City	Zip Code

F. Data Collection and Calculations

Procedures for data collection and variable metering device calculations are given in Reference Residential Appendix RA3.2.2.5 and RA3.2.2.6.2 respectively.

01	The responsible person's signature on this document indicates confirmation that, with a Condenser Outlet Air Restrictor installed, and after system operation was stabilized for at least 15 minutes, throughout the data collection for this verification, the difference between the liquid line pressure and suction line pressure was maintained between 160 and 220 psi for R-410A systems, or between 100 and 145 psi for R-22 systems.	
02	Lowest return air dry bulb temperature that occurred during the refrigerant charge verification procedure (degreeF)	
03	Measured Condenser air entering dry-bulb temperature ($T_{condenser, db}$) (degreeF)	
04	Outdoor Temperature Qualification Status	
05	Measured Liquid Line Temperature (T_{liquid}) (degreeF)	
06	Measured Liquid Line Pressure (P_{liquid}) (pisg)	
07	Condenser saturation temperature ($T_{condensor, sat}$) from digital gauge or P-T Table using Line F06 (degree F)	
08	Measured Subcool (Line F07 – Line F05) (degree F)	
09	Target Subcool from Manufacturer (degree F)	
10	Compliance Statement:	

G. Metering Device Verification

Procedures for the verification of proper metering device operation are specified in RA3.2.2.5.2

01	Measured Suction line temperature ($T_{suction}$) (degreeF)	
02	Measured Suction line pressure ($P_{suction}$) (psig)	
03	Evaporator saturation temperature ($T_{evaporator, sat}$) from digital gauge or P-T Table using line G02 (degreeF)	
04	Measured Superheat (Line G01 – Line G03) (degreeF)	
05	Measured Superheat (Line G04) is between 4 and 25 deg F (inclusive)	
06	Measured Superheat (Line G04) is within manufacturer's specifications, if known.	
07	Compliance Statement:	

For information and data collection only. Not valid until registered with a HERS provider

CERTIFICATE OF INSTALLATION		CF2R-MCH-25-H
Refrigerant Charge Verification		(Page 4 of 6)
Project Name:	Enforcement Agency:	Permit Number:
Dwelling Address:	City	Zip Code

H. Confirmation of Refrigerant Pressure Differential *Procedures for the Winter Setup are detailed in RA1.2.22*		
01	P_{high}, – P_{low} (psi) from F06 and G02	
02	Compliance Statement:	

If A10 = "This system has a factory installed CID"; or "This system has a field installed CID", then use this section

I. Charge Indicator Display *Procedures for the Charge Indicator Display Verification are detailed in RA3.4.2*		
01	CID Manufacturer Name/Make	
02	CID Model Number	
03	The display module is mounted adjacent to the system thermostat	
04	The manufacturer has certified to the Energy Commission that the CID model meets the requirements of Reference Joint Appendix JA6 (Make and model found on CEC list of approved CID devices)	
05	The system has operated for at least 15 minutes and the CID reports that the system is operating within acceptable parameters.	

For information and data collection only. Not valid until registered with a HERS provider

CERTIFICATE OF INSTALLATION		CF2R-MCH-25-H
Refrigerant Charge Verification		(Page 5 of 6)
Project Name:	Enforcement Agency:	Permit Number:
Dwelling Address:	City	Zip Code

If A10 = "This system has a factory installed CID"; or "This system has a field installed CID", then this section is applicable

J. CHARGE INDICATOR DISPLAY – ADDITIONAL REQUIREMENTS	
THE RESPONSIBLE PERSONS SIGNATURE ON THIS DOCUMENT INDICATES THE INSTALLATION COMPLIES WITH THE FOLLOWING REQUIREMENTS:	
01	Charge indicator display devices shall either be factory installed by the space-conditioning system manufacturer, or field installed according to the space-conditioning system manufacturer's requirements and the CID manufacturer's specifications.
02	The installer shall ensure that a copy of the CID manufacturer's user instructions documentation has been made available to the building owner.

DOCUMENTATION AUTHOR'S DECLARATION STATEMENT

1. I certify that this Certificate of Installation documentation is accurate and complete.

Documentation Author Name:	Documentation Author Signature:
Documentation Author Company Name:	Date Signed:
Address:	CEA/HERS Certification Identification (If applicable):
City/State/Zip:	Phone:

RESPONSIBLE PERSON'S DECLARATION STATEMENT

I certify the following under penalty of perjury, under the laws of the State of California:

1. The information provided on this Certificate of Installation is true and correct.
2. I am eligible under Division 3 of the Business and Professions Code in the applicable classification to accept responsibility for the system design, construction, or installation of features, materials, components, or manufactured devices for the scope of work identified on this Certificate of Installation and attest to the declarations in this statement (responsible builder/installer), otherwise I am an authorized representative of the responsible builder/installer.
3. The constructed or installed features, materials, components or manufactured devices (the installation) identified on this Certificate of Installation conforms to all applicable codes and regulations, and the installation conforms to the requirements given on the plans and specifications approved by the enforcement agency.
4. I understand that a HERS rater will check the installation to verify compliance, and that if such checking identifies defects; I am required to take corrective action at my expense. I understand that Energy Commission and HERS Provider representatives will also perform quality assurance checking of installations, including those approved as part of a sample group but not checked by a HERS rater, and if those installations fail to meet the requirements of such quality assurance checking, the required corrective action and additional checking/testing of other installations in that HERS sample group will be performed at my expense.
5. I reviewed a copy of the Certificate of Compliance approved by the enforcement agency that identifies the specific requirements for the scope of construction or installation identified on this Certificate of Installation, and I have ensured that the requirements that apply to the construction or installation have been met.
6. I will ensure that a registered copy of this Certificate of Installation shall be posted, or made available with the building permit(s) issued for the building, and made available to the enforcement agency for all applicable inspections. I understand that a registered copy of this Certificate of Installation is required to be included with the documentation the builder provides to the building owner at occupancy.

Responsible Builder/Installer Name:	Responsible Builder/Installer Signature:	
Company Name: (Installing Subcontractor or General Contractor or Builder/Owner)	Position With Company (Title):	
Address:	CSLB License:	
City/State/Zip:	Phone	Date Signed:
Third Party Quality Control Program (TPQCP) Status:	Name of TPQCP (if applicable):	

For information and data collection only. Not valid until registered with a HERS provider

CERTIFICATE OF INSTALLATION		CF2R-MCH-25-H
Refrigerant Charge Verification		(Page 6 of 6)
Project Name:	Enforcement Agency:	Permit Number:
Dwelling Address:	City	Zip Code

For information and data collection only. Not valid until registered with a HERS provider

Instructions MCH-25e:

Section A. System Information

1. This information is automatically pulled from the Certificate of Installation (MCH-01).
2. This information is automatically pulled from the Certificate of Installation (MCH-01)
3. This information is automatically pulled from the Certificate of Installation (MCH-01).
4. This information is automatically pulled from the Certificate of Installation (MCH-01)
5. This information is automatically pulled from the Certificate of Installation (MCH-01).
6. This information is automatically pulled from the Certificate of Installation (MCH-01)
7. Choose the type of refrigerant used by the system being verified.
8. If "Other" is chosen in Row A07, then indicate the type of refrigerant being used. If R-22 or R-410A is being used (regardless of trade name, Puron, Genetron, etc.) it should be indicated in Row A07. This row is only for refrigerants other than R-22 and R-410a. Documentation of refrigerant may be requested.
9. Indicate whether the HVAC system is Completely New, Replacement or an Alteration. These are defined in detail the Residential Compliance Manual.
10. Select the appropriate choice regarding whether this system has a Charge Indicator Display (CID). Qualifying CID's may exempt a system from HERS refrigerant charge verification. CID's are described in Joint Appendix JA6.1. Qualifying CID's must appear on a list of approved devices kept by the Commission.
11. Most ducted split systems and package systems are of the type that minimum airflow can be verified using an approved measurement procedure. Examples of systems that do not meet this description are ductless systems. Selecting "No" here may subject the project to additional scrutiny by enforcement personnel.
12. Most ducted split systems and package systems are of the type that approved refrigerant charge verification procedures detailed in Residential Appendix RA3.2.2 or RA1 can be used (i.e., Standard Charge Verification or Winter Setup Verification procedures). Examples of systems that may not meet this description are "mini splits" or variable refrigerant flow systems that may only be charged using weigh-in procedures. Selecting "No" here may subject the project to additional scrutiny.
13. Specify the date the refrigerant charge verification was performed.
14. Select the refrigerant charge verification method used from the choices provided:
    - Superheat (outdoor temperature must be ≥ 55 degF); This verification method can only be used when the outdoor temperature is at or above 55 degF. It is only used on systems with fixed orifice refrigerant metering devices (non-variable metering devices). This method is detailed in Reference Appendix RA3.2.2.6.1. Systems verified using this method may be eligible for HERS verification compliance using sampling. Choosing this option will generate a CF2R-MCH-25a.
    - Subcooling (outdoor temperature must be ≥ 55 degF); This verification method can only be used when the outdoor temperature is at or above 55 degF. It is only used on systems with variable metering devices (TXV or EXV). This method is detailed in Reference Appendix RA3.2.2.6.2. Systems verified using this method may be eligible for HERS verification compliance using sampling. Choosing this option will generate a CF2R-MCH-25b.
    - Weigh-in; This verification method can be used at any outdoor temperature allowed by the equipment manufacturer. This method is detailed in Reference Appendix RA3.2.3. Systems

For information and data collection only. Not valid until registered with a HERS provider.

verified using this method are NOT eligible for HERS verification compliance using Group Sampling. Choosing this option will generate a CF2R-MCH-25c.

- Winter Setup (applicable when outdoor temperature is < 55 degF); The Winter Setup verification method is a special version of the Subcooling method. It can be used when the outdoor temperature is between 37 and 55 degF. It can only be used on equipment where the manufacturer has specifically approved it for the equipment being tested. The Winter Setup procedure is details in Residential Appendix RA1.2. Choosing this option will generate a CF2R-MCH-25e.
- New Package Unit Factory Charge; Choose this option when a new package unit is being installed that has an AHRI rating. This helps ensure that the unit was properly charged at the factory. HERS verification of refrigerant charge may not be required in this case. Choosing this option will generate a CF2R-MCH-25f.

15. Identify who will be performing the verification that is documented on this Certificate of Installation, select from the two options. Note that HERS verification compliance by Group Sampling requires that the installer perform their own refrigerant charge verification as part of the installation of the equipment prior to the system being put into a sample group for possible selection by a HERS rater for verification. If Group Sampling is not intended, the HERS Rater may perform the refrigerant charge verification in behalf of the Installing Contractor (applies to any method but Weigh-In) and the Rater will enter same results on both the CF2R and CF3R.
16. The Group Sampling status is automatically displayed based on the input results of Row A14 and Row A15. Group Sampling procedures are detailed Residential Appendix RA2.3.

Section B. System Model Applicability for Winter Setup Method

1. Select the correct metering device used on the system being verified. This will check against the refrigerant charge verification method selected in Row A14. An error message will appear in Row B02 if the wrong verification method may has been selected. The Winter Setup Method can only be used on systems with variable metering devices (TXV or EXV).
2. An error message in here indicates that the wrong verification method may have been selected. The Winter Setup Method can only be used on systems with variable metering devices (TXV or EXV).
3. Winter Setup Method shall only be used on system model numbers that have a TXV or EXV, and for which the manufacturer has provided written approval to the energy Commission indicating that the Winter Setup Method may be used to verify refrigerant charge. The list of approved systems can be found at the web address shown on the form. The installer must confirm that the model number for the equipment being verified appears on this list.

Section C. Instrument Calibration

1. Enter the date of most recent Digital Refrigerant Gauge Calibration Field Check. Analog gauges are not allowed for verification purposes under the 2013 Standards. Specification for pressure gauges is found in Residential Appendix RA3.2.2.2.3. Procedures for the field check procedure are detailed in RA3.2.2.4.2. Calibration field check must happen at least once every 30 days.
2. Enter the date of the most recent Digital Thermocouple Calibration. Specifications for thermocouples and temperature sensors can be found in Residential Appendix RA3.2.2.2.2. Procedures for calibration are detailed in RA3.2.2.4.1. Calibration must happen at least once every 30 days.

For information and data collection only. Not valid until registered with a HERS Provider

3. Digital Refrigerant Gauge Calibration status will appear automatically. If the date entered in Row C01 is more than 30 days prior to date of verification this row will indicate that calibration is required and you will not be allowed to continue filling out this document.
4. Digital Thermocouple Calibration status will appear automatically. If the date entered in Row C02 is more than 30 days prior to date of verification this row will indicate that calibration is required and you will not be allowed to continue filling out this document.

Section D. Measurement Access Hole (MAH) Verification

1. Indicate the method used to demonstrate compliance with the MAH requirement by selecting the appropriate method from the drop down list. Procedures for installing MAH's are detailed in RA3.2.2.3. Selecting that the MAH cannot be installed consistent with Figure 3.2-1 may result in additional scrutiny by enforcement personnel.

Section E. Minimum System Airflow Rate Verification

1. This information is automatically calculated based on the information given in line A09. This is the target minimum system airflow required for the system being verified.
2. This information is automatically calculated based on the MCH-23 which documents the measured airflow of the system being verified. If the measured airflow is not adequate it will not comply with the airflow requirements and refrigerant charge verification cannot be performed.

Section F. Winter Setup Method – Data Collection and Calculations

1. The Winter Setup Method is a variation on the Subcooling Method and involves using a Condenser Outlet Restrictor to drive up the refrigerant pressures. The procedures for this are detailed in Residential Appendix RA1.2.2
2. Measure and record the lowest return air dry-bulb temperature that occurred during the refrigerant charge procedure, in degrees F. This temperature must remain above 70 degF during the verification procedure. This requirement is detailed in Residential Appendix RA3.2.2.5.
3. Measure and record the condenser air dry-bulb temperature ($T_{condenser}$) in degrees F. This value must be at least 37 degF and no more than 115 degF to use the Subcooling Charge Verification Method.
4. If a value less than 37 degF or greater than 115 degF is entered in Row F03 the Subcooling Method cannot be used.
5. Measure and record the liquid line temperature (T_{liquid}) in degrees F. This procedure is detailed in RA3.2.2.5. This value is used to calculate the measured subcool temperature.
6. Measure and record the liquid line pressure (P_{liquid}) in psig. This procedure is detailed in RA3.2.2.5. This value is used to determine the condenser saturation temperature ($T_{condenser,sat}$) from a pressure temperature chart for the appropriate refrigerant (can be internal to a digital gauge), which is entered into Row F07.
7. Enter the condenser saturation temperature ($T_{condenser,sat}$) from the digital gauge or a separate pressure-temperature chart that corresponds to the liquid line pressure entered in Row F06, in degrees F.

For information and data collection only. Not valid until registered with a HERS provider

8. Measured Subcooling is automatically calculated as the difference between the liquid line temperature (Row F05) and the condenser saturation temperature (Row F07)
9. Enter target subcooling from manufacturer. This may be a challenge to find for older equipment. Internet searches can sometimes result in archived equipment specifications for the equipment in question, or sometimes a very similar model. If the manufacturer's target cannot be found the Commission's Executive Director may provide additional guidance for compliance.
10. System passes Subcooling Method when Row F09 is within plus or minus 5 degrees of Row F08.

Section G. Metering Device Verification

1. Measure and record the suction line temperature ($T_{suction}$) in degrees F. This procedure is detailed in RA3.2.2.5. This value is used to calculate the measured superheat.
2. Measure and record the suction line pressure ($P_{suction}$) in psig. This procedure is detailed in RA3.2.2.5. This value is used to determine the evaporator saturation temperature ($T_{evaporator,sat}$) from a pressure temperature chart for the appropriate refrigerant (can be internal to a digital gauge), which is entered into Row G03.
3. Enter the evaporator saturation temperature ($T_{evaporator,sat}$) from the digital gauge or a separate pressure-temperature chart that corresponds to the suction line pressure entered in Row G02, in degrees F.
4. Measured superheat is automatically calculated as the difference between the suction line temperature (Row G01) and the evaporator saturation temperature (Row G03)
5. There are two possible criteria for passing. If the manufacturer's specification is known it should be used, otherwise the CEC requirement is that the superheat be between 4 and 25 degF, inclusive. This row checks the CEC requirement.
6. If the manufacturer's target superheat for ensuring proper metering device operation is known, it supersedes the CEC requirement of being between 4 and 25 degF. If "Yes, documentation to be provided upon request." is selected, the installer should be prepared to provide documentation for the target values used.
7. There are two possible criteria for passing. If the manufacturer's specification is known it should be used, otherwise the CEC requirement is that the superheat be between 4 and 25 degF, inclusive. If "Yes, documentation to be provided upon request." is selected in Row G06, the installer should be prepared to provide documentation for the target values used.

Section H. Confirmation of Refrigerant Pressure Differential

1. This field is automatically calculated base on the liquid line (high side) pressure and suction line (low side) pressure values previously entered. The protocols for the Winter Setup Method require that this pressure differential be between 160 psig and 220 psig, inclusive, for R-410a refrigerant; and between 100 psig and 145 psig, inclusive, for R-22 refrigerant. These procedures are detailed in Residential Appendix RA1.2.2.
2. This field is automatically calculated base on the liquid line (high side) pressure and suction line (low side) pressure values previously entered. The protocols for the Winter Setup Method require that this pressure differential be between 160 psig and 220 psig, inclusive, for R-410a refrigerant; and between 100 psig and 145 psig, inclusive, for R-22 refrigerant. These procedures are detailed in Residential Appendix RA1.2.2. If the pressure differential is not within the correct range, a statement will appear

For information and data collection only. Not valid until registered with a HERS provider

here that the system does not comply and the test will need to be redone using the appropriate procedures.

Section I. Verification of Charge Indicator Display

1. Enter the manufacturer name or make of the approved Charge Indicator Display. Must match name shown on the list of approved devices kept by the Commission.
2. Enter the manufacturer model number of the approved Charge Indicator Display. Must match name shown on the list of approved devices kept by the Commission.
3. The installer must confirm that the CID display module is mounted adjacent to thermostat that controls the system being verified. This requirement is detailed in Residential Appendix RA3.4.2.
4. The installer must confirm that the installed CID is approved and appears the list of approved devices kept by the Commission. This requirement is detailed in Residential Appendix RA3.4.2.
5. The installer must confirm that the system has operated for at least 15 minutes and that they system is operating within acceptable parameters as specified by the CID and equipment manufacturers. This requirement is detailed in Residential Appendix RA3.4.2.

For information and data collection only. Not valid until registered with a HERS provider

REFRIGERANT CHARGE VERIFICATION

CERTIFICATE OF INSTALLATION		CF2R-MCH-25-E
Refrigerant Charge Verification – Packaged System		(Page 1 of 2)
Project Name:	Enforcement Agency:	Permit Number:
Dwelling Address:	City	Zip Code

A. System Information

Each system requiring refrigerant charge verification will be documented on a separate certificate.

01	System Identification or Name	
02	System Location or Area Served	
03	Condenser (or package unit) make or brand	
04	Condenser (or package unit) model number	
05	Nominal Cooling Capacity (tons) of Condenser	
06	Condenser (or package unit) serial number	
07	Refrigerant Type	
08	Other Refrigerant Type (if applicable)	
09	Project Type	
10	Charge Indicator Display (CID) Status (Note: Even systems with a CID must have refrigerant charge verified by installer)	
11	Is the system of a type that the minimum airflow can be verified using an approved measurement procedure (RA3.3 or RA3.2.2.7)?	
12	Is the system of a type that approved refrigerant charge verification procedures can be used to verify compliance with the refrigerant charge verification requirements when temperatures are ≥ 55°F (RA3.2.2, or RA1)?	
13	Date of Refrigerant Charge Verification for this system	
14	Refrigerant charge verification method used.	
15	Person who performed the Refrigerant Charge Verification reported on this Certificate of Installation:	
16	HERS Verification Compliance Requirement Status	

For information and data collection only. Not valid until registered with a HERS provider

CF2R-MCH-25f – New Package Unit With Factory Charge

B. Measurement Access Hole (MAH) Verification

Procedures for installing MAH are specified in Reference Residential Appendix RA3.2.2.3

01	Method used to demonstrate compliance with the Measurement Access Hole (MAH) requirement	

CERTIFICATE OF INSTALLATION		CF2R-MCH-25-E
Refrigerant Charge Verification – Packaged System		(Page 2 of 2)
Project Name:	Enforcement Agency:	Permit Number:
Dwelling Address:	City	Zip Code

C. Minimum System Airflow Rate Verification

Procedures for verifying minimum system airflow are specified in Reference Residential Appendix RA3.2.2.7.

01	Minimum Required System Airflow Rate (cfm)	
02	System Airflow Rate Verification Status	

D. Verification of New Package Unit Factory Charge

Note: There is no HERS verification requirement for the MCH-25f . The Enforcement Agency has responsibility for verification of the MCH-25f.

01	Provide the AHRI certificate number for the installed new package unit with factory charge.	
02	The responsible person's signature on this document affirms that this new package unit has correct refrigerant charge as provided by the manufacturer prior to shipment from the factory, and no modifications have been made to this packaged unit that would result in a change to the amount of refrigerant in the unit.	

DOCUMENTATION AUTHOR'S DECLARATION STATEMENT

1. I certify that this Certificate of Installation documentation is accurate and complete.

Documentation Author Name:	Documentation Author Signature:
Documentation Author Company Name:	Date Signed:
Address:	CEA/HERS Certification Identification (If applicable):
City/State/Zip:	Phone:

RESPONSIBLE PERSON'S DECLARATION STATEMENT

I certify the following under penalty of perjury, under the laws of the State of California:

1. The information provided on this Certificate of Installation is true and correct.
2. I am eligible under Division 3 of the Business and Professions Code in the applicable classification to accept responsibility for the system design, construction, or installation of features, materials, components, or manufactured devices for the scope of work identified on this Certificate of Installation, and attest to the declarations in this statement (responsible builder/installer), otherwise I am an authorized representative of the responsible builder/installer.
3. The constructed or installed features, materials, components or manufactured devices (the installation) identified on this Certificate of Installation conforms to all applicable codes and regulations, and the installation conforms to the requirements given on the plans and specifications approved by the enforcement agency.
4. I reviewed a copy of the Certificate of Compliance approved by the enforcement agency that identifies the specific requirements for the scope of construction or installation identified on this Certificate of Installation, and I have ensured that the requirements that apply to the construction or installation have been met.
5. I will ensure that a registered copy of this Certificate of Installation shall be posted, or made available with the building permit(s) issued for the building, and made available to the enforcement agency for all applicable inspections. I understand that a registered copy of this Certificate of Installation is required to be included with the documentation the builder provides to the building owner at occupancy.

Responsible Builder/Installer Name:	Responsible Builder/Installer Signature:	
Company Name: (Installing Subcontractor or General Contractor or Builder/Owner)	Position With Company (Title):	
Address:	CSLB License:	
City/State/Zip:	Phone	Date Signed:

For information and data collection only. Not valid until registered with a HERS provider

Instructions MCH-25f:

Instructions MCH-25f:

Section A. System Information

1. This information is automatically pulled from the Certificate of Installation (MCH-01).
2. This information is automatically pulled from the Certificate of Installation (MCH-01)
3. This information is automatically pulled from the Certificate of Installation (MCH-01).
4. This information is automatically pulled from the Certificate of Installation (MCH-01)
5. This information is automatically pulled from the Certificate of Installation (MCH-01).
6. This information is automatically pulled from the Certificate of Installation (MCH-01)
7. Choose the type of refrigerant used by the system being verified.
8. If "Other" is chosen in Row A07, then indicate the type of refrigerant being used. If R-22 or R-410A is being used (regardless of trade name, Puron, Genetron, etc.) it should be indicated in Row A07. This row is only for refrigerants other than R-22 and R-410a. Documentation of refrigerant may be requested.
9. Indicate whether the HVAC system is Completely New, Replacement or an Alteration. These are defined in detail the Residential Compliance Manual.
10. Select the appropriate choice regarding whether this system has a Charge Indicator Display (CID). Qualifying CID's may exempt a system from HERS refrigerant charge verification. CID's are described in Joint Appendix JA6.1. Qualifying CID's must appear on a list of approved devices kept by the Commission.
11. Most ducted split systems and package systems are of the type that minimum airflow can be verified using an approved measurement procedure. Examples of systems that do not meet this description are ductless systems. Selecting "No" here may subject the project to additional scrutiny by enforcement personnel.
12. Most ducted split systems and package systems are of the type that approved refrigerant charge verification procedures detailed in Residential Appendix RA3.2.2 or RA1 can be used (i.e., Standard Charge Verification or Winter Setup Verification procedures). Examples of systems that may not meet this description are "mini splits" or variable refrigerant flow systems that may only be charged using weigh-in procedures. Selecting "No" here may subject the project to additional scrutiny.
13. Specify the date the refrigerant charge verification was performed.
14. Select the refrigerant charge verification method used from the choices provided:
    - Superheat (outdoor temperature must be ≥ 55 degF); This verification method can only be used when the outdoor temperature is at or above 55 degF. It is only used on systems with fixed orifice refrigerant metering devices (non-variable metering devices). This method is detailed in Reference Appendix RA3.2.2.6.1. Systems verified using this method may be eligible for HERS verification compliance using sampling. Choosing this option will generate a CF2R-MCH-25a.
    - Subcooling (outdoor temperature must be ≥ 55 degF); This verification method can only be used when the outdoor temperature is at or above 55 degF. It is only used on systems with variable metering devices (TXV or EXV). This method is detailed in Reference Appendix RA3.2.2.6.2. Systems verified using this method may be eligible for HERS verification compliance using sampling. Choosing this option will generate a CF2R-MCH-25b.
    - Weigh-in; This verification method can be used at any outdoor temperature allowed by the equipment manufacturer. This method is detailed in Reference Appendix RA3.2.3. Systems

For information and data collection only. Not valid until registered with a HERS provider

verified using this method are NOT eligible for HERS verification compliance using Group Sampling. Choosing this option will generate a CF2R-MCH-25c.

- Winter Setup (applicable when outdoor temperature is < 55 degF); The Winter Setup verification method is a special version of the Subcooling method. It can be used when the outdoor temperature is between 37 and 55 degF. It can only be used on equipment where the manufacturer has specifically approved it for the equipment being tested. The Winter Setup procedure is details in Residential Appendix RA1.2. Choosing this option will generate a CF2R-MCH-25e.
- New Package Unit Factory Charge; Choose this option when a new package unit is being installed that has an AHRI rating. This helps ensure that the unit was properly charged at the factory. HERS verification of refrigerant charge may not be required in this case. Choosing this option will generate a CF2R-MCH-25f.

15. Identify who will be performing the verification that is documented on this Certificate of Installation, select from the two options. Note that HERS verification compliance by Group Sampling requires that the installer perform their own refrigerant charge verification as part of the installation of the equipment prior to the system being put into a sample group for possible selection by a HERS rater for verification. If Group Sampling is not intended, the HERS Rater may perform the refrigerant charge verification in behalf of the Installing Contractor (applies to any method but Weigh-In) and the Rater will enter same results on both the CF2R and CF3R.
16. The Group Sampling status is automatically displayed based on the input results of Row A14 and Row A15. Group Sampling procedures are detailed Residential Appendix RA2.3.

Section B. Measurement Access Hole (MAH) Verification

1. Indicate the method used to demonstrate compliance with the MAH requirement by selecting the appropriate method from the drop down list. Procedures for installing MAH's are detailed in RA3.2.2.3. Selecting that the MAH cannot be installed consistent with Figure 3.2-1 may result in additional scrutiny by enforcement personnel.

Section C. Minimum System Airflow Rate Verification

1. This information is automatically calculated based on the information given in line A09. This is the target minimum system airflow required for the system being verified.
2. This information is automatically calculated based on either the MCH-23 which documents the measured airflow of the system being verified. If the measured airflow is not adequate it will not comply with the airflow requirements and refrigerant charge verification cannot be performed.

Section D. Verification of New Package Unit Factory Charge

1. Only AHRI certified package units can qualify for having an appropriate factory charge. Provide and accurate AHRI certificate number here and be prepared to provide supporting documentation upon request.

For information and data collection only. Not valid until registered with a HERS provider

2. By signing the Declaration Statement at the bottom of this form, the installer is declaring that the package unit was an AHRI certified unit and that no modifications were made to the unit to change the factory charge.

For information and data collection only. Not valid until registered with a HERS provider

VERIFICATION OF HIGH SEER & EER EQUIPMENT

CERTIFICATE OF INSTALLATION		CF2R-MCH-26-H
Verification of High SEER &EER Equipment		(Page 1 of 2)
Project Name:	Enforcement Agency:	Permit Number:
Dwelling Address:	City	Zip Code

Procedures for verification of High SEER and EER Equipment are described in Reference Appendix RA3.4. Each HVAC system requiring verification must use a separate form.

A. System Information		
01	System Name or Identification/Tag	
02	System Location or Area Served	
03	List AHRI certification number for the installed air conditioning equipment from http://www.ahridirectory.org	
04	Outdoor Condenser - Installed Manufacturer Name (auto filled from MECH-1)	
05	Outdoor Condenser - Installed Model Number (auto filled from MECH-1)	
06	Outdoor Condenser - Installed Serial Number (auto filled from MECH-1)	
07	Inside Coil - Installed Manufacture Name (auto filled from MECH-1)	
08	Inside Coil - Installed Model Number (auto filled from MECH-1)	
09	Inside Coil - Installed Serial Number (auto filled from MECH-1)	
10	*Air Handler/Furnace - Installed Manufacture Name (auto filled from MECH-1)*	
11	*Air Handler/Furnace - Installed Model Number (auto filled from MECH-1)*	
12	*Air Handler/Furnace - Installed Serial Number (auto filled from MECH-1)*	

B. Verified Cooling System Efficiency - SEER					
13	Required SEER from the CF1R Report. If SEER verification not required mark N/A.		☐N/A	**SEER**	
14	SEER listed on AHRI Certification (line 03)			**SEER**	
15	☐Yes	☐No	Is the AHRI certified SEER (line 14) the same or better than required by the CF1R (line 13)		
16	☐Yes	☐No	Are the Manufacturer Names and Model Numbers listed on the AHRI certification from line 03 the same as what was installed?		
17	☐Yes	☐No	Are the Manufacturer Names and Model Numbers listed on the AHRI certification from line 03 the same as what is listed on line 04, 05, 07, and 08?		
Compliance Statement					

C. Verified Cooling System Efficiency - EER					
18	Required EER from the CF1R Report. If EER verification not required mark N/A.		☐N/A	**EER**	
19	EER listed on AHRI Certification (line 03)			**EER**	
20	☐Yes	☐No	Is the AHRI certified EER (line 19) the same or better than required by the CF1R (line 18)		
21	☐Yes	☐No	Are the Manufacturer Names and Model Numbers listed on the AHRI certification from line 03 the same as what was installed?		
22	☐Yes	☐No	Are the Manufacturer Names and Model Numbers listed on the AHRI certification from line 03 the same as what is listed on line 04, 05, 07, and 08?		
Compliance Statement					

D. Verified Cooling System Efficiency - Furnace			
23	☐Yes	☐No	Is Furnace make and model Included in the AHRI certification from line 03?
24	☐Yes	☐No	Are the Manufacturer Names and Model Numbers listed on the AHRI certification from line 03 the same as what was installed?
25	☐Yes	☐No	Are the Manufacturer Names and Model Numbers listed on the AHRI certification from line 03 the same as what is listed on line 10 and 11?
Compliance Statement			

E. Verified Cooling System Efficiency - Time Delay			
26	☐Yes	☐No	Is time delay included in the AHRI certification from line 03?

For information and data collection only. Not valid until registered with a HERS provider

CERTIFICATE OF INSTALLATION		CF2R-MCH-26-H
Verification of High SEER &EER Equipment		(Page 2 of 2)
Project Name:	Enforcement Agency:	Permit Number:
Dwelling Address:	City	Zip Code

27	☐Yes	☐No	If Yes is has the time delay been tested in the field and is functioning correctly?
Compliance Statement			

F. Verified Cooling System Efficiency - TXV			
28	☐Yes	☐No	Is a TXV included in the AHRI certification from line 03?
29	☐Yes	☐No	If Yes has the TXV been installed per manufacturer instructions and the expansion valve is in full contact with suction line, is tightly installed with a metal clamp, is placed in the proper orientation and is fully covered with insulation?
Compliance Statement			

DOCUMENTATION AUTHOR'S DECLARATION STATEMENT

1. I certify that this Certificate of Installation documentation is accurate and complete.

Documentation Author Name:	Documentation Author Signature:
Documentation Author Company Name:	Date Signed:
Address:	CEA/HERS Certification Identification (If applicable):
City/State/Zip:	Phone:

RESPONSIBLE PERSON'S DECLARATION STATEMENT

I certify the following under penalty of perjury, under the laws of the State of California:

1. The information provided on this Certificate of Installation is true and correct.
2. I am eligible under Division 3 of the Business and Professions Code in the applicable classification to accept responsibility for the system design, construction, or installation of features, materials, components, or manufactured devices for the scope of work identified on this Certificate of Installation and attest to the declarations in this statement (responsible builder/installer), otherwise I am an authorized representative of the responsible builder/installer.
3. The constructed or installed features, materials, components or manufactured devices (the installation) identified on this Certificate of Installation conforms to all applicable codes and regulations, and the installation conforms to the requirements given on the plans and specifications approved by the enforcement agency.
4. I understand that a HERS rater will check the installation to verify compliance, and that if such checking identifies defects; I am required to take corrective action at my expense. I understand that Energy Commission and HERS Provider representatives will also perform quality assurance checking of installations, including those approved as part of a sample group but not checked by a HERS rater, and if those installations fail to meet the requirements of such quality assurance checking, the required corrective action and additional checking/testing of other installations in that HERS sample group will be performed at my expense.
5. I reviewed a copy of the Certificate of Compliance approved by the enforcement agency that identifies the specific requirements for the scope of construction or installation identified on this Certificate of Installation, and I have ensured that the requirements that apply to the construction or installation have been met.
6. I will ensure that a registered copy of this Certificate of Installation shall be posted, or made available with the building permit(s) issued for the building, and made available to the enforcement agency for all applicable inspections. I understand that a registered copy of this Certificate of Installation is required to be included with the documentation the builder provides to the building owner at occupancy.

Responsible Builder/Installer Name:	Responsible Builder/Installer Signature:	
Company Name: (Installing Subcontractor or General Contractor or Builder/Owner)	Position With Company (Title):	
Address:	CSLB License:	
City/State/Zip:	Phone	Date Signed:
Third Party Quality Control Program (TPQCP) Status:	Name of TPQCP (if applicable):	

For information and data collection only. Not valid until registered with a HERS provider.

User Instructions for Completing the MECH-26

A. System Information

1. System Name or Identification/Tag – Imported from the MECH-01; provide an identification name or tag name that uniquely identifies the duct system. If there is a mechanical plan for the system, the tag name may be given on the plans.
2. System Location or Area Served - Imported from the MECH-01; provide a brief description of the area served by the duct system (e.g. upstairs; downstairs).
3. List AHRI certification number for the installed cooling system from http://www.ahridirectory.org– The installer must use equipment listed with AHRI. Equipment listed under this AHRI number must be used in the installation.
4. List the installed outdoor condenser Manufacture Name. This will be auto filled from the MECH-01.
5. List the installed outdoor condenser Model Number. This will be auto filled from the MECH-01.
6. List the installed outdoor condenser Serial Number. This will be auto filled from the MECH-01.
7. List the installed indoor coil Manufacture Name. This will be auto filled from the MECH-01.
8. List the installed indoor coil Model Number. This will be auto filled from the MECH-01.
9. List the installed indoor coil Serial Number. This will be auto filled from the MECH-01.
10. List the installed air handler/furnace Manufacture Name. This will be auto filled from the MECH-01.
11. List the installed air handler/furnace coil Model Number. This will be auto filled from the MECH-01.
12. List the installed air handler/furnace Serial Number. This will be auto filled from the MECH-01.

B. Verified Cooling System Efficiency - SEER

13. Required SEER – Imported from the CF1R. If SEER verification not required by CF1R then NA will be auto filled in line 13.
14. Enter the SEER rating from the AHRI certificate from line 3.
15. The AHRI certified SEER (line 14) must be the same or better than required by the CF1R (line 13). If this is correct then mark Yes. Online form will auto fill.
16. The Manufacturer Names and Model Numbers listed on the AHRI certification from line 03 must be the same as what was installed. Mark Yes if this statement is correct.
17. The Manufacturer Names and Model Numbers listed on the AHRI certification from line 03 must be the same as what is listed on line 04, 05, 07, and 08. Mark Yes if this statement is correct.

Compliance Statement – SEER VERIFICATION NOT REQUIRED, or
- PASS if line 15, 16 and 17 are Yes, or
- If line 15, 16 or 17 is No, then installer must fix system to proceed.

C. Verified Cooling System Efficiency - EER

18. Required EER – Imported from the CF1R. If EER verification not required by CF1R then NA will be auto filled in line 18.
19. Enter the EER rating from the AHRI certificate from line 3.
20. The AHRI certified EER (line 19) must be the same or better than required by the CF1R (line 18). If this is correct then mark Yes. Online form will auto fill.
21. The Manufacturer Names and Model Numbers listed on the AHRI certification from line 03 must be the same as what was installed. Mark Yes if this statement is correct.
22. The Manufacturer Names and Model Numbers listed on the AHRI certification from line 03 must be the same as what is listed on line 04, 05, 07, and 08. Mark Yes if this statement is correct.

Compliance Statement – EER VERIFICATION NOT REQUIRED, or
- PASS if line 20, 21, and 22 is Yes, or
- If line 20, 21, or 22 is No then installer must fix system to proceed.

D. Verified Cooling System Efficiency - Furnace

23. Some AHRI certifications require the air handler/furnace to be included in the certification number. If an air handler/furnace is listed with the AHRI certification number then check the yes box. If not required check the no box.
24. The Manufacturer Names and Model Numbers listed on the AHRI certification from line 03 the same as what was installed. Mark Yes if this statement is correct.
25. The Manufacturer Names and Model Numbers listed on the AHRI certification from line 03 must be the same as what is listed on line 10, and 11. Mark Yes if this statement is correct.

Compliance Statement – FURNICE VERIFICATION NOT REQUIRED if No box checked, or
- PASS if line 24 and 25 is Yes, or
- If line 24 or 25 is No then installer must fix system to proceed.

E. Verified Cooling System Efficiency - Time Delay

For information and data collection only. Not valid until registered with a HERS provider

26. Some AHRI certifications require that a time delay be installed. If the certification from line 03 requires time delay then check the yes box. If not required check the no box.
27. If Yes in line 26 the time delay has been tested in the field and is functioning correctly? To verify the time delay is function properly the following is required.
    a. Turn the thermostat down until the compressor and indoor fan are both running.
    b. Turn the thermostat up so the compressor stops running.
    c. Verify that the indoor fan continues to run for at least 30 seconds.

Compliance Statement – TIME DELAY VERIFICATION NOT REQUIRED if No box was checked, or
- PASS if line 27 is Yes, or
- If line 27 is No then installer must fix system to proceed.

F. Verified Cooling System Efficiency - TXV

28. Some AHRI certifications require that a TXV be installed. If the certification from line 03 requires TXV then check the yes box. If not required check the no box.
29. If Yes in line 28 the TXV has been installed per manufacturer instructions and the expansion valve is in full contact with suction line, is tightly installed with a metal clamp, is placed in the proper orientation and is fully covered with insulation.

Compliance Statement – TXV NOT REQUIRED if No box was checked, or
- PASS if line 29 is Yes, or
- If line 29 is No then installer must fix system to proceed.

01 <<calculated field: reference seer requirement from the CF1R>>
02 <<calculated field: reference seer requirement from the CF1R>>

For information and data collection only. Not valid until registered with a HERS provider

INDOOR AIR QUALITY AND MECHANICAL VENTILATION

CERTIFICATE OF INSTALLATION		CF2R-MCH-27a-H
Indoor Air Quality and Mechanical Ventilation		(Page 1 of 5)
Project Name:	Enforcement Agency:	Permit Number:
Dwelling Address:	City	Zip Code

Title 24, Part 6, Section 150.0(o) **Ventilation for Indoor Air Quality.** All dwelling units shall meet the requirements of ANSI/ASHRAE Standard 62.2 Ventilation and Acceptable Indoor Air Quality in Low-Rise Residential Buildings. ***Equation and table numbering on this compliance document corresponds to the numbering for that information in the published ANSI/ASHRAE Standard 62.2-2010.***

A. Dwelling Mechanical Ventilation - General Information		
01	Building Type	
02	Conditioned floor area of dwelling unit	
03	Number of bedrooms in dwelling unit	
04	Ventilation Operation Schedule	
05	Whole-Building Ventilation Rate Calculation Method.	
06	Whole Building Ventilation System Type	
07	determine compliance method for this document; display applicable tables below; (this row not visible to user)	

27a - Continuous Ventilation Airflow - Fan Vent Rate Method

B. Whole-Building Continuous Ventilation - Fan Ventilation Rate Method - A mechanical supply system, exhaust system, or combination thereof shall provide whole-building ventilation with outdoor air each hour at no less than the rate in equation 4.1a.		
01	Required Continuous Whole-Building Ventilation Rate (Q_{fan})	
02	Installed Continuous Whole-Building Ventilation Rate	

C. Compliance Statement

For information and data collection only. Not valid until registered with a HERS provider

CERTIFICATE OF INSTALLATION		CF2R-MCH-27a-H
Indoor Air Quality and Mechanical Ventilation		(Page 2 of 5)
Project Name:	Enforcement Agency:	Permit Number:
Dwelling Address:	City	Zip Code

D. Local Mechanical Exhaust System – Fan selection and duct design criteria for compliance

Local mechanical exhaust fans shall be installed in each kitchen and bathroom. Delivered local ventilation rates:

- **All local ventilation rates have been measured using a flow hood, flow grid, or other airflow measuring device and meet the requirements of 62.2 Tables 5.1 or 5.2. OR**
- **The airflow rating at a pressure of 0.25 in. w.c. of a certified fan is assumed because the local ventilation system duct sizing meets the prescriptive requirements of 62.2 Table 5.3, or manufacturer's design criteria.**

Table 5.1
Intermittent Local Ventilation Exhaust Airflow Rates

Application	Airflow	Notes
Kitchen	100 cfm	
Bathroom	50 cfm	

Table 5.2
Continuous Local Ventilation Exhaust Airflow Rates

Application	Airflow	Notes
Kitchen	5 ACH	
Bathroom	20 cfm	

Table 5.3
Prescriptive Duct Sizing Requirements

Diameter, (in)	Flex Duct				Smooth Duct			
Fan Rating cfm @ 0.25 in. w.g.	50	80	100	125	50	80	100	125
	Maximum Allowable Duct Length (ft)							
Diameter, (in)	Flex Duct				Smooth Duct			
3	X	X	X	X	5	X	X	X
4	70	3	X	X	105	35	5	X
5	NL	70	35	20	NL	135	85	55
6	NL	NL	125	95	NL	NL	NL	145
7 and above	NL	NL	NL	NL	NL	NL	NL	NL

This table assumes no elbows. Deduct 15 ft of allowable duct length for each turn, elbow, or fitting. Interpolation and extrapolation in 62.2 Table 5.3 is not allowed. For airflow values not listed, use the next higher value. This table is not applicable for airflow > 125 cfm.
NL = no limit on duct length of this size.
X = not allowed, any length of duct of this size with assumed turns, elbows, fittings will exceed the rated pressure drop.

The responsible person's signature on this document indicates that the installation meets the applicable requirements specified in Table D – Local Mechanical Exhaust System.

For information and data collection only. Not valid until registered with a HERS provider

CERTIFICATE OF INSTALLATION		CF2R-MCH-27a-H
Indoor Air Quality and Mechanical Ventilation		(Page 3 of 5)
Project Name:	Enforcement Agency:	Permit Number:
Dwelling Address:	City	Zip Code

E. Other Requirements	
The items listed below (6.1 through 6.8) correspond to the information given in ASHRAE 62.2 Section 6 "Other Requirements". Refer also to Chapter 4.6 of the Residential Compliance Manual (Section 4.6.5) for information describing these "Other Requirements". The signature of the Responsible Person in the declaration statement below certifies that the building complies with these requirements specified in ASHRAE 62.2 Section 6.1 through 6.9 if applicable.	
01	**6.1 Transfer Air** = <<Measures shall be taken to minimize air movement across envelope components to occupiable spaces from garages, unconditioned crawl spaces, and unconditioned attics. Supply and balanced ventilation systems shall be designed and constructed to provide ventilation air directly from the outdoors>>
02	**6.2 Instructions and Labeling** = <<Information on the ventilation design and/or ventilation systems installed, instructions on their proper operation to meet the requirements of this standard, and instructions detailing any required maintenance (similar to that provided for HVAC systems) shall be provided to the owner and the occupant of the dwelling unit. Controls shall be labeled as to their function (unless that function is obvious, such as toilet exhaust fan switches). See Chapter 13 of Guideline 24[2] for information on instructions and labeling>>
03	**6.3 Cloths Dryers** = <<Clothes dryers shall be exhausted directly to the outdoors>>
04	**6.4 Combustion and solid-fuel burning appliances** = << Combustion and solid-fuel burning appliances must be provided with adequate combustion and ventilation air and vented in accordance with manufacturer's installation instructions, NFPA 54/ANSI Z223.1, National Fuel Gas Code, NFPA 31, Standard for the Installation of Oil-Burning Equipment, or NFPA 211, Standard for Chimneys, Fireplaces, Vents, and Solid-Fuel Burning Appliances, or other equivalent code acceptable to the building official. Where atmospherically vented combustion appliances or solid-fuel burning appliances are located inside the pressure boundary, the total net exhaust flow of the two largest exhaust fans (not including a summer cooling fan intended to be operated only when windows or other air inlets are open) shall not exceed 15 cfm/100 ft² (75 Lps/100 m^2) of occupiable space when in operation at full capacity. If the designed total net flow exceeds this limit, the net exhaust flow must be reduced by reducing the exhaust flow or providing compensating outdoor airflow. Atmospherically vented combustion appliances do not include direct-vent appliances.>>
05	**6.5 Garages** = <<When an occupiable space adjoins a garage, the design must prevent migration of contaminants to the adjoining occupiable space. Air seal the walls, ceilings, and floors that separate garages from occupiable space. To be considered air sealed, all joints, seams, penetrations, openings between door assemblies and their respective jambs and framing, and other sources of air leakage through wall and ceiling assemblies separating the garage from the residence and its attic area shall be caulked, gasketed, weather stripped, wrapped, or otherwise sealed to limit air movement. Doors between garages and occupiable spaces shall be gasketed or made substantially airtight with weather stripping>>
06	**6.6 Ventilation Opening Area** = <<Spaces shall have ventilation openings as listed below. Such openings shall meet the requirements of Section 6.8>>
07	**6.7 Minimum filtration** = <<Mechanical systems that supply air to an occupiable space through ductwork exceeding 10 ft (3 m) in length and through a thermal conditioning component, except evaporative coolers, shall be provided with a filter having a designated minimum efficiency of MERV 6, or better, when tested in accordance with ANSI/ASHRAE Standard 52.2, Method of Testing General Ventilation Air-Cleaning Devices for Removal Efficiency by Particle Size, or a minimum Particle Size Efficiency of 50% in the 3.0-10 µm range in accordance with AHRI Standard 680, Performance Rating of Residential Air Filter Equipment. The system shall be designed such that all recirculated and mechanically supplied outdoor air is filtered before passing through the thermal conditioning components. The filter shall be located and installed in such a manner as to facilitate access and regular service by the owner>>
08	**6.8 Air Inlets** = <<Air inlets that are part of the ventilation design shall be located a minimum of 10 ft (3 m) from known sources of contamination such as a stack, vent, exhaust hood, or vehicle exhaust. The intake shall be placed so that entering air is not obstructed by snow, plantings, or other material. Forced air inlets shall be provided with rodent/insect screens (mesh not larger than 1/2 inch)>>
09	**6.9 Carbon Monoxide Detectors** = << A carbon monoxide alarm shall be installed in each dwelling unit in accordance with NFPA 720, *Standard for the Installation of Carbon Monoxide (CO) Detection and Warning Equipment*14, and shall be consistent with requirements of applicable laws, codes, and standards.add brief description>>
The responsible person's signature on this document indicates that the installation meets the applicable requirements specified in Table E – Other Requirements.	

For information only. Data collection only. Not valid until reviewed with a HERS Provider

F. Air Moving Equipment	
The items listed below (7.1 through 7.3) correspond to the information given in ASHRAE 62.2 Section 7 "Air-Moving Equipment". Refer also to Chapter 4.6 of the Residential Compliance Manual (Section 4.6.6) for information describing these requirements in more detail. The signature of the Responsible Person in the declaration statement below certifies that the building complies with these requirements specified in ASHRAE 62.2 Section 7.1 through 7.3 if applicable.	
01	**7.1 Selection and Installation.** Ventilation devices and equipment shall be tested and listed in accordance with specific standards. Installations of systems or equipment shall be carried out in accordance with manufacturers' design requirements and installation instructions.
02	**7.2 Sound Ratings for Fans.** Ventilation fans shall be rated for sound at no less than the minimum airflow rate required by this standard, as noted below. These sound ratings shall be at a minimum of 0.1 in. w.c. (25 Pa) static pressure. 7.2.1 **Whole-Building or Continuous Ventilation Fans.** These fans shall be rated for sound at a maximum of 1.0 sone. 7.2.2 **Intermittent Local Exhaust Fans.** Fans used to comply with Section 5.2 shall be rated for sound at a maximum of 3 sone, unless their maximum rated airflow exceeds 400 cfm (200 L/s). (Some exceptions may apply.)
03	**7.3 Multibranch Exhaust Ducting.** If more than one of the exhaust fans in a dwelling unit shares a common exhaust duct, each fan shall be equipped with a back-draft damper to prevent the recirculation of exhaust air from one room to another through the exhaust ducting system.
The responsible person's signature on this document indicates that the installation meets the applicable requirements specified in Table F – Air Moving Equipment.	

G. Multifamily Buildings - Other Requirements <<only print this section if multi-family is selected in row A.1>>	
The items listed below correspond to the information given in ASHRAE 62.2 Section 8 "Multifamily Buildings". Refer also to Chapter 4.6 of the Residential Compliance Manual (Section 4.6.5) for information describing these requirements in more detail. The signature of the Responsible Person in the declaration statement below certifies that the building complies with these requirements specified in ASHRAE 62.2 Section 8, if applicable.	
01	**8.4.1 Transfer Air.** Measures shall be taken to minimize air movement across envelope components separating dwelling units, including sealing penetrations in the common walls, ceilings, and floors of each unit and by sealing vertical chases adjacent to the units. All doors between dwelling units and common hallways shall be gasketed or made substantially airtight. **8.4.1.1 Compliance.** One method of demonstrating compliance with Section 8.4.1 shall be to verify a leakage rate below a maximum of 0.2 cfm per ft^2 (100 L/s per 100 m^2) of the dwelling unit envelope area (i.e., the sum of the area of the walls between dwelling units, exterior walls, ceiling and floor) at a test pressure of 50 Pa by a blower door test. The test shall be conducted with the dwelling unit as if it were exposed to outdoor air on all sides, top, and bottom by opening doors and windows of adjacent dwelling units.
The responsible person's signature on this document indicates that the installation meets the applicable requirements specified in Table G – Multifamily Buildings	

For information and data collection only. Not valid until registered with a HERS provider

CERTIFICATE OF INSTALLATION		CF2R-MCH-27a-H
Indoor Air Quality and Mechanical Ventilation		(Page 5 of 5)
Project Name:	Enforcement Agency:	Permit Number:
Dwelling Address:	City	Zip Code

DOCUMENTATION AUTHOR'S DECLARATION STATEMENT	
1. I certify that this Certificate of Installation documentation is accurate and complete.	
Documentation Author Name:	Documentation Author Signature:
Documentation Author Company Name:	Date Signed:
Address:	CEA/HERS Certification Identification (If applicable):
City/State/Zip:	Phone:

RESPONSIBLE PERSON'S DECLARATION STATEMENT

I certify the following under penalty of perjury, under the laws of the State of California:

1. The information provided on this Certificate of Installation is true and correct.
2. I am eligible under Division 3 of the Business and Professions Code in the applicable classification to accept responsibility for the system design, construction, or installation of features, materials, components, or manufactured devices for the scope of work identified on this Certificate of Installation and attest to the declarations in this statement (responsible builder/installer), otherwise I am an authorized representative of the responsible builder/installer.
3. The constructed or installed features, materials, components or manufactured devices (the installation) identified on this Certificate of Installation conforms to all applicable codes and regulations, and the installation conforms to the requirements given on the plans and specifications approved by the enforcement agency.
4. I understand that a HERS rater will check the installation to verify compliance, and that if such checking identifies defects; I am required to take corrective action at my expense. I understand that Energy Commission and HERS Provider representatives will also perform quality assurance checking of installations, including those approved as part of a sample group but not checked by a HERS rater, and if those installations fail to meet the requirements of such quality assurance checking, the required corrective action and additional checking/testing of other installations in that HERS sample group will be performed at my expense.
5. I reviewed a copy of the Certificate of Compliance approved by the enforcement agency that identifies the specific requirements for the scope of construction or installation identified on this Certificate of Installation, and I have ensured that the requirements that apply to the construction or installation have been met.
6. I will ensure that a registered copy of this Certificate of Installation shall be posted, or made available with the building permit(s) issued for the building, and made available to the enforcement agency for all applicable inspections. I understand that a registered copy of this Certificate of Installation is required to be included with the documentation the builder provides to the building owner at occupancy.

Responsible Builder/Installer Name:	Responsible Builder/Installer Signature:	
Company Name: (Installing Subcontractor or General Contractor or Builder/Owner)	Position With Company (Title):	
Address:	CSLB License:	
City/State/Zip:	Phone	Date Signed:
Third Party Quality Control Program (TPQCP) Status:	Name of TPQCP (if applicable):	

For information and data collection only. Not valid until registered with a HERS provider

User Instructions – MCH-27a:

Section A. General Information

1 This information is automatically pulled from the CF1R Choices are “single family” and “low-rise multifamily”
2 This information is automatically pulled from the CF1R. Value to be entered in the field equals the conditioned floor area of the space, in square feet.
3 This information is automatically pulled from the CF1R. Value to be entered in the field equals the number of bedrooms in the home.
4 Select the Ventilation Operation Schedule method used from the choices provided:
- Continuous
- Intermittent

5 Select the Whole Building Ventilation Rate Calculation Method from the choices provided:
- Fan Ventilation Rate Method
- Total Ventilation Rate Method

6 Select the Whole Building Ventilation System Type from the choices provided:
- Standalone - Exhaust
- Standalone - Supply
- Standalone - Balanced

Section B. Whole Building Continuous Ventilation – Fan Ventilation Rate Method

1 This value is automatically calculated using equation 4.1a. The equation used to calculate this value in the field equals:
   a. If A.1= Single Family then [(0.01 x conditioned floor area A. 2) + 7.5(Number of bedrooms A.3 + 1)] = Continuous Whole-Building Ventilation Rate
   b. If A.1= Multifamily then [(0.03 x conditioned floor area A. 2) + 7.5(Number of bedrooms A.3 + 1)] = Continuous Whole-Building Ventilation Rate
2 User entered value equals the total mechanical ventilation in CFM

For information and data collection only. Not valid until registered with a HERS provider

INDOOR AIR QUALITY AND MECHANICAL VENTILATION

CERTIFICATE OF INSTALLATION		CF2R-MCH-27b-H
Indoor Air Quality and Mechanical Ventilation		(Page 1 of 5)
Project Name:	Enforcement Agency:	Permit Number:
Dwelling Address:	City	Zip Code

Title 24, Part 6, Section 150.0(o) **Ventilation for Indoor Air Quality.** All dwelling units shall meet the requirements of ANSI/ASHRAE Standard62.2. Ventilation and Acceptable Indoor Air Quality in Low-Rise Residential Buildings. ***Equation and table numbering on this form corresponds to the numbering for that information in the published ANSI/ASHRAE Standard 62.2-2010.***

A. Dwelling Mechanical Ventilation - General Information		
01	Building Type	
02	Conditioned floor area of dwelling unit	
03	Number of bedrooms in dwelling unit	
04	Ventilation Operation Schedule	
05	Whole-Building Ventilation Rate Calculation Method.	
06	Whole Building Ventilation System Type	
07	determine compliance method for this document; display applicable tables below; (this row not visible to user)	

27b - Continuous Ventilation Airflow – Total Ventilation Rate Method

B. Whole-Building Continuous Ventilation - Total Ventilation Rate Method - A mechanical supply system, exhaust system, or combination thereof shall provide whole-building ventilation with outdoor air each hour at no less than the rate in 62.2 equation 4.7.		
01	Total Required Ventilation rate (fan + infiltration), (Qtot)	
02	CFM50 from a registered ENV-20a-d	
03	Equivalent Leakage Area used for ventilation	
04	What is the vertical distance from the lowest above-grade floor to the highest ceiling in feet?	
05	What is the weather and shielding factor (wsf) for the city listed in 62.2 Appendix X Table X1?	
06	Normalized Leakage (NL)	
07	Ventilation provided by infiltration in (Qinf)	
08	Required Continuous Whole-Building Ventilation Rate (Q_{fan})	
09	Installed Continuous Whole-Building Ventilation Rate	

C. Compliance Statement

For information and data collection only. Not valid until registered with a HERS provider

D. Local Mechanical Exhaust System – Fan selection and duct design criteria for compliance

Local mechanical exhaust fans shall be installed in each kitchen and bathroom. *Delivered local ventilation rates:*

- *All local ventilation rates have been measured using a flow hood, flow grid, or other airflow measuring device and meet the requirements of 62.2 Tables 5.1 or 5.2. OR*
- *The airflow rating at a pressure of 0.25 in. w.c. of a certified fan is assumed because the local ventilation system duct sizing meets the prescriptive requirements of 62.2 Table 5.3, or manufacturer's design criteria.*

Table 5.1
Intermittent Local Ventilation Exhaust Airflow Rates

Application	Airflow	Notes
Kitchen	100 cfm	
Bathroom	50 cfm	

Table 5.2
Continuous Local Ventilation Exhaust Airflow Rates

Application	Airflow	Notes
Kitchen	5 ACH	
Bathroom	20 cfm	

Table 5.3
Prescriptive Duct Sizing Requirements

Diameter, (in)	Flex Duct				Smooth Duct			
Fan Rating cfm @ 0.25 in. w.g.	50	80	100	125	50	80	100	125
	Maximum Allowable Duct Length (ft)							
Diameter, (in)	Flex Duct				Smooth Duct			
3	X	X	X	X	5	X	X	X
4	70	3	X	X	105	35	5	X
5	NL	70	35	20	NL	135	85	55
6	NL	NL	125	95	NL	NL	NL	145
7 and above	NL	NL	NL	NL	NL	NL	NL	NL

This table assumes no elbows. Deduct 15 ft of allowable duct length for each turn, elbow, or fitting. Interpolation and extrapolation in 62.2 Table 5.3 is not allowed. For airflow values not listed, use the next higher value. This table is not applicable for airflow > 125 cfm.
NL = no limit on duct length of this size.
X = not allowed, any length of duct of this size with assumed turns, elbows, fittings will exceed the rated pressure drop.

The responsible person's signature on this document indicates that the installation meets the applicable requirements specified in Table D – Local Mechanical Exhaust System.

For information and data collection only. Not valid until registered with a HERS provider

E. Other Requirements	
The items listed below (6.1 through 6.8) correspond to the information given in ASHRAE 62.2 Section 6 "Other Requirements". Refer also to Chapter 4.6 of the Residential Compliance Manual (Section 4.6.5) for information describing these "Other Requirements". The signature of the Responsible Person in the declaration statement below certifies that the building complies with these requirements specified in ASHRAE 62.2 Section 6.1 through 6.9 if applicable.	
01	**6.1 Transfer Air** = <<Measures shall be taken to minimize air movement across envelope components to occupiable spaces from garages, unconditioned crawl spaces, and unconditioned attics. Supply and balanced ventilation systems shall be designed and constructed to provide ventilation air directly from the outdoors>>
02	**6.2 Instructions and Labeling** = <<Information on the ventilation design and/or ventilation systems installed, instructions on their proper operation to meet the requirements of this standard, and instructions detailing any required maintenance (similar to that provided for HVAC systems) shall be provided to the owner and the occupant of the dwelling unit. Controls shall be labeled as to their function (unless that function is obvious, such as toilet exhaust fan switches). See Chapter 13 of Guideline 24[2] for information on instructions and labeling>>
03	**6.3 Cloths Dryers** = <<Clothes dryers shall be exhausted directly to the outdoors>>
04	**6.4 Combustion and solid-fuel burning appliances** = << Combustion and solid-fuel burning appliances must be provided with adequate combustion and ventilation air and vented in accordance with manufacturer's installation instructions, NFPA 54/ANSI Z223.1, National Fuel Gas Code, NFPA 31, Standard for the Installation of Oil-Burning Equipment, or NFPA 211, Standard for Chimneys, Fireplaces, Vents, and Solid-Fuel Burning Appliances, or other equivalent code acceptable to the building official. Where atmospherically vented combustion appliances or solid-fuel burning appliances are located inside the pressure boundary, the total net exhaust flow of the two largest exhaust fans (not including a summer cooling fan intended to be operated only when windows or other air inlets are open) shall not exceed 15 cfm/100 ft² (75 Lps/100 m^2) of occupiable space when in operation at full capacity. If the designed total net flow exceeds this limit, the net exhaust flow must be reduced by reducing the exhaust flow or providing compensating outdoor airflow. Atmospherically vented combustion appliances do not include direct-vent appliances.>>
05	**6.5 Garages** = <<When an occupiable space adjoins a garage, the design must prevent migration of contaminants to the adjoining occupiable space. Air seal the walls, ceilings, and floors that separate garages from occupiable space. To be considered air sealed, all joints, seams, penetrations, openings between door assemblies and their respective jambs and framing, and other sources of air leakage through wall and ceiling assemblies separating the garage from the residence and its attic area shall be caulked, gasketed, weather stripped, wrapped, or otherwise sealed to limit air movement. Doors between garages and occupiable spaces shall be gasketed or made substantially airtight with weather stripping>>
06	**6.6 Ventilation Opening Area** = <<Spaces shall have ventilation openings as listed below. Such openings shall meet the requirements of Section 6.8>>
07	**6.7 Minimum filtration** = <<Mechanical systems that supply air to an occupiable space through ductwork exceeding 10 ft (3 m) in length and through a thermal conditioning component, except evaporative coolers, shall be provided with a filter having a designated minimum efficiency of MERV 6, or better, when tested in accordance with ANSI/ASHRAE Standard 52.2, Method of Testing General Ventilation Air-Cleaning Devices for Removal Efficiency by Particle Size, or a minimum Particle Size Efficiency of 50% in the 3.0-10 µm range in accordance with AHRI Standard 680, Performance Rating of Residential Air Filter Equipment. The system shall be designed such that all recirculated and mechanically supplied outdoor air is filtered before passing through the thermal conditioning components. The filter shall be located and installed in such a manner as to facilitate access and regular service by the owner>>
08	**6.8 Air Inlets** = <<Air inlets that are part of the ventilation design shall be located a minimum of 10 ft (3 m) from known sources of contamination such as a stack, vent, exhaust hood, or vehicle exhaust. The intake shall be placed so that entering air is not obstructed by snow, plantings, or other material. Forced air inlets shall be provided with rodent/insect screens (mesh not larger than 1/2 inch)>>
09	**6.9 Carbon Monoxide Detectors** = << A carbon monoxide alarm shall be installed in each dwelling unit in accordance with NFPA 720, *Standard for the Installation of Carbon Monoxide (CO) Detection and Warning Equipment*14, and shall be consistent with requirements of applicable laws, codes, and standards.add brief description>>
The responsible person's signature on this document indicates that the installation meets the applicable requirements specified in Table E – Other Requirements.	

For information and data collection only. Not valid until reviewed with a HERS provider.

F. Air Moving Equipment	
The items listed below (7.1 through 7.3) correspond to the information given in ASHRAE 62.2 Section 7 "Air-Moving Equipment". Refer also to Chapter 4.6 of the Residential Compliance Manual (Section 4.6.6) for information describing these requirements in more detail. The signature of the Responsible Person in the declaration statement below certifies that the building complies with these requirements specified in ASHRAE 62.2 Section 7.1 through 7.3 if applicable.	
01	**7.1 Selection and Installation.** Ventilation devices and equipment shall be tested and listed in accordance with specific standards. Installations of systems or equipment shall be carried out in accordance with manufacturers' design requirements and installation instructions.
02	**7.2 Sound Ratings for Fans.** Ventilation fans shall be rated for sound at no less than the minimum airflow rate required by this standard, as noted below. These sound ratings shall be at a minimum of 0.1 in. w.c. (25 Pa) static pressure. 7.2.1 **Whole-Building or Continuous Ventilation Fans.** These fans shall be rated for sound at a maximum of 1.0 sone. 7.2.2 **Intermittent Local Exhaust Fans.** Fans used to comply with Section 5.2 shall be rated for sound at a maximum of 3 sone, unless their maximum rated airflow exceeds 400 cfm (200 L/s). (Some exceptions may apply.)
03	**7.3 Multibranch Exhaust Ducting.** If more than one of the exhaust fans in a dwelling unit shares a common exhaust duct, each fan shall be equipped with a back-draft damper to prevent the recirculation of exhaust air from one room to another through the exhaust ducting system.
The responsible person's signature on this document indicates that the installation meets the applicable requirements specified in Table F – Air Moving Equipment.	

G. Multifamily Buildings - Other Requirements <<only print this section if multi-family is selected in row A.1>>	
The items listed below correspond to the information given in ASHRAE 62.2 Section 8 "Multifamily Buildings". Refer also to Chapter 4.6 of the Residential Compliance Manual (Section 4.6.5) for information describing these requirements in more detail. The signature of the Responsible Person in the declaration statement below certifies that the building complies with these requirements specified in ASHRAE 62.2 Section 8, if applicable.	
01	**8.4.1 Transfer Air.** Measures shall be taken to minimize air movement across envelope components separating dwelling units, including sealing penetrations in the common walls, ceilings, and floors of each unit and by sealing vertical chases adjacent to the units. All doors between dwelling units and common hallways shall be gasketed or made substantially airtight. **8.4.1.1 Compliance.** One method of demonstrating compliance with Section 8.4.1 shall be to verify a leakage rate below a maximum of 0.2 cfm per ft^2 (100 L/s per 100 m^2) of the dwelling unit envelope area (i.e., the sum of the area of the walls between dwelling units, exterior walls, ceiling and floor) at a test pressure of 50 Pa by a blower door test. The test shall be conducted with the dwelling unit as if it were exposed to outdoor air on all sides, top, and bottom by opening doors and windows of adjacent dwelling units.
The responsible person's signature on this document indicates that the installation meets the applicable requirements specified in Table G – Multifamily Buildings	

For information and data collection only. Not valid until registered with a HERS provider.

CERTIFICATE OF INSTALLATION		CF2R-MCH-27b-H
Indoor Air Quality and Mechanical Ventilation		(Page 5 of 5)
Project Name:	Enforcement Agency:	Permit Number:
Dwelling Address:	City	Zip Code

DOCUMENTATION AUTHOR'S DECLARATION STATEMENT	
1. I certify that this Certificate of Installation documentation is accurate and complete.	
Documentation Author Name:	Documentation Author Signature:
Documentation Author Company Name:	Date Signed:
Address:	CEA/HERS Certification Identification (If applicable):
City/State/Zip:	Phone:

RESPONSIBLE PERSON'S DECLARATION STATEMENT

I certify the following under penalty of perjury, under the laws of the State of California:

1. The information provided on this Certificate of Installation is true and correct.
2. I am eligible under Division 3 of the Business and Professions Code in the applicable classification to accept responsibility for the system design, construction, or installation of features, materials, components, or manufactured devices for the scope of work identified on this Certificate of Installation and attest to the declarations in this statement (responsible builder/installer), otherwise I am an authorized representative of the responsible builder/installer.
3. The constructed or installed features, materials, components or manufactured devices (the installation) identified on this Certificate of Installation conforms to all applicable codes and regulations, and the installation conforms to the requirements given on the plans and specifications approved by the enforcement agency.
4. I understand that a HERS rater will check the installation to verify compliance, and that if such checking identifies defects; I am required to take corrective action at my expense. I understand that Energy Commission and HERS Provider representatives will also perform quality assurance checking of installations, including those approved as part of a sample group but not checked by a HERS rater, and if those installations fail to meet the requirements of such quality assurance checking, the required corrective action and additional checking/testing of other installations in that HERS sample group will be performed at my expense.
5. I reviewed a copy of the Certificate of Compliance approved by the enforcement agency that identifies the specific requirements for the scope of construction or installation identified on this Certificate of Installation, and I have ensured that the requirements that apply to the construction or installation have been met.
6. I will ensure that a registered copy of this Certificate of Installation shall be posted, or made available with the building permit(s) issued for the building, and made available to the enforcement agency for all applicable inspections. I understand that a registered copy of this Certificate of Installation is required to be included with the documentation the builder provides to the building owner at occupancy.

Responsible Builder/Installer Name:	Responsible Builder/Installer Signature:	
Company Name: (Installing Subcontractor or General Contractor or Builder/Owner)	Position With Company (Title):	
Address:	CSLB License:	
City/State/Zip:	Phone	Date Signed:
Third Party Quality Control Program (TPQCP) Status:	Name of TPQCP (if applicable):	

For information and data collection only. Not valid until registered with a HERS provider

User Instructions – MCH-27b:

Section A. General Information

1 This information is automatically pulled from the CF1R Choices are “single family” and “low-rise multifamily”
2 This information is automatically pulled from the CF1R. Value to be entered in the field equals the conditioned floor area of the space, in square feet.
3 This information is automatically pulled from the CF1R. Value to be entered in the field equals the number of bedrooms in the home.
4 Select the Ventilation Operation Schedule method used from the choices provided:
- Continuous
- Intermittent

5 Select the Whole Building Ventilation Rate Calculation Method from the choices provided:
- Fan Ventilation Rate Method
- Total Ventilation Rate Method

6 Select the Whole Building Ventilation System Type from the choices provided:
- Standalone - Exhaust
- Standalone - Supply
- Standalone - Balanced
- Central Fan Integrated (CFI)

Section B. Whole Building Continuous Ventilation – Total Ventilation Rate Method

1 This value is automatically calculated using 62.2 equation 4.2a. The equation used to calculate this value in the field equals:
   a. If A01= Single Family then [(0.03 x conditioned floor area A02) + 7.5(Number of bedrooms A03 + 1)] = Required Continuous Whole-Building Ventilation Rate
   b. If A01= Multifamily then [(0.05 x conditioned floor area A02) + 7.5(Number of bedrooms A03 + 1)] = Required Continuous Whole-Building Ventilation Rate
2 This information is automatically pulled from the registered ENV-20a-d row A02
3 This value is automatically calculated. The equation used to calculate this value in the field equals: (CFM50 B02 x 0.055)= Equivalent Leakage Area (ELA)
4 User entered value equals the vertical distance from the lowest above-grade floor to the highest ceiling in feet
5 User entered value equals the Weather Shielding Factor (wsf) from 62.2 Appendix X Table X1.
6 This value is automatically calculated using 62.2 equation 4.5. The equation used to calculate this value in the field equals: [1000 x (Equivalent Leakage Area (ELA) row B02/ conditioned floor area A02) x (Vertical Distance B04/8.2)^0.4]= Normalized Leakage (NL)
7 This value is automatically calculated using 62.2 equation 4.6a. The equation used to calculate this value in the field equals: (Normalized Leakage (NL) row B06 x conditioned floor area A02)/7.3= Ventilation Provided by Ventilation
8 This value is automatically calculated using 62.2 equation 4.6a. The equation used to calculate this value in the field equals: (Normalized Leakage (NL) row B06 x conditioned floor area A02)/7.3= Ventilation Provided by Infiltration in (CFM)
9 This value is automatically calculated using 62.2 equation 4.7. The equation used to calculate this value in the field equals: (Required Continuous Whole-Building Ventilation Rate row B01 - Ventilation Provided by Infiltration row B08 = Required Continuous Whole-Building Ventilation Rate in (CFM)
10 User entered value equals the installed ventilation rate in (CFM)

For information and data collection only. Not actual until registered with a HERS provider

DOCUMENTATION AUTHOR'S DECLARATION STATEMENT

1. I certify that this Certificate of Installation documentation is accurate and complete.

Documentation Author Name:	Documentation Author Signature:
Documentation Author Company Name:	Date Signed:
Address:	CEA/CEPE/HERS certification identification (If applicable):
City/State/Zip:	Phone:

RESPONSIBLE PERSON'S DECLARATION STATEMENT

I certify the following under penalty of perjury, under the laws of the State of California:

1. The information provided on this Certificate of Installation is true and correct.
2. I am eligible under Division 3 of the Business and Professions Code to accept responsibility for the scope of construction or installation, in the applicable classification, for the scope of work specified on this Certificate of Installation (responsible builder/installer), otherwise I am an authorized representative of the responsible builder/installer.
3. The constructed or installed features, materials, components or manufactured devices (the installation) identified on this Certificate of Installation conforms to all applicable codes and regulations, and the installation conforms to the requirements given on the plans and specifications approved by the enforcement agency.
4. I understand that a HERS rater will check the installation to verify compliance, and that if such checking identifies defects; I am required to take corrective action at my expense. I understand that Energy Commission and HERS Provider representatives will also perform quality assurance checking of installations, including those approved as part of a sample group but not checked by a HERS rater, and if those installations fail to meet the requirements of such quality assurance checking, the required corrective action and additional checking/testing of other installations in that HERS sample group will be performed at my expense.
5. I reviewed a copy of the Certificate of Compliance approved by the enforcement agency that identifies the specific requirements for the scope of construction or installation identified on this Certificate of Installation, and I have ensured that the requirements that apply to the construction or installation have been met.
6. I will ensure that a registered copy of this Certificate of Installation shall be posted, or made available with the building permit(s) issued for the building, and made available to the enforcement agency for all applicable inspections. I understand that a registered copy of this Certificate of Installation is required to be included with the documentation the builder provides to the building owner at occupancy.

Responsible Builder/Installer Name:	Responsible Builder/Installer Signature:	
Company Name: (Installing Subcontractor or General Contractor or Builder/Owner)	Position With Company (Title):	
Address:	CSLB License:	
City/State/Zip:	Phone	Date Signed:
Third Party Quality Control Program (TPQCP) Status:	Name of TPQCP (if applicable):	

For information and data collection only. Not valid until registered with a HERS provider

CERTIFICATE OF INSTALLATION		CF2R-MCH-27c-H
Indoor Air Quality and Mechanical Ventilation		(Page 1 of 4)
Project Name:	Enforcement Agency:	Permit Number:
Dwelling Address:	City	Zip Code

Title 24, Part 6, Section 150.0(o) **Ventilation for Indoor Air Quality.** All dwelling units shall meet the requirements of ANSI/ASHRAE Standard62.2. Ventilation and Acceptable Indoor Air Quality in Low-Rise Residential Buildings. ***Equation and table numbering on this form corresponds to the numbering for that information in the published ANSI/ASHRAE Standard 62.2-2010.***

A. Dwelling Mechanical Ventilation - General Information		
01	Building Type	
02	Conditioned floor area of dwelling unit	
03	Number of bedrooms in dwelling unit	
04	Ventilation Operation Schedule	
05	Whole-Building Ventilation Rate Calculation Method.	
06	Whole Building Ventilation System Type	
07	determine compliance method for this document; display applicable tables below; (this row not visible to user)	

27c - Intermittent Ventilation Airflow - Fan Vent Rate Method

B. Whole-Building Continuous Ventilation - Fan Ventilation Rate Method - A mechanical supply system, exhaust system, or combination thereof shall provide whole-building ventilation with outdoor air each hour at no less than the rate in 62.2 equation 4.1a.		
01	Required Continuous Whole-Building Ventilation Rate (Q_{fan})	

C. Intermittent Ventilation: The effective ventilation rate of an **intermittent** system is the combination of its delivered capacity, its fractional on-time, cycle time, and the ventilation effectiveness from Table 4.2. <<This section is only printed if an intermittent strategy is chosen in row 1>>		
01	In a single on off cycle, what is the ON time in hours?	
02	In a single on off cycle, what is the OFF time in hours?	
03	System must operate at least once every 24 hours. (Row 6 + Row 7 must be less than or equal to 24 hours)	
04	Daily fractional on time (*f* used in Table 4.2).	
05	System must operate at least 10% of the time.	
06	Turnover (N used in Table 4.2)	
07	Ventilation effectiveness (e, from Table 4.2)	
08	Intermittent ventilation rate	
09	Installed Intermittent ventilation Rate	

D. Compliance Statement

For input/output and data collection only. Not valid until registered with a HERS provider

E. Local Mechanical Exhaust System – Fan selection and duct design criteria for compliance

Local mechanical exhaust fans shall be installed in each kitchen and bathroom. Delivered local ventilation rates:

- **All local ventilation rates have been measured using a flow hood, flow grid, or other airflow measuring device and meet the requirements of 62.2 Tables 5.1 or 5.2. OR**
- **The airflow rating at a pressure of 0.25 in. w.c. of a certified fan is assumed because the local ventilation system duct sizing meets the prescriptive requirements of 62.2 Table 5.3, or manufacturer's design criteria.**

Table 5.1
Intermittent Local Ventilation Exhaust Airflow Rates

Application	Airflow	Notes
Kitchen	100 cfm	
Bathroom	50 cfm	

Table 5.2
Continuous Local Ventilation Exhaust Airflow Rates

Application	Airflow	Notes
Kitchen	5 ACH	
Bathroom	20 cfm	

Table 5.3
Prescriptive Duct Sizing Requirements

Diameter, (in)	Flex Duct				Smooth Duct			
Fan Rating cfm @ 0.25 in. w.g.	50	80	100	125	50	80	100	125
	Maximum Allowable Duct Length (ft)							
Diameter, (in)	Flex Duct				Smooth Duct			
3	X	X	X	X	5	X	X	X
4	70	3	X	X	105	35	5	X
5	NL	70	35	20	NL	135	85	55
6	NL	NL	125	95	NL	NL	NL	145
7 and above	NL	NL	NL	NL	NL	NL	NL	NL

This table assumes no elbows. Deduct 15 ft of allowable duct length for each turn, elbow, or fitting. Interpolation and extrapolation in 62.2 Table 5.3 is not allowed. For airflow values not listed, use the next higher value. This table is not applicable for airflow > 125 cfm.
NL = no limit on duct length of this size.
X = not allowed, any length of duct of this size with assumed turns, elbows, fittings will exceed the rated pressure drop.

The responsible person's signature on this document indicates that the installation meets the applicable requirements specified in Table D – Local Mechanical Exhaust System.

For information and data collection only. Not valid until registered with a HERS provider

CERTIFICATE OF INSTALLATION		CF2R-MCH-27c-H
Indoor Air Quality and Mechanical Ventilation		(Page 3 of 4)
Project Name:	Enforcement Agency:	Permit Number:
Dwelling Address:	City	Zip Code

F. Other Requirements	
The items listed below (6.1 through 6.8) correspond to the information given in ASHRAE 62.2 Section 6 "Other Requirements". Refer also to Chapter 4.6 of the Residential Compliance Manual (Section 4.6.5) for information describing these "Other Requirements". The signature of the Responsible Person in the declaration statement below certifies that the building complies with these requirements specified in ASHRAE 62.2 Section 6.1 through 6.9 if applicable.	
01	**6.1 Transfer Air** = <<Measures shall be taken to minimize air movement across envelope components to occupiable spaces from garages, unconditioned crawl spaces, and unconditioned attics. Supply and balanced ventilation systems shall be designed and constructed to provide ventilation air directly from the outdoors>>
02	**6.2 Instructions and Labeling** = <<Information on the ventilation design and/or ventilation systems installed, instructions on their proper operation to meet the requirements of this standard, and instructions detailing any required maintenance (similar to that provided for HVAC systems) shall be provided to the owner and the occupant of the dwelling unit. Controls shall be labeled as to their function (unless that function is obvious, such as toilet exhaust fan switches). See Chapter 13 of Guideline 24[2] for information on instructions and labeling>>
03	**6.3 Cloths Dryers** = <<Clothes dryers shall be exhausted directly to the outdoors>>
04	**6.4 Combustion and solid-fuel burning appliances** = << Combustion and solid-fuel burning appliances must be provided with adequate combustion and ventilation air and vented in accordance with manufacturer's installation instructions, NFPA 54/ANSI Z223.1, National Fuel Gas Code, NFPA 31, Standard for the Installation of Oil-Burning Equipment, or NFPA 211, Standard for Chimneys, Fireplaces, Vents, and Solid-Fuel Burning Appliances, or other equivalent code acceptable to the building official. Where atmospherically vented combustion appliances or solid-fuel burning appliances are located inside the pressure boundary, the total net exhaust flow of the two largest exhaust fans (not including a summer cooling fan intended to be operated only when windows or other air inlets are open) shall not exceed 15 cfm/100 ft² (75 Lps/100 m^2) of occupiable space when in operation at full capacity. If the designed total net flow exceeds this limit, the net exhaust flow must be reduced by reducing the exhaust flow or providing compensating outdoor airflow. Atmospherically vented combustion appliances do not include direct-vent appliances.>>
05	**6.5 Garages** = <<When an occupiable space adjoins a garage, the design must prevent migration of contaminants to the adjoining occupiable space. Air seal the walls, ceilings, and floors that separate garages from occupiable space. To be considered air sealed, all joints, seams, penetrations, openings between door assemblies and their respective jambs and framing, and other sources of air leakage through wall and ceiling assemblies separating the garage from the residence and its attic area shall be caulked, gasketed, weather stripped, wrapped, or otherwise sealed to limit air movement. Doors between garages and occupiable spaces shall be gasketed or made substantially airtight with weather stripping>>
06	**6.6 Ventilation Opening Area** = <<Spaces shall have ventilation openings as listed below. Such openings shall meet the requirements of Section 6.8>>
07	**6.7 Minimum filtration** = <<Mechanical systems that supply air to an occupiable space through ductwork exceeding 10 ft (3 m) in length and through a thermal conditioning component, except evaporative coolers, shall be provided with a filter having a designated minimum efficiency of MERV 6, or better, when tested in accordance with ANSI/ASHRAE Standard 52.2, Method of Testing General Ventilation Air-Cleaning Devices for Removal Efficiency by Particle Size, or a minimum Particle Size Efficiency of 50% in the 3.0-10 µm range in accordance with AHRI Standard 680, Performance Rating of Residential Air Filter Equipment. The system shall be designed such that all recirculated and mechanically supplied outdoor air is filtered before passing through the thermal conditioning components. The filter shall be located and installed in such a manner as to facilitate access and regular service by the owner>>
08	**6.8 Air Inlets** = <<Air inlets that are part of the ventilation design shall be located a minimum of 10 ft (3 m) from known sources of contamination such as a stack, vent, exhaust hood, or vehicle exhaust. The intake shall be placed so that entering air is not obstructed by snow, plantings, or other material. Forced air inlets shall be provided with rodent/insect screens (mesh not larger than 1/2 inch)>>
09	**6.9 Carbon Monoxide Detectors** = << A carbon monoxide alarm shall be installed in each dwelling unit in accordance with NFPA 720, *Standard for the Installation of Carbon Monoxide (CO) Detection and Warning Equipment*14, and shall be consistent with requirements of applicable laws, codes, and standards.add brief description>>
The responsible person's signature on this document indicates that the installation meets the applicable requirements specified in Table E – Other Requirements.	

For information and data collection only. Not valid until registered with a HERS provider.

CERTIFICATE OF INSTALLATION		CF2R-MCH-27c-H
Indoor Air Quality and Mechanical Ventilation		(Page 4 of 4)
Project Name:	Enforcement Agency:	Permit Number:
Dwelling Address:	City	Zip Code

G. Air Moving Equipment	
The items listed below (7.1 through 7.3) correspond to the information given in ASHRAE 62.2 Section 7 "Air-Moving Equipment". Refer also to Chapter 4.6 of the Residential Compliance Manual (Section 4.6.6) for information describing these requirements in more detail. The signature of the Responsible Person in the declaration statement below certifies that the building complies with these requirements specified in ASHRAE 62.2 Section 7.1 through 7.3 if applicable.	
01	**7.1 Selection and Installation.** Ventilation devices and equipment shall be tested and listed in accordance with specific standards. Installations of systems or equipment shall be carried out in accordance with manufacturers' design requirements and installation instructions.
02	**7.2 Sound Ratings for Fans.** Ventilation fans shall be rated for sound at no less than the minimum airflow rate required by this standard, as noted below. These sound ratings shall be at a minimum of 0.1 in. w.c. (25 Pa) static pressure. 7.2.1 **Whole-Building or Continuous Ventilation Fans.** These fans shall be rated for sound at a maximum of 1.0 sone. 7.2.2 **Intermittent Local Exhaust Fans.** Fans used to comply with Section 5.2 shall be rated for sound at a maximum of 3 sone, unless their maximum rated airflow exceeds 400 cfm (200 L/s). (Some exceptions may apply.)
03	**7.3 Multibranch Exhaust Ducting.** If more than one of the exhaust fans in a dwelling unit shares a common exhaust duct, each fan shall be equipped with a back-draft damper to prevent the recirculation of exhaust air from one room to another through the exhaust ducting system.
The responsible person's signature on this document indicates that the installation meets the applicable requirements specified in Table F – Air Moving Equipment.	

H. Multifamily Buildings - Other Requirements <<only print this section if multi-family is selected in row A.1>>	
The items listed below correspond to the information given in ASHRAE 62.2 Section 8 "Multifamily Buildings". Refer also to Chapter 4.6 of the Residential Compliance Manual (Section 4.6.5) for information describing these requirements in more detail. The signature of the Responsible Person in the declaration statement below certifies that the building complies with these requirements specified in ASHRAE 62.2 Section 8, if applicable.	
01	**8.4.1 Transfer Air.** Measures shall be taken to minimize air movement across envelope components separating dwelling units, including sealing penetrations in the common walls, ceilings, and floors of each unit and by sealing vertical chases adjacent to the units. All doors between dwelling units and common hallways shall be gasketed or made substantially airtight. **8.4.1.1 Compliance.** One method of demonstrating compliance with Section 8.4.1 shall be to verify a leakage rate below a maximum of 0.2 cfm per ft^2 (100 L/s per 100 m^2) of the dwelling unit envelope area (i.e., the sum of the area of the walls between dwelling units, exterior walls, ceiling and floor) at a test pressure of 50 Pa by a blower door test. The test shall be conducted with the dwelling unit as if it were exposed to outdoor air on all sides, top, and bottom by opening doors and windows of adjacent dwelling units.
The responsible person's signature on this document indicates that the installation meets the applicable requirements specified in Table G – Multifamily Buildings	

For information and data collection only. Not valid until registered with a HERS provider

CERTIFICATE OF INSTALLATION		CF2R-MCH-27c-H
Indoor Air Quality and Mechanical Ventilation		(Page 5 of 4)
Project Name:	Enforcement Agency:	Permit Number:
Dwelling Address:	City	Zip Code

DOCUMENTATION AUTHOR'S DECLARATION STATEMENT	
1. I certify that this Certificate of Installation documentation is accurate and complete.	
Documentation Author Name:	Documentation Author Signature:
Documentation Author Company Name:	Date Signed:
Address:	CEA/HERS Certification Identification (If applicable):
City/State/Zip:	Phone:

RESPONSIBLE PERSON'S DECLARATION STATEMENT

I certify the following under penalty of perjury, under the laws of the State of California:

1. The information provided on this Certificate of Installation is true and correct.
2. I am eligible under Division 3 of the Business and Professions Code in the applicable classification to accept responsibility for the system design, construction, or installation of features, materials, components, or manufactured devices for the scope of work identified on this Certificate of Installation and attest to the declarations in this statement (responsible builder/installer), otherwise I am an authorized representative of the responsible builder/installer.
3. The constructed or installed features, materials, components or manufactured devices (the installation) identified on this Certificate of Installation conforms to all applicable codes and regulations, and the installation conforms to the requirements given on the plans and specifications approved by the enforcement agency.
4. I understand that a HERS rater will check the installation to verify compliance, and that if such checking identifies defects; I am required to take corrective action at my expense. I understand that Energy Commission and HERS Provider representatives will also perform quality assurance checking of installations, including those approved as part of a sample group but not checked by a HERS rater, and if those installations fail to meet the requirements of such quality assurance checking, the required corrective action and additional checking/testing of other installations in that HERS sample group will be performed at my expense.
5. I reviewed a copy of the Certificate of Compliance approved by the enforcement agency that identifies the specific requirements for the scope of construction or installation identified on this Certificate of Installation, and I have ensured that the requirements that apply to the construction or installation have been met.
6. I will ensure that a registered copy of this Certificate of Installation shall be posted, or made available with the building permit(s) issued for the building, and made available to the enforcement agency for all applicable inspections. I understand that a registered copy of this Certificate of Installation is required to be included with the documentation the builder provides to the building owner at occupancy.

Responsible Builder/Installer Name:	Responsible Builder/Installer Signature:	
Company Name: (Installing Subcontractor or General Contractor or Builder/Owner)	Position With Company (Title):	
Address:	CSLB License:	
City/State/Zip:	Phone	Date Signed:
Third Party Quality Control Program (TPQCP) Status:	Name of TPQCP (if applicable):	

For information and data collection only. Not valid until registered with a HERS provider.

User Instructions – MCH-27c:

Section A. General Information

1 This information is automatically pulled from the CF1R Choices are "single family" and "low-rise multifamily"
2 This information is automatically pulled from the CF1R. Value to be entered in the field equals the conditioned floor area of the space, in square feet.
3 This information is automatically pulled from the CF1R. Value to be entered in the field equals the number of bedrooms in the home.
4 Select the Ventilation Operation Schedule method used from the choices provided:
- Continuous
- Intermittent

5 Select the Whole Building Ventilation Rate Calculation Method from the choices provided:
- Fan Ventilation Rate Method
- Total Ventilation Rate Method

6 Select the Whole Building Ventilation System Type from the choices provided:
- Standalone - Exhaust
- Standalone - Supply
- Standalone - Balanced

Section B. Whole Building Continuous Ventilation – Fan Ventilation Rate Method

1 This value is automatically calculated using equation 4.1a. The equation used to calculate this value in the field equals:
   a. If A01= Single Family then [(0.01 x conditioned floor area A02) + 7.5(Number of bedrooms A03 + 1)] = Continuous Whole-Building Ventilation Rate
   b. If A01= Multifamily then [(0.03 x conditioned floor area A02) + 7.5(Number of bedrooms A03 + 1)] = Continuous Whole-Building Ventilation Rate

Section C. Intermittent Ventilation

1 Intermittent ventilation requires controls that ensure a regular operating schedule every 24 hours. Within a 24 hour period there will be one or more regular on off cycles. For a single on off cycle, enter the on time in hours. This value will be verified by a HERS rater.
2 Intermittent ventilation requires controls that ensure a regular operating schedule every 24 hours. Within a 24 hour period there will be one or more regular on off cycles. For a single on off cycle, enter the off time in hours. This value will be verified by a HERS rater.
3 This row performs an automatic check. The intermittent ventilation system must operate at least once every 24 hours. For this to occur, the on time plus the off time in a single on off cycle must be less than 24 hours. If this is true, "OK" will appear. If this is not true, an error will appear here and correct values will need to be entered into Rows C01 and C02. The equation used to calculate this value in the field equals: Time on in hours row C01 + Time off in hours row C02.
4 This value is automatically calculated. It is the daily fractional on time (*f*) used in 62.2 Table 4.2. A value of 0.60 means that in a 24 hour period the fan will run 60% of the time. The equation used to calculate this value in the field equals: On time in Hours row C01/(On time in Hours row C01 + Off time in Hours row C02)= Daily fractional on time
5 This row performs an automatic check. The ventilation system must operate at least 10% of the time. Row C04 must be greater than or equal to 0.10. If this is true, "OK" will appear. If this is not true, an error message will appear here and correct values will need to be entered into Rows C01 and C02.
6 This value is automatically calculated. It is the turnover (N) used in 62.2 Table 4.2. The equation used to calculate this value in the field equals: [12.8 x Continuous Whole-Building Ventilation Rate row B01 x (On time in Hours row C01 + Off time in Hours row C02)]/ Conditioned floor area of dwelling unit row A02= Turnover N
7 User entered value use the daily fractional time (*f*) from Row C04 and the turnover (N) from Row C06 to determine the ventilation effectiveness value (e) from 62.2 table 4.2.
8 This value is automatically calculated using 62.2 equation 4.8. It represents the required airflow in cfm that must be delivered during the ventilation system on times. This value will be verified by a HERS rater. The equation used to calculate this value in the field equals: Continuous Whole-Building Ventilation Rate row B01/(Daily fractional on time row C04 x ventilation effectiveness value row C07= required Intermittent ventilation rate
9 User entered value equals the installed intermittent ventilation rate in (CFM)

For information and data collection only. Not valid until registered with a HERS provider

DOCUMENTATION AUTHOR'S DECLARATION STATEMENT

1. I certify that this Certificate of Installation documentation is accurate and complete.

Documentation Author Name:	Documentation Author Signature:
Documentation Author Company Name:	Date Signed:
Address:	CEA/HERS Certification Identification (If applicable):
City/State/Zip:	Phone:

RESPONSIBLE PERSON'S DECLARATION STATEMENT

I certify the following under penalty of perjury, under the laws of the State of California:

1. The information provided on this Certificate of Installation is true and correct.
2. I am eligible under Division 3 of the Business and Professions Code in the applicable classification to accept responsibility for the system design, construction, or installation of features, materials, components, or manufactured devices for the scope of work identified on this Certificate of Installation and attest to the declarations in this statement (responsible builder/installer), otherwise I am an authorized representative of the responsible builder/installer.
3. The constructed or installed features, materials, components or manufactured devices (the installation) identified on this Certificate of Installation conforms to all applicable codes and regulations, and the installation conforms to the requirements given on the plans and specifications approved by the enforcement agency.
4. I understand that a HERS rater will check the installation to verify compliance, and that if such checking identifies defects; I am required to take corrective action at my expense. I understand that Energy Commission and HERS Provider representatives will also perform quality assurance checking of installations, including those approved as part of a sample group but not checked by a HERS rater, and if those installations fail to meet the requirements of such quality assurance checking, the required corrective action and additional checking/testing of other installations in that HERS sample group will be performed at my expense.
5. I reviewed a copy of the Certificate of Compliance approved by the enforcement agency that identifies the specific requirements for the scope of construction or installation identified on this Certificate of Installation, and I have ensured that the requirements that apply to the construction or installation have been met.
6. I will ensure that a registered copy of this Certificate of Installation shall be posted, or made available with the building permit(s) issued for the building, and made available to the enforcement agency for all applicable inspections. I understand that a registered copy of this Certificate of Installation is required to be included with the documentation the builder provides to the building owner at occupancy.

Responsible Builder/Installer Name:	Responsible Builder/Installer Signature:	
Company Name: (Installing Subcontractor or General Contractor or Builder/Owner)	Position With Company (Title):	
Address:	CSLB License:	
City/State/Zip:	Phone	Date Signed:
Third Party Quality Control Program (TPQCP) Status:	Name of TPQCP (if applicable):	

For information and data collection only. Not valid until registered with a HERS provider

INDOOR AIR QUALITY AND MECHANICAL VENTILATION

CERTIFICATE OF INSTALLATION		CF2R-MCH-27-H
Indoor Air Quality and Mechanical Ventilation		(Page 1 of 5)
Project Name:	Enforcement Agency:	Permit Number:
Dwelling Address:	City	Zip Code

Title 24, Part 6, Section 150.0(o) **Ventilation for Indoor Air Quality.** All dwelling units shall meet the requirements of ANSI/ASHRAE Standard62.2. Ventilation and Acceptable Indoor Air Quality in Low-Rise Residential Buildings. ***Equation and table numbering on this form corresponds to the numbering for that information in the published ANSI/ASHRAE Standard 62.2-2010.***

A. Dwelling Mechanical Ventilation - General Information		
01	Building Type	
02	Conditioned floor area of dwelling unit	
03	Number of bedrooms in dwelling unit	
04	Ventilation Operation Schedule	
05	Whole-Building Ventilation Rate Calculation Method.	
06	Whole Building Ventilation System Type	
07	determine compliance method for this document; display applicable tables below; (this row not visible to user)	

27d - Intermittent Ventilation Airflow – Total Vent Rate Method

B. Whole-Building Continuous Ventilation - Total Ventilation Rate Method - A mechanical supply system, exhaust system, or combination thereof shall provide whole-building ventilation with outdoor air each hour at no less than the rate in 62.2 equation 4.7.		
01	Total Required Ventilation rate (fan + infiltration), (Qtot)	
02	CFM50 from a registered ENV-20a-d	
03	Equivalent Leakage Area used for ventilation	
04	What is the vertical distance from the lowest above-grade floor to the highest ceiling in feet?	
05	What is the weather and shielding factor (wsf) for the city listed in 62.2 Appendix X Table X1?	
06	Normalized Leakage (NL)	
07	Ventilation provided by infiltration in (Qinf)	
08	Required Continuous Whole-Building Ventilation Rate (Q_{fan})	

C. Intermittent Ventilation: The effective ventilation rate of an **intermittent** system is the combination of its delivered capacity, its fractional on-time, cycle time, and the ventilation effectiveness from Table 4.2. <<This section is only printed if an intermittent strategy is chosen in row 1>>		
01	In a single on off cycle, what is the ON time in hours?	
02	In a single on off cycle, what is the OFF time in hours?	
03	System must operate at least once every 24 hours. (Row 6 + Row 7 must be less than or equal to 24 hours)	
04	Daily fractional on time (*f* used in Table 4.2).	
05	System must operate at least 10% of the time.	
06	Turnover (N used in Table 4.2)	
07	Ventilation effectiveness (e, from Table 4.2)	
08	Intermittent ventilation rate	
09	Installed Intermittent ventilation Rate	

D. Compliance Statement

For information and data collection only. Not valid until registered with a HERS provider

CERTIFICATE OF INSTALLATION		CF2R-MCH-27-H
Indoor Air Quality and Mechanical Ventilation		(Page 2 of 5)
Project Name:	Enforcement Agency:	Permit Number:
Dwelling Address:	City	Zip Code

E. Local Mechanical Exhaust System – Fan selection and duct design criteria for compliance

Local mechanical exhaust fans shall be installed in each kitchen and bathroom. Delivered local ventilation rates:

- **All local ventilation rates have been measured using a flow hood, flow grid, or other airflow measuring device and meet the requirements of 62.2 Tables 5.1 or 5.2. OR**
- **The airflow rating at a pressure of 0.25 in. w.c. of a certified fan is assumed because the local ventilation system duct sizing meets the prescriptive requirements of 62.2 Table 5.3, or manufacturer's design criteria.**

Table 5.1
Intermittent Local Ventilation Exhaust Airflow Rates

Application	Airflow	Notes
Kitchen	100 cfm	
Bathroom	50 cfm	

Table 5.2
Continuous Local Ventilation Exhaust Airflow Rates

Application	Airflow	Notes
Kitchen	5 ACH	
Bathroom	20 cfm	

Table 5.3
Prescriptive Duct Sizing Requirements

Diameter, (in)	Flex Duct				Smooth Duct			
Fan Rating cfm @ 0.25 in. w.g.	50	80	100	125	50	80	100	125
	Maximum Allowable Duct Length (ft)							
Diameter, (in)	Flex Duct				Smooth Duct			
3	X	X	X	X	5	X	X	X
4	70	3	X	X	105	35	5	X
5	NL	70	35	20	NL	135	85	55
6	NL	NL	125	95	NL	NL	NL	145
7 and above	NL	NL	NL	NL	NL	NL	NL	NL

This table assumes no elbows. Deduct 15 ft of allowable duct length for each turn, elbow, or fitting. Interpolation and extrapolation in 62.2 Table 5.3 is not allowed. For airflow values not listed, use the next higher value. This table is not applicable for airflow > 125 cfm.
NL = no limit on duct length of this size.
X = not allowed, any length of duct of this size with assumed turns, elbows, fittings will exceed the rated pressure drop.

The responsible person's signature on this document indicates that the installation meets the applicable requirements specified in Table D – Local Mechanical Exhaust System.

For information and data collection only. Not valid until registered with a HERS provider

CERTIFICATE OF INSTALLATION		CF2R-MCH-27-H
Indoor Air Quality and Mechanical Ventilation		(Page 3 of 5)
Project Name:	Enforcement Agency:	Permit Number:
Dwelling Address:	City	Zip Code

F. Other Requirements	
The items listed below (6.1 through 6.8) correspond to the information given in ASHRAE 62.2 Section 6 "Other Requirements". Refer also to Chapter 4.6 of the Residential Compliance Manual (Section 4.6.5) for information describing these "Other Requirements". The signature of the Responsible Person in the declaration statement below certifies that the building complies with these requirements specified in ASHRAE 62.2 Section 6.1 through 6.9 if applicable.	
01	**6.1 Transfer Air** = <<Measures shall be taken to minimize air movement across envelope components to occupiable spaces from garages, unconditioned crawl spaces, and unconditioned attics. Supply and balanced ventilation systems shall be designed and constructed to provide ventilation air directly from the outdoors>>
02	**6.2 Instructions and Labeling** = <<Information on the ventilation design and/or ventilation systems installed, instructions on their proper operation to meet the requirements of this standard, and instructions detailing any required maintenance (similar to that provided for HVAC systems) shall be provided to the owner and the occupant of the dwelling unit. Controls shall be labeled as to their function (unless that function is obvious, such as toilet exhaust fan switches). See Chapter 13 of Guideline 24[2] for information on instructions and labeling>>
03	**6.3 Cloths Dryers** = <<Clothes dryers shall be exhausted directly to the outdoors>>
04	**6.4 Combustion and solid-fuel burning appliances** = << Combustion and solid-fuel burning appliances must be provided with adequate combustion and ventilation air and vented in accordance with manufacturer's installation instructions, NFPA 54/ANSI Z223.1, National Fuel Gas Code, NFPA 31, Standard for the Installation of Oil-Burning Equipment, or NFPA 211, Standard for Chimneys, Fireplaces, Vents, and Solid-Fuel Burning Appliances, or other equivalent code acceptable to the building official. Where atmospherically vented combustion appliances or solid-fuel burning appliances are located inside the pressure boundary, the total net exhaust flow of the two largest exhaust fans (not including a summer cooling fan intended to be operated only when windows or other air inlets are open) shall not exceed 15 cfm/100 ft² (75 Lps/100 m^2) of occupiable space when in operation at full capacity. If the designed total net flow exceeds this limit, the net exhaust flow must be reduced by reducing the exhaust flow or providing compensating outdoor airflow. Atmospherically vented combustion appliances do not include direct-vent appliances.>>
05	**6.5 Garages** = <<When an occupiable space adjoins a garage, the design must prevent migration of contaminants to the adjoining occupiable space. Air seal the walls, ceilings, and floors that separate garages from occupiable space. To be considered air sealed, all joints, seams, penetrations, openings between door assemblies and their respective jambs and framing, and other sources of air leakage through wall and ceiling assemblies separating the garage from the residence and its attic area shall be caulked, gasketed, weather stripped, wrapped, or otherwise sealed to limit air movement. Doors between garages and occupiable spaces shall be gasketed or made substantially airtight with weather stripping>>
06	**6.6 Ventilation Opening Area** = <<Spaces shall have ventilation openings as listed below. Such openings shall meet the requirements of Section 6.8>>
07	**6.7 Minimum filtration** = <<Mechanical systems that supply air to an occupiable space through ductwork exceeding 10 ft (3 m) in length and through a thermal conditioning component, except evaporative coolers, shall be provided with a filter having a designated minimum efficiency of MERV 6, or better, when tested in accordance with ANSI/ASHRAE Standard 52.2, Method of Testing General Ventilation Air-Cleaning Devices for Removal Efficiency by Particle Size, or a minimum Particle Size Efficiency of 50% in the 3.0-10 µm range in accordance with AHRI Standard 680, Performance Rating of Residential Air Filter Equipment. The system shall be designed such that all recirculated and mechanically supplied outdoor air is filtered before passing through the thermal conditioning components. The filter shall be located and installed in such a manner as to facilitate access and regular service by the owner>>
08	**6.8 Air Inlets** = <<Air inlets that are part of the ventilation design shall be located a minimum of 10 ft (3 m) from known sources of contamination such as a stack, vent, exhaust hood, or vehicle exhaust. The intake shall be placed so that entering air is not obstructed by snow, plantings, or other material. Forced air inlets shall be provided with rodent/insect screens (mesh not larger than 1/2 inch)>>
09	**6.9 Carbon Monoxide Detectors** = << A carbon monoxide alarm shall be installed in each dwelling unit in accordance with NFPA 720, *Standard for the Installation of Carbon Monoxide (CO) Detection and Warning Equipment*14, and shall be consistent with requirements of applicable laws, codes, and standards.add brief description>>
The responsible person's signature on this document indicates that the installation meets the applicable requirements specified in Table E – Other Requirements.	

For information and data collection only. Not valid until registered with a HERS provider.

CERTIFICATE OF INSTALLATION		CF2R-MCH-27-H
Indoor Air Quality and Mechanical Ventilation		(Page 4 of 5)
Project Name:	Enforcement Agency:	Permit Number:
Dwelling Address:	City	Zip Code

G. Air Moving Equipment	
The items listed below (7.1 through 7.3) correspond to the information given in ASHRAE 62.2 Section 7 "Air-Moving Equipment". Refer also to Chapter 4.6 of the Residential Compliance Manual (Section 4.6.6) for information describing these requirements in more detail. The signature of the Responsible Person in the declaration statement below certifies that the building complies with these requirements specified in ASHRAE 62.2 Section 7.1 through 7.3 if applicable.	
01	**7.1 Selection and Installation.** Ventilation devices and equipment shall be tested and listed in accordance with specific standards. Installations of systems or equipment shall be carried out in accordance with manufacturers' design requirements and installation instructions.
02	**7.2 Sound Ratings for Fans.** Ventilation fans shall be rated for sound at no less than the minimum airflow rate required by this standard, as noted below. These sound ratings shall be at a minimum of 0.1 in. w.c. (25 Pa) static pressure. 7.2.1 **Whole-Building or Continuous Ventilation Fans.** These fans shall be rated for sound at a maximum of 1.0 sone. 7.2.2 **Intermittent Local Exhaust Fans.** Fans used to comply with Section 5.2 shall be rated for sound at a maximum of 3 sone, unless their maximum rated airflow exceeds 400 cfm (200 L/s). (Some exceptions may apply.)
03	**7.3 Multibranch Exhaust Ducting.** If more than one of the exhaust fans in a dwelling unit shares a common exhaust duct, each fan shall be equipped with a back-draft damper to prevent the recirculation of exhaust air from one room to another through the exhaust ducting system.
The responsible person's signature on this document indicates that the installation meets the applicable requirements specified in Table F – Air Moving Equipment.	

H. Multifamily Buildings - Other Requirements <<only print this section if multi-family is selected in row A.1>>	
The items listed below correspond to the information given in ASHRAE 62.2 Section 8 "Multifamily Buildings". Refer also to Chapter 4.6 of the Residential Compliance Manual (Section 4.6.5) for information describing these requirements in more detail. The signature of the Responsible Person in the declaration statement below certifies that the building complies with these requirements specified in ASHRAE 62.2 Section 8, if applicable.	
01	**8.4.1 Transfer Air.** Measures shall be taken to minimize air movement across envelope components separating dwelling units, including sealing penetrations in the common walls, ceilings, and floors of each unit and by sealing vertical chases adjacent to the units. All doors between dwelling units and common hallways shall be gasketed or made substantially airtight. **8.4.1.1 Compliance.** One method of demonstrating compliance with Section 8.4.1 shall be to verify a leakage rate below a maximum of 0.2 cfm per ft^2 (100 L/s per 100 m^2) of the dwelling unit envelope area (i.e., the sum of the area of the walls between dwelling units, exterior walls, ceiling and floor) at a test pressure of 50 Pa by a blower door test. The test shall be conducted with the dwelling unit as if it were exposed to outdoor air on all sides, top, and bottom by opening doors and windows of adjacent dwelling units.
The responsible person's signature on this document indicates that the installation meets the applicable requirements specified in Table G – Multifamily Buildings	

For information and data collection only. Not valid until registered with a HERS provider

CERTIFICATE OF INSTALLATION		CF2R-MCH-27-H
Indoor Air Quality and Mechanical Ventilation		(Page 5 of 5)
Project Name:	Enforcement Agency:	Permit Number:
Dwelling Address:	City	Zip Code

DOCUMENTATION AUTHOR'S DECLARATION STATEMENT	
1. I certify that this Certificate of Installation documentation is accurate and complete.	
Documentation Author Name:	Documentation Author Signature:
Documentation Author Company Name:	Date Signed:
Address:	CEA/HERS Certification Identification (If applicable):
City/State/Zip:	Phone:

RESPONSIBLE PERSON'S DECLARATION STATEMENT

I certify the following under penalty of perjury, under the laws of the State of California:

1. The information provided on this Certificate of Installation is true and correct.
2. I am eligible under Division 3 of the Business and Professions Code in the applicable classification to accept responsibility for the system design, construction, or installation of features, materials, components, or manufactured devices for the scope of work identified on this Certificate of Installation and attest to the declarations in this statement (responsible builder/installer), otherwise I am an authorized representative of the responsible builder/installer.
3. The constructed or installed features, materials, components or manufactured devices (the installation) identified on this Certificate of Installation conforms to all applicable codes and regulations, and the installation conforms to the requirements given on the plans and specifications approved by the enforcement agency.
4. I understand that a HERS rater will check the installation to verify compliance, and that if such checking identifies defects; I am required to take corrective action at my expense. I understand that Energy Commission and HERS Provider representatives will also perform quality assurance checking of installations, including those approved as part of a sample group but not checked by a HERS rater, and if those installations fail to meet the requirements of such quality assurance checking, the required corrective action and additional checking/testing of other installations in that HERS sample group will be performed at my expense.
5. I reviewed a copy of the Certificate of Compliance approved by the enforcement agency that identifies the specific requirements for the scope of construction or installation identified on this Certificate of Installation, and I have ensured that the requirements that apply to the construction or installation have been met.
6. I will ensure that a registered copy of this Certificate of Installation shall be posted, or made available with the building permit(s) issued for the building, and made available to the enforcement agency for all applicable inspections. I understand that a registered copy of this Certificate of Installation is required to be included with the documentation the builder provides to the building owner at occupancy.

Responsible Builder/Installer Name:	Responsible Builder/Installer Signature:	
Company Name: (Installing Subcontractor or General Contractor or Builder/Owner)	Position With Company (Title):	
Address:	CSLB License:	
City/State/Zip:	Phone	Date Signed:
Third Party Quality Control Program (TPQCP) Status:	Name of TPQCP (if applicable):	

For information and data collection only. Not valid until registered with a HERS provider.

User Instructions – MCH-27d:

Section A. General Information

1 This information is automatically pulled from the CF1R Choices are "single family" and "low-rise multifamily"
2 This information is automatically pulled from the CF1R. Value to be entered in the field equals the conditioned floor area of the space, in square feet.
3 This information is automatically pulled from the CF1R. Value to be entered in the field equals the number of bedrooms in the home.
4 Select the Ventilation Operation Schedule method used from the choices provided:
- Continuous
- Intermittent

5 Select the Whole Building Ventilation Rate Calculation Method from the choices provided:
- Fan Ventilation Rate Method
- Total Ventilation Rate Method

6 Select the Whole Building Ventilation System Type from the choices provided:
- Standalone - Exhaust
- Standalone - Supply
- Standalone - Balanced
- Central Fan Integrated (CFI)

Section B. Whole Building Continuous Ventilation – Total Ventilation Rate Method

1 This value is automatically calculated using 62.2 equation 4.2a. The equation used to calculate this value in the field equals:
   a. If A.1= Single Family then [(0.03 x conditioned floor area A. 2) + 7.5(Number of bedrooms A.3 + 1)] = Required Continuous Whole-Building Ventilation Rate
   b. If A.1= Multifamily then [(0.05 x conditioned floor area A. 2) + 7.5(Number of bedrooms A.3 + 1)] = Required Continuous Whole-Building Ventilation Rate
2 This information is automatically pulled from the registered ENV-20a-d row A.2
3 This value is automatically calculated. The equation used to calculate this value in the field equals: (CFM50 B.2 x 0.055= Equivalent Leakage Area (ELA)
4 User entered value equals the vertical distance from the lowest above-grade floor to the highest ceiling in feet
5 User entered value equals the Weather Shielding Factor (wsf) from 62.2 Appendix X Table X1.
6 This value is automatically calculated using 62.2 equation 4.5. The equation used to calculate this value in the field equals: [1000 x (Equivalent Leakage Area (ELA) row B.2/ conditioned floor area A. 2) x (Vertical Distance B.4/8.2)^0.4]= Normalized Leakage (NL)
7 This value is automatically calculated using 62.2 equation 4.6a. The equation used to calculate this value in the field equals: (Normalized Leakage (NL) row B.6 x conditioned floor area A. 2)/7.3= Ventilation Provided by Ventilation
8 This value is automatically calculated using 62.2 equation 4.6a. The equation used to calculate this value in the field equals: (Normalized Leakage (NL) row B.6 x conditioned floor area A. 2)/7.3= Ventilation Provided by Infiltration in (CFM)
9 This value is automatically calculated using 62.2 equation 4.7. The equation used to calculate this value in the field equals: (Required Continuous Whole-Building Ventilation Rate row B.1 - Ventilation Provided by Infiltration row B.8 = Required Continuous Whole-Building Ventilation Rate in (CFM)

Section C. Intermittent Ventilation

1 Intermittent ventilation requires controls that ensure a regular operating schedule every 24 hours. Within a 24 hour period there will be one or more regular on off cycles. For a single on off cycle, enter the on time in hours. This value will be verified by a HERS rater.
2 Intermittent ventilation requires controls that ensure a regular operating schedule every 24 hours. Within a 24 hour period there will be one or more regular on off cycles. For a single on off cycle, enter the off time in hours. This value will be verified by a HERS rater.
3 This row performs an automatic check. The intermittent ventilation system must operate at least once every 24 hours. For this to occur, the on time plus the off time in a single on off cycle must be less than 24 hours. If this is true, "OK" will appear. If this is not true, an error will appear here and correct values will need to be entered into Rows C.1 and C.2. The equation used to calculate this value in the field equals: Time on in hours row C.1 + Time off in hours row C.2.
4 This value is automatically calculated. It is the daily fractional on time (*f*) used in 62.2 Table 4.2. A value of 0.60 means that in a 24 hour period the fan will run 60% of the time. The equation used to calculate this value in the field equals: On time in Hours row C.1/(On time in Hours row C.1 + Off time in Hours row C.2)= Daily fractional on time
5 This row performs an automatic check. The ventilation system must operate at least 10% of the time. Row C.4 must be ≥ 0.10. If this is true, "OK" will appear. If this is not true, an error message will appear here and correct values will need to be entered into Rows C.1 and C.2.
6 This value is automatically calculated. It is the turnover (N) used in 62.2 Table 4.2. The equation used to calculate this value in the field equals: [12.8 x Continuous Whole-Building Ventilation Rate row B.1 x (On time in Hours row C.1 + Off time in Hours row C.2)]/ Conditioned floor area of dwelling unit row A.2= Turnover N

For information and data collection only. Not official until registered with a HERS provider

7 User entered value use the daily fractional time (*f*) from Row C.4 and the turnover (N) from Row C.6 to determine the ventilation effectiveness value (e) from 62.2 table 4.2.

8 This value is automatically calculated using 62.2 equation 4.8. It represents the required airflow in cfm that must be delivered during the ventilation system on times. This value will be verified by a HERS rater. The equation used to calculate this value in the field equals: Continuous Whole-Building Ventilation Rate row B.1/(Daily fractional on time row C.4 x ventilation effectiveness value row C.7= required Intermittent ventilation rate

9 User entered value equals the installed intermittent ventilation rate in (CFM)

For information and data collection only. Not valid until registered with a HERS provider

DOCUMENTATION AUTHOR'S DECLARATION STATEMENT

2. I certify that this Certificate of Installation documentation is accurate and complete.

Documentation Author Name:	Documentation Author Signature:
Documentation Author Company Name:	Date Signed:
Address:	CEA/HERS Certification Identification (If applicable):
City/State/Zip:	Phone:

RESPONSIBLE PERSON'S DECLARATION STATEMENT

I certify the following under penalty of perjury, under the laws of the State of California:

7. The information provided on this Certificate of Installation is true and correct.
8. I am eligible under Division 3 of the Business and Professions Code in the applicable classification to accept responsibility for the system design, construction, or installation of features, materials, components, or manufactured devices for the scope of work identified on this Certificate of Installation and attest to the declarations in this statement (responsible builder/installer), otherwise I am an authorized representative of the responsible builder/installer.
9. The constructed or installed features, materials, components or manufactured devices (the installation) identified on this Certificate of Installation conforms to all applicable codes and regulations, and the installation conforms to the requirements given on the plans and specifications approved by the enforcement agency.
10. I understand that a HERS rater will check the installation to verify compliance, and that if such checking identifies defects; I am required to take corrective action at my expense. I understand that Energy Commission and HERS Provider representatives will also perform quality assurance checking of installations, including those approved as part of a sample group but not checked by a HERS rater, and if those installations fail to meet the requirements of such quality assurance checking, the required corrective action and additional checking/testing of other installations in that HERS sample group will be performed at my expense.
11. I reviewed a copy of the Certificate of Compliance approved by the enforcement agency that identifies the specific requirements for the scope of construction or installation identified on this Certificate of Installation, and I have ensured that the requirements that apply to the construction or installation have been met.
12. I will ensure that a registered copy of this Certificate of Installation shall be posted, or made available with the building permit(s) issued for the building, and made available to the enforcement agency for all applicable inspections. I understand that a registered copy of this Certificate of Installation is required to be included with the documentation the builder provides to the building owner at occupancy.

Responsible Builder/Installer Name:	Responsible Builder/Installer Signature:	
Company Name: (Installing Subcontractor or General Contractor or Builder/Owner)	Position With Company (Title):	
Address:	CSLB License:	
City/State/Zip:	Phone	Date Signed:
Third Party Quality Control Program (TPQCP) Status:	Name of TPQCP (if applicable):	

For information and data collection only. Not valid until registered with a HERS provider

RETURN DUCT DESIGN AND AIR FILTER DEVICE SIZING ACCORDING TO TABLES 150.0-C OR D

CERTIFICATE OF INSTALLATION		CF2R-MCH-28-H
Return Duct Design and Air Filter Device Sizing According to Tables 150.0-C or D		(Page 1 of 2)
Project Name:	Enforcement Agency:	Permit Number:
Dwelling Address:	City	Zip Code

A. System Information		
01	System Identification or Name	
02	System Location or Area Served	
03	Nominal Cooling Capacity (tons) of Condenser	
04	Number of Return Ducts	

B. One Return Duct Use of this table is only applicable if the input to RowA04 is "One Return Duct"		
01	Minimum Return Duct Diameter (inches)	
02	Installed Return Duct Diameter (inches)	
03	Minimum Total Return Filter Grille Gross Area (inch$^{2)}$	
04	Installed Total Return Filter Grille Gross Area (inch^2)	
05	Compliance Statement:	

C. Two Return Ducts (Use of this table is only applicable if the input to RowA04 is "Two Return Ducts")		
01	Minimum Return Duct1 Diameter (inches)	
02	Installed Return Duct1 Diameter (inches)	
03	Minimum Return Duct2 Diameter (inches)	
04	Installed Return Duct2 Diameter (inches)	
05	Minimum Total Return Filter Grille Gross Area (inch^2)	
06	Installed Total Return Filter Grille Gross Area (inch^2)	
07	Compliance Statement:	

D Additional Requirements For Compliance	
01	Qualification for the Alternative to Section 150.0(m)13B requires that the ducted space conditioning system shall not use zoning dampers. Systems that use zoning dampers shall comply with the requirements of Section 150.0(m)15.
02	The return duct length for each return air filter grille shall not exceed 30 linear feet.
03	The return duct(s) shall not contain more than a total of 180 degrees of bend.
04	If the return duct contains more than 90 degrees of bend, one of the bends shall be a metal elbow.
05	Return grille devices shall be labeled in accordance with the requirements in section 150.0(m)12A to disclose the grille's design airflow rate and a maximum allowable clean-filter pressure drop of 12.5 Pa (0.05 inches water) for the air filter media as rated in accordance with AHRI Standard 680 for the design airflow rate for the return grille.
The responsible person's signature on this document indicates that the installation meets these requirements specified in Table D.	

For information and data collection only. Not valid until registered with a HERS provider

RETURN DUCT DESIGN AND AIR FILTER DEVICE SIZING ACCORDING TO TABLES 150.0-C OR D

CERTIFICATE OF INSTALLATION		CF2R-MCH-28-H
Return Duct Design and Air Filter Device Sizing According to Tables 150.0-C or D		(Page 2 of 2)
Project Name:	Enforcement Agency:	Permit Number:
Dwelling Address:	City	Zip Code

DOCUMENTATION AUTHOR'S DECLARATION STATEMENT

1. I certify that this Certificate of Installation documentation is accurate and complete.

Documentation Author Name:	Documentation Author Signature:
Documentation Author Company Name:	Date Signed:
Address:	CEA/HERS Certification Identification (If applicable):
City/State/Zip:	Phone:

RESPONSIBLE PERSON'S DECLARATION STATEMENT

I certify the following under penalty of perjury, under the laws of the State of California:

1. The information provided on this Certificate of Installation is true and correct.
2. I am eligible under Division 3 of the Business and Professions Code in the applicable classification to accept responsibility for the system design, construction, or installation of features, materials, components, or manufactured devices for the scope of work identified on this Certificate of Installation and attest to the declarations in this statement (responsible builder/installer), otherwise I am an authorized representative of the responsible builder/installer.
3. The constructed or installed features, materials, components or manufactured devices (the installation) identified on this Certificate of Installation conforms to all applicable codes and regulations, and the installation conforms to the requirements given on the plans and specifications approved by the enforcement agency.
4. I understand that a HERS rater will check the installation to verify compliance, and that if such checking identifies defects; I am required to take corrective action at my expense. I understand that Energy Commission and HERS Provider representatives will also perform quality assurance checking of installations, including those approved as part of a sample group but not checked by a HERS rater, and if those installations fail to meet the requirements of such quality assurance checking, the required corrective action and additional checking/testing of other installations in that HERS sample group will be performed at my expense.
5. I reviewed a copy of the Certificate of Compliance approved by the enforcement agency that identifies the specific requirements for the scope of construction or installation identified on this Certificate of Installation, and I have ensured that the requirements that apply to the construction or installation have been met.
6. I will ensure that a registered copy of this Certificate of Installation shall be posted, or made available with the building permit(s) issued for the building, and made available to the enforcement agency for all applicable inspections. I understand that a registered copy of this Certificate of Installation is required to be included with the documentation the builder provides to the building owner at occupancy.

Responsible Builder/Installer Name:	Responsible Builder/Installer Signature:	
Company Name: (Installing Subcontractor or General Contractor or Builder/Owner)	Position With Company (Title):	
Address:	CSLB License:	
City/State/Zip:	Phone	Date Signed:
Third Party Quality Control Program (TPQCP) Status:	Name of TPQCP (if applicable):	

For information and data collection only. Not valid unless registered with a HERS provider

INSTALLER INSTRUCTIONS – MCH-28

Section A. System Information

01. *System Identification or Name:* the system identification/name is automatically pulled from the MCH-01.
02. *System Location or Area Served:* the location/area served is automatically pulled from the MCH-01.
03. *Nominal Cooling Capacity (tons) of Condenser:* this value is automatically pulled from the MCH-01.
04. *Number of Return Ducts:* Select the number of return ducts from the options given in the pull down list, either one or two return ducts.

<<Only shown if the input to row A04 is "One Return Duct>>
Section B. One Return Duct

01. *Minimum Return Duct Diameter:* This field is automatically calculated based on row A03.
02. *Installed Return Duct Diameter:* Enter the installed return duct diameter (inches).
03. *Minimum Total Return Filter Grille Gross Area:* This field is automatically calculated based on row A03.
04. *Installed Total Return Filter Grille Gross Area:* Enter the installed return filter grille gross area (inch^2). The area is equal to the length (inches) multiplied by the width (inches).
05. *Compliance Statement:* This field is automatically populated based on the inputs to rows B02 and B04.

<<Only shown if the input to row A04 is "Two Return Ducts>>
Section C. Two Return Ducts

01. *Minimum Return Duct1 Diameter:* This field is automatically calculated based on row A03.
02. *Installed Return Duct1 Diameter:* Enter the diameter (inches) for the first return duct run.
03. *Minimum Return Duct2 Diameter:* This field is automatically calculated based on row A03.
04. *Installed Return Duct2 Diameter:* Enter the diameter (inches) for the second return duct run.
05. *Minimum Total Return Filter Grille Gross Area:* This field is automatically calculated based on row A03.
06. *Installed Total Return Filter Grille Gross Area:* Enter the total return filter grille gross area by summing up the two grille areas. The area of each grill is equal to the length (inches) multiplied by the width (inches).
07. *Compliance Statement:* This field is automatically populated based on the inputs to row C02, C04 and C06.

For information and data collection only. Not valid until reviewed with a HERS provider

DUCT SURFACE AREA REDUCTION; R-VALUE; BURIED DUCTS COMPLIANCE CREDIT

CERTIFICATE OF INSTALLATION		CF2R-MCH-29-H
Duct Surface Area Reduction; R-Value; Buried Ducts Compliance Credit		(Page 1 of 3)
Project Name:	Enforcement Agency:	Permit Number:
Dwelling Address:	City	Zip Code

Note: Submit one Certificate of installation for each duct system that must demonstrate compliance in the dwelling.

A. DUCT SYSTEM INFORMATION		
01.	Duct System Name or Identification/Tag:	
02.	Duct System Location or Area Served:	
03	Status - Duct Surface Area Reduction And R-Value Compliance Credit	
04	Status - Buried Ducts Compliance Credit	
05	Status - Deeply Buried Ducts Compliance Credit	

<<this table only applicable if Duct Surface Area Reduction And R-Value Compliance Credit claimed on CF1R>>

B. DUCT SURFACE AREA REDUCTION AND R-VALUE COMPLIANCE CREDIT Credit is available for supply duct systems with reduced surface area in unconditioned space with varying combinations of higher performance insulation if the system complies with the following requirements:	
01	The duct system design shall be detailed in the special features section of the CF1R-PRF-01-E approved by the enforcement agency.
02	A duct design layout that conforms to the duct system design details in the special features section of the CF1R-PRF-01-E shall be documented on the building design plans approved by the enforcement agency.
03	The duct system installation, including duct sizes and locations of supply & return registers shall conform to the duct system design layout approved by the enforcement agency.
04	The duct system installation shall be verified by a HERS rater according to the requirements in RA3.1.4.1.4.
05	The duct system installation shall not have severely twisted or compressed sections that would restrict required operating airflow.
The responsible person's signature on this document indicates that the installation meets these requirements specified in Table B.	

<<this table only applicable if Buried Ducts Compliance Credit claimed on CF1R>>

C. BURIED DUCTS COMPLIANCE CREDIT Ducts partly or completely buried in blown attic insulation in dwelling units meeting the requirements for verified quality insulation installation may take credit for increased effective duct insulation if the system complies with the following requirements:	
01	The duct system design shall be detailed in the special features section of the CF1R-PRF-01-E approved by the enforcement agency.
02	A duct design layout that conforms to the duct system design details in the special features section of the CF1R-PRF-01-E shall be documented on the building design plans approved by the enforcement agency.
03	The duct system installation, including duct sizes and locations of supply & return registers shall conform to the duct system design layout approved by the enforcement agency.
04	The duct system installation shall be verified by a HERS rater according to the requirements in RA3.1.4.1.5.
05	The duct system installation shall not have severely twisted or compressed sections that would restrict required operating airflow.
06	The dwelling shall comply with all Quality Insulation Installation requirements as documented on the applicable CF2R and CF3R.
The responsible person's signature on this document indicates that the installation meets these requirements specified in Table C.	

For information and data collection only. Not valid until registered with a HERS provider

CERTIFICATE OF INSTALLATION		CF2R-MCH-29-H
Duct Surface Area Reduction; R-Value; Buried Ducts Compliance Credit		(Page 2 of 3)
Project Name:	Enforcement Agency:	Permit Number:
Dwelling Address:	City	Zip Code

<<this table only applicable if Deeply Buried Ducts Compliance Credit claimed on CF1R>>

D. DEEPLY BURIED DUCTS COMPLIANCE CREDIT Duct segments deeply buried in lowered areas of ceiling and covered by at least 3.5 inches of insulation above the top of the duct insulation jacket may claim effective insulation of R-25 for fiberglass insulation and R-31 for cellulose insulation if the system complies with the following requirements:	
01	The duct system design shall be detailed in the special features section of the CF1R-PRF-01-E approved by the enforcement agency.
02	A duct design layout that conforms to the duct system design details in the special features section of the CF1R-PRF-01-E shall be documented on the building design plans approved by the enforcement agency.
03	The duct system installation, including duct sizes and locations of supply & return registers shall conform to the duct system design layout approved by the enforcement agency.
04	The duct system installation shall be verified by a HERS rater according to the requirements in RA3.1.4.1.6.
05	The duct system installation shall not have severely twisted or compressed sections that would restrict required operating airflow.
06	The dwelling shall comply with all Quality Insulation Installation requirements as documented on the applicable CF2R and CF3R.
The responsible person's signature on this document indicates that the installation meets these requirements specified in Table D.	

For information and data collection only. Not valid until registered with a HERS provider

DUCT SURFACE AREA REDUCTION; R-VALUE; BURIED DUCTS COMPLIANCE CREDIT

CERTIFICATE OF INSTALLATION		CF2R-MCH-29-H
Duct Surface Area Reduction; R-Value; Buried Ducts Compliance Credit		(Page 3 of 3)
Project Name:	Enforcement Agency:	Permit Number:
Dwelling Address:	City	Zip Code

DOCUMENTATION AUTHOR'S DECLARATION STATEMENT	
1. I certify that this Certificate of Installation documentation is accurate and complete.	
Documentation Author Name:	Documentation Author Signature:
Documentation Author Company Name:	Date Signed:
Address:	CEA/HERS Certification Identification (If applicable):
City/State/Zip:	Phone:

RESPONSIBLE PERSON'S DECLARATION STATEMENT

I certify the following under penalty of perjury, under the laws of the State of California:

1. The information provided on this Certificate of Installation is true and correct.
2. I am eligible under Division 3 of the Business and Professions Code in the applicable classification to accept responsibility for the system design, construction, or installation of features, materials, components, or manufactured devices for the scope of work identified on this Certificate of Installation and attest to the declarations in this statement (responsible builder/installer), otherwise I am an authorized representative of the responsible builder/installer.
3. The constructed or installed features, materials, components or manufactured devices (the installation) identified on this Certificate of Installation conforms to all applicable codes and regulations, and the installation conforms to the requirements given on the plans and specifications approved by the enforcement agency.
4. I understand that a HERS rater will check the installation to verify compliance, and that if such checking identifies defects; I am required to take corrective action at my expense. I understand that Energy Commission and HERS Provider representatives will also perform quality assurance checking of installations, including those approved as part of a sample group but not checked by a HERS rater, and if those installations fail to meet the requirements of such quality assurance checking, the required corrective action and additional checking/testing of other installations in that HERS sample group will be performed at my expense.
5. I reviewed a copy of the Certificate of Compliance approved by the enforcement agency that identifies the specific requirements for the scope of construction or installation identified on this Certificate of Installation, and I have ensured that the requirements that apply to the construction or installation have been met.
6. I will ensure that a registered copy of this Certificate of Installation shall be posted, or made available with the building permit(s) issued for the building, and made available to the enforcement agency for all applicable inspections. I understand that a registered copy of this Certificate of Installation is required to be included with the documentation the builder provides to the building owner at occupancy.

Responsible Builder/Installer Name:	Responsible Builder/Installer Signature:	
Company Name: (Installing Subcontractor or General Contractor or Builder/Owner)	Position With Company (Title):	
Address:	CSLB License:	
City/State/Zip:	Phone	Date Signed:
Third Party Quality Control Program (TPQCP) Status:	Name of TPQCP (if applicable):	

For information and data collection only. Not valid until registered with a HERS provider

Instructions

A. DUCT INFORMATION

1. System Name or Identification/Tag: This field is auto filled as referenced from the CF2R-MCH-01-E. This provides an identification name or tag name that uniquely identifies the duct system. If there is a mechanical plan for the system, the tag name may be given on the plans.
2. System Location or Area Served: This field is auto filled as referenced from the CF2R-MCH-01-E. This provides a brief description of the area served by the duct system (e.g. upstairs; downstairs).
3. Status – Duct Surface Area Reduction and R-Value Compliance Credit: This field is auto filled from the CF1R indicating if the credit is being used. If not, then N/A will be displayed.
4. Status – Buried Ducts Compliance Credit: This filed is auto filled from the CF1R indicating if the credit is being used. If not, then "N/A" will be displayed.
5. Status – Deeply Buried Ducts Compliance Credit: This field is auto filled from the CF1R indicating if the credit is being used. If not, then "N/A" will be displayed.

B. SUPPLY DUCT SURFACE AREA REDUCTION AND R-VALUE COMPLIANCE CREDIT

In order receive the credit, the supply duct system must comply with the requirements listed in this Table B. The responsible person's signature on the CF2R-MCH-29-H document indicates that the installation meets these requirements specified in Table B.

C. BURIED DUCTS COMPLIANCE CREDIT

In order receive the credit, the supply duct system must comply with the requirements listed in this Table C. The responsible person's signature on the CF2R-MCH-29-H document indicates that the installation meets these requirements specified in Table C.

D. DEEPLY BURIED DUCTS COMPLIANCE CREDIT

In order receive the credit, the supply duct system must comply with the requirements listed in this Table D. The responsible person's signature on the CF2R-MCH-29-H document indicates that the installation meets these requirements specified in Table D.

For information and data collection only. Not valid until registered with a HERS provider

Central Fan Ventilation Cooling Systems (VCS)

CERTIFICATE OF INSTALLATION		CF2R-MCH-30-H
Central Fan Ventilation Cooling Systems (VCS)		(Page 1 of 2)
Project Name:	Enforcement Agency:	Permit Number:
Dwelling Address:	City	Zip Code

Central Fan Ventilation Cooling System (VCS)

When the Certificate of Compliance indicates a Central Fan Ventilation Cooling system is installed, the following items must be verified by the installer and also by a HERS Rater on a corresponding CF2R-MCH30.

A. Central Fan Ventilation Cooling System (VCS) Equipment Information		
01	System Name or Identification/Tag	
02	System Location or Area Served	
03	Central Fan VCS Equipment - Manufacturer Name	
04	Central Fan VCS Equipment - Manufacturer Model #	
05	Central Fan VCS Equipment - Fan Type	
06	Central Fan VCS Equipment - Certification Status	
07	Duct Leakage Verification Status	
08	Fan Efficacy Verification Status	
09	Central Fan Ventilation Cooling System controls: includes installation of an indoor thermostat	
10	Central Fan Ventilation Cooling System controls: includes installation of an outdoor temperature sensor to initiate and terminate ventilation cooling operation automatically.	
11	Central Fan Ventilation Cooling System controls: includes installation of an air handler temperature sensor to ensure correct outdoor air damper position.	

B. Compliance Statement

C. Additional Requirements	
01	Qualification for Central Fan Ventilation Cooling Compliance Credit requires use of approved models Certified to the Energy Commission for use for Ventilation Cooling, and listed in the Special Case Appliances Directory on the Energy Commission Website.
02	Variable speed motor systems shall be capable of varying system airflow rate in a continuous range between full air flow rate (100%) and a minimum airflow rate of no more than 25% of the full airflow rate.
03	The Central Fan Ventilation Cooling System manufacturer shall provide detailed system operation documentation to the building owner that describes how to configure the system controls and operate the system to obtain the maximum energy savings benefit. The manufacturer's system operation documentation shall also describe how the system's control strategy is implemented; how the fan speed is controlled during ventilation cooling mode; and how ventilation cooling rates are determined. System target ventilation cooling rate calculations (if applicable) shall occur at time intervals of 24 hours or less to ensure the system responds correctly to changes in weather patterns.
The responsible person's signature on this document indicates that the installation meets these requirements specified in Table C.	

For information and data collection only. Not valid until registered with a HERS provider

CERTIFICATE OF INSTALLATION		CF2R-MCH-30-H
Central Fan Ventilation Cooling Systems (VCS)		(Page 2 of 2)
Project Name:	Enforcement Agency:	Permit Number:
Dwelling Address:	City	Zip Code

DOCUMENTATION AUTHOR'S DECLARATION STATEMENT	
1. I certify that this Certificate of Installation documentation is accurate and complete.	
Documentation Author Name:	Documentation Author Signature:
Documentation Author Company Name:	Date Signed:
Address:	CEA/CEPE/HERS certification identification (If applicable):
City/State/Zip:	Phone:

RESPONSIBLE PERSON'S DECLARATION STATEMENT

I certify the following under penalty of perjury, under the laws of the State of California:

1. The information provided on this Certificate of Installation is true and correct.
2. I am eligible under Division 3 of the Business and Professions Code to accept responsibility for the scope of construction or installation, in the applicable classification, for the scope of work specified on this Certificate of Installation (responsible builder/installer), otherwise I am an authorized representative of the responsible builder/installer.
3. The constructed or installed features, materials, components or manufactured devices (the installation) identified on this Certificate of Installation conforms to all applicable codes and regulations, and the installation conforms to the requirements given on the plans and specifications approved by the enforcement agency.
4. I reviewed a copy of the Certificate of Compliance approved by the enforcement agency that identifies the specific requirements for the scope of construction or installation identified on this Certificate of Installation, and I have ensured that the requirements that apply to the construction or installation have been met.
5. I will ensure that a registered copy of this Certificate of Installation shall be posted, or made available with the building permit(s) issued for the building, and made available to the enforcement agency for all applicable inspections. I understand that a registered copy of this Certificate of Installation is required to be included with the documentation the builder provides to the building owner at occupancy.

Responsible Builder/Installer Name:	Responsible Builder/Installer Signature:	
Company Name: (Installing Subcontractor or General Contractor or Builder/Owner)	Position With Company (Title):	
Address:	CSLB License:	
City/State/Zip:	Phone	Date Signed:

For information and data collection only. Not valid until registered with a HERS provider.

Instructions for MCH-02

Section A. Whole House Fan Equipment Information

1. Enter the Central Fan Ventilation Cooling System (VCS) Name or identification tag to help identify this system from other systems in the house. This field is automatically filled in as referenced from the MCH-01 description for this system.
2. Enter the Location or Area Served by the Central Fan VCS. This is a tag to distinguish this system from other systems in the house. This field is automatically filled in as referenced from the MCH-01 description for this system.
3. Enter the Central Fan VCS Manufacturer Name.
4. Enter the Central Fan VCS Manufacturer Model Number.
5. The Central Fan VCS fan type is specified by the performance approach software. This fireld is filled in automatically as referenced from the CF1R. The choices are "Fixed" or "Variable". Variable fans receive more compliance credit. The installed fan type should match the fan type specified on the CF1R.
6. Installer must verify/confirm that the Central Fan VCS Equipment is included in the Energy Commission listing of approved VCS devices and that the fan type, "Fixed" or "Variable", indicated in Row A05 matches what is shown on the list.
7. Compliance credit for Central Fan VCS also requires that the system conforms to the maximum Duct Leakage verification requirements. This row automatically queries the project data to confirm that a MCH20 has been registered indicating that the system passed the duct leakage criterion.
8. Compliance credit for Central Fan VCS also requires that the system pass the Fan Efficacy requirements. This row automatically queries the project data to confirm that a MCH22 Fan Efficacy verification has been registered indicating that the system passed.
9. Installer must confirm that the Central Fan VCS includes a properly installed indoor thermostat designed specifically for use with the installed VCS.
10. Installer must confirm that the Central Fan VCS includes a properly installed outdoor temperature sensor to initiate and terminate ventilation cooling operation automatically.
11. Installer must confirm that the Central Fan VCS includes a properly installed air handler temperature sensor to verify damper position.

For information and data collection only. Not valid until registered with a HERS provider

WATER HEATING SYSTEM GENERAL INFORMATION

CERTIFICATE OF INSTALLATION		CF2R-PLB-01-E
Water Heating System General Information		(Page 1 of 2)
Project Name:	Enforcement Agency:	Permit Number:
Building Type:	City	Zip Code

A. GENERAL INFORMATION/SYSTEM INFORMATION		
01	Water Heater System Name:	
02	Water Heater System Configuration:	
03	Water Heater System Type:	
04	Total Number of Water Heaters in Systems:	
05	Central DHW Distribution Type:	
06	Dwelling Unit DHW Distribution Type:	
The responsible person's signature on this Certificate of Installation indicates the system identified on this Certificate has complied with all applicable requirements specified in this Table.		

B. WATER HEATER INFORMATION *Each water heater type requires a separate form.*		
01	Water Heater Type:	
02	Fuel Type	
03	Manufacturer:	
04	Model Number:	
05	Number of Identical Water Heaters:	
06	Efficiency:	
07	Required Minimum Efficiency:	
08	Standby Total or Standby:	
09	Rated Input	
10	Pilot Energy:	
11	Water Heater Tank Storage Volume:	
12	Exterior Insulation On Water Heater:	
13	Volume of Supplemental Storage:	
14	Internal Insulation on Supplemental Storage:	
15	Exterior Insulation on Supplemental Storage:	
The responsible person's signature on this Certificate of Installation indicates the system identified on this Certificate has complied with all applicable requirements specified in this Table.		

C. HYDRONIC OR COMBINED HYDRONIC SYSTEM EFFECTIVE AFUE EFFICIENCY		
01	Pipe Diameter	
02	Pipe Length	
03	Pipe Insulation	
04	Pump Wattage	
05	Effective AFUE (Unitless)	
The responsible person's signature on this Certificate of Installation indicates the system identified on this Certificate has complied with all applicable requirements specified in this Table.		

For information and data collection only. Not valid until registered with a HERS provider

WATER HEATING SYSTEM GENERAL INFORMATION

CERTIFICATE OF INSTALLATION		CF2R-PLB-01-E
Water Heating System General Information		(Page 2 of 2)
Project Name:	Enforcement Agency:	Permit Number:
Building Type:	City	Zip Code

DOCUMENTATION AUTHOR'S DECLARATION STATEMENT	
1. I certify that this Certificate of Installation documentation is accurate and complete.	
Documentation Author Name:	Documentation Author Signature:
Documentation Author Company Name:	Date Signed:
Address:	CEA/HERS Certification Identification (If applicable):
City/State/Zip:	Phone:

RESPONSIBLE PERSON'S DECLARATION STATEMENT

I certify the following under penalty of perjury, under the laws of the State of California:

1. The information provided on this Certificate of Installation is true and correct.
2. I am eligible under Division 3 of the Business and Professions Code in the applicable classification to accept responsibility for the system design, construction, or installation of features, materials, components, or manufactured devices for the scope of work identified on this Certificate of Installation, and attest to the declarations in this statement (responsible builder/installer), otherwise I am an authorized representative of the responsible builder/installer.
3. The constructed or installed features, materials, components or manufactured devices (the installation) identified on this Certificate of Installation conforms to all applicable codes and regulations, and the installation conforms to the requirements given on the plans and specifications approved by the enforcement agency.
4. I reviewed a copy of the Certificate of Compliance approved by the enforcement agency that identifies the specific requirements for the scope of construction or installation identified on this Certificate of Installation, and I have ensured that the requirements that apply to the construction or installation have been met.
5. I will ensure that a registered copy of this Certificate of Installation shall be posted, or made available with the building permit(s) issued for the building, and made available to the enforcement agency for all applicable inspections. I understand that a registered copy of this Certificate of Installation is required to be included with the documentation the builder provides to the building owner at occupancy.

Responsible Builder/Installer Name:	Responsible Builder/Installer Signature:	
Company Name: (Installing Subcontractor or General Contractor or Builder/Owner)	Position With Company (Title):	
Address:	CSLB License:	
City/State/Zip:	Phone	Date Signed:

For information and data collection only. Not valid until registered with a HERS provider.

User Instructions for Completing the NRCI-PLMB-1:

A. General Information/System Information

1. Water Heating System Name: Imported from the CERTIFICATE OF COMPLIANCE form. If there is a plumbing plan for the system, the tag name may be given on the plans (e.g. WH-1).
2. Water Heating System Configuration: Imported from the CERTIFICATE OF COMPLIANCE form. Choices are Single Dwelling Unit or Central. In the case of multi-family a multi-family building with individual water heaters should be listed as single dwelling unit.
3. Water Heating System Type: Imported from the CERTIFICATE OF COMPLIANCE form. Choices are Domestic Hot Water, Combined Hydronic, or Hydronic.
4. Number of Water Heaters: Imported from the CERTIFICATE OF COMPLIANCE form.
5. Central DHW Distribution Type: Imported from the CERTIFICATE OF COMPLIANCE form.
6. Dwelling DHW Distribution Type: Imported from the CERTIFICATE OF COMPLIANCE form.

B. Water Heater Information

1. Water Heater Type: Imported. Includes Small Storage (Gas, Electric), Large Storage (Gas Electric) Heat Pump Water Heater, Boiler, Instantaneous Large (Gas and Electric) and Instantaneous Small (Gas and Electric).
2. Fuel Type: Imported value, defining if water heater uses gas, propane, or electricity as a fuel type.
3. Enter the manufacture name: From installed equipment.
4. Enter Model Number: From AHRI database, CEC appliance efficiency database or manufacture product data sheets.
5. Number of Identical Water Heaters: From Certificate of Compliance.
6. Installed Water Heater System Efficiency: From AHRI database, CEC appliance efficiency database or manufacture product data sheets.
7. Required Minimum Water Heater System Efficiency: Based on water heater type use minimal efficiency assigned by Appliance Regulations.
8. Total Standby or Standby: For Large Storage water heaters enter value from AHRI database, CEC appliance efficiency database or manufacture product data sheets for small storage enter n/a.
9. Rated Input: From AHRI database, CEC appliance efficiency database or manufacture product data sheets
10. Pilot Energy: For Large Storage water heaters enter value from AHRI database, CEC appliance efficiency database or manufacture product data sheets, for small storage enter n/a.
11. Water Heater Tank Storage Tank Volume: From AHRI database, CEC appliance efficiency database or manufacture product data sheets.
12. Exterior Insulation on Water Heater: Value from Certificate of Compliance should match label on insulation blanket.
13. Volume of Supplemental Storage: Form Certificate of Compliance should match value on tank or manufacturer data.
14. Internal Insulation on Supplemental Storage: From Certificate of Compliance should match value on tank or manufacturer data.
15. External Insulation on Supplemental Storage Tanks: From Certificate of Compliance should match label on insulation blanket.

C. Hydronic or Combined Hydronic System Effective AFUE Efficiency

1. Pipe Diameter: From hydronic worksheet.
2. Pipe Length: From hydronic worksheet. Measured to the nearest foot.
3. Pipe Insulation: From hydronic worksheet. Value labeled on insulation
4. Pump Wattage: From hydronic worksheet. Manufacturer data, running load amps (RLA) times voltage, or labeled value
5. Effective AFUE: From Certificate of Compliance

For information and data collection only. Not valid until registered with a HERS provider

SINGLE DWELLING UNIT HOT WATER SYSTEM DISTRIBUTION

CERTIFICATE OF INSTALLATION		CF2R-PLB-02-E
Single Dwelling Unit Hot Water System Distribution		(Page 1 of 5)
Project Name:	Enforcement Agency:	Permit Number:
Dwelling Address:	City	Zip Code

A. DHW DISTRIBUTION SYSTEM		
01	Water Heating System Name:	
02	Distribution type:	

B. MANDATORY MEASURES FOR ALL DOMESTIC HOT WATER DISTRIBUTION SYSTEMS	
01	Equipment shall meet the applicable requirements of the Appliance Efficiency Regulations (Section 110.3(b)1).
02	Unfired Storage Tanks are insulated with an external R-12 or combination of R-16 internal and external Insulation. (Section 110.3(c)4).
03	All piping with a nominal diameter of 3/4 inch (19 millimeter) or larger must be insulated with R3.6 or 1" of insulation. (Section 150.0(j))
04	All hot water piping insulated from the water heater to the kitchen fixture or appliance with R3.6 or 1" of insulation (Section 150.0(j))
05	The first 5 feet of hot and cold water pipes shall be insulated from the storage tank with R3.6 or 1" of insulation. (Section 150.0(j))
06	Piping from the heating source to storage tank or between tanks must be insulated (Section 150.0(j))
07	All piping associated with a domestic hot water recirculation system regardless of the pipe diameter must be insulated (Section 150.0(j))
08	Piping from the heating source to storage tank or between tanks must be insulated (Section 150.0(j))
09	Piping buried below grade must be installed in a water proof and non-crushable casing or sleeve that allows for installation, removal, and replacement of the enclosed pipe and insulation. (Section 150.0(j))
10	All elbows and tees shall be fully insulated. (RA4.4.1)
11	Where insulation is required, no piping shall be visible due to insulation voids. (RA4.4.1)
12	All insulation shall fit tightly to the pipe (RA4.4.1)
13	The maximum length per dwelling unit of 1 inch diameter piping in a non-recirculating system is less than 15 feet (Section 150.0(j))
14	**For Gas or Propane Water Heaters:** Ensure the following are installed (Section 150.0(n)) 1. A 120V electrical receptacle is within 3 feet from the water heater and accessible with no obstructions 2. A Category III or IV vent, or a Type B vent with straight pipe between outside and water heater 3. A condensate drain no more than 2 inches higher than the base on water heater for natural draining 4. A gas supply line with capacity of at least 200,000 Btu/Hr
The responsible person's signature on this Certificate of Installation indicates the system identified on this Certificate has complied with all applicable requirements specified in this Table.	

C. (STD)-Standard Distribution System (trunk and branch systems only) << Table C appears only if (STD)- is selected in A2.>>	
01	Verification of measures B1 through B10 show compliance for standard distribution system
The responsible person's signature on this Certificate of Installation indicates the system identified on this Certificate has complied with all applicable requirements specified in this Table.	

D. (PIC)- Pipe Insulation Credit (For trunk and branch Hot Water system) << Table D appears only if (PIC)- is selected in A2.>>

For information and data collection only. Not valid until registered with a HERS provider

CERTIFICATE OF INSTALLATION		CF2R-PLB-02-E
Single Dwelling Unit Hot Water System Distribution		(Page 2 of 5)
Project Name:	Enforcement Agency:	Permit Number:
Dwelling Address:	City	Zip Code

01	All hot water piping 1” and smaller shall be insulated to R-3.6 and be 1 inch thick. Piping with a diameter larger than 1 inch shall comply with the insulation requirements in Table 120.3-A.
The responsible person’s signature on this Certificate of Installation indicates the system identified on this Certificate has complied with all applicable requirements specified in this Table.	

E. (PP)- Central Parallel Piping<< Table E appears only if (PP)- is selected in A2.>>	
01	Central manifold have 15 feet or less of pipe between manifold and water heater
02	Manifolds that include valves the manifold must be readily accessible in accordance with the plumbing code.
03	Hot water distribution system piping from the manifold to the fixtures and appliances must take the most direct path. Ex Piping from a second story manifold cannot supply the first floor
04	The hot water distribution piping must be separated by at least two inches from any other hot water supply piping
05	Hot and cold water supply piping must be separated by at least six inches or the hot water supply piping must be insulated. with 1” at a minimum R3.6 based (from TABLE 120.3-A.
The responsible person’s signature on this Certificate of Installation indicates the system identified on this Certificate has complied with all applicable requirements specified in this Table.	

F. (IPBG)- Insulated and Protected Pipe Below Grade<< Table F appears only if (IPBG)- is selected in A2.>>	
01	Verification of measures B1 through B14
The responsible person’s signature on this Certificate of Installation indicates the system identified on this Certificate has complied with all applicable requirements specified in this Table.	

G. (R-ND)- Recirculation non demand controls << Table G appears only if (R-ND)- is selected in A2.>>	
01	If more than one loop installed each loop shall have its own pump and controls
02	Automatic Air release valve is installed on the inlet side of the recirculation pump per Section 110.3(c)5A.
03	A check valve is located between the recirculation pump and the water heater per Section 110.3(c)5B.
04	Hose bibb is installed between the pump and the water heating equipment with an isolation valve between the hose bibb and the water heating equipment per Section 110.3(c)5C.
05	Isolation valves are installed on both sides of the pump. One of the isolation valves may be the same isolation valve as in item 4 above per Section 110.3(c)5D.
06	The cold water supply piping and the recirculation loop piping is not connected to the hot water storage tank drain port per Section 110.3(c)5E.
07	A check valve is installed on the cold water supply line between the hot water system and the next closest tee on the cold water supply per Section 110.3(c)5F.
The responsible person’s signature on this Certificate of Installation indicates the system identified on this Certificate has complied with all applicable requirements specified in this Table.	

For information and data collection only. Not certified until registered with a HERS provider

CERTIFICATE OF INSTALLATION		CF2R-PLB-02-E
Single Dwelling Unit Hot Water System Distribution		(Page 3 of 5)
Project Name:	Enforcement Agency:	Permit Number:
Dwelling Address:	City	Zip Code

H.(RDRmc)-Demand Recirculation – Manual Control << Table H appears only if (RDRmc)- is selected in A2>>	
01	Verify the controlled recirculation systems operate "on-demand", meaning that pump operation shall be initiated shortly prior to the hot water draw. The controls shall operate on the principal of shutting off the pump with a sensed rise in pipe temperature (Delta-T)
02	If more than one loop installed each loop shall have its own pump and controls
03	Verify that the pump, demand controls and thermo-sensor are present
04	Manual switches are located in the kitchen, all bathrooms, and any hot water use location that is at least 20 feet (measured along the hot water piping) from the water heater
05	Manual controlled systems may be activated by wired or wireless button mechanisms
06	Automatic Air release valve is installed on the inlet side of the recirculation pump per Section 110.3(c)5A.
07	A check valve is located between the recirculation pump and the water heater per Section 110.3(c)5B.
08	Hose bibb is installed between the pump and the water heating equipment with an isolation valve between the hose bibb and the water heating equipment per Section 110.3(c)5C.
09	Isolation valves are installed on both sides of the pump. One of the isolation valves may be the same isolation valve as in item 8 above per Section 110.3(c)5D.
10	The cold water supply piping and the recirculation loop piping is not connected to the hot water storage tank drain port per Section 110.3(c)5E.
11	A check valve is installed on the cold water supply line between the hot water system and the next closest tee on the cold water supply per Section 110.3(c)5F.
The responsible person's signature on this Certificate of Installation indicates the system identified on this Certificate has complied with all applicable requirements specified in this Table.	

For information and data collection only. Not valid until registered with a HERS provider

CERTIFICATE OF INSTALLATION		CF2R-PLB-02-E
Single Dwelling Unit Hot Water System Distribution		(Page 4 of 5)
Project Name:	Enforcement Agency:	Permit Number:
Dwelling Address:	City	Zip Code

I. (RDRsc)-Demand Recirculation – Sensor Control << Table I appears only if (RDRsc)- is selected in A2.>>	
01	Verify the controlled recirculation systems operate "on-demand", meaning that pump operation shall be initiated shortly prior to the hot water draw. The controls shall operate on the principal of shutting off the pump with a sensed rise in pipe temperature (Delta-T)
02	If more than one loop installed each loop shall have its own pump and controls
03	Verify that the pump, demand controls and thermo-sensor are present
04	Sensor controls are located in the kitchen, all bathrooms, and any hot water use location that is at least 20 feet (measured along the hot water piping) from the water heater
05	Automatic Air release valve is installed on the inlet side of the recirculation pump per Section 110.3(c)5A.
06	A check valve is located between the recirculation pump and the water heater per Section 110.3(c)5B.
07	Hose bibb is installed between the pump and the water heating equipment with an isolation valve between the hose bibb and the water heating equipment per Section 110.3(c)5C.
08	Isolation valves are installed on both sides of the pump. One of the isolation valves may be the same isolation valve as in item 7 above per Section 110.3(c)5D.
09	The cold water supply piping and the recirculation loop piping is not connected to the hot water storage tank drain port per Section 110.3(c)5E.
10	A check valve is installed on the cold water supply line between the hot water system and the next closest tee on the cold water supply per Section 110.3(c)5F.
The responsible person's signature on this Certificate of Installation indicates the system identified on this Certificate has complied with all applicable requirements specified in this Table.	

For information and data collection only. Not valid until registered with a HERS provider

CERTIFICATE OF INSTALLATION		CF2R-PLB-02-E
Single Dwelling Unit Hot Water System Distribution		(Page 5 of 5)
Project Name:	Enforcement Agency:	Permit Number:
Dwelling Address:	City	Zip Code

DOCUMENTATION AUTHOR'S DECLARATION STATEMENT

1. I certify that this Certificate of Installation documentation is accurate and complete.

Documentation Author Name:	Documentation Author Signature:
Documentation Author Company Name:	Date Signed:
Address:	CEA/HERS Certification Identification (If applicable):
City/State/Zip:	Phone:

RESPONSIBLE PERSON'S DECLARATION STATEMENT

I certify the following under penalty of perjury, under the laws of the State of California:

1. The information provided on this Certificate of Installation is true and correct.
2. I am eligible under Division 3 of the Business and Professions Code in the applicable classification to accept responsibility for the system design, construction, or installation of features, materials, components, or manufactured devices for the scope of work identified on this Certificate of Installation, and attest to the declarations in this statement (responsible builder/installer), otherwise I am an authorized representative of the responsible builder/installer.
3. The constructed or installed features, materials, components or manufactured devices (the installation) identified on this Certificate of Installation conforms to all applicable codes and regulations, and the installation conforms to the requirements given on the plans and specifications approved by the enforcement agency.
4. I reviewed a copy of the Certificate of Compliance approved by the enforcement agency that identifies the specific requirements for the scope of construction or installation identified on this Certificate of Installation, and I have ensured that the requirements that apply to the construction or installation have been met.
5. I will ensure that a registered copy of this Certificate of Installation shall be posted, or made available with the building permit(s) issued for the building, and made available to the enforcement agency for all applicable inspections. I understand that a registered copy of this Certificate of Installation is required to be included with the documentation the builder provides to the building owner at occupancy.

Responsible Builder/Installer Name:	Responsible Builder/Installer Signature:	
Company Name: (Installing Subcontractor or General Contractor or Builder/Owner)	Position With Company (Title):	
Address:	CSLB License:	
City/State/Zip:	Phone	Date Signed:

For information and data collection only. Not valid until registered with a HERS provider

A. DHW DISTRIBUTION SYSTEM

1. Water Heating System Name: From Certificate of Compliance
2. Distribute type: Based on the system being installed, pick from one of the following - Standard Distribution System (STD), Pipe Insulation Credit (PIC), Central Parallel Piping (PP)Compact Hot Water Distribution System (CHWDS), Recirculation non demand controls (R-ND), Demand Recirculation – Manual Control (R-DRmc), Demand Recirculation – Sensor Control (RDRsc)

B. MANDATORY MEASURES FOR ALL DOMESTIC HOT WATER DISTRIBUTION SYSTEMS

Ensure all mandatory requirements are met.

C. (STD)-Standard Distribution System (trunk and branch systems only)

1. The Standard Distribution System design requires that hot water distribution piping meets the requirements of Proper Installation of Pipe Insulation R4.4.1

D. (PIC)- Pipe Insulation Credit (For trunk and branch Hot Water system)

1. All piping in the hot water distribution system must be insulated from the water heater to each fixture or appliance. Insulation shall be installed in accordance with the provisions of Proper Installation of Pipe Insulation R4.4.1.

E. (PP)- Central Parallel Piping

This hot water distribution system is comprised of one or more manifolds located relatively close to the water heater and pipes running from the manifold to individual fixtures and appliances. The manifolds may have valves for each pipe running from the manifold to individual fixtures and appliances. These valves must be readily accessible in accordance with the plumbing code. The measured length of pipe from the water heater each central manifold shall not exceed 15 feet (measured to the nearest half foot). The hot water distribution system piping from the manifold to the fixtures and appliances must take the most direct path. For example, in a house with more than 1-story and the water heater in the garage, this requirement would exclude running hot water supply piping from the manifold to the attic, and then running the line back down to a first floor point of use. The hot water distribution piping must be separated by at least two inches from any other hot water supply piping, and at least six inches from any cold water supply piping or the hot water supply piping must be insulated based on the conductivity range in TABLE 120.3-A and the insulation level shall be selected from the fluid temperature range based on the thickness requirements in TABLE 120.3-A. Other hot water piping shall be insulated to a level that meets the requirements of §150.0(j) and be installed in accordance with Proper Installation of Pipe Insulation R4.4.1.

F. (IPBG)- Insulated and Protected Pipe Below Grade

G. (R-ND)- Recirculation non demand controls

All recirculation controls with the exception of demand recirculation control systems fall under this category.
More than one circulation loop may be installed. Each loop shall have its own pump and controls.
The active control shall be either: timer, temperature, or time and temperature. Timers shall be set to less than 24 hours. The temperature sensor shall be connected to the piping and to the controls for the pump.

H.(RDRmc)-Demand Recirculation – Manual Control

Demand controlled recirculation systems shall operate "on-demand", meaning that pump operation shall be initiated shortly prior to the hot water draw. The controls shall operate on the principal of shutting off the pump with a sensed rise in pipe temperature (Delta-T). For this measure a manual switch is used to activate the pump.

1. More than one circulation loop may be installed. Each loop shall have its own pump and controls.
2. Manual controls shall be located in the kitchen, bathrooms, and any hot water use location that is at least 20 feet (measured along the hot water piping) from the water heater.
3. Manual controlled systems may be activated by wired or wireless mechanisms, Manual controls shall have standby power of 1 watt or less.
4. Pump and demand control placement meets one of the following criteria.
    - When a dedicated return line has been installed the pump, demand controls and thermo-sensor are installed at the end of the supply portion of the recirculation loop (typically under a sink); or

For information and data collection only. Not valid until registered with a HERS provider

- The pump and demand controls are installed on the return line near the water heater and the thermo sensor is installed in an accessible location as close to the end of the supply portion of the recirculation loop as possible (typically under a sink), or
- When the cold water line is used as the return, the pump, demand controls and thermo-sensor is installed in an accessible location at the end of supply portion of the hot water distribution line (typically under a sink).

5. Insulation is not required on the cold water line when it is used as the return.
6. Demand controls shall be able to shut off the pump in accordance with these three methods:
    - After the pump has been activated, the controls shall allow the pump to operate until the water temperature at the thermo-sensor rises not more than 10ºF (5.6 ºC) above the initial temperature of the water in the pipe, or
    - The controls shall not allow the pump to operate when the temperature in the pipe exceeds 102ºF (38.9 ºC).
    - The controls shall limit pump operation to a maximum of 5 minutes following any activation. This is provided in the event that the normal means of shutting off the pump have failed.

I. (RDRsc)-Demand Recirculation – Sensor Control

Demand controlled recirculation systems shall operate "on-demand", meaning that pump operation shall be initiated shortly prior to the hot water draw. The controls shall operate on the principal of shutting off the pump with a sensed rise in pipe temperature (Delta-T). For this measure a sensor control is used to activate the pump rather than a manual control.

1. More than one circulation loop may be installed. Each loop shall have its own pump and controls.
2. Sensor controls shall be located in the kitchen, bathrooms, and any hot water use location that is at least 20 feet (measured along the hot water piping) from the water heater.
3. Sensor controlled systems may be activated by wired or wireless mechanisms, including motion sensors, door switches and flow switches. Sensors controls shall have standby power of 1 watt or less.
4. Pump and demand control placement meets one of the following criteria.
    - When a dedicated return line has been installed the pump, demand controls and thermo-sensor are installed at the end of the supply portion of the recirculation loop (typically under a sink); or
    - The pump and demand controls are installed on the return line near the water heater and the thermosensor is installed in an accessible location as close to the end of the supply portion of the recirculation loop as possible (typically under a sink),
    - When the cold water line is used as the return, the pump, demand controls and thermo-sensor is installed in an accessible location at the end of supply portion of the hot water distribution line (typically under a sink).
5. Insulation is not required on the cold water line when it is used as the return.
6. Demand controls shall be able to shut off the pump in accordance with these three methods:
    - After the pump has been activated, the controls shall allow the pump to operate until the water temperature at the thermo-sensor rises not more than 10ºF (5.6 ºC) above the initial temperature of the water in the pipe, or
    - The controls shall not allow the pump to operate when the temperature in the pipe exceeds 102ºF (38.9 ºC).
    - The controls shall limit pump operation to a maximum of 5 minutes following any activation. This is provided in the event that the normal means of shutting off the pump have failed.

For information and data collection only. Not valid until registered with a HERS provider.

MULTIFAMILY CENTRAL HOT WATER SYSTEM DISTRIBUTION

CERTIFICATE OF INSTALLATION		CF2R-PLB-03-E
Multifamily Central Hot Water System Distribution		(Page 1 of 3)
Project Name:	Enforcement Agency:	Permit Number:
Dwelling Address:	City	Zip Code

A. DHW DISTRIBUTION SYSTEM		
01	Distribution type	
02	Dwelling Unit distribution type:	

B. INSTALLER VERIFICATION REQUIREMENTS FOR ALL CENTRAL DOMESTIC HOT WATER RECIRCULATION SYSTEMS	
01	Outlet temperature controls: On systems that have a total capacity greater than 167,000 Btu/hr, outlets that require higher than service water temperatures as listed in the ASHRAE Handbook shall have separate remote heaters, heat exchangers, or boosters to supply the outlet with the higher temperature. (Section 110.3 (c)1)
02	Controls for hot water distribution systems: Service hot water systems with circulating pumps or with electrical heat trace systems shall be capable of automatically turning off the system. (Section 110.3(c)2).
03	Unfired Storage Tanks are insulated with an external R-12 or combination of R-16 internal and external Insulation. (Section 110.3(c)4).
04	Automatic Air release valve is installed on the inlet side of the recirculation pump per Section 110.3(c)5A.
05	A check valve is located between the recirculation pump and the water heater per Section 110.3(c)5B.
06	Hose bibb is installed between the pump and the water heating equipment with an isolation valve between the hose bibb and the water heating equipment per Section 110.3(c)5C.
07	Isolation valves are installed on both sides of the pump. One of the isolation valves may be the same isolation valve as in item 6 above per Section 110.3(c)5D.
08	The cold water supply piping and the recirculation loop piping is not connected to the hot water storage tank drain port per Section 110.3(c)5E.
09	A check valve is installed on the cold water supply line between the hot water system and the next closest tee on the cold water supply per Section 110.3(c)5F.
10	System must have a dedicated return line which is insulated. (Section 120.3)
11	All hot water pipes are insulated per the insulation requirements of Table 120.3A(Section 120.3)(1" insulation for 1" and smaller pipes. 1.5" insulation for 1 to 1.5 inch pipes)
12	Where insulation is installed there is no piping visible due to insulation voids
13	All elbows and tees fully insulated
The responsible person's signature on this Certificate of Installation indicates the system identified on this Certificate has complied with all applicable requirements specified in this Table.	

C. Multiple Dwelling Units – Recirculation Temperature Modulation Control << Table C appears only if C is selected in A2>>	
01	Controls have been installed that have the capability of modulating water temperature. These controls must the capability of using historical use patterns to adjust water temperature.
02	Daily hot water supply temperature reduction (sum of temperature reduction by the control in each hour within a 24-hour period)shall be more than 50 degress Fahrenheit
The responsible person's signature on this Certificate of Installation indicates the system identified on this Certificate has complied with all applicable requirements specified in this Table.	

For information and data collection only. Not valid until registered with a HERS provider

CERTIFICATE OF INSTALLATION		CF2R-PLB-03-E
Multifamily Central Hot Water System Distribution		(Page 2 of 3)
Project Name:	Enforcement Agency:	Permit Number:
Dwelling Address:	City	Zip Code

D. Multiple Dwelling Units – Recirculation Continuous Monitoring Systems << Table C appears only if D is selected in A2>>	
01	The water heating system must have remote sensor controls with telepathy capabilities installed.
02	Monitoring system must record no less frequently than hourly measurement of key system operation parameters, including hot water supply and return temperatures, and status of gas valve relays
03	Current contract must be available that demonstrate the system will be monitored.
The responsible person's signature on this Certificate of Installation indicates the system identified on this Certificate has complied with all applicable requirements specified in this Table.	

E. Multiple Dwelling Units – Demand Recirculation << Table E appears only if E is selected in A2>>	
01	Verify the controlled recirculation systems operate "on-demand", meaning that pump operation shall be initiated shortly prior to the hot water draw. The controls shall operate on the principal of shutting off the pump with a sensed rise in pipe temperature (Delta-T)
02	If more than one loop installed each loop shall have its own pump and controls
03	Verify that the pump, demand controls and thermo-sensor are present
04	Systems may be activated by wired or wireless button mechanisms
The responsible person's signature on this Certificate of Installation indicates the system identified on this Certificate has complied with all applicable requirements specified in this Table.	

F. Other << Table F appears only if F is selected in A2>>	
01	Verification of measures B1 through B13
The responsible person's signature on this Certificate of Installation indicates the system identified on this Certificate has complied with all applicable requirements specified in this Table.	

For information and data collection only. Not valid until registered with a HERS provider

CERTIFICATE OF INSTALLATION		CF2R-PLB-03-E
Multifamily Central Hot Water System Distribution		(Page 3 of 3)
Project Name:	Enforcement Agency:	Permit Number:
Dwelling Address:	City	Zip Code

DOCUMENTATION AUTHOR'S DECLARATION STATEMENT	
1. I certify that this Certificate of Installation documentation is accurate and complete.	
Documentation Author Name:	Documentation Author Signature:
Documentation Author Company Name:	Date Signed:
Address:	CEA/HERS Certification Identification (If applicable):
City/State/Zip:	Phone:

RESPONSIBLE PERSON'S DECLARATION STATEMENT

I certify the following under penalty of perjury, under the laws of the State of California:

1. The information provided on this Certificate of Installation is true and correct.
2. I am eligible under Division 3 of the Business and Professions Code in the applicable classification to accept responsibility for the system design, construction, or installation of features, materials, components, or manufactured devices for the scope of work identified on this Certificate of Installation, and attest to the declarations in this statement (responsible builder/installer), otherwise I am an authorized representative of the responsible builder/installer.
3. The constructed or installed features, materials, components or manufactured devices (the installation) identified on this Certificate of Installation conforms to all applicable codes and regulations, and the installation conforms to the requirements given on the plans and specifications approved by the enforcement agency.
4. I reviewed a copy of the Certificate of Compliance approved by the enforcement agency that identifies the specific requirements for the scope of construction or installation identified on this Certificate of Installation, and I have ensured that the requirements that apply to the construction or installation have been met.
5. I will ensure that a registered copy of this Certificate of Installation shall be posted, or made available with the building permit(s) issued for the building, and made available to the enforcement agency for all applicable inspections. I understand that a registered copy of this Certificate of Installation is required to be included with the documentation the builder provides to the building owner at occupancy.

Responsible Builder/Installer Name:	Responsible Builder/Installer Signature:	
Company Name: (Installing Subcontractor or General Contractor or Builder/Owner)	Position With Company (Title):	
Address:	CSLB License:	
City/State/Zip:	Phone	Date Signed:

For information and data collection only. Not valid until registered with a HERS provider

A. DHW DISTRIBUTION SYSTEM

1. Water Heating System Name: From Certificate of Compliance
2. Distribute type: Based on the system being installed, pick from one of the following - Standard Distribution System (STD), Pipe Insulation Credit (PIC), Central Parallel Piping (PP)Compact Hot Water Distribution System (CHWDS), Recirculation non demand controls (R-ND), Demand Recirculation – Manual Control (R-DRmc), Demand Recirculation – Sensor Control (RDRsc)

B. MANDATORY MEASURES FOR ALL DOMESTIC HOT WATER DISTRIBUTION SYSTEMS

Ensure all mandatory requirements are met.

C. Multiple Dwelling Units – Recirculation Temperature Modulation Control

A recirculation temperature modulation control shall reduce the hot water supply temperature when hot water demand is determined to be low by the control system. The control system may use a fixed control schedule or dynamic control schedules based measurements of hot water demand. The daily hot water supply temperature reduction, which is defined as the sum of temperature reduction by the control in each hour within a 24-hour period, shall be more than 50 degrees Fahrenheit to qualify for the energy savings credit. Qualifying equipment shall be listed with the Commission.

Recirculation systems shall also meet the requirements of §110.3.

D. Multiple Dwelling Units – Recirculation Continuous Monitoring Systems

Systems that qualify as a recirculation continuous monitoring systems for domestic hot water systems serving multiple dwelling units shall record no less frequently than hourly measurements of key system operation parameters, including hot water supply temperatures, hot water return temperatures, and status of gas valve relays of water heating equipment. The continuous monitoring system shall automatically alert building operators of abnormalities identified from monitoring results. Qualifying equipment or services shall be listed with the Commission.

Recirculation systems shall also meet the requirements of §110.3.

E. Multiple Dwelling Units – Demand Recirculation

Demand controlled recirculation systems shall operate "on-demand", meaning that pump operation shall be initiated shortly prior to, or by a hot water draw. The controls shall operate on the principal of shutting off the pump with a sensed rise in pipe temperature (Delta-T). For this measure sensor or manual controls may be used to activate the pump(s).

Manual or sensor shall be installed and if powered, have standby power of 1 watt or less. Controls may be located in individual units or on the loop. Controls may be activated by wired or wireless mechanisms, including buttons, motion sensors, door switches and flow switches.

Pump and control placement shall meet one of the following criteria:

1. When a dedicated return line has been installed the pump, controls and thermo-sensor are installed at the end of the supply portion of the recirculation loop; or

2. The pump and controls are installed on the dedicated return line near the water heater and the thermo-sensor is installed in an accessible location as close to the end of the supply portion of the recirculation loop as possible, or

3. When the cold water line is used as the return, the pump, demand controls and thermosensor shall be installed in an accessible location at the end of supply portion of the hot water distribution line (typically under a sink).

Insulation is not required on the cold water line when it is used as the return.

Demand controls shall be able to shut off the pump in accordance with these three methods:

After the pump has been activated, the controls shall allow the pump to operate until the water temperature at the thermo-sensor rises not more than 10ºF (5.6 ºC) above the initial temperature of the water in the pipe, or

The controls shall not allow the pump to operate when the temperature in the pipe exceeds 102ºF (38.9 ºC).

For information and data collection only. Not valid until registered with a HERS provider

The controls shall limit pump operation to a maximum of 10 minutes following any activation. This is provided in the event that the normal means of shutting off the pump have failed.

Recirculation systems shall also meet the requirements of §110.3.

F. Other

Use for any system that does not meet the installation requirements listed in RA3 and RA4 for the specific system type in any way. The compliance run will be done using the Non Compliant Installation Distribution Multiplier.

For information and data collection only. Not valid until registered with a HERS provider

CERTIFICATE OF INSTALLATION		CF2R-PLB-04-E
Pool And Spa Heating Systems		(Page 1 of 2)
Project Name:	Enforcement Agency:	Permit Number:
Dwelling Address:	City	Zip Code

A. SYSTEMS AND EQUIPMENT (SECTION 114.0(A))	
01	Heater has a thermal efficiency that complies with the Appliance Efficiency Regulations.
02	Has a readily accessible on-off switch mounted outside of the heater.
03	Weatherproof plate or card containing operating instructions for the pool or spa heater.
04	No electric resistance heating except for listed package units that has fully insulated enclosures and tight fitting covers that are insulated to at least R-6. Or if documentation is provided that at least 60 % of the annual heating energy is from site solar energy or recovered energy.
05	Heating system has no pilot light.
The responsible person's signature on this Certificate of Installation indicates the system identified on this Certificate has complied with all applicable requirements specified in this Table.	

B. INSTALLATION (SECTION 114.0(B))	
01	System is installed with at least 36" of pipe between the filter and heater, or dedicated suction and return lines, or built-in or built-up connections for future solar heating.
02	A cover for outdoor pools or spas that have a heat pump or gas heater.
03	Pool system has directional inlets to adequately mix the pool water
04	Time switch which will allow the pump to be set or programmed to run during off-peak periods only
The responsible person's signature on this Certificate of Installation indicates the system identified on this Certificate has complied with all applicable requirements specified in this Table.	

C. PUMP SIZING AND FLOW RATE SPECIFICATION (SECTION 150.0(P))		
01	The pump specified is listed in the CEC database of certified pool pumps.	
02	The pump flow rate shall be calculated based on pool sizing table below.	
03	The pump is capable of operating at 2 or more speeds (not applicable if pump is less than 1 horsepower).	
04	Each auxiliary pool load is served by either a separate pump, or the system is served by a multi-speed pump.	
05	Calculated volume of pool (gallons).	
06	Return Pipe Diameter (inches).	
07	Suction Pipe Diameter (inches).	
08	Filter Type (Cartridge, Sand, DE).	
09	Filter Surface Area (ft^2).	
10	Max Pump Flow (gpm).	
The responsible person's signature on this Certificate of Installation indicates the system identified on this Certificate has complied with all applicable requirements specified in this Table.		

D. SYSTEM PIPING	
01	The suction side pipe is straight for at least 4 pipe diameters before entering the pump (See table below for the required straight run lengths for various pipe sizes).
02	The design uses low pressure drop fittings (sweep 90s)
The responsible person's signature on this Certificate of Installation indicates the system identified on this Certificate has complied with all applicable requirements specified in this Table.	

For information and data collection only. Not valid until registered with a HERS provider

CERTIFICATE OF INSTALLATION		CF2R-PLB-04-E
Pool And Spa Heating Systems		(Page 2 of 2)
Project Name:	Enforcement Agency:	Permit Number:
Dwelling Address:	City	Zip Code

E. FILTRATION EQUIPMENT	
01	If a backwash valve is used: The diameter of the backwash multi-port valve is 2 inches or as large as the circulation pipe, whichever is greater
The responsible person's signature on this Certificate of Installation indicates the system identified on this Certificate has complied with all applicable requirements specified in this Table.	

DOCUMENTATION AUTHOR'S DECLARATION STATEMENT

1. I certify that this Certificate of Installation documentation is accurate and complete.

Documentation Author Name:	Documentation Author Signature:
Documentation Author Company Name:	Date Signed:
Address:	CEA/HERS Certification Identification (If applicable):
City/State/Zip:	Phone:

RESPONSIBLE PERSON'S DECLARATION STATEMENT

I certify the following under penalty of perjury, under the laws of the State of California:

1. The information provided on this Certificate of Installation is true and correct.
2. I am eligible under Division 3 of the Business and Professions Code in the applicable classification to accept responsibility for the system design, construction, or installation of features, materials, components, or manufactured devices for the scope of work identified on this Certificate of Installation, and attest to the declarations in this statement (responsible builder/installer), otherwise I am an authorized representative of the responsible builder/installer.
3. The constructed or installed features, materials, components or manufactured devices (the installation) identified on this Certificate of Installation conforms to all applicable codes and regulations, and the installation conforms to the requirements given on the plans and specifications approved by the enforcement agency.
4. I reviewed a copy of the Certificate of Compliance approved by the enforcement agency that identifies the specific requirements for the scope of construction or installation identified on this Certificate of Installation, and I have ensured that the requirements that apply to the construction or installation have been met.
5. I will ensure that a registered copy of this Certificate of Installation shall be posted, or made available with the building permit(s) issued for the building, and made available to the enforcement agency for all applicable inspections. I understand that a registered copy of this Certificate of Installation is required to be included with the documentation the builder provides to the building owner at occupancy.

Responsible Builder/Installer Name:	Responsible Builder/Installer Signature:	
Company Name: (Installing Subcontractor or General Contractor or Builder/Owner)	Position With Company (Title):	
Address:	CSLB License:	
City/State/Zip:	Phone	Date Signed:

For information and data collection only. Not valid until registered with a HERS provider

A. SYSTEMS AND EQUIPMENT (SECTION 114.0(A))

Before any pool or spa heating system or equipment may be installed, the manufacturer must certify to the Energy Commission that the system or equipment complies with §110.4 and §110.5. The requirements include minimum heating efficiency according to Appliance Efficiency Regulations, an on-off switch outside the heater, permanent and weatherproof operating instructions, no continuous pilot light, and no electric resistance heating

B. INSTALLATION (SECTION 114.0(B))

A time switch or similar control mechanism must be installed as part of the pool water circulation control system that will allow all pumps to be set or programmed to run only during the off-peak electric demand period and for the minimum time necessary to maintain the water in the condition required by applicable public health standards

C. PUMP SIZING AND FLOW RATE SPECIFICATION (SECTION 150.0(P))

The pool filtration flow rate may not be greater than the rate needed to turn over the pool water volume in 6 hours or 36 gpm, whichever is greater. Calculate Max Flow Rate using the following equation:

$$\text{Max Flow Rate (gpm)} = \frac{\text{Pool Volume (gallons)}}{360\text{min.}}$$

Pool piping must be sized according to the maximum flow rate needed for all auxiliary loads. Refer to Table C below for the minimum return and suction pipe diameter, minimum filter area, and the maximum pump flow rate correspond to the pool volume. The maximum velocity allowed is 8 fps in the return line and 6 fps in the suction line.

D. SYSTEM PIPING

There must be a length of straight pipe that is greater than or equal to at least 4 inches pipe diameters installed before the pump. Refer to Table D below for the required pipe length. Traditional hard 90° elbows are not allowed. All elbows must be sweep elbows or a type of elbow that has a pressure drop less than the pressure drop of straight pipe with a length of 30 pipe diameters.

E. FILTRATION EQUIPMENT

Backwash valves must be sized to the diameter of the return pipe or two inches, whichever is greater. Multiport backwash valves have a high pressure drop and are discouraged.

Table C
Pool sizing (Values are based on a maximum allowable turnover rate of 6- hours)
Note: *For pumps greater than 1 hp. The maximum Pump Flow is the lowest speed default filtration*

Max Pool Volume (gallons)	Min Pipe D or Greater (inches)		Min Filter Area or more (square feet)			Max Pump Flow (gpm)
	Return	Suction	Cartridge	Sand	DE	
13,000	1.5	1.5	100	2.4	20	36
17,000	1.5	2	130	3.1	25	47
21,000	2	2	160	3.9	30	58
28,000	2	2.5	210	5.2	40	78
42,000	2.5	3	320	7.8	60	117
48,000	3	3	360	8.9	70	133

For information and data collection only. Not valid until registered with a HERS provider.

Table D Pipe Diameter/Pipe Length	
Pipe Diameter (inch)	Required Pipe Length leading into pump (inch)
1.5	6
2	8
2.5	10
3	12

For information and data collection only. Not valid until registered with a HERS provider

SINGLE DWELLING UNIT HOT WATER SYSTEM DISTRIBUTION

CERTIFICATE OF INSTALLATION		CF2R-PLB-20-H
Single Dwelling Unit Hot Water System Distribution		(Page 1 of 4)
Project Name:	Enforcement Agency:	Permit Number:
Dwelling Address:	City	Zip Code

A. General System Information		
01	Water Heating System Name:	
02	Dwelling Unit Distribution Type:	

B. MANDATORY MEASURES FOR ALL DOMESTIC HOT WATER DISTRIBUTION SYSTEMS	
01	Equipment shall meet the applicable requirements of the Appliance Efficiency Regulations (Section 110.3(b)1).
02	Unfired Storage Tanks are insulated with an external R-12 or combination of R-16 internal and external Insulation. (Section 110.3(c)4).
03	All piping with a nominal diameter of 3/4 inch (19 millimeter) or larger must be insulated with R3.6 or 1" of insulation. (Section 150.0(j))
04	All hot water piping insulated from the water heater to the kitchen fixture or appliance with R3.6 or 1" of insulation (Section 150.0(j))
05	The first 5 feet of hot and cold water pipes shall be insulated from the storage tank with R3.6 or 1" of insulation. (Section 150.0(j))
06	Piping from the heating source to storage tank or between tanks must be insulated (Section 150.0(j))
07	All piping associated with a domestic hot water recirculation system regardless of the pipe diameter must be insulated (Section 150.0(j))
08	Piping from the heating source to storage tank or between tanks must be insulated (Section 150.0(j))
09	Piping buried below grade must be installed in a water proof and non-crushable casing or sleeve that allows for installation, removal, and replacement of the enclosed pipe and insulation. (Section 150.0(j))
10	All elbows and tees shall be fully insulated. (RA4.4.1)
11	Where insulation is required, no piping shall be visible due to insulation voids. (RA4.4.1)
12	All insulation shall fit tightly to the pipe (RA4.4.1)
13	The maximum length per dwelling unit of 1 inch diameter piping in a non-recirculating system is less than 15 feet (Section 150.0(j))
14	**For Gas or Propane Water Heaters:** Ensure the following are installed (Section 150.0(n)) 1. A 120V electrical receptacle is within 3 feet from the water heater and accessible with no obstructions 2. A Category III or IV vent, or a Type B vent with straight pipe between outside and water heater 3. A condensate drain no more than 2 inches higher than the base on water heater for natural draining 4. A gas supply line with capacity of at least 200,000 Btu/Hr
The responsible person's signature on this Certificate of Installation indicates the system identified on this Certificate has complied with all applicable requirements specified in this Table.	

C. (PIC-H) HERS-Verified Pipe Insulation Credit	
01	HERS verification of All hot water piping 1" and smaller shall be insulated to R-3.6 and be 1 inch thick. Piping with a diameter larger than 1 inch shall comply with the insulation requirements in Table 120.3-A.
The responsible person's signature on this Certificate of Installation indicates the system identified on this Certificate has complied with all applicable requirements specified in this Table.	

For information and data collection only. Not valid until registered with a HERS provider

CERTIFICATE OF INSTALLATION		CF2R-PLB-20-H
Single Dwelling Unit Hot Water System Distribution		(Page 2 of 4)
Project Name:	Enforcement Agency:	Permit Number:
Dwelling Address:	City	Zip Code

D. (PP-H)-HERS-Verified Parallel Piping	
01	Central manifold have 8 feet or less of pipe between manifold and water heater
02	Manifolds that include valves the manifold must be readily accessible in accordance with the plumbing code.
03	Hot water distribution system piping from the manifold to the fixtures and appliances must take the most direct path. Ex Piping from a second story manifold cannot supply the first floor
04	The hot water distribution piping must be separated by at least two inches from any other hot water supply piping
The responsible person's signature on this Certificate of Installation indicates the system identified on this Certificate has complied with all applicable requirements specified in this Table.	

E. (CHWDS-H) HERS-Verified Compact Hot Water Distribution System		
01	Number of floors in the building	
02	Conditioned floor area	
03	Value for HERS verification –The maximum measured distance in feet of a straight line from the water heater to the furthest point of use For the floor area served.	
The responsible person's signature on this Certificate of Installation indicates the system identified on this Certificate has complied with all applicable requirements specified in this Table.		

F. (POU-H)-HERS-Verified Point of Use		
01	Determine the allowed length of piping for the longest run terminating in: 3/8" - For only one pipe size = 15ft For multiple pipe sizes the allowed length of 3/8" piping is 7.5ft, of ½" piping is 5ft, and ¾" piping is 2.5ft. ½" - For only one pipe size = 10ft For multiple pipe sizes the allowed length of ½" piping is 5ft, and ¾" piping is 2.5ft. ¾" - For only one pipe size = 5ft	
02	Value for HERS verification –The maximum measured distance in feet of pipe from a water heater to the any point of use.	
The responsible person's signature on this Certificate of Installation indicates the system identified on this Certificate has complied with all applicable requirements specified in this Table.		

G. (RDRmc-H) - HERS-Verified Demand Recirculation Manual Control	
01	Verify the controlled recirculation systems operate "on-demand", meaning that pump operation shall be initiated shortly prior to the hot water draw. The controls shall operate on the principal of shutting off the pump with a sensed rise in pipe
02	If more than one loop installed each loop shall have its own pump and controls
03	Verify that the pump, demand controls and thermo-sensor are present
04	Manual switches are located in the kitchen, all bathrooms, and any hot water use location that is at least 20 feet (measured along the hot water piping) from the water heater
05	Manual controlled systems may be activated by wired or wireless button mechanisms
06	Automatic Air release valve is installed on the inlet side of the recirculation pump per Section 110.3(c)5A.
07	A check valve is located between the recirculation pump and the water heater per Section 110.3(c)5B.
08	Hose bibb is installed between the pump and the water heating equipment with an isolation valve between the hose bibb and the water heating equipment per Section 110.3(c)5C.

For information and data collection only. Not valid until registered with a HERS provider

CERTIFICATE OF INSTALLATION		CF2R-PLB-20-H
Single Dwelling Unit Hot Water System Distribution		(Page 3 of 4)
Project Name:	Enforcement Agency:	Permit Number:
Dwelling Address:	City	Zip Code

09	Isolation valves are installed on both sides of the pump. One of the isolation valves may be the same isolation valve as in item 8 above per Section 110.3(c)5D.
10	The cold water supply piping and the recirculation loop piping is not connected to the hot water storage tank drain port per Section 110.3(c)5E.
11	A check valve is installed on the cold water supply line between the hot water system and the next closest tee on the cold water supply per Section 110.3(c)5F.
The responsible person's signature on this Certificate of Installation indicates the system identified on this Certificate has complied with all applicable requirements specified in this Table.	

H.(RDRsc-H) HERS-Verified Demand Recirculation Sensor Control<< Table H appears only if (RDRsc-H)- is selected in A2.>>	
01	Verify the controlled recirculation systems operate "on-demand", meaning that pump operation shall be initiated shortly prior to the hot water draw. The controls shall operate on the principal of shutting off the pump with a sensed rise in pipe
02	If more than one loop installed each loop shall have its own pump and controls
03	Verify that the pump, demand controls and thermo-sensor are present
04	Sensor controls are located in the kitchen, all bathrooms, and any hot water use location that is at least 20 feet (measured
05	Sensor controlled systems may be activated by wired or wireless button mechanisms
06	Automatic Air release valve is installed on the inlet side of the recirculation pump per Section 110.3(c)5A.
07	A check valve is located between the recirculation pump and the water heater per Section 110.3(c)5B.
08	Hose bibb is installed between the pump and the water heating equipment with an isolation valve between the hose bibb and the water heating equipment per Section 110.3(c)5C.
09	Isolation valves are installed on both sides of the pump. One of the isolation valves may be the same isolation valve as in item 8 above per Section 110.3(c)5D.
10	The cold water supply piping and the recirculation loop piping is not connected to the hot water storage tank drain port per Section 110.3(c)5E.
11	A check valve is installed on the cold water supply line between the hot water system and the next closest tee on the cold water supply per Section 110.3(c)5F.
The responsible person's signature on this Certificate of Installation indicates the system identified on this Certificate has complied with all applicable requirements specified in this Table.	

For information and data collection only. Not valid until registered with a HERS provider

CERTIFICATE OF INSTALLATION		CF2R-PLB-20-H
Single Dwelling Unit Hot Water System Distribution		(Page 4 of 4)
Project Name:	Enforcement Agency:	Permit Number:
Dwelling Address:	City	Zip Code

DOCUMENTATION AUTHOR'S DECLARATION STATEMENT

1. I certify that this Certificate of Installation documentation is accurate and complete.

Documentation Author Name:	Documentation Author Signature:
Documentation Author Company Name:	Date Signed:
Address:	CEA/HERS Certification Identification (If applicable):
City/State/Zip:	Phone:

RESPONSIBLE PERSON'S DECLARATION STATEMENT

I certify the following under penalty of perjury, under the laws of the State of California:

1. The information provided on this Certificate of Installation is true and correct.
2. I am eligible under Division 3 of the Business and Professions Code in the applicable classification to accept responsibility for the system design, construction, or installation of features, materials, components, or manufactured devices for the scope of work identified on this Certificate of Installation and attest to the declarations in this statement (responsible builder/installer), otherwise I am an authorized representative of the responsible builder/installer.
3. The constructed or installed features, materials, components or manufactured devices (the installation) identified on this Certificate of Installation conforms to all applicable codes and regulations, and the installation conforms to the requirements given on the plans and specifications approved by the enforcement agency.
4. I understand that a HERS rater will check the installation to verify compliance, and that if such checking identifies defects; I am required to take corrective action at my expense. I understand that Energy Commission and HERS Provider representatives will also perform quality assurance checking of installations, including those approved as part of a sample group but not checked by a HERS rater, and if those installations fail to meet the requirements of such quality assurance checking, the required corrective action and additional checking/testing of other installations in that HERS sample group will be performed at my expense.
5. I reviewed a copy of the Certificate of Compliance approved by the enforcement agency that identifies the specific requirements for the scope of construction or installation identified on this Certificate of Installation, and I have ensured that the requirements that apply to the construction or installation have been met.
6. I will ensure that a registered copy of this Certificate of Installation shall be posted, or made available with the building permit(s) issued for the building, and made available to the enforcement agency for all applicable inspections. I understand that a registered copy of this Certificate of Installation is required to be included with the documentation the builder provides to the building owner at occupancy.

Responsible Builder/Installer Name:	Responsible Builder/Installer Signature:	
Company Name: (Installing Subcontractor or General Contractor or Builder/Owner)	Position With Company (Title):	
Address:	CSLB License:	
City/State/Zip:	Phone	Date Signed:
Third Party Quality Control Program (TPQCP) Status:	Name of TPQCP (if applicable):	

For information and data collection only. Not valid until registered with a HERS provider

CF2R-PLMB-20-H Instructions

TABLE E1 Compact Hot Water Distribution System-(CHWDS)	
Floor Area Served (ft2)	Maximum Measured Water Heater To Use Point Distance (ft)
< 1000	28’
1001 – 1600	43’
1601 – 2200	53’
2201 – 2800	62’
>2800	68’

TABLE F1 HERS-Verified Point of Use (POU-H)	
Size Nominal, Inch	Maximum Measured Water Heater To Use Point Distance Length of Pipe (feet)
3/8”	15
1/2”	10
3/4”	5

For information and data collection only. Not valid until registered with a HERS provider

A. DHW DISTRIBUTION SYSTEM

1. Water Heating System Name: From Certificate of Compliance
2. Dwelling Unit Distribute type: Based on the system being installed, pick from one of the following - HERS-Verified Pipe Insulation Credit (PIC-H), HERS-Verified Parallel Piping (PP-H), HERS-Verified Compact Hot Water Distribution System (CHWDS-H), HERS-Verified Point of Use (POU-H), HERS-Verified Demand Recirculation Manual Control (RDRmc-H), or HERS-Verified Demand Recirculation Sensor Control (RDRsc-H).

B. MANDATORY MEASURES FOR ALL DOMESTIC HOT WATER DISTRIBUTION SYSTEMS

Ensure all mandatory requirements are met.

C. (PIC-H) HERS-Verified Pipe Insulation Credit

Inspection to verify that all hot water piping in non-recirculating systems is insulated and that corners and tees are fully insulated. No piping should be visible due to insulation voids with the exception of the last segment of piping that penetrate walls and delivers hot water to the sink, appliance, etc. Refer to RA3.6.3.

D. (PP-H)-HERS-Verified Parallel Piping

Inspection that requires that the measured length of piping between the water heater and single central manifold does not exceed five feet. Refer to RA3.6.4.

E. (CHWDS-H) HERS-Verified Compact Hot Water Distribution System

Field verification to insure that the longest pipe run from any use point to the water heater serving that use point does not exceed a maximum length in Table E1 above. Refer to RA3.6.5.

F. (POU-H)-HERS-Verified Point of Use

Inspection that all hot water fixtures in the dwelling unit, with the exception of the clothes washer, must be located within certain distance from a water heater based on pipe diameter. To meet this requirement, most houses will require multiple water heaters. Ensure the maximum pipe length does not exceed the length specified in Table F1 above. Refer to RA3.6.6.

G. (RDRmc-H) - HERS-Verified Demand Recirculation Manual Control

Inspection to verify that all recirculating hot water piping is insulated and that corners and tees are fully insulated. No piping should be visible due to insulation voids. Refer to RA3.6.7.

H.(RDRsc-H) HERS-Verified Demand Recirculation Sensor Control
Inspection to verify that all recirculating hot water piping is insulated and that corners and tees are fully insulated. No piping should be visible due to insulation voids. Refer to RA3.6.8.

For information and data collection only. Not valid until registered with a HERS provider

MULTIFAMILY CENTRAL HOT WATER SYSTEM DISTRIBUTION

CERTIFICATE OF INSTALLATION		CF2R-PLB-21-H
Multifamily Central Hot Water System Distribution		(Page 1 of 2)
Project Name:	Enforcement Agency:	Permit Number:
Dwelling Address:	City	Zip Code

A. SYSTEM TYPE	
01	HERS-Verified Multiple Recirculation Loops for DHW Systems Serving Multiple Dwelling Units

B. HERS VERIFICATION REQUIREMENTS FOR ALL CENTRAL DOMESTIC HOT WATER RECIRCULATION SYSTEMS	
01	Outlet temperature controls: On systems that have a total capacity greater than 167,000 Btu/hr, outlets that require higher than service water temperatures as listed in the ASHRAE Handbook shall have separate remote heaters, heat exchangers, or boosters to supply the outlet with the higher temperature. (Section 110.3 (c)1)
02	Controls for hot water distribution systems: Service hot water systems with circulating pumps or with electrical heat trace systems shall be capable of automatically turning off the system. (Section 110.3(c)2).
03	Unfired Storage Tanks are insulated with an external R-12 or combination of R-16 internal and external Insulation. (Section 110.3(c)4).
04	Automatic Air release valve is installed on the inlet side of the recirculation pump per Section 110.3(c)5A.
05	A check valve is located between the recirculation pump and the water heater per Section 110.3(c)5B.
06	Hose bibb is installed between the pump and the water heating equipment with an isolation valve between the hose bibb and the water heating equipment per Section 110.3(c)5C.
07	Isolation valves are installed on both sides of the pump. One of the isolation valves may be the same isolation valve as in item 6 above per Section 110.3(c)5D.
08	The cold water supply piping and the recirculation loop piping is not connected to the hot water storage tank drain port per Section 110.3(c)5E.
09	A check valve is installed on the cold water supply line between the hot water system and the next closest tee on the cold water supply per Section 110.3(c)5F.
10	System must have a dedicated return line which is insulated. (Section 120.3)
11	All hot water pipes are insulated per the insulation requirements of Table 120.3A(Section 120.3)(1" insulation for 1" and smaller pipes. 1.5" insulation for 1 to 1.5 inch pipes)
12	Where insulation is installed there is no piping visible due to insulation voids
13	All elbows and tees fully insulated
The responsible person's signature on this Certificate of Installation indicates the system identified on this Certificate has complied with all applicable requirements specified in this Table.	

C. HERS-VERIFIED MULTIPLE RECIRCULATION LOOPS FOR DHW SYSTEMS SERVING MULTIPLE DWELLING UNITS	
01	All buildings with 8 or more dwelling units have a **minimum** 2 recirculation loops.
02	Each loop roughly serves the same number of dwellings.
03	Each loop will have its own pump and controls
The responsible person's signature on this Certificate of Installation indicates the system identified on this Certificate has complied with all applicable requirements specified in this Table.	

For information and data collection only. Not valid until registered with a HERS provider

CERTIFICATE OF INSTALLATION		CF2R-PLB-21-H
Multifamily Central Hot Water System Distribution		(Page 2 of 2)
Project Name:	Enforcement Agency:	Permit Number:
Dwelling Address:	City	Zip Code

DOCUMENTATION AUTHOR'S DECLARATION STATEMENT

1. I certify that this Certificate of Installation documentation is accurate and complete.

Documentation Author Name:	Documentation Author Signature:
Documentation Author Company Name:	Date Signed:
Address:	CEA/HERS Certification Identification (If applicable):
City/State/Zip:	Phone:

RESPONSIBLE PERSON'S DECLARATION STATEMENT

I certify the following under penalty of perjury, under the laws of the State of California:

1. The information provided on this Certificate of Installation is true and correct.
2. I am eligible under Division 3 of the Business and Professions Code in the applicable classification to accept responsibility for the system design, construction, or installation of features, materials, components, or manufactured devices for the scope of work identified on this Certificate of Installation and attest to the declarations in this statement (responsible builder/installer), otherwise I am an authorized representative of the responsible builder/installer.
3. The constructed or installed features, materials, components or manufactured devices (the installation) identified on this Certificate of Installation conforms to all applicable codes and regulations, and the installation conforms to the requirements given on the plans and specifications approved by the enforcement agency.
4. I understand that a HERS rater will check the installation to verify compliance, and that if such checking identifies defects; I am required to take corrective action at my expense. I understand that Energy Commission and HERS Provider representatives will also perform quality assurance checking of installations, including those approved as part of a sample group but not checked by a HERS rater, and if those installations fail to meet the requirements of such quality assurance checking, the required corrective action and additional checking/testing of other installations in that HERS sample group will be performed at my expense.
5. I reviewed a copy of the Certificate of Compliance approved by the enforcement agency that identifies the specific requirements for the scope of construction or installation identified on this Certificate of Installation, and I have ensured that the requirements that apply to the construction or installation have been met.
6. I will ensure that a registered copy of this Certificate of Installation shall be posted, or made available with the building permit(s) issued for the building, and made available to the enforcement agency for all applicable inspections. I understand that a registered copy of this Certificate of Installation is required to be included with the documentation the builder provides to the building owner at occupancy.

Responsible Builder/Installer Name:	Responsible Builder/Installer Signature:	
Company Name: (Installing Subcontractor or General Contractor or Builder/Owner)	Position With Company (Title):	
Address:	CSLB License:	
City/State/Zip:	Phone	Date Signed:
Third Party Quality Control Program (TPQCP) Status:	Name of TPQCP (if applicable):	

For information and data collection only. Not valid until registered with a HERS provider

A. SYSTEM TYPE

This form is used for HERS verification credit for Multiple Recirculation Loop Designs for DHW Systems Serving Multiple Dwelling Units defined in RA3.6.9.

B. MANDATORY MEASURES FOR ALL DOMESTIC HOT WATER DISTRIBUTION SYSTEMS

Ensure all mandatory requirements are met.

C. HERS-VERIFIED MULTIPLE RECIRCULATION LOOPS FOR DHW SYSTEMS SERVING MULTIPLE DWELLING UNITS

This measure requires on site HERS verification that at least two central recirculation loops are included in the system design. This credit is available to buildings with 8 or more units. The recirculation loops must be relatively equal in length and supply approximately the same number of dwelling units.

For information and data collection only. Not valid until registered with a HERS provider

PHOTOVOLTAIC SYSTEMS

CERTIFICATE OF INSTALLATION		CF2R-SPV-01-E
Photovoltaic Systems		(Page 1 of 3)
Project Name:	Enforcement Agency:	Permit Number:
Dwelling Address:	City	Zip Code

The installer is required to fill out this form for all newly installed Photovoltaic Systems (PV) when the CF-1R shows PV as required for compliance. Only single family residences and townhouses may install a PV system for compliance purposes. The performance compliance approach must be utilized and the project must be located in climate zones 9-15. Procedures for verifying compliance are described in Reference Residential Appendix RA4.6.

The installer is required to fill out this form for all newly installed Photovoltaic Systems (PV) when the PV system is being used to claim an exception to the Solar Ready requirements of Section 110.10, specifically Exception 1 to Section 110.10(b)1A for single family residences or Exception 1 to Section 110.10(b)1B for low-rise multifamily buildings. High-rise Multifamily buildings and Hotel/Motel Occupancies with fewer than ten stories and nonresidential buildings with three stories or fewer must use the NRCI—SPV-01-E to claim Exception 1 to Section 110.10(b)1B.

A. General Information		
01	Status for Compliance Credit for PV installation	
02	Status for compliance with Solar Ready Area Exception	

SPV-01a Photo Voltaic Compliance Credits

B. NSHP (applicable only if NSHP program is selected in Box A01)		
01	NSHP Project Identification Number	
02	This PV system receiving financing under the New Solar Homes Partnership (NSHP) program.	
03	The PV system meets all requirements specified on the CECPV Calculator Output form and all applicable requirements specified in the NSHP Guidebook.	
	By signing below, the installer certifies that these requirements are met.	

For information and data collection only. Not valid until registered with a HERS provider

CERTIFICATE OF INSTALLATION		CF2R-SPV-01-E
Photovoltaic Systems		(Page 2 of 3)
Project Name:	Enforcement Agency:	Permit Number:
Dwelling Address:	City	Zip Code

C. Non-NSHP (applicable only if not an NSHP program is selected in Box A01)		
01.	Module Manufacturer Name	
02.	Module Model Number	
03.	Inverter Manufacturer Name	
04.	Inverter Model Name	
05	Enter Module Nameplate DC Power Rating measure under Standard Test Conditions (watts)	
06	Enter Number of Modules used in the PV System	
07.	Installed PV System Nameplate DC Power Rating (watts)	
08.	Compliance Statement <<if C07 is greater than or equal to 2000 watts, system complies, otherwise it does not comply>>	
09.	PV array installed at either: 1. A roof pitch no greater than 2.4 degrees (ratio of rise to run no greater than 0.5:12) 2. A roof pitch greater than 2.4 degrees and no greater than 30.3 degrees (ratio of rise to run no greater than 7:12) and with an orientation between 110 degrees and 270 degrees of true north.	
10.	The PV System is equipped with one of the following: 1. A system energy production meter that is integral to the inverter, 2. A standalone system energy production meter, 3. An energy production monitoring system.	
11.	Any obstruction that projects above a PV array shall be located twice the distance, measured in the horizontal plane, of the height difference between the highest point of the obstruction and the horizontal projection of the nearest point of the PV array, measured in the vertical plane.	
12.	By signing below, the installer certifies that these requirements are met.	

For information and data collection only. Not valid until registered with a HERS provider

CERTIFICATE OF INSTALLATION		CF2R-SPV-01-E
Photovoltaic Systems		(Page 3 of 3)
Project Name:	Enforcement Agency:	Permit Number:
Dwelling Address:	City	Zip Code

DOCUMENTATION AUTHOR'S DECLARATION STATEMENT

1. I certify that this Certificate of Installation documentation is accurate and complete.

Documentation Author Name:	Documentation Author Signature:
Documentation Author Company Name:	Date Signed:
Address:	CEA/HERS Certification Identification (If applicable):
City/State/Zip:	Phone:

RESPONSIBLE PERSON'S DECLARATION STATEMENT

I certify the following under penalty of perjury, under the laws of the State of California:

1. The information provided on this Certificate of Installation is true and correct.
2. I am eligible under Division 3 of the Business and Professions Code in the applicable classification to accept responsibility for the system design, construction, or installation of features, materials, components, or manufactured devices for the scope of work identified on this Certificate of Installation, and attest to the declarations in this statement (responsible builder/installer), otherwise I am an authorized representative of the responsible builder/installer.
3. The constructed or installed features, materials, components or manufactured devices (the installation) identified on this Certificate of Installation conforms to all applicable codes and regulations, and the installation conforms to the requirements given on the plans and specifications approved by the enforcement agency.
4. I reviewed a copy of the Certificate of Compliance approved by the enforcement agency that identifies the specific requirements for the scope of construction or installation identified on this Certificate of Installation, and I have ensured that the requirements that apply to the construction or installation have been met.
5. I will ensure that a registered copy of this Certificate of Installation shall be posted, or made available with the building permit(s) issued for the building, and made available to the enforcement agency for all applicable inspections. I understand that a registered copy of this Certificate of Installation is required to be included with the documentation the builder provides to the building owner at occupancy.

Responsible Builder/Installer Name:	Responsible Builder/Installer Signature:	
Company Name: (Installing Subcontractor or General Contractor or Builder/Owner)	Position With Company (Title):	
Address:	CSLB License:	
City/State/Zip:	Phone	Date Signed:

For information and data collection only. Not valid until registered with a HERS provider

Installer Instructions

1. Determine if the PV system is receiving financing under the New Solar Homes Partnership (NSHP) program in Box A01.
2. If NSHP program is selected in Box A01, then go to box B01 and fill out Section B for NSHP. If non-NSHP then go to Box C01 and fill out Section C for Non-NSHP.
3. For a system receiving financing under NSHP, provide the NSHP Project Identification Number in Box B01.
4. The installer certifies that the requirements in boxes B02 and B03 have been met. Then go to end of form and sign signature block.
5. For a system not receiving financing under NSHP, provide the module manufacturer name in Box C01.
6. For a system not receiving financing under NSHP, provide the module model name in Box C02.
7. For a system not receiving financing under NSHP, provide the inverter manufacturer name in Box C03.
8. For a system not receiving financing under NSHP, provide the module model name in Box C04.
9. For a system not receiving financing under NSHP, enter the Module Nameplate DC Power Rating in Box C05.
10. Enter the number of modules used in the PV system in Box C06.
11. The Installed System DC Power Rating of the system will be calculated in Box C07 and it must be greater than or equal to 2000 watts for the system to comply, otherwise it does not comply
12. The installer certifies that the requirements in boxes C09 thru C11 have been met. Then go to end of form and sign signature block.

7.3.3 **Shading.** §110.10(b)3

For both single family residences and low-rise multi-family buildings, the solar zone shall be free from roof penetrations and shall not have any obstructions such as vents, chimneys, architectural features, or roof mounted equipment located in the solar zone. This requirement is so that the solar zone remains clear and open for the future installation of a solar energy system.

For both single family residences and low-rise multi-family buildings, any obstruction, located on the roof or any other part of the building that projects above the solar zone shall be located at a sufficient horizontal distance away from the solar zone, in order to reduce the resulting shading of the solar zone. For each obstruction, the horizontal distance ("D") from the obstruction to the solar zone shall be at least two times the height difference ("H") between the highest point of the obstruction and the horizontal projection of the nearest point of the solar zone.

$$D \geq 2 \times H$$

For information and data collection only. Not valid until registered with a HERS provider

Figure 7.1 Artistic Depiction of "H" and "D"

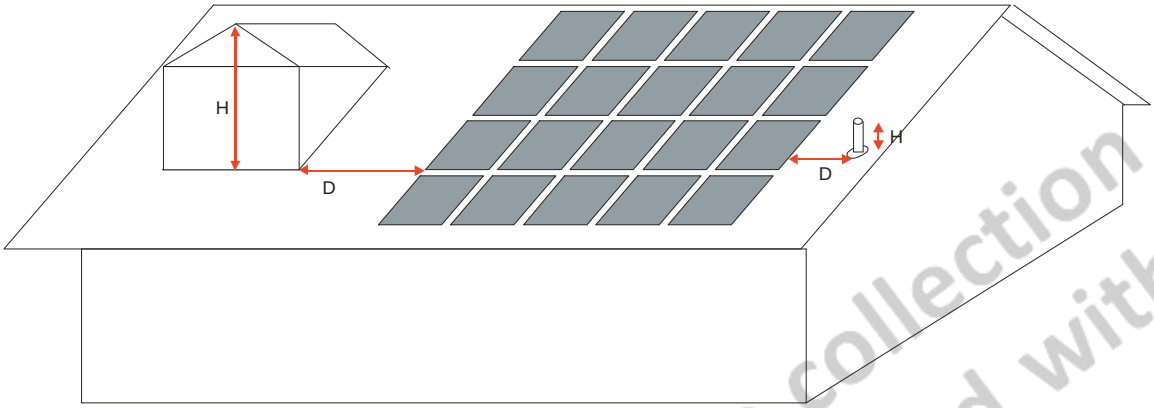

Source: California Energy Commission

Any obstruction oriented north of all points of the solar zone is not subject to these requirements. Any obstruction which is not located on the roof or another part of the building, such as landscaping or a neighboring building is not subject to these requirements.

For information and data collection only. Not valid until registered with a HERS provider

DOCUMENTATION AUTHOR'S DECLARATION STATEMENT	
I certify that this Certificate of Installation documentation is accurate and complete.	
Documentation Author Name:	Documentation Author Signature:
Documentation Author Company Name:	Date Signed:
Address:	CEA/CEPE/HERS certification identification (If applicable):
City/State/Zip:	Phone:

RESPONSIBLE PERSON'S DECLARATION STATEMENT

I certify the following under penalty of perjury, under the laws of the State of California:

1. The information provided on this Certificate of Installation is true and correct.
2. I am eligible under Division 3 of the Business and Professions Code to accept responsibility for the scope of construction or installation, in the applicable classification, for the scope of work specified on this Certificate of Installation (responsible builder/installer), otherwise I am an authorized representative of the responsible builder/installer.
3. The constructed or installed features, materials, components or manufactured devices (the installation) identified on this Certificate of Installation conforms to all applicable codes and regulations, and the installation conforms to the requirements given on the plans and specifications approved by the enforcement agency.
4. I reviewed a copy of the Certificate of Compliance approved by the enforcement agency that identifies the specific requirements for the scope of construction or installation identified on this Certificate of Installation, and I have ensured that the requirements that apply to the construction or installation have been met.
5. I will ensure that a registered copy of this Certificate of Installation shall be posted, or made available with the building permit(s) issued for the building, and made available to the enforcement agency for all applicable inspections. I understand that a registered copy of this Certificate of Installation is required to be included with the documentation the builder provides to the building owner at occupancy.

Responsible Builder/Installer Name:	Responsible Builder/Installer Signature:	
Company Name: (Installing Subcontractor or General Contractor or Builder/Owner)	Position With Company (Title):	
Address:	CSLB License:	
City/State/Zip:	Phone	Date Signed:

For information and data collection only. Not valid until registered with a HERS provider

PHOTOVOLTAIC SYSTEM VERFICATION

CERTIFICATE OF INSTALLATION		CF2R-SPV-01-E
Photovoltaic System Verification		(Page 1 of 2)
Project Name:	Enforcement Agency:	Permit Number:
Dwelling Address:	City	Zip Code

The installer is required to fill out this form for all newly installed Photovoltaic Systems (PV) when the CF-1R shows PV as required for compliance. Only single family residences and townhouses may install a PV system for compliance purposes. The performance compliance approach must be utilized and the project must be located in climate zones 9-15. Procedures for verifying compliance are described in Reference Residential Appendix RA4.6.

The installer is required to fill out this form for all newly installed Photovoltaic Systems (PV) when the PV system is being used to claim an exception to the Solar Ready requirements of Section 110.10, specifically Exception 1 to Section 110.10(b)1A for single family residences or Exception 1 to Section 110.10(b)1B for low-rise multifamily buildings. High-rise Multifamily buildings and Hotel/Motel Occupancies with fewer than ten stories and nonresidential buildings with three stories or fewer must use the NRCI—SPV-01-E to claim Exception 1 to Section 110.10(b)1B.

A. General Information		
01	Status for Compliance Credit for PV installation	
02	Status for compliance with Solar Ready Area Exception	

01b Solar Exception to Solar Ready Area requirements

B. Single Family Residence (Applicable only if "Single Family Residence" selected in A02)		
01	Enter Module Manufacturer Name	
02	Enter Module Model Number	
03	Enter Module nameplate DC Power Rating measure under Standard Test Conditions (watts)	
04	Enter Number of Modules used in the PV System	
05.	Installed PV System Nameplate DC Power Rating (watts)	
06.	Compliance Statement:	

C. Low-rise Multifamily (Applicable only if "Low-rise Multifamily" selected in A02)		
01.	Total Roof Area (ft^2)	
02.	Minimum Nameplate DC Power Rating (Watts) = Total Roof Area (ft^2) x (1 Watt/ft^2)	
03	Enter Module Manufacturer Name	
04	Enter Module Model Number	
05	Enter Module nameplate DC Power Rating measure under Standard Test Conditions (watts)	
06	Enter Number of Modules used in the PV System	
07.	Installed PV System Nameplate DC Power Rating (watts)	
08	Compliance Statement:	

For information and data collection only. Not valid until registered with a HERS provider

CERTIFICATE OF INSTALLATION		CF2R-SPV-01-E
Photovoltaic System Verification		(Page 2 of 2)
Project Name:	Enforcement Agency:	Permit Number:
Dwelling Address:	City	Zip Code

DOCUMENTATION AUTHOR'S DECLARATION STATEMENT

1. I certify that this Certificate of Installation documentation is accurate and complete.

Documentation Author Name:	Documentation Author Signature:
Documentation Author Company Name:	Date Signed:
Address:	CEA/HERS Certification Identification (If applicable):
City/State/Zip:	Phone:

RESPONSIBLE PERSON'S DECLARATION STATEMENT

I certify the following under penalty of perjury, under the laws of the State of California:

1. The information provided on this Certificate of Installation is true and correct.
2. I am eligible under Division 3 of the Business and Professions Code in the applicable classification to accept responsibility for the system design, construction, or installation of features, materials, components, or manufactured devices for the scope of work identified on this Certificate of Installation, and attest to the declarations in this statement (responsible builder/installer), otherwise I am an authorized representative of the responsible builder/installer.
3. The constructed or installed features, materials, components or manufactured devices (the installation) identified on this Certificate of Installation conforms to all applicable codes and regulations, and the installation conforms to the requirements given on the plans and specifications approved by the enforcement agency.
4. I reviewed a copy of the Certificate of Compliance approved by the enforcement agency that identifies the specific requirements for the scope of construction or installation identified on this Certificate of Installation, and I have ensured that the requirements that apply to the construction or installation have been met.
5. I will ensure that a registered copy of this Certificate of Installation shall be posted, or made available with the building permit(s) issued for the building, and made available to the enforcement agency for all applicable inspections. I understand that a registered copy of this Certificate of Installation is required to be included with the documentation the builder provides to the building owner at occupancy.

Responsible Builder/Installer Name:	Responsible Builder/Installer Signature:	
Company Name: (Installing Subcontractor or General Contractor or Builder/Owner)	Position With Company (Title):	
Address:	CSLB License:	
City/State/Zip:	Phone	Date Signed:

For information and data collection only. Not valid until registered with a HERS provider.

Installer Instructions

1. If "For Exception to Solar Ready Requirements in Section 110.10" is selected, then complete Section E by selecting either "Single Family Residence" or "Low-rise Multifamily Building"
2. In Box A02, determine if project is single family or multifamily.
3. If Box A02 is single family, complete Section B.
4. If Single Family is selected, provide module manufacturer name in Box B01.
5. If Single Family is selected, provide module model name in Box B02.
6. If Single Family is selected, provide module nameplate DC power rating (watts) in Box B03.
7. If Single Family is selected, provide the number of modules use in the PV system in Box B04.
8. The Installed System DC Power Rating of the system will be calculated in Box B05 and it must be greater than or equal to 1000 watts.
9. The installer certifies that all requirements have been met. Then go to end of form and sign signature block
10. If Box E01 is Low-rise Multifamily, complete Section C
11. If Low-rise Multifamily is selected then go to Box C01 and provide the total roof area in square feet.
12. If Low-rise Multifamily is selected, provide module manufacturer name in Box C03.
13. If Low-rise Multifamily is selected, provide module model name in Box C04.
14. If Low-rise Multifamily is selected, provide module nameplate DC power rating (watts) in Box C05.
15. If Low-rise Multifamily is selected, provide the number of modules use in the PV system in Box C06.
16. The Installed System DC Power Rating of the system will be calculated in Box B05 and it must be greater than or equal to the value in Box C02.
    The installer certifies that all requirements have been met. Then go to end of form and sign signature block

For information and data collection only. Not valid until registered with a HERS provider

PHOTOVOLTAIC SYSTEM VERFICATION

CERTIFICATE OF INSTALLATION		CF2R-SPV-01-E
Photovoltaic System Verification		(Page 1 of 2)
Project Name:	Enforcement Agency:	Permit Number:
Dwelling Address:	City	Zip Code

The installer is required to fill out this form for all newly installed Photovoltaic Systems (PV) when the CF-1R shows PV as required for compliance. Only single family residences and townhouses may install a PV system for compliance purposes. The performance compliance approach must be utilized and the project must be located in climate zones 9-15. Procedures for verifying compliance are described in Reference Residential Appendix RA4.6.

The installer is required to fill out this form for all newly installed Photovoltaic Systems (PV) when the PV system is being used to claim an exception to the Solar Ready requirements of Section 110.10, specifically Exception 1 to Section 110.10(b)1A for single family residences or Exception 1 to Section 110.10(b)1B for low-rise multifamily buildings. High-rise Multifamily buildings and Hotel/Motel Occupancies with fewer than ten stories and nonresidential buildings with three stories or fewer must use the NRCI—SPV-01-E to claim Exception 1 to Section 110.10(b)1B.

A. General Information		
01	Status for Compliance Credit for PV installation	
02	Status for compliance with Solar Ready Area Exception	

01b Solar Exception to Solar Ready Area requirements

B. Single Family Residence (Applicable only if "Single Family Residence" selected in A02)		
01	Enter Module Manufacturer Name	
02	Enter Module Model Number	
03	Enter Module nameplate DC Power Rating measure under Standard Test Conditions (watts)	
04	Enter Number of Modules used in the PV System	
05.	Installed PV System Nameplate DC Power Rating (watts)	
06.	Compliance Statement:	

C. Low-rise Multifamily (Applicable only if "Low-rise Multifamily" selected in A02)		
01.	Total Roof Area (ft^2)	
02.	Minimum Nameplate DC Power Rating (Watts) = Total Roof Area (ft^2) x (1 Watt/ft^2)	
03	Enter Module Manufacturer Name	
04	Enter Module Model Number	
05	Enter Module nameplate DC Power Rating measure under Standard Test Conditions (watts)	
06	Enter Number of Modules used in the PV System	
07.	Installed PV System Nameplate DC Power Rating (watts)	
08	Compliance Statement:	

For information and data collection only. Not valid until registered with a HERS provider

CERTIFICATE OF INSTALLATION		CF2R-SPV-01-E
Photovoltaic System Verification		(Page 2 of 2)
Project Name:	Enforcement Agency:	Permit Number:
Dwelling Address:	City	Zip Code

DOCUMENTATION AUTHOR'S DECLARATION STATEMENT

1. I certify that this Certificate of Installation documentation is accurate and complete.

Documentation Author Name:	Documentation Author Signature:
Documentation Author Company Name:	Date Signed:
Address:	CEA/HERS Certification Identification (If applicable):
City/State/Zip:	Phone:

RESPONSIBLE PERSON'S DECLARATION STATEMENT

I certify the following under penalty of perjury, under the laws of the State of California:

1. The information provided on this Certificate of Installation is true and correct.
2. I am eligible under Division 3 of the Business and Professions Code in the applicable classification to accept responsibility for the system design, construction, or installation of features, materials, components, or manufactured devices for the scope of work identified on this Certificate of Installation, and attest to the declarations in this statement (responsible builder/installer), otherwise I am an authorized representative of the responsible builder/installer.
3. The constructed or installed features, materials, components or manufactured devices (the installation) identified on this Certificate of Installation conforms to all applicable codes and regulations, and the installation conforms to the requirements given on the plans and specifications approved by the enforcement agency.
4. I reviewed a copy of the Certificate of Compliance approved by the enforcement agency that identifies the specific requirements for the scope of construction or installation identified on this Certificate of Installation, and I have ensured that the requirements that apply to the construction or installation have been met.
5. I will ensure that a registered copy of this Certificate of Installation shall be posted, or made available with the building permit(s) issued for the building, and made available to the enforcement agency for all applicable inspections. I understand that a registered copy of this Certificate of Installation is required to be included with the documentation the builder provides to the building owner at occupancy.

Responsible Builder/Installer Name:	Responsible Builder/Installer Signature:	
Company Name: (Installing Subcontractor or General Contractor or Builder/Owner)	Position With Company (Title):	
Address:	CSLB License:	
City/State/Zip:	Phone	Date Signed:

For information and data collection only. Not valid until registered with a HERS provider.

Installer Instructions

1. If "For Exception to Solar Ready Requirements in Section 110.10" is selected, then complete Section E by selecting either "Single Family Residence" or "Low-rise Multifamily Building"
2. In Box A02, determine if project is single family or multifamily.
3. If Box A02 is single family, complete Section B.
4. If Single Family is selected, provide module manufacturer name in Box B01.
5. If Single Family is selected, provide module model name in Box B02.
6. If Single Family is selected, provide module nameplate DC power rating (watts) in Box B03.
7. If Single Family is selected, provide the number of modules use in the PV system in Box B04.
8. The Installed System DC Power Rating of the system will be calculated in Box B05 and it must be greater than or equal to 1000 watts.
9. The installer certifies that all requirements have been met. Then go to end of form and sign signature block
10. If Box E01 is Low-rise Multifamily, complete Section C
11. If Low-rise Multifamily is selected then go to Box C01 and provide the total roof area in square feet.
12. If Low-rise Multifamily is selected, provide module manufacturer name in Box C03.
13. If Low-rise Multifamily is selected, provide module model name in Box C04.
14. If Low-rise Multifamily is selected, provide module nameplate DC power rating (watts) in Box C05.
15. If Low-rise Multifamily is selected, provide the number of modules use in the PV system in Box C06.
16. The Installed System DC Power Rating of the system will be calculated in Box B05 and it must be greater than or equal to the value in Box C02.
    The installer certifies that all requirements have been met. Then go to end of form and sign signature block

For information and data collection only. Not valid until registered with a HERS provider

CERTIFICATE OF INSTALLATION		CF2R-SPV-01-E
Photovoltaic System Verification		(Page 1 of 2)
Project Name:	Enforcement Agency:	Permit Number:
Dwelling Address:	City	Zip Code

The installer is required to fill out this form for all newly installed Photovoltaic Systems (PV) when the CF-1R shows PV as required for compliance. Only single family residences and townhouses may install a PV system for compliance purposes. The performance compliance approach must be utilized and the project must be located in climate zones 9-15. Procedures for verifying compliance are described in Reference Residential Appendix RA4.6.

The installer is required to fill out this form for all newly installed Photovoltaic Systems (PV) when the PV system is being used to claim an exception to the Solar Ready requirements of Section 110.10, specifically Exception 1 to Section 110.10(b)1A for single family residences or Exception 1 to Section 110.10(b)1B for low-rise multifamily buildings. High-rise Multifamily buildings and Hotel/Motel Occupancies with fewer than ten stories and nonresidential buildings with three stories or fewer must use the NRCI—SPV-01-E to claim Exception 1 to Section 110.10(b)1B.

A. General Information		
01	Status for Compliance Credit for PV installation	
02	Status for compliance with Solar Ready Area Exception	

01c PV Compliance Credits + Exceptions to SRA requirements

B. Single Family Residence (This table is applicable only if "Single Family Residence" selected in A02)		
01	Enter Module Manufacturer Name	
02	Enter Module Model Number	
03	Enter Module nameplate DC Power Rating measured under Standard Test Conditions (watts)	
04	Enter Number of Modules used in the PV System	
05.	Installed PV System Nameplate DC Power Rating (watts)	

C. NSHP (This table is applicable only if NSHP program is selected in Box A01)		
01	NSHP Project Identification Number	
02	This PV system receiving financing under the New Solar Homes Partnership (NSHP) program.	
03	The PV system meets all requirements specified on the CECPV Calculator Output form and all applicable requirements specified in the NSHP Guidebook.	
04	By signing below, the installer certifies that these requirements are met.	

For information and data collection only. Not valid until registered with a HERS provider

CERTIFICATE OF INSTALLATION		CF2R-SPV-01-E
Photovoltaic System Verification		(Page 2 of 2)
Project Name:	Enforcement Agency:	Permit Number:
Dwelling Address:	City	Zip Code

D. Non-NSHP (This table is applicable only if "not an NSHP program" is selected in Box A01)		
01.	Inverter Manufacturer Name	
02.	Inverter Model Name	
03.	Compliance Statement:	
04.	PV array installed at either: • A roof pitch no greater than 2.4 degrees (ratio of rise to run no greater than 0.5:12) • A roof pitch greater than 2.4 degrees and no greater than 30.3 degrees (ratio of rise to run no greater than 7:12) and with an orientation between 110 degrees and 270 degrees of true north.	
05.	The PV System is equipped with one of the following: • A system energy production meter that is integral to the inverter, • A standalone system energy production meter, • An energy production monitoring system.	
06.	Any obstruction that projects above a PV array shall be located twice the distance, measured in the horizontal plane, of the height difference between the highest point of the obstruction and the horizontal projection of the nearest point of the PV array, measured in the vertical plane.	
07.	By signing below, the installer certifies that these requirements are met.	

DOCUMENTATION AUTHOR'S DECLARATION STATEMENT

1. I certify that this Certificate of Installation documentation is accurate and complete.

Documentation Author Name:	Documentation Author Signature:
Documentation Author Company Name:	Date Signed:
Address:	CEA/HERS Certification Identification (If applicable):
City/State/Zip:	Phone:

RESPONSIBLE PERSON'S DECLARATION STATEMENT

I certify the following under penalty of perjury, under the laws of the State of California:

1. The information provided on this Certificate of Installation is true and correct.
2. I am eligible under Division 3 of the Business and Professions Code in the applicable classification to accept responsibility for the system design, construction, or installation of features, materials, components, or manufactured devices for the scope of work identified on this Certificate of Installation, and attest to the declarations in this statement (responsible builder/installer), otherwise I am an authorized representative of the responsible builder/installer.
3. The constructed or installed features, materials, components or manufactured devices (the installation) identified on this Certificate of Installation conforms to all applicable codes and regulations, and the installation conforms to the requirements given on the plans and specifications approved by the enforcement agency.
4. I reviewed a copy of the Certificate of Compliance approved by the enforcement agency that identifies the specific requirements for the scope of construction or installation identified on this Certificate of Installation, and I have ensured that the requirements that apply to the construction or installation have been met.
5. I will ensure that a registered copy of this Certificate of Installation shall be posted, or made available with the building permit(s) issued for the building, and made available to the enforcement agency for all applicable inspections. I understand that a registered copy of this Certificate of Installation is required to be included with the documentation the builder provides to the building owner at occupancy.

Responsible Builder/Installer Name:	Responsible Builder/Installer Signature:	
Company Name: (Installing Subcontractor or General Contractor or Builder/Owner)	Position With Company (Title):	
Address:	CSLB License:	
City/State/Zip:	Phone	Date Signed:

For information and data collection only. Not valid until registered with a HERS provider

Installer Instructions

1. Provide the module manufacturer name in Box B01.
2. Provide the module model number in Box B02.
3. Provide the module nameplate DC power rating in Box B03.
4. Provide the number of modules used in the PV system in Box B04.
5. For a system participating in the NSHP, provide the NSHP Project ID Number in Box C01.
6. The installer certifies that the requirements listed in Boxes C02 and C03 have been met. Then go to end of form and sign signature block.
7. For a system not receiving financing under NSHP, provide the inverter manufacturer name in Box D01.
8. For a system not receiving financing under NSHP, provide the inverter model name in Box D02.
9. The installer certifies that the requirements in boxes D03 thru D06 have been met. Then go to end of form and sign signature block.

Shading. §110.10(b)3

For both single family residences and low-rise multi-family buildings, the solar zone shall be free from roof penetrations and shall not have any obstructions such as vents, chimneys, architectural features, or roof mounted equipment located in the solar zone. This requirement is so that the solar zone remains clear and open for the future installation of a solar energy system.

For both single family residences and low-rise multi-family buildings, any obstruction, located on the roof or any other part of the building that projects above the solar zone shall be located at a sufficient horizontal distance away from the solar zone, in order to reduce the resulting shading of the solar zone. For each obstruction, the horizontal distance ("D") from the obstruction to the solar zone shall be at least two times the height difference ("H") between the highest point of the obstruction and the horizontal projection of the nearest point of the solar zone.

$$D \geq 2 \times H$$

Figure 7.1 Artistic Depiction of "H" and "D"

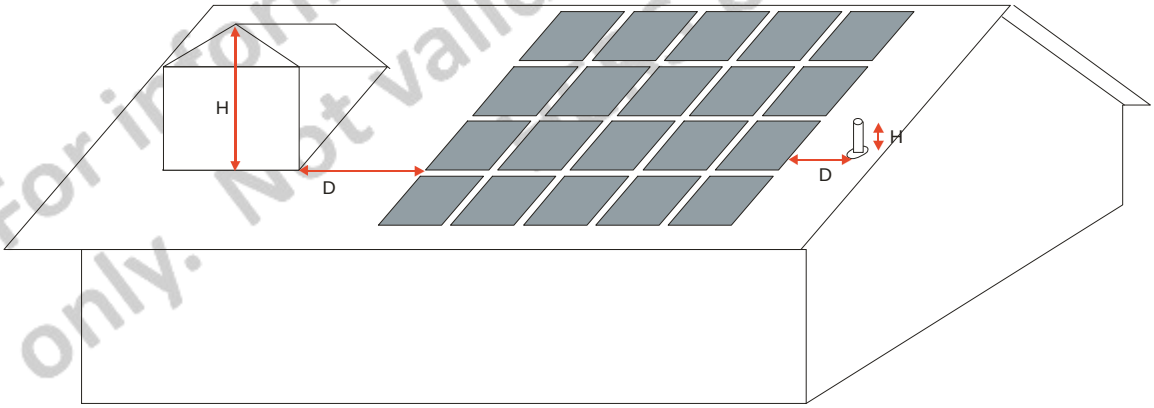

Source: California Energy Commission

Any obstruction oriented north of all points of the solar zone is not subject to these requirements. Any obstruction which is not located on the roof or another part of the building, such as landscaping or a neighboring building is not subject to these requirements.

For information and data collection only. Not valid until registered with a HERS provider

The installer is required to fill out this form for all newly installed Photovoltaic Systems (PV) when the CF-1R shows PV as required for compliance. Only single family residences and townhouses may install a PV system for compliance purposes. The performance compliance approach must be utilized and the project must be located in climate zones 9-15. Procedures for verifying compliance are described in Reference Residential Appendix RA4.6.

The installer is required to fill out this form for all newly installed Photovoltaic Systems (PV) when the PV system is being used to claim an exception to the Solar Ready requirements of Section 110.10, specifically Exception 1 to Section 110.10(b)1A for single family residences or Exception 1 to Section 110.10(b)1B for low-rise multifamily buildings. High-rise Multifamily buildings and Hotel/Motel Occupancies with fewer than ten stories and nonresidential buildings with three stories or fewer must use the NRCI—SPV-01-E to claim Exception 1 to Section 110.10(b)1B.

A. General Information		
01	Status for Compliance Credit for PV installation	<<user pick from list: • No compliance credit claimed; or • Credit claimed - Is NSHP program participant • Credit Claimed - Not an NSHP program participant>>
02	Status for compliance with Solar Ready Area Exception	<<user pick from list: • No exception claimed • Single family building • Low-rise Multifamily building>>
03	determine compliance method for this document; display applicable tables below; (this row not visible to user)	<<Calculated Result: if A01= NSHP program or Not an NSHP program and A02 = No exception claimed; then display method: **01a Photo Voltaic Compliance Credits** elseif A02= Single family building or Low-rise Multifamily building and A01 = No compliance credit claimed; then display method: **01b Solar Exception to Solar Ready Area requirements** elseif A02= Single family building, and A01≠ No compliance credit claimed; then display method **01c PV Compliance Credits + Exceptions to SRA requirements**>>

01c PV Compliance Credits + Exceptions to SRA requirements

B. Single Family Residence << this table visible/applicable/used only if "Single Family Residence" selected in A02>>		
01	Enter Module Manufacturer Name	<<user input>>
02	Enter Module Model Number	<<user input>>
03	Enter Module nameplate DC Power Rating measured under Standard Test Conditions (watts)	<<user input>>
04	Enter Number of Modules used in the PV System	<<user input>>
05.	Installed PV System Nameplate DC Power Rating (watts)	<<calculated value = B03*B04>>

For information and data collection only. Not valid until registered with a HERS provider

C. NSHP << this table visible/applicable/used only if NSHP program is selected in Box A01>>		
01	NSHP Project Identification Number	<<user input>>
02	This PV system receiving financing under the New Solar Homes Partnership (NSHP) program.	
03	The PV system meets all requirements specified on the CECPV Calculator Output form and all applicable requirements specified in the NSHP Guidebook.	
04	By signing below, the installer certifies that these requirements are met.	

D. Non-NSHP << this table visible/applicable/used only if not an NSHP program is selected in Box A01>>		
01.	Inverter Manufacturer Name	<<user input>>
02.	Inverter Model Name	<<user input>>
03.	Compliance Statement <<if A05 is greater than or equal to 2000 watts, system complies, otherwise it does not comply>>	
04.	PV array installed at <u>either</u>: • A roof pitch no greater than 2.4 degrees (ratio of rise to run no greater than 0.5:12), or • A roof pitch greater than 2.4 degrees and no greater than 30.3 degrees (ratio of rise to run no greater than 7:12) and with an orientation between 110 degrees and 270 degrees of true north.	
05.	The PV System is equipped with one of the following: • A system energy production meter that is integral to the inverter, • A standalone system energy production meter, • An energy production monitoring system.	
06.	Any obstruction that projects above a PV array shall be located twice the distance, measured in the horizontal plane, of the height difference between the highest point of the obstruction and the horizontal projection of the nearest point of the PV array, measured in the vertical plane.	
07.	By signing below, the installer certifies that these requirements are met.	

For information and data collection only. Not valid until registered with a HERS provider

DOCUMENTATION AUTHOR'S DECLARATION STATEMENT

2. I certify that this Certificate of Installation documentation is accurate and complete.

Documentation Author Name:	Documentation Author Signature:
Documentation Author Company Name:	Date Signed:
Address:	CEA/CEPE/HERS certification identification (If applicable):
City/State/Zip:	Phone:

RESPONSIBLE PERSON'S DECLARATION STATEMENT

I certify the following under penalty of perjury, under the laws of the State of California:

6. The information provided on this Certificate of Installation is true and correct.
7. I am eligible under Division 3 of the Business and Professions Code to accept responsibility for the scope of construction or installation, in the applicable classification, for the scope of work specified on this Certificate of Installation (responsible builder/installer), otherwise I am an authorized representative of the responsible builder/installer.
8. The constructed or installed features, materials, components or manufactured devices (the installation) identified on this Certificate of Installation conforms to all applicable codes and regulations, and the installation conforms to the requirements given on the plans and specifications approved by the enforcement agency.
9. I reviewed a copy of the Certificate of Compliance approved by the enforcement agency that identifies the specific requirements for the scope of construction or installation identified on this Certificate of Installation, and I have ensured that the requirements that apply to the construction or installation have been met.
10. I will ensure that a registered copy of this Certificate of Installation shall be posted, or made available with the building permit(s) issued for the building, and made available to the enforcement agency for all applicable inspections. I understand that a registered copy of this Certificate of Installation is required to be included with the documentation the builder provides to the building owner at occupancy.

Responsible Builder/Installer Name:	Responsible Builder/Installer Signature:	
Company Name: (Installing Subcontractor or General Contractor or Builder/Owner)	Position With Company (Title):	
Address:	CSLB License:	
City/State/Zip:	Phone	Date Signed:

For information and data collection only. Not valid until registered with a HERS provider

CERTIFICATE OF INSTALLATION		CF2R-STH-01-E
Solar Water Heating Systems		(Page 1 of 2)
Project Name:	Enforcement Agency:	Permit Number:
Dwelling Address:	City	Zip Code

A. SOLAR WATER HEATING SYSTEMS		
01	Manufacturer Name	
02	Model Number	
03	SRCC Certification Number	
04	Certification Type (OG-300, OG-100)	
05	Solar Savings Fraction (annual average value)	
06	# of Collectors in System (N/A for OG-300 systems)	
07	Collector Size (Square Footage) (N/A for OG-300 systems)	
08	Total Storage Volume (gallons) (N/A for OG-300 systems)	
09	Solar System Collector Orientation (N/A for OG-300 systems)	
10	Solar System Collector Tilt (N/A for OG-300 systems)	
The responsible person's signature on this Certificate of Installation indicates the system identified on this Certificate has complied with all applicable requirements specified in this Table.		

B. SRCC OG-100 CERTIFIED COLLECTORS *The installed system shall meet the following eligibility criteria:*	
01	System is installed at the same orientation as modeled.
02	System is installed at the same tilt as modeled.
03	The system shall have the same collectors, pumps, controls, storage tank and backup water heater fuel type as the rated condition.
04	The collectors are located in a position that is not shaded by adjacent buildings or trees.
05	Backup Storage tanks are insulated with either an internal R-12 (labeled on tank) or external R-16
The responsible person's signature on this Certificate of Installation indicates the system identified on this Certificate has complied with all applicable requirements specified in this Table.	

C. SRCC OG-300 CERTIFIED SYSTEMS *The installed system shall meet the following eligibility criteria:*	
01	The collectors shall face within 35 degrees of south and be tilted at a slope of at least 3:12
02	The system shall have the same collectors, pumps, controls, storage tank and backup water heater fuel type as the rated condition.
03	The collectors shall be located in a position that is not shaded by adjacent buildings or trees.
The responsible person's signature on this Certificate of Installation indicates the system identified on this Certificate has complied with all applicable requirements specified in this Table.	

D. SIZING COMPLIANCE WITH MULTIFAMILY PRESCRIPTIVE REQUIREMENTS*:*	
01	For climate zones 1 through 9 only - the solar system has an annual solar savings fraction of 0.2
02	For climate zones 10 through 16 only – the solar system has an annual solar savings fraction of 0.35
The responsible person's signature on this Certificate of Installation indicates the system identified on this Certificate has complied with all applicable requirements specified in this Table.	

For information and data collection only. Not valid until registered with a HERS provider

CERTIFICATE OF INSTALLATION		CF2R-STH-01-E
Solar Water Heating Systems		(Page 2 of 2)
Project Name:	Enforcement Agency:	Permit Number:
Dwelling Address:	City	Zip Code

E. SIZING COMPLIANCE WITH ELECTRIC WATER HEATING REQUIREMENTS:	
01	Solar System must have an annual solar fraction of at least 50 percent. (§150.1(c)8D)
02	Site must not have natural gas
The responsible person's signature on this Certificate of Installation indicates the system identified on this Certificate has complied with all applicable requirements specified in this Table.	

F. MANDATORY MEASURES FOR SOLAR WATER HEATING SYSTEMS	
01	Backup storage tanks for solar water-heating systems have R-12 external insulation or R-16 internal insulation where the internal insulation R-value indicated on the exterior of the tank. (§150.0(j)1B).
02	All domestic hot water piping (including solar) shall be insulated (§150(j)2A)
03	Solar water-heating system and/or/collectors are certified by the Solar Rating and Certification Corporation. (§150.0(n)).
The responsible person's signature on this Certificate of Installation indicates the system identified on this Certificate has complied with all applicable requirements specified in this Table.	

DOCUMENTATION AUTHOR'S DECLARATION STATEMENT

1. I certify that this Certificate of Installation documentation is accurate and complete.

Documentation Author Name:	Documentation Author Signature:
Documentation Author Company Name:	Date Signed:
Address:	CEA/HERS Certification Identification (If applicable):
City/State/Zip:	Phone:

RESPONSIBLE PERSON'S DECLARATION STATEMENT

I certify the following under penalty of perjury, under the laws of the State of California:

1. The information provided on this Certificate of Installation is true and correct.
2. I am eligible under Division 3 of the Business and Professions Code in the applicable classification to accept responsibility for the system design, construction, or installation of features, materials, components, or manufactured devices for the scope of work identified on this Certificate of Installation, and attest to the declarations in this statement (responsible builder/installer), otherwise I am an authorized representative of the responsible builder/installer.
3. The constructed or installed features, materials, components or manufactured devices (the installation) identified on this Certificate of Installation conforms to all applicable codes and regulations, and the installation conforms to the requirements given on the plans and specifications approved by the enforcement agency.
4. I reviewed a copy of the Certificate of Compliance approved by the enforcement agency that identifies the specific requirements for the scope of construction or installation identified on this Certificate of Installation, and I have ensured that the requirements that apply to the construction or installation have been met.
5. I will ensure that a registered copy of this Certificate of Installation shall be posted, or made available with the building permit(s) issued for the building, and made available to the enforcement agency for all applicable inspections. I understand that a registered copy of this Certificate of Installation is required to be included with the documentation the builder provides to the building owner at occupancy.

Responsible Builder/Installer Name:	Responsible Builder/Installer Signature:	
Company Name: (Installing Subcontractor or General Contractor or Builder/Owner)	Position With Company (Title):	
Address:	CSLB License:	
City/State/Zip:	Phone	Date Signed:

For information and data collection only. Not valid until registered with a HERS provider

Installer Instructions

SOLAR HOT WATER HEATING SYSTEMS

1. Manufacturer Name - From Certificate of Compliance CF-1R-STH-01E or CF-1R-STH-02E
2. Model Number - From Certificate of Compliance CF-1R-STH-01E or CF-1R-STH-02E
3. SRCC Certification Number - From Certificate of Compliance CF-1R-STH-01E or CF-1R-STH-02E
4. Certification Type – Select either OG100 or OG 300 test procedure based on CF-1R submitted. For Systems that use the OG-100 method the program used to calculate the solar fraction should be listed.
5. Solar Fraction - From Certificate of Compliance CF-1R-STH-01E or CF-1R-STH-02E
6. Number of Collectors - From Certificate of Compliance CF-1R-STH-01E or CF-1R-STH-02E
7. Collector Size - From Certificate of Compliance CF-1R-STH-01E or CF-1R-STH-02E
8. Total Storage Volume – Total gallons for water heater and supplemental storage tanks.
9. Collector System orientation - From Certificate of Compliance CF-1R-STH-01E or CF-1R-STH-02E
10. Collector system tilt - From Certificate of Compliance CF-1R-STH-01E or CF-1R-STH-02E

SRCC OG-100 CERTIFIED COLLECTORS - the installed system shall meet the following eligibility criteria

1. Collector System orientation from true south is within 5 degrees of the value listed above. Declination from true north for the site should be calculated and included in this measurement
2. Collector should be modeled with a tilt within 10 degrees of the value listed above.
3. The system shall have the same collectors, pumps, controls, storage tank and backup water heater fuel type as the rated condition.
4. The collectors shall be located in a position that is not shaded by adjacent buildings or trees between 9:00 AM and 3:00 PM. Inspect site to determine if any structural component of the building, adjacent structures, or tree may shade the collector area.
5. Backup Storage tanks are insulated with either an internal R-13 (labeled on tank) or external R-16

SRCC OG-300 CERTIFIED SYSTEMS - the installed system shall meet the following eligibility criteria:

1. Collector System orientation shall be within 35 degree from true south Declination from true north for the site should be calculated and included in this measurement.
2. Collectors should be tilted be tilted at a slope of at least 3:12.
3. The system shall have the same collectors, pumps, controls, storage tank and backup water heater fuel type as the rated condition.
4. The collectors shall be located in a position that is not shaded by adjacent buildings or trees between 9:00 AM and 3:00 PM. Inspect site to determine if any structural component of the building, adjacent structures,

SIZING COMPLIANCE WITH MULTIFAMILY PRESCRIPTIVE REQUIREMENTS

1. For climate zones 1 through 9 only - the solar system has an annual solar savings fraction of 0.2. For climate zones 10 through 16 only – the solar system has an annual solar savings fraction of 0.35

SIZING COMPLIANCE WITH MULTIFAMILY PRESCRIPTIVE REQUIREMENTS

1. Solar System must have an annual solar fraction of at least 50 percent.
2. The site must not have natural gas available, meaning that unless right of way is not reasonable attainable natural gas supply lines cannot be located within 100 feet or under the street, whichever is closer.

MANDATORY MEASURES FOR SOLAR WATER HEATING SYSTEMS

1. Verify that collectors are SRCC certified
2. Verify that all storage tanks that are part of the solar system are insulated with either R-12 external insulation or labeled that they have at least R-19 internal insulation
3. Verify that all piping in the solar system meets minimal insulation levels per (§150(j)2A)

For information and data collection only. Not valid until registered with a HERS Provider

BUILDING LEAKAGE DIAGNOSTIC TEST

CERTIFICATE OF VERIFICATION		CF3R-ENV-20-H
Building Leakage Diagnostic Test		(Page 1 of 2)
Project Name:	Enforcement Agency:	Permit Number:
Dwelling Address:	City	Zip Code

A. Building Air Leakage – General Information		
01	Test Procedure Used:	
02	Building Air Leakage Target from CF1R	
03	Indoor Temperature During Test (degreeF)	
04	Outdoor Temperature During Test (degreeF)	
05	Blower Door Location	
06	Building Elevation (ft)	
07	Building Volume (ft3)	
08	Date of the Diagnostic Test for this Dwelling	

B. Diagnostic Equipment Information		
01	Number of Fans Used to Pressurize Home	
02	Fan #1	
03	Manometer Make	
04	Manometer Model	
05	Manometer Serial Number	
06	Manometer Calibration Date	
07	Manometer Calibration Status	
08	Fan Make	
09	Fan Model	
10	Fan Serial Number	

C. Envelope Leakage Diagnostic Test - ENV20a - Single Point Air Tightness Test With Manual Meter		
01	Time average period of meter	
02	Average Baseline Building Pressure Reading #1	
03	Average Baseline Building Pressure Reading #2	
04	Average Baseline Building Pressure Reading #3	
05	Average Baseline Building Pressure Reading #4	
06	Average Baseline Building Pressure Reading #5	
07	Baseline Range	
08	Accuracy Level	
09	Average Baseline Building Pressure Reading	
10	Pre-test baseline building pressure	
11	Unadjusted Building Pressure Target	
12	Unadjusted Building Pressure Measured	
13	Induced building pressure	
14	Nominal Fan flow at above fan pressure	
15	Fan configuration (rings)	
16	Nominal CFM50	

D. Altitude and Temperature Correction		
01	Altitude correction factor	
02	Temperature correction factor	
03	Corrected CFM50	

E. Accuracy Adjustment		
01	Extending factor	
02	Adjusted CFM50 (measured air leakage rate)	

F. Compliance Statement

For information and data collection only. Not valid until registered with a HERS provider

CERTIFICATE OF VERIFICATION		CF3R-ENV-20-H
Building Leakage Diagnostic Test		(Page 2 of 2)
Project Name:	Enforcement Agency:	Permit Number:
Dwelling Address:	City	Zip Code

G. Additional Requirements For Compliance	
The responsible persons signature on this document indicates that the following was completed before a blower-door test began:	
01	Open all interior doors and access including those to closets and those between a conditioned basement and attic.
02	HVAC Supply and return register dampers shall be fully open.
03	Temporarily sealing of combustion flues and intermittent exhaust fans are not allowed. Some examples are: combustion flues, fresh air intakes, dryer vents, bathroom and kitchen exhaust vents and fire place.
04	Continuously operated ventilation devices like energy recovery ventilators may be sealed.
05	Multifamily – Each dwelling unit must be tested individually and shown to meet the leakage requirements. Pressurization of the adjacent dwelling units while conducting this test is not allowed.

DOCUMENTATION AUTHOR'S DECLARATION STATEMENT

1. I certify that this Certificate of Verification documentation is accurate and complete.

Documentation Author Name:	Documentation Author Signature:
Company:	Date Signed:
Address:	CEA/HERS Certification Information (if applicable):
City/State/Zip:	Phone:

RESPONSIBLE PERSON'S DECLARATION STATEMENT

I certify the following under penalty of perjury, under the laws of the State of California:

1. The information provided on this Certificate of Verification is true and correct.
2. I am the certified HERS Rater who performed the verification identified and reported on this Certificate of Verification (responsible rater).
3. The installed features, materials, components, manufactured devices, or system performance diagnostic results that require HERS verification identified on this Certificate of Verification comply with the applicable requirements in Reference Appendices RA2, RA3, and the requirements specified on the Certificate of Compliance for the building approved by the enforcement agency.
4. The information reported on applicable sections of the Certificate(s) of Installation (CF2R) signed and submitted by the person(s) responsible for the construction or installation conforms to the requirements specified on the Certificate(s) of Compliance (CF1R) approved by the enforcement agency.
5. I will ensure that a registered copy of this Certificate of Verification shall be posted, or made available with the building permit(s) issued for the building, and made available to the enforcement agency for all applicable inspections. I understand that a registered copy of this Certificate of Verification is required to be included with the documentation the builder provides to the building owner at occupancy.

BUILDER OR INSTALLER INFORMATION AS SHOWN ON THE CERTIFICATE OF INSTALLATION

Company Name (Installing Subcontractor, General Contractor, or Builder/Owner):	
Responsible Builder or Installer Name:	CSLB License:

HERS PROVIDER DATA REGISTRY INFORMATION

Sample Group Number (if applicable):	Dwelling Test Status in Sample Group (if applicable)

HERS RATER INFORMATION

HERS Rater Company Name:	
Responsible Rater Name:	Responsible Rater Signature:
Responsible Rater Certification Number w/ this HERS Provider	Date Signed:

For information and data collection only. Not valid until registered with a HERS provider.

Instructions for ENV20

Section A. Building Air Leakage – General Information

1. Select the appropriate test procedure. This selection will determine which version of this document will be used (a, b, c, d, or e) and therefore which data must be collected. Note that single-point tests can only be used under certain conditions. Note that newer manometers have automatic functions for compensating for baseline (automatic baseline) and compensating for house pressures other than the target (@50 Pa). It is preferable to use these, when available, however if these automatic functions are to be used, they must be used for BOTH automatic baseline and pressure compensation.
2. This number is automatically pulled from the performance approach Certificate of Compliance and is the target maximum that was entered by the documentation author. If this number cannot be achieved, the performance compliance calculations can be redone with a higher number or without the requirement for building air leakage.
3. Enter the indoor temperature measured at the time that the building air leakage test was performed.
4. Enter the outdoor temperature measured at the time that the building air leakage test was performed.
5. Provide a brief description of the location where the blower door was installed for the test. Examples: "front entry door on west side of house", "door between house and garage", "large window in family room".
6. Enter the building elevation use the value for the closest city found in Joint Appendix JA2.2. Only elevations higher than 5000 feet require an adjustment to the calculations.
7. This number is automatically pulled from the performance approach Certificate of Compliance. It is used to calculate air changes.
8. Enter the date that the building leakage test data was collected.

Section B. Diagnostic Equipment Information

1. Enter the number of blower door fan systems required to run simultaneously to pressurize the home for the building air leakage test. If more than one system is used, the fan flow numbers need to be manually added together, unless blower door software is used that will accommodate multiple fan systems running simultaneously.
2. Enter the appropriate information for each fan system used in the following rows.
3. Enter the make (brand) of the manometer used to collect the building air leakage data. Examples: Retrotec, Energy Conservatory.
4. Enter the model of the manometer used to collect the building air leakage data. Examples: DM-2 Mark II, DG700.
5. Enter the serial number of the manometer used to collect the building air leakage data.
6. Enter the most recent date that the manometer was calibrated by following manufacturer's calibration specifications.
7. This field is automatically filled. If the calibration date was more than 12 months prior to the test date entered in Row A.8, above, an error will appear.
8. Enter the make (brand) of the fan used to collect the building air leakage data. Examples: Retrotec, Energy Conservatory.
9. Enter the model of the fan used to collect the building air leakage data. Examples: US1000, Q46, BD3, BD4.

Section C. Envelope Leakage Test (ENV20a)

1. Enter the time average period used on the manometer during the test. Must be at least 10 seconds.
2. Enter the first of five baseline building pressure readings.
3. Enter the second of five baseline building pressure readings.
4. Enter the third of five baseline building pressure readings.
5. Enter the fourth of five baseline building pressure readings.
6. Enter the fifth of five baseline building pressure readings.
7. This field is automatically calculated when using the online form. The equation used to calculate this value in the field equals [Largest value of (C. 2 through C. 6)] –[smallest value of (C. 2 through C. 6)] = Baseline Range
8. This field is automatically calculated when using the online form. The values entered the field C. 8 equals a. if row C. 7 > 5.0, enter "Standard"; b. if row C. 7 ≥ 5 and ≤ 10, enter "Reduced"; c. if row C. 7 > 10, "**cannot use single-point test", do not proceed**.
9. This field is automatically calculated when using the online form. The equation used to calculate this value in the field equals (C.2+ C.3+ C.4+ C.5+ C.6)/5 = Average Baseline Building Pressure Reading
10. Enter the pre-test baseline building pressure. The protocols allow the average from Row C.9 or a newly measured number to be used.
11. This field is automatically calculated when using the online form. The equation used to calculate this value in the field equals -50pa – C.9 = Pre-test building pressure
12. Enter the measured unadjusted building pressure straight from the manometer. It should be as close to the target from Row C.11 as possible. Note that the protocols require depressurization of the envelope. All blower door induced pressures are to be negative relative to outside.
13. This field is automatically calculated when using the online form. The equation used to calculate this value in the field equals Row C.12 – C.9 = Induced Building pressure.
14. Enter the fan flow from the manometer that corresponds to the measured unadjusted building pressure from Row C.12.
15. Enter the fan configuration (rings) that was used during the data acquisition. Examples: Ring A, Ring A1
16. This field is automatically calculated when using the online form. The equation used to calculate this value in the field equals (50/Row C.13) ^0.65 x row C. 14 = Nominal CFM50

For information and data collection only. Not valid until registered with a HERS provider

Section D. Altitude and Temperature Correction

1. This field is automatically calculated when using the online form. The equation used to calculate this value in the field equals:
   a. If the elevation entered in Row A.6 ≤ 5,000 ft, then enter 1 as altitude correction in box D. 1
   b. If the elevation entered in Row A.6 > 5,000 ft, altitude correction equation equals 1 + (0.000006 * A.6)
2. Enter the temperature correction factor from Table RA3.8-2 or RA3.8-3 using the indoor and outdoor temperatures entered in Rows A.3 and A.4.

Table RA3.8-2 ***Temperature Correction Factors for Depressurization Testing****- Calculated according to ASTM E779-10*

		Inside Temperature (F)								
		50	**55**	**60**	**65**	**70**	**75**	**80**	**85**	**90**
Outside Temp (F)	**-20**	1.062	1.072	1.081	1.090	1.099	1.108	1.117	1.127	1.136
	-15	1.056	1.066	1.075	1.084	1.093	1.102	1.111	1.120	1.129
	-10	1.051	1.060	1.069	1.078	1.087	1.096	1.105	1.114	1.123
	-5	1.045	1.054	1.063	1.072	1.081	1.090	1.099	1.108	1.117
	0	1.039	1.048	1.057	1.066	1.075	1.084	1.093	1.102	1.111
	5	1.033	1.042	1.051	1.060	1.069	1.078	1.087	1.096	1.105
	10	1.028	1.037	1.046	1.055	1.064	1.072	1.081	1.090	1.099
	15	1.023	1.031	1.040	1.049	1.058	1.067	1.076	1.084	1.093
	20	1.017	1.026	1.035	1.044	1.052	1.061	1.070	1.079	1.087
	25	1.012	1.021	1.029	1.038	1.047	1.056	1.064	1.073	1.082
	30	1.007	1.015	1.024	1.033	1.041	1.050	1.059	1.067	1.076
	35	1.002	1.010	1.019	1.028	1.036	1.045	1.054	1.062	1.071
	40	0.997	1.005	1.014	1.023	1.031	1.040	1.048	1.057	1.065
	45	0.992	1.000	1.009	1.017	1.026	1.035	1.043	1.051	1.060
	50	0.987	0.995	1.004	1.012	1.021	1.029	1.038	1.046	1.055
	55	0.982	0.990	0.999	1.008	1.016	1.024	1.033	1.041	1.050
	60	0.997	0.986	0.994	1.003	1.011	1.019	1.028	1.036	1.045
	65	0.973	0.981	0.989	0.998	1.006	1.015	1.023	1.031	1.040
	70	0.968	0.976	0.985	0.993	1.001	1.010	1.018	1.026	1.035
	75	0.963	0.972	0.980	0.988	0.997	1.005	1.013	1.022	1.030
	80	0.959	0.967	0.976	0.984	0.992	1.000	1.009	1.017	1.025
	85	0.955	0.963	0.971	0.979	0.988	0.996	1.004	1.012	1.020
	90	0.950	0.958	0.967	0.975	0.983	0.991	0.999	1.008	1.016
	95	0.946	0.954	0.962	0.970	0.979	0.987	0.995	1.003	1.011
	100	0.942	0.950	0.958	0.966	0.970	0.982	0.990	0.998	1.007
	105	0.938	0.946	0.954	0.962	0.970	0.978	0.986	0.994	1.002
	110	0.933	0.942	0.950	0.952	0.966	0.974	0.982	0.990	0.998

Table RA3.8-3 ***Temperature Correction Factors for Pressurization Testing****- Calculated according to ASTM E779-10*

		Inside Temperature (F)								
		50	**55**	**60**	**65**	**70**	**75**	**80**	**85**	**90**
Outside Temp (F)	**-20**	0.865	0.861	0.857	0.853	0.849	0.845	0.841	0.837	0.833
	-15	0.874	0.870	0.866	0.862	0.858	0.854	0.850	0.846	0.842
	-10	0.883	0.879	0.874	0.870	0.866	0.862	0.858	0.854	0.850
	-5	0.892	0.887	0.883	0.879	0.875	0.871	0.867	0.863	0.859
	0	0.900	0.896	0.892	0.887	0.883	0.879	0.875	0.871	0.867
	5	0.909	0.905	0.900	0.896	0.892	0.888	0.883	0.879	0.875
	10	0.918	0.913	0.909	0.905	0.900	0.896	0.892	0.888	0.884
	15	0.927	0.922	0.918	0.913	0.909	0.905	0.900	0.896	0.892
	20	0.935	0.931	0.926	0.922	09.17	0.913	0.909	0.905	0.900
	25	0.944	0.939	0.935	0.930	0.926	0.922	0.917	0.913	0.909
	30	0.952	0.948	0.943	0.939	0.934	0.930	0.926	0.921	0.917
	35	0.961	0.956	0.952	0.947	0.943	0.938	0.934	0.930	0.926
	40	0.970	0.965	0.960	0.956	0.951	0.947	0.942	0.938	0.934
	45	0.978	0.974	0.961	0.964	0.960	0.955	0.951	0.946	0.942
	50	0.987	0.982	0.977	0.973	0.968	0.963	0.959	0.955	0.950
	55	0.995	0.990	0.986	0.981	0.976	0.972	0.967	0.963	0.958
	60	1.004	0.999	0.994	0.998	0.985	0.980	0.976	0.971	0.967
	65	1.012	1.008	1.003	0.998	0.993	0.988	0.984	0.979	0.975
	70	1.021	1.016	1.011	1.006	1.001	0.997	0.992	0.988	0.983
	75	1.029	1.024	1.019	1.015	1.010	1.005	1.000	0.996	0.991
	80	1.038	1.033	1.028	1.023	1.018	1.013	1.009	1.004	0.999
	85	1.046	1.041	1.036	1.031	1.026	1.022	1.017	1.012	1.008
	90	1.055	1.050	1.045	1.040	1.035	1.030	1.025	1.020	1.016
	95	1.063	1.058	1.053	1.048	1.043	1.038	1.033	1.028	1.024
	100	1.072	1.066	1.061	1.056	1.051	1.046	1.041	1.037	1.032
	105	1.080	1.075	1.070	1.064	1.059	1.054	1.050	1.045	1.040
	110	1.088	1.083	1.078	1.073	1.068	1.063	1.058	1.053	1.048

For information only. Not valid unless signed with a HERS pro license

3. This field is automatically calculated when using the online form. The equation used to calculate this value in the field equals the product of D.1 * D.2 * C.16.

Section E. Accuracy Adjustment

1. This field is automatically calculated when using the online form. The equation used to calculate this value in the field equals:
    c. If the accuracy level C.8 = Standard, then enter 1 as accuracy adjustment in box E. 1
    d. If the accuracy level C.8 = Reduced, accuracy adjustment equation equals 1+[0.1+(50/C. 14)]
2. This field is automatically calculated when using the online form. The equation used to calculate this value in the field equals the D.3 * E.1. = Adjusted CFM50 **Note -** This is the number that must be less than or equal to the target building air leakage from the CF-1R, shown in Row A.2.

For information and data collection only. Not valid until registered with a HERS provider

A. Building Air Leakage – General Information		
01	Test Procedure Used:	<<user input, pull down list: Single-Point Test with Manual Meter – Display MECH20-a below, adding lines C. 12-16; Single-Point Test with Automatic Meter – Display MECH20-b below, removing lines C. 12-16; Multi-Point Test – Display MECH20-c below; Repeated Single Point with Manual Meter – Display MECH20-d below; Repeated Single Point with Automatic Meter – Display MECH20-e below
02	Building Air Leakage Target from CF1R	<<number pulled from CF1R
03	Indoor temperature during test (degreeF)	<<user input, degF>>
04	Outdoor temperature during test (degreeF)	<<user input, degF>>
05	Blower door location	<<user input, text, maximum 50 characters>>
06	Building Elevation (ft)	<<user input, Ft>>
07	Building Volume (ft3)	<<pull from CF-1R>>
08	Date of the diagnostic test for this dwelling	<<user input: date (use date format validation control)>>

B. Diagnostic Equipment Information		
01	Number of Fans Used to Pressurize Home	<<user input, integer>> For entries >1, duplicate lines B. 2-6
02	Fan #1	<<repeat lines below for each fan>>
03	Manometer Make	<<user input, text, maximum 50 characters>>
04	Manometer Model	<<user input, text, maximum 50 characters>>
05	Manometer Serial Number	<<user input, text, maximum 50 characters>>
06	Manometer Calibration Date	<<user input, text, maximum 50 characters>>
07	Manometer Calibration Status	<<calculated field: if manometer Calibration Date in B6 is within 12 months of the date of the diagnostic test A. 8, then display message: Manometer Calibration is valid"; else display message: "WARNING - Manometer Calibration is expired. A manometer with current calibration is required in order to comply with this building Leakage Diagnostic test">>
08	Fan Make	<<user input, text, maximum 50 characters>>
09	Fan Model	<<user input, text, maximum 50 characters>>
10	Fan Serial Number	<<user input, text, maximum 50 characters>>

C. Envelope Leakage Diagnostic Test - ENV20a - Single Point Air Tightness Test With Manual Meter - <<only used if this test is selected on row A. 1>>		
01	Time average period of meter	<<user entry but must be no less than 10, in second>>
02	Average Baseline Building Pressure Reading #1	<<user entry, Pa>>
03	Average Baseline Building Pressure Reading #2	<<user entry, Pa>>
04	Average Baseline Building Pressure Reading #3	<<user entry, Pa>>
05	Average Baseline Building Pressure Reading #4	<<user entry, Pa>>
06	Average Baseline Building Pressure Reading #5	<<user entry, Pa>>
07	Baseline Range	<<calculated, subtract the lowest of rows C. 2-6 from the highest of rows C. 2-6>>
08	Accuracy Level	<<calculated, if row C. 7 > 5.0, then “Standard”; if row C. 7 ≥ 5 and ≤ 10, then “Reduced”, if row C. 7 > 10, “cannot use single-point test”, do not proceed.>>
09	Average Baseline Building Pressure Reading	<< calculated average rows C. 2-6>>
10	Pre-test baseline building pressure	<<user input OR row C. 9, Pa>>
11	Unadjusted Building Pressure Target	<<calculated value, -50 + row C. 9>>
12	Unadjusted Building Pressure Measured	<<user entered value, Pa>>
13	Induced building pressure	<<calculated value, row C. 12 – row C. 9, if greater than -15 pa, “Induced pressure too low for single point test” and do not proceed>>
14	Nominal Fan flow at above fan pressure	<<user entered value, (cfm)>>
15	Fan configuration (rings)	<<user entered value, could be a pull down menu based on fan model>>
16	Nominal CFM50	<<calculated value, (50/ row C. 13) ^0.65 x row C. 14>>

For information and data collection only. Not valid until reviewed with a HERS provider.

D. Altitude and Temperature Correction		
01	Altitude correction factor	<<calculated value, if row A. 6 ≤ 5000 Ft = 1; row A. 6 > 5000 =, 1 + .000006 * row A. 6
02	Temperature correction factor	<<from tables RA3.8-2 and RA3.8-3 >>
03	Corrected CFM50	<<calculated value, Row C. 16*altitude correction D. 1 * temperature correction D. 2>>

E. Accuracy Adjustment		
01	Extending factor	<<calculated value, if row C. 8 is “Standard” = 1; row C. 8 is “Reduced” = 1+0.1*[50/(row C. 14)]>>
02	Adjusted CFM50 (measured air leakage rate)	<<calculated, row D. 3* row E. 1>>

F. Compliance Statement
<< if manometer Calibration Date in B. 6 is within 12 months of the date of the diagnostic test A. 8 and if Adjusted CFM50 Leakage in E. 2 is less than or equal to the Building Air Leakage Rate Target in A. 2 then display text: "Building Passes Envelope Leakage Test"; if manometer Calibration Date in B. 6 is more than 12 months from the date of the diagnostic test a. 8 or if Adjusted CFM50 Leakage in E. 2 is more than the Building Air Leakage Rate Target in A. 2 then display text: "Building Fails Envelope Leakage Test">>

G. Additional Requirements For Compliance	
The responsible persons signature on this document indicates that the following was completed before a blower-door test began:	
01	Open all interior doors and access including those to closets and those between a conditioned basement and attic.
02	HVAC Supply and return register dampers shall be fully open.
03	Temporarily sealing of combustion flues and intermittent exhaust fans are not allowed. Some examples are: combustion flues, fresh air intakes, dryer vents, bathroom and kitchen exhaust vents and fire place.
04	Continuously operated ventilation devices like energy recovery ventilators may be sealed.
05	Multifamily – Each dwelling unit must be tested individually and shown to meet the leakage requirements. Pressurization of the adjacent dwelling units while conducting this test is not allowed.

For information and data collection only. Not valid until reviewed with a HERS provider

BUILDING LEAKAGE DIAGNOSTIC TEST

CERTIFICATE OF VERIFICATION		CF3R-ENV-20-H
Building Leakage Diagnostic Test		(Page 1 of 3)
Project Name:	Enforcement Agency:	Permit Number:
Dwelling Address:	City	Zip Code

A. Building Air Leakage – General Information		
01	Test Procedure Used:	
02	Building Air Leakage Target from CF1R	
03	Indoor temperature during test (degreeF)	
04	Outdoor temperature during test (degreeF)	
05	Blower door location	
06	Building Elevation (ft)	
07	Building Volume (ft3)	
08	Date of the diagnostic test for this dwelling	

B. Diagnostic Equipment Information		
01	Number of Fans Used to Pressurize Home	
02	Fan #1	
03	Manometer Make	
04	Manometer Model	
05	Manometer Serial Number	
06	Manometer Calibration Date	
07	Manometer Calibration Status	
08	Fan Make	
09	Fan Model	
10	Fan Serial Number	

C. Envelope Leakage Diagnostic Test - ENV20b - Single Point Air Tightness Test With Automatic Meter		
01	Time average period of meter	
02	Baseline Building Pressure Reading #1	
03	Baseline Building Pressure Reading #2	
04	Baseline Building Pressure Reading #3	
05	Baseline Building Pressure Reading #4	
06	Baseline Building Pressure Reading #5	
07	Baseline Range	
08	Accuracy Level	
09	Average Baseline Building Pressure Reading	
10	Pre-test baseline building pressure	
11	Induced building pressure, Target=-50 Pa	
12	Nominal CFM50	

D. Altitude and Temperature Correction		
01	Altitude correction factor	
02	Temperature correction factor	
03	Corrected CFM50	

E. Accuracy Adjustment		
01	Extending factor	
02	Adjusted CFM50 (measured air leakage rate)	

For information and data collection only. Not valid until registered with a HERS provider

CERTIFICATE OF VERIFICATION		CF3R-ENV-20-H
Building Leakage Diagnostic Test		(Page 2 of 3)
Project Name:	Enforcement Agency:	Permit Number:
Dwelling Address:	City	Zip Code

F. Compliance Statement
<< if manometer Calibration Date in B. 6 is within 12 months of the date of the diagnostic test A. 8 and if Adjusted CFM50 Leakage in E. 2 is less than or equal to the Building Air Leakage Rate Target in A. 2 then display text: "Building Passes Envelope Leakage Test"; if manometer Calibration Date in B. 6 is more than 12 months from the date of the diagnostic test A. 8 or if Adjusted CFM50 Leakage in E. 2 is more than the Building Air Leakage Rate Target in A. 2 then display text: "Building Fails Envelope Leakage Test">>

G. Additional Requirements For Compliance	
The responsible persons signature on this document indicates that the following was completed before a blower-door test began:	
01	Open all interior doors and access including those to closets and those between a conditioned basement and attic.
02	HVAC Supply and return register dampers shall be fully open.
03	Temporarily sealing of combustion flues and intermittent exhaust fans are not allowed. Some examples are: combustion flues, fresh air intakes, dryer vents, bathroom and kitchen exhaust vents and fire place.
04	Continuously operated ventilation devices like energy recovery ventilators may be sealed.
05	Multifamily – Each dwelling unit must be tested individually and shown to meet the leakage requirements. Pressurization of the adjacent dwelling units while conducting this test is not allowed.

For information and data collec
only. Not valid until registered with
HERS provider

CERTIFICATE OF VERIFICATION		CF3R-ENV-20-H
Building Leakage Diagnostic Test		(Page 3 of 3)
Project Name:	Enforcement Agency:	Permit Number:
Dwelling Address:	City	Zip Code

DOCUMENTATION AUTHOR'S DECLARATION STATEMENT	
1. I certify that this Certificate of Verification documentation is accurate and complete.	
Documentation Author Name:	Documentation Author Signature:
Company:	Date Signed:
Address:	CEA/HERS Certification Information (if applicable):
City/State/Zip:	Phone:

RESPONSIBLE PERSON'S DECLARATION STATEMENT

I certify the following under penalty of perjury, under the laws of the State of California:

1. The information provided on this Certificate of Verification is true and correct.
2. I am the certified HERS Rater who performed the verification identified and reported on this Certificate of Verification (responsible rater).
3. The installed features, materials, components, manufactured devices, or system performance diagnostic results that require HERS verification identified on this Certificate of Verification comply with the applicable requirements in Reference Appendices RA2, RA3, and the requirements specified on the Certificate of Compliance for the building approved by the enforcement agency.
4. The information reported on applicable sections of the Certificate(s) of Installation (CF2R) signed and submitted by the person(s) responsible for the construction or installation conforms to the requirements specified on the Certificate(s) of Compliance (CF1R) approved by the enforcement agency.
5. I will ensure that a registered copy of this Certificate of Verification shall be posted, or made available with the building permit(s) issued for the building, and made available to the enforcement agency for all applicable inspections. I understand that a registered copy of this Certificate of Verification is required to be included with the documentation the builder provides to the building owner at occupancy.

BUILDER OR INSTALLER INFORMATION AS SHOWN ON THE CERTIFICATE OF INSTALLATION	
Company Name (Installing Subcontractor, General Contractor, or Builder/Owner):	
Responsible Builder or Installer Name:	CSLB License:
HERS PROVIDER DATA REGISTRY INFORMATION	
Sample Group Number (if applicable):	Dwelling Test Status in Sample Group (if applicable)
HERS RATER INFORMATION	
HERS Rater Company Name:	
Responsible Rater Name:	Responsible Rater Signature:
Responsible Rater Certification Number w/ this HERS Provider	Date Signed:

For information and data collection only. Not valid until registered with a HERS provider

Instructions for ENV20b

Section A. Building Air Leakage – General Information

1. Select the appropriate test procedure. This selection will determine which version of this document will be used (a, b, c, d, or e) and therefore which data must be collected. Note that single-point tests can only be used under certain conditions. Note that newer manometers have automatic functions for compensating for baseline (automatic baseline) and compensating for house pressures other than the target (@50 Pa). It is preferable to use these, when available, however if these automatic functions are to be used, they must BOTH be used.
2. This number is automatically pulled from the performance approach Certificate of Compliance and is the target maximum that was entered by the documentation author. If this number cannot be achieved, the performance compliance calculations can be redone with a higher number or without the requirement for building air leakage.
3. Enter the indoor temperature measured at the time that the building air leakage test was performed.
4. Enter the outdoor temperature measured at the time that the building air leakage test was performed.
5. Provide a brief description of the location where the blower door was installed for the test. Examples: "front entry door on west side of house", "door between house and garage", "large window in family room".
6. Enter the building elevation use the value for the closest city found in Joint Appendix JA2.2. Only elevations higher than 5000 feet require an adjustment to the calculations.
7. This number is automatically pulled from the performance approach Certificate of Compliance. It is used to calculate air changes.
8. Enter the date that the building leakage test data was collected.

Section B. Diagnostic Equipment Information

1. Enter the number of blower door fan systems required to run simultaneously to pressurize the home for the building air leakage test. If more than one system is used, the fan flow numbers need to be manually added together, unless blower door software is used that will accommodate multiple fan systems running simultaneously.
2. Enter the appropriate information for each fan system used in the following rows.
3. Enter the make (brand) of the manometer used to collect the building air leakage data. Examples: Retrotec, Energy Conservatory.
4. Enter the model of the manometer used to collect the building air leakage data. Examples: DM-2 Mark II, DG700.
5. Enter the serial number of the manometer used to collect the building air leakage data.
6. Enter the most recent date that the manometer was calibrated by following manufacturer's calibration specifications.
7. This field is automatically filled. If the calibration date was more than 12 months prior to the test date entered in Row A.8, above, an error will appear.
8. Enter the make (brand) of the fan used to collect the building air leakage data. Examples: Retrotec, Energy Conservatory.
9. Enter the model of the fan used to collect the building air leakage data. Examples: US1000, Q46, BD3, BD4.
10. Enter the serial number of the fan used to collect the building air leakage data.

Section C. Envelope Leakage Test (ENV20b)

1. Enter the time average period used on the manometer during the test. Must be at least 10 seconds.
2. Enter the first of five baseline building pressure readings.
3. Enter the second of five baseline building pressure readings.
4. Enter the third of five baseline building pressure readings.
5. Enter the fourth of five baseline building pressure readings.
6. Enter the fifth of five baseline building pressure readings.
7. This field is automatically calculated when using the online form. The equation used to calculate this value in the field equals [Largest value of (C. 2 through C. 6)] –[smallest value of (C. 2 through C. 6)] = Baseline Range
8. This field is automatically calculated when using the online form. The values entered the field C. 8 equals a. if row C. 7 > 5.0, enter "Standard"; b. if row C. 7 ≥ 5 and ≤ 10, enter "Reduced"; c. if row C. 7 > 10, "**cannot use single-point test", do not proceed**.
9. This field is automatically calculated when using the online form. The equation used to calculate this value in the field equals (C.2+ C.3+ C.4+ C.5+ C.6)/5 = Average Baseline Building Pressure Reading
10. Enter the pre-test baseline building pressure. The protocols allow the average from Row C.9 or a newly measured number to be used. Note that the automatic baseline and @50 Pa functions must both be turned ON for this test.
11. Enter the induced building pressure from the manometer. It should be as close to -50 Pa as possible but no smaller (absolute) than minus 15 Pa. Note that the protocols require depressurization of the envelope. All blower door induced pressures are to be negative relative to outside. Note that the automatic baseline and @50 Pa functions must both be turned ON for this test.
12. Enter the fan flow from the manometer that corresponds to the measured unadjusted building pressure from Row C.11. Note that the automatic baseline and @50 Pa functions must both be turned ON for this test.

Section D. Altitude and Temperature Correction

1. This field is automatically calculated when using the online form. The equation used to calculate this value in the field equals:
    a. If the elevation entered in Row A.6 ≤ 5,000 ft, then enter 1 as altitude correction in box D. 1
    b. If the elevation entered in Row A.6 > 5,000 ft, altitude correction equation equals 1 + (0.000006 * A.6)

For information and data collection only. Not valid until registered with a HERS provider

2. Enter the temperature correction factor from Table RA3.8-2 or RA3.8-3 using the indoor and outdoor temperatures entered in Rows A.3 and A.4.

Table RA3.8-2 ***Temperature Correction Factors for Depressurization Testing****- Calculated according to ASTM E779-10*

		Inside Temperature (F)								
		50	**55**	**60**	**65**	**70**	**75**	**80**	**85**	**90**
Outside Temp (F)	**-20**	1.062	1.072	1.081	1.090	1.099	1.108	1.117	1.127	1.136
	-15	1.056	1.066	1.075	1.084	1.093	1.102	1.111	1.120	1.129
	-10	1.051	1.060	1.069	1.078	1.087	1.096	1.105	1.114	1.123
	-5	1.045	1.054	1.063	1.072	1.081	1.090	1.099	1.108	1.117
	0	1.039	1.048	1.057	1.066	1.075	1.084	1.093	1.102	1.111
	5	1.033	1.042	1.051	1.060	1.069	1.078	1.087	1.096	1.105
	10	1.028	1.037	1.046	1.055	1.064	1.072	1.081	1.090	1.099
	15	1.023	1.031	1.040	1.049	1.058	1.067	1.076	1.084	1.093
	20	1.017	1.026	1.035	1.044	1.052	1.061	1.070	1.079	1.087
	25	1.012	1.021	1.029	1.038	1.047	1.056	1.064	1.073	1.082
	30	1.007	1.015	1.024	1.033	1.041	1.050	1.059	1.067	1.076
	35	1.002	1.010	1.019	1.028	1.036	1.045	1.054	1.062	1.071
	40	0.997	1.005	1.014	1.023	1.031	1.040	1.048	1.057	1.065
	45	0.992	1.000	1.009	1.017	1.026	1.035	1.043	1.051	1.060
	50	0.987	0.995	1.004	1.012	1.021	1.029	1.038	1.046	1.055
	55	0.982	0.990	0.999	1.008	1.016	1.024	1.033	1.041	1.050
	60	0.997	0.986	0.994	1.003	1.011	1.019	1.028	1.036	1.045
	65	0.973	0.981	0.989	0.998	1.006	1.015	1.023	1.031	1.040
	70	0.968	0.976	0.985	0.993	1.001	1.010	1.018	1.026	1.035
	75	0.963	0.972	0.980	0.988	0.997	1.005	1.013	1.022	1.030
	80	0.959	0.967	0.976	0.984	0.992	1.000	1.009	1.017	1.025
	85	0.955	0.963	0.971	0.979	0.988	0.996	1.004	1.012	1.020
	90	0.950	0.958	0.967	0.975	0.983	0.991	0.999	1.008	1.016
	95	0.946	0.954	0.962	0.970	0.979	0.987	0.995	1.003	1.011
	100	0.942	0.950	0.958	0.966	0.970	0.982	0.990	0.998	1.007
	105	0.938	0.946	0.954	0.962	0.970	0.978	0.986	0.994	1.002
	110	0.933	0.942	0.950	0.952	0.966	0.974	0.982	0.990	0.998

Table RA3.8-3 ***Temperature Correction Factors for Pressurization Testing****- Calculated according to ASTM E779-10*

		Inside Temperature (F)								
		50	**55**	**60**	**65**	**70**	**75**	**80**	**85**	**90**
Outside Temp (F)	**-20**	0.865	0.861	0.857	0.853	0.849	0.845	0.841	0.837	0.833
	-15	0.874	0.870	0.866	0.862	0.858	0.854	0.850	0.846	0.842
	-10	0.883	0.879	0.874	0.870	0.866	0.862	0.858	0.854	0.850
	-5	0.892	0.887	0.883	0.879	0.875	0.871	0.867	0.863	0.859
	0	0.900	0.896	0.892	0.887	0.883	0.879	0.875	0.871	0.867
	5	0.909	0.905	0.900	0.896	0.892	0.888	0.883	0.879	0.875
	10	0.918	0.913	0.909	0.905	0.900	0.896	0.892	0.888	0.884
	15	0.927	0.922	0.918	0.913	0.909	0.905	0.900	0.896	0.892
	20	0.935	0.931	0.926	0.922	09.17	0.913	0.909	0.905	0.900
	25	0.944	0.939	0.935	0.930	0.926	0.922	0.917	0.913	0.909
	30	0.952	0.948	0.943	0.939	0.934	0.930	0.926	0.921	0.917
	35	0.961	0.956	0.952	0.947	0.943	0.938	0.934	0.930	0.926
	40	0.970	0.965	0.960	0.956	0.951	0.947	0.942	0.938	0.934
	45	0.978	0.974	0.961	0.964	0.960	0.955	0.951	0.946	0.942
	50	0.987	0.982	0.977	0.973	0.968	0.963	0.959	0.955	0.950
	55	0.995	0.990	0.986	0.981	0.976	0.972	0.967	0.963	0.958
	60	1.004	0.999	0.994	0.998	0.985	0.980	0.976	0.971	0.967
	65	1.012	1.008	1.003	0.998	0.993	0.988	0.984	0.979	0.975
	70	1.021	1.016	1.011	1.006	1.001	0.997	0.992	0.988	0.983
	75	1.029	1.024	1.019	1.015	1.010	1.005	1.000	0.996	0.991
	80	1.038	1.033	1.028	1.023	1.018	1.013	1.009	1.004	0.999
	85	1.046	1.041	1.036	1.031	1.026	1.022	1.017	1.012	1.008
	90	1.055	1.050	1.045	1.040	1.035	1.030	1.025	1.020	1.016
	95	1.063	1.058	1.053	1.048	1.043	1.038	1.033	1.028	1.024
	100	1.072	1.066	1.061	1.056	1.051	1.046	1.041	1.037	1.032
	105	1.080	1.075	1.070	1.064	1.059	1.054	1.050	1.045	1.040
	110	1.088	1.083	1.078	1.073	1.068	1.063	1.058	1.053	1.048

3. This field is automatically calculated when using the online form. The equation used to calculate this value in the field equals the product of D.1 * D.2 * C.16.

For information use only. Not suitable for certification with a Rater or Provider.

Section E. Accuracy Adjustment

1. This field is automatically calculated when using the online form. The equation used to calculate this value in the field equals:
    c. If the accuracy level C.8 = Standard, then enter 1 as accuracy adjustment in box E. 1
    d. If the accuracy level C.8 = Reduced, accuracy adjustment equation equals 1+[0.1+(50/C. 14)]
2. This field is automatically calculated when using the online form. The equation used to calculate this value in the field equals the D.3 * E.1. = Adjusted CFM50 **Note -** This is the number that must be less than or equal to the target building air leakage from the CF-1R, shown in Row A.2.

For information and data collection only. Not valid until registered with a HERS provider

A. Building Air Leakage – General Information		
01	Test Procedure Used:	<<user input, pull down list: Single-Point Test with Manual Meter – Display MECH20-a below, adding lines C. 12-16; Single-Point Test with Automatic Meter – Display MECH20-b below, removing lines C. 12-16; Multi-Point Test – Display MECH20-c below; Repeated Single Point with Manual Meter – Display MECH20-d below; Repeated Single Point with Automatic Meter – Display MECH20-e below
02	Building Air Leakage Target from CF1R	<<number pulled from CF1R
03	Indoor temperature during test (degreeF)	<<user input, degF>>
04	Outdoor temperature during test (degreeF)	<<user input, degF>>
05	Blower door location	<<user input, text, maximum 50 characters>>
06	Building Elevation (ft)	<<user input, Ft>>
07	Building Volume (ft3)	<<pull from CF1R>>
08	Date of the diagnostic test for this dwelling	<<user input: date (use date format validation control)>>

B. Diagnostic Equipment Information		
01	Number of Fans Used to Pressurize Home	<<user input, integer>> For entries >1, duplicate lines B. 2-6
02	Fan #1	<<repeat lines below for each fan>>
03	Manometer Make	<<user input, text, maximum 50 characters>>
04	Manometer Model	<<user input, text, maximum 50 characters>>
05	Manometer Serial Number	<<user input, text, maximum 50 characters>>
06	Manometer Calibration Date	<<user input, text, maximum 50 characters>>
07	Manometer Calibration Status	<<calculated field: if manometer Calibration Date in B. 6 is within 12 months of the date of the diagnostic test A. 8, then display message: Manometer Calibration is valid"; else display message: "WARNING - Manometer Calibration is expired. A manometer with current calibration is required in order to comply with this building Leakage Diagnostic test">>
08	Fan Make	<<user input, text, maximum 50 characters>>
09	Fan Model	<<user input, text, maximum 50 characters>>
10	Fan Serial Number	<<user input, text, maximum 50 characters>>

C. Envelope Leakage Diagnostic Test - ENV20b - Single Point Air Tightness Test With Automatic Meter - <<only used if this test is selected on row A. 1>>		
01	Time average period of meter	<<user entry but must be no less than 10, in second>>
02	Average Baseline Building Pressure Reading #1	<<user entry, Pa>>
03	Average Baseline Building Pressure Reading #2	<<user entry, Pa>>
04	Average Baseline Building Pressure Reading #3	<<user entry, Pa>>
05	Average Baseline Building Pressure Reading #4	<<user entry, Pa>>
06	Average Baseline Building Pressure Reading #5	<<user entry, Pa>>
07	Baseline Range	<<calculated, subtract the lowest of rows C. 2-6 from the highest of rows C. 2-6>>
08	Accuracy Level	<<calculated, if row C. 7 > 5.0, then “Standard”; if row C. 7 ≥ 5 and ≤ 10, then “Reduced”, if row C. 7 > 10, “cannot use single-point test”, do not proceed.>>
09	Average Baseline Building Pressure Reading	<< calculated average rows C. 2-6>>
10	Pre-test baseline building pressure	<<user input OR row C. 9, Pa>>
11	Induced building pressure, Target=-50 Pa	<<user entry, Pa, from manometer, if greater than -15 pa, “Induced pressure too low for single point test”, do not proceed>>
12	Nominal CFM50	<<user entry, CFM, from manometer>>".

D. Altitude and Temperature Correction		
01	Altitude correction factor	<<calculated value, if row A. 6 ≤ 5000 Ft = 1; row A. 6 > 5000 =, 1 + .000006 * row A. 6
02	Temperature correction factor	<<from tables RA3.8-2 and RA3.8-3 >>
03	Corrected CFM50	<<calculated value, Row C. 12*altitude correction D. 1 * temperature correction D. 2>>

For information and data collection only. Not valid until received with a HERS provider

E. Accuracy Adjustment		
01	Extending factor	<<calculated value, if row C. 8 is “Standard” = 1; row C. 8 is “Reduced” = 1+0.1*[50/(row C. 14)]>>
02	Adjusted CFM50 (measured air leakage rate)	<<calculated, row D. 3* row E. 1>>

F. Compliance Statement
<< if manometer Calibration Date in B. 6 is within 12 months of the date of the diagnostic test A. 8 and if Adjusted CFM50 Leakage in E. 2 is less than or equal to the Building Air Leakage Rate Target in A. 2 then display text: "Building Passes Envelope Leakage Test"; if manometer Calibration Date in B. 6 is more than 12 months from the date of the diagnostic test A. 8 or if Adjusted CFM50 Leakage in E. 2 is more than the Building Air Leakage Rate Target in A. 2 then display text: "Building Fails Envelope Leakage Test">>

G. Additional Requirements For Compliance	
The responsible persons signature on this document indicates that the following was completed before a blower-door test began:	
01	Open all interior doors and access including those to closets and those between a conditioned basement and attic.
02	HVAC Supply and return register dampers shall be fully open.
03	Temporarily sealing of combustion flues and intermittent exhaust fans are not allowed. Some examples are: combustion flues, fresh air intakes, dryer vents, bathroom and kitchen exhaust vents and fire place.
04	Continuously operated ventilation devices like energy recovery ventilators may be sealed.
05	Multifamily – Each dwelling unit must be tested individually and shown to meet the leakage requirements. Pressurization of the adjacent dwelling units while conducting this test is not allowed.

For information and data validation only. Not valid until registered HERS provider

BUILDING LEAKAGE DIAGNOSTIC TEST

CERTIFICATE OF VERIFICATION		CF3R-ENV-20-H
Building Leakage Diagnostic Test		(Page 1 of 3)
Project Name:	Enforcement Agency:	Permit Number:
Dwelling Address:	City	Zip Code

A. Building Air Leakage – General Information		
01	Test Procedure Used:	
02	Building Air Leakage Target from CF1R	
03	Indoor temperature during test (degreeF)	
04	Outdoor temperature during test (degreeF)	
05	Blower door location	
06	Building Elevation (ft)	
07	Building Volume (ft3)	
08	Date of the diagnostic test for this dwelling	

B. Diagnostic Equipment Information		
01	Number of Fans Used to Pressurize Home	
02	Fan #1	
03	Manometer Make	
04	Manometer Model	
05	Manometer Serial Number	
06	Manometer Calibration Date	
07	Manometer Calibration Status	
08	Fan Make	
09	Fan Model	
10	Fan Serial Number	

C. Envelope Leakage Diagnostic Test - ENV20c – Multi-Point Air Tightness Test		
01	Name and version of ASTM E779-10 compliant software used for multi-point test.	
02	Pre-test baseline building pressure	
03	Time average period of meter	
04	Unadjusted Building Pressure Target	
05	Unadjusted Building Pressure Measured	
06	Induced building pressure	
07	A minimum of eight readings were taken spaced evenly between 15 Pa and 60 Pa (or highest attainable pressure).	
08	Post-test baseline building pressure	
09	Corrected CFM50 (from software)	

D. Altitude and Temperature Correction (not used, performed by blower door software)

E. Accuracy Adjustment		
01	Percent uncertainty @ 95% confidence level (from software)	
02	Accuracy level	
03	Extending factor	
04	Adjusted CFM50 (measured air leakage rate)	

for information and data collection only. Not valid until registered with a HERS provider

CERTIFICATE OF VERIFICATION		CF3R-ENV-20-H
Building Leakage Diagnostic Test		(Page 2 of 3)
Project Name:	Enforcement Agency:	Permit Number:
Dwelling Address:	City	Zip Code

F. Compliance Statement
<< if manometer Calibration Date in B. 6 is within 12 months of the date of the diagnostic test A. 8 and if Adjusted CFM50 Leakage in E. 4 is less than or equal to the Building Air Leakage Rate Target in A. 2 then display text: "Building Passes Envelope Leakage Test"; if manometer Calibration Date in B. 6 is more than 12 months from the date of the diagnostic test A. 8 or if Adjusted CFM50 Leakage in E. 4 is more than the Building Air Leakage Rate Target in A. 2 then display text: "Building Fails Envelope Leakage Test">>

G. Additional Requirements For Compliance	
The responsible persons signature on this document indicates that the following was completed before a blower-door test began:	
01	Open all interior doors and access including those to closets and those between a conditioned basement and attic.
02	HVAC Supply and return register dampers shall be fully open.
03	Temporarily sealing of combustion flues and intermittent exhaust fans are not allowed. Some examples are: combustion flues, fresh air intakes, dryer vents, bathroom and kitchen exhaust vents and fire place.
04	Continuously operated ventilation devices like energy recovery ventilators may be sealed.
05	Multifamily – Each dwelling unit must be tested individually and shown to meet the leakage requirements. Pressurization of the adjacent dwelling units while conducting this test is not allowed.

For information and data collec
only. Not valid until registered with
HERS provider

CERTIFICATE OF VERIFICATION		CF3R-ENV-20-H
Building Leakage Diagnostic Test		(Page 3 of 3)
Project Name:	Enforcement Agency:	Permit Number:
Dwelling Address:	City	Zip Code

DOCUMENTATION AUTHOR'S DECLARATION STATEMENT	
1. I certify that this Certificate of Verification documentation is accurate and complete.	
Documentation Author Name:	Documentation Author Signature:
Company:	Date Signed:
Address:	CEA/HERS Certification Information (if applicable):
City/State/Zip:	Phone:

RESPONSIBLE PERSON'S DECLARATION STATEMENT

I certify the following under penalty of perjury, under the laws of the State of California:

1. The information provided on this Certificate of Verification is true and correct.
2. I am the certified HERS Rater who performed the verification identified and reported on this Certificate of Verification (responsible rater).
3. The installed features, materials, components, manufactured devices, or system performance diagnostic results that require HERS verification identified on this Certificate of Verification comply with the applicable requirements in Reference Appendices RA2, RA3, and the requirements specified on the Certificate of Compliance for the building approved by the enforcement agency.
4. The information reported on applicable sections of the Certificate(s) of Installation (CF2R) signed and submitted by the person(s) responsible for the construction or installation conforms to the requirements specified on the Certificate(s) of Compliance (CF1R) approved by the enforcement agency.
5. I will ensure that a registered copy of this Certificate of Verification shall be posted, or made available with the building permit(s) issued for the building, and made available to the enforcement agency for all applicable inspections. I understand that a registered copy of this Certificate of Verification is required to be included with the documentation the builder provides to the building owner at occupancy.

BUILDER OR INSTALLER INFORMATION AS SHOWN ON THE CERTIFICATE OF INSTALLATION	
Company Name (Installing Subcontractor, General Contractor, or Builder/Owner):	
Responsible Builder or Installer Name:	CSLB License:
HERS PROVIDER DATA REGISTRY INFORMATION	
Sample Group Number (if applicable):	Dwelling Test Status in Sample Group (if applicable)
HERS RATER INFORMATION	
HERS Rater Company Name:	
Responsible Rater Name:	Responsible Rater Signature:
Responsible Rater Certification Number w/ this HERS Provider	Date Signed:

For information and data collection only. Not valid until registered with a HERS provider

Instructions for ENV20c

Section A. Building Air Leakage – General Information

1. Select the appropriate test procedure. This selection will determine which version of this document will be used (a, b, c, d, or e) and therefore which data must be collected. Note that single-point tests can only be used under certain conditions. Note that newer manometers have automatic functions for compensating for baseline (automatic baseline) and compensating for house pressures other than the target (@50 Pa). It is preferable to use these, when available, however if these automatic functions are to be used, they must BOTH be used.
2. This number is automatically pulled from the performance approach Certificate of Compliance and is the target maximum that was entered by the documentation author. If this number cannot be achieved, the performance compliance calculations can be redone with a higher number or without the requirement for building air leakage.
3. Enter the indoor temperature measured at the time that the building air leakage test was performed.
4. Enter the outdoor temperature measured at the time that the building air leakage test was performed.
5. Provide a brief description of the location where the blower door was installed for the test. Examples: "front entry door on west side of house", "door between house and garage", "large window in family room".
6. Enter the building elevation use the value for the closest city found in Joint Appendix JA2.2. Only elevations higher than 5000 feet require an adjustment to the calculations.
7. This number is automatically pulled from the performance approach Certificate of Compliance. It is used to calculate air changes.
8. Enter the date that the building leakage test data was collected.

Section B. Diagnostic Equipment Information

1. Enter the number of blower door fan systems required to run simultaneously to pressurize the home for the building air leakage test. If more than one system is used, the fan flow numbers need to be manually added together, unless blower door software is used that will accommodate multiple fan systems running simultaneously.
2. Enter the appropriate information for each fan system used in the following rows.
3. Enter the make (brand) of the manometer used to collect the building air leakage data. Examples: Retrotec, Energy Conservatory.
4. Enter the model of the manometer used to collect the building air leakage data. Examples: DM-2 Mark II, DG700.
5. Enter the serial number of the manometer used to collect the building air leakage data.
6. Enter the most recent date that the manometer was calibrated by following manufacturer's calibration specifications.
7. This field is automatically filled. If the calibration date was more than 12 months prior to the test date entered in Row A.8, above, an error will appear.
8. Enter the make (brand) of the fan used to collect the building air leakage data. Examples: Retrotec, Energy Conservatory.
9. Enter the model of the fan used to collect the building air leakage data. Examples: US1000, Q46, BD3, BD4.
10. Enter the serial number of the fan used to collect the building air leakage data.

Section C. Envelope Leakage Test (ENV20c)

1. This test requires the use of an ASTM E779-10 compliant software. Enter the name and version of the software used to perform the calculations for the multi-point test. Note that the automatic baseline and @50 Pa functions should NOT be used for this test. Note that for QA purposes the inputs and test reports from the software may be requested by a HERS provider and should be kept for at least 5 years from date of test. Examples: FanTestic Pro v.5.0, TECTITE v.4.0
2. Enter the pre-test baseline building pressure reading. Note that the automatic baseline and @50 Pa functions should NOT be used for this test.
3. Enter the time average period used on the manometer during the test. Must be at least 10 seconds.
4. This field is automatically calculated when using the online form. The equation used to calculate this value in the field equals -60 + C.2 = Unadjusted Building Pressure Target. This number is for reference only to assist the user.
5. Enter the measured unadjusted building pressure straight from the manometer. It should be as close to the target from Row C.4 as possible. Note that the protocols require depressurization of the envelope. All blower door induced pressures are to be negative relative to outside. Note that the automatic baseline and @50 Pa functions should NOT be used for this test.
6. This field is automatically calculated when using the online form. The equation used to calculate this value in the field equals C.5 – C.2 = Induced Building Pressure.
7. The protocols in RA3.8.7.5 require that a minimum of eight total readings, equally spaced, be entered into the software. The lowest reading can be no smaller (absolute) than minus 4 Pa plus the baseline pressure reading.
8. Enter the pre-test baseline building pressure reading. Note that the automatic baseline and @50 Pa functions should NOT be used for this test.
9. Enter the CFM50 value reported back from the software based on the eight data points entered. Make sure that it is adjusted for temperature, altitude and accuracy by the software.

Section D. Altitude and Temperature Correction (Done by software)

Section E. Accuracy Adjustment

1. Enter the "percent uncertainty @ 95% confidence level" reported back from the software based on the eight data points entered.

For information and data collection only. Not valid until registered with a HERS provider

2. This field is automatically calculated when using the online form. The values entered the field E. 1 equals a. if row E. 1 ≥ 10.0, enter "Standard"; b. if row E. 1 > 10, enter "Reduced".
3. This field is automatically calculated when using the online form. The equation used to calculate this value in the field equals:
    a. If the accuracy level E.2 = Standard, then enter 1 as extending factor in box E. 3
    b. If the accuracy level E.2 = Reduced, extending factor equation equals 1+(% uncertainty/100)
4. This field is automatically calculated when using the online form. The equation used to calculate this value in the field equals the C.9 * E.3. = Adjusted CFM50 **Note -** This is the number that must be less than or equal to the target building air leakage from the CF-1R, shown in Row A.2.

For information and data collection only. Not valid until registered with a HERS provider

A. Building Air Leakage – General Information		
01	Test Procedure Used:	<<user input, pull down list: Single-Point Test with Manual Meter – Display MECH20-a below, adding lines C. 12-16; Single-Point Test with Automatic Meter – Display MECH20-b below, removing lines C. 12-16; Multi-Point Test – Display MECH20-c below; Repeated Single Point with Manual Meter – Display MECH20-d below; Repeated Single Point with Automatic Meter – Display MECH20-e below
02	Building Air Leakage Target from CF1R	<<number pulled from CF1R
03	Indoor temperature during test (degreeF)	<<user input, degF>>
04	Outdoor temperature during test (degreeF)	<<user input, degF>>
05	Blower door location	<<user input, text, maximum 50 characters>>
06	Building Elevation (ft)	<<user input, Ft>>
07	Building Volume (ft3)	<<pull from CF-1R>>
08	Date of the diagnostic test for this dwelling	<<user input: date (use date format validation control)>>

B. Diagnostic Equipment Information		
01	Number of Fans Used to Pressurize Home	<<user input, integer>> For entries >1, duplicate lines B. 2-6
02	Fan #1	<<repeat lines below for each fan>>
03	Manometer Make	<<user input, text, maximum 50 characters>>
04	Manometer Model	<<user input, text, maximum 50 characters>>
05	Manometer Serial Number	<<user input, text, maximum 50 characters>>
06	Manometer Calibration Date	<<user input, text, maximum 50 characters>>
07	Manometer Calibration Status	<<calculated field: if manometer Calibration Date in B. 6 is within 12 months of the date of the diagnostic test A. 8, then display message: Manometer Calibration is valid"; else display message: "WARNING - Manometer Calibration is expired. A manometer with current calibration is required in order to comply with this building Leakage Diagnostic test">>
08	Fan Make	<<user input, text, maximum 50 characters>>
09	Fan Model	<<user input, text, maximum 50 characters>>
10	Fan Serial Number	<<user input, text, maximum 50 characters>>

C. Envelope Leakage Diagnostic Test - ENV20c – Multi-Point Air Tightness Test - <<only used if this test is selected on row A. 1>>		
01	Name and version of ASTM E779-10 compliant software used for multi-point test.	<<user input, text, maximum 50 characters>>
02	Pre-test baseline building pressure	<<user input (Pa)>>
03	Time average period of meter	<<user entry but must be no less than 10 (seconds)>>
04	Unadjusted Building Pressure Target	<<calculated value, -60 + row C. 2>>
05	Unadjusted Building Pressure Measured	**<<**user entered value**>>**
06	Induced building pressure	<<calculated value, row C. 5 – row C. 2>>
07	A minimum of eight readings were taken spaced evenly between 15 Pa and 60 Pa (or highest attainable pressure).	<<user to acknowledge this requirement to continue>>
08	Post-test baseline building pressure	**<<**user input (Pa)**>>**
09	Corrected CFM50 (from software)	<<calculated by software >>

D. Altitude and Temperature Correction (not used, performed by blower door software)

E. Accuracy Adjustment		
01	Percent uncertainty @ 95% confidence level (from software)	<<calculated by software>>
02	Accuracy level	<<calculated, if row E. 1 ≤ 10, “Standard”; if row E. 1 > 10, “Reduced”>>
03	Extending factor	<<calculated, if row E. 2 is “Standard”=1; If it is “Reduced”, 1+ (% uncertainty/100)>>
04	Adjusted CFM50 (measured air leakage rate)	<<calculated, row C. 9 * row E. 3>>

For information and data collection only. Not valid until reviewed with a HERS provider.

F. Compliance Statement
<< if manometer Calibration Date in B. 6 is within 12 months of the date of the diagnostic test A. 8 and if Adjusted CFM50 Leakage in E. 4 is less than or equal to the Building Air Leakage Rate Target in A. 2 then display text: "Building Passes Envelope Leakage Test"; if manometer Calibration Date in B. 6 is more than 12 months from the date of the diagnostic test A. 8 or if Adjusted CFM50 Leakage in E. 4 is more than the Building Air Leakage Rate Target in A. 2 then display text: "Building Fails Envelope Leakage Test">>

G. Additional Requirements For Compliance	
The responsible persons signature on this document indicates that the following was completed before a blower-door test began:	
01	Open all interior doors and access including those to closets and those between a conditioned basement and attic.
02	HVAC Supply and return register dampers shall be fully open.
03	Temporarily sealing of combustion flues and intermittent exhaust fans are not allowed. Some examples are: combustion flues, fresh air intakes, dryer vents, bathroom and kitchen exhaust vents and fire place.
04	Continuously operated ventilation devices like energy recovery ventilators may be sealed.
05	Multifamily – Each dwelling unit must be tested individually and shown to meet the leakage requirements. Pressurization of the adjacent dwelling units while conducting this test is not allowed.

For information and data collection only. Not valid until registered with a HERS provider

BUILDING LEAKAGE DIAGNOSTIC TEST

CERTIFICATE OF INSTALLATION		CF3R-ENV-20-H
Building Leakage Diagnostic Test		(Page 1 of 3)
Project Name:	Enforcement Agency:	Permit Number:
Dwelling Address:	City	Zip Code

A. Building Air Leakage – General Information		
01	Test Procedure Used:	
02	Building Air Leakage Target from CF-1R	
03	Indoor temperature during test (degreeF)	
04	Outdoor temperature during test (degreeF)	
05	Blower door location	
06	Building Elevation (ft)	
07	Building Volume (ft3)	
08	Date of the diagnostic test for this dwelling	

B. Diagnostic Equipment Information		
01	Number of Fans Used to Pressurize Home	
02	Fan #1	
03	Manometer Make	
04	Manometer Model	
05	Manometer Serial Number	
06	Manometer Calibration Date	
07	Manometer Calibration Status	
08	Fan Make	
09	Fan Model	
10	Fan Serial Number	

C. Envelope Leakage Diagnostic Test - ENV20d – Repeated Single Point Air Tightness Test With Manual Meter		
01	Time average period of meter	
02	Pre-test baseline building pressure	
03	Blower Door Software used for calculations?	
04	Fan configuration	

05	06	07	08	09
Baseline Building Pressure Reading	Unadjusted building pressure	Nominal fan flow	Induced Building Pressure	Nominal CFM50

10	Average nominal CFM50	

D. Altitude and Temperature Correction		
<<if row C. 3 = “no”, use this section>>		
01	Altitude correction factor	<<calculated value, if row A. 6 ≤ 5000 Ft = 1; row A. 6 > 5000 =, 1 + .000006 * row A. 6
02	Temperature correction factor	
03	Corrected CFM50	

For information and data collection only. Not valid until registered with a HERS provider

CERTIFICATE OF INSTALLATION		CF3R-ENV-20-H
Building Leakage Diagnostic Test		(Page 2 of 3)
Project Name:	Enforcement Agency:	Permit Number:
Dwelling Address:	City	Zip Code

E. Accuracy Adjustment		
<<if row C. 3 = "no", use this section>>		
01	Standard deviation of nominal CFM 50 values above	
02	Percent uncertainty	
03	Accuracy level	
04	Extending factor	
05	Adjusted CFM50 (measured air leakage rate)	
<<if row C. 3 = "yes", use next two lines>>		
06	Corrected CFM50 (from software)	
07	Percent uncertainty @ 95% confidence level (from software)	

F. Compliance Statement
<< if manometer Calibration Date in B. 6 is within 12 months of the date of the diagnostic test A. 8 and if Adjusted CFM50 Leakage in E. 5 or E. 7 is less than or equal to the Building Air Leakage Rate Target in A. 2 then display text: "Building Passes Envelope Leakage Test"; if manometer Calibration Date in B. 6 is more than 12 months from the date of the diagnostic test A. 8 or if Adjusted CFM50 Leakage in E. 5 or E. 7 is more than the Building Air Leakage Rate Target in A. 2 then display text: "Building Fails Envelope Leakage Test">>

G. Additional Requirements For Compliance	
The responsible persons signature on this document indicates that the following was completed before a blower-door test began:	
01	Open all interior doors and access including those to closets and those between a conditioned basement and attic.
02	HVAC Supply and return register dampers shall be fully open.
03	Temporarily sealing of combustion flues and intermittent exhaust fans are not allowed. Some examples are: combustion flues, fresh air intakes, dryer vents, bathroom and kitchen exhaust vents and fire place.
04	Continuously operated ventilation devices like energy recovery ventilators may be sealed.
05	Multifamily – Each dwelling unit must be tested individually and shown to meet the leakage requirements. Pressurization of the adjacent dwelling units while conducting this test is not allowed.

For information only. Not valid until registration and with a HERS provider

CERTIFICATE OF INSTALLATION		CF3R-ENV-20-H
Building Leakage Diagnostic Test		(Page 3 of 3)
Project Name:	Enforcement Agency:	Permit Number:
Dwelling Address:	City	Zip Code

DOCUMENTATION AUTHOR'S DECLARATION STATEMENT

1. I certify that this Certificate of Installation documentation is accurate and complete.

Documentation Author Name:	Documentation Author Signature:
Documentation Author Company Name:	Date Signed:
Address:	CEA/HERS Certification Identification (If applicable):
City/State/Zip:	Phone:

RESPONSIBLE PERSON'S DECLARATION STATEMENT

I certify the following under penalty of perjury, under the laws of the State of California:

1. The information provided on this Certificate of Installation is true and correct.
2. I am eligible under Division 3 of the Business and Professions Code in the applicable classification to accept responsibility for the system design, construction, or installation of features, materials, components, or manufactured devices for the scope of work identified on this Certificate of Installation and attest to the declarations in this statement (responsible builder/installer), otherwise I am an authorized representative of the responsible builder/installer.
3. The constructed or installed features, materials, components or manufactured devices (the installation) identified on this Certificate of Installation conforms to all applicable codes and regulations, and the installation conforms to the requirements given on the plans and specifications approved by the enforcement agency.
4. I understand that a HERS rater will check the installation to verify compliance, and that if such checking identifies defects; I am required to take corrective action at my expense. I understand that Energy Commission and HERS Provider representatives will also perform quality assurance checking of installations, including those approved as part of a sample group but not checked by a HERS rater, and if those installations fail to meet the requirements of such quality assurance checking, the required corrective action and additional checking/testing of other installations in that HERS sample group will be performed at my expense.
5. I reviewed a copy of the Certificate of Compliance approved by the enforcement agency that identifies the specific requirements for the scope of construction or installation identified on this Certificate of Installation, and I have ensured that the requirements that apply to the construction or installation have been met.
6. I will ensure that a registered copy of this Certificate of Installation shall be posted, or made available with the building permit(s) issued for the building, and made available to the enforcement agency for all applicable inspections. I understand that a registered copy of this Certificate of Installation is required to be included with the documentation the builder provides to the building owner at occupancy.

Responsible Builder/Installer Name:	Responsible Builder/Installer Signature:	
Company Name: (Installing Subcontractor or General Contractor or Builder/Owner)	Position With Company (Title):	
Address:	CSLB License:	
City/State/Zip:	Phone	Date Signed:
Third Party Quality Control Program (TPQCP) Status:	Name of TPQCP (if applicable):	

For information and data collection only. Not valid until registered with a HERS provider

Instructions for ENV20d

Section A. Building Air Leakage – General Information

1. Select the appropriate test procedure. This selection will determine which version of this document will be used (a, b, c, d, or e) and therefore which data must be collected. Note that single-point tests can only be used under certain conditions. Note that newer manometers have automatic functions for compensating for baseline (automatic baseline) and compensating for house pressures other than the target (@50 Pa). It is preferable to use these, when available, however if these automatic functions are to be used, they must BOTH be used.
2. This number is automatically pulled from the performance approach Certificate of Compliance and is the target maximum that was entered by the documentation author. If this number cannot be achieved, the performance compliance calculations can be redone with a higher number or without the requirement for building air leakage.
3. Enter the indoor temperature measured at the time that the building air leakage test was performed.
4. Enter the outdoor temperature measured at the time that the building air leakage test was performed.
5. Provide a brief description of the location where the blower door was installed for the test. Examples: "front entry door on west side of house", "door between house and garage", "large window in family room".
6. Enter the building elevation use the value for the closest city found in Joint Appendix JA2.2. Only elevations higher than 5000 feet require an adjustment to the calculations.
7. This number is automatically pulled from the performance approach Certificate of Compliance. It is used to calculate air changes.
8. Enter the date that the building leakage test data was collected.

Section B. Diagnostic Equipment Information

1. Enter the number of blower door fan systems required to run simultaneously to pressurize the home for the building air leakage test. If more than one system is used, the fan flow numbers need to be manually added together, unless blower door software is used that will accommodate multiple fan systems running simultaneously.
2. Enter the appropriate information for each fan system used in the following rows.
3. Enter the make (brand) of the manometer used to collect the building air leakage data. Examples: Retrotec, Energy Conservatory.
4. Enter the model of the manometer used to collect the building air leakage data. Examples: DM-2 Mark II, DG700.
5. Enter the serial number of the manometer used to collect the building air leakage data.
6. Enter the most recent date that the manometer was calibrated by following manufacturer's calibration specifications.
7. This field is automatically filled. If the calibration date was more than 12 months prior to the test date entered in Row A.8, above, an error will appear.
8. Enter the make (brand) of the fan used to collect the building air leakage data. Examples: Retrotec, Energy Conservatory.
9. Enter the model of the fan used to collect the building air leakage data. Examples: US1000, Q46, BD3, BD4.
10. Enter the serial number of the fan used to collect the building air leakage data.

Section C. Envelope Leakage Test (specific to the ENV20d)

1. Enter the time average period used on the manometer during the test. Must be at least 10 seconds.
2. Enter the pre-test baseline building pressure reading.
3. If ASTM E779-10 compliant software is being used for the calculations, enter the name and version here. Otherwise, choose "none".
4. Enter the fan configuration (rings) used during the data acquisition. Examples: Ring A, Ring A1, Ring B2. Note: fan configuration must be the same for all data points described below)

Note: A minimum of five and a maximum of nine data points are required for items C.5, C.6, C.7, C.8, and C.9 below for this test.

5. Enter baseline building pressure readings
6. Enter the measured unadjusted building pressure straight from the manometer. Note that the protocols require depressurization of the envelope. All blower door induced pressures are to be negative relative to outside.
7. Enter the fan flow from the manometer that corresponds to the measured unadjusted building pressure from Row C.6.
8. This field is automatically calculated when using the online form. The equation used to calculate this value to calculate this value in the field equals Row C.6 – C.5 = Induced Building pressure.
9. This field is automatically calculated when using the online form. The equation used to calculate this value in the field equals [50/(Row C.8)]^[0.65 x C.8 = Nominal CFM50.
10. This field is automatically calculated when using the online form. The equation used to calculate this value in the field equals ($C.9_1$+$C.9_2$+ $C.9_3$+ $C.9_4$+ $C.9_5$+$C.9_6$+ $C.9_7$+ $C.9_8$+ $C.9_9$)/N or the number of tests = Average Nominal CFM50

Section D. Altitude and Temperature Correction

1. This field is automatically calculated when using the online form. The equation used to calculate this value in the field equals:
    a. If the elevation entered in Row A.6 ≤ 5,000 ft, then enter 1 as altitude correction in box D. 1
    b. If the elevation entered in Row A.6 > 5,000 ft, altitude correction equation equals 1 + (0.000006 * A.6)
2. Enter the temperature correction factor from Table RA3.8-2 or RA3.8-3 using the indoor and outdoor temperatures entered in Rows A.3 and A.4.

For information and data collection only. Not valid until registered with a HERS provider

Table RA3.8-2 ***Temperature Correction Factors for Depressurization Testing****- Calculated according to ASTM E779-10*

		Inside Temperature (F)								
		50	**55**	**60**	**65**	**70**	**75**	**80**	**85**	**90**
Outside Temp (F)	**-20**	1.062	1.072	1.081	1.090	1.099	1.108	1.117	1.127	1.136
	-15	1.056	1.066	1.075	1.084	1.093	1.102	1.111	1.120	1.129
	-10	1.051	1.060	1.069	1.078	1.087	1.096	1.105	1.114	1.123
	-5	1.045	1.054	1.063	1.072	1.081	1.090	1.099	1.108	1.117
	0	1.039	1.048	1.057	1.066	1.075	1.084	1.093	1.102	1.111
	5	1.033	1.042	1.051	1.060	1.069	1.078	1.087	1.096	1.105
	10	1.028	1.037	1.046	1.055	1.064	1.072	1.081	1.090	1.099
	15	1.023	1.031	1.040	1.049	1.058	1.067	1.076	1.084	1.093
	20	1.017	1.026	1.035	1.044	1.052	1.061	1.070	1.079	1.087
	25	1.012	1.021	1.029	1.038	1.047	1.056	1.064	1.073	1.082
	30	1.007	1.015	1.024	1.033	1.041	1.050	1.059	1.067	1.076
	35	1.002	1.010	1.019	1.028	1.036	1.045	1.054	1.062	1.071
	40	0.997	1.005	1.014	1.023	1.031	1.040	1.048	1.057	1.065
	45	0.992	1.000	1.009	1.017	1.026	1.035	1.043	1.051	1.060
	50	0.987	0.995	1.004	1.012	1.021	1.029	1.038	1.046	1.055
	55	0.982	0.990	0.999	1.008	1.016	1.024	1.033	1.041	1.050
	60	0.997	0.986	0.994	1.003	1.011	1.019	1.028	1.036	1.045
	65	0.973	0.981	0.989	0.998	1.006	1.015	1.023	1.031	1.040
	70	0.968	0.976	0.985	0.993	1.001	1.010	1.018	1.026	1.035
	75	0.963	0.972	0.980	0.988	0.997	1.005	1.013	1.022	1.030
	80	0.959	0.967	0.976	0.984	0.992	1.000	1.009	1.017	1.025
	85	0.955	0.963	0.971	0.979	0.988	0.996	1.004	1.012	1.020
	90	0.950	0.958	0.967	0.975	0.983	0.991	0.999	1.008	1.016
	95	0.946	0.954	0.962	0.970	0.979	0.987	0.995	1.003	1.011
	100	0.942	0.950	0.958	0.966	0.970	0.982	0.990	0.998	1.007
	105	0.938	0.946	0.954	0.962	0.970	0.978	0.986	0.994	1.002
	110	0.933	0.942	0.950	0.952	0.966	0.974	0.982	0.990	0.998

Table RA3.8-3 ***Temperature Correction Factors for Pressurization Testing****- Calculated according to ASTM E779-10*

		Inside Temperature (F)								
		50	**55**	**60**	**65**	**70**	**75**	**80**	**85**	**90**
Outside Temp (F)	**-20**	0.865	0.861	0.857	0.853	0.849	0.845	0.841	0.837	0.833
	-15	0.874	0.870	0.866	0.862	0.858	0.854	0.850	0.846	0.842
	-10	0.883	0.879	0.874	0.870	0.866	0.862	0.858	0.854	0.850
	-5	0.892	0.887	0.883	0.879	0.875	0.871	0.867	0.863	0.859
	0	0.900	0.896	0.892	0.887	0.883	0.879	0.875	0.871	0.867
	5	0.909	0.905	0.900	0.896	0.892	0.888	0.883	0.879	0.875
	10	0.918	0.913	0.909	0.905	0.900	0.896	0.892	0.888	0.884
	15	0.927	0.922	0.918	0.913	0.909	0.905	0.900	0.896	0.892
	20	0.935	0.931	0.926	0.922	09.17	0.913	0.909	0.905	0.900
	25	0.944	0.939	0.935	0.930	0.926	0.922	0.917	0.913	0.909
	30	0.952	0.948	0.943	0.939	0.934	0.930	0.926	0.921	0.917
	35	0.961	0.956	0.952	0.947	0.943	0.938	0.934	0.930	0.926
	40	0.970	0.965	0.960	0.956	0.951	0.947	0.942	0.938	0.934
	45	0.978	0.974	0.961	0.964	0.960	0.955	0.951	0.946	0.942
	50	0.987	0.982	0.977	0.973	0.968	0.963	0.959	0.955	0.950
	55	0.995	0.990	0.986	0.981	0.976	0.972	0.967	0.963	0.958
	60	1.004	0.999	0.994	0.998	0.985	0.980	0.976	0.971	0.967
	65	1.012	1.008	1.003	0.998	0.993	0.988	0.984	0.979	0.975
	70	1.021	1.016	1.011	1.006	1.001	0.997	0.992	0.988	0.983
	75	1.029	1.024	1.019	1.015	1.010	1.005	1.000	0.996	0.991
	80	1.038	1.033	1.028	1.023	1.018	1.013	1.009	1.004	0.999
	85	1.046	1.041	1.036	1.031	1.026	1.022	1.017	1.012	1.008
	90	1.055	1.050	1.045	1.040	1.035	1.030	1.025	1.020	1.016
	95	1.063	1.058	1.053	1.048	1.043	1.038	1.033	1.028	1.024
	100	1.072	1.066	1.061	1.056	1.051	1.046	1.041	1.037	1.032
	105	1.080	1.075	1.070	1.064	1.059	1.054	1.050	1.045	1.040
	110	1.088	1.083	1.078	1.073	1.068	1.063	1.058	1.053	1.048

3. This field is automatically calculated when using the online form. The equation used to calculate this value in the field equals the product of D.1 * D.2 * C.10.

For information only. Not valid for certification with a HERS Rater.

Section E. Accuracy Adjustment (If Row C.3 = No)

1. This field is automatically calculated when using the online form. It is the standard deviation of the nominal CFM50 values from Rows $C.9_1$ through $C.9_9$. The equation used to calculate this value in the field equals the square root of {[(C.10- $C.9_1$)^2+(C.10- $C.9_2$)^2+(C.10- $C.9_3$)^2+(C.10- $C.9_4$)^2+(C.10- $C.9_5$)^2+(C.10- $C.9_6$)^2+(C.10- $C.9_7$)^2+(C.10- $C.9_8$)^2+(C.10- $C.9_9$)^2]/N-1 or the number of tests minus one} = standard deviation of the nominal CFM50.
2. This field is automatically calculated when using the online form. It is the percent uncertainty and the equation used to calculate this value in the field equals {[(C.1/ square root N or the number of tests)x t-statistic look up from table RA 3.8-1]/D.3 corrected CFM50} = percent uncertainty

Table 3.8-1 Precision Uncertainty: *Values of t-statistic*

Number of Readings	t-statistic
5	2.78
6	2.57
7	2.45
8	2.37
9	2.31

3. This field is automatically calculated when using the online form. The equation used to calculate this value in the field equals:
   a. If the percent uncertainty in E.2 ≤ 10, then enter "standard" as accuracy level in box E. 3
   b. If the percent uncertainty in E.2 > 10, then enter "reduced" as accuracy level in box E. 3
4. This field is automatically calculated when using the online form. The equation used to calculate this value in the field equals:
   a. If the accuracy level E.3 = Standard, then enter 1 as extending factor in box E.4
   b. If the accuracy level E.3 = Reduced, extending factor equation equals 1+(E.2/100)
5. This field is automatically calculated when using the online form. The equation used to calculate this value in the field equals the D.3 * E.4 = Adjusted CFM50

Section E. Accuracy Adjustment (If Row C.3 = Yes)

6. Enter the corrected CFM50 from manometer software.
7. Enter the percent uncertainty from manometer software.

For information and data collection only. Not valid until registered with a HERS provider

A. Building Air Leakage – General Information		
01	Test Procedure Used:	<<user input, pull down list: Single-Point Test with Manual Meter – Display MECH20-a below, adding lines C. 12-16; Single-Point Test with Automatic Meter – Display MECH20-b below, removing lines C. 12-16; Multi-Point Test – Display MECH20-c below; Repeated Single Point with Manual Meter – Display MECH20-d below; Repeated Single Point with Automatic Meter – Display MECH20-e below
02	Building Air Leakage Target from CF-1R	<<number pulled from CF-1R
03	Indoor temperature during test (degreeF)	<<user input, degF>>
04	Outdoor temperature during test (degreeF)	<<user input, degF>>
05	Blower door location	<<user input, text, maximum 50 characters>>
06	Building Elevation (ft)	<<user input, Ft>>
07	Building Volume (ft3)	<<pull from CF-1R>>
08	Date of the diagnostic test for this dwelling	<<user input: date (use date format validation control)>>

B. Diagnostic Equipment Information		
01	Number of Fans Used to Pressurize Home	<<user input, integer>> For entries >1, duplicate lines B. 2-6
02	Fan #1	<<repeat lines below for each fan>>
03	Manometer Make	<<user input, text, maximum 50 characters>>
04	Manometer Model	<<user input, text, maximum 50 characters>>
05	Manometer Serial Number	<<user input, text, maximum 50 characters>>
06	Manometer Calibration Date	<<user input, text, maximum 50 characters>>
07	Manometer Calibration Status	<<calculated field: if manometer Calibration Date in B. 6 is within 12 months of the date of the diagnostic test a. 8, then display message: Manometer Calibration is valid"; else display message: "WARNING - Manometer Calibration is expired. A manometer with current calibration is required in order to comply with this building Leakage Diagnostic test">>
08	Fan Make	<<user input, text, maximum 50 characters>>
09	Fan Model	<<user input, text, maximum 50 characters>>
10	Fan Serial Number	<<user input, text, maximum 50 characters>>

For information and data collection only. Not valid until signed with a HERS provider

C. Envelope Leakage Diagnostic Test - ENV20d – Repeated Single Point Air Tightness Test With Manual Meter		
01	Time average period of meter	<<user entry but must be no less than 10, in second>>
02	Pre-test baseline building pressure	<<user input (Pa)>>
03	Blower Door Software used for calculations?	<<user entry, choices are "yes" or "no">
04	Fan configuration	<<user entry>> fan configuration must be the same for all data points

05	06	07	08	09
Baseline Building Pressure Reading	Unadjusted building pressure	Nominal fan flow	Induced Building Pressure	Nominal CFM50
< required data>	<required data>	< required data>	<<calculated field: = [C.6] - [C.5]>>	<<calculated field: = (50/[C.8])^0.65 x [C.8]>>
< required data>	<required data>	< required data>	<<calculated field: = [C.6] - [C.5]>>	<<calculated field: = (50/[C.8])^0.65 x [C.8]>>
< required data>	<required data>	< required data>	<<calculated field: = [C.6] - [C.5]>>	<<calculated field: = (50/[C.8])^0.65 x [C.8]>>
< required data>	<required data>	< required data>	<<calculated field: = [C.6] - [C.5]>>	<<calculated field: = (50/[C.8])^0.65 x [C.8]>>
< required data>	<required data>	< required data>	<<calculated field: = [C.6] - [C.5]>>	<<calculated field: = (50/[C.8])^0.65 x [C.8]>>
< optional data>	< optional data>	< optional data>	<<calculated field: = [C.6] - [C.5]>>	<<calculated field: = (50/[C.8])^0.65 x [C.8]>>
< optional data>	< optional data>	< optional data>	<<calculated field: = [C.6] - [C.5]>>	<<calculated field: = (50/[C.8])^0.65 x [C.8]>>
< optional data>	< optional data>	< optional data>	<<calculated field: = [C.6] - [C.5]>>	<<calculated field: = (50/[C.8])^0.65 x [C.8]>>
< optional data>	< optional data>	< optional data>	<<calculated field: = [C.6] - [C.5]>>	<<calculated field: = (50/[C.8])^0.65 x [C.8]>>

10	Average nominal CFM50	

D. Altitude and Temperature Correction		
<<if row C. 3 = "no", use this section>>		
01	Altitude correction factor	<<calculated value, if row A. 6 ≤ 5000 Ft = 1; row A. 6 > 5000 =, 1 + .000006 * row A. 6
02	Temperature correction factor	<<from tables RA3.8-2 and RA3.8-3>>
03	Corrected CFM50	<<calculated value, Row C. 11*altitude correction D. 1 * temperature correction D. 2>>

For information and data collection only. Not valid until registered with a HERS Provider

E. Accuracy Adjustment		
<<if row C. 3 = “no”, use this section>>		
01	Standard deviation of nominal CFM 50 values above	<<calculated>>
02	Percent uncertainty	<<calculated, {[std dev/sqrt(N)] * look up table RA 3.8-1}/corrected CFM50>>
03	Accuracy level	<<calculated, if % uncertainty ≤10, “Standard”; if % uncertainty > 10, “Reduced”>>
04	Extending factor	<<calculated, if row E. 3 is “Standard”=1; If it is “Reduced”, 1+ (% uncertainty/100)>>
05	Adjusted CFM50 (measured air leakage rate)	<<calculated, row D. 3 * row E. 4>>
<<if row C. 3 = “yes”, use next two lines>>		
06	Corrected CFM50 (from software)	<<calculated by software>>
07	Percent uncertainty @ 95% confidence level (from software)	<<calculated by software>>

F. Compliance Statement
<< if manometer Calibration Date in B. 6 is within 12 months of the date of the diagnostic test A. 8 and if Adjusted CFM50 Leakage in E. 5 or E. 7 is less than or equal to the Building Air Leakage Rate Target in A. 2 then display text: "Building Passes Envelope Leakage Test"; if manometer Calibration Date in B. 6 is more than 12 months from the date of the diagnostic test A. 8 or if Adjusted CFM50 Leakage in E. 5 or E. 7 is more than the Building Air Leakage Rate Target in A. 2 then display text: "Building Fails Envelope Leakage Test">>

G. Additional Requirements For Compliance	
The responsible persons signature on this document indicates that the following was completed before a blower-door test began:	
01	Open all interior doors and access including those to closets and those between a conditioned basement and attic.
02	HVAC Supply and return register dampers shall be fully open.
03	Temporarily sealing of combustion flues and intermittent exhaust fans are not allowed. Some examples are: combustion flues, fresh air intakes, dryer vents, bathroom and kitchen exhaust vents and fire place.
04	Continuously operated ventilation devices like energy recovery ventilators may be sealed.
05	Multifamily – Each dwelling unit must be tested individually and shown to meet the leakage requirements. Pressurization of the adjacent dwelling units while conducting this test is not allowed.

For information and data collection only. Not valid until registered with a HERS provider

BUILDING LEAKAGE DIAGNOSTIC TEST

CERTIFICATE OF VERIFICATION		CF3R-ENV-20-H
Building Leakage Diagnostic Test		(Page 1 of 3)
Project Name:	Enforcement Agency:	Permit Number:
Dwelling Address:	City	Zip Code

A. Building Air Leakage – General Information		
01	Test Procedure Used:	
02	Building Air Leakage Target from CF1R	
03	Indoor temperature during test (degreeF)	
04	Outdoor temperature during test (degreeF)	
05	Blower door location	
06	Building Elevation (ft)	
07	Building Volume (ft3)	
08	Date of the diagnostic test for this dwelling	

B. Diagnostic Equipment Information		
01	Number of Fans Used to Pressurize Home	
02	Fan #1	
03	Manometer Make	
04	Manometer Model	
05	Manometer Serial Number	
06	Manometer Calibration Date	
07	Manometer Calibration Status	
08	Fan Make	
09	Fan Model	
10	Fan Serial Number	

C. Envelope Leakage Diagnostic Test - ENV20e – Repeated Single Point Air Tightness Test With Automatic Meter										
01	Time average period of meter									
02	Pre-test baseline building pressure									
03	Blower Door Software used for calculations?									
04	Data Points =>	#1	#2	#3	#4	#5	#6	#7	#8	#9
05	(Min 5, max 9 data pts)									
06	Fan configuration*									
07	Induced building pressure									
08	Nominal CFM50									
09	Average nominal CFM50	<<calculated, average of nominal CFM50 values, above>>								

D. Altitude and Temperature Correction		
<<if row C. 3 = “no”, use this section>>		
01	Altitude correction factor	
02	Temperature correction factor	
03	Corrected CFM50	

For information and data collection only. Not valid until registered with a HERS provider

CERTIFICATE OF VERIFICATION		CF3R-ENV-20-H
Building Leakage Diagnostic Test		(Page 2 of 3)
Project Name:	Enforcement Agency:	Permit Number:
Dwelling Address:	City	Zip Code

E. Accuracy Adjustment		
<<if row C. 3 = “no”, use this section>>		
01	Standard deviation of nominal CFM 50 values above	
02	Percent uncertainty	
03	Accuracy level	
04	Extending factor	
05	Adjusted CFM50 (measured air leakage rate)	
<<if row C. 3 = “yes”, use next two lines>>		
06	Corrected CFM50 (from software)	
07	Percent uncertainty @ 95% confidence level (from software)	

F. Compliance Statement
<< if manometer Calibration Date in B. 6 is within 12 months of the date of the diagnostic test A. 8 and if Adjusted CFM50 Leakage in E. 8 is less than or equal to the Building Air Leakage Rate Target in A. 2 then display text: "Building Passes Envelope Leakage Test"; if manometer Calibration Date in B. 6 is more than 12 months from the date of the diagnostic test A. 8 or if Adjusted CFM50 Leakage in E. 8 is more than the Building Air Leakage Rate Target in A. 2 then display text: "Building Fails Envelope Leakage Test">>

G. Additional Requirements For Compliance	
The responsible persons signature on this document indicates that the following was completed before a blower-door test began:	
01	Open all interior doors and access including those to closets and those between a conditioned basement and attic.
02	HVAC Supply and return register dampers shall be fully open.
03	Temporarily sealing of combustion flues and intermittent exhaust fans are not allowed. Some examples are: combustion flues, fresh air intakes, dryer vents, bathroom and kitchen exhaust vents and fire place.
04	Continuously operated ventilation devices like energy recovery ventilators may be sealed.
05	Multifamily – Each dwelling unit must be tested individually and shown to meet the leakage requirements. Pressurization of the adjacent dwelling units while conducting this test is not allowed.

For informational data collection only. Not valid unless entered with a HERS provider

CERTIFICATE OF VERIFICATION		CF3R-ENV-20-H
Building Leakage Diagnostic Test		(Page 3 of 3)
Project Name:	Enforcement Agency:	Permit Number:
Dwelling Address:	City	Zip Code

DOCUMENTATION AUTHOR'S DECLARATION STATEMENT	
1. I certify that this Certificate of Verification documentation is accurate and complete.	
Documentation Author Name:	Documentation Author Signature:
Company:	Date Signed:
Address:	CEA/HERS Certification Information (if applicable):
City/State/Zip:	Phone:

RESPONSIBLE PERSON'S DECLARATION STATEMENT

I certify the following under penalty of perjury, under the laws of the State of California:

1. The information provided on this Certificate of Verification is true and correct.
2. I am the certified HERS Rater who performed the verification identified and reported on this Certificate of Verification (responsible rater).
3. The installed features, materials, components, manufactured devices, or system performance diagnostic results that require HERS verification identified on this Certificate of Verification comply with the applicable requirements in Reference Appendices RA2, RA3, and the requirements specified on the Certificate of Compliance for the building approved by the enforcement agency.
4. The information reported on applicable sections of the Certificate(s) of Installation (CF2R) signed and submitted by the person(s) responsible for the construction or installation conforms to the requirements specified on the Certificate(s) of Compliance (CF1R) approved by the enforcement agency.
5. I will ensure that a registered copy of this Certificate of Verification shall be posted, or made available with the building permit(s) issued for the building, and made available to the enforcement agency for all applicable inspections. I understand that a registered copy of this Certificate of Verification is required to be included with the documentation the builder provides to the building owner at occupancy.

BUILDER OR INSTALLER INFORMATION AS SHOWN ON THE CERTIFICATE OF INSTALLATION	
Company Name (Installing Subcontractor, General Contractor, or Builder/Owner):	
Responsible Builder or Installer Name:	CSLB License:
HERS PROVIDER DATA REGISTRY INFORMATION	
Sample Group Number (if applicable):	Dwelling Test Status in Sample Group (if applicable)
HERS RATER INFORMATION	
HERS Rater Company Name:	
Responsible Rater Name:	Responsible Rater Signature:
Responsible Rater Certification Number w/ this HERS Provider	Date Signed:

For information and data collection only. Not valid until registered with a HERS provider

Instructions for ENV20e

Section A. Building Air Leakage – General Information

1. Select the appropriate test procedure. This selection will determine which version of this document will be used (a, b, c, d, or e) and therefore which data must be collected. Note that single-point tests can only be used under certain conditions. Note that newer manometers have automatic functions for compensating for baseline (automatic baseline) and compensating for house pressures other than the target (@50 Pa). It is preferable to use these, when available, however if these automatic functions are to be used, they must BOTH be used.
2. This number is automatically pulled from the performance approach Certificate of Compliance and is the target maximum that was entered by the documentation author. If this number cannot be achieved, the performance compliance calculations can be redone with a higher number or without the requirement for building air leakage.
3. Enter the indoor temperature measured at the time that the building air leakage test was performed.
4. Enter the outdoor temperature measured at the time that the building air leakage test was performed.
5. Provide a brief description of the location where the blower door was installed for the test. Examples: "front entry door on west side of house", "door between house and garage", "large window in family room".
6. Enter the building elevation use the value for the closest city found in Joint Appendix JA2.2. Only elevations higher than 5000 feet require an adjustment to the calculations.
7. This number is automatically pulled from the performance approach Certificate of Compliance. It is used to calculate air changes.
8. Enter the date that the building leakage test data was collected.

Section B. Diagnostic Equipment Information

1. Enter the number of blower door fan systems required to run simultaneously to pressurize the home for the building air leakage test. If more than one system is used, the fan flow numbers need to be manually added together, unless blower door software is used that will accommodate multiple fan systems running simultaneously.
2. Enter the appropriate information for each fan system used in the following rows.
3. Enter the make (brand) of the manometer used to collect the building air leakage data. Examples: Retrotec, Energy Conservatory.
4. Enter the model of the manometer used to collect the building air leakage data. Examples: DM-2 Mark II, DG700.
5. Enter the serial number of the manometer used to collect the building air leakage data.
6. Enter the most recent date that the manometer was calibrated by following manufacturer's calibration specifications.
7. This field is automatically filled. If the calibration date was more than 12 months prior to the test date entered in Row A.8, above, an error will appear.
8. Enter the make (brand) of the fan used to collect the building air leakage data. Examples: Retrotec, Energy Conservatory.
9. Enter the model of the fan used to collect the building air leakage data. Examples: US1000, Q46, BD3, BD4.
10. Enter the serial number of the fan used to collect the building air leakage data.

Section C. Envelope Leakage Test (specific to the ENV20e)

1. Enter the time average period used on the manometer during the test. Must be at least 10 seconds.
2. Enter the pre-test baseline building pressure reading.
3. If ASTM E779-10 compliant software is being used for the calculations, enter the name and version here. Otherwise, choose "none".
4. These are the numbered columns for the data points required for the test. There is a minimum of five and a maximum of nine data points required for this test.
5. This shows which data points are required or optional for this test. There is a minimum of five and a maximum of nine data points required for this test.
6. Enter the fan configuration (rings) that was used during the data acquisition. Examples: Ring A, Ring A1, Ring B2
7. Enter the induced building pressure from the manometer (automatic baseline feature turned on). It should be close to 50 Pa, but no less than 15 Pa.
8. Enter the Nominal CFM50 from the manometer (@50 Pa feature turned on).
9. This field is automatically calculated when using the online form. The equation used to calculate this value in the field equals ($C.8_1$+$C.8_2$+ $C.8_3$+ $C.8_4$+ $C.8_5$+$C.8_6$+ $C.8_7$+ $C.8_8$+ $C.8_9$)/N or the number of tests = Average Nominal CFM50

Section D. Altitude and Temperature Correction

1. This field is automatically calculated when using the online form. The equation used to calculate this value in the field equals:

For information and data collection only. Not valid until registered with a HERS Provider

a. If the elevation entered in Row A.6 ≤ 5,000 ft, then enter 1 as altitude correction in box D. 1
b. If the elevation entered in Row A.6 > 5,000 ft, altitude correction equation equals 1 + (0.000006 * A.6)

2. Enter the temperature correction factor from Table RA3.8-2 or RA3.8-3 using the indoor and outdoor temperatures entered in Rows A.3 and A.4.

Table RA3.8-2 ***Temperature Correction Factors for Depressurization Testing****- Calculated according to ASTM E779-10*

		Inside Temperature (F)								
		50	**55**	**60**	**65**	**70**	**75**	**80**	**85**	**90**
Outside Temp (F)	**-20**	1.062	1.072	1.081	1.090	1.099	1.108	1.117	1.127	1.136
	-15	1.056	1.066	1.075	1.084	1.093	1.102	1.111	1.120	1.129
	-10	1.051	1.060	1.069	1.078	1.087	1.096	1.105	1.114	1.123
	-5	1.045	1.054	1.063	1.072	1.081	1.090	1.099	1.108	1.117
	0	1.039	1.048	1.057	1.066	1.075	1.084	1.093	1.102	1.111
	5	1.033	1.042	1.051	1.060	1.069	1.078	1.087	1.096	1.105
	10	1.028	1.037	1.046	1.055	1.064	1.072	1.081	1.090	1.099
	15	1.023	1.031	1.040	1.049	1.058	1.067	1.076	1.084	1.093
	20	1.017	1.026	1.035	1.044	1.052	1.061	1.070	1.079	1.087
	25	1.012	1.021	1.029	1.038	1.047	1.056	1.064	1.073	1.082
	30	1.007	1.015	1.024	1.033	1.041	1.050	1.059	1.067	1.076
	35	1.002	1.010	1.019	1.028	1.036	1.045	1.054	1.062	1.071
	40	0.997	1.005	1.014	1.023	1.031	1.040	1.048	1.057	1.065
	45	0.992	1.000	1.009	1.017	1.026	1.035	1.043	1.051	1.060
	50	0.987	0.995	1.004	1.012	1.021	1.029	1.038	1.046	1.055
	55	0.982	0.990	0.999	1.008	1.016	1.024	1.033	1.041	1.050
	60	0.997	0.986	0.994	1.003	1.011	1.019	1.028	1.036	1.045
	65	0.973	0.981	0.989	0.998	1.006	1.015	1.023	1.031	1.040
	70	0.968	0.976	0.985	0.993	1.001	1.010	1.018	1.026	1.035
	75	0.963	0.972	0.980	0.988	0.997	1.005	1.013	1.022	1.030
	80	0.959	0.967	0.976	0.984	0.992	1.000	1.009	1.017	1.025
	85	0.955	0.963	0.971	0.979	0.988	0.996	1.004	1.012	1.020
	90	0.950	0.958	0.967	0.975	0.983	0.991	0.999	1.008	1.016
	95	0.946	0.954	0.962	0.970	0.979	0.987	0.995	1.003	1.011
	100	0.942	0.950	0.958	0.966	0.970	0.982	0.990	0.998	1.007
	105	0.938	0.946	0.954	0.962	0.970	0.978	0.986	0.994	1.002
	110	0.933	0.942	0.950	0.952	0.966	0.974	0.982	0.990	0.998

Table RA3.8-3 ***Temperature Correction Factors for Pressurization Testing****- Calculated according to ASTM E779-10*

		Inside Temperature (F)								
		50	**55**	**60**	**65**	**70**	**75**	**80**	**85**	**90**
Outside Temp (F)	**-20**	0.865	0.861	0.857	0.853	0.849	0.845	0.841	0.837	0.833
	-15	0.874	0.870	0.866	0.862	0.858	0.854	0.850	0.846	0.842
	-10	0.883	0.879	0.874	0.870	0.866	0.862	0.858	0.854	0.850
	-5	0.892	0.887	0.883	0.879	0.875	0.871	0.867	0.863	0.859
	0	0.900	0.896	0.892	0.887	0.883	0.879	0.875	0.871	0.867
	5	0.909	0.905	0.900	0.896	0.892	0.888	0.883	0.879	0.875
	10	0.918	0.913	0.909	0.905	0.900	0.896	0.892	0.888	0.884
	15	0.927	0.922	0.918	0.913	0.909	0.905	0.900	0.896	0.892
	20	0.935	0.931	0.926	0.922	09.17	0.913	0.909	0.905	0.900
	25	0.944	0.939	0.935	0.930	0.926	0.922	0.917	0.913	0.909
	30	0.952	0.948	0.943	0.939	0.934	0.930	0.926	0.921	0.917
	35	0.961	0.956	0.952	0.947	0.943	0.938	0.934	0.930	0.926
	40	0.970	0.965	0.960	0.956	0.951	0.947	0.942	0.938	0.934
	45	0.978	0.974	0.961	0.964	0.960	0.955	0.951	0.946	0.942
	50	0.987	0.982	0.977	0.973	0.968	0.963	0.959	0.955	0.950
	55	0.995	0.990	0.986	0.981	0.976	0.972	0.967	0.963	0.958
	60	1.004	0.999	0.994	0.998	0.985	0.980	0.976	0.971	0.967
	65	1.012	1.008	1.003	0.998	0.993	0.988	0.984	0.979	0.975
	70	1.021	1.016	1.011	1.006	1.001	0.997	0.992	0.988	0.983
	75	1.029	1.024	1.019	1.015	1.010	1.005	1.000	0.996	0.991
	80	1.038	1.033	1.028	1.023	1.018	1.013	1.009	1.004	0.999
	85	1.046	1.041	1.036	1.031	1.026	1.022	1.017	1.012	1.008
	90	1.055	1.050	1.045	1.040	1.035	1.030	1.025	1.020	1.016
	95	1.063	1.058	1.053	1.048	1.043	1.038	1.033	1.028	1.024
	100	1.072	1.066	1.061	1.056	1.051	1.046	1.041	1.037	1.032
	105	1.080	1.075	1.070	1.064	1.059	1.054	1.050	1.045	1.040
	110	1.088	1.083	1.078	1.073	1.068	1.063	1.058	1.053	1.048

3. This field is automatically calculated when using the online form. The equation used to calculate this value in the field equals the product of D.1 * D.2 * C.9.

For information only. Not valid until approved with a

Section E. Accuracy Adjustment (If Row C.3 = No)

1. This field is automatically calculated when using the online form. It is the standard deviation of the nominal CFM50 values from Rows $C.9_1$ through $C.9_9$. The equation used to calculate this value in the field equals the square root of {[(C.10- $C.9_1$)^2+(C.10- $C.9_2$)^2+(C.10- $C.9_3$)^2+(C.10- $C.9_4$)^2+(C.10- $C.9_5$)^2+(C.10- $C.9_6$)^2+(C.10- $C.9_7$)^2+(C.10- $C.9_8$)^2+(C.10- $C.9_9$)^2]/N-1 or the number of tests minus one} = standard deviation of the nominal CFM50.
2. This field is automatically calculated when using the online form. It is the percent uncertainty and the equation used to calculate this value in the field equals {[(C.1/ square root N or the number of tests)x t-statistic look up from table RA 3.8-1]/D.3 corrected CFM50} = percent uncertainty

Table 3.8-1 Precision Uncertainty: *Values of t-statistic*

Number of Readings	t-statistic
5	2.78
6	2.57
7	2.45
8	2.37
9	2.31

3. This field is automatically calculated when using the online form. The equation used to calculate this value in the field equals:
   a. If the percent uncertainty in E.2 ≤ 10, then enter "standard" as accuracy level in box E. 3
   b. If the percent uncertainty in E.2 > 10, then enter "reduced" as accuracy level in box E. 3
4. This field is automatically calculated when using the online form. The equation used to calculate this value in the field equals:
   a. If the accuracy level E.3 = Standard, then enter 1 as extending factor in box E.4
   b. If the accuracy level E.3 = Reduced, extending factor equation equals 1+(E.2/100)
5. This field is automatically calculated when using the online form. The equation used to calculate this value in the field equals the D.3 * E.4 = Adjusted CFM50

Section E. Accuracy Adjustment (If Row C.3 = Yes)

6. Enter the corrected CFM50 from manometer software.
7. Enter the percent uncertainty from manometer software.

For information and data collection only. Not valid until registered with a HERS provider

A. Building Air Leakage – General Information		
01	Test Procedure Used:	<<user input, pull down list: Single-Point Test with Manual Meter – Display MECH20-a below, adding lines C. 12-16; Single-Point Test with Automatic Meter – Display MECH20-b below, removing lines C. 12-16; Multi-Point Test – Display MECH20-c below; Repeated Single Point with Manual Meter – Display MECH20-d below; Repeated Single Point with Automatic Meter – Display MECH20-e below
02	Building Air Leakage Target from CF1R	<<number pulled from CF1R
03	Indoor temperature during test (degreeF)	<<user input, degF>>
04	Outdoor temperature during test (degreeF)	<<user input, degF>>
05	Blower door location	<<user input, text, maximum 50 characters>>
06	Building Elevation (ft)	<<user input, Ft>>
07	Building Volume (ft3)	<<pull from CF-1R>>
08	Date of the diagnostic test for this dwelling	<<user input: date (use date format validation control)>>

B. Diagnostic Equipment Information		
01	Number of Fans Used to Pressurize Home	<<user input, integer>> For entries >1, duplicate lines B. 2-6
02	Fan #1	<<repeat lines below for each fan>>
03	Manometer Make	<<user input, text, maximum 50 characters>>
04	Manometer Model	<<user input, text, maximum 50 characters>>
05	Manometer Serial Number	<<user input, text, maximum 50 characters>>
06	Manometer Calibration Date	<<user input, text, maximum 50 characters>>
07	Manometer Calibration Status	<<calculated field: if manometer Calibration Date in B. 6 is within 12 months of the date of the diagnostic test a. 8, then display message: Manometer Calibration is valid"; else display message: "WARNING - Manometer Calibration is expired. A manometer with current calibration is required in order to comply with this building Leakage Diagnostic test">>
08	Fan Make	<<user input, text, maximum 50 characters>>
09	Fan Model	<<user input, text, maximum 50 characters>>
10	Fan Serial Number	<<user input, text, maximum 50 characters>>

C. Envelope Leakage Diagnostic Test - ENV20e – Repeated Single Point Air Tightness Test With Automatic Meter - <<only used if this test is selected on row A. 1>>

01	Time average period of meter	<<user entry but must be no less than 10, in second>>
02	Pre-test baseline building pressure	<<user input (Pa)>>
03	Blower Door Software used for calculations?	<<user entry, choices are "yes" or "no">

04	Data Points =>	#1	#2	#3	#4	#5	#6	#7	#8	#9
05	(Min 5, max 9 data pts)	required	required	required	required	required	Optional, may be left blank	Optional, may be left blank	Optional, may be left blank	Optional, may be left blank
06	Fan configuration*	<user entry>	same	same	same	same	same	same	same	same
07	Induced building pressure	<user entry>	same	same	same	same	same	same	same	same
08	Nominal CFM50	<user entry>	same	same	same	same	same	same	same	same
09	Average nominal CFM50				<<calculated, average of nominal CFM50 values, above>>					

D. Altitude and Temperature Correction		
<<if row C. 3 = "no", use this section>>		
01	Altitude correction factor	<<calculated value, if row A. 6 ≤ 5000 Ft = 1; row A. 6 > 5000 =, 1 + .000006 * row A. 6
02	Temperature correction factor	<<from tables RA3.8-2 and RA3.8-3, possible look up? showing both input and output for user to double check>>
03	Corrected CFM50	<<calculated value, Row C. 9*altitude correction D. 1 * temperature correction D. 2>>

For information and data collection only. Not valid until approved with a HERS provider

E. Accuracy Adjustment		
<<if row C. 3 = "no", use this section>>		
01	Standard deviation of nominal CFM 50 values above	<<calculated>>
02	Percent uncertainty	<<calculated, {[std dev/sqrt(N)] * look up table RA 3.8-1}/corrected CFM50>>
03	Accuracy level	<<calculated, if % uncertainty ≤10, "Standard"; if % uncertainty > 10, "Reduced">>
04	Extending factor	<<calculated, if row E. 3 is "Standard"=1; If it is "Reduced", 1+ (% uncertainty/100)>>
05	Adjusted CFM50 (measured air leakage rate)	<<calculated, row D. 3 * row E. 4>>
<<if row C. 3 = "yes", use next two lines>>		
06	Corrected CFM50 (from software)	<<calculated by software>>
07	Percent uncertainty @ 95% confidence level (from software)	<<calculated by software>>

F. Compliance Statement
<< if manometer Calibration Date in B. 6 is within 12 months of the date of the diagnostic test A. 8 and if Adjusted CFM50 Leakage in E. 8 is less than or equal to the Building Air Leakage Rate Target in A. 2 then display text: "Building Passes Envelope Leakage Test"; if manometer Calibration Date in B. 6 is more than 12 months from the date of the diagnostic test A. 8 or if Adjusted CFM50 Leakage in E. 8 is more than the Building Air Leakage Rate Target in A. 2 then display text: "Building Fails Envelope Leakage Test">>

G. Additional Requirements For Compliance	
The responsible persons signature on this document indicates that the following was completed before a blower-door test began:	
01	Open all interior doors and access including those to closets and those between a conditioned basement and attic.
02	HVAC Supply and return register dampers shall be fully open.
03	Temporarily sealing of combustion flues and intermittent exhaust fans are not allowed. Some examples are: combustion flues, fresh air intakes, dryer vents, bathroom and kitchen exhaust vents and fire place.
04	Continuously operated ventilation devices like energy recovery ventilators may be sealed.
05	Multifamily – Each dwelling unit must be tested individually and shown to meet the leakage requirements. Pressurization of the adjacent dwelling units while conducting this test is not allowed.

For information and data collection only. Not valid until signed with a HERS provider

AIR INFILTRATION SEALING – FRAMING STAGE FOR BATT, LOOSE FILL, AND SPF

CERTIFICATE OF VERIFICATION		CF3R-ENV-21-H
Quality Insulation Installation (QII) –Air Infiltration Sealing - Framing Stage for Batt, Loose Fill, and SPF		(Page 1 of 4)
Project Name:	Enforcement Agency:	Permit Number:
Dwelling Address:	City	Zip Code

A.	AIR INFULTRATION AND INSULATION INSTALLATION (QII) - FRAMING STAGE
01	The requirements below cover the required air sealing and installation of insulation that must occur in the framing stage.
02	Spray Foam Insulation (SPF) can be considered an air barrier when SPF covers the possible leakage area to a thickness of 5.5 inches for open cell SPF (ocSPF) and 2.0 inches for closed cell SPF (ccSPF).
The responsible person's signature on this document indicates that the air sealing requirements above meets the installation criteria specified in Table A – AIR INFULTRATION AND INSULATION INSTALLATION (QII) - FRAMING STAGE.	

B.	RAISED FLOOR
01	All gaps in the raised floor are sealed.
02	All chases sealed at floor level using a hard cover and the hard covers are sealed.
03	All Plumbing and electrical wires that penetrate the floor are sealed.
04	Subfloor sheathing is glued or sealed at all exterior panel edges, to create a continuous air tight subfloor.
The responsible person's signature on this document indicates that the air sealing requirements above meets the installation criteria specified in Table B – RAISED FLOOR.	

C.	WALLS/KNEE WALLS
01	All penetrations through the exterior wall air barrier are sealed to provide an air-tight envelope to unconditioned spaces such as the outdoors, attic, garage and crawl space.
02	Exterior wall air barrier is sealed to the top plate and bottom plate in each stud bay.
03	All electrical boxes including knockouts that penetrate the air barrier to unconditioned space are sealed.
04	All openings in top and bottom plate, including all interior and exterior walls, to unconditioned space are sealed. Such as holes drilled for electrical and plumbing.
05	Exterior bottom plates (all stories) are sealed to the floor using the appropriate sealing method under the entire exterior bottom plate of the home.
06	All gaps around windows and doors are sealed. Proper sealant used was specified by window manufacturer.
07	Rim Joists all gaps/openings fully sealed.
08	Fan exhaust ducts that run between conditioned floors to exterior walls have a damper at the exterior wall.
09	Metal tie downs are insulated between exterior framing and tie down.
10	Insulation is installed in hard to access wall stud cavities, such as corner channels, wall intersections are insulated to the proper R-value prior to exterior sheathing, or the exterior stucco lath.
10	Insulation is installed behind tub, shower, fireplace enclosures, and exterior stairwells to the R-value listed on the CF1R when located against exterior walls. Insulation is required to be installed before tub, shower, and fireplace are installed.
11	A solid air barrier is installed on the interior wall from floor to ceiling before tub, shower, and fireplace enclosures are installed in exterior walls. Insulation in contact on all six sides of air barrier on exterior walls.
12	All window and door headers shall be insulated to a minimum of R-2 between the exterior face of the header and inside surface of the finish wall material.
13	Knee walls have solid and sealed blocking at the bottom, top, left side and right side of the knee wall.
The responsible person's signature on this document indicates that the air sealing requirements above meets the installation criteria specified in Table C – WALLS/KNEE WALLS.	

D.	CEILING/ATTIC
01	For vented attics much of the ceiling air barrier is verified after the ceiling drywall is installed using the ENV-22.
02	For non-vented attics ensure all penetrations through the roof deck and gable ends are sealed and air tight.
03	All eave vents are covered with a rigid ventilation baffle that maintains the Net free-ventilation area.
04	All dropped ceilings/soffits are covered with hard covers and sealed to framing.
05	All chases are covered with hard covers and sealed to framing.
06	HVAC ducts that travel down a chase the chase is sealed at the ceiling level.
07	Chimney's and Flue's require sheet metal flashing. The flashing shall be sealed to the chimney/flue with fire rated caulk. The flashing shall be sealed to the surrounding framing.
08	All Eave/soffit baffles are installed to stop air movement around the baffle and into insulation. Net free-ventilation of the eave/soffit shall be maintained.
09	Double walls that open to attic are covered with an air barrier and cover has an air tight seal to the framing.
The responsible person's signature on this document indicates that the air sealing requirements above meets the installation criteria specified in Table D – CEILING/ATTIC.	

For information and data collection only. Not valid until registered with a HERS provider

CERTIFICATE OF VERIFICATION		CF3R-ENV-21-H
Quality Insulation Installation (QII) –Air Infiltration Sealing - Framing Stage for Batt, Loose Fill, and SPF		(Page 2 of 4)
Project Name:	Enforcement Agency:	Permit Number:
Dwelling Address:	City	Zip Code

E. CONDITIONED SPACE ABOVE OR ADJACENT TO GARAGE AIR BARRIER		
01	All penetration in the subfloor above the garage into conditioned space must follow the raised floor air barrier requirements above.	
02	The builder needs to ensure infiltration does not enter the house between the space above the garage and subfloor. Select the option used below:	
03	[Yes or No]	(a) Edges are Sealed at the garage ceiling (typical drywall) at the perimeter of the garage to create a continuous air tight surface between the garage and adjacent conditioned envelope. Seal all plumbing, electric and mechanical penetrations between the garage and the adjacent conditioned space. For an open-web truss, airtight blocking is added on four sides of the garage perimeter. Insulation can be placed on the garage ceiling.
04	[Yes or No]	(b) Seal band joist above the wall at the garage to conditioned space transition. Seal all subfloor seams and penetrations between the conditioned space and the garage. Insulation must be placed in contact of subfloor below conditioned space.
The responsible person's signature on this document indicates that the air sealing requirements above meets the installation criteria specified in Table E – CONDITIONED SPACE ABOVE OR ADJACENT TO GARAGE AIR BARRIER.		

F. WALLS FOR ATTACHED PORCH, ATTIC, DOUBLE WALL	
01	All walls that separate conditioned and unconditioned space includes a continuous air barrier on the interior and exterior wall.
02	Exterior wall, air barrier required at the intersection of the porch and exterior wall when there is conditioned space on the other side. The exterior wall where the attic attaches to the conditioned space does includes an air barrier.
03	Truss framing blocking is used at the top and bottom of each wall/roof section.
The responsible person's signature on this document indicates that the air sealing requirements above meets the installation criteria specified in Table F – WALLS FOR ATTACHED PORCH, ATTIC, DOUBLE WALL.	

G. CANTILEVERED FLOOR AIR BARRIER	
01	Airtight blocking is installed between joists where the wall rim joist would have been located in the absence of a cantilever.
02	Exterior sheathing is installed to the bottom of the cantilever so that there is a continuous air and weather barrier for the cantilever. The cantilevered joist must be insulated to the same R value as would be required for the subfloor prior to closing.
03	Any gaps, cracks or penetrations in the air barrier of the cantilever are sealed. Can lights in the cantilever are IC and AT rated and properly sealed to sheathing.
The responsible person's signature on this document indicates that the air sealing requirements above meets the installation criteria specified in Table F – CANTILEVERED FLOOR AIR BARRIER.	

G. MULTIFAMILY AIR BARRIER	
01	Multifamily buildings must meet all air sealing requirements for single family buildings listed above.
02	Each dwelling unit must be air sealed to stop air movement from one unit to another.
03	Floor AND Ceiling of each Dwelling Unit: All penetrations through the floor and ceiling of each unit are sealed including, electric and gas utilities, water pipes, drain pipes, fire protection service pipes, communication wiring.
04	Elevator penthouse, mechanical penthouse, stairwell doors, roof access hatch, plumbing stacks sealed to reduce air transfer from attached spaces.
05	Common Walls: Bottom plate between units is sealed to the subfloor. All penetrations in the common walls are sealed including electrical boxes, wiring and plumbing penetrations. Perpendicular Interior walls that open into the common walls are sealed.
06	Vertical Chases for garbage chutes, elevator shafts, and HVAC ducting plumbing must be sealed to the floor and ceiling of each unit to stop air movement up and around the chase due to stack effect.
07	Vertical Chases for garbage chutes, elevator shafts, and HVAC ducting plumbing, wiring etc. must be sealed to stop air movement through the chase to the surrounding spaces.
08	Common Hallways must be sealed to stop air movement into dwelling units.
The responsible person's signature on this document indicates that the air sealing requirements above meets the installation criteria specified in Table G – MULTIFAMILY AIR BARRIER.	

For information and data collection only. Not valid until registered with a HERS provider

CERTIFICATE OF VERIFICATION		CF3R-ENV-21-H
Quality Insulation Installation (QII) –Air Infiltration Sealing - Framing Stage for Batt, Loose Fill, and SPF		(Page 3 of 4)
Project Name:	Enforcement Agency:	Permit Number:
Dwelling Address:	City	Zip Code

DOCUMENTATION AUTHOR'S DECLARATION STATEMENT	
1. I certify that this Certificate of Verification documentation is accurate and complete.	
Documentation Author Name:	Documentation Author Signature:
Company:	Date Signed:
Address:	CEA/HERS Certification Information (if applicable):
City/State/Zip:	Phone:

RESPONSIBLE PERSON'S DECLARATION STATEMENT

I certify the following under penalty of perjury, under the laws of the State of California:

1. The information provided on this Certificate of Verification is true and correct.
2. I am the certified HERS Rater who performed the verification identified and reported on this Certificate of Verification (responsible rater).
3. The installed features, materials, components, manufactured devices, or system performance diagnostic results that require HERS verification identified on this Certificate of Verification comply with the applicable requirements in Reference Appendices RA2, RA3, and the requirements specified on the Certificate of Compliance for the building approved by the enforcement agency.
4. The information reported on applicable sections of the Certificate(s) of Installation (CF2R) signed and submitted by the person(s) responsible for the construction or installation conforms to the requirements specified on the Certificate(s) of Compliance (CF1R) approved by the enforcement agency.
5. I will ensure that a registered copy of this Certificate of Verification shall be posted, or made available with the building permit(s) issued for the building, and made available to the enforcement agency for all applicable inspections. I understand that a registered copy of this Certificate of Verification is required to be included with the documentation the builder provides to the building owner at occupancy.

BUILDER OR INSTALLER INFORMATION AS SHOWN ON THE CERTIFICATE OF INSTALLATION	
Company Name (Installing Subcontractor, General Contractor, or Builder/Owner):	
Responsible Builder or Installer Name:	CSLB License:
HERS PROVIDER DATA REGISTRY INFORMATION	
Sample Group Number (if applicable):	Dwelling Test Status in Sample Group (if applicable)
HERS RATER INFORMATION	
HERS Rater Company Name:	
Responsible Rater Name:	Responsible Rater Signature:
Responsible Rater Certification Number w/ this HERS Provider	Date Signed:

For information and data collection only. Not valid until registered with a HERS provider

CERTIFICATE OF VERIFICATION		CF3R-ENV-21-H
Quality Insulation Installation (QII) –Air Infiltration Sealing - Framing Stage for Batt, Loose Fill, and SPF		(Page 4 of 4)
Project Name:	Enforcement Agency:	Permit Number:
Dwelling Address:	City	Zip Code

For information and data collection only. Not valid until registered with a HERS provider

AIR INFILTRATION SEALING – FRAMING STAGE FOR BATT, LOOSE FILL, AND SPF

CERTIFICATE OF VERIFICATION		CF3R-ENV-21-H
Quality Insulation Installation (QII) – Air Infiltration Sealing - Framing Stage for SIP and ICF		(Page 1 of 3)
Project Name:	Enforcement Agency:	Permit Number:
Dwelling Address:	City	Zip Code

If there are any traditional stick built exterior walls use the CF3R-ENV-21. For traditional stick built roof/ceiling use the CF3R-ENV-22 and 23.

A. INSTALLATION	
01	The R-value of all SIP/ICF products is the same or better than listed on the CF1R.
02	If modeled on the CF-1R the density of the installed product is the same as installed.
03	SIP/ICF products have been installed per manufacturer installation instructions.
The responsible person's signature on this document indicates that the installed insulation meets the installation criteria specified in Table A – INSTALLATION.	

B. RAISED FLOOR	
01	All gaps in the raised floor are sealed.
02	All chases sealed at floor level using a hard cover and the hard covers are sealed.
03	All Plumbing and electrical wires that penetrate the floor must be sealed.
04	Subfloor sheathing is glued or sealed at all exterior panel edges, to create a continuous air tight subfloor.
The responsible person's signature on this document indicates that the installed insulation meets the installation criteria specified in Table B – RAISED FLOOR.	

C. WALLS	
01	Exterior walls are sealed to every floor on every story.
02	All gaps around windows and doors are sealed. Proper sealant used was as specified by window manufacturer.
03	All gaps around windows and doors are filled with insulation. Batt insulation is not allowed to be stuffed into gap.
04	All plumbing and wiring penetrations through the top and bottom of panels, and electrical boxes that penetrate the wall are sealed.
05	All SIP panel joints sealed at the interior of the wall and the exterior of each panel.
06	Fan exhaust ducts that run between conditioned floors to exterior walls must include a damper at the exterior wall.
06	Header sealed to wall with continues foam or caulk per manufacturer directions.
The responsible person's signature on this document indicates that the installed insulation meets the installation criteria specified in Table C – WALLS.	

D. SIP CEILING	
01	For vented attics use the CF3R-ENV-22.
02	For non-vented attics ensure all penetrations through the roof deck and gable ends are sealed and air tight.
The responsible person's signature on this document indicates that the installed insulation meets the installation criteria specified in Table D – SIP CEILING.	

E. CONDITIONED SPACE ABOVE OR ADJACENT TO GARAGE AIR BARRIER		
All penetration in the subfloor above the garage into conditioned space must follow the raised floor air barrier requirements above.		
01	The builder needs to ensure infiltration does not enter the house between the space above the garage and subfloor. Select the option used:	
02	[Y or No]	(a) Sealed all edges of garage ceiling (typical drywall) at the perimeter of the garage to create a continuous air tight surface between the garage and adjacent conditioned envelope. Seal all plumbing, electric and mechanical penetrations between the garage and the adjacent conditioned space on. For an open-web truss, airtight blocking must be added on four sides of the garage perimeter. Insulation can be placed on the garage ceiling.
03	[Y or No]	(b) Seal band joist above the wall at the garage to conditioned space transition. Seal all subfloor seams and penetrations between the conditioned space and the garage. Insulation must be placed in contact of subfloor below conditioned space.
The responsible person's signature on this document indicates that the installed insulation meets the installation criteria specified in Table E – CONDITIONED SPACE ABOVE OR ADJACENT TO GARAGE AIR BARRIER		

F. CANTILEVERED FLOOR AIR BARRIER	
01	Airtight blocking shall be installed between joists where the wall rim joist would have been located in the absence of a cantilever.
02	Exterior sheathing shall be installed to the bottom of the cantilever so that there is a continuous air and weather barrier for the cantilever. The cantilevered joist must be insulated to the same R-value as for the subfloor.
03	Any gaps, cracks or penetrations in the air barrier of the cantilever shall be sealed. Recessed down lights in the cantilever is IC and AT rated and properly sealed to sheathing.
The responsible person's signature on this document indicates that the installed insulation meets the installation criteria specified in Table F – CANTILEVERED FLOOR AIR BARRIER	

For information and data collection only. Not valid until registered with a HERS provider

CERTIFICATE OF VERIFICATION		CF3R-ENV-21-H
Quality Insulation Installation (QII) – Air Infiltration Sealing - Framing Stage for SIP and ICF		(Page 2 of 3)
Project Name:	Enforcement Agency:	Permit Number:
Dwelling Address:	City	Zip Code

G. MULTIFAMILY AIR BARRIER	
01	Multifamily buildings require all the above plus each unit must control air movement across envelope components separating each dwelling.
02	Floor AND Ceiling of each Dwelling Unit – All penetrations through the floor and ceiling of each unit must be sealed including, electric and gas utilities, water pipes, drain pipes, fire protection service pipes, communication wiring etc.
03	Elevator penthouse, mechanical penthouse, stairwell doors, roof access hatch, plumbing stacks etc. sealed to reduce air transfer from attached spaces.
04	Common Walls – Bottom plate between units must be sealed to the subfloor. All penetration in the common walls is sealed. Interior walls that open into the common walls must be sealed.
05	Vertical Chases – All vertical chases are sealed at the floor and ceiling of each unit so air cannot transfer from first floor to second floor around chase.
06	Vertical Chases –The chases such as garbage chutes, elevator shafts, and HVAC ducting are sealed to stop air movement through the chase to surrounding spaces.
07	Common Hallways – Penetrations between dwelling unit and common hallways are sealed including doors to the dwelling unit are gasketed or made substantially airtight.
The responsible person's signature on this document indicates that the installed insulation meets the installation criteria specified in Table G – MULTIFAMILY AIR BARRIER	

For information and data collection only. Not valid until registered with a HERS provider

CERTIFICATE OF VERIFICATION		CF3R-ENV-21-H
Quality Insulation Installation (QII) – Air Infiltration Sealing - Framing Stage for SIP and ICF		(Page 3 of 3)
Project Name:	Enforcement Agency:	Permit Number:
Dwelling Address:	City	Zip Code

DOCUMENTATION AUTHOR'S DECLARATION STATEMENT	
1. I certify that this Certificate of Verification documentation is accurate and complete.	
Documentation Author Name:	Documentation Author Signature:
Company:	Date Signed:
Address:	CEA/HERS Certification Information (if applicable):
City/State/Zip:	Phone:

RESPONSIBLE PERSON'S DECLARATION STATEMENT

I certify the following under penalty of perjury, under the laws of the State of California:

1. The information provided on this Certificate of Verification is true and correct.
2. I am the certified HERS Rater who performed the verification identified and reported on this Certificate of Verification (responsible rater).
3. The installed features, materials, components, manufactured devices, or system performance diagnostic results that require HERS verification identified on this Certificate of Verification comply with the applicable requirements in Reference Appendices RA2, RA3, and the requirements specified on the Certificate of Compliance for the building approved by the enforcement agency.
4. The information reported on applicable sections of the Certificate(s) of Installation (CF2R) signed and submitted by the person(s) responsible for the construction or installation conforms to the requirements specified on the Certificate(s) of Compliance (CF1R) approved by the enforcement agency.
5. I will ensure that a registered copy of this Certificate of Verification shall be posted, or made available with the building permit(s) issued for the building, and made available to the enforcement agency for all applicable inspections. I understand that a registered copy of this Certificate of Verification is required to be included with the documentation the builder provides to the building owner at occupancy.

BUILDER OR INSTALLER INFORMATION AS SHOWN ON THE CERTIFICATE OF INSTALLATION	
Company Name (Installing Subcontractor, General Contractor, or Builder/Owner):	
Responsible Builder or Installer Name:	CSLB License:
HERS PROVIDER DATA REGISTRY INFORMATION	
Sample Group Number (if applicable):	Dwelling Test Status in Sample Group (if applicable)
HERS RATER INFORMATION	
HERS Rater Company Name:	
Responsible Rater Name:	Responsible Rater Signature:
Responsible Rater Certification Number w/ this HERS Provider	Date Signed:

For information and data collection only. Not valid until registered with a HERS provider

AIR INFILTRATION SEALING – CEILING/ROOF DECK

CERTIFICATE OF VERIFICATION		CF3R-ENV-22-H
Quality Insulation Installation (QII) - Air Infiltration Sealing - Ceiling/Roof Deck		(Page 1 of 2)
Project Name:	Enforcement Agency:	Permit Number:
Dwelling Address:	City	Zip Code

For typical vented attics where the insulation is at the roof deck ceiling air barrier must be verified after the ceiling drywall is installed and before attic insulation is installed. If SPF will be used in the attic this can be considered the air barrier. Soffit and chase's must still be covered and chimneys and flues require metal flashing. Buildings with a Non vented attic all air sealing requirements appropriate for the roof must be verified.

A. CEILING INSPECTION – Vented Attics	
01	There is a continuous air barrier at the ceiling level. All opening into walls, drops, chasses, double walls are sealed. Examples are below.
02	Chimney's and Flue's require sheet metal flashing. The flashing shall be sealed to the chimney/flue with fire rated caulk. The flashing shall be sealed to the surrounding framing.
3	All penetration through the top plate of interior and exterior walls are sealed.
04	Electrical boxes, fire alarm boxes, fire sprinklers, cut into ceiling are sealed to the surrounding drywall and all gaps in the box are sealed. If not possible to seal fixture directly a secondary air barrier was created around the fixture.
05	All installed recessed light fixtures that penetrate the ceiling to unconditioned space are rated to be Insulation Contact and Air Tight (IC and AT) which allows direct contact with insulation. Housing is sealed to the drywall.
06	Exhaust fan housing is sealed to surrounding drywall and all holes and seams in the housing sealed.
07	All soffits and chases are covered with a hard cover that is sealed to the framing with caulk or foam.
08	Double walls that open to attic are covered and the cover sealed to the framing.
09	Attic Access forms airtight seal from conditioned space to unconditioned space. Vertical attic access requires mechanical compression using screws, or latches.
10	Knee walls require solid and sealed blocking at the bottom, top left side and right side of the knee wall. When the knee wall is placed on top of a subfloor the open cavity below the subfloor and the ceiling below are sealed.
11	HVAC ducts that travel down a chase the chase are sealed at the ceiling level.
12	HVAC boots that penetrate the ceiling are sealed to the surrounding drywall.
13	All top plates of interior and exterior walls sealed to drywall.
16	Attic access must be surrounded with a dam at least the same depth as the insulation to prevent loss of ceiling insulation.
17	There must be a dam placed at the exterior edge of all kneewalls and all edges of insulation to stop air movement through insulation.
The responsible person's signature on this document indicates that the air sealing requirements above meets the installation criteria specified in Table A – CEILING INSPECTION – Vented Attics.	

B. ROOF INSPECTION – Non vented attics	
01	There is a continuous air barrier at the roof deck and gable ends.
02	Chimney's and Flue's require sheet metal flashing at the roof deck. The flashing is sealed to the chimney/flue with fire rated caulk. The flashing is sealed to the surrounding framing.
03	All penetrations for plumbing, electrical etc in the roof deck and gable ends are sealed.
The responsible person's signature on this document indicates that the air sealing requirements above meets the installation criteria specified in Table B – ROOF INSPECTION – Non vented attics.	

For information and data collection only. Not valid until registered with a HERS provider

CERTIFICATE OF VERIFICATION		CF3R-ENV-22-H
Quality Insulation Installation (QII) - Air Infiltration Sealing - Ceiling/Roof Deck		(Page 2 of 2)
Project Name:	Enforcement Agency:	Permit Number:
Dwelling Address:	City	Zip Code

DOCUMENTATION AUTHOR'S DECLARATION STATEMENT

1. I certify that this Certificate of Verification documentation is accurate and complete.

Documentation Author Name:	Documentation Author Signature:
Company:	Date Signed:
Address:	CEA/HERS Certification Information (if applicable):
City/State/Zip:	Phone:

RESPONSIBLE PERSON'S DECLARATION STATEMENT

I certify the following under penalty of perjury, under the laws of the State of California:

1. The information provided on this Certificate of Verification is true and correct.
2. I am the certified HERS Rater who performed the verification identified and reported on this Certificate of Verification (responsible rater).
3. The installed features, materials, components, manufactured devices, or system performance diagnostic results that require HERS verification identified on this Certificate of Verification comply with the applicable requirements in Reference Appendices RA2, RA3, and the requirements specified on the Certificate of Compliance for the building approved by the enforcement agency.
4. The information reported on applicable sections of the Certificate(s) of Installation (CF2R) signed and submitted by the person(s) responsible for the construction or installation conforms to the requirements specified on the Certificate(s) of Compliance (CF1R) approved by the enforcement agency.
5. I will ensure that a registered copy of this Certificate of Verification shall be posted, or made available with the building permit(s) issued for the building, and made available to the enforcement agency for all applicable inspections. I understand that a registered copy of this Certificate of Verification is required to be included with the documentation the builder provides to the building owner at occupancy.

BUILDER OR INSTALLER INFORMATION AS SHOWN ON THE CERTIFICATE OF INSTALLATION

Company Name (Installing Subcontractor, General Contractor, or Builder/Owner):	
Responsible Builder or Installer Name:	CSLB License:

HERS PROVIDER DATA REGISTRY INFORMATION

Sample Group Number (if applicable):	Dwelling Test Status in Sample Group (if applicable)

HERS RATER INFORMATION

HERS Rater Company Name:	
Responsible Rater Name:	Responsible Rater Signature:
Responsible Rater Certification Number w/ this HERS Provider	Date Signed:

For information and data collection only. Not valid until registered with a HERS provider

CERTIFICATE OF VERIFICATION		CF3R-ENV-23-H
Quality Insulation Installation (QII) - Insulation Stage		(Page 1 of 4)
Project Name:	Enforcement Agency:	Permit Number:
Dwelling Address:	City	Zip Code

A. QUALITY INSULATION INSTALLATION (QII) INSULATION STAGE	
01	Insulation shall be installed to the requirements of Reference Residential Appendices, RA 3.5.
02	Air barrier installation and preparation for insulation was done at framing stage prior to insulation being installed
03	All structural framing areas shall be insulated in a manner that resists thermal bridging of the assembly separating conditioned from unconditioned space. Structural bracing, tie-downs, and framing of steel, or specialized framing used to meet structural requirements of the CBC are allowed and must be insulated. These areas shall be called out on the building plans with diagrams and/or specific design drawings indicating the R-value of insulation and fastening method to be used. It is recommended that spray foam be use.
04	Medium and light density Spray Foam (SPF) manufacturers claim various R-values per inch. In California the maximum R-value that can be claimed for close cell SPF (ccSPF) is an R-value of 5.8 per inch and for open cell SPF (ocSPF) is an R-value of 3.6 per inch, unless documentation is provided showing that the product and/or manufacturer has a current ICC Evaluation Service Report (ESR) that shows compliance with *Acceptance Criteria for Spray-Applied Foam Plastic Insulation--AC377*.
05	All insulation was installed to the manufactures insulation installation instructions.
The responsible person's signature on this document indicates that the installed insulation meets the installation criteria specified in Table A – QUALITY INSULATION INSTALLATION (QII) INSULATION STAGE.	

B. QUALITY OF ALL INSTALLED INSULATION	
01	Installed insulation R-values is the same or greater than specified on the CF1R.
02	No gaps or voids between the insulation and framing.
03	Gaps between studs shall be filled with insulation.
04	Batt - ensure the ends are cut so there are no gaps.
05	Batt - Insulation is cut around obstructions like electrical boxes and no gaps exist.
06	Batt - insulation is not compressed (no stuffing of the insulation into the cavity).
07	Batt insulation is delaminated around all plumbing and electrical lines in ceilings, walls and floors.
08	An air barrier is installed at all exposed edge of insulation.
09	Loose-fill insulation installed to the minimum installed weight per square foot per the manufacturer's labeled R-value specification.
10	Rigid board insulation shall be installed according to the manufacturer's installation instructions.
11	SPF insulation shall be spray-applied to fully adhere to structural assembly framing, floor and ceiling joists, and other framing surfaces within the construction cavity.
12	SPF - with multiple layers applied, each foam lift (i.e. spray application) adheres to the substrate and foam interfaces.
13	SPF - if values other than R-5.8 per inch for ccSPF and R-3.6 per inch for ocSPF is used, then an ICC Evaluation Service Report (ESR) is attached and uploaded to the HERS provider's web site.
14	ccSPF - in areas where an air barrier is required the foam is at least two inches thick.
15	ocSPF depressions in the foam insulation surface is not greater than 1-inch of the required thickness provided these depressions do not exceed 10% of the surface area being insulated.
16	ocSPF insulation does completely fill cavities of 2x4 inch framing or less.
17	ocSPF cavities greater than 2x4 inch framing are filled to the thickness that meets the required R-value used for compliance.
18	SPF installed as an air barrier is sprayed at a minimum of 5.5 inches in thickness for open cell and 2.0 inches for closed cell.
19	The insulation installer provided a CF2R-ENV-03 and CF2R-ENV-23. Labels or specification/data sheets are attached to the CF2R-ENV-03 for each insulating material. The material datasheet for the installed material meets the performance specifications of the required R-Values. Blown in material also includes insulation material bag labels or coverage charts.
The responsible person's signature on this document indicates that the installed insulation meets the installation criteria specified in Table B – QUALITY OF ALL INSTALLED INSUALTION.	

C. CEILING/ROOF INSULATION	
01	Insulation extends to the outside edge of the exterior top plates and is flush against any ventilation dams/baffles.
02	Insulation is in direct contact with ceiling so there are no gaps between the ceiling and the insulation.
03	Chimneys and flues (except for zero clearance) require sheet metal collar around the stack. The collar must be at least as tall as the depth of the insulation. The collar shall be 1" from the chimney/flue for double wall vent, and 6" from the chimney/flue for single wall vent" unless manufacturer requires otherwise. The collar must be sealed to the ceiling with high temperature sealant to prevent air leakage. The insulation is in contact with the sheet metal collar.
04	Required eave ventilation shall not be obstructed - the net free-ventilation area of the eave vent is maintained
05	Eave vent baffles are installed to prevent air movement under or into the ceiling insulation
06	Recessed downlights are covered with insulation. If they are not covered to the same depth as required by the CF1R for ceiling insulation then a area weighted calculation is required. Recessed downlights are AT and IC rated.

For information and data collection
Only. Not valid until registered with a
HERS provider

CERTIFICATE OF VERIFICATION		CF3R-ENV-23-H
Quality Insulation Installation (QII) - Insulation Stage		(Page 2 of 4)
Project Name:	Enforcement Agency:	Permit Number:
Dwelling Address:	City	Zip Code

07	Recessed downlights where SPF insulation is installed shall: (Note: SPF insulation shall not be applied directly to recessed lighting fixtures) (a) be covered with a minimum of 1.5 inches of mineral fiber insulation, or (b) be enclosed in a box fabricated from 1/4 inch plywood, 18 gauge metal, 3/8 inch hard board or gypboard. Hard board or gypboard do not cause a recessed downlights to meet the zero clearance insulation contact requirements.
08	Walkways and mechanical platforms are insulated to the same R-value as required by the CF1R for ceiling insulation. If not an area weighted calculation is completed and turned in with this form.
09	Soffits, chasses, drops have a sealed hard cover and the insulation is in direct contact with the hard cover.
10	Knee walls – an air dam the full depth of the ceiling insulation is added to the exterior edge of the knee wall so the ceiling insulation overlaps the knee wall to the full depth of the ceiling insulation.
11	Attic access doors are insulated to the same R-value required by the CF1R for roof insulation and the insulation is permanently attached using adhesive or mechanical fasteners. Preferred method is rigid insulation.
12	Attic Access forms airtight seal from conditioned space to unconditioned space. Vertical attic access requires mechanical compression using screws, or latches.
13	Attic access must have a dam around the access to at least the same depth as the insulation.
14	Insulation batts must be cut to fit around cross bracings and truss webs.
15	Attic rulers appropriate to the material are installed and evenly distributed throughout the attic to verify Depth (one ruler for every 250 square feet) The rulers are clearly readable from the attic access and scaled to read inches of insulation and the R-value installed.
16	Loose fill and SPF insulation a HERS rater shall measure the installed thickness (include low and high areas) and density of insulation in at least 6 random locations on walls, roof/ceilings and floors to ensure minimum thickness levels and the installed density meets the R-value specified on the Certificate of Compliance, and are consistent with the manufacturer's coverage chart.
17	Steel-framed kneewalls, skylight shafts, and gable ends, external surfaces of steel studs are covered with insulation
The responsible person's signature on this document indicates that the installed insulation meets the installation criteria specified in Table C – CEILING/ROOF INSULATION.	

D. WALL INSULATION	
1	**Batts, loose fill mineral fiber, mineral and natural wool, and cellulose:** fills cavity and is in contact with air barrier on six sides.
2	**ocSPF:** completely fill cavities of 2x4 inch framing or less. Not required to fill cavities greater than 2x4 inch framing unless required to meet R-value.
3	**ccSPF:** insulation is not required to fill the cavities of framed assemblies unless required to meet R-value.
4	**Double walls and bump-outs** - insulation fills the cavity, or additional air barrier is installed so the insulation fills the cavity and is in contact with the insulation on all six sides unless SPF is used. Insulation shall be installed on the exterior of the double walls/bump-outs.
5	Low expanding foam used around windows and doors, if allowed by the manufacturer. If not allowed fill cavity with insulation. Batts are not allowed to be stuffed into space.
6	Electrical panel in exterior insulated wall the panel is air tight and insulation is installed behind the panel.
7	Skylight shafts and attic knee wall insulation must meet all the requirements for walls and is in contact with the air barrier on six sides unless SPF is used.
12	Skylight shafts and attic kneewalls insulation shall be in full contact with the drywall or other interior wall finish. Batt insulation must be cut to fit around 2x4's that are laid flat.
13	Skylight shafts and attic kneewalls shall be completely enclosed by vertical and horizontal framing, including horizontal plates at top and bottom of the insulation.
14	Band/Rim joists are insulated to the same R-value as the wall.
The responsible person's signature on this document indicates that the installed insulation meets the installation criteria specified in Table D – WALL INSULATION.	

E. RAISED FLOOR INSULATION QUALITY	
1	Insulation is in full contact with subfloor.
2	Insulation hangers are spaced at 18 inches or less, insulation hangers do not compress insulation.
3	Netting or mesh can be used if the cavity under the floor is filled and in contact with the subfloor.
4	When daylight basements are adjacent to crawlspaces, if the basement is conditioned the walls adjacent to the crawlspace are insulated to the R-value listed on the CF-1R. This includes framed stem walls, and vertical concrete retaining walls.
5	If access to the crawlspace is from the conditioned area the raised floor includes an airtight insulated access hatch. Where possible locate crawl space access from the exterior.
The responsible person's signature on this document indicates that the installed insulation meets the installation criteria specified in Table E – RAISED FLOOR INSULATION QUALITY.	

For information and data collection only. Not valid until registered with a HERS Provider

CERTIFICATE OF VERIFICATION		CF3R-ENV-23-H
Quality Insulation Installation (QII) - Insulation Stage		(Page 3 of 4)
Project Name:	Enforcement Agency:	Permit Number:
Dwelling Address:	City	Zip Code

F. FLOOR ABOVE GARAGE INSULATION QUALITY	
1	Insulation must be in full contact with subfloor if the air barrier is at the band joist at the garage house wall.
2	Insulation hangers spaced at 18 inches or less, insulation hangers must not compress insulation.
3	Netting or mesh can be used if the cavity under the floor is filled and in contact with the subfloor.
4	If air barrier is at the perimeter of the garage below the conditioned subfloor then the insulation may be placed on the garage ceiling. Perimeter of subfloor must also be insulated.
The responsible person's signature on this document indicates that the installed insulation meets the installation criteria specified in Table F – FLOOR ABOVE GARAGE INSULATION QUALITY.	

G. CANTILEVERED FLOOR INSULATION QUALITY	
1	Insulation is in full contact with cantilevered subfloor. Insulation hangers are spaced at 18 inches or less, insulation hangers do not compress insulation. Netting or mesh can be used if the cavity under the floor is filled and in contact with the subfloor.
2	Sealed Blocking shall be installed between joists where the wall rim joist would have been located in the absence of a cantilever. Insulation shall be placed on both sides of this block.
The responsible person's signature on this document indicates that the installed insulation meets the installation criteria specified in Table G – ANTILEVERED FLOOR INSULATION QUALITY.	

H. ATTACHED PORCH ROOF INSULATION QUALITY	
1	Exterior wall at the intersection of the porch roof is fully insulated above, below and behind the roof line.
2	Where truss framing is used, airtight blocking is used at the top and bottom of each wall/roof section and insulated.
The responsible person's signature on this document indicates that the installed insulation meets the installation criteria specified in Table H – ATTACHED PORCH ROOF INSULATION QUALITY	

For information and data collection only. Not valid until registered with a HERS provider

CERTIFICATE OF VERIFICATION		CF3R-ENV-23-H
Quality Insulation Installation (QII) - Insulation Stage		(Page 4 of 4)
Project Name:	Enforcement Agency:	Permit Number:
Dwelling Address:	City	Zip Code

DOCUMENTATION AUTHOR'S DECLARATION STATEMENT	
1. I certify that this Certificate of Verification documentation is accurate and complete.	
Documentation Author Name:	Documentation Author Signature:
Company:	Date Signed:
Address:	CEA/HERS Certification Information (if applicable):
City/State/Zip:	Phone:

RESPONSIBLE PERSON'S DECLARATION STATEMENT

I certify the following under penalty of perjury, under the laws of the State of California:

1. The information provided on this Certificate of Verification is true and correct.
2. I am the certified HERS Rater who performed the verification identified and reported on this Certificate of Verification (responsible rater).
3. The installed features, materials, components, manufactured devices, or system performance diagnostic results that require HERS verification identified on this Certificate of Verification comply with the applicable requirements in Reference Appendices RA2, RA3, and the requirements specified on the Certificate of Compliance for the building approved by the enforcement agency.
4. The information reported on applicable sections of the Certificate(s) of Installation (CF2R) signed and submitted by the person(s) responsible for the construction or installation conforms to the requirements specified on the Certificate(s) of Compliance (CF1R) approved by the enforcement agency.
5. I will ensure that a registered copy of this Certificate of Verification shall be posted, or made available with the building permit(s) issued for the building, and made available to the enforcement agency for all applicable inspections. I understand that a registered copy of this Certificate of Verification is required to be included with the documentation the builder provides to the building owner at occupancy.

BUILDER OR INSTALLER INFORMATION AS SHOWN ON THE CERTIFICATE OF INSTALLATION	
Company Name (Installing Subcontractor, General Contractor, or Builder/Owner):	
Responsible Builder or Installer Name:	CSLB License:
HERS PROVIDER DATA REGISTRY INFORMATION	
Sample Group Number (if applicable):	Dwelling Test Status in Sample Group (if applicable)
HERS RATER INFORMATION	
HERS Rater Company Name:	
Responsible Rater Name:	Responsible Rater Signature:
Responsible Rater Certification Number w/ this HERS Provider	Date Signed:

For information and data collection only. Not valid until registered with a HERS provider

For information and data collection only. Not valid until registered with a HERS provider

A. GENERAL INFORMATION

01	Project Name:				
02	Calculation Description				
03	Input File Name				
04	Multifamily/Subdivision Name				
05	Project Location:		06	Rule Set Filename:	
07	CA City :		08	Compliance Method:	
09	Zip code		10	Compliance Software:	
11	Climate Zone:		12	Bldg Front Orientation (deg or cardinal):	
13	Building Type:		14	Number of Dwelling Units:	
15	Construction Type:		16	Number of Zones:	
17	Total Cond. Floor Area (FT2):		18	Number of Stories:	
19	Slab Area (FT2):		20	Average Ceiling Height (FT):	
21	Addition Cond Floor Area (FT2):		22	Natural Gas on site?:	
23	Addition Slab Area (FT2):		24	Glazing Percentage (%):	

Verification Status:

B. OPAQUE SURFACES - Roof Details (Gray columns are informational and need not be verified by Rater)*

Roof Type	Roof Pitch	Aged (or Initial?) Solar Reflectance	Thermal Emittance	Frame Type	Frame Depth (in)	Frame Spacing (in)	R-Value Above Deck	R-Value Below Deck	Status

Verification Status:

C. OPAQUE SURFACES - Attic Details (Gray columns are informational and need not be verified by Rater)*

Dwelling Unit	Frame Type	Area (ft^2)	U-factor	Cavity R-value	Continuous Insulation R-value	Actual Azimuth (deg)	Tilt	Solar Gains	Appendix JA4 Reference	Attic Ventilation	Status

Verification Status:

D. OPAQUE SURFACES - Floor Details (Gray columns are informational and need not be verified by Rater)*

Dwelling Unit	Surface Type	Frame Type	Area (ft^2)	U-factor	Cavity R-value	Continuous Insulation R-value	Tilt	Solar Gains	Appendix JA4 Reference	Status

Verification Status:

E. OPAQUE SURFACES – Wall Details (Gray columns are informational and need not be verified by Rater)*

Surface Type	Frame Type	Area (ft^2)	U-factor	Cavity R-value	Continuous Insulation R-value	Actual Azimuth	Tilt	Solar Gains	Appendix JA4 Reference	Location/Comments	Status

Verification Status:

F. FENESTRATION SURFACES*

Orientation	Surface	Area (ft^2)	U-factor	SHGC	Source	Actual Azimuth	Tilt	Film SHGC	Location/Glazing Type	Status

Verification Status:

G. EXTERIOR SHADING*

Window					Overhang				Side Fin				Status
Surface	Exterior Shade Type	Area (ft^2)	Width	Height	Depth	Height	Left Extension	Right Extension	Left Dist	Left Len	Right Dist	Right Len	

Verification Status:

H. HVAC SYSTEMS*

HVAC System Name	Heating System Type	Heating Efficiency	Cooling System Type	Cooling Efficiency SEER	Cooling Efficiency EER	duct system Name	Fan Type	Status

Verification Status:

I. HVAC DUCT SYSTEMS*

Duct System Name	Return Duct System Type	Return Duct R-Value	Return Duct Location	Supply Duct System Name	Supply Duct R-Value	Supply Duct Location	Status

Verification Status:

J. WATER HEATING SYSTEMS*

Water Heating System Name	Water Heating System Type	Central Distribution Type	Dwelling Unit Distribution Type	DHW Water Heater Type	Energy Factor or Recovery Efficiency or Thermal Efficiency	Rated Output (Btuh)	Standby Loss Total (Btuh)	Pilot Energy (Btuh)	Standby Loss (%)	Water Heater Volume (gal)	Number of water heaters in System	Water Heater Tank Exterior Insulation	Supplemental Tank Volume (gal)	Supplemental Tank External Insulation R-value	Supplemental Tank Interior Insulation R-Value	Status

Verification Status:

K. HYDRONIC HEATING SYSTEM PIPING*

System Name	Pipe Length (FT)	Nominal Pipe Diameter (inch)	Insulation R-Value	Status

Verification Status:

DOCUMENTATION AUTHOR'S DECLARATION STATEMENT

1. I certify that this Certificate of Verification documentation is accurate and complete.

Documentation Author Name:	Documentation Author Signature:
Company:	Date Signed:
Address:	CEA/HERS Certification Information (if applicable):
City/State/Zip:	Phone:

RESPONSIBLE PERSON'S DECLARATION STATEMENT

I certify the following under penalty of perjury, under the laws of the State of California:

1. The information provided on this Certificate of Verification is true and correct.
2. I am the certified HERS Rater who performed the verification identified and reported on this Certificate of Verification (responsible rater).
3. I will ensure that a registered copy of this Certificate of Verification shall be posted, or made available with the building permit(s) issued for the building, and made available to the enforcement agency for all applicable inspections. I understand that a registered copy of this Certificate of Verification is required to be included with the documentation the builder provides to the building owner at occupancy.

HERS RATER INFORMATION

HERS Rater Company Name:	
Responsible Rater Name:	Responsible Rater Signature:
Responsible Rater Certification Number w/ this HERS Provider	Date Signed:

Instructions:
The vast majority of this form will be data transferred from the CF1R and software input file. This data is to be verified by the HERS rater, with the exception of columns that are "grayed out". These are provided for informational purposes only and the Rater does not need to verify this information. Each section above could have no rows to verify, or it could have many, depending on how the building was modeled. Each row needs to be verified. If the information in a particular row is not acceptable, the Rater will overwrite the incorrect information and a blank row will appear under the current row. The Rater will use this row to explain why it is an error. This may be for one or all of the columns for that row.
If any rows are overwritten "Fail" will appear in the last row of that section ("Verification Status"). The Rater must enter a general description of what failed and why.
If an item is missing from the list, (for example: five windows should have been modeled but only four appear on the list), the Rater can enter "Fail" in the last row and explain what is missing.
Generally Speaking, an item (row and column) should fail if what appears on this form is "worse" than what exists in the home (i.e., results in higher modeled energy use). For example, if R-0 appears on this form as the ceiling insulation but the existing home has some insulation, it should be marked as a fail Conversely, if this form shows R13 as the ceiling insulation, but only R-11 exists, this should not be marked as a fail. If the determination of "worse" is not readily apparent (e.g., wrong roof type specified), then it should be marked as a fail.

Sections:
A. General Information
Rater should verify this information to the best of their ability. Any questions or deviations should be indicated in the Verification Status row.

B. OPAQUE SURFACES - Roof Details (Gray columns are informational and need not be verified by Rater)
Existing roof type, R-value above deck and R-value below deck should all be verified.

C. OPAQUE SURFACES - Attic Details (Gray columns are informational and need not be verified by Rater)
Existing dwelling unit, frame type, area, u-factor, and R-values should all be verified.

D. OPAQUE SURFACES - Floor Details (Gray columns are informational and need not be verified by Rater)
Existing dwelling unit, surface type, frame type, area, u-factor, and R-values should all be verified.

E. OPAQUE SURFACES – Wall Details (Gray columns are informational and need not be verified by Rater)
Existing wall type, frame type, area, u-factor and R-values, should all be verified.

F. FENESTRATION SURFACES
All columns of this section should be verified.

G. EXTERIOR SHADING
All columns of this section should be verified.

H. HVAC SYSTEMS
All columns of this section should be verified.

I. HVAC DUCT SYSTEMS
All columns of this section should be verified.

J. WATER HEATING SYSTEMS
All columns of this section should be verified.

K. HYDRONIC HEATING SYSTEM PIPING
All columns of this section should be verified

DUCT LEAKAGE DIAGNOSTIC TEST

CERTIFICATE OF VERIFICATION		CF3R-MCH-20-H
Duct Leakage Diagnostic Test		(Page 1 of 3)
Project Name:	Enforcement Agency:	Permit Number:
Dwelling Address:	City	Zip Code

A. System Information		
01	HVAC System Identification or Name:	
02	HVAC System Location or Area Served:	
03	Building Type from CF1R	
04	Verified Low Leakage Ducts in Conditioned Space (VLLDCS)	
05	Verified Low Leakage Air-handling Unit	
06	Duct System Compliance Category:	

B. Duct Leakage Diagnostic Test - MCH-20a - Completely New Duct System		
01	Condenser Nominal Cooling Capacity (ton)	
02	Heating Capacity (kBtu/h)	
03	Conditioned Floor Area Served by this HVAC System (ft2)	
04	Duct Leakage Test Conditions	
05	Duct Leakage Test Method?	
06	LeakageFactor ( )	
07	Air-Handling Unit Airflow (AHUAirflow) Determination Method	
08	Measured AHUAirflow (cfm)	
09	Calculated Target Allowable Duct Leakage Rate (cfm)	
10	Actual duct leakage rate from leakage test measurement (cfm)	
11	Compliance statement:	
12	Notes:	

For information and data collection only. Not valid until registered with a HERS provider

CERTIFICATE OF VERIFICATION		CF3R-MCH-20-H
Duct Leakage Diagnostic Test		(Page 2 of 3)
Project Name:	Enforcement Agency:	Permit Number:
Dwelling Address:	City	Zip Code

C. ADDITIONAL REQUIREMENTS FOR COMPLIANCE	
The responsible persons signature on this document indicates the installation complies with the following requirements:	
01	System was tested in its normal operation condition. No temporary taping allowed.
02	Outside air (OA) ducts for Central Fan Integrated (CFI) ventilation systems shall not be sealed/taped off during duct leakage testing. CFI OA ducts that utilize controlled motorized dampers, that open only when OA ventilation is required to meet ASHRAE Standard 62.2, and close when OA ventilation is not required, may be configured to the closed position during duct leakage testing.
03	All supply and return register boots were sealed to the drywall.
04	Building cavities were not used as plenums or platform returns in lieu of ducts.
05	If cloth backed tape was used it was covered with Mastic and draw bands.
06	All connection points between the air handler and the supply and return plenums are completely sealed.
Visual Inspection at Final Construction Stage (applicable if system was tested at rough-in) After installing the interior finishing wall and verifying that the above rough-in tests was completed, the following procedure must be performed	
07	For all supply and return registers, verify that the spaces between the register boot and the interior finishing wall are properly sealed.
08	If the house rough-in duct leakage test was conducted without an air handler installed, inspect the connection points between the air handler and the supply and return plenums to verify that the connection points are properly sealed.
09	Inspect all joints to ensure that no cloth backed rubber adhesive duct tape is used.
10	Verification Status
If Verification Status for this table indicates “Fail”, the reason shall be described in the correction notes for this table.	
Correction Notes for this table:	
The responsible person’s signature on this document indicates that the installation meets these requirements specified in Table C.	

For information and data collection only. Not valid until registered with a HERS provider

CERTIFICATE OF VERIFICATION		CF3R-MCH-20-H
Duct Leakage Diagnostic Test		(Page 3 of 3)
Project Name:	Enforcement Agency:	Permit Number:
Dwelling Address:	City	Zip Code

DOCUMENTATION AUTHOR'S DECLARATION STATEMENT	
1. I certify that this Certificate of Verification documentation is accurate and complete.	
Documentation Author Name:	Documentation Author Signature:
Company:	Date Signed:
Address:	CEA/HERS Certification Information (if applicable):
City/State/Zip:	Phone:

RESPONSIBLE PERSON'S DECLARATION STATEMENT

I certify the following under penalty of perjury, under the laws of the State of California:

1. The information provided on this Certificate of Verification is true and correct.
2. I am the certified HERS Rater who performed the verification identified and reported on this Certificate of Verification (responsible rater).
3. The installed features, materials, components, manufactured devices, or system performance diagnostic results that require HERS verification identified on this Certificate of Verification comply with the applicable requirements in Reference Appendices RA2, RA3, and the requirements specified on the Certificate of Compliance for the building approved by the enforcement agency.
4. The information reported on applicable sections of the Certificate(s) of Installation (CF2R) signed and submitted by the person(s) responsible for the construction or installation conforms to the requirements specified on the Certificate(s) of Compliance (CF1R) approved by the enforcement agency.
5. I will ensure that a registered copy of this Certificate of Verification shall be posted, or made available with the building permit(s) issued for the building, and made available to the enforcement agency for all applicable inspections. I understand that a registered copy of this Certificate of Verification is required to be included with the documentation the builder provides to the building owner at occupancy.

BUILDER OR INSTALLER INFORMATION AS SHOWN ON THE CERTIFICATE OF INSTALLATION	
Company Name (Installing Subcontractor, General Contractor, or Builder/Owner):	
Responsible Builder or Installer Name:	CSLB License:

HERS PROVIDER DATA REGISTRY INFORMATION	
Sample Group Number (if applicable):	Dwelling Test Status in Sample Group (if applicable)

HERS RATER INFORMATION	
HERS Rater Company Name:	
Responsible Rater Name:	Responsible Rater Signature:
Responsible Rater Certification Number w/ this HERS Provider	Date Signed:

For information and data collection only. Not valid until registered with a HERS provider

A. System Information

01. *HVAC System Identification or Name*: Same data given on CF2R-MCH-20; provides an identification name or tag name that uniquely identifies the duct system. If there is a mechanical plan for the system, the tag name may be given on the plans.
02. *HVAC System Location or Area Served*: Same data given on CF2R-MCH-20; provides a brief description of the area served by the duct system (e.g. upstairs; downstairs).
03. *Building Type*: Same data given on CF2R-MCH-20.
04. *Verified Low Leakage Ducts in Conditioned Space (VLLDCS)*: Same data given on CF2R-MCH-20; Details whether or not VLLDCS is required per CF1R.
05. *Verified Low Leakage Air-handling Unit (VLLAHU)*: Same data given on CF2R-MCH-20; Details whether or not VLLAHU is required per CF1R.
06. *Duct System Compliance Category*: Same data given on CF2R-MCH-20

B. Duct Leakage Diagnostic Test - MCH-20a - Completely New Duct System

01. *Condenser Nominal Cooling Capacity (ton)*: Enter the installed condenser nominal cooling capacity in tons.
02. *Heating Capacity (kBtu/h)*: Enter the installed heating capacity in kBtu/h.
03. *Conditioned Floor Area Served by this HVAC System(ft^2)*: User must input CFA for the space. Should be consistent with the data given on CF2R-MCH-20.
04. *Duct Leakage Test Conditions*: Same data given on CF2R-MCH-20.
05. *Duct Leakage Test Method*: Same data given on CF2R-MCH-20.
06. *Leakage Factor*: Same data given on CF2R-MCH-20.
07. *Air-Handling Unit Airflow (AHUAirflow) Determination Method*: Same data given on CF2R-MCH-20.
08. *Measured AHU Airflow (CFM)*: If "Measured Airflow Method" is selected in row B07, user must input measured airflow.
09. *Calculated Target Allowable Duct Leakage Rate (cfm)*: This value will be automatically populated depending on values in B6, B7, and B8.
10. *Actual Duct Leakage Rate from Leakage Test Measurement (cfm)*: User will input this value from actual measurements from leakage test.
11. *Compliance Statement*: If Actual Duct Leakage Rate from leakage test (B10) is less than or equal to Calculated Target Allowable Duct Leakage Rate, "System passes leakage test" will automatically populate. If not, "System fails leakage test" will automatically populate.
12. *Notes*: If the installed cooling or heating capacities or CFA of the area served by the HVAC system does not match the Installation Certificate, then a note indicating the discrepancy will be displayed.

C. Additional Requirements for Compliance

10. Verification Status: Select from the pull down list either "Pass" or "Fail", indicating if the installation meets the additional requirements of Table C.

Correction Notes for this Table: If the installation fails to comply with these additional requirements, the correction must be specified.

For information and data collection only. Not valid until registered with a HERS provider

DUCT LEAKAGE DIAGNOSTIC TEST

CERTIFICATE OF VERIFICATION		CF3R-MCH-20-H
Duct Leakage Diagnostic Test		(Page 1 of 2)
Project Name:	Enforcement Agency:	Permit Number:
Dwelling Address:	City	Zip Code

A. System Information		
01	HVAC System Identification or Name:	
02	HVAC System Location or Area Served:	
03	Building Type from CF1R	
04	Verified Low Leakage Ducts in Conditioned Space (VLLDCS)	
05	Verified Low Leakage Air-handling Unit	
06	Duct System Compliance Category:	

B. 20b. Duct Leakage Diagnostic Test - Low Leakage Ducts in Conditioned Space		
01	System compliance with visual inspection per RA3.1.4.1.3? (registered MCH-21 is required)	
02	Duct Leakage Test Conditions	
03	Duct Leakage Test Method	
04	Target Allowable Duct Leakage Rate (cfm)	
05	Actual duct leakage rate from leakage test measurement (cfm)	
06	Compliance statement:	

C. ADDITIONAL REQUIREMENTS FOR COMPLIANCE		
The responsible persons signature on this document indicates the installation complies with the following requirements:		
01	System was tested in its normal operation condition. No temporary taping allowed.	
02	Outside air (OA) ducts for Central Fan Integrated (CFI) ventilation systems, shall not be sealed/taped off during duct leakage testing. CFI OA ducts that utilize controlled motorized dampers, that open only when OA ventilation is required to meet ASHRAE Standard 62.2, and close when OA ventilation is not required, may be configured to the closed position during duct leakage testing.	
03	All supply and return register boots were sealed to the drywall.	
04	Building cavities were not used as plenums or platform returns in lieu of ducts.	
05	If cloth backed tape was used it was covered with Mastic and draw bands.	
06	All connection points between the air handler and the supply and return plenums are completely sealed.	
07	Verification Status	
If Verification Status for this table indicates "Fail", the reason shall be described in the correction notes for this table.		
Correction Notes for this table:		
The responsible person's signature on this document indicates that the installation meets these requirements specified in Table C.		

For information and data collection only. Not valid until registered with a HERS provider

CERTIFICATE OF VERIFICATION		CF3R-MCH-20-H
Duct Leakage Diagnostic Test		(Page 2 of 2)
Project Name:	Enforcement Agency:	Permit Number:
Dwelling Address:	City	Zip Code

DOCUMENTATION AUTHOR'S DECLARATION STATEMENT

1. I certify that this Certificate of Verification documentation is accurate and complete.

Documentation Author Name:	Documentation Author Signature:
Company:	Date Signed:
Address:	CEA/HERS Certification Information (if applicable):
City/State/Zip:	Phone:

RESPONSIBLE PERSON'S DECLARATION STATEMENT

I certify the following under penalty of perjury, under the laws of the State of California:

1. The information provided on this Certificate of Verification is true and correct.
2. I am the certified HERS Rater who performed the verification identified and reported on this Certificate of Verification (responsible rater).
3. The installed features, materials, components, manufactured devices, or system performance diagnostic results that require HERS verification identified on this Certificate of Verification comply with the applicable requirements in Reference Appendices RA2, RA3, and the requirements specified on the Certificate of Compliance for the building approved by the enforcement agency.
4. The information reported on applicable sections of the Certificate(s) of Installation (CF2R) signed and submitted by the person(s) responsible for the construction or installation conforms to the requirements specified on the Certificate(s) of Compliance (CF1R) approved by the enforcement agency.
5. I will ensure that a registered copy of this Certificate of Verification shall be posted, or made available with the building permit(s) issued for the building, and made available to the enforcement agency for all applicable inspections. I understand that a registered copy of this Certificate of Verification is required to be included with the documentation the builder provides to the building owner at occupancy.

BUILDER OR INSTALLER INFORMATION AS SHOWN ON THE CERTIFICATE OF INSTALLATION

Company Name (Installing Subcontractor, General Contractor, or Builder/Owner):	
Responsible Builder or Installer Name:	CSLB License:

HERS PROVIDER DATA REGISTRY INFORMATION

Sample Group Number (if applicable):	Dwelling Test Status in Sample Group (if applicable)

HERS RATER INFORMATION

HERS Rater Company Name:	
Responsible Rater Name:	Responsible Rater Signature:
Responsible Rater Certification Number w/ this HERS Provider	Date Signed:

For information and data collection only. Not valid until registered with a HERS provider

A. System Information

01. *HVAC System Identification or Name*: Same data given on CF2R-MCH-20; provides an identification name or tag name that uniquely identifies the duct system. If there is a mechanical plan for the system, the tag name may be given on the plans.
02. *HVAC System Location or Area Served*: Same data given on CF2R-MCH-20; provides a brief description of the area served by the duct system (e.g. upstairs; downstairs).
03. *Building Type*: Same data given on CF2R-MCH-20.
04. *Verified Low Leakage Ducts in Conditioned Space (VLLDCS)*: Same data given on CF2R-MCH-20; Details whether or not VLLDCS is required per CF1R.
05. *Verified Low Leakage Air-handling Unit (VLLAHU)*: Same data given on CF2R-MCH-20; Details whether or not VLLAHU is required per CF1R.
06. *Duct System Compliance Category*: Same data given on CF2R-MCH-20

B. 20b. Duct Leakage Diagnostic Test - Low Leakage Ducts in Conditioned Space

01. *System compliance with visual inspection per RA3.1.4.1.2? (registered CF3R-MCH-21 is required)*: This field will be automatically filled. A *CF3R-MCH-21* must be registered to certify a visual inspection confirms the space conditioning system is located entirely in conditioned space in accordance with RA3.1.4.1.3. If any part of the duct system is outside of conditioned space, the system does not pass.
02. *Duct Leakage Test Conditions*: Same data given on CF2R-MCH-20.
03. *Duct Leakage Test Method*: Same data given on CF2R-MCH-20.
04. *Target Allowable Duct Leakage Rate (cfm)*: Same data given on CF2R-MCH-20.
05. *Actual Leakage Rate (cfm):* Enter the actual leakage from the test.
06. *Compliance statement:* This field will be automatically filled. The test passes if actual leakage rate is less than or equal to 25 cfm and a *CF3R-MCH-21* has been registered.

C. Additional Requirements for Compliance

07. *Verification Status: Select from the pull down list either "Pass" or "Fail", indicating if the installation meets the additional requirements of Table C.*

Correction Notes for this Table: If the installation fails to comply with these additional requirements, the correction must be specified.

For information and data collection only. Not valid until registered with a HERS provider

DUCT LEAKAGE DIAGNOSTIC TEST

CERTIFICATE OF VERIFICATION		CF3R-MCH-20-H
Duct Leakage Diagnostic Test		(Page 1 of 3)
Project Name:	Enforcement Agency:	Permit Number:
Dwelling Address:	City	Zip Code

A. System Information		
01	HVAC System Identification or Name:	
02	HVAC System Location or Area Served:	
03	Building Type from CF1R	
04	Verified Low Leakage Ducts in Conditioned Space (VLLDCS)	
05	Verified Low Leakage Air-handling Unit	
06	Duct System Compliance Category:	

B. Duct Leakage Diagnostic Test - MCH-20c - Low Leakage Air-Handling Unit (LLAHU)		
01	Condenser Nominal Cooling Capacity (ton)	
02	Heating Capacity (kBtu/h)	
03	Conditioned Floor Area Served by this HVAC System (ft2)	
04	Duct Leakage Test Conditions	
05	Duct Leakage Test Method?	
06	LeakageFactor ( )	
07	Air-Handling Unit Airflow (AHUAirflow) Determination Method	
08	Measured AHUAirflow (cfm)	
09	Calculated Target Allowable Duct Leakage Rate (cfm)	
10	Actual duct leakage rate from leakage test measurement (cfm)	
11	Air-Handling Unit Manufacturer Name	
12	Air-Handling Unit Model Number	
13	Compliance statement:	
14	Notes:	

For information and data collection only. Not valid until registered with a HERS provider

CERTIFICATE OF VERIFICATION		CF3R-MCH-20-H
Duct Leakage Diagnostic Test		(Page 2 of 3)
Project Name:	Enforcement Agency:	Permit Number:
Dwelling Address:	City	Zip Code

C. ADDITIONAL REQUIREMENTS FOR COMPLIANCE	
The responsible persons signature on this document indicates the installation complies with the following requirements:	
01	**The Low Leakage Air-handling Unit Model identified on this compliance document is included in the list of certified Low Leakage Air-Handling Units published on the Energy Commission Website at:** http://www.energy.ca.gov/title24/2008standards/special_case_appliance/supplemental_listings/Low_Leakage_Air-Handling_Unit_Listing_2012-10-30.pdf (provide updated link).
02	System was tested in its normal operation condition. No temporary taping allowed.
03	Outside air (OA) ducts for Central Fan Integrated (CFI) ventilation systems, shall not be sealed/taped off during duct leakage testing. CFI OA ducts that utilize controlled motorized dampers, that open only when OA ventilation is required to meet ASHRAE Standard 62.2, and close when OA ventilation is not required, may be configured to the closed position during duct leakage testing.
04	All supply and return register boots were sealed to the drywall.
05	Building cavities were not used as plenums or platform returns in lieu of ducts.
06	If cloth backed tape was used it was covered with Mastic and draw bands.
07	All connection points between the air handler and the supply and return plenums are completely sealed.
08	Verification Status
If Verification Status for this table indicates "Fail", the reason shall be described in the correction notes for this table.	
Correction Notes for this table:	
The responsible person's signature on this document indicates that the installation meets these requirements specified in Table C.	

For information and data collection only. Not valid until registered with a HERS provider

CERTIFICATE OF VERIFICATION		CF3R-MCH-20-H
Duct Leakage Diagnostic Test		(Page 3 of 3)
Project Name:	Enforcement Agency:	Permit Number:
Dwelling Address:	City	Zip Code

DOCUMENTATION AUTHOR'S DECLARATION STATEMENT

1. I certify that this Certificate of Verification documentation is accurate and complete.

Documentation Author Name:	Documentation Author Signature:
Company:	Date Signed:
Address:	CEA/HERS Certification Information (if applicable):
City/State/Zip:	Phone:

RESPONSIBLE PERSON'S DECLARATION STATEMENT

I certify the following under penalty of perjury, under the laws of the State of California:

1. The information provided on this Certificate of Verification is true and correct.
2. I am the certified HERS Rater who performed the verification identified and reported on this Certificate of Verification (responsible rater).
3. The installed features, materials, components, manufactured devices, or system performance diagnostic results that require HERS verification identified on this Certificate of Verification comply with the applicable requirements in Reference Appendices RA2, RA3, and the requirements specified on the Certificate of Compliance for the building approved by the enforcement agency.
4. The information reported on applicable sections of the Certificate(s) of Installation (CF2R) signed and submitted by the person(s) responsible for the construction or installation conforms to the requirements specified on the Certificate(s) of Compliance (CF1R) approved by the enforcement agency.
5. I will ensure that a registered copy of this Certificate of Verification shall be posted, or made available with the building permit(s) issued for the building, and made available to the enforcement agency for all applicable inspections. I understand that a registered copy of this Certificate of Verification is required to be included with the documentation the builder provides to the building owner at occupancy.

BUILDER OR INSTALLER INFORMATION AS SHOWN ON THE CERTIFICATE OF INSTALLATION

Company Name (Installing Subcontractor, General Contractor, or Builder/Owner):	
Responsible Builder or Installer Name:	CSLB License:

HERS PROVIDER DATA REGISTRY INFORMATION

Sample Group Number (if applicable):	Dwelling Test Status in Sample Group (if applicable)

HERS RATER INFORMATION

HERS Rater Company Name:	
Responsible Rater Name:	Responsible Rater Signature:
Responsible Rater Certification Number w/ this HERS Provider	Date Signed:

For information and data collection only. Not valid until registered with a HERS provider

A. System Information

01. *HVAC System Identification or Name*: Same data given on CF2R-MCH-20; provides an identification name or tag name that uniquely identifies the duct system. If there is a mechanical plan for the system, the tag name may be given on the plans.
02. *HVAC System Location or Area Served*: Same data given on CF2R-MCH-20; provides a brief description of the area served by the duct system (e.g. upstairs; downstairs).
03. *Building Type*: Same data given on CF2R-MCH-20.
04. *Verified Low Leakage Ducts in Conditioned Space (VLLDCS)*: Same data given on CF2R-MCH-20; Details whether or not VLLDCS is required per CF1R.
05. *Verified Low Leakage Air-handling Unit (VLLAHU)*: Same data given on CF2R-MCH-20; Details whether or not VLLAHU is required per CF1R.
06. *Duct System Compliance Category*: Same data given on CF2R-MCH-20

B. Duct Leakage Diagnostic Test - MCH-20c - Low Leakage Air-Handling Unit (LLAHU)

01. *Condenser Nominal Cooling Capacity (ton)*: Enter the condenser nominal cooling capacity in tons, data may be found on the manufacturer documentation.
02. *Heating Capacity (kBtu/h)*: Enter the heating capacity in kBtu/h, data may be found on the manufacturer documentation.
03. *Conditioned Floor Area Served by this HVAC System (ft2)*: User will input CFA for zone which should be consistent with the value from the CF2R-MCH-20. User will have the option to leave this field blank because the zone CFA is only required for the default airflow calculation.
04. *Duct Leakage Test Conditions*: Same data given on CF2R-MCH-20.
05. *Duct Leakage Test Method*: Same data given on CF2R-MCH-20.
06. *Leakage Factor*: Same data given on CF2R-MCH-20.
07. *Air-Handling Unit Airflow (AHUAirflow) Determination Method*: Same data given on CF2R-MCH-20.
08. *Measured AHUAirflow (cfm)*: If "Measured Airflow Method" is selected in row B07, user must input measured airflow.
09. *Calculated Target Allowable Duct Leakage Rate (cfm)*: This value will be automatically populated depending on values in B06, B07, and B08.
10. *Actual Duct Leakage Rate from Leakage Test Measurement (cfm)*: User will input this value from actual measurements from leakage test.
11. *Air-Handling Unit Manufacturer Name*: Enter the manufacturer name of the air handling unit installed.
12. *Air-Handling Unit Model Number*: Enter the model number of the air handling unit installed.
13. *Compliance Statement*: If Actual Duct Leakage Rate from leakage test (B10) is less than or equal to Calculated Target Allowable Duct Leakage Rate (B09), "System passes leakage test" will automatically populate. If not, "System fails leakage test will automatically populate.
14. *Notes:* If the installed cooling or heating capacities or CFA of the area served by the HVAC system does not match the Installation Certificate, then a note indicating the discrepancy will be displayed. Also, if the manufacturer name or model number of the air handling unit does not match the Installation Certificate, then a note indicating the discrepancy will be displayed.

C. Additional Requirements for Compliance

08. *Verification Status: Select from the pull down list either "Pass" or "Fail", indicating if the installation meets the additional requirements of Table C.*

Correction Notes for this Table: If the installation fails to comply with these additional requirements, the correction must be specified.

For information and data collection only. Not valid until registered with a HERS provider

DUCT LEAKAGE DIAGNOSTIC TEST

CERTIFICATE OF VERIFICATION		CF3R-MCH-20-H
Duct Leakage Diagnostic Test		(Page 1 of 3)
Project Name:	Enforcement Agency:	Permit Number:
Dwelling Address:	City	Zip Code

A. System Information		
01	HVAC System Identification or Name:	
02	HVAC System Location or Area Served:	
03	Building Type from CF1R	
04	Verified Low Leakage Ducts in Conditioned Space (VLLDCS)	
05	Verified Low Leakage Air-handling Unit	
06	Duct System Compliance Category:	

B. Duct Leakage Diagnostic Test - MCH-20d - Complete Replacement or Altered Duct System		
01	Condenser Nominal Cooling Capacity (ton)	
02	Heating Capacity (kBtu/h)	
03	Conditioned Floor Area Served by this HVAC System (ft2)	
04	Duct Leakage Test Conditions	
05	Duct Leakage Test Method?	
06	LeakageFactor ( )	
07	Air-Handler Unit Airflow (AHUAirflow) Determination Method	
08	Measured AHUAirflow (cfm)	
09	Calculated Target Allowable Duct Leakage Rate (cfm)	
10	Actual duct leakage rate from leakage test measurement (cfm)	
11	Compliance statement:	
12	Notes	

For information and data collection only. Not valid until registered with a HERS provider

CERTIFICATE OF VERIFICATION		CF3R-MCH-20-H
Duct Leakage Diagnostic Test		(Page 2 of 3)
Project Name:	Enforcement Agency:	Permit Number:
Dwelling Address:	City	Zip Code

C. ADDITIONAL REQUIREMENTS FOR COMPLIANCE	
The responsible persons signature on this document indicates the installation complies with the following requirements:	
01	System was tested in its normal operation condition. No temporary taping allowed.
02	Outside air (OA) ducts for Central Fan Integrated (CFI) ventilation systems, shall not be sealed/taped off during duct leakage testing. CFI OA ducts that utilize controlled motorized dampers, that open only when OA ventilation is required to meet ASHRAE Standard 62.2, and close when OA ventilation is not required, may be configured to the closed position during duct leakage testing.
03	All supply and return register boots were sealed to the drywall.
04	Building cavities were not used as plenums or platform returns in lieu of ducts.
05	If cloth backed tape was used it was covered with Mastic and draw bands.
06	All connection points between the air handler and the supply and return plenums are completely sealed.
07	If the system complies using the Smoke Test method, the smoke test was conducted in accordance with the requirements of Reference Residential Appendix RA3.1.4.3.6. Systems that comply using smoke test shall not be included in sample groups for HERS verification compliance.
08	Verification Status
If Verification Status for this table indicates "Fail", the reason shall be described in the correction notes for this table.	
Correction Notes for this table:	
The responsible person's signature on this document indicates that the installation meets these requirements specified in Table C.	

For information and data collection only. Not valid until registered with a HERS provider

CERTIFICATE OF VERIFICATION		CF3R-MCH-20-H
Duct Leakage Diagnostic Test		(Page 3 of 3)
Project Name:	Enforcement Agency:	Permit Number:
Dwelling Address:	City	Zip Code

DOCUMENTATION AUTHOR'S DECLARATION STATEMENT	
1. I certify that this Certificate of Verification documentation is accurate and complete.	
Documentation Author Name:	Documentation Author Signature:
Company:	Date Signed:
Address:	CEA/HERS Certification Information (if applicable):
City/State/Zip:	Phone:

RESPONSIBLE PERSON'S DECLARATION STATEMENT

I certify the following under penalty of perjury, under the laws of the State of California:

1. The information provided on this Certificate of Verification is true and correct.
2. I am the certified HERS Rater who performed the verification identified and reported on this Certificate of Verification (responsible rater).
3. The installed features, materials, components, manufactured devices, or system performance diagnostic results that require HERS verification identified on this Certificate of Verification comply with the applicable requirements in Reference Appendices RA2, RA3, and the requirements specified on the Certificate of Compliance for the building approved by the enforcement agency.
4. The information reported on applicable sections of the Certificate(s) of Installation (CF2R) signed and submitted by the person(s) responsible for the construction or installation conforms to the requirements specified on the Certificate(s) of Compliance (CF1R) approved by the enforcement agency.
5. I will ensure that a registered copy of this Certificate of Verification shall be posted, or made available with the building permit(s) issued for the building, and made available to the enforcement agency for all applicable inspections. I understand that a registered copy of this Certificate of Verification is required to be included with the documentation the builder provides to the building owner at occupancy.

BUILDER OR INSTALLER INFORMATION AS SHOWN ON THE CERTIFICATE OF INSTALLATION	
Company Name (Installing Subcontractor, General Contractor, or Builder/Owner):	
Responsible Builder or Installer Name:	CSLB License:

HERS PROVIDER DATA REGISTRY INFORMATION	
Sample Group Number (if applicable):	Dwelling Test Status in Sample Group (if applicable)

HERS RATER INFORMATION	
HERS Rater Company Name:	
Responsible Rater Name:	Responsible Rater Signature:
Responsible Rater Certification Number w/ this HERS Provider	Date Signed:

For information and data collection only. Not valid until registered with a HERS provider

CF-3R-MCH-20-HERS Instructions

A. System Information

01. *HVAC System Identification or Name*: Same data given on CF2R-MCH-20; provides an identification name or tag name that uniquely identifies the duct system. If there is a mechanical plan for the system, the tag name may be given on the plans.
02. *HVAC System Location or Area Served*: Same data given on CF2R-MCH-20; provides a brief description of the area served by the duct system (e.g. upstairs; downstairs).
03. *Building Type*: Same data given on CF2R-MCH-20.
04. *Verified Low Leakage Ducts in Conditioned Space (VLLDCS)*: Same data given on CF2R-MCH-20; Details whether or not VLLDCS is required per CF1R.
05. *Verified Low Leakage Air-handling Unit (VLLAHU)*: Same data given on CF2R-MCH-20; Details whether or not VLLAHU is required per CF1R.
06. *Duct System Compliance Category*: Same data given on CF2R-MCH-20

B. Duct Leakage Diagnostic Test - MCH-20d - Complete Replacement or Altered Duct System

01. *Condenser Nominal Cooling Capacity (ton)*: Enter the installed condenser nominal cooling capacity in tons.
02. *Heating Capacity (kBtu/h)*: Enter the installed heating capacity in kBtu/h.
03. *Conditioned Floor Area Served by this HVAC System(ft^2)*: User must input CFA for the space. Should be consistent with the data given on CF2R-MCH-20.
04. *Duct Leakage Test Conditions*: Same data given on CF2R-MCH-20.
05. *Duct Leakage Test Method*: Same data given on CF2R-MCH-20.
06. *Leakage Factor*: Same data given on CF2R-MCH-20.
07. *Air-Handling Unit Airflow (AHUAirflow) Determination Method*: Same data given on CF2R-MCH-20.
08. *Measured AHU Airflow (CFM)*: If "Measured Airflow Method" is selected in row B07, user must input measured airflow.
09. *Calculated Target Allowable Duct Leakage Rate (cfm)*: This value will be automatically populated depending on values in B6, B7, and B8.
10. *Actual Duct Leakage Rate from Leakage Test Measurement (cfm)*: User will input this value from actual measurements from leakage test.
11. *Compliance Statement*: If Actual Duct Leakage Rate from leakage test (B10) is less than or equal to Calculated Target Allowable Duct Leakage Rate, "System passes leakage test" will automatically populate. If not, "System fails leakage test" will automatically populate.
12. *Notes*: If the installed cooling or heating capacities or CFA of the area served by the HVAC system does not match the Installation Certificate, then a note indicating the discrepancy will be displayed.

C. Additional Requirements for Compliance

08. Verification Status: Select from the pull down list either "Pass" or "Fail", indicating if the installation meets the additional requirements of Table C.

Correction Notes for this Table: If the installation fails to comply with these additional requirements, the correction must be specified.

For information and data collection only. Not valid until registered with a HERS provider

DUCT LEAKAGE DIAGNOSTIC TEST

CERTIFICATE OF VERIFICATION		CF3R-MCH-20-H
Duct Leakage Diagnostic Test		(Page 1 of 3)
Project Name:	Enforcement Agency:	Permit Number:
Dwelling Address:	City	Zip Code

A. System Information		
01	HVAC System Identification or Name:	
02	HVAC System Location or Area Served:	
03	Building Type from CF1R	
04	Verified Low Leakage Ducts in Conditioned Space (VLLDCS)	
05	Verified Low Leakage Air-handling Unit	
06	Duct System Compliance Category:	

B. Duct Leakage Diagnostic Test - MCH-20e - Sealing All Accessible Leaks using Smoke Test		
01	Condenser Nominal Cooling Capacity (ton)	
02	Heating Capacity (kBtu/h)	
03	Conditioned Floor Area Served by this HVAC System (ft2)	
04	Duct Leakage Test Conditions	
05	Duct Leakage Test Method	
06	LeakageFactor ( )	
07	Air-Handling Unit Airflow (AHUAirflow) Determination Method	
08	Measured AHUAirflow (cfm)	
09	Calculated Target Allowable Duct Leakage Rate (cfm)	
10	Actual duct leakage rate from leakage test measurement (cfm)	
11	Compliance statement:	
12	Notes	

For information and data collection only. Not valid until registered with a HERS provider

CERTIFICATE OF VERIFICATION		CF3R-MCH-20-H
Duct Leakage Diagnostic Test		(Page 2 of 3)
Project Name:	Enforcement Agency:	Permit Number:
Dwelling Address:	City	Zip Code

C. ADDITIONAL REQUIREMENTS FOR COMPLIANCE	
The responsible persons signature on this document indicates the installation complies with the following requirements:	
01	System was tested in its normal operation condition. No temporary taping allowed.
02	Outside air (OA) ducts for Central Fan Integrated (CFI) ventilation systems, shall not be sealed/taped off during duct leakage testing. CFI OA ducts that utilize controlled motorized dampers, that open only when OA ventilation is required to meet ASHRAE Standard 62.2, and close when OA ventilation is not required, may be configured to the closed position during duct leakage testing.
03	All supply and return register boots were sealed to the drywall.
04	Building cavities were not used as plenums or platform returns in lieu of ducts.
05	If cloth backed tape was used it was covered with Mastic and draw bands.
06	All connection points between the air handler and the supply and return plenums are completely sealed.
07	If the system complies using the Smoke Test method, the smoke test was conducted in accordance with the requirements of Reference Residential Appendix RA3.1.4.3.6. Systems that comply using smoke test shall not be included in sample groups for HERS verification compliance.
08	Verification Status
If Verification Status for this table indicates "Fail", the reason shall be described in the correction notes for this table.	
Correction Notes for this table:	
The responsible person's signature on this document indicates that the installation meets these requirements specified in Table C.	

For information and data collection only. Not valid until registered with a HERS provider

CERTIFICATE OF VERIFICATION		CF3R-MCH-20-H
Duct Leakage Diagnostic Test		(Page 3 of 3)
Project Name:	Enforcement Agency:	Permit Number:
Dwelling Address:	City	Zip Code

DOCUMENTATION AUTHOR'S DECLARATION STATEMENT	
1. I certify that this Certificate of Verification documentation is accurate and complete.	
Documentation Author Name:	Documentation Author Signature:
Company:	Date Signed:
Address:	CEA/HERS Certification Information (if applicable):
City/State/Zip:	Phone:

RESPONSIBLE PERSON'S DECLARATION STATEMENT

I certify the following under penalty of perjury, under the laws of the State of California:

1. The information provided on this Certificate of Verification is true and correct.
2. I am the certified HERS Rater who performed the verification identified and reported on this Certificate of Verification (responsible rater).
3. The installed features, materials, components, manufactured devices, or system performance diagnostic results that require HERS verification identified on this Certificate of Verification comply with the applicable requirements in Reference Appendices RA2, RA3, and the requirements specified on the Certificate of Compliance for the building approved by the enforcement agency.
4. The information reported on applicable sections of the Certificate(s) of Installation (CF2R) signed and submitted by the person(s) responsible for the construction or installation conforms to the requirements specified on the Certificate(s) of Compliance (CF1R) approved by the enforcement agency.
5. I will ensure that a registered copy of this Certificate of Verification shall be posted, or made available with the building permit(s) issued for the building, and made available to the enforcement agency for all applicable inspections. I understand that a registered copy of this Certificate of Verification is required to be included with the documentation the builder provides to the building owner at occupancy.

BUILDER OR INSTALLER INFORMATION AS SHOWN ON THE CERTIFICATE OF INSTALLATION	
Company Name (Installing Subcontractor, General Contractor, or Builder/Owner):	
Responsible Builder or Installer Name:	CSLB License:
HERS PROVIDER DATA REGISTRY INFORMATION	
Sample Group Number (if applicable):	Dwelling Test Status in Sample Group (if applicable)
HERS RATER INFORMATION	
HERS Rater Company Name:	
Responsible Rater Name:	Responsible Rater Signature:
Responsible Rater Certification Number w/ this HERS Provider	Date Signed:

For information and data collection only. Not valid until registered with a HERS provider

CF3R-MCH-20-HERS Instructions

A. System Information

01. *HVAC System Identification or Name*: Same data given on CF2R-MCH-20; provides an identification name or tag name that uniquely identifies the duct system. If there is a mechanical plan for the system, the tag name may be given on the plans.
02. *HVAC System Location or Area Served*: Same data given on CF2R-MCH-20; provides a brief description of the area served by the duct system (e.g. upstairs; downstairs).
03. *Building Type*: Same data given on CF2R-MCH-20.
04. *Verified Low Leakage Ducts in Conditioned Space (VLLDCS)*: Same data given on CF2R-MCH-20; Details whether or not VLLDCS is required per CF1R.
05. *Verified Low Leakage Air-handling Unit (VLLAHU)*: Same data given on CF2R-MCH-20; Details whether or not VLLAHU is required per CF1R.
06. *Duct System Compliance Category*: Same data given on CF2R-MCH-20

B. Duct Leakage Diagnostic Test - MCH-20e - Sealing All Accessible Leaks using Smoke Test

01. *Condenser Nominal Cooling Capacity (ton)*: Enter the installed condenser nominal cooling capacity in tons.
02. *Heating Capacity (kBtu/h)*: Enter the installed heating capacity in kBtu/h.
03. *Conditioned Floor Area Served by this HVAC System(ft^2)*: User must input CFA for the space. Should be consistent with the data given on CF2R-MCH-20.
04. *Duct Leakage Test Conditions*: Same data given on CF2R-MCH-20.
05. *Duct Leakage Test Method*: Same data given on CF2R-MCH-20.
06. *Leakage Factor*: Same data given on CF2R-MCH-20.
07. *Air-Handling Unit Airflow (AHUAirflow) Determination Method*: Same data given on CF2R-MCH-20.
08. *Measured AHU Airflow (CFM)*: If "Measured Airflow Method" is selected in row B07, user must input measured airflow.
09. *Calculated Target Allowable Duct Leakage Rate (cfm)*: This value will be automatically populated depending on values in B6, B7, and B8.
10. *Actual Duct Leakage Rate from Leakage Test Measurement (cfm)*: User will input this value from actual measurements from leakage test.
11. *Compliance Statement*: If Actual Duct Leakage Rate from leakage test (B10) is less than or equal to Calculated Target Allowable Duct Leakage Rate, "System passes leakage test" will automatically populate. If not, "System fails leakage test" will automatically populate.
12. *Notes*: If the installed cooling or heating capacities or CFA of the area served by the HVAC system does not match the Installation Certificate, then a note indicating the discrepancy will be displayed.

C. Additional Requirements for Compliance

08. Verification Status: Select from the pull down list either "Pass" or "Fail", indicating if the installation meets the additional requirements of Table C.

Correction Notes for this Table: If the installation fails to comply with these additional requirements, the correction must be specified.

For information and data collection only. Not valid until registered with a HERS provider

A. System Information

HERS Rater to field-verify all system information, discrepancies to be noted by overwriting entry.

01	System Identification or Name	
02	System Location or Area Served	
03	Condenser (or package unit) make or brand	
04	Condenser (or package unit) model number	
05	Nominal Cooling Capacity (tons) of Condenser	
06	Condenser (or package unit) serial number	
07	Refrigerant Type	
08	Other Refrigerant Type (if applicable)	
09	Project Type	
10	Charge Indicator Display (CID) Status (Note: Even systems with a CID must have refrigerant charge verified by installer)	
11	Is the system of a type that the minimum airflow can be verified using an approved measurement procedure (RA3.3 or RA3.2.2.7)?	
12	Is the system of a type that approved refrigerant charge verification procedures can be used to verify compliance with the refrigerant charge verification requirements when temperatures are ≥ 55°F (RA3.2.2, or RA1)?	
13	Date of HERS Rater Refrigerant Charge Verification for this system	
14	Refrigerant charge verification method used by installer.	
15	Person who performed the Refrigerant Charge Verification reported on the Certificate of Installation:	
16	HERS Verification Compliance Requirement Status	
	Generate list for next row (this is hidden from user)	
17	Refrigerant charge verification method used by HERS Rater.	
18	determine compliance method for this document; display applicable tables below; (this row not visible to user)	

Standard Charge Verification Procedure – CF3R-MCH-25a - Superheat Method

B. Metering Device Verification – HERS Rater is required to visually field verify all information from CF2R Superheat Method can only be used on systems that do not have a variable metering device.		
01	Refrigerant metering device	
02	Superheat Method applicability status	

C. Instrument Calibration – HERS Raters are required to calibrate their diagnostic tools. Procedures for instrument calibration are given in Reference Residential Appendix RA3.2.2 and RA3.2.2.2		
01	Date of Digital Refrigerant Gauge Calibration	
02	Date of Digital Thermocouple Calibration	
03	Digital Refrigerant Gauge Calibration Status	
04	Digital Thermocouple Calibration Status	

D. Measurement Access Hole (MAH) Verification – HERS Raters are required to visually field verify MAH *Procedures for installing MAH are specified in Reference Residential Appendix RA3.2.2.3*		
01	Method used to demonstrate compliance with the Measurement Access Hole (MAH) requirement	•

E. Minimum System Airflow Rate Verification *Procedures for verifying minimum system airflow are specified in Reference Residential Appendix RA3.2.2.7.*		
01	Minimum Required System Airflow Rate (cfm)	
02	System Airflow Rate Verification Status	

F. Data Collection – HERS Rater must independently collect all data in this section.

Procedures for determining Refrigerant Charge using the Standard Charge Verification Procedure are given in Reference Residential Appendix RA3.2.2 and RA3.2.2.2

01	Lowest return air dry bulb temperature that occurred during the refrigerant charge verification procedure (degreeF)	
02	Measured Condenser air entering dry-bulb temperature ($T_{condenser, db}$) (degreeF)	
03	Outdoor Temperature Qualification Status	
04	Measured Return (evaporator entering) air dry-bulb temperature ($T_{return, db}$) (degreeF)	
05	Measured Return (evaporator entering) air wet-bulb temperature ($T_{return, wb}$) (degreeF)	
06	Measured Suction line temperature ($T_{suction}$) (degreeF)	
07	Measured Suction line pressure ($P_{suction}$ - psig)	
08	Evaporator saturation temperature ($T_{evaporator, sat}$) from digital gauge or P-T Table using Line F07 (degreeF)	
09	Measured Superheat (Line F06 – Line F08) (degreeF)	
10	Target Superheat (from Table RA3.2-2, using F02 and F05) (degreeF)	
11	Compliance Statement:	

Project Name:	Enforcement Agency:	Permit Number:
Dwelling Address:	City	Zip Code

DOCUMENTATION AUTHOR'S DECLARATION STATEMENT

1. I certify that this Certificate of Verification documentation is accurate and complete.

Documentation Author Name:	Documentation Author Signature:
Company:	Date Signed:
Address:	CEA/HERS Certification Information (if applicable):
City/State/Zip:	Phone:

RESPONSIBLE PERSON'S DECLARATION STATEMENT

I certify the following under penalty of perjury, under the laws of the State of California:

1. The information provided on this Certificate of Verification is true and correct.
2. I am the certified HERS Rater who performed the verification identified and reported on this Certificate of Verification (responsible rater).
3. The installed features, materials, components, manufactured devices, or system performance diagnostic results that require HERS verification identified on this Certificate of Verification comply with the applicable requirements in Reference Appendices RA2, RA3, and the requirements specified on the Certificate of Compliance for the building approved by the enforcement agency.
4. The information reported on applicable sections of the Certificate(s) of Installation (CF2R) signed and submitted by the person(s) responsible for the construction or installation conforms to the requirements specified on the Certificate(s) of Compliance (CF1R) approved by the enforcement agency.
5. I will ensure that a registered copy of this Certificate of Verification shall be posted, or made available with the building permit(s) issued for the building, and made available to the enforcement agency for all applicable inspections. I understand that a registered copy of this Certificate of Verification is required to be included with the documentation the builder provides to the building owner at occupancy.

BUILDER OR INSTALLER INFORMATION AS SHOWN ON THE CERTIFICATE OF INSTALLATION

Company Name (Installing Subcontractor, General Contractor, or Builder/Owner):	
Responsible Builder or Installer Name:	CSLB License:

HERS PROVIDER DATA REGISTRY INFORMATION

Sample Group Number (if applicable):	Dwelling Test Status in Sample Group (if applicable)

HERS RATER INFORMATION

HERS Rater Company Name:	
Responsible Rater Name:	Responsible Rater Signature:
Responsible Rater Certification Number w/ this HERS Provider	Date Signed:

Instructions MCH-25a:

Section A. System Information

1. This information is automatically pulled from the Certificate of Installation (CF2R-MCH-25). If installed system does not match this entry, it can be overwritten by rater but it will be flagged as a possible fail.
2. This information is automatically pulled from the Certificate of Installation (CF2R-MCH-25) If installed system does not match this entry, it can be overwritten by rater but it will be flagged as a possible fail.
3. This information is automatically pulled from the Certificate of Installation (CF2R-MCH-25). If installed system does not match this entry, it can be overwritten by rater but it will be flagged as a possible fail.
4. This information is automatically pulled from the Certificate of Installation (CF2R-MCH-25) If installed system does not match this entry, it can be overwritten by rater but it will be flagged as a possible fail.
5. This information is automatically pulled from the Certificate of Installation (CF2R-MCH-25). If installed system does not match this entry, it can be overwritten by rater but it will be flagged as a possible fail.
6. This information is automatically pulled from the Certificate of Installation (CF2R-MCH-25) If installed system does not match this entry, it can be overwritten by rater but it will be flagged as a possible fail.
7. This information is automatically pulled from the Certificate of Installation (CF2R-MCH-25) If installed system does not match this entry, it can be overwritten by rater but it will be flagged as a possible fail.
8. This information is automatically pulled from the Certificate of Installation (CF2R-MCH-25). If "Other" is chosen in Row A07, then installer will indicate the type of refrigerant being used. If R-22 or R-410A is being used (regardless of trade name, Puron, Genetron, etc.) it should be indicated in Row A07, not here. This row is only for refrigerants other than R-22 and R-410a. Documentation of other refrigerants should be requested. If installed system does not match this entry, it can be overwritten by rater but it will be flagged as a possible fail.
9. This information is automatically pulled from the Certificate of Installation (CF2R-MCH-25). These are defined in detail the Residential Compliance Manual. If installed system does not match this entry, it can be overwritten by rater but it will be flagged as a possible fail.
10. This information is automatically pulled from the Certificate of Installation (CF2R-MCH-25). Installer is to select the appropriate choice regarding whether this system has a Charge Indicator Display (CID). Qualifying CID's may exempt a system from HERS refrigerant charge verification. CID's are described in Joint Appendix JA6.1. Qualfying CID's must appear on a list of approved devices kept by the Commission. If installed system does not match the description here, it fails.
11. This information is automatically pulled from the Certificate of Installation (CF2R-MCH-25). Most ducted split systems and package systems are of the type that minimum airflow can be verified using an approved measurement procedure. Examples of systems that do not meet this description are ductless systems. Selecting "No" here may subject the project to additional scrutiny by enforcement personnel.
12. This information is automatically pulled from the Certificate of Installation (CF2R-MCH-25) Most ducted split systems and package systems are of the type that approved refrigerant charge verification procedures detailed in Residential Appendix RA3.2.2 or RA1 can be used (i.e., Standard Charge Verification or Winter Setup Verification procedures). Examples of systems that may not meet this description are "mini splits" or variable refrigerant flow systems that may only be charged using weigh-in procedures. Selecting "No" here may subject the project to additional scrutiny.
13. HERS rater to input date of refrigerant charge verification.

14. This information is automatically pulled from the Certificate of Installation (CF2R-MCH-25). The installer is to have select the refrigerant charge verification method used from the choices provided:
    - Superheat (outdoor temperature must be ≥ 55 degF); This verification method can only be used when the outdoor temperature is at or above 55 degF. It is only used on systems with fixed orifice refrigerant metering devices (non-variable metering devices). This method is detailed in Reference Appendix RA3.2.2.6.1. Systems verified using this method may be eligible for HERS verification compliance using sampling. Choosing this option will generate a CF2R-MCH-25a.
    - Subcooling (outdoor temperature must be ≥ 55 degF); This verification method can only be used when the outdoor temperature is at or above 55 degF. It is only used on systems with variable metering devices (TXV or EXV). This method is detailed in Reference Appendix RA3.2.2.6.2. Systems verified using this method may be eligible for HERS verification compliance using sampling. Choosing this option will generate a CF2R-MCH-25b.
    - Weigh-in; This verification method can be used at any outdoor temperature allowed by the equipment manufacturer. This method is detailed in Reference Appendix RA3.2.3. Systems verified using this method are NOT eligible for HERS verification compliance using Group Sampling. Choosing this option will generate a CF2R-MCH-25c.
    - Winter Setup (applicable when outdoor temperature is < 55 degF); The Winter Setup verification method is a special version of the Subcooling method. It can be used when the outdoor temperature is between 37 and 55 degF. It can only be used on equipment where the manufacturer has specifically approved it for the equipment being tested. The Winter Setup procedure is details in Residential Appendix RA1.2. Choosing this option will generate a CF2R-MCH-25e.
    - New Package Unit Factory Charge; Choose this option when a new package unit is being installed that has an AHRI rating. This helps ensure that the unit was properly charged at the factory. HERS verification of refrigerant charge may not be required in this case. Choosing this option will generate a CF2R-MCH-25f.
15. This information is automatically pulled from the Certificate of Installation (CF2R-MCH-25). The installer (or rater) is to have identified who performed the verification that is documented on the Certificate of Installation. Note that HERS verification compliance by Group Sampling requires that the installer perform their own refrigerant charge verification as part of the installation of the equipment prior to the system being put into a sample group for possible selection by a HERS rater for verification. If Group Sampling is not intended, the HERS Rater may perform the refrigerant charge verification on behalf of the Installing Contractor (applies to any method but Weigh-In) and the Rater will enter same results on both the CF2R and CF3R.
16. This information is automatically pulled from the Certificate of Installation (CF2R-MCH-25). The Group Sampling status is automatically displayed based on the input results of Row A14 and Row A15 on the CF2R. Group Sampling procedures are detailed Residential Appendix RA2.3.
17. Specify the refrigerant charge verification used by the rater. Choices vary depending on what method was specified in Row A14.

Section B. Metering Device Verification

1. This information is automatically pulled from the Certificate of Installation (CF2R-MCH-25). Installer is to have selected the correct metering device used on the system being verified. This will check against

the refrigerant charge verification method selected in Row A14. An error message will appear in Row B02 if the wrong verification method may has been selected. Superheat verification can only be used on systems with fixed orifice and Subcool verification can only be used on systems with variable metering devices (TXV or EXV). This entry must match installed system to pass.

2. This information is automatically pulled from the Certificate of Installation (CF2R-MCH-25). Superheat verification can only be used on systems with fixed orifice and Subcool verification can only be used on systems with variable metering devices (TXV or EXV).

Section C. Instrument Calibration

1. Enter the date of most recent Digital Refrigerant Gauge Calibration Field Check by rater. Analog gauges are not allowed for verification purposes under the 2013 Standards. Specification for pressure gauges is found in Residential Appendix RA3.2.2.2.3. Procedures for the field check procedure are detailed in RA3.2.2.4.2. Calibration field check must happen at least once every 30 days.
2. Enter the date of the most recent Digital Thermocouple Calibration by rater. Specifications for thermocouples and temperature sensors can be found in Residential Appendix RA3.2.2.2.2. Procedures for calibration are detailed in RA3.2.2.4.1. Calibration must happen at least once every 30 days.
3. Digital Refrigerant Gauge Calibration status will appear automatically. If the date entered in Row C01 is more than 30 days prior to date of verification this row will indicate that calibration is required and you will not be allowed to continue filling out this document.
4. Digital Thermocouple Calibration status will appear automatically. If the date entered in Row C02 is more than 30 days prior to date of verification this row will indicate that calibration is required and you will not be allowed to continue filling out this document.

Section D. Measurement Access Hole (MAH) Verification

1. This information is automatically pulled from the Certificate of Installation (CF2R-MCH-25). Installer is to have indicated the method used to demonstrate compliance with the MAH requirement by selecting the appropriate method from the drop down list. Procedures for installing MAH's are detailed in RA3.2.2.3. Selecting that the MAH cannot be installed consistent with Figure 3.2-1 may result in additional scrutiny by enforcement personnel.) If installed system does not match this entry, it can be overwritten by rater but it will be flagged as a possible fail.

Section E. Minimum System Airflow Rate Verification

1. This information is automatically calculated based on the information given in line A09. This is the target minimum system airflow required for the system being verified.
2. This information is automatically calculated based on either the CF3R-MCH-23, or CF3R-MCH-24, which documents the rater's measured airflow of the system being verified. If the measured airflow is not adequate it will not comply with the airflow requirements and refrigerant charge verification cannot be performed.

Section F. Superheat Charge Verification Method – Data Collection

1. The Rater must independently collect this data. Measure and record the lowest return air dry-bulb temperature that occurred during the refrigerant charge procedure in degrees F. This temperature must remain above 70 degF during the verification procedure. This requirement is detailed in Residential Appendix RA3.2.2.5.
2. The Rater must independently collect this data. Measure and record the condenser air dry-bulb temperature ($T_{condenser}$) in degrees F. This value is used to determine the target superheat from table RA3.2-2. This value must be at least 55 degF and no more than 115 degF to use the Superheat Charge Verification Method.
3. If a value less than 55 degF or greater than 115 degF is entered in Row F02 the Superheat Method cannot be used.
4. The Rater must independently collect this data. Measure and record the return air dry-bulb temperature ($T_{return,db}$) in degrees F. This measurement is taken at the MAH (or alternate location specified in Row F01. This procedure is detailed in RA3.2.2.5.
5. The Rater must independently collect this data. Measure and record the return air wet-bulb temperature ($T_{return,wb}$) in degrees F. This measurement is taken at the MAH (or alternate location specified in Row F01. This procedure is detailed in RA3.2.2.5. This value is used to determine the target superheat from table RA3.2-2.
6. The Rater must independently collect this data. Measure and record the suction line temperature ($T_{suction}$) in degrees F. This procedure is detailed in RA3.2.2.5. This value is used to calculate the measured superheat.
7. The Rater must independently report this data. This procedure is detailed in RA3.2.2.5. This value is used to determine the evaporator saturation temperature ($T_{evaporator,sat}$) from a pressure temperature chart for the appropriate refrigerant (can be internal to a digital gauge), which is entered into Row F08.
8. The Rater must independently collect this data. Enter the evaporator saturation temperature ($T_{evaporator,sat}$) from the digital gauge or a separate pressure-temperature chart that corresponds to the suction line pressure entered in Row F07, in degrees F.
9. Measured superheat is automatically calculated as the difference between the suction line temperature (Row F06) and the evaporator saturation temperature (Row F08)
10. The Rater must independently report this data. Enter target superheat from Table RA3.2-2. This table requires values for the condenser air dry bulb temperature (Row F02) and the return air wet bulb temperature (Row F05)
11. System passes superheat method when Row F10 is within plus or minus 8 degrees of Row F09.

A. System Information **HERS Rater to field-verify all system information, discrepancies to be noted by overwriting entry.**		
01	System Identification or Name	
02	System Location or Area Served	
03	Condenser (or package unit) make or brand	
04	Condenser (or package unit) model number	
05	Nominal Cooling Capacity (tons) of Condenser	
06	Condenser (or package unit) serial number	
07	Refrigerant Type	
08	Other Refrigerant Type (if applicable)	
09	Project Type	
10	Charge Indicator Display (CID) Status (Note: Even systems with a CID must have refrigerant charge verified by installer)	
11	Is the system of a type that the minimum airflow can be verified using an approved measurement procedure (RA3.3 or RA3.2.2.7)?	
12	Is the system of a type that approved refrigerant charge verification procedures can be used to verify compliance with the refrigerant charge verification requirements when temperatures are ≥ 55°F (RA3.2.2, or RA1)?	
13	Date of HERS Rater Refrigerant Charge Verification for this system	
14	Refrigerant charge verification method used by installer.	
15	Person who performed the Refrigerant Charge Verification reported on the Certificate of Installation:	
16	HERS Verification Compliance Requirement Status	
	Generate list for next row (this is hidden from user)	
17	Refrigerant charge verification method used by HERS Rater.	
18	determine compliance method for this document; display applicable tables below; (this row not visible to user)	

Standard Charge Verification Procedure - MCH25b - Subcooling Method

B. Metering Device Verification – HERS Rater is required to visually field verify all information from C2R Subcooling Method can only be used on systems that have a variable metering device.		
01	Refrigerant metering device	
02	Subcooling Method applicability status	

C. Instrument Calibration – HERS Raters are required to calibrate their diagnostic tools. Procedures for instrument calibration are given in Reference Residential Appendix RA3.2.2 and RA3.2.2.2		
01	Date of Digital Refrigerant Gauge Calibration	
02	Date of Digital Thermocouple Calibration	
03	Digital Refrigerant Gauge Calibration Status	
04	Digital Thermocouple Calibration Status	

D. Measurement Access Hole (MAH) Verification – HERS Raters are required to visually field verify MAH *Procedures for installing MAH are specified in Reference Residential Appendix RA3.2.2.3*		
01	Method used to demonstrate compliance with the Measurement Access Hole (MAH) requirement	•

E. Minimum System Airflow Rate Verification **Procedures for verifying minimum system airflow are specified in Reference Residential Appendix RA3.2.2.7.**		
01	Minimum Required System Airflow Rate (cfm)	
02	System Airflow Rate Verification Status	

F. Data Collection and Calculations – HERS Rater must independently collect all data in this section. **Procedures for determining Refrigerant Charge using the Standard Charge Verification Procedure are given in Reference Residential Appendix RA3.2.2.**		
01	Lowest return air dry bulb temperature that occurred during the refrigerant charge verification procedure (degreeF)	
02	Measured Condenser air entering dry-bulb temperature ($T_{condenser, db}$)	
03	Outdoor Temperature Qualification Status	
04	Measured Liquid Line Temperature (T_{liquid}) (degreeF)	
05	Measured Liquid Line Pressure (P_{liquid}) (psig)	
06	Condenser saturation temperature ($T_{condensor, sat}$) from digital gauge or P-T Table using Line F05 (degreeF)	
07	Measured Subcooling (Line F06 – Line F04) (degreeF)	

Project Name:	Enforcement Agency:	Permit Number:
Dwelling Address:	City	Zip Code

08	Target Subcooling from Manufacturer (degreeF)	
09	Compliance Statement:	

G. Metering Device Verification– HERS Rater must independently collect all data in this section.
Procedures for the verification of proper metering device operation are specified in RA3.2.2.6.2

01	Measured Suction line temperature ($T_{suction}$) (degreeF)	<user entry, check range = -40 to 150>
02	Measured Suction line pressure ($P_{suction}$) (psig)	
03	Evaporator saturation temperature ($T_{evaporator, sat}$) from digital gauge or P-T Table using line G02 (degreeF)	
04	Measured Superheat (Line G01 – Line G03) (degreeF)	
05	Measured Superheat (Line G04) is between 3 and 26 deg F (inclusive)	
06	Measured Superheat (Line G04) is within manufacturer's specifications, if known.	
07	Compliance Statement:	

DOCUMENTATION AUTHOR'S DECLARATION STATEMENT

1. I CERTIFY THAT THIS CERTIFICATE OF VERIFICATION DOCUMENTATION IS ACCURATE AND COMPLETE.

Documentation Author Name:	Documentation Author Signature:
Company:	Date Signed:
Address:	CEA/HERS Certification Information (if applicable):
City/State/Zip:	Phone:

RESPONSIBLE PERSON'S DECLARATION STATEMENT

I certify the following under penalty of perjury, under the laws of the State of California:

1. The information provided on this Certificate of Verification is true and correct.
2. I am the certified HERS Rater who performed the verification identified and reported on this Certificate of Verification (responsible rater).
3. The installed features, materials, components, manufactured devices, or system performance diagnostic results that require HERS verification identified on this Certificate of Verification comply with the applicable requirements in Reference Appendices RA2, RA3, and the requirements specified on the Certificate of Compliance for the building approved by the enforcement agency.
4. The information reported on applicable sections of the Certificate(s) of Installation (CF2R) signed and submitted by the person(s) responsible for the construction or installation conforms to the requirements specified on the Certificate(s) of Compliance (CF1R) approved by the enforcement agency.
5. I will ensure that a registered copy of this Certificate of Verification shall be posted, or made available with the building permit(s) issued for the building, and made available to the enforcement agency for all applicable inspections. I understand that a registered copy of this Certificate of Verification is required to be included with the documentation the builder provides to the building owner at occupancy.

BUILDER OR INSTALLER INFORMATION AS SHOWN ON THE CERTIFICATE OF INSTALLATION

Company Name (Installing Subcontractor, General Contractor, or Builder/Owner):	
Responsible Builder or Installer Name:	CSLB License:

HERS PROVIDER DATA REGISTRY INFORMATION

Sample Group Number (if applicable):	Dwelling Test Status in Sample Group (if applicable)

Project Name:	Enforcement Agency:	Permit Number:
Dwelling Address:	City	Zip Code

HERS RATER INFORMATION	
HERS Rater Company Name:	
Responsible Rater Name:	Responsible Rater Signature:
Responsible Rater Certification Number w/ this HERS Provider	Date Signed:

Instructions MCH-25b:

Section A. System Information

1. This information is automatically pulled from the Certificate of Installation (CF2R-MCH-25). If installed system does not match this entry, it can be overwritten by rater but it will be flagged as a possible fail.
2. This information is automatically pulled from the Certificate of Installation (CF2R-MCH-25) If installed system does not match this entry, it can be overwritten by rater but it will be flagged as a possible fail.
3. This information is automatically pulled from the Certificate of Installation (CF2R-MCH-25). If installed system does not match this entry, it can be overwritten by rater but it will be flagged as a possible fail.
4. This information is automatically pulled from the Certificate of Installation (CF2R-MCH-25) If installed system does not match this entry, it can be overwritten by rater but it will be flagged as a possible fail.
5. This information is automatically pulled from the Certificate of Installation (CF2R-MCH-25). If installed system does not match this entry, it can be overwritten by rater but it will be flagged as a possible fail.
6. This information is automatically pulled from the Certificate of Installation (CF2R-MCH-25) If installed system does not match this entry, it can be overwritten by rater but it will be flagged as a possible fail.
7. This information is automatically pulled from the Certificate of Installation (CF2R-MCH-25) If installed system does not match this entry, it can be overwritten by rater but it will be flagged as a possible fail.
8. This information is automatically pulled from the Certificate of Installation (CF2R-MCH-25). If "Other" is chosen in Row A07, then installer will indicate the type of refrigerant being used. If R-22 or R-410A is being used (regardless of trade name, Puron, Genetron, etc.) it should be indicated in Row A07, not here. This row is only for refrigerants other than R-22 and R-410a. Documentation of other refrigerants should be requested. If installed system does not match this entry, it can be overwritten by rater but it will be flagged as a possible fail.
9. This information is automatically pulled from the Certificate of Installation (CF2R-MCH-25). These are defined in detail the Residential Compliance Manual. If installed system does not match this entry, it can be overwritten by rater but it will be flagged as a possible fail.
10. This information is automatically pulled from the Certificate of Installation (CF2R-MCH-25). Installer is to select the appropriate choice regarding whether this system has a Charge Indicator Display (CID). Qualifying CID's may exempt a system from HERS refrigerant charge verification. CID's are described in Joint Appendix JA6.1. Qualfying CID's must appear on a list of approved devices kept by the Commission. If installed system does not match the description here, it fails.
11. This information is automatically pulled from the Certificate of Installation (CF2R-MCH-25). Most ducted split systems and package systems are of the type that minimum airflow can be verified using an approved measurement procedure. Examples of systems that do not meet this description are ductless systems. Selecting "No" here may subject the project to additional scrutiny by enforcement personnel.
12. This information is automatically pulled from the Certificate of Installation (CF2R-MCH-25) Most ducted split systems and package systems are of the type that approved refrigerant charge verification procedures detailed in Residential Appendix RA3.2.2 or RA1 can be used (i.e., Standard Charge Verification or Winter Setup Verification procedures). Examples of systems that may not meet this description are "mini splits" or variable refrigerant flow systems that may only be charged using weigh-in procedures. Selecting "No" here may subject the project to additional scrutiny.
13. HERS rater to input date of refrigerant charge verification.

14. This information is automatically pulled from the Certificate of Installation (CF2R-MCH-25). The installer is to have select the refrigerant charge verification method used from the choices provided:
    - Superheat (outdoor temperature must be ≥ 55 degF); This verification method can only be used when the outdoor temperature is at or above 55 degF. It is only used on systems with fixed orifice refrigerant metering devices (non-variable metering devices). This method is detailed in Reference Appendix RA3.2.2.6.1. Systems verified using this method may be eligible for HERS verification compliance using sampling. Choosing this option will generate a CF2R-MCH-25a.
    - Subcooling (outdoor temperature must be ≥ 55 degF); This verification method can only be used when the outdoor temperature is at or above 55 degF. It is only used on systems with variable metering devices (TXV or EXV). This method is detailed in Reference Appendix RA3.2.2.6.2. Systems verified using this method may be eligible for HERS verification compliance using sampling. Choosing this option will generate a CF2R-MCH-25b.
    - Weigh-in; This verification method can be used at any outdoor temperature allowed by the equipment manufacturer. This method is detailed in Reference Appendix RA3.2.3. Systems verified using this method are NOT eligible for HERS verification compliance using Group Sampling. Choosing this option will generate a CF2R-MCH-25c.
    - Winter Setup (applicable when outdoor temperature is < 55 degF); The Winter Setup verification method is a special version of the Subcooling method. It can be used when the outdoor temperature is between 37 and 55 degF. It can only be used on equipment where the manufacturer has specifically approved it for the equipment being tested. The Winter Setup procedure is details in Residential Appendix RA1.2. Choosing this option will generate a CF2R-MCH-25e.
    - New Package Unit Factory Charge; Choose this option when a new package unit is being installed that has an AHRI rating. This helps ensure that the unit was properly charged at the factory. HERS verification of refrigerant charge may not be required in this case. Choosing this option will generate a CF2R-MCH-25f.
15. This information is automatically pulled from the Certificate of Installation (CF2R-MCH-25). The installer (or rater) is to have identified who performed the verification that is documented on the Certificate of Installation. Note that HERS verification compliance by Group Sampling requires that the installer perform their own refrigerant charge verification as part of the installation of the equipment prior to the system being put into a sample group for possible selection by a HERS rater for verification. If Group Sampling is not intended, the HERS Rater may perform the refrigerant charge verification on behalf of the Installing Contractor (applies to any method but Weigh-In) and the Rater will enter same results on both the CF2R and CF3R.
16. This information is automatically pulled from the Certificate of Installation (CF2R-MCH-25). The Group Sampling status is automatically displayed based on the input results of Row A14 and Row A15 on the CF2R. Group Sampling procedures are detailed Residential Appendix RA2.3.
17. Specify the refrigerant charge verification used by the rater. Choices vary depending on what method was specified in Row A14.

Section B. Metering Device Verification

1. This information is automatically pulled from the Certificate of Installation (CF2R-MCH-25). Installer is to have selected the correct metering device used on the system being verified. This will check against the refrigerant charge verification method selected in Row A14. An error message will appear in Row

B02 if the wrong verification method may has been selected. Superheat verification can only be used on systems with fixed orifice and Subcool verification can only be used on systems with variable metering devices (TXV or EXV). This entry must match installed system to pass.

2. This information is automatically pulled from the Certificate of Installation (CF2R-MCH-25). Superheat verification can only be used on systems with fixed orifice and Subcool verification can only be used on systems with variable metering devices (TXV or EXV).

Section C. Instrument Calibration

1. Enter the date of most recent Digital Refrigerant Gauge Calibration Field Check by rater. Analog gauges are not allowed for verification purposes under the 2013 Standards. Specification for pressure gauges is found in Residential Appendix RA3.2.2.2.3. Procedures for the field check procedure are detailed in RA3.2.2.4.2. Calibration field check must happen at least once every 30 days.
2. Enter the date of the most recent Digital Thermocouple Calibration by rater. Specifications for thermocouples and temperature sensors can be found in Residential Appendix RA3.2.2.2.2. Procedures for calibration are detailed in RA3.2.2.4.1. Calibration must happen at least once every 30 days.
3. Digital Refrigerant Gauge Calibration status will appear automatically. If the date entered in Row C01 is more than 30 days prior to date of verification this row will indicate that calibration is required and you will not be allowed to continue filling out this document.
4. Digital Thermocouple Calibration status will appear automatically. If the date entered in Row C02 is more than 30 days prior to date of verification this row will indicate that calibration is required and you will not be allowed to continue filling out this document.

Section D. Measurement Access Hole (MAH) Verification

1. This information is automatically pulled from the Certificate of Installation (CF2R-MCH-25). Installer is to have indicated the method used to demonstrate compliance with the MAH requirement by selecting the appropriate method from the drop down list. Procedures for installing MAH's are detailed in RA3.2.2.3. Selecting that the MAH cannot be installed consistent with Figure 3.2-1 may result in additional scrutiny by enforcement personnel.) If installed system does not match this entry, it can be overwritten by rater but it will be flagged as a possible fail.

Section E. Minimum System Airflow Rate Verification

1. This information is automatically calculated based on the information given in line A09. This is the target minimum system airflow required for the system being verified.
2. This information is automatically calculated based on either the CF3R-MCH-23, or CF3R-MCH-24, which documents the rater's measured airflow of the system being verified. If the measured airflow is not adequate it will not comply with the airflow requirements and refrigerant charge verification cannot be performed.

Section F. Subcooling Charge Verification Method – Data Collection

1. The Rater must independently collect this data. Measure and record the lowest return air dry-bulb temperature that occurred during the refrigerant charge procedure in degrees F. This temperature must remain above 70 degF during the verification procedure. This requirement is detailed in Residential Appendix RA3.2.2.5.
2. The Rater must independently collect this data. Measure and record the condenser air dry-bulb temperature ($T_{condenser}$) in degrees F. This value must be at least 55 degF and no more than 115 degF to use the Subcooling Charge Verification Method.
3. If a value less than 55 degF or greater than 115 degF is entered in Row F02 the Subcooling Method cannot be used.
4. The Rater must independently collect this data. Measure and record the liquid line temperature (T_{liquid}) in degrees F. This procedure is detailed in RA3.2.2.5. This value is used to calculate the measured subcool temperature.
5. The Rater must independently collect this data. Measure and record the liquid line pressure (P_{liquid}) in psig. This procedure is detailed in RA3.2.2.5. This value is used to determine the condenser saturation temperature ($T_{condenser,sat}$) from a pressure temperature chart for the appropriate refrigerant (can be internal to a digital gauge), which is entered into Row F06.
6. Enter the condenser saturation temperature ($T_{condenser,sat}$) from the digital gauge or a separate pressure-temperature chart that corresponds to the liquid line pressure entered in Row F05, in degrees F.
7. Measured Subcooling is automatically calculated as the difference between the liquid line temperature (Row F04) and the condenser saturation temperature (Row F06)
8. The Rater must independently collect this data. Enter target subcooling from manufacturer. This may be a challenge to find for older equipment. Internet searches can sometimes result in archived equipment specifications for the equipment in question, or sometimes a very similar model. If the manufacturer's target cannot be found the Commission's Executive Director may provide additional guidance for compliance.
9. System passes Subcooling method when Row F08 is within plus or minus 5 degrees of Row F07.

Section G. Metering Device Verification

1. The Rater must independently collect this data. Measure and record the suction line temperature ($T_{suction}$) in degrees F. This procedure is detailed in RA3.2.2.5. This value is used to calculate the measured superheat.
2. The Rater must independently collect this data. Measure and record the suction line pressure ($P_{suction}$) in psig. This procedure is detailed in RA3.2.2.5. This value is used to determine the evaporator saturation temperature ($T_{evaporator,sat}$) from a pressure temperature chart for the appropriate refrigerant (can be internal to a digital gauge), which is entered into Row G03.
3. Enter the evaporator saturation temperature ($T_{evaporator,sat}$) from the digital gauge or a separate pressure-temperature chart that corresponds to the suction line pressure entered in Row G02, in degrees F.
4. Measured superheat is automatically calculated as the difference between the suction line temperature (Row G01) and the evaporator saturation temperature (Row G03)
5. There are two possible criteria for passing. If the manufacturer's specification is known it should be used, otherwise the CEC requirement is that the superheat be between 4 and 25 degF, inclusive. This row checks the CEC requirement.

6. If the manufacturer's target superheat for ensuring proper metering device operation is known, it supersedes the CEC requirement of being between 4 and 25 degF. If "Yes, documentation to be provided upon request." is selected, the installer should be prepared to provide documentation for the target values used.
7. There are two possible criteria for passing. If the manufacturer's specification is known it should be used, otherwise the CEC requirement is that the superheat be between 4 and 25 degF, inclusive. If "Yes, documentation to be provided upon request." is selected in Row G06, the installer should be prepared to provide documentation for the target values used.

A. System Information

HERS Rater to field-verify all system information, discrepancies to be noted by overwriting entry.

01	System Identification or Name	
02	System Location or Area Served	
03	Condenser (or package unit) make or brand	
04	Condenser (or package unit) model number	
05	Nominal Cooling Capacity (tons) of Condenser	
06	Condenser (or package unit) serial number	
07	Refrigerant Type	
08	Other Refrigerant Type (if applicable)	
09	Project Type	
10	Charge Indicator Display (CID) Status (Note: Even systems with a CID must have refrigerant charge verified by installer)	
11	Is the system of a type that the minimum airflow can be verified using an approved measurement procedure (RA3.3 or RA3.2.2.7)?	
12	Is the system of a type that approved refrigerant charge verification procedures can be used to verify compliance with the refrigerant charge verification requirements when temperatures are ≥ 55°F (RA3.2.2, or RA1)?	
13	Date of HERS Rater Refrigerant Charge Verification for this system	
14	Refrigerant charge verification method used by installer.	
15	Person who performed the Refrigerant Charge Verification reported on the Certificate of Installation:	
16	HERS Verification Compliance Requirement Status	
	Generate list for next row (this is hidden from user)	
17	Refrigerant charge verification method used by HERS Rater.	
18	determine compliance method for this document; display applicable tables below; (this row not visible to user)	

Weigh In Charging Procedure HERS Rater Observation- MCH25c

B. Measurement Access Hole (MAH) Verification – HERS Raters are required to visually field verify MAH *Procedures for installing MAH are specified in Reference Residential Appendix RA3.2.2.3*		
01	Method used to demonstrate compliance with the Measurement Access Hole (MAH) requirement	•

C. Minimum System Airflow Rate Verification **Procedures for verifying minimum system airflow are specified in Reference Residential Appendix RA3.2.2.7.**		
01	Minimum Required System Airflow Rate (cfm)	
02	System Airflow Rate Verification Status	

D. Weigh In Charge Procedure – HERS Rater Must Observe and Confirm All Data Collected Procedures for Refrigerant Charge using the Weigh-in Charging Procedure are given in Reference Residential Appendix RA3.2.2.2 and RA3.2.3		
01	Measured Condenser air entering dry-bulb temperature ($T_{condenser, db}$)	
02	Specify the method of weigh-in	
03	Manufacturer's Standard charge for condenser (lbs)	
04	Manufacturer's Standard liquid line length (ft)	
05	Manufacturer's Standard liquid line diameter (in)	
06	Manufacturer's Standard indoor coil size (tons)	
07	Installed liquid line length (ft)	
08	Installed liquid line diameter (in)	
09	Installed indoor coil size (tons)	
10	Charge adjustment from manufacturer's specifications (ounces, positive = add, negative = remove)	
11	All brazing of refrigerant lines done with dry nitrogen in lines and evaporator coil	
12	Prior to introducing refrigerant, system is evacuated to 500 microns or less and, when isolated, has risen no more than 300 microns after 5 minutes.	
13	Weigh-in Charge Adjustment: If condenser is new with a factory pre-charge, the proper amount of refrigerant has been added or removed (line D10).	
14	Weigh-in Total Charge: If the condenser is not new or is new but does not have a factory pre-charge, the correct total charge has been introduced into the system (line D03 + Line D10)	

Project Name:	Enforcement Agency:	Permit Number:
Dwelling Address:	City	Zip Code

DOCUMENTATION AUTHOR'S DECLARATION STATEMENT

1. I certify that this Certificate of Verification documentation is accurate and complete.

Documentation Author Name:	Documentation Author Signature:
Company:	Date Signed:
Address:	CEA/HERS Certification Information (if applicable):
City/State/Zip:	Phone:

RESPONSIBLE PERSON'S DECLARATION STATEMENT

I certify the following under penalty of perjury, under the laws of the State of California:

1. The information provided on this Certificate of Verification is true and correct.
2. I am the certified HERS Rater who performed the verification identified and reported on this Certificate of Verification (responsible rater).
3. The installed features, materials, components, manufactured devices, or system performance diagnostic results that require HERS verification identified on this Certificate of Verification comply with the applicable requirements in Reference Appendices RA2, RA3, and the requirements specified on the Certificate of Compliance for the building approved by the enforcement agency.
4. The information reported on applicable sections of the Certificate(s) of Installation (CF2R) signed and submitted by the person(s) responsible for the construction or installation conforms to the requirements specified on the Certificate(s) of Compliance (CF1R) approved by the enforcement agency.
5. I will ensure that a registered copy of this Certificate of Verification shall be posted, or made available with the building permit(s) issued for the building, and made available to the enforcement agency for all applicable inspections. I understand that a registered copy of this Certificate of Verification is required to be included with the documentation the builder provides to the building owner at occupancy.

BUILDER OR INSTALLER INFORMATION AS SHOWN ON THE CERTIFICATE OF INSTALLATION

Company Name (Installing Subcontractor, General Contractor, or Builder/Owner):	
Responsible Builder or Installer Name:	CSLB License:

HERS PROVIDER DATA REGISTRY INFORMATION

Sample Group Number (if applicable):	Dwelling Test Status in Sample Group (if applicable)

HERS RATER INFORMATION

HERS Rater Company Name:	
Responsible Rater Name:	Responsible Rater Signature:
Responsible Rater Certification Number w/ this HERS Provider	Date Signed:

Instructions MCH-25c:

Section A. System Information

1. This information is automatically pulled from the Certificate of Installation (CF2R-MCH-25). If installed system does not match this entry, it can be overwritten by rater but it will be flagged as a possible fail.
2. This information is automatically pulled from the Certificate of Installation (CF2R-MCH-25) If installed system does not match this entry, it can be overwritten by rater but it will be flagged as a possible fail.
3. This information is automatically pulled from the Certificate of Installation (CF2R-MCH-25). If installed system does not match this entry, it can be overwritten by rater but it will be flagged as a possible fail.
4. This information is automatically pulled from the Certificate of Installation (CF2R-MCH-25) If installed system does not match this entry, it can be overwritten by rater but it will be flagged as a possible fail.
5. This information is automatically pulled from the Certificate of Installation (CF2R-MCH-25). If installed system does not match this entry, it can be overwritten by rater but it will be flagged as a possible fail.
6. This information is automatically pulled from the Certificate of Installation (CF2R-MCH-25) If installed system does not match this entry, it can be overwritten by rater but it will be flagged as a possible fail.
7. This information is automatically pulled from the Certificate of Installation (CF2R-MCH-25) If installed system does not match this entry, it can be overwritten by rater but it will be flagged as a possible fail.
8. This information is automatically pulled from the Certificate of Installation (CF2R-MCH-25). If "Other" is chosen in Row A07, then installer will indicate the type of refrigerant being used. If R-22 or R-410A is being used (regardless of trade name, Puron, Genetron, etc.) it should be indicated in Row A07, not here. This row is only for refrigerants other than R-22 and R-410a. Documentation of other refrigerants should be requested. If installed system does not match this entry, it can be overwritten by rater but it will be flagged as a possible fail.
9. This information is automatically pulled from the Certificate of Installation (CF2R-MCH-25). These are defined in detail the Residential Compliance Manual. If installed system does not match this entry, it can be overwritten by rater but it will be flagged as a possible fail.
10. This information is automatically pulled from the Certificate of Installation (CF2R-MCH-25). Installer is to select the appropriate choice regarding whether this system has a Charge Indicator Display (CID). Qualifying CID's may exempt a system from HERS refrigerant charge verification. CID's are described in Joint Appendix JA6.1. Qualfying CID's must appear on a list of approved devices kept by the Commission. If installed system does not match the description here, it fails.
11. This information is automatically pulled from the Certificate of Installation (CF2R-MCH-25). Most ducted split systems and package systems are of the type that minimum airflow can be verified using an approved measurement procedure. Examples of systems that do not meet this description are ductless systems. Selecting "No" here may subject the project to additional scrutiny by enforcement personnel.
12. This information is automatically pulled from the Certificate of Installation (CF2R-MCH-25) Most ducted split systems and package systems are of the type that approved refrigerant charge verification procedures detailed in Residential Appendix RA3.2.2 or RA1 can be used (i.e., Standard Charge Verification or Winter Setup Verification procedures). Examples of systems that may not meet this description are "mini splits" or variable refrigerant flow systems that may only be charged using weigh-in procedures. Selecting "No" here may subject the project to additional scrutiny.
13. HERS rater to input date of refrigerant charge verification.

14. This information is automatically pulled from the Certificate of Installation (CF2R-MCH-25). The installer is to have select the refrigerant charge verification method used from the choices provided:
    - Superheat (outdoor temperature must be ≥ 55 degF); This verification method can only be used when the outdoor temperature is at or above 55 degF. It is only used on systems with fixed orifice refrigerant metering devices (non-variable metering devices). This method is detailed in Reference Appendix RA3.2.2.6.1. Systems verified using this method may be eligible for HERS verification compliance using sampling. Choosing this option will generate a CF2R-MCH-25a.
    - Subcooling (outdoor temperature must be ≥ 55 degF); This verification method can only be used when the outdoor temperature is at or above 55 degF. It is only used on systems with variable metering devices (TXV or EXV). This method is detailed in Reference Appendix RA3.2.2.6.2. Systems verified using this method may be eligible for HERS verification compliance using sampling. Choosing this option will generate a CF2R-MCH-25b.
    - Weigh-in; This verification method can be used at any outdoor temperature allowed by the equipment manufacturer. This method is detailed in Reference Appendix RA3.2.3. Systems verified using this method are NOT eligible for HERS verification compliance using Group Sampling. Choosing this option will generate a CF2R-MCH-25c.
    - Winter Setup (applicable when outdoor temperature is < 55 degF); The Winter Setup verification method is a special version of the Subcooling method. It can be used when the outdoor temperature is between 37 and 55 degF. It can only be used on equipment where the manufacturer has specifically approved it for the equipment being tested. The Winter Setup procedure is details in Residential Appendix RA1.2. Choosing this option will generate a CF2R-MCH-25e.
    - New Package Unit Factory Charge; Choose this option when a new package unit is being installed that has an AHRI rating. This helps ensure that the unit was properly charged at the factory. HERS verification of refrigerant charge may not be required in this case. Choosing this option will generate a CF2R-MCH-25f.
15. This information is automatically pulled from the Certificate of Installation (CF2R-MCH-25). The installer (or rater) is to have identified who performed the verification that is documented on the Certificate of Installation. Note that HERS verification compliance by Group Sampling requires that the installer perform their own refrigerant charge verification as part of the installation of the equipment prior to the system being put into a sample group for possible selection by a HERS rater for verification. If Group Sampling is not intended, the HERS Rater may perform the refrigerant charge verification on behalf of the Installing Contractor (applies to any method but Weigh-In) and the Rater will enter same results on both the CF2R and CF3R.
16. This information is automatically pulled from the Certificate of Installation (CF2R-MCH-25). The Group Sampling status is automatically displayed based on the input results of Row A14 and Row A15 on the CF2R. Group Sampling procedures are detailed Residential Appendix RA2.3.
17. Specify the refrigerant charge verification used by the rater. Choices vary depending on what method was specified in Row A14.

Section B. Measurement Access Hole (MAH) Verification

1. This information is automatically pulled from the Certificate of Installation (CF2R-MCH-25). Installer is to have indicated the method used to demonstrate compliance with the MAH requirement by selecting the appropriate method from the drop down list. Procedures for installing MAH's are detailed in

RA3.2.2.3. Selecting that the MAH cannot be installed consistent with Figure 3.2-1 may result in additional scrutiny by enforcement personnel.) If installed system does not match this entry, it can be overwritten by rater but it will be flagged as a possible fail.

Section C. Minimum System Airflow Rate Verification

1. This information is automatically calculated based on the information given in line A09. This is the target minimum system airflow required for the system being verified.
2. This information is automatically calculated based on either the CF3R-MCH-23, or CF3R-MCH-24, which documents the rater's measured airflow of the system being verified. If the measured airflow is not adequate it will not comply with the airflow requirements and refrigerant charge verification cannot be performed.

Section D. Weigh In Charge Procedure

1. HERS rater must visually observe the installer taking this measurement and confirm that correct values are entered into the CF2R. Measure and record the outside air dry-bulb temperature in degrees F. This will affect the procedures that may be used for HERS verification.
2. HERS rater must confirm that correct values are entered into the CF2R. Specify the method of weigh-in. There are two options that may be used. One is to add or remove a small, weighed portion of refrigerant from a factory charged unit (Charge Adjustment). The other is to weigh the entire charge of refrigerant before introducing it into the system (Total Charge). Select either one. Note: The amount of refrigerant in systems that are not newly installed cannot be assumed to be the factory charge. Systems using existing refrigerant must use the Total Charge method. Only new, factory installed equipment can utilize the Charge Adjustment method.
3. HERS rater must confirm that correct values are entered into the CF2R. Enter the Manufacturer's Standard Charge for condenser in pounds and ounces. This is the amount of refrigerant that the manufacturer specifies for a "standard" installation (typical coil match, typical line set size and length). For the Charge Adjustment method, this is the amount of refrigerant that factory charges the system to. Rater should request to see manufacturer's documentation to support this value.
4. HERS rater must confirm that correct values are entered into the CF2R. The Manufacturer's Standard Charge, specified in E03 is based on a standard liquid line length, typically 25 feet. Enter the value here, in feet. Be prepared to provide manufacturer's documentation to support this value.
5. HERS rater must confirm that correct values are entered into the CF2R. The Manufacturer's Standard Charge, specified in E03 is based on a standard liquid line diameter. Enter the value here, in inches (for example: 1/4", 3/8", etc.). Rater should request to see manufacturer's documentation to support this value.
6. HERS rater must confirm that correct values are entered into the CF2R. The Manufacturer's Standard Charge, specified in E03 is based on a standard indoor (evaporator) coil size. Enter the value here, in tons. Rater should request to see manufacturer's documentation to support this value.
7. HERS rater must confirm that correct values are entered into the CF2R. Enter the length of the liquid line installed on the system being verified, in feet. This value must be compared to the standard liquid line length entered in E04 and used to determine if the Manufacturer's Standard Charge entered in E03 is appropriate.

8. HERS rater must confirm that correct values are entered into the CF2R. Enter the diameter of the liquid line installed on the system being verified, in inches (for example: 1/4", 3/8", etc.). This value must be compared to the standard liquid line diameter entered in E05 and used to determine if the Manufacturer's Standard Charge entered in E03 is appropriate.
9. HERS rater must confirm that correct values are entered into the CF2R. Enter the size of the indoor (evaporator) coil installed on the system being verified, in tons. This value must be compared to the standard coil size entered in E06 and used to determine if the Manufacturer's Standard Charge entered in E03 is appropriate.
10. HERS rater must confirm that correct values are entered into the CF2R. Enter the Charge Adjustment to Standard Charge, in ounces. This is the amount of refrigerant that the manufacturer specifies to add to, or remove from, the Manufacturer's Standard Charge entered in E03. This value must come from manufacturer's specifications using the standard values entered in Rows E04 through E06 to the installed values entered in Rows E07 through E09. If refrigerant is to be added, this value should be a positive number. If refrigerant is to be removed, this value should be a negative number. Rater should request to see manufacturer's documentation to support this value.
11. HERS rater must confirm that brazing of refrigerant lines was done with dry nitrogen in lines and evaporator coil. This ensures that there are no contaminants in the refrigerant lines prior to charging.
12. HERS rater must confirm that system was evacuated to 500 microns or leas and, when isolated, has risen no more than 300 microns after 5 minutes. This ensures that the system will not leak refrigerant after charging.
13. HERS rater must confirm that correct values are entered into the CF2R. This value is calculated automatically. If "Charge Adjustment" was specified in Row E02, then the value shown here will be the same as the value shown in Row E10. This is the amount of weighed refrigerant that will be added or removed from the factory charged unit. If refrigerant is to be added, this value should be a positive number. If refrigerant is to be removed, this value should be a negative number. If "Total Charge" was specified in Row E02, then the value shown here will be the value in row E03 added to the value in row E10. This is the total amount of refrigerant that will be in the system, all of which must be weighed before introducing into the system.
14. HERS rater must confirm that correct values are entered into the CF2R. Enter the amount of refrigerant weighed and added to, or removed from, system. If refrigerant is to be added, this value should be a positive number. If refrigerant is to be removed from a factory charged system, this value should be a negative number. This value must match the value in E11 for the system to pass.

A. System Information

HERS Rater to field-verify all system information, discrepancies to be noted by overwriting entry.

01	System Identification or Name	
02	System Location or Area Served	
03	Condenser (or package unit) make or brand	
04	Condenser (or package unit) model number	
05	Nominal Cooling Capacity (tons) of Condenser	
06	Condenser (or package unit) serial number	
07	Refrigerant Type	
08	Other Refrigerant Type (if applicable)	
09	Project Type	
10	Charge Indicator Display (CID) Status (Note: Even systems with a CID must have refrigerant charge verified by installer)	
11	Is the system of a type that the minimum airflow can be verified using an approved measurement procedure (RA3.3 or RA3.2.2.7)?	
12	Is the system of a type that approved refrigerant charge verification procedures can be used to verify compliance with the refrigerant charge verification requirements when temperatures are ≥ 55°F (RA3.2.2, or RA1)?	
13	Date of HERS Rater Refrigerant Charge Verification for this system	
14	Refrigerant charge verification method used by installer.	
15	Person who performed the Refrigerant Charge Verification reported on the Certificate of Installation:	
16	HERS Verification Compliance Requirement Status	
	Generate list for next row (this is hidden from user)	
17	Refrigerant charge verification method used by HERS Rater.	
18	determine compliance method for this document; display applicable tables below; (this row not visible to user)	

Verification of Charge Indicator Display – CF2R-MCH-25d – CID

B. Charge Indicator Display Verification Applicability		
01	Measured Condenser air entering dry-bulb temperature ($T_{condenser, db}$) (degreeF)	
02	Outdoor Temperature Qualification Status	
03	Self Diagnostic Reporting (SDR)	
04	Charge Indicator Display Verification Applicability	

C. Measurement Access Hole (MAH) Verification – HERS Raters are required to visually field verify MAH *Procedures for installing MAH are specified in Reference Residential Appendix RA3.2.2.3*		
01	Method used to demonstrate compliance with the Measurement Access Hole (MAH) requirement	•

D. Minimum System Airflow Rate Verification *Procedures for verifying minimum system airflow are specified in Reference Residential Appendix RA3.2.2.7.*		
01	Minimum Required System Airflow Rate (cfm)	
02	System Airflow Rate Verification Status	

E. Charge Indicator Display *Procedures for the Charge Indicator Display Verification are detailed in RA3.4.2*		
01	CID Manufacturer Name/Make	
02	CID Model Number	
03	The display module is mounted adjacent to the system thermostat	
04	The manufacturer has certified to the Energy Commission that the CID model meets the requirements of Reference Joint Appendix JA6 (Make and model found on CEC list of approved CID devices)	
05	The system has operated for at least 15 minutes and the CID reports that the system is operating within acceptable parameters.	
06	Compliance Statement:	

Project Name:	Enforcement Agency:	Permit Number:
Dwelling Address:	City	Zip Code

DOCUMENTATION AUTHOR'S DECLARATION STATEMENT

1. I certify that this Certificate of Verification documentation is accurate and complete.

Documentation Author Name:	Documentation Author Signature:
Company:	Date Signed:
Address:	CEA/HERS Certification Information (if applicable):
City/State/Zip:	Phone:

RESPONSIBLE PERSON'S DECLARATION STATEMENT

I certify the following under penalty of perjury, under the laws of the State of California:

1. The information provided on this Certificate of Verification is true and correct.
2. I am the certified HERS Rater who performed the verification identified and reported on this Certificate of Verification (responsible rater).
3. The installed features, materials, components, manufactured devices, or system performance diagnostic results that require HERS verification identified on this Certificate of Verification comply with the applicable requirements in Reference Appendices RA2, RA3, and the requirements specified on the Certificate of Compliance for the building approved by the enforcement agency.
4. The information reported on applicable sections of the Certificate(s) of Installation (CF2R) signed and submitted by the person(s) responsible for the construction or installation conforms to the requirements specified on the Certificate(s) of Compliance (CF1R) approved by the enforcement agency.
5. I will ensure that a registered copy of this Certificate of Verification shall be posted, or made available with the building permit(s) issued for the building, and made available to the enforcement agency for all applicable inspections. I understand that a registered copy of this Certificate of Verification is required to be included with the documentation the builder provides to the building owner at occupancy.

BUILDER OR INSTALLER INFORMATION AS SHOWN ON THE CERTIFICATE OF INSTALLATION

Company Name (Installing Subcontractor, General Contractor, or Builder/Owner):	
Responsible Builder or Installer Name:	CSLB License:

HERS PROVIDER DATA REGISTRY INFORMATION

Sample Group Number (if applicable):	Dwelling Test Status in Sample Group (if applicable)

HERS RATER INFORMATION

HERS Rater Company Name:	
Responsible Rater Name:	Responsible Rater Signature:
Responsible Rater Certification Number w/ this HERS Provider	Date Signed:

Instructions MCH-25d:

Section A. System Information

1. This information is automatically pulled from the Certificate of Installation (CF2R-MCH-25). If installed system does not match this entry, it can be overwritten by rater but it will be flagged as a possible fail.
2. This information is automatically pulled from the Certificate of Installation (CF2R-MCH-25) If installed system does not match this entry, it can be overwritten by rater but it will be flagged as a possible fail.
3. This information is automatically pulled from the Certificate of Installation (CF2R-MCH-25). If installed system does not match this entry, it can be overwritten by rater but it will be flagged as a possible fail.
4. This information is automatically pulled from the Certificate of Installation (CF2R-MCH-25) If installed system does not match this entry, it can be overwritten by rater but it will be flagged as a possible fail.
5. This information is automatically pulled from the Certificate of Installation (CF2R-MCH-25). If installed system does not match this entry, it can be overwritten by rater but it will be flagged as a possible fail.
6. This information is automatically pulled from the Certificate of Installation (CF2R-MCH-25) If installed system does not match this entry, it can be overwritten by rater but it will be flagged as a possible fail.
7. This information is automatically pulled from the Certificate of Installation (CF2R-MCH-25) If installed system does not match this entry, it can be overwritten by rater but it will be flagged as a possible fail.
8. This information is automatically pulled from the Certificate of Installation (CF2R-MCH-25). If "Other" is chosen in Row A07, then installer will indicate the type of refrigerant being used. If R-22 or R-410A is being used (regardless of trade name, Puron, Genetron, etc.) it should be indicated in Row A07, not here. This row is only for refrigerants other than R-22 and R-410a. Documentation of other refrigerants should be requested. If installed system does not match this entry, it can be overwritten by rater but it will be flagged as a possible fail.
9. This information is automatically pulled from the Certificate of Installation (CF2R-MCH-25). These are defined in detail the Residential Compliance Manual. If installed system does not match this entry, it can be overwritten by rater but it will be flagged as a possible fail.
10. This information is automatically pulled from the Certificate of Installation (CF2R-MCH-25). Installer is to select the appropriate choice regarding whether this system has a Charge Indicator Display (CID). Qualifying CID's may exempt a system from HERS refrigerant charge verification. CID's are described in Joint Appendix JA6.1. Qualfying CID's must appear on a list of approved devices kept by the Commission. If installed system does not match the description here, it fails.
11. This information is automatically pulled from the Certificate of Installation (CF2R-MCH-25). Most ducted split systems and package systems are of the type that minimum airflow can be verified using an approved measurement procedure. Examples of systems that do not meet this description are ductless systems. Selecting "No" here may subject the project to additional scrutiny by enforcement personnel.
12. This information is automatically pulled from the Certificate of Installation (CF2R-MCH-25) Most ducted split systems and package systems are of the type that approved refrigerant charge verification procedures detailed in Residential Appendix RA3.2.2 or RA1 can be used (i.e., Standard Charge Verification or Winter Setup Verification procedures). Examples of systems that may not meet this description are "mini splits" or variable refrigerant flow systems that may only be charged using weigh-in procedures. Selecting "No" here may subject the project to additional scrutiny.
13. HERS rater to input date of refrigerant charge verification.

14. This information is automatically pulled from the Certificate of Installation (CF2R-MCH-25). The installer is to have select the refrigerant charge verification method used from the choices provided:
    - Superheat (outdoor temperature must be ≥ 55 degF); This verification method can only be used when the outdoor temperature is at or above 55 degF. It is only used on systems with fixed orifice refrigerant metering devices (non-variable metering devices). This method is detailed in Reference Appendix RA3.2.2.6.1. Systems verified using this method may be eligible for HERS verification compliance using sampling. Choosing this option will generate a CF2R-MCH-25a.
    - Subcooling (outdoor temperature must be ≥ 55 degF); This verification method can only be used when the outdoor temperature is at or above 55 degF. It is only used on systems with variable metering devices (TXV or EXV). This method is detailed in Reference Appendix RA3.2.2.6.2. Systems verified using this method may be eligible for HERS verification compliance using sampling. Choosing this option will generate a CF2R-MCH-25b.
    - Weigh-in; This verification method can be used at any outdoor temperature allowed by the equipment manufacturer. This method is detailed in Reference Appendix RA3.2.3. Systems verified using this method are NOT eligible for HERS verification compliance using Group Sampling. Choosing this option will generate a CF2R-MCH-25c.
    - Winter Setup (applicable when outdoor temperature is < 55 degF); The Winter Setup verification method is a special version of the Subcooling method. It can be used when the outdoor temperature is between 37 and 55 degF. It can only be used on equipment where the manufacturer has specifically approved it for the equipment being tested. The Winter Setup procedure is details in Residential Appendix RA1.2. Choosing this option will generate a CF2R-MCH-25e.
    - New Package Unit Factory Charge; Choose this option when a new package unit is being installed that has an AHRI rating. This helps ensure that the unit was properly charged at the factory. HERS verification of refrigerant charge may not be required in this case. Choosing this option will generate a CF2R-MCH-25f.
15. This information is automatically pulled from the Certificate of Installation (CF2R-MCH-25). The installer (or rater) is to have identified who performed the verification that is documented on the Certificate of Installation. Note that HERS verification compliance by Group Sampling requires that the installer perform their own refrigerant charge verification as part of the installation of the equipment prior to the system being put into a sample group for possible selection by a HERS rater for verification. If Group Sampling is not intended, the HERS Rater may perform the refrigerant charge verification on behalf of the Installing Contractor (applies to any method but Weigh-In) and the Rater will enter same results on both the CF2R and CF3R.
16. This information is automatically pulled from the Certificate of Installation (CF2R-MCH-25). The Group Sampling status is automatically displayed based on the input results of Row A14 and Row A15 on the CF2R. Group Sampling procedures are detailed Residential Appendix RA2.3.
17. Specify the refrigerant charge verification used by the rater. Choices vary depending on what method was specified in Row A14.

Section B. Charge Indicator Display Verification Applicability

1. Measure and record the condenser entering dry bulb air temperature (outdoor air at condenser).
2. This box is filled automatically. If the outdoor temperature is less than 55 degF, the CID must be equipped with self diagnostic reporting capabilities for it to operate correctly when it is below 55 degF.

3. Rater to verify whether or not CID is equipped with SDR capability. This can be determined by checking model number against CEC list of approved CIDs.
4. This box is filled automatically. The outdoor temperature must be above 55 degF or the CID must be equipped with SDR capability for CID verification to proceed.

Section C. Measurement Access Hole (MAH) Verification

1. This information is automatically pulled from the Certificate of Installation (CF2R-MCH-25). Installer is to have indicated the method used to demonstrate compliance with the MAH requirement by selecting the appropriate method from the drop down list. Procedures for installing MAH's are detailed in RA3.2.2.3. Selecting that the MAH cannot be installed consistent with Figure 3.2-1 may result in additional scrutiny by enforcement personnel.) If installed system does not match this entry, it can be overwritten by rater but it will be flagged as a possible fail.

Section D. Minimum System Airflow Rate Verification

1. This information is automatically calculated based on the information given in line A09. This is the target minimum system airflow required for the system being verified.
2. This information is automatically calculated based on either the CF3R-MCH-23, or CF3R-MCH-24, which documents the rater's measured airflow of the system being verified. If the measured airflow is not adequate it will not comply with the airflow requirements and refrigerant charge verification cannot be performed.

Section E. Verification of Charge Indicator Display

1. Information retrieved from CF2R-MCH-25. Rater to confirm that entry matches name shown on the list of approved devices kept by the Commission. If installed system does not match this entry, it can be overwritten by rater but it will be flagged as a possible fail.
2. Information retrieved from CF2R-MCH-25. Rater to confirm that entry matches model number shown on the list of approved devices kept by the Commission. If installed system does not match this entry, it can be overwritten by rater but it will be flagged as a possible fail.
3. The rater must confirm that the CID display module is mounted adjacent to thermostat that controls the system being verified. This requirement is detailed in Residential Appendix RA3.4.2.
4. The rater must confirm that the installed CID is approved and appears the list of approved devices kept by the Commission. This requirement is detailed in Residential Appendix RA3.4.2.
5. The rater must confirm that the system has operated for at least 15 minutes and that they system is operating within acceptable parameters as specified by the CID and equipment manufacturers. This requirement is detailed in Residential Appendix RA3.4.2.

A. System Information

HERS Rater to field-verify all system information, discrepancies to be noted by overwriting entry.

01	System Identification or Name	
02	System Location or Area Served	
03	Condenser (or package unit) make or brand	
04	Condenser (or package unit) model number	
05	Nominal Cooling Capacity (tons) of Condenser	
06	Condenser (or package unit) serial number	
07	Refrigerant Type	
08	Other Refrigerant Type (if applicable)	
09	Project Type	
10	Charge Indicator Display (CID) Status (Note: Even systems with a CID must have refrigerant charge verified by installer)	
11	Is the system of a type that the minimum airflow can be verified using an approved measurement procedure (RA3.3 or RA3.2.2.7)?	
12	Is the system of a type that approved refrigerant charge verification procedures can be used to verify compliance with the refrigerant charge verification requirements when temperatures are ≥ 55°F (RA3.2.2, or RA1)?	
13	Date of HERS Rater Refrigerant Charge Verification for this system	
14	Refrigerant charge verification method used by installer.	
15	Person who performed the Refrigerant Charge Verification reported on the Certificate of Installation:	
16	HERS Verification Compliance Requirement Status	
	Generate list for next row (this is hidden from user)	
17	Refrigerant charge verification method used by HERS Rater.	
18	determine compliance method for this document; display applicable tables below; (this row not visible to user)	

Winter Setup Charge Verification Procedure - MCH25e

- *Winter Setup for the Standard Charge Verification Procedure is specified in Reference Residential Appendix RA1.2.*

Procedures for determining Refrigerant Charge using the Standard Charge Verification Procedure are given in Reference Residential Appendix RA3.2.2.

B. System Model Applicability for Winter Setup Method – HERS Rater must verify applicability of Winter Setup Method		
01	Refrigerant metering device	
02	Winter Setup Method applicability status	
03	**The responsible person's signature on this document indicates confirmation that the installed model number is currently listed as approved for Winter Setup Method on the Energy Commission website:** http://www.energy.ca.gov/title24/2008standards/special_case_appliance/	

C. Instrument Calibration – HERS Raters are required to calibrate their diagnostic tools. Procedures for instrument calibration are given in Reference Residential Appendix RA3.2.2 and RA3.2.2.2		
01	Date of Digital Refrigerant Gauge Calibration	
02	Date of Digital Thermocouple Calibration	
03	Digital Refrigerant Gauge Calibration Status	
04	Digital Thermocouple Calibration Status	

D. Measurement Access Hole (MAH) Verification – HERS Raters are required to visually field verify MAH *Procedures for installing MAH are specified in Reference Residential Appendix RA3.2.2.3*		
01	Method used to demonstrate compliance with the Measurement Access Hole (MAH) requirement	•

E. Minimum System Airflow Rate Verification **Procedures for verifying minimum system airflow are specified in Reference Residential Appendix RA3.2.2.7.**		
01	Minimum Required System Airflow Rate (cfm)	
02	System Airflow Rate Verification Status	

F. Data Collection and Calculations – HERS Rater must independently collect all data in this section. **Procedures for determining Refrigerant Charge using the Standard Charge Verification Procedure are given in Reference Residential Appendix RA3.2.2.**		
	The responsible person's signature on this document indicates confirmation that, with a Condenser Outlet Air Restrictor installed, and after system operation was stabilized for at least 15 minutes, throughout the data collection for this verification, the difference between the liquid line pressure and suction line pressure was maintained between 160 and 220 psi for R-410A systems, or between 100 and 145 psi for R-22 systems.	
01	Lowest return air dry bulb temperature that occurred during the refrigerant charge verification procedure (degreeF)	

02	Measured Condenser air entering dry-bulb temperature ($T_{condenser, db}$)	
03	Outdoor Temperature Qualification Status	
04	Measured Liquid Line Temperature (T_{liquid}) (degreeF)	
05	Measured Liquid Line Pressure (P_{liquid}) (psig)	
06	Condenser saturation temperature ($T_{condensor, sat}$) from digital gauge or P-T Table using Line F05 (degreeF)	
07	Measured Subcooling (Line F06 – Line F04) (degreeF)	
08	Target Subcooling from Manufacturer (degreeF)	
09	Compliance Statement:	

G. Metering Device Verification– HERS Rater must independently collect all data in this section. Procedures for the verification of proper metering device operation are specified in RA3.2.2.6.2		
01	Measured Suction line temperature ($T_{suction}$) (degreeF)	
02	Measured Suction line pressure ($P_{suction}$) (psig)	
03	Evaporator saturation temperature ($T_{evaporator, sat}$) from digital gauge or P-T Table using line G02 (degreeF)	
04	Measured Superheat (Line G01 – Line G03) (degreeF)	
05	Measured Superheat (Line G04) is between 3 and 26 deg F (inclusive)	
06	Measured Superheat (Line G04) is within manufacturer's specifications, if known.	
07	Compliance Statement:	

H. Confirmation of Refrigerant Pressure Differential – HERS Rater must independently collect all data in this section Procedures for the Winter Setup are detailed in RA1.2.22		
01	P_{high}, – P_{low} (psi) from F06 and G02	
02	Compliance Statement:	

Project Name:	Enforcement Agency:	Permit Number:
Dwelling Address:	City	Zip Code

DOCUMENTATION AUTHOR'S DECLARATION STATEMENT

1. I certify that this Certificate of Verification documentation is accurate and complete.

Documentation Author Name:	Documentation Author Signature:
Company:	Date Signed:
Address:	CEA/HERS Certification Information (if applicable):
City/State/Zip:	Phone:

RESPONSIBLE PERSON'S DECLARATION STATEMENT

I certify the following under penalty of perjury, under the laws of the State of California:

1. The information provided on this Certificate of Verification is true and correct.
2. I am the certified HERS Rater who performed the verification identified and reported on this Certificate of Verification (responsible rater).
3. The installed features, materials, components, manufactured devices, or system performance diagnostic results that require HERS verification identified on this Certificate of Verification comply with the applicable requirements in Reference Appendices RA2, RA3, and the requirements specified on the Certificate of Compliance for the building approved by the enforcement agency.
4. The information reported on applicable sections of the Certificate(s) of Installation (CF2R) signed and submitted by the person(s) responsible for the construction or installation conforms to the requirements specified on the Certificate(s) of Compliance (CF1R) approved by the enforcement agency.
5. I will ensure that a registered copy of this Certificate of Verification shall be posted, or made available with the building permit(s) issued for the building, and made available to the enforcement agency for all applicable inspections. I understand that a registered copy of this Certificate of Verification is required to be included with the documentation the builder provides to the building owner at occupancy.

BUILDER OR INSTALLER INFORMATION AS SHOWN ON THE CERTIFICATE OF INSTALLATION

Company Name (Installing Subcontractor, General Contractor, or Builder/Owner):	
Responsible Builder or Installer Name:	CSLB License:

HERS PROVIDER DATA REGISTRY INFORMATION

Sample Group Number (if applicable):	Dwelling Test Status in Sample Group (if applicable)

HERS RATER INFORMATION

HERS Rater Company Name:	
Responsible Rater Name:	Responsible Rater Signature:
Responsible Rater Certification Number w/ this HERS Provider	Date Signed:

Instructions MCH-25e:

Section A. System Information

1. This information is automatically pulled from the Certificate of Installation (CF2R-MCH-25). If installed system does not match this entry, it can be overwritten by rater but it will be flagged as a possible fail.
2. This information is automatically pulled from the Certificate of Installation (CF2R-MCH-25) If installed system does not match this entry, it can be overwritten by rater but it will be flagged as a possible fail.
3. This information is automatically pulled from the Certificate of Installation (CF2R-MCH-25). If installed system does not match this entry, it can be overwritten by rater but it will be flagged as a possible fail.
4. This information is automatically pulled from the Certificate of Installation (CF2R-MCH-25) If installed system does not match this entry, it can be overwritten by rater but it will be flagged as a possible fail.
5. This information is automatically pulled from the Certificate of Installation (CF2R-MCH-25). If installed system does not match this entry, it can be overwritten by rater but it will be flagged as a possible fail.
6. This information is automatically pulled from the Certificate of Installation (CF2R-MCH-25) If installed system does not match this entry, it can be overwritten by rater but it will be flagged as a possible fail.
7. This information is automatically pulled from the Certificate of Installation (CF2R-MCH-25) If installed system does not match this entry, it can be overwritten by rater but it will be flagged as a possible fail.
8. This information is automatically pulled from the Certificate of Installation (CF2R-MCH-25). If "Other" is chosen in Row A07, then installer will indicate the type of refrigerant being used. If R-22 or R-410A is being used (regardless of trade name, Puron, Genetron, etc.) it should be indicated in Row A07, not here. This row is only for refrigerants other than R-22 and R-410a. Documentation of other refrigerants should be requested. If installed system does not match this entry, it can be overwritten by rater but it will be flagged as a possible fail.
9. This information is automatically pulled from the Certificate of Installation (CF2R-MCH-25). These are defined in detail the Residential Compliance Manual. If installed system does not match this entry, it can be overwritten by rater but it will be flagged as a possible fail.
10. This information is automatically pulled from the Certificate of Installation (CF2R-MCH-25). Installer is to select the appropriate choice regarding whether this system has a Charge Indicator Display (CID). Qualifying CID's may exempt a system from HERS refrigerant charge verification. CID's are described in Joint Appendix JA6.1. Qualfying CID's must appear on a list of approved devices kept by the Commission. If installed system does not match the description here, it fails.
11. This information is automatically pulled from the Certificate of Installation (CF2R-MCH-25). Most ducted split systems and package systems are of the type that minimum airflow can be verified using an approved measurement procedure. Examples of systems that do not meet this description are ductless systems. Selecting "No" here may subject the project to additional scrutiny by enforcement personnel.
12. This information is automatically pulled from the Certificate of Installation (CF2R-MCH-25) Most ducted split systems and package systems are of the type that approved refrigerant charge verification procedures detailed in Residential Appendix RA3.2.2 or RA1 can be used (i.e., Standard Charge Verification or Winter Setup Verification procedures). Examples of systems that may not meet this description are "mini splits" or variable refrigerant flow systems that may only be charged using weigh-in procedures. Selecting "No" here may subject the project to additional scrutiny.
13. HERS rater to input date of refrigerant charge verification.

14. This information is automatically pulled from the Certificate of Installation (CF2R-MCH-25). The installer is to have select the refrigerant charge verification method used from the choices provided:
    - Superheat (outdoor temperature must be ≥ 55 degF); This verification method can only be used when the outdoor temperature is at or above 55 degF. It is only used on systems with fixed orifice refrigerant metering devices (non-variable metering devices). This method is detailed in Reference Appendix RA3.2.2.6.1. Systems verified using this method may be eligible for HERS verification compliance using sampling. Choosing this option will generate a CF2R-MCH-25a.
    - Subcooling (outdoor temperature must be ≥ 55 degF); This verification method can only be used when the outdoor temperature is at or above 55 degF. It is only used on systems with variable metering devices (TXV or EXV). This method is detailed in Reference Appendix RA3.2.2.6.2. Systems verified using this method may be eligible for HERS verification compliance using sampling. Choosing this option will generate a CF2R-MCH-25b.
    - Weigh-in; This verification method can be used at any outdoor temperature allowed by the equipment manufacturer. This method is detailed in Reference Appendix RA3.2.3. Systems verified using this method are NOT eligible for HERS verification compliance using Group Sampling. Choosing this option will generate a CF2R-MCH-25c.
    - Winter Setup (applicable when outdoor temperature is < 55 degF); The Winter Setup verification method is a special version of the Subcooling method. It can be used when the outdoor temperature is between 37 and 55 degF. It can only be used on equipment where the manufacturer has specifically approved it for the equipment being tested. The Winter Setup procedure is details in Residential Appendix RA1.2. Choosing this option will generate a CF2R-MCH-25e.
    - New Package Unit Factory Charge; Choose this option when a new package unit is being installed that has an AHRI rating. This helps ensure that the unit was properly charged at the factory. HERS verification of refrigerant charge may not be required in this case. Choosing this option will generate a CF2R-MCH-25f.
15. This information is automatically pulled from the Certificate of Installation (CF2R-MCH-25). The installer (or rater) is to have identified who performed the verification that is documented on the Certificate of Installation. Note that HERS verification compliance by Group Sampling requires that the installer perform their own refrigerant charge verification as part of the installation of the equipment prior to the system being put into a sample group for possible selection by a HERS rater for verification. If Group Sampling is not intended, the HERS Rater may perform the refrigerant charge verification on behalf of the Installing Contractor (applies to any method but Weigh-In) and the Rater will enter same results on both the CF2R and CF3R.
16. This information is automatically pulled from the Certificate of Installation (CF2R-MCH-25). The Group Sampling status is automatically displayed based on the input results of Row A14 and Row A15 on the CF2R. Group Sampling procedures are detailed Residential Appendix RA2.3.
17. Specify the refrigerant charge verification used by the rater. Choices vary depending on what method was specified in Row A14.

Section B. System Model Applicability for Winter Setup Method

1. This information is automatically pulled from the Certificate of Installation (CF2R-MCH-25). Installer is to have selected the correct metering device used on the system being verified. This will check against the refrigerant charge verification method selected in Row A14. An error message will appear in Row

B02 if the wrong verification method may has been selected. Winter Setup verification can only be used on systems with variable metering devices (TXV or EXV). If installed system does not match this entry, it can be overwritten by rater but it will be flagged as a possible fail.

2. This box is automatically filled out. Winter Setup verification can only be used on systems with variable metering devices (TXV or EXV).
3. Rater must verify that the system being tested appears on the list of approved equipment for Winter Setup Method.

Section C. Instrument Calibration

1. Enter the date of most recent Digital Refrigerant Gauge Calibration Field Check by rater. Analog gauges are not allowed for verification purposes under the 2013 Standards. Specification for pressure gauges is found in Residential Appendix RA3.2.2.2.3. Procedures for the field check procedure are detailed in RA3.2.2.4.2. Calibration field check must happen at least once every 30 days.
2. Enter the date of the most recent Digital Thermocouple Calibration by rater. Specifications for thermocouples and temperature sensors can be found in Residential Appendix RA3.2.2.2.2. Procedures for calibration are detailed in RA3.2.2.4.1. Calibration must happen at least once every 30 days.
3. Digital Refrigerant Gauge Calibration status will appear automatically. If the date entered in Row C01 is more than 30 days prior to date of verification this row will indicate that calibration is required and you will not be allowed to continue filling out this document.
4. Digital Thermocouple Calibration status will appear automatically. If the date entered in Row C02 is more than 30 days prior to date of verification this row will indicate that calibration is required and you will not be allowed to continue filling out this document.

Section D. Measurement Access Hole (MAH) Verification

1. This information is automatically pulled from the Certificate of Installation (CF2R-MCH-25). Installer is to have indicated the method used to demonstrate compliance with the MAH requirement by selecting the appropriate method from the drop down list. Procedures for installing MAH's are detailed in RA3.2.2.3. Selecting that the MAH cannot be installed consistent with Figure 3.2-1 may result in additional scrutiny by enforcement personnel.) If installed system does not match this entry, it can be overwritten by rater but it will be flagged as a possible fail.

Section E. Minimum System Airflow Rate Verification

1. This information is automatically calculated based on the information given in line A09. This is the target minimum system airflow required for the system being verified.
2. This information is automatically calculated based on either the CF3R-MCH-23, or CF3R-MCH-24, which documents the rater's measured airflow of the system being verified. If the measured airflow is not adequate it will not comply with the airflow requirements and refrigerant charge verification cannot be performed.

Section F. Subcooling Charge Verification Method – Data Collection

1. The Rater must independently collect this data. Measure and record the lowest return air dry-bulb temperature that occurred during the refrigerant charge procedure in degrees F. This temperature must remain above 70 degF during the verification procedure. This requirement is detailed in Residential Appendix RA3.2.2.5.
2. The Rater must independently collect this data. Measure and record the condenser air dry-bulb temperature ($T_{condenser}$) in degrees F. This value must be at least 55 degF and no more than 115 degF to use the Subcooling Charge Verification Method.
3. If a value less than 55 degF or greater than 115 degF is entered in Row F02 the Subcooling Method cannot be used.
4. The Rater must independently collect this data. Measure and record the liquid line temperature (T_{liquid}) in degrees F. This procedure is detailed in RA3.2.2.5. This value is used to calculate the measured subcool temperature.
5. The Rater must independently collect this data. Measure and record the liquid line pressure (P_{liquid}) in psig. This procedure is detailed in RA3.2.2.5. This value is used to determine the condenser saturation temperature ($T_{condenser,sat}$) from a pressure temperature chart for the appropriate refrigerant (can be internal to a digital gauge), which is entered into Row F06.
6. Enter the condenser saturation temperature ($T_{condenser,sat}$) from the digital gauge or a separate pressure-temperature chart that corresponds to the liquid line pressure entered in Row F05, in degrees F.
7. Measured Subcooling is automatically calculated as the difference between the liquid line temperature (Row F04) and the condenser saturation temperature (Row F06)
8. The Rater must independently collect this data. Enter target subcooling from manufacturer. This may be a challenge to find for older equipment. Internet searches can sometimes result in archived equipment specifications for the equipment in question, or sometimes a very similar model. If the manufacturer's target cannot be found the Commission's Executive Director may provide additional guidance for compliance.
9. System passes Subcooling method when Row F08 is within plus or minus 5 degrees of Row F07.

Section G. Metering Device Verification

1. The Rater must independently collect this data. Measure and record the suction line temperature ($T_{suction}$) in degrees F. This procedure is detailed in RA3.2.2.5. This value is used to calculate the measured superheat.
2. The Rater must independently collect this data. Measure and record the suction line pressure ($P_{suction}$) in psig. This procedure is detailed in RA3.2.2.5. This value is used to determine the evaporator saturation temperature ($T_{evaporator,sat}$) from a pressure temperature chart for the appropriate refrigerant (can be internal to a digital gauge), which is entered into Row G03.
3. Enter the evaporator saturation temperature ($T_{evaporator,sat}$) from the digital gauge or a separate pressure-temperature chart that corresponds to the suction line pressure entered in Row G02, in degrees F.
4. Measured superheat is automatically calculated as the difference between the suction line temperature (Row G01) and the evaporator saturation temperature (Row G03)
5. There are two possible criteria for passing. If the manufacturer's specification is known it should be used, otherwise the CEC requirement is that the superheat be between 4 and 25 degF, inclusive. This row checks the CEC requirement.

6. If the manufacturer's target superheat for ensuring proper metering device operation is known, it supersedes the CEC requirement of being between 4 and 25 degF. If "Yes, documentation to be provided upon request." is selected, the installer should be prepared to provide documentation for the target values used.
7. There are two possible criteria for passing. If the manufacturer's specification is known it should be used, otherwise the CEC requirement is that the superheat be between 4 and 25 degF, inclusive. If "Yes, documentation to be provided upon request." is selected in Row G06, the installer should be prepared to provide documentation for the target values used.

Section H. Confirmati0n of Refrigerant Pressure Differential.

1. This box is automatically filled out. It verifies that the correct refrigerant pressure was maintained.
2. This box is automatically filled out. It verifies that the correct refrigerant pressure was maintained. With a Condenser Outlet Air Restrictor installed, and after system operation was stabilized for at least 15 minutes, throughout the data collection for this verification, the difference between the liquid line pressure and suction line pressure must be maintained between 160 and 220 psi for R-410A systems, or between 100 and 145 psi for R-22 systems. If not an error message will appear here.

VERIFICATION OF HIGH SEER & EER EQUIPMENT

CERTIFICATE OF VERIFICATION		CF3R-MCH-26-H
Verification of High SEER &EER Equipment		(Page 1 of 2)
Project Name:	Enforcement Agency:	Permit Number:
Dwelling Address:	City	Zip Code

Procedures for verification of High SEER and EER Equipment are described in Reference Appendix RA3.4. Each HVAC system requiring verification must use a separate form.

A. System Information			
01	Required SEER from the CF1R Report. If SEER verification not required mark N/A.	**SEER**	
02	Required EER from the CF1R Report. If EER verification not required mark N/A.	**EER**	
03	System Name or Identification/Tag		
04	System Location or Area Served		
05	List AHRI certification number for the installed air conditioning equipment from http://www.ahridirectory.org		
06	Outdoor Condenser - Installed Manufacturer Name (auto filled from MECH-1)		
07	Outdoor Condenser - Installed Model Number (auto filled from MECH-1)		
08	Outdoor Condenser - Installed Serial Number (auto filled from MECH-1)		
09	Inside Coil - Installed Manufacture Name (auto filled from MECH-1)		
10	Inside Coil - Installed Model Number (auto filled from MECH-1)		
11	Inside Coil - Installed Serial Number (auto filled from MECH-1)		
12	Air Handler/Furnace - Installed Manufacture Name (auto filled from MECH-1)		
13	Air Handler/Furnace - Installed Model Number (auto filled from MECH-1)		
14	Air Handler/Furnace - Installed Serial Number (auto filled from MECH-1)		

B. Verified Cooling System Efficiency - SEER					
15	SEER listed on AHRI Certification (line 05) or NA if not required by CF1R			**SEER**	
16	☐Yes	☐No	Is the AHRI certified SEER (line 15) the same or better than required by the CF1R (line 1)		
17	☐Yes	☐No	Are the Manufacturer Names and Model Numbers listed on the AHRI certification from line 05 the same as what was installed?		
18	☐Yes	☐No	Are the Manufacturer Names and Model Numbers listed on the AHRI certification from line 05 the same as what is listed on line 06, 07, 09, and 10?		
Compliance Statement					

C. Verified Cooling System Efficiency - EER					
19	EER listed on AHRI Certification (line 05) or NA if not required by CF1R			**EER**	
20	☐Yes	☐No	Is the AHRI certified EER (line 19) the same or better than required by the CF1R (line 2)		
21	☐Yes	☐No	Are the Manufacturer Names and Model Numbers listed on the AHRI certification from line 05 the same as what was installed?		
22	☐Yes	☐No	Are the Manufacturer Names and Model Numbers listed on the AHRI certification from line 05 the same as what is listed on line 06, 07, 09, and 10?		
Compliance Statement					

D. Verified Cooling System Efficiency - Furnace			
23	☐Yes	☐No	Is Furnace make and model Included in the AHRI certification from line 05?
24	☐Yes	☐No	Are the Manufacturer Names and Model Numbers listed on the AHRI certification from line 05 the same as what was installed?
25	☐Yes	☐No	Are the Manufacturer Names and Model Numbers listed on the AHRI certification from line 05 the same as what is listed on line 10 and 11?
Compliance Statement			

For information and data collection only. Not valid until registered with a HERS provider

CERTIFICATE OF VERIFICATION		CF3R-MCH-26-H
Verification of High SEER &EER Equipment		(Page 2 of 2)
Project Name:	Enforcement Agency:	Permit Number:
Dwelling Address:	City	Zip Code

E. Verified Cooling System Efficiency - Time Delay			
26	☐Yes	☐No	Is time delay included in the AHRI certification from line 05?
27	☐Yes	☐No	If Yes is has the time delay been tested in the field and is functioning correctly?
Compliance Statement			

F. Verified Cooling System Efficiency - TXV			
28	☐Yes	☐No	Is a TXV included in the AHRI certification from line 05?
29	☐Yes	☐No	If Yes has the TXV been installed per manufacturer instructions and the expansion valve is in full contact with suction line, is tightly installed with a metal clamp, is placed in the proper orientation and is fully covered with insulation?
Compliance Statement			

DOCUMENTATION AUTHOR'S DECLARATION STATEMENT

1. I certify that this Certificate of Verification documentation is accurate and complete.

Documentation Author Name:	Documentation Author Signature:
Company:	Date Signed:
Address:	CEA/HERS Certification Information (if applicable):
City/State/Zip:	Phone:

RESPONSIBLE PERSON'S DECLARATION STATEMENT

I certify the following under penalty of perjury, under the laws of the State of California:

1. The information provided on this Certificate of Verification is true and correct.
2. I am the certified HERS Rater who performed the verification identified and reported on this Certificate of Verification (responsible rater).
3. The installed features, materials, components, manufactured devices, or system performance diagnostic results that require HERS verification identified on this Certificate of Verification comply with the applicable requirements in Reference Appendices RA2, RA3, and the requirements specified on the Certificate of Compliance for the building approved by the enforcement agency.
4. The information reported on applicable sections of the Certificate(s) of Installation (CF2R) signed and submitted by the person(s) responsible for the construction or installation conforms to the requirements specified on the Certificate(s) of Compliance (CF1R) approved by the enforcement agency.
5. I will ensure that a registered copy of this Certificate of Verification shall be posted, or made available with the building permit(s) issued for the building, and made available to the enforcement agency for all applicable inspections. I understand that a registered copy of this Certificate of Verification is required to be included with the documentation the builder provides to the building owner at occupancy.

BUILDER OR INSTALLER INFORMATION AS SHOWN ON THE CERTIFICATE OF INSTALLATION

Company Name (Installing Subcontractor, General Contractor, or Builder/Owner):	
Responsible Builder or Installer Name:	CSLB License:

HERS PROVIDER DATA REGISTRY INFORMATION

Sample Group Number (if applicable):	Dwelling Test Status in Sample Group (if applicable)

HERS RATER INFORMATION

HERS Rater Company Name:	
Responsible Rater Name:	Responsible Rater Signature:
Responsible Rater Certification Number w/ this HERS Provider	Date Signed:

For information and data collection only. Not valid until registered with a HERS provider

User Instructions for Completing the MECH-26

A. System Information

1. If SEER is required on the CF1R then enter the required value here. It will be imported from the CF1R. If SEER verification not required by CF1R then NA will be auto filled in line 1.
2. If EER is required on the CF1R then enter the required value here. It will be imported from the CF1R. If EER verification not required by CF1R then NA will be auto filled in line 2.
3. System Name or Identification/Tag – Imported from the MECH-01; provide an identification name or tag name that uniquely identifies the duct system. If there is a mechanical plan for the system, the tag name may be given on the plans.
4. System Location or Area Served - Imported from the MECH-01; provide a brief description of the area served by the duct system (e.g. upstairs; downstairs).
5. List AHRI certification number for the installed cooling system from http://www.ahridirectory.org– The installer must use equipment listed with AHRI. Equipment listed under this AHRI number must be used in the installation.
6. List the installed outdoor condenser Manufacture Name. This will be auto filled from the MECH-01.
7. List the installed outdoor condenser Model Number. This will be auto filled from the MECH-01.
8. List the installed outdoor condenser Serial Number. This will be auto filled from the MECH-01.
9. List the installed indoor coil Manufacture Name. This will be auto filled from the MECH-01.
10. List the installed indoor coil Model Number. This will be auto filled from the MECH-01.
11. List the installed indoor coil Serial Number. This will be auto filled from the MECH-01.
12. List the installed air handler/furnace Manufacture Name. This will be auto filled from the MECH-01.
13. List the installed air handler/furnace coil Model Number. This will be auto filled from the MECH-01.
14. List the installed air handler/furnace Serial Number. This will be auto filled from the MECH-01.

B. Verified Cooling System Efficiency - SEER

15. Enter the EER rating from the AHRI certificate from line 05 or NA of not required by CF1R.
16. The AHRI certified SEER (line 05) must be the same or better than required by the CF1R (line 01). If this is correct then mark Yes. Online form will auto fill.
17. The Manufacturer Names and Model Numbers listed on the AHRI certification from line 05 must be the same as what was installed. Mark Yes if this statement is correct.
18. The Manufacturer Names and Model Numbers listed on the AHRI certification from line 05 must be the same as what is listed on line 06, 07, 09, and 10. Mark Yes if this statement is correct.

Compliance Statement – If line 15 is NA then print SEER VERIFICATION NOT REQUIRED, or
– PASS if line 16, 17, and 18 are Yes, or
– If line 16, 17, or 18 is No, then installer must fix system to proceed.

C. Verified Cooling System Efficiency - EER

19. Enter the EER rating from the AHRI certificate from line 05 or NA of not required by CF1R
20. The AHRI certified EER (line 19) must be the same or better than required by the CF1R (line 02). If this is correct then mark Yes. Online form will auto fill.
21. The Manufacturer Names and Model Numbers listed on the AHRI certification from line 05 must be the same as what was installed. Mark Yes if this statement is correct.
22. The Manufacturer Names and Model Numbers listed on the AHRI certification from line 05 must be the same as what is listed on line 06, 07, 09, and 10. Mark Yes if this statement is correct.

Compliance Statement – If line 19 is NA then print EER VERIFICATION NOT REQUIRED, or
– PASS if line 20, 21, and 22 is Yes, or
– If line 20, 21, or 22 is No then installer must fix system to proceed.

D. Verified Cooling System Efficiency - Furnace

23. Some AHRI certifications require the air handler/furnace to be included in the certification number. If an air handler/furnace is listed with the AHRI certification number then check the yes box. If not required check the no box.
24. The Manufacturer Names and Model Numbers listed on the AHRI certification from line 05 the same as what was installed. Mark Yes if this statement is correct.
25. The Manufacturer Names and Model Numbers listed on the AHRI certification from line 05 must be the same as what is listed on line 12, and 13. Mark Yes if this statement is correct.

Compliance Statement – FURNICE VERIFICATION NOT REQUIRED if No box checked on line 23, or
– PASS if line 24 and 25 is Yes, or
– If line 24 or 25 is No then installer must fix system to proceed.

For information and data collection only, not valid until registered with a HERS provider

E. Verified Cooling System Efficiency - Time Delay

26. Some AHRI certifications require that a time delay be installed. If the certification from line 05 requires time delay then check the yes box. If not required check the no box.
27. If Yes in line 26 the time delay has been tested in the field and is functioning correctly? To verify the time delay is function properly the following is required.
    a. Turn the thermostat down until the compressor and indoor fan are both running.
    b. Turn the thermostat up so the compressor stops running.
    c. Verify that the indoor fan continues to run for at least 30 seconds.

Compliance Statement – TIME DELAY VERIFICATION NOT REQUIRED if No box was checked line 26, or
- PASS if line 27 is Yes, or
- If line 27 is No then installer must fix system to proceed.

F. Verified Cooling System Efficiency - TXV

28. Some AHRI certifications require that a TXV be installed. If the certification from line 05 requires TXV then check the yes box. If not required check the no box.
29. If Yes in line 28 the TXV has been installed per manufacturer instructions and the expansion valve is in full contact with suction line, is tightly installed with a metal clamp, is placed in the proper orientation and is fully covered with insulation.

Compliance Statement – TXV NOT REQUIRED if No box was checked line 28, or
- PASS if line 29 is Yes, or
- If line 29 is No then installer must fix system to proceed.

01 <<calculated field: reference seer requirement from the CF1R>>
02 <<calculated field: reference seer requirement from the CF1R>>

For information and data collection only. Not valid until registered with a HERS provider

INDOOR AIR QUALITY AND MECHANICAL VENTILATION

CERTIFICATE OF VERIFICATION		CF3R-MCH-27a-H
Indoor Air Quality and Mechanical Ventilation		(Page 1 of 5)
Project Name:	Enforcement Agency:	Permit Number:
Dwelling Address:	City	Zip Code

Title 24, Part 6, Section 150.0(o) **Ventilation for Indoor Air Quality.** All dwelling units shall meet the requirements of ANSI/ASHRAE Standard 62.2 Ventilation and Acceptable Indoor Air Quality in Low-Rise Residential Buildings. ***Equation and table numbering on this compliance document corresponds to the numbering for that information in the published ANSI/ASHRAE Standard 62.2-2010.***

A. Dwelling Mechanical Ventilation - General Information		
01	Building Type	
02	Conditioned floor area of dwelling unit	
03	Number of bedrooms in dwelling unit	
04	Ventilation Operation Schedule	
05	Whole-Building Ventilation Rate Calculation Method.	
06	Whole Building Ventilation System Type	
07	determine compliance method for this document; display applicable tables below; (this row not visible to user)	

27a - Continuous Ventilation Airflow - Fan Vent Rate Method

B. Whole-Building Continuous Ventilation - Fan Ventilation Rate Method - A mechanical supply system, exhaust system, or combination thereof shall provide whole-building ventilation with outdoor air each hour at no less than the rate in equation 4.1a.		
01	Required Continuous Whole-Building Ventilation Rate (Q_{fan})	
02	Installed Continuous Whole-Building Ventilation Rate	

C. Compliance Statement

For information and data collection only. Not valid until registered with a HERS provider

CERTIFICATE OF VERIFICATION		CF3R-MCH-27a-H
Indoor Air Quality and Mechanical Ventilation		(Page 2 of 5)
Project Name:	Enforcement Agency:	Permit Number:
Dwelling Address:	City	Zip Code

D. Local Mechanical Exhaust System – Fan selection and duct design criteria for compliance

Local mechanical exhaust fans shall be installed in each kitchen and bathroom. Delivered local ventilation rates:

- **All local ventilation rates have been measured using a flow hood, flow grid, or other airflow measuring device and meet the requirements of 62.2 Tables 5.1 or 5.2. OR**
- **The airflow rating at a pressure of 0.25 in. w.c. of a certified fan is assumed because the local ventilation system duct sizing meets the prescriptive requirements of 62.2 Table 5.3, or manufacturer's design criteria.**

Table 5.1
Intermittent Local Ventilation Exhaust Airflow Rates

Application	Airflow	Notes
Kitchen	100 cfm	
Bathroom	50 cfm	

Table 5.2
Continuous Local Ventilation Exhaust Airflow Rates

Application	Airflow	Notes
Kitchen	5 ACH	
Bathroom	20 cfm	

Table 5.3
Prescriptive Duct Sizing Requirements

Diameter, (in)	Flex Duct				Smooth Duct			
Fan Rating cfm @ 0.25 in. w.g.	50	80	100	125	50	80	100	125
	Maximum Allowable Duct Length (ft)							
Diameter, (in)	Flex Duct				Smooth Duct			
3	X	X	X	X	5	X	X	X
4	70	3	X	X	105	35	5	X
5	NL	70	35	20	NL	135	85	55
6	NL	NL	125	95	NL	NL	NL	145
7 and above	NL	NL	NL	NL	NL	NL	NL	NL

This table assumes no elbows. Deduct 15 ft of allowable duct length for each turn, elbow, or fitting. Interpolation and extrapolation in 62.2 Table 5.3 is not allowed. For airflow values not listed, use the next higher value. This table is not applicable for airflow > 125 cfm.
NL = no limit on duct length of this size.
X = not allowed, any length of duct of this size with assumed turns, elbows, fittings will exceed the rated pressure drop.

The responsible person's signature on this document indicates that the installation meets the applicable requirements specified in Table D – Local Mechanical Exhaust System.

For information and data collection only. Not valid until registered with a HERS provider

CERTIFICATE OF VERIFICATION		CF3R-MCH-27a-H
Indoor Air Quality and Mechanical Ventilation		(Page 3 of 5)
Project Name:	Enforcement Agency:	Permit Number:
Dwelling Address:	City	Zip Code

E. Other Requirements	
The items listed below (6.1 through 6.8) correspond to the information given in ASHRAE 62.2 Section 6 "Other Requirements". Refer also to Chapter 4.6 of the Residential Compliance Manual (Section 4.6.5) for information describing these "Other Requirements". The signature of the Responsible Person in the declaration statement below certifies that the building complies with these requirements specified in ASHRAE 62.2 Section 6.1 through 6.9 if applicable.	
01	**6.1 Transfer Air** = <<Measures shall be taken to minimize air movement across envelope components to occupiable spaces from garages, unconditioned crawl spaces, and unconditioned attics. Supply and balanced ventilation systems shall be designed and constructed to provide ventilation air directly from the outdoors>>
02	**6.2 Instructions and Labeling** = <<Information on the ventilation design and/or ventilation systems installed, instructions on their proper operation to meet the requirements of this standard, and instructions detailing any required maintenance (similar to that provided for HVAC systems) shall be provided to the owner and the occupant of the dwelling unit. Controls shall be labeled as to their function (unless that function is obvious, such as toilet exhaust fan switches). See Chapter 13 of Guideline 24[2] for information on instructions and labeling>>
03	**6.3 Cloths Dryers** = <<Clothes dryers shall be exhausted directly to the outdoors>>
04	**6.4 Combustion and solid-fuel burning appliances** = << Combustion and solid-fuel burning appliances must be provided with adequate combustion and ventilation air and vented in accordance with manufacturer's installation instructions, NFPA 54/ANSI Z223.1, National Fuel Gas Code, NFPA 31, Standard for the Installation of Oil-Burning Equipment, or NFPA 211, Standard for Chimneys, Fireplaces, Vents, and Solid-Fuel Burning Appliances, or other equivalent code acceptable to the building official. Where atmospherically vented combustion appliances or solid-fuel burning appliances are located inside the pressure boundary, the total net exhaust flow of the two largest exhaust fans (not including a summer cooling fan intended to be operated only when windows or other air inlets are open) shall not exceed 15 cfm/100 ft² (75 Lps/100 m^2) of occupiable space when in operation at full capacity. If the designed total net flow exceeds this limit, the net exhaust flow must be reduced by reducing the exhaust flow or providing compensating outdoor airflow. Atmospherically vented combustion appliances do not include direct-vent appliances.>>
05	**6.5 Garages** = <<When an occupiable space adjoins a garage, the design must prevent migration of contaminants to the adjoining occupiable space. Air seal the walls, ceilings, and floors that separate garages from occupiable space. To be considered air sealed, all joints, seams, penetrations, openings between door assemblies and their respective jambs and framing, and other sources of air leakage through wall and ceiling assemblies separating the garage from the residence and its attic area shall be caulked, gasketed, weather stripped, wrapped, or otherwise sealed to limit air movement. Doors between garages and occupiable spaces shall be gasketed or made substantially airtight with weather stripping>>
06	**6.6 Ventilation Opening Area** = <<Spaces shall have ventilation openings as listed below. Such openings shall meet the requirements of Section 6.8>>
07	**6.7 Minimum filtration** = <<Mechanical systems that supply air to an occupiable space through ductwork exceeding 10 ft (3 m) in length and through a thermal conditioning component, except evaporative coolers, shall be provided with a filter having a designated minimum efficiency of MERV 6, or better, when tested in accordance with ANSI/ASHRAE Standard 52.2, Method of Testing General Ventilation Air-Cleaning Devices for Removal Efficiency by Particle Size, or a minimum Particle Size Efficiency of 50% in the 3.0-10 µm range in accordance with AHRI Standard 680, Performance Rating of Residential Air Filter Equipment. The system shall be designed such that all recirculated and mechanically supplied outdoor air is filtered before passing through the thermal conditioning components. The filter shall be located and installed in such a manner as to facilitate access and regular service by the owner>>
08	**6.8 Air Inlets** = <<Air inlets that are part of the ventilation design shall be located a minimum of 10 ft (3 m) from known sources of contamination such as a stack, vent, exhaust hood, or vehicle exhaust. The intake shall be placed so that entering air is not obstructed by snow, plantings, or other material. Forced air inlets shall be provided with rodent/insect screens (mesh not larger than 1/2 inch)>>
09	**6.9 Carbon Monoxide Detectors** = << A carbon monoxide alarm shall be installed in each dwelling unit in accordance with NFPA 720, *Standard for the Installation of Carbon Monoxide (CO) Detection and Warning Equipment*14, and shall be consistent with requirements of applicable laws, codes, and standards.add brief description>>
The responsible person's signature on this document indicates that the installation meets the applicable requirements specified in Table E – Other Requirements.	

For information only. Data collection only. Not valid until reviewed with a HERS Provider

F. Air Moving Equipment	
The items listed below (7.1 through 7.3) correspond to the information given in ASHRAE 62.2 Section 7 "Air-Moving Equipment". Refer also to Chapter 4.6 of the Residential Compliance Manual (Section 4.6.6) for information describing these requirements in more detail. The signature of the Responsible Person in the declaration statement below certifies that the building complies with these requirements specified in ASHRAE 62.2 Section 7.1 through 7.3 if applicable.	
01	**7.1 Selection and Installation.** Ventilation devices and equipment shall be tested and listed in accordance with specific standards. Installations of systems or equipment shall be carried out in accordance with manufacturers' design requirements and installation instructions.
02	**7.2 Sound Ratings for Fans.** Ventilation fans shall be rated for sound at no less than the minimum airflow rate required by this standard, as noted below. These sound ratings shall be at a minimum of 0.1 in. w.c. (25 Pa) static pressure. 7.2.1 **Whole-Building or Continuous Ventilation Fans.** These fans shall be rated for sound at a maximum of 1.0 sone. 7.2.2 **Intermittent Local Exhaust Fans.** Fans used to comply with Section 5.2 shall be rated for sound at a maximum of 3 sone, unless their maximum rated airflow exceeds 400 cfm (200 L/s). (Some exceptions may apply.)
03	**7.3 Multibranch Exhaust Ducting.** If more than one of the exhaust fans in a dwelling unit shares a common exhaust duct, each fan shall be equipped with a back-draft damper to prevent the recirculation of exhaust air from one room to another through the exhaust ducting system.
The responsible person's signature on this document indicates that the installation meets the applicable requirements specified in Table F – Air Moving Equipment.	

G. Multifamily Buildings - Other Requirements <<only print this section if multi-family is selected in row A.1>>	
The items listed below correspond to the information given in ASHRAE 62.2 Section 8 "Multifamily Buildings". Refer also to Chapter 4.6 of the Residential Compliance Manual (Section 4.6.5) for information describing these requirements in more detail. The signature of the Responsible Person in the declaration statement below certifies that the building complies with these requirements specified in ASHRAE 62.2 Section 8, if applicable.	
01	**8.4.1 Transfer Air.** Measures shall be taken to minimize air movement across envelope components separating dwelling units, including sealing penetrations in the common walls, ceilings, and floors of each unit and by sealing vertical chases adjacent to the units. All doors between dwelling units and common hallways shall be gasketed or made substantially airtight. **8.4.1.1 Compliance.** One method of demonstrating compliance with Section 8.4.1 shall be to verify a leakage rate below a maximum of 0.2 cfm per ft^2 (100 L/s per 100 m^2) of the dwelling unit envelope area (i.e., the sum of the area of the walls between dwelling units, exterior walls, ceiling and floor) at a test pressure of 50 Pa by a blower door test. The test shall be conducted with the dwelling unit as if it were exposed to outdoor air on all sides, top, and bottom by opening doors and windows of adjacent dwelling units.
The responsible person's signature on this document indicates that the installation meets the applicable requirements specified in Table G – Multifamily Buildings	

For information and data collection only. Not valid until registered with a HERS provider

CERTIFICATE OF VERIFICATION		CF3R-MCH-27a-H
Indoor Air Quality and Mechanical Ventilation		(Page 5 of 5)
Project Name:	Enforcement Agency:	Permit Number:
Dwelling Address:	City	Zip Code

DOCUMENTATION AUTHOR'S DECLARATION STATEMENT	
1. I certify that this Certificate of Verification documentation is accurate and complete.	
Documentation Author Name:	Documentation Author Signature:
Company:	Date Signed:
Address:	CEA/HERS Certification Information (if applicable):
City/State/Zip:	Phone:

RESPONSIBLE PERSON'S DECLARATION STATEMENT

I certify the following under penalty of perjury, under the laws of the State of California:

1. The information provided on this Certificate of Verification is true and correct.
2. I am the certified HERS Rater who performed the verification identified and reported on this Certificate of Verification (responsible rater).
3. The installed features, materials, components, manufactured devices, or system performance diagnostic results that require HERS verification identified on this Certificate of Verification comply with the applicable requirements in Reference Appendices RA2, RA3, and the requirements specified on the Certificate of Compliance for the building approved by the enforcement agency.
4. The information reported on applicable sections of the Certificate(s) of Installation (CF2R) signed and submitted by the person(s) responsible for the construction or installation conforms to the requirements specified on the Certificate(s) of Compliance (CF1R) approved by the enforcement agency.
5. I will ensure that a registered copy of this Certificate of Verification shall be posted, or made available with the building permit(s) issued for the building, and made available to the enforcement agency for all applicable inspections. I understand that a registered copy of this Certificate of Verification is required to be included with the documentation the builder provides to the building owner at occupancy.

For information and data collection only. Not valid until registered with a HERS Provider

BUILDER OR INSTALLER INFORMATION AS SHOWN ON THE CERTIFICATE OF INSTALLATION	
Company Name (Installing Subcontractor, General Contractor, or Builder/Owner):	
Responsible Builder or Installer Name:	CSLB License:

HERS PROVIDER DATA REGISTRY INFORMATION	
Sample Group Number (if applicable):	Dwelling Test Status in Sample Group (if applicable)

HERS RATER INFORMATION	
HERS Rater Company Name:	
Responsible Rater Name:	Responsible Rater Signature:
Responsible Rater Certification Number w/ this HERS Provider	Date Signed:

User Instructions – MCH-27a:

Section A. General Information

1 This information is automatically pulled from the CF-2R-MCH-27a. If building type does not match this entry, it can be overwritten by rater but it will be flagged as a possible fail. Choices are "single family" and "low-rise multifamily"

2 This information is automatically pulled from the CF-2R-MCH-27a. If conditioned floor area does not match this entry, it can be overwritten by rater but it will be flagged as a possible fail. Value to be entered in the field equals the conditioned floor area of the space, in square feet.

3 This information is automatically pulled from the CF-2R-MCH-27a. If number of bedrooms not match this entry, it can be overwritten by rater but it will be flagged as a possible fail. Value to be entered in the field equals the number of bedrooms in the home.

4 This information is automatically pulled from the CF-2R-MCH-27a. If ventilation operation schedule does not match this entry, it can be overwritten by rater from list but it will be flagged as a possible fail. Select the Ventilation Operation Schedule method used from the choices provided:

- Continuous
- Intermittent

5 This information is automatically pulled from the CF-2R-MCH-27a. If whole-building ventilation rate calculation method does not match this entry, it can be overwritten by rater from list but it will be flagged as a possible fail. Select the Whole Building Ventilation Rate Calculation Method from the choices provided:

- Fan Ventilation Rate Method
- Total Ventilation Rate Method

6 This information is automatically pulled from the CF-2R-MCH-27a. If whole-building ventilation system type does not match this entry, it can be overwritten by rater from list but it will be flagged as a possible fail. Select the Whole Building Ventilation System Type from the choices provided:

- Standalone - Exhaust
- Standalone - Supply
- Standalone - Balanced

Section B. Whole Building Continuous Ventilation – Fan Ventilation Rate Method

1 This value is automatically calculated using equation 4.1a. The equation used to calculate this value in the field equals:

a. If A01= Single Family then [(0.01 x conditioned floor area A02) + 7.5(Number of bedrooms A03 + 1)] = Continuous Whole-Building Ventilation Rate

b. If A01= Multifamily then [(0.03 x conditioned floor area A02) + 7.5(Number of bedrooms A03 + 1)] = Continuous Whole-Building Ventilation Rate

2 User entered value equals the total mechanical ventilation in CFM

For information and data collection only. Not valid until registered with a HERS provider

INDOOR AIR QUALITY AND MECHANICAL VENTILATION

CERTIFICATE OF VERIFICATION		CF3R-MCH-27b-H
Indoor Air Quality and Mechanical Ventilation		(Page 1 of 5)
Project Name:	Enforcement Agency:	Permit Number:
Dwelling Address:	City	Zip Code

Title 24, Part 6, Section 150.0(o) **Ventilation for Indoor Air Quality.** All dwelling units shall meet the requirements of ANSI/ASHRAE Standard62.2. Ventilation and Acceptable Indoor Air Quality in Low-Rise Residential Buildings. ***Equation and table numbering on this form corresponds to the numbering for that information in the published ANSI/ASHRAE Standard 62.2-2010.***

A. Dwelling Mechanical Ventilation - General Information		
01	Building Type	
02	Conditioned floor area of dwelling unit	
03	Number of bedrooms in dwelling unit	
04	Ventilation Operation Schedule	
05	Whole-Building Ventilation Rate Calculation Method.	
06	Whole Building Ventilation System Type	
07	determine compliance method for this document; display applicable tables below; (this row not visible to user)	

27b - Continuous Ventilation Airflow – Total Ventilation Rate Method

B. Whole-Building Continuous Ventilation - Total Ventilation Rate Method - A mechanical supply system, exhaust system, or combination thereof shall provide whole-building ventilation with outdoor air each hour at no less than the rate in 62.2 equation 4.7.		
01	Total Required Ventilation rate (fan + infiltration), (Qtot)	
02	CFM50 from a registered ENV-20a-d	
03	Equivalent Leakage Area used for ventilation	
04	What is the vertical distance from the lowest above-grade floor to the highest ceiling in feet?	
05	What is the weather and shielding factor (wsf) for the city listed in 62.2 Appendix X Table X1?	
06	Normalized Leakage (NL)	
07	Ventilation provided by infiltration in (Qinf)	
08	Required Continuous Whole-Building Ventilation Rate (Q_{fan})	
09	Installed Continuous Whole-Building Ventilation Rate	

C. Compliance Statement

For information and data collection only. Not valid until registered with a HERS provider

D. Local Mechanical Exhaust System – Fan selection and duct design criteria for compliance

Local mechanical exhaust fans shall be installed in each kitchen and bathroom. *Delivered local ventilation rates:*

- *All local ventilation rates have been measured using a flow hood, flow grid, or other airflow measuring device and meet the requirements of 62.2 Tables 5.1 or 5.2. OR*
- *The airflow rating at a pressure of 0.25 in. w.c. of a certified fan is assumed because the local ventilation system duct sizing meets the prescriptive requirements of 62.2 Table 5.3, or manufacturer's design criteria.*

Table 5.1
Intermittent Local Ventilation Exhaust Airflow Rates

Application	Airflow	Notes
Kitchen	100 cfm	
Bathroom	50 cfm	

Table 5.2
Continuous Local Ventilation Exhaust Airflow Rates

Application	Airflow	Notes
Kitchen	5 ACH	
Bathroom	20 cfm	

Table 5.3
Prescriptive Duct Sizing Requirements

Diameter, (in)	Flex Duct				Smooth Duct			
Fan Rating cfm @ 0.25 in. w.g.	50	80	100	125	50	80	100	125
	Maximum Allowable Duct Length (ft)							
Diameter, (in)	Flex Duct				Smooth Duct			
3	X	X	X	X	5	X	X	X
4	70	3	X	X	105	35	5	X
5	NL	70	35	20	NL	135	85	55
6	NL	NL	125	95	NL	NL	NL	145
7 and above	NL	NL	NL	NL	NL	NL	NL	NL

This table assumes no elbows. Deduct 15 ft of allowable duct length for each turn, elbow, or fitting. Interpolation and extrapolation in 62.2 Table 5.3 is not allowed. For airflow values not listed, use the next higher value. This table is not applicable for airflow > 125 cfm.
NL = no limit on duct length of this size.
X = not allowed, any length of duct of this size with assumed turns, elbows, fittings will exceed the rated pressure drop.

The responsible person's signature on this document indicates that the installation meets the applicable requirements specified in Table D – Local Mechanical Exhaust System.

For information and data collection only. Not valid until registered with a HERS provider

E. Other Requirements	
The items listed below (6.1 through 6.8) correspond to the information given in ASHRAE 62.2 Section 6 "Other Requirements". Refer also to Chapter 4.6 of the Residential Compliance Manual (Section 4.6.5) for information describing these "Other Requirements". The signature of the Responsible Person in the declaration statement below certifies that the building complies with these requirements specified in ASHRAE 62.2 Section 6.1 through 6.9 if applicable.	
01	**6.1 Transfer Air** = <<Measures shall be taken to minimize air movement across envelope components to occupiable spaces from garages, unconditioned crawl spaces, and unconditioned attics. Supply and balanced ventilation systems shall be designed and constructed to provide ventilation air directly from the outdoors>>
02	**6.2 Instructions and Labeling** = <<Information on the ventilation design and/or ventilation systems installed, instructions on their proper operation to meet the requirements of this standard, and instructions detailing any required maintenance (similar to that provided for HVAC systems) shall be provided to the owner and the occupant of the dwelling unit. Controls shall be labeled as to their function (unless that function is obvious, such as toilet exhaust fan switches). See Chapter 13 of Guideline 24[2] for information on instructions and labeling>>
03	**6.3 Cloths Dryers** = <<Clothes dryers shall be exhausted directly to the outdoors>>
04	**6.4 Combustion and solid-fuel burning appliances** = << Combustion and solid-fuel burning appliances must be provided with adequate combustion and ventilation air and vented in accordance with manufacturer's installation instructions, NFPA 54/ANSI Z223.1, National Fuel Gas Code, NFPA 31, Standard for the Installation of Oil-Burning Equipment, or NFPA 211, Standard for Chimneys, Fireplaces, Vents, and Solid-Fuel Burning Appliances, or other equivalent code acceptable to the building official. Where atmospherically vented combustion appliances or solid-fuel burning appliances are located inside the pressure boundary, the total net exhaust flow of the two largest exhaust fans (not including a summer cooling fan intended to be operated only when windows or other air inlets are open) shall not exceed 15 cfm/100 ft² (75 Lps/100 m^2) of occupiable space when in operation at full capacity. If the designed total net flow exceeds this limit, the net exhaust flow must be reduced by reducing the exhaust flow or providing compensating outdoor airflow. Atmospherically vented combustion appliances do not include direct-vent appliances.>>
05	**6.5 Garages** = <<When an occupiable space adjoins a garage, the design must prevent migration of contaminants to the adjoining occupiable space. Air seal the walls, ceilings, and floors that separate garages from occupiable space. To be considered air sealed, all joints, seams, penetrations, openings between door assemblies and their respective jambs and framing, and other sources of air leakage through wall and ceiling assemblies separating the garage from the residence and its attic area shall be caulked, gasketed, weather stripped, wrapped, or otherwise sealed to limit air movement. Doors between garages and occupiable spaces shall be gasketed or made substantially airtight with weather stripping>>
06	**6.6 Ventilation Opening Area** = <<Spaces shall have ventilation openings as listed below. Such openings shall meet the requirements of Section 6.8>>
07	**6.7 Minimum filtration** = <<Mechanical systems that supply air to an occupiable space through ductwork exceeding 10 ft (3 m) in length and through a thermal conditioning component, except evaporative coolers, shall be provided with a filter having a designated minimum efficiency of MERV 6, or better, when tested in accordance with ANSI/ASHRAE Standard 52.2, Method of Testing General Ventilation Air-Cleaning Devices for Removal Efficiency by Particle Size, or a minimum Particle Size Efficiency of 50% in the 3.0-10 µm range in accordance with AHRI Standard 680, Performance Rating of Residential Air Filter Equipment. The system shall be designed such that all recirculated and mechanically supplied outdoor air is filtered before passing through the thermal conditioning components. The filter shall be located and installed in such a manner as to facilitate access and regular service by the owner>>
08	**6.8 Air Inlets** = <<Air inlets that are part of the ventilation design shall be located a minimum of 10 ft (3 m) from known sources of contamination such as a stack, vent, exhaust hood, or vehicle exhaust. The intake shall be placed so that entering air is not obstructed by snow, plantings, or other material. Forced air inlets shall be provided with rodent/insect screens (mesh not larger than 1/2 inch)>>
09	**6.9 Carbon Monoxide Detectors** = << A carbon monoxide alarm shall be installed in each dwelling unit in accordance with NFPA 720, *Standard for the Installation of Carbon Monoxide (CO) Detection and Warning Equipment*14, and shall be consistent with requirements of applicable laws, codes, and standards.add brief description>>
The responsible person's signature on this document indicates that the installation meets the applicable requirements specified in Table E – Other Requirements.	

For information and data collection only. Not valid until registered with a HERS provider.

F. Air Moving Equipment	
The items listed below (7.1 through 7.3) correspond to the information given in ASHRAE 62.2 Section 7 "Air-Moving Equipment". Refer also to Chapter 4.6 of the Residential Compliance Manual (Section 4.6.6) for information describing these requirements in more detail. The signature of the Responsible Person in the declaration statement below certifies that the building complies with these requirements specified in ASHRAE 62.2 Section 7.1 through 7.3 if applicable.	
01	**7.1 Selection and Installation.** Ventilation devices and equipment shall be tested and listed in accordance with specific standards. Installations of systems or equipment shall be carried out in accordance with manufacturers' design requirements and installation instructions.
02	**7.2 Sound Ratings for Fans.** Ventilation fans shall be rated for sound at no less than the minimum airflow rate required by this standard, as noted below. These sound ratings shall be at a minimum of 0.1 in. w.c. (25 Pa) static pressure. 7.2.1 **Whole-Building or Continuous Ventilation Fans.** These fans shall be rated for sound at a maximum of 1.0 sone. 7.2.2 **Intermittent Local Exhaust Fans.** Fans used to comply with Section 5.2 shall be rated for sound at a maximum of 3 sone, unless their maximum rated airflow exceeds 400 cfm (200 L/s). (Some exceptions may apply.)
03	**7.3 Multibranch Exhaust Ducting.** If more than one of the exhaust fans in a dwelling unit shares a common exhaust duct, each fan shall be equipped with a back-draft damper to prevent the recirculation of exhaust air from one room to another through the exhaust ducting system.
The responsible person's signature on this document indicates that the installation meets the applicable requirements specified in Table F – Air Moving Equipment.	

G. Multifamily Buildings - Other Requirements <<only print this section if multi-family is selected in row A.1>>	
The items listed below correspond to the information given in ASHRAE 62.2 Section 8 "Multifamily Buildings". Refer also to Chapter 4.6 of the Residential Compliance Manual (Section 4.6.5) for information describing these requirements in more detail. The signature of the Responsible Person in the declaration statement below certifies that the building complies with these requirements specified in ASHRAE 62.2 Section 8, if applicable.	
01	**8.4.1 Transfer Air.** Measures shall be taken to minimize air movement across envelope components separating dwelling units, including sealing penetrations in the common walls, ceilings, and floors of each unit and by sealing vertical chases adjacent to the units. All doors between dwelling units and common hallways shall be gasketed or made substantially airtight. **8.4.1.1 Compliance.** One method of demonstrating compliance with Section 8.4.1 shall be to verify a leakage rate below a maximum of 0.2 cfm per ft^2 (100 L/s per 100 m^2) of the dwelling unit envelope area (i.e., the sum of the area of the walls between dwelling units, exterior walls, ceiling and floor) at a test pressure of 50 Pa by a blower door test. The test shall be conducted with the dwelling unit as if it were exposed to outdoor air on all sides, top, and bottom by opening doors and windows of adjacent dwelling units.
The responsible person's signature on this document indicates that the installation meets the applicable requirements specified in Table G – Multifamily Buildings	

For information and data collection only. Not valid until registered with a HERS provider

CERTIFICATE OF VERIFICATION		CF3R-MCH-27b-H
Indoor Air Quality and Mechanical Ventilation		(Page 5 of 5)
Project Name:	Enforcement Agency:	Permit Number:
Dwelling Address:	City	Zip Code

DOCUMENTATION AUTHOR'S DECLARATION STATEMENT

1. I certify that this Certificate of Verification documentation is accurate and complete.

Documentation Author Name:	Documentation Author Signature:
Company:	Date Signed:
Address:	CEA/HERS Certification Information (if applicable):
City/State/Zip:	Phone:

RESPONSIBLE PERSON'S DECLARATION STATEMENT

I certify the following under penalty of perjury, under the laws of the State of California:

1. The information provided on this Certificate of Verification is true and correct.
2. I am the certified HERS Rater who performed the verification identified and reported on this Certificate of Verification (responsible rater).
3. The installed features, materials, components, manufactured devices, or system performance diagnostic results that require HERS verification identified on this Certificate of Verification comply with the applicable requirements in Reference Appendices RA2, RA3, and the requirements specified on the Certificate of Compliance for the building approved by the enforcement agency.
4. The information reported on applicable sections of the Certificate(s) of Installation (CF2R) signed and submitted by the person(s) responsible for the construction or installation conforms to the requirements specified on the Certificate(s) of Compliance (CF1R) approved by the enforcement agency.
5. I will ensure that a registered copy of this Certificate of Verification shall be posted, or made available with the building permit(s) issued for the building, and made available to the enforcement agency for all applicable inspections. I understand that a registered copy of this Certificate of Verification is required to be included with the documentation the builder provides to the building owner at occupancy.

BUILDER OR INSTALLER INFORMATION AS SHOWN ON THE CERTIFICATE OF INSTALLATION

Company Name (Installing Subcontractor, General Contractor, or Builder/Owner):	
Responsible Builder or Installer Name:	CSLB License:

HERS PROVIDER DATA REGISTRY INFORMATION

Sample Group Number (if applicable):	Dwelling Test Status in Sample Group (if applicable)

HERS RATER INFORMATION

HERS Rater Company Name:	
Responsible Rater Name:	Responsible Rater Signature:
Responsible Rater Certification Number w/ this HERS Provider	Date Signed:

For information and data collection only. Not valid until registered with a HERS provider

User Instructions – MCH-27b:

Section A. General Information

1 This information is automatically pulled from the CF-2R-MCH-27b. If building type does not match this entry, it can be overwritten by rater but it will be flagged as a possible fail. Choices are "single family" and "low-rise multifamily"
2 This information is automatically pulled from the CF-2R-MCH-27b. If conditioned floor area does not match this entry, it can be overwritten by rater but it will be flagged as a possible fail. Value to be entered in the field equals the conditioned floor area of the space, in square feet.
3 This information is automatically pulled from the CF-2R-MCH-27b. If number of bedrooms not match this entry, it can be overwritten by rater but it will be flagged as a possible fail. Value to be entered in the field equals the number of bedrooms in the home.
4 This information is automatically pulled from the CF-2R-MCH-27b. If ventilation operation schedule does not match this entry, it can be overwritten by rater from list but it will be flagged as a possible fail. Select the Ventilation Operation Schedule method used from the choices provided:
- Continuous
- Intermittent

5 This information is automatically pulled from the CF-2R-MCH-27b. If whole-building ventilation rate calculation method does not match this entry, it can be overwritten by rater from list but it will be flagged as a possible fail. Select the Whole Building Ventilation Rate Calculation Method from the choices provided:
- Fan Ventilation Rate Method
- Total Ventilation Rate Method

6 This information is automatically pulled from the CF-2R-MCH-27b. If whole-building ventilation system type does not match this entry, it can be overwritten by rater from list but it will be flagged as a possible fail. Select the Whole Building Ventilation System Type from the choices provided:
- Standalone - Exhaust
- Standalone - Supply
- Standalone - Balanced

Section B. Whole Building Continuous Ventilation – Total Ventilation Rate Method

1 This value is automatically calculated using 62.2 equation 4.2a. The equation used to calculate this value in the field equals:
   a. If A01= Single Family then [(0.03 x conditioned floor area A02) + 7.5(Number of bedrooms A03 + 1)] = Required Continuous Whole-Building Ventilation Rate
   b. If A01= Multifamily then [(0.05 x conditioned floor area A02) + 7.5(Number of bedrooms A03 + 1)] = Required Continuous Whole-Building Ventilation Rate
2 This information is automatically pulled from the registered ENV-20a-d row A.2
3 This value is automatically calculated. The equation used to calculate this value in the field equals: (CFM50 B02 x 0.055= Equivalent Leakage Area (ELA)
4 User entered value equals the vertical distance from the lowest above-grade floor to the highest ceiling in feet
5 User entered value equals the Weather Shielding Factor (wsf) from 62.2 Appendix X Table X1.
6 This value is automatically calculated using 62.2 equation 4.5. The equation used to calculate this value in the field equals: [1000 x (Equivalent Leakage Area (ELA) row B02/ conditioned floor area A02) x (Vertical Distance B04/8.2)^0.4]= Normalized Leakage (NL)
7 This value is automatically calculated using 62.2 equation 4.6a. The equation used to calculate this value in the field equals: (Normalized Leakage (NL) row B06 x conditioned floor area A02)/7.3= Ventilation Provided by Ventilation
8 This value is automatically calculated using 62.2 equation 4.6a. The equation used to calculate this value in the field equals: (Normalized Leakage (NL) row B06 x conditioned floor area A02)/7.3= Ventilation Provided by Infiltration in (CFM)
9 This value is automatically calculated using 62.2 equation 4.7. The equation used to calculate this value in the field equals: (Required Continuous Whole-Building Ventilation Rate row B01 - Ventilation Provided by Infiltration row B08 = Required Continuous Whole-Building Ventilation Rate in (CFM)
10 User entered value equals the installed ventilation rate in (CFM)

For information and data collection only. Not valid until registered with a HERS provider

CERTIFICATE OF VERIFICATION		CF3R-MCH-27c-H
Indoor Air Quality and Mechanical Ventilation		(Page 1 of 5)
Project Name:	Enforcement Agency:	Permit Number:
Dwelling Address:	City	Zip Code

Title 24, Part 6, Section 150.0(o) **Ventilation for Indoor Air Quality.** All dwelling units shall meet the requirements of ANSI/ASHRAE Standard62.2. Ventilation and Acceptable Indoor Air Quality in Low-Rise Residential Buildings. ***Equation and table numbering on this form corresponds to the numbering for that information in the published ANSI/ASHRAE Standard 62.2-2010.***

A. Dwelling Mechanical Ventilation - General Information		
01	Building Type	
02	Conditioned floor area of dwelling unit	
03	Number of bedrooms in dwelling unit	
04	Ventilation Operation Schedule	
05	Whole-Building Ventilation Rate Calculation Method.	
06	Whole Building Ventilation System Type	
07	determine compliance method for this document; display applicable tables below; (this row not visible to user)	

27c - Intermittent Ventilation Airflow - Fan Vent Rate Method

B. Whole-Building Continuous Ventilation - Fan Ventilation Rate Method - A mechanical supply system, exhaust system, or combination thereof shall provide whole-building ventilation with outdoor air each hour at no less than the rate in 62.2 equation 4.1a.		
01	Required Continuous Whole-Building Ventilation Rate (Q_{fan})	

C. Intermittent Ventilation: The effective ventilation rate of an **intermittent** system is the combination of its delivered capacity, its fractional on-time, cycle time, and the ventilation effectiveness from Table 4.2. <<This section is only printed if an intermittent strategy is chosen in row 1>>		
01	In a single on off cycle, what is the ON time in hours?	
02	In a single on off cycle, what is the OFF time in hours?	
03	System must operate at least once every 24 hours. (Row 6 + Row 7 must be less than or equal to 24 hours)	
04	Daily fractional on time (*f* used in Table 4.2).	
05	System must operate at least 10% of the time.	
06	Turnover (N used in Table 4.2)	
07	Ventilation effectiveness (e, from Table 4.2)	
08	Intermittent ventilation rate	
09	Installed Intermittent ventilation Rate	
10	<<this line only visible if CFI System selected in A06>> System Fan Efficacy Compliance Status	
11	<<this line only visible if CFI System selected in A06>> System Fan Efficacy Compliance	

D. Compliance Statement

For information and data collection only. Not valid until registered with a HERS provider

E. Local Mechanical Exhaust System – Fan selection and duct design criteria for compliance

Local mechanical exhaust fans shall be installed in each kitchen and bathroom. Delivered local ventilation rates:

- **All local ventilation rates have been measured using a flow hood, flow grid, or other airflow measuring device and meet the requirements of 62.2 Tables 5.1 or 5.2. OR**
- **The airflow rating at a pressure of 0.25 in. w.c. of a certified fan is assumed because the local ventilation system duct sizing meets the prescriptive requirements of 62.2 Table 5.3, or manufacturer's design criteria.**

Table 5.1
Intermittent Local Ventilation Exhaust Airflow Rates

Application	Airflow	Notes
Kitchen	100 cfm	
Bathroom	50 cfm	

Table 5.2
Continuous Local Ventilation Exhaust Airflow Rates

Application	Airflow	Notes
Kitchen	5 ACH	
Bathroom	20 cfm	

Table 5.3
Prescriptive Duct Sizing Requirements

Diameter, (in)	Flex Duct				Smooth Duct			
Fan Rating cfm @ 0.25 in. w.g.	50	80	100	125	50	80	100	125
	Maximum Allowable Duct Length (ft)							
Diameter, (in)	Flex Duct				Smooth Duct			
3	X	X	X	X	5	X	X	X
4	70	3	X	X	105	35	5	X
5	NL	70	35	20	NL	135	85	55
6	NL	NL	125	95	NL	NL	NL	145
7 and above	NL	NL	NL	NL	NL	NL	NL	NL

This table assumes no elbows. Deduct 15 ft of allowable duct length for each turn, elbow, or fitting. Interpolation and extrapolation in 62.2 Table 5.3 is not allowed. For airflow values not listed, use the next higher value. This table is not applicable for airflow > 125 cfm.
NL = no limit on duct length of this size.
X = not allowed, any length of duct of this size with assumed turns, elbows, fittings will exceed the rated pressure drop.

The responsible person's signature on this document indicates that the installation meets the applicable requirements specified in Table D – Local Mechanical Exhaust System.

For information and data collection only. Not valid until registered with a HERS provider

CERTIFICATE OF VERIFICATION		CF3R-MCH-27c-H
Indoor Air Quality and Mechanical Ventilation		(Page 3 of 5)
Project Name:	Enforcement Agency:	Permit Number:
Dwelling Address:	City	Zip Code

F. Other Requirements	
The items listed below (6.1 through 6.8) correspond to the information given in ASHRAE 62.2 Section 6 "Other Requirements". Refer also to Chapter 4.6 of the Residential Compliance Manual (Section 4.6.5) for information describing these "Other Requirements". The signature of the Responsible Person in the declaration statement below certifies that the building complies with these requirements specified in ASHRAE 62.2 Section 6.1 through 6.9 if applicable.	
01	**6.1 Transfer Air** = <<Measures shall be taken to minimize air movement across envelope components to occupiable spaces from garages, unconditioned crawl spaces, and unconditioned attics. Supply and balanced ventilation systems shall be designed and constructed to provide ventilation air directly from the outdoors>>
02	**6.2 Instructions and Labeling** = <<Information on the ventilation design and/or ventilation systems installed, instructions on their proper operation to meet the requirements of this standard, and instructions detailing any required maintenance (similar to that provided for HVAC systems) shall be provided to the owner and the occupant of the dwelling unit. Controls shall be labeled as to their function (unless that function is obvious, such as toilet exhaust fan switches). See Chapter 13 of Guideline 24[2] for information on instructions and labeling>>
03	**6.3 Cloths Dryers** = <<Clothes dryers shall be exhausted directly to the outdoors>>
04	**6.4 Combustion and solid-fuel burning appliances** = << Combustion and solid-fuel burning appliances must be provided with adequate combustion and ventilation air and vented in accordance with manufacturer's installation instructions, NFPA 54/ANSI Z223.1, National Fuel Gas Code, NFPA 31, Standard for the Installation of Oil-Burning Equipment, or NFPA 211, Standard for Chimneys, Fireplaces, Vents, and Solid-Fuel Burning Appliances, or other equivalent code acceptable to the building official. Where atmospherically vented combustion appliances or solid-fuel burning appliances are located inside the pressure boundary, the total net exhaust flow of the two largest exhaust fans (not including a summer cooling fan intended to be operated only when windows or other air inlets are open) shall not exceed 15 cfm/100 ft² (75 Lps/100 m^2) of occupiable space when in operation at full capacity. If the designed total net flow exceeds this limit, the net exhaust flow must be reduced by reducing the exhaust flow or providing compensating outdoor airflow. Atmospherically vented combustion appliances do not include direct-vent appliances.>>
05	**6.5 Garages** = <<When an occupiable space adjoins a garage, the design must prevent migration of contaminants to the adjoining occupiable space. Air seal the walls, ceilings, and floors that separate garages from occupiable space. To be considered air sealed, all joints, seams, penetrations, openings between door assemblies and their respective jambs and framing, and other sources of air leakage through wall and ceiling assemblies separating the garage from the residence and its attic area shall be caulked, gasketed, weather stripped, wrapped, or otherwise sealed to limit air movement. Doors between garages and occupiable spaces shall be gasketed or made substantially airtight with weather stripping>>
06	**6.6 Ventilation Opening Area** = <<Spaces shall have ventilation openings as listed below. Such openings shall meet the requirements of Section 6.8>>
07	**6.7 Minimum filtration** = <<Mechanical systems that supply air to an occupiable space through ductwork exceeding 10 ft (3 m) in length and through a thermal conditioning component, except evaporative coolers, shall be provided with a filter having a designated minimum efficiency of MERV 6, or better, when tested in accordance with ANSI/ASHRAE Standard 52.2, Method of Testing General Ventilation Air-Cleaning Devices for Removal Efficiency by Particle Size, or a minimum Particle Size Efficiency of 50% in the 3.0-10 µm range in accordance with AHRI Standard 680, Performance Rating of Residential Air Filter Equipment. The system shall be designed such that all recirculated and mechanically supplied outdoor air is filtered before passing through the thermal conditioning components. The filter shall be located and installed in such a manner as to facilitate access and regular service by the owner>>
08	**6.8 Air Inlets** = <<Air inlets that are part of the ventilation design shall be located a minimum of 10 ft (3 m) from known sources of contamination such as a stack, vent, exhaust hood, or vehicle exhaust. The intake shall be placed so that entering air is not obstructed by snow, plantings, or other material. Forced air inlets shall be provided with rodent/insect screens (mesh not larger than 1/2 inch)>>
09	**6.9 Carbon Monoxide Detectors** = << A carbon monoxide alarm shall be installed in each dwelling unit in accordance with NFPA 720, *Standard for the Installation of Carbon Monoxide (CO) Detection and Warning Equipment*14, and shall be consistent with requirements of applicable laws, codes, and standards.add brief description>>
The responsible person's signature on this document indicates that the installation meets the applicable requirements specified in Table E – Other Requirements.	

For information and data collection only. Not valid until registered with a HERS provider.

G. Air Moving Equipment	
The items listed below (7.1 through 7.3) correspond to the information given in ASHRAE 62.2 Section 7 "Air-Moving Equipment". Refer also to Chapter 4.6 of the Residential Compliance Manual (Section 4.6.6) for information describing these requirements in more detail. The signature of the Responsible Person in the declaration statement below certifies that the building complies with these requirements specified in ASHRAE 62.2 Section 7.1 through 7.3 if applicable.	
01	**7.1 Selection and Installation.** Ventilation devices and equipment shall be tested and listed in accordance with specific standards. Installations of systems or equipment shall be carried out in accordance with manufacturers' design requirements and installation instructions.
02	**7.2 Sound Ratings for Fans.** Ventilation fans shall be rated for sound at no less than the minimum airflow rate required by this standard, as noted below. These sound ratings shall be at a minimum of 0.1 in. w.c. (25 Pa) static pressure. 7.2.1 **Whole-Building or Continuous Ventilation Fans.** These fans shall be rated for sound at a maximum of 1.0 sone. 7.2.2 **Intermittent Local Exhaust Fans.** Fans used to comply with Section 5.2 shall be rated for sound at a maximum of 3 sone, unless their maximum rated airflow exceeds 400 cfm (200 L/s). (Some exceptions may apply.)
03	**7.3 Multibranch Exhaust Ducting.** If more than one of the exhaust fans in a dwelling unit shares a common exhaust duct, each fan shall be equipped with a back-draft damper to prevent the recirculation of exhaust air from one room to another through the exhaust ducting system.
The responsible person's signature on this document indicates that the installation meets the applicable requirements specified in Table F – Air Moving Equipment.	

H. Multifamily Buildings - Other Requirements <<only print this section if multi-family is selected in row A.1>>	
The items listed below correspond to the information given in ASHRAE 62.2 Section 8 "Multifamily Buildings". Refer also to Chapter 4.6 of the Residential Compliance Manual (Section 4.6.5) for information describing these requirements in more detail. The signature of the Responsible Person in the declaration statement below certifies that the building complies with these requirements specified in ASHRAE 62.2 Section 8, if applicable.	
01	**8.4.1 Transfer Air.** Measures shall be taken to minimize air movement across envelope components separating dwelling units, including sealing penetrations in the common walls, ceilings, and floors of each unit and by sealing vertical chases adjacent to the units. All doors between dwelling units and common hallways shall be gasketed or made substantially airtight. **8.4.1.1 Compliance.** One method of demonstrating compliance with Section 8.4.1 shall be to verify a leakage rate below a maximum of 0.2 cfm per ft^2 (100 L/s per 100 m^2) of the dwelling unit envelope area (i.e., the sum of the area of the walls between dwelling units, exterior walls, ceiling and floor) at a test pressure of 50 Pa by a blower door test. The test shall be conducted with the dwelling unit as if it were exposed to outdoor air on all sides, top, and bottom by opening doors and windows of adjacent dwelling units.
The responsible person's signature on this document indicates that the installation meets the applicable requirements specified in Table G – Multifamily Buildings	

For information and data collection only. Not valid until registered with a HERS Provider

CERTIFICATE OF VERIFICATION		CF3R-MCH-27c-H
Indoor Air Quality and Mechanical Ventilation		(Page 5 of 5)
Project Name:	Enforcement Agency:	Permit Number:
Dwelling Address:	City	Zip Code

DOCUMENTATION AUTHOR'S DECLARATION STATEMENT	
1. I certify that this Certificate of Verification documentation is accurate and complete.	
Documentation Author Name:	Documentation Author Signature:
Company:	Date Signed:
Address:	CEA/HERS Certification Information (if applicable):
City/State/Zip:	Phone:

RESPONSIBLE PERSON'S DECLARATION STATEMENT

I certify the following under penalty of perjury, under the laws of the State of California:

1. The information provided on this Certificate of Verification is true and correct.
2. I am the certified HERS Rater who performed the verification identified and reported on this Certificate of Verification (responsible rater).
3. The installed features, materials, components, manufactured devices, or system performance diagnostic results that require HERS verification identified on this Certificate of Verification comply with the applicable requirements in Reference Appendices RA2, RA3, and the requirements specified on the Certificate of Compliance for the building approved by the enforcement agency.
4. The information reported on applicable sections of the Certificate(s) of Installation (CF2R) signed and submitted by the person(s) responsible for the construction or installation conforms to the requirements specified on the Certificate(s) of Compliance (CF1R) approved by the enforcement agency.
5. I will ensure that a registered copy of this Certificate of Verification shall be posted, or made available with the building permit(s) issued for the building, and made available to the enforcement agency for all applicable inspections. I understand that a registered copy of this Certificate of Verification is required to be included with the documentation the builder provides to the building owner at occupancy.

BUILDER OR INSTALLER INFORMATION AS SHOWN ON THE CERTIFICATE OF INSTALLATION	
Company Name (Installing Subcontractor, General Contractor, or Builder/Owner):	
Responsible Builder or Installer Name:	CSLB License:

HERS PROVIDER DATA REGISTRY INFORMATION	
Sample Group Number (if applicable):	Dwelling Test Status in Sample Group (if applicable)

HERS RATER INFORMATION	
HERS Rater Company Name:	
Responsible Rater Name:	Responsible Rater Signature:
Responsible Rater Certification Number w/ this HERS Provider	Date Signed:

For information and data collection only. Not valid until registered with a HERS provider

User Instructions – MCH-27c:

Section A. General Information

1 This information is automatically pulled from the CF-2R-MCH-27c. If building type does not match this entry, it can be overwritten by rater but it will be flagged as a possible fail. Choices are "single family" and "low-rise multifamily"

2 This information is automatically pulled from the CF-2R-MCH-27c. If conditioned floor area does not match this entry, it can be overwritten by rater but it will be flagged as a possible fail. Value to be entered in the field equals the conditioned floor area of the space, in square feet.

3 This information is automatically pulled from the CF-2R-MCH-27c. If number of bedrooms not match this entry, it can be overwritten by rater but it will be flagged as a possible fail. Value to be entered in the field equals the number of bedrooms in the home.

4 This information is automatically pulled from the CF-2R-MCH-27c. If ventilation operation schedule does not match this entry, it can be overwritten by rater from list but it will be flagged as a possible fail. Select the Ventilation Operation Schedule method used from the choices provided:
- Continuous
- Intermittent

5 This information is automatically pulled from the CF-2R-MCH-27c. If whole-building ventilation rate calculation method does not match this entry, it can be overwritten by rater from list but it will be flagged as a possible fail. Select the Whole Building Ventilation Rate Calculation Method from the choices provided:
- Fan Ventilation Rate Method
- Total Ventilation Rate Method

6 This information is automatically pulled from the CF-2R-MCH-27c. If whole-building ventilation system type does not match this entry, it can be overwritten by rater from list but it will be flagged as a possible fail. Select the Whole Building Ventilation System Type from the choices provided:
- Standalone - Exhaust
- Standalone - Supply
- Standalone - Balanced
- Central Fan Integrated (CFI)

Section B. Whole Building Continuous Ventilation – Fan Ventilation Rate Method

1 This value is automatically calculated using equation 4.1a. The equation used to calculate this value in the field equals:
   a. If A01= Single Family then [(0.01 x conditioned floor area A02) + 7.5(Number of bedrooms A03 + 1)] = Continuous Whole-Building Ventilation Rate
   b. If A01= Multifamily then [(0.03 x conditioned floor area A02) + 7.5(Number of bedrooms A03 + 1)] = Continuous Whole-Building Ventilation Rate

Section C. Intermittent Ventilation

1 Intermittent ventilation requires controls that ensure a regular operating schedule every 24 hours. Within a 24 hour period there will be one or more regular on off cycles. For a single on off cycle, enter the on time in hours. This value will be verified by a HERS rater.

2 Intermittent ventilation requires controls that ensure a regular operating schedule every 24 hours. Within a 24 hour period there will be one or more regular on off cycles. For a single on off cycle, enter the off time in hours. This value will be verified by a HERS rater.

3 This row performs an automatic check. The intermittent ventilation system must operate at least once every 24 hours. For this to occur, the on time plus the off time in a single on off cycle must be less than 24 hours. If this is true, "OK" will appear. If this is not true, an error will appear here and correct values will need to be entered into Rows C01 and C02. The equation used to calculate this value in the field equals: Time on in hours row C01 + Time off in hours row C02.

4 This value is automatically calculated. It is the daily fractional on time (*f*) used in 62.2 Table 4.2. A value of 0.60 means that in a 24 hour period the fan will run 60% of the time. The equation used to calculate this value in the field equals: On time in Hours row C01/(On time in Hours row C01 + Off time in Hours row C02)= Daily fractional on time

5 This row performs an automatic check. The ventilation system must operate at least 10% of the time. Row C04 must be greater than or equal to 0.10. If this is true, "OK" will appear. If this is not true, an error message will appear here and correct values will need to be entered into Rows C01 and C02.

6 This value is automatically calculated. It is the turnover (N) used in 62.2 Table 4.2. The equation used to calculate this value in the field equals: [12.8 x Continuous Whole-Building Ventilation Rate row B01 x (On time in Hours row C01 + Off time in Hours row C02)]/ Conditioned floor area of dwelling unit row A02= Turnover N

7 User entered value use the daily fractional time (*f*) from Row C04 and the turnover (N) from Row C06 to determine the ventilation effectiveness value (e) from 62.2 table 4.2.

8 This value is automatically calculated using 62.2 equation 4.8. It represents the required airflow in cfm that must be delivered during the ventilation system on times. This value will be verified by a HERS rater. The equation used to calculate this value in the field equals: Continuous Whole-Building Ventilation Rate row B01/(Daily fractional on time row C04 x ventilation effectiveness value row C07= required Intermittent ventilation rate

9 User entered value equals the installed intermittent ventilation rate in (CFM)

10 This information is automatically pulled from the registered MCH-22 row B07 Note: this line only visible if CFI System selected in A06

For information and data collection only. Not valid until registered with a HERS provider

11 This information is automatically calculated based on C10 Note: this line only visible if CFI System selected in A06

For information and data collection only. Not valid until registered with a HERS provider

INDOOR AIR QUALITY AND MECHANICAL VENTILATION

CERTIFICATE OF VERIFICATION		CF3R-MCH-27-H
Indoor Air Quality and Mechanical Ventilation		(Page 1 of 5)
Project Name:	Enforcement Agency:	Permit Number:
Dwelling Address:	City	Zip Code

Title 24, Part 6, Section 150.0(o) **Ventilation for Indoor Air Quality.** All dwelling units shall meet the requirements of ANSI/ASHRAE Standard62.2. Ventilation and Acceptable Indoor Air Quality in Low-Rise Residential Buildings. ***Equation and table numbering on this form corresponds to the numbering for that information in the published ANSI/ASHRAE Standard 62.2-2010.***

A. Dwelling Mechanical Ventilation - General Information		
01	Building Type	
02	Conditioned floor area of dwelling unit	
03	Number of bedrooms in dwelling unit	
04	Ventilation Operation Schedule	
05	Whole-Building Ventilation Rate Calculation Method.	
06	Whole Building Ventilation System Type	
07	determine compliance method for this document; display applicable tables below; (this row not visible to user)	

27d - Intermittent Ventilation Airflow – Total Vent Rate Method

B. Whole-Building Continuous Ventilation - Total Ventilation Rate Method - A mechanical supply system, exhaust system, or combination thereof shall provide whole-building ventilation with outdoor air each hour at no less than the rate in 62.2 equation 4.7.		
01	Total Required Ventilation rate (fan + infiltration), (Qtot)	
02	CFM50 from a registered ENV-20a-d	
03	Equivalent Leakage Area used for ventilation	
04	What is the vertical distance from the lowest above-grade floor to the highest ceiling in feet?	
05	What is the weather and shielding factor (wsf) for the city listed in 62.2 Appendix X Table X1?	
06	Normalized Leakage (NL)	
07	Ventilation provided by infiltration in (Qinf)	
08	Required Continuous Whole-Building Ventilation Rate (Q_{fan})	

C. Intermittent Ventilation: The effective ventilation rate of an **intermittent** system is the combination of its delivered capacity, its fractional on-time, cycle time, and the ventilation effectiveness from Table 4.2. <<This section is only printed if an intermittent strategy is chosen in row 1>>		
01	In a single on off cycle, what is the ON time in hours?	
02	In a single on off cycle, what is the OFF time in hours?	
03	System must operate at least once every 24 hours. (Row 6 + Row 7 must be less than or equal to 24 hours)	
04	Daily fractional on time (*f* used in Table 4.2).	
05	System must operate at least 10% of the time.	
06	Turnover (N used in Table 4.2)	
07	Ventilation effectiveness (e, from Table 4.2)	
08	Intermittent ventilation rate	
09	Installed Intermittent ventilation Rate	
10	<<this line only visible if CFI System selected in A06>> System Fan Efficacy Compliance Status	
11	<<this line only visible if CFI System selected in A06>> System Fan Efficacy Compliance	

D. Compliance Statement

For information and data collection Form Not valid until registered with a HERS provider

CERTIFICATE OF VERIFICATION		CF3R-MCH-27-H
Indoor Air Quality and Mechanical Ventilation		(Page 2 of 5)
Project Name:	Enforcement Agency:	Permit Number:
Dwelling Address:	City	Zip Code

E. Local Mechanical Exhaust System – Fan selection and duct design criteria for compliance

Local mechanical exhaust fans shall be installed in each kitchen and bathroom. Delivered local ventilation rates:

- **All local ventilation rates have been measured using a flow hood, flow grid, or other airflow measuring device and meet the requirements of 62.2 Tables 5.1 or 5.2. OR**
- **The airflow rating at a pressure of 0.25 in. w.c. of a certified fan is assumed because the local ventilation system duct sizing meets the prescriptive requirements of 62.2 Table 5.3, or manufacturer's design criteria.**

Table 5.1
Intermittent Local Ventilation Exhaust Airflow Rates

Application	Airflow	Notes
Kitchen	100 cfm	
Bathroom	50 cfm	

Table 5.2
Continuous Local Ventilation Exhaust Airflow Rates

Application	Airflow	Notes
Kitchen	5 ACH	
Bathroom	20 cfm	

Table 5.3
Prescriptive Duct Sizing Requirements

Diameter, (in)	Flex Duct				Smooth Duct			
Fan Rating cfm @ 0.25 in. w.g.	50	80	100	125	50	80	100	125
	Maximum Allowable Duct Length (ft)							
Diameter, (in)	Flex Duct				Smooth Duct			
3	X	X	X	X	5	X	X	X
4	70	3	X	X	105	35	5	X
5	NL	70	35	20	NL	135	85	55
6	NL	NL	125	95	NL	NL	NL	145
7 and above	NL	NL	NL	NL	NL	NL	NL	NL

This table assumes no elbows. Deduct 15 ft of allowable duct length for each turn, elbow, or fitting. Interpolation and extrapolation in 62.2 Table 5.3 is not allowed. For airflow values not listed, use the next higher value. This table is not applicable for airflow > 125 cfm.
NL = no limit on duct length of this size.
X = not allowed, any length of duct of this size with assumed turns, elbows, fittings will exceed the rated pressure drop.

The responsible person's signature on this document indicates that the installation meets the applicable requirements specified in Table D – Local Mechanical Exhaust System.

For information and data collection only. Not valid until registered with a HERS provider

CERTIFICATE OF VERIFICATION		CF3R-MCH-27-H
Indoor Air Quality and Mechanical Ventilation		(Page 3 of 5)
Project Name:	Enforcement Agency:	Permit Number:
Dwelling Address:	City	Zip Code

F. Other Requirements	
The items listed below (6.1 through 6.8) correspond to the information given in ASHRAE 62.2 Section 6 "Other Requirements". Refer also to Chapter 4.6 of the Residential Compliance Manual (Section 4.6.5) for information describing these "Other Requirements". The signature of the Responsible Person in the declaration statement below certifies that the building complies with these requirements specified in ASHRAE 62.2 Section 6.1 through 6.9 if applicable.	
01	**6.1 Transfer Air** = <<Measures shall be taken to minimize air movement across envelope components to occupiable spaces from garages, unconditioned crawl spaces, and unconditioned attics. Supply and balanced ventilation systems shall be designed and constructed to provide ventilation air directly from the outdoors>>
02	**6.2 Instructions and Labeling** = <<Information on the ventilation design and/or ventilation systems installed, instructions on their proper operation to meet the requirements of this standard, and instructions detailing any required maintenance (similar to that provided for HVAC systems) shall be provided to the owner and the occupant of the dwelling unit. Controls shall be labeled as to their function (unless that function is obvious, such as toilet exhaust fan switches). See Chapter 13 of Guideline 24[2] for information on instructions and labeling>>
03	**6.3 Cloths Dryers** = <<Clothes dryers shall be exhausted directly to the outdoors>>
04	**6.4 Combustion and solid-fuel burning appliances** = << Combustion and solid-fuel burning appliances must be provided with adequate combustion and ventilation air and vented in accordance with manufacturer's installation instructions, NFPA 54/ANSI Z223.1, National Fuel Gas Code, NFPA 31, Standard for the Installation of Oil-Burning Equipment, or NFPA 211, Standard for Chimneys, Fireplaces, Vents, and Solid-Fuel Burning Appliances, or other equivalent code acceptable to the building official. Where atmospherically vented combustion appliances or solid-fuel burning appliances are located inside the pressure boundary, the total net exhaust flow of the two largest exhaust fans (not including a summer cooling fan intended to be operated only when windows or other air inlets are open) shall not exceed 15 cfm/100 ft² (75 Lps/100 m^2) of occupiable space when in operation at full capacity. If the designed total net flow exceeds this limit, the net exhaust flow must be reduced by reducing the exhaust flow or providing compensating outdoor airflow. Atmospherically vented combustion appliances do not include direct-vent appliances.>>
05	**6.5 Garages** = <<When an occupiable space adjoins a garage, the design must prevent migration of contaminants to the adjoining occupiable space. Air seal the walls, ceilings, and floors that separate garages from occupiable space. To be considered air sealed, all joints, seams, penetrations, openings between door assemblies and their respective jambs and framing, and other sources of air leakage through wall and ceiling assemblies separating the garage from the residence and its attic area shall be caulked, gasketed, weather stripped, wrapped, or otherwise sealed to limit air movement. Doors between garages and occupiable spaces shall be gasketed or made substantially airtight with weather stripping>>
06	**6.6 Ventilation Opening Area** = <<Spaces shall have ventilation openings as listed below. Such openings shall meet the requirements of Section 6.8>>
07	**6.7 Minimum filtration** = <<Mechanical systems that supply air to an occupiable space through ductwork exceeding 10 ft (3 m) in length and through a thermal conditioning component, except evaporative coolers, shall be provided with a filter having a designated minimum efficiency of MERV 6, or better, when tested in accordance with ANSI/ASHRAE Standard 52.2, Method of Testing General Ventilation Air-Cleaning Devices for Removal Efficiency by Particle Size, or a minimum Particle Size Efficiency of 50% in the 3.0-10 µm range in accordance with AHRI Standard 680, Performance Rating of Residential Air Filter Equipment. The system shall be designed such that all recirculated and mechanically supplied outdoor air is filtered before passing through the thermal conditioning components. The filter shall be located and installed in such a manner as to facilitate access and regular service by the owner>>
08	**6.8 Air Inlets** = <<Air inlets that are part of the ventilation design shall be located a minimum of 10 ft (3 m) from known sources of contamination such as a stack, vent, exhaust hood, or vehicle exhaust. The intake shall be placed so that entering air is not obstructed by snow, plantings, or other material. Forced air inlets shall be provided with rodent/insect screens (mesh not larger than 1/2 inch)>>
09	**6.9 Carbon Monoxide Detectors** = << A carbon monoxide alarm shall be installed in each dwelling unit in accordance with NFPA 720, *Standard for the Installation of Carbon Monoxide (CO) Detection and Warning Equipment*14, and shall be consistent with requirements of applicable laws, codes, and standards.add brief description>>
The responsible person's signature on this document indicates that the installation meets the applicable requirements specified in Table E – Other Requirements.	

For information and data collection only. Not valid until registered with a HERS provider.

G. Air Moving Equipment	
The items listed below (7.1 through 7.3) correspond to the information given in ASHRAE 62.2 Section 7 "Air-Moving Equipment". Refer also to Chapter 4.6 of the Residential Compliance Manual (Section 4.6.6) for information describing these requirements in more detail. The signature of the Responsible Person in the declaration statement below certifies that the building complies with these requirements specified in ASHRAE 62.2 Section 7.1 through 7.3 if applicable.	
01	**7.1 Selection and Installation.** Ventilation devices and equipment shall be tested and listed in accordance with specific standards. Installations of systems or equipment shall be carried out in accordance with manufacturers' design requirements and installation instructions.
02	**7.2 Sound Ratings for Fans.** Ventilation fans shall be rated for sound at no less than the minimum airflow rate required by this standard, as noted below. These sound ratings shall be at a minimum of 0.1 in. w.c. (25 Pa) static pressure. 7.2.1 **Whole-Building or Continuous Ventilation Fans.** These fans shall be rated for sound at a maximum of 1.0 sone. 7.2.2 **Intermittent Local Exhaust Fans.** Fans used to comply with Section 5.2 shall be rated for sound at a maximum of 3 sone, unless their maximum rated airflow exceeds 400 cfm (200 L/s). (Some exceptions may apply.)
03	**7.3 Multibranch Exhaust Ducting.** If more than one of the exhaust fans in a dwelling unit shares a common exhaust duct, each fan shall be equipped with a back-draft damper to prevent the recirculation of exhaust air from one room to another through the exhaust ducting system.
The responsible person's signature on this document indicates that the installation meets the applicable requirements specified in Table F – Air Moving Equipment.	

H. Multifamily Buildings - Other Requirements <<only print this section if multi-family is selected in row A.1>>	
The items listed below correspond to the information given in ASHRAE 62.2 Section 8 "Multifamily Buildings". Refer also to Chapter 4.6 of the Residential Compliance Manual (Section 4.6.5) for information describing these requirements in more detail. The signature of the Responsible Person in the declaration statement below certifies that the building complies with these requirements specified in ASHRAE 62.2 Section 8, if applicable.	
01	**8.4.1 Transfer Air.** Measures shall be taken to minimize air movement across envelope components separating dwelling units, including sealing penetrations in the common walls, ceilings, and floors of each unit and by sealing vertical chases adjacent to the units. All doors between dwelling units and common hallways shall be gasketed or made substantially airtight. **8.4.1.1 Compliance.** One method of demonstrating compliance with Section 8.4.1 shall be to verify a leakage rate below a maximum of 0.2 cfm per ft^2 (100 L/s per 100 m^2) of the dwelling unit envelope area (i.e., the sum of the area of the walls between dwelling units, exterior walls, ceiling and floor) at a test pressure of 50 Pa by a blower door test. The test shall be conducted with the dwelling unit as if it were exposed to outdoor air on all sides, top, and bottom by opening doors and windows of adjacent dwelling units.
The responsible person's signature on this document indicates that the installation meets the applicable requirements specified in Table G – Multifamily Buildings	

For information and data collection only. Not valid until registered with a HERS provider

CERTIFICATE OF VERIFICATION		CF3R-MCH-27-H
Indoor Air Quality and Mechanical Ventilation		(Page 5 of 5)
Project Name:	Enforcement Agency:	Permit Number:
Dwelling Address:	City	Zip Code

DOCUMENTATION AUTHOR'S DECLARATION STATEMENT	
1. I certify that this Certificate of Verification documentation is accurate and complete.	
Documentation Author Name:	Documentation Author Signature:
Company:	Date Signed:
Address:	CEA/HERS Certification Information (if applicable):
City/State/Zip:	Phone:

RESPONSIBLE PERSON'S DECLARATION STATEMENT

I certify the following under penalty of perjury, under the laws of the State of California:

1. The information provided on this Certificate of Verification is true and correct.
2. I am the certified HERS Rater who performed the verification identified and reported on this Certificate of Verification (responsible rater).
3. The installed features, materials, components, manufactured devices, or system performance diagnostic results that require HERS verification identified on this Certificate of Verification comply with the applicable requirements in Reference Appendices RA2, RA3, and the requirements specified on the Certificate of Compliance for the building approved by the enforcement agency.
4. The information reported on applicable sections of the Certificate(s) of Installation (CF2R) signed and submitted by the person(s) responsible for the construction or installation conforms to the requirements specified on the Certificate(s) of Compliance (CF1R) approved by the enforcement agency.
5. I will ensure that a registered copy of this Certificate of Verification shall be posted, or made available with the building permit(s) issued for the building, and made available to the enforcement agency for all applicable inspections. I understand that a registered copy of this Certificate of Verification is required to be included with the documentation the builder provides to the building owner at occupancy.

BUILDER OR INSTALLER INFORMATION AS SHOWN ON THE CERTIFICATE OF INSTALLATION	
Company Name (Installing Subcontractor, General Contractor, or Builder/Owner):	
Responsible Builder or Installer Name:	CSLB License:

HERS PROVIDER DATA REGISTRY INFORMATION	
Sample Group Number (if applicable):	Dwelling Test Status in Sample Group (if applicable)

HERS RATER INFORMATION	
HERS Rater Company Name:	
Responsible Rater Name:	Responsible Rater Signature:
Responsible Rater Certification Number w/ this HERS Provider	Date Signed:

For information and data collection only. Not valid until registered with a HERS provider

User Instructions – MCH-27d:

Section A. General Information

1 This information is automatically pulled from the CF-2R-MCH-27d. If building type does not match this entry, it can be overwritten by rater but it will be flagged as a possible fail. Choices are "single family" and "low-rise multifamily"
2 This information is automatically pulled from the CF-2R-MCH-27d. If conditioned floor area does not match this entry, it can be overwritten by rater but it will be flagged as a possible fail. Value to be entered in the field equals the conditioned floor area of the space, in square feet.
3 This information is automatically pulled from the CF-2R-MCH-27d. If number of bedrooms not match this entry, it can be overwritten by rater but it will be flagged as a possible fail. Value to be entered in the field equals the number of bedrooms in the home.
4 This information is automatically pulled from the CF-2R-MCH-27d. If ventilation operation schedule does not match this entry, it can be overwritten by rater from list but it will be flagged as a possible fail. Select the Ventilation Operation Schedule method used from the choices provided:
- Continuous
- Intermittent

5 This information is automatically pulled from the CF-2R-MCH-27d. If whole-building ventilation rate calculation method does not match this entry, it can be overwritten by rater from list but it will be flagged as a possible fail. Select the Whole Building Ventilation Rate Calculation Method from the choices provided:
- Fan Ventilation Rate Method
- Total Ventilation Rate Method

6 This information is automatically pulled from the CF-2R-MCH-27d. If whole-building ventilation system type does not match this entry, it can be overwritten by rater from list but it will be flagged as a possible fail. Select the Whole Building Ventilation System Type from the choices provided:
- Standalone - Exhaust
- Standalone - Supply
- Standalone - Balanced
- Central Fan Integrated (CFI)

Section B. Whole Building Continuous Ventilation – Total Ventilation Rate Method

1 This value is automatically calculated using 62.2 equation 4.2a. The equation used to calculate this value in the field equals:
   a. If A01= Single Family then [(0.03 x conditioned floor area A02) + 7.5(Number of bedrooms A03 + 1)] = Required Continuous Whole-Building Ventilation Rate
   b. If A01= Multifamily then [(0.05 x conditioned floor area A02) + 7.5(Number of bedrooms A03 + 1)] = Required Continuous Whole-Building Ventilation Rate
2 This information is automatically pulled from the registered ENV-20a-d row A02
3 This value is automatically calculated. The equation used to calculate this value in the field equals: (CFM50 B02 x 0.055)= Equivalent Leakage Area (ELA)
4 User entered value equals the vertical distance from the lowest above-grade floor to the highest ceiling in feet
5 User entered value equals the Weather Shielding Factor (wsf) from 62.2 Appendix X Table X1.
6 This value is automatically calculated using 62.2 equation 4.5. The equation used to calculate this value in the field equals: [1000 x (Equivalent Leakage Area (ELA) row B02/ conditioned floor area A02) x (Vertical Distance B04/8.2)^0.4]= Normalized Leakage (NL)
7 This value is automatically calculated using 62.2 equation 4.6a. The equation used to calculate this value in the field equals: (Normalized Leakage (NL) row B06 x conditioned floor area A02)/7.3= Ventilation Provided by Ventilation
8 This value is automatically calculated using 62.2 equation 4.6a. The equation used to calculate this value in the field equals: (Normalized Leakage (NL) row B06 x conditioned floor area A02)/7.3= Ventilation Provided by Infiltration in (CFM)
9 This value is automatically calculated using 62.2 equation 4.7. The equation used to calculate this value in the field equals: (Required Continuous Whole-Building Ventilation Rate row B01 - Ventilation Provided by Infiltration row B08 = Required Continuous Whole-Building Ventilation Rate in (CFM)

Section C. Intermittent Ventilation

1 Intermittent ventilation requires controls that ensure a regular operating schedule every 24 hours. Within a 24 hour period there will be one or more regular on off cycles. For a single on off cycle, enter the on time in hours. This value will be verified by a HERS rater.
2 Intermittent ventilation requires controls that ensure a regular operating schedule every 24 hours. Within a 24 hour period there will be one or more regular on off cycles. For a single on off cycle, enter the off time in hours. This value will be verified by a HERS rater.
3 This row performs an automatic check. The intermittent ventilation system must operate at least once every 24 hours. For this to occur, the on time plus the off time in a single on off cycle must be less than 24 hours. If this is true, "OK" will appear. If this is not true, an error will appear here and correct values will need to be entered into Rows C01 and C02. The equation used to calculate this value in the field equals: Time on in hours row C01 + Time off in hours row C02.

For information and data collection only. Not valid until registered with a HERS provider

4 This value is automatically calculated. It is the daily fractional on time (*f*) used in 62.2 Table 4.2. A value of 0.60 means that in a 24 hour period the fan will run 60% of the time. The equation used to calculate this value in the field equals: On time in Hours row C01/(On time in Hours row C01 + Off time in Hours row C02)= Daily fractional on time

5 This row performs an automatic check. The ventilation system must operate at least 10% of the time. Row C04 must be greater than or equal to 0.10. If this is true, "OK" will appear. If this is not true, an error message will appear here and correct values will need to be entered into Rows C01 and C02.

6 This value is automatically calculated. It is the turnover (N) used in 62.2 Table 4.2. The equation used to calculate this value in the field equals: [12.8 x Continuous Whole-Building Ventilation Rate row B01 x (On time in Hours row C01 + Off time in Hours row C02)]/ Conditioned floor area of dwelling unit row A02= Turnover N

7 User entered value use the daily fractional time (*f*) from Row C04 and the turnover (N) from Row C06 to determine the ventilation effectiveness value (e) from 62.2 table 4.2.

8 This value is automatically calculated using 62.2 equation 4.8. It represents the required airflow in cfm that must be delivered during the ventilation system on times. This value will be verified by a HERS rater. The equation used to calculate this value in the field equals: Continuous Whole-Building Ventilation Rate row B01/(Daily fractional on time row C04 x ventilation effectiveness value row C07= required Intermittent ventilation rate

9 User entered value equals the installed intermittent ventilation rate in (CFM)

10 This information is automatically pulled from the registered MCH-22 row B07 Note: this line only visible if CFI System selected in A06

11 This information is automatically calculated based on C10 Note: this line only visible if CFI System selected in A06

For information and data collection only. Not valid until registered with a HERS provider

RETURN DUCT DESIGN AND AIR FILTER DEVICE SIZING ACCORDING TO TABLES 150.0-C OR D

CERTIFICATE OF VERIFICATION		CF3R-MCH-28-H
Return Duct Design and Air Filter Device Sizing According to Tables 150.0-C or D		(Page 1 of 3)
Project Name:	Enforcement Agency:	Permit Number:
Dwelling Address:	City	Zip Code

A. System Information		
01	System Identification or Name	
02	System Location or Area Served	
03	Nominal Cooling Capacity (tons) of Condenser	
04	Number of Return Ducts	
05	Notes	

B. One Return Duct Use of this table is only applicable if the input to RowA04 is "One Return Duct"		
01	Minimum Return Duct Diameter (inches)	
02	Installed Return Duct Diameter (inches)	
03	Minimum Total Return Filter Grille Gross Area (inch$^{2)}$	
04	Installed Total Return Filter Grille Gross Area (inch^2)	
05	Compliance Statement:	

C. Two Return Ducts (Use of this table is only applicable if the input to RowA04 is "Two Return Ducts")		
01	Minimum Return Duct1 Diameter (inches)	
02	Installed Return Duct1 Diameter (inches)	
03	Minimum Return Duct2 Diameter (inches)	
04	Installed Return Duct2 Diameter (inches)	
05	Minimum Total Return Filter Grille Gross Area (inch^2)	
06	Installed Total Return Filter Grille Gross Area (inch^2)	
07	Compliance Statement:	

D Additional Requirements For Compliance	
01	Qualification for the Alternative to Section 150.0(m)13B requires that the ducted space conditioning system shall not use zoning dampers. Systems that use zoning dampers shall comply with the requirements of Section 150.0(m)15.
02	The return duct length for each return air filter grille shall not exceed 30 linear feet.
03	The return duct(s) shall not contain more than a total of 180 degrees of bend.
04	If the return duct contains more than 90 degrees of bend, one of the bends shall be a metal elbow.

For information and data collection only. Not valid until registered with a HERS provider

RETURN DUCT DESIGN AND AIR FILTER DEVICE SIZING ACCORDING TO TABLES 150.0-C OR D

Project Name:	Enforcement Agency:	Permit Number:
Dwelling Address:	City	Zip Code

05	Return grille devices shall be labeled in accordance with the requirements in section 150.0(m)12A to disclose the grille's design airflow rate and a maximum allowable clean-filter pressure drop of 12.5 Pa (0.05 inches water) for the air filter media as rated in accordance with AHRI Standard 680 for the design airflow rate for the return grille.	
06	Verification Status	

If Verification Status for this table indicates "Fail", the reason shall be described in the correction notes for this table.

Correction Notes for this table:

The responsible person's signature on this document indicates that the installation meets these requirements specified in Table D.

For information and data collection only. Not valid until registered with a HERS provider

RETURN DUCT DESIGN AND AIR FILTER DEVICE SIZING ACCORDING TO TABLES 150.0-C OR D

Project Name:	Enforcement Agency:	Permit Number:
Dwelling Address:	City	Zip Code

DOCUMENTATION AUTHOR'S DECLARATION STATEMENT

1. I certify that this Certificate of Verification documentation is accurate and complete.

Documentation Author Name:	Documentation Author Signature:
Company:	Date Signed:
Address:	CEA/HERS Certification Information (if applicable):
City/State/Zip:	Phone:

RESPONSIBLE PERSON'S DECLARATION STATEMENT

I certify the following under penalty of perjury, under the laws of the State of California:

1. The information provided on this Certificate of Verification is true and correct.
2. I am the certified HERS Rater who performed the verification identified and reported on this Certificate of Verification (responsible rater).
3. The installed features, materials, components, manufactured devices, or system performance diagnostic results that require HERS verification identified on this Certificate of Verification comply with the applicable requirements in Reference Appendices RA2, RA3, and the requirements specified on the Certificate of Compliance for the building approved by the enforcement agency.
4. The information reported on applicable sections of the Certificate(s) of Installation (CF2R) signed and submitted by the person(s) responsible for the construction or installation conforms to the requirements specified on the Certificate(s) of Compliance (CF1R) approved by the enforcement agency.
5. I will ensure that a registered copy of this Certificate of Verification shall be posted, or made available with the building permit(s) issued for the building, and made available to the enforcement agency for all applicable inspections. I understand that a registered copy of this Certificate of Verification is required to be included with the documentation the builder provides to the building owner at occupancy.

BUILDER OR INSTALLER INFORMATION AS SHOWN ON THE CERTIFICATE OF INSTALLATION

Company Name (Installing Subcontractor, General Contractor, or Builder/Owner):	
Responsible Builder or Installer Name:	CSLB License:

HERS PROVIDER DATA REGISTRY INFORMATION

Sample Group Number (if applicable):	Dwelling Test Status in Sample Group (if applicable)

HERS RATER INFORMATION

HERS Rater Company Name:	
Responsible Rater Name:	Responsible Rater Signature:
Responsible Rater Certification Number w/ this HERS Provider	Date Signed:

For information and data collection only. Not valid until registered with a HERS provider

INSTALLER INSTRUCTIONS – MCH-28

Section A. System Information

01. *System Identification or Name:* the system identification/name is automatically pulled from the CF2R-MCH-28.
02. *System Location or Area Served:* the location/area served is automatically pulled from the CF2R-MCH-28.
03. *Nominal Cooling Capacity (tons) of Condenser:* Enter the installed condenser nominal cooling capacity in tons, data may be found on the manufacturer documentation.
04. *Number of Return Ducts:* Select the number of return ducts from the options given in the pull down list, either one or two return ducts.
05. *Notes:* If the installed condenser nominal cooling capacity does not match the Installation Certificate, a note indicating the discrepancy will be shown.

<<Only shown if the input to row A04 is "One Return Duct>>

Section B. One Return Duct

01. *Minimum Return Duct Diameter:* This field is automatically calculated based on row A03.
02. *Installed Return Duct Diameter:* Enter the installed return duct diameter (inches).
03. *Minimum Total Return Filter Grille Gross Area:* This field is automatically calculated based on row A03.
04. *Installed Total Return Filter Grille Gross Area:* Enter the installed return filter grille gross area (inch^2). The area is equal to the length (inches) multiplied by the width (inches).
05. *Compliance Statement:* This field is automatically populated based on the inputs to rows B02 and B04.

<<Only shown if the input to row A04 is "Two Return Ducts>>

Section C. Two Return Ducts

01. *Minimum Return Duct1 Diameter:* This field is automatically calculated based on row A03.
02. *Installed Return Duct1 Diameter:* Enter the diameter (inches) for the first return duct run.
03. *Minimum Return Duct2 Diameter:* This field is automatically calculated based on row A03.
04. *Installed Return Duct2 Diameter:* Enter the diameter (inches) for the second return duct run.
05. *Minimum Total Return Filter Grille Gross Area:* This field is automatically calculated based on row A03.
06. *Installed Total Return Filter Grille Gross Area:* Enter the total return filter grille gross area by summing up the two grille areas. The area of each grill is equal to the length (inches) multiplied by the width (inches).
07. *Compliance Statement:* This field is automatically populated based on the inputs to row C02, C04 and C06.

D Additional Requirements for Compliance

06. Verification Status: Select from the pull down list either "Pass" or "Fail", indicating if the installation meets the additional requirements of Table D.

Correction Notes for this Table: If the installation fails to comply with these additional requirements, the correction must be specified.

For information and data collection only. Not valid until registered with a HERS provider

DUCT SURFACE AREA REDUCTION; R-VALUE; BURIED DUCTS COMPLIANCE CREDIT

CERTIFICATE OF VERIFICATION		CF3R-MCH-29-H
Duct Surface Area Reduction; R-Value; Buried Ducts Compliance Credit		(Page 1 of 3)
Project Name:	Enforcement Agency:	Permit Number:
Dwelling Address:	City	Zip Code

Note: Submit one Certificate of installation for each duct system that must demonstrate compliance in the dwelling.

A. DUCT SYSTEM INFORMATION		
01.	Duct System Name or Identification/Tag:	
02.	Duct System Location or Area Served:	
03	Status - Duct Surface Area Reduction And R-Value Compliance Credit	
04	Status - Buried Ducts Compliance Credit	
05	Status - Deeply Buried Ducts Compliance Credit	

<<this table only shown if Duct Surface Area Reduction And R-Value Compliance Credit claimed on CF1R>>

B. DUCT SURFACE AREA REDUCTION AND R-VALUE COMPLIANCE CREDIT Credit is available for supply duct systems with reduced surface area in unconditioned space with varying combinations of higher performance insulation if the system complies with the following requirements:		
01	The duct system design shall be detailed in the special features section of the CF1R-PRF-01-E approved by the enforcement agency.	
02	A duct design layout that conforms to the duct system design details in the special features section of the CF1R-PRF-01-E shall be documented on the building design plans approved by the enforcement agency.	
03	The duct system installation, including duct sizes and locations of supply & return registers shall conform to the duct system design layout approved by the enforcement agency.	
04	The duct system installation shall be verified by a HERS rater according to the requirements in RA3.1.4.1.4.	
05	The duct system installation shall not have severely twisted or compressed sections that would restrict required operating airflow.	
06	Verification Status:	
If Verification Status for this table indicates "Fail", the reason shall be described in the correction notes for this table.		
Correction Notes for this table:		
The responsible person's signature on this document indicates that the installation meets these requirements specified in Table B.		

<<this table only shown if Buried Ducts Compliance Credit claimed on CF1R>>

C. BURIED DUCTS COMPLIANCE CREDIT Ducts partly or completely buried in blown attic insulation in dwelling units meeting the requirements for verified quality insulation installation may take credit for increased effective duct insulation if the system complies with the following requirements:		
01	The duct system design shall be detailed in the special features section of the CF1R-PRF-01-E approved by the enforcement agency.	
02	A duct design layout that conforms to the duct system design details in the special features section of the CF1R-PRF-01-E shall be documented on the building design plans approved by the enforcement agency.	
03	The duct system installation, including duct sizes and locations of supply & return registers shall conform to the duct system design layout approved by the enforcement agency.	
04	The duct system installation shall be verified by a HERS rater according to the requirements in RA3.1.4.1.5.	
05	The duct system installation shall not have severely twisted or compressed sections that would restrict required operating airflow.	
06	The dwelling shall comply with all Quality Insulation Installation requirements as documented on the applicable CF2R and CF3R.	
07	Verification Status:	
If Verification Status for this table indicates "Fail", the reason shall be described in the correction notes for this table.		
Correction Notes for this table:		
The responsible person's signature on this document indicates that the installation meets these requirements specified in Table C.		

For information and data collection only. Not valid until registered with a HERS provider

CERTIFICATE OF VERIFICATION		CF3R-MCH-29-H
Duct Surface Area Reduction; R-Value; Buried Ducts Compliance Credit		(Page 2 of 3)
Project Name:	Enforcement Agency:	Permit Number:
Dwelling Address:	City	Zip Code

<<this table only shown if Deeply Buried Ducts Compliance Credit claimed on CF1R>>

D. DEEPLY BURIED DUCTS COMPLIANCE CREDIT Duct segments deeply buried in lowered areas of ceiling and covered by at least 3.5 inches of insulation above the top of the duct insulation jacket may claim effective insulation of R-25 for fiberglass insulation and R-31 for cellulose insulation if the system complies with the following requirements:		
01	The duct system design shall be detailed in the special features section of the CF1R-PRF-01-E approved by the enforcement agency.	
02	A duct design layout that conforms to the duct system design details in the special features section of the CF1R-PRF-01-E shall be documented on the building design plans approved by the enforcement agency.	
03	The duct system installation, including duct sizes and locations of supply & return registers shall conform to the duct system design layout approved by the enforcement agency.	
04	The duct system installation shall be verified by a HERS rater according to the requirements in RA3.1.4.1.6.	
05	The duct system installation shall not have severely twisted or compressed sections that would restrict required operating airflow.	
06	The dwelling shall comply with all Quality Insulation Installation requirements as documented on the applicable CF2R and CF3R.	
07	Verification Status:	
If Verification Status for this table indicates "Fail", the reason shall be described in the correction notes for this table.		
Correction Notes for this table:		
The responsible person's signature on this document indicates that the installation meets these requirements specified in Table D.		

For information and data collection only. Not valid until registered with a HERS provider

DUCT SURFACE AREA REDUCTION; R-VALUE; BURIED DUCTS COMPLIANCE CREDIT

CERTIFICATE OF VERIFICATION		CF3R-MCH-29-H
Duct Surface Area Reduction; R-Value; Buried Ducts Compliance Credit		(Page 3 of 3)
Project Name:	Enforcement Agency:	Permit Number:
Dwelling Address:	City	Zip Code

DOCUMENTATION AUTHOR'S DECLARATION STATEMENT	
1. I certify that this Certificate of Verification documentation is accurate and complete.	
Documentation Author Name:	Documentation Author Signature:
Company:	Date Signed:
Address:	CEA/HERS Certification Information (if applicable):
City/State/Zip:	Phone:

RESPONSIBLE PERSON'S DECLARATION STATEMENT

I certify the following under penalty of perjury, under the laws of the State of California:

1. The information provided on this Certificate of Verification is true and correct.
2. I am the certified HERS Rater who performed the verification identified and reported on this Certificate of Verification (responsible rater).
3. The installed features, materials, components, manufactured devices, or system performance diagnostic results that require HERS verification identified on this Certificate of Verification comply with the applicable requirements in Reference Appendices RA2, RA3, and the requirements specified on the Certificate of Compliance for the building approved by the enforcement agency.
4. The information reported on applicable sections of the Certificate(s) of Installation (CF2R) signed and submitted by the person(s) responsible for the construction or installation conforms to the requirements specified on the Certificate(s) of Compliance (CF1R) approved by the enforcement agency.
5. I will ensure that a registered copy of this Certificate of Verification shall be posted, or made available with the building permit(s) issued for the building, and made available to the enforcement agency for all applicable inspections. I understand that a registered copy of this Certificate of Verification is required to be included with the documentation the builder provides to the building owner at occupancy.

BUILDER OR INSTALLER INFORMATION AS SHOWN ON THE CERTIFICATE OF INSTALLATION	
Company Name (Installing Subcontractor, General Contractor, or Builder/Owner):	
Responsible Builder or Installer Name:	CSLB License:
HERS PROVIDER DATA REGISTRY INFORMATION	
Sample Group Number (if applicable):	Dwelling Test Status in Sample Group (if applicable)
HERS RATER INFORMATION	
HERS Rater Company Name:	
Responsible Rater Name:	Responsible Rater Signature:
Responsible Rater Certification Number w/ this HERS Provider	Date Signed:

For information and data collection only. Not valid until registered with a HERS provider

Instructions

A. DUCT INFORMATION

01. System Name or Identification/Tag: This field is auto filled as referenced from the CF2R-MCH-29. This provides an identification name or tag name that uniquely identifies the duct system. If there is a mechanical plan for the system, the tag name may be given on the plans.
02. System Location or Area Served: This field is auto filled as referenced from the CF2R-MCH-29. This provides a brief description of the area served by the duct system (e.g. upstairs; downstairs).
03. Status – Duct Surface Area Reduction and R-Value Compliance Credit: This field is auto filled from the CF2R-MCH-29 indicating if the credit is being used. If not, then N/A will be displayed.
04. Status – Buried Ducts Compliance Credit: This filed is auto filled from the CF2R-MCH-29 indicating if the credit is being used. If not, then "N/A" will be displayed.
05. Status – Deeply Buried Ducts Compliance Credit: This field is auto filled from the CF2R-MCH-29 indicating if the credit is being used. If not, then "N/A" will be displayed.

B. SUPPLY DUCT SURFACE AREA REDUCTION AND R-VALUE COMPLIANCE CREDIT

06. Verification Status: Pick "Pass" or "Fail" from the pull down list indicating whether the installation meets the installation criteria for the compliance credit.

The responsible person's signature on the CF3R-MCH-29-H document indicates that the installation meets these requirements specified in Table B.

C. BURIED DUCTS COMPLIANCE CREDIT

07. Verification Status: Pick "Pass" or "Fail" from the pull down list indicating whether the installation meets the installation criteria for the compliance credit.

In order receive the credit, the supply duct system must comply with the requirements listed in this Table C. The responsible person's signature on the CF3R-MCH-29-H document indicates that the installation meets these requirements specified in Table C.

D. DEEPLY BURIED DUCTS COMPLIANCE CREDIT

07. Verification Status: Pick "Pass" or "Fail" from the pull down list indicating whether the installation meets the installation criteria for the compliance credit.

In order receive the credit, the supply duct system must comply with the requirements listed in this Table D. The responsible person's signature on the CF3R-MCH-29-H document indicates that the installation meets these requirements specified in Table D.

For information and data collection only. Not valid until registered with a HERS provider

Central Fan Ventilation Cooling Systems (VCS)

CERTIFICATE OF VERIFICATION		CF3R-MCH-30-H
Central Fan Ventilation Cooling Systems (VCS)		(Page 1 of 2)
Project Name:	Enforcement Agency:	Permit Number:
Dwelling Address:	City	Zip Code

Central Fan Ventilation Cooling System (VCS)

When the Certificate of Compliance indicates a Central Fan Ventilation Cooling system is installed, the following items must be verified by the installer and also by a HERS Rater on a corresponding CF2R-MCH30.

A. Central Fan Ventilation Cooling System (VCS) Equipment Information		
01	System Name or Identification/Tag	
02	System Location or Area Served	
03	Central Fan VCS Equipment - Manufacturer Name	
04	Central Fan VCS Equipment - Manufacturer Model #	
05	Central Fan VCS Equipment - Fan Type	
06	Central Fan VCS Equipment - Certification Status	
07	Duct Leakage Verification Status	
08	Fan Efficacy Verification Status	
09	Central Fan Ventilation Cooling System controls: includes installation of an indoor thermostat	
10	Central Fan Ventilation Cooling System controls: includes installation of an outdoor temperature sensor to initiate and terminate ventilation cooling operation automatically.	
11	Central Fan Ventilation Cooling System controls: includes installation of an air handler temperature sensor to ensure correct outdoor air damper position.	

B. Compliance Statement

C. Additional Requirements		
01	Qualification for Central Fan Ventilation Cooling Compliance Credit requires use of approved models Certified to the Energy Commission for use for Ventilation Cooling, and listed in the Special Case Appliances Directory on the Energy Commission Website.	
02	Variable speed motor systems shall be capable of varying system airflow rate in a continuous range between full air flow rate (100%) and a minimum airflow rate of no more than 25% of the full airflow rate.	
03	The Central Fan Ventilation Cooling System manufacturer shall provide detailed system operation documentation to the building owner that describes how to configure the system controls and operate the system to obtain the maximum energy savings benefit. The manufacturer's system operation documentation shall also describe how the system's control strategy is implemented; how the fan speed is controlled during ventilation cooling mode; and how ventilation cooling rates are determined. System target ventilation cooling rate calculations (if applicable) shall occur at time intervals of 24 hours or less to ensure the system responds correctly to changes in weather patterns.	
04	Verification Status:	
If Verification Status for this table indicates "Fail", the reason shall be described in the correction notes for this table.		
Correction Notes for this table: <<user input text>>		
The responsible person's signature on this document indicates that the installation meets these requirements specified in Table C.		

For information and data collection only. Not valid until registered with a HERS provider

CERTIFICATE OF VERIFICATION		CF3R-MCH-30-H
Central Fan Ventilation Cooling Systems (VCS)		(Page 2 of 2)
Project Name:	Enforcement Agency:	Permit Number:
Dwelling Address:	City	Zip Code

DOCUMENTATION AUTHOR'S DECLARATION STATEMENT

1. I certify that this Certificate of Verification documentation is accurate and complete.

Documentation Author Name:	Documentation Author Signature:
Company:	Date Signed:
Address:	CEA/HERS Certification Information (if applicable):
City/State/Zip:	Phone:

RESPONSIBLE PERSON'S DECLARATION STATEMENT

I certify the following under penalty of perjury, under the laws of the State of California:

1. The information provided on this Certificate of Verification is true and correct.
2. I am the certified HERS Rater who performed the verification identified and reported on this Certificate of Verification (responsible rater).
3. The installed features, materials, components, manufactured devices, or system performance diagnostic results that require HERS verification identified on this Certificate of Verification comply with the applicable requirements in Reference Appendices RA2, RA3, and the requirements specified on the Certificate of Compliance for the building approved by the enforcement agency.
4. The information reported on applicable sections of the Certificate(s) of Installation (CF2R) signed and submitted by the person(s) responsible for the construction or installation conforms to the requirements specified on the Certificate(s) of Compliance (CF1R) approved by the enforcement agency.
5. I will ensure that a registered copy of this Certificate of Verification shall be posted, or made available with the building permit(s) issued for the building, and made available to the enforcement agency for all applicable inspections. I understand that a registered copy of this Certificate of Verification is required to be included with the documentation the builder provides to the building owner at occupancy.

BUILDER OR INSTALLER INFORMATION AS SHOWN ON THE CERTIFICATE OF INSTALLATION

Company Name (Installing Subcontractor, General Contractor, or Builder/Owner):	
Responsible Builder or Installer Name:	CSLB License:

HERS PROVIDER DATA REGISTRY INFORMATION

Sample Group Number (if applicable):	Dwelling Test Status in Sample Group (if applicable)

HERS RATER INFORMATION

HERS Rater Company Name:	
Responsible Rater Name:	Responsible Rater Signature:
Responsible Rater Certification Number w/ this HERS Provider	Date Signed:

For information and data collection only. Not valid until registered with a HERS provider.

Instructions for MCH-30

Section A. Whole House Fan Equipment Information

1. Enter the Central Fan Ventilation Cooling System (VCS) Name or identification tag to help identify this system from other systems in the house. This field is automatically filled in as referenced from the MCH-01 description for this system.
2. Enter the Location or Area Served by the Central Fan VCS. This is a tag to distinguish this system from other systems in the house. This field is automatically filled in as referenced from the MCH-01 description for this system.
3. Enter the Central Fan VCS Manufacturer Name.
4. Enter the Central Fan VCS Manufacturer Model Number.
5. The Central Fan VCS fan type is specified by the performance approach software. This field is filled in automatically as referenced from the CF-1R. The choices are "Fixed" or "Variable". Variable fans receive more compliance credit. The installed fan type should match the fan type specified on the CF1R.
6. HERS Rater must verify/confirm that the Central Fan VCS Equipment is included in the Energy Commission listing of approved VCS devices and that the fan type, "Fixed" or "Variable", indicated in Row A05 matches what is shown on the list.
7. Compliance credit for Central Fan VCS also requires that the system conforms to the maximum Duct Leakage verification requirements. This row automatically queries the project data to confirm that a MCH20 has been registered indicating that the system passed the duct leakage criterion.
8. Compliance credit for Central Fan VCS also requires that the system pass the Fan Efficacy requirements. This row automatically queries the project data to confirm that a MCH22 Fan Efficacy verification has been registered indicating that the system passed.
9. HERS Rater must confirm that the Central Fan VCS includes a properly installed indoor thermostat designed specifically for use with the installed VCS.
10. HERS Rater must confirm that the Central Fan VCS includes a properly installed outdoor temperature sensor to initiate and terminate ventilation cooling operation automatically.
11. HERS Rater must confirm that the Central Fan VCS includes a properly installed air handler temperature sensor to verify damper position.

Section C. Additional Requirements

4. HERS Rater to select from list:
   Pass selection signifies that all of the additional requirements have been implemented.
   Fail selection signifies that some of the additional requirement have not been implemented. HERS Rater notes detailing failed additional requirements should be entered in Correction Notes section.

For information and data collection only. Not valid until registered with a HERS provider

SINGLE DWELLING UNIT HOT WATER SYSTEM DISTRIBUTION

CERTIFICATE OF VERIFICATION		CF3R-PLB-20-H
Single Dwelling Unit Hot Water System Distribution		(Page 1 of 4)
Project Name:	Enforcement Agency:	Permit Number:
Dwelling Address:	City	Zip Code

A. General System Information		
01	Water Heating System Name:	
02	Dwelling Unit Distribution Type:	

B. MANDATORY MEASURES FOR ALL DOMESTIC HOT WATER DISTRIBUTION SYSTEMS	
01	Equipment shall meet the applicable requirements of the Appliance Efficiency Regulations (Section 110.3(b)1).
02	Unfired Storage Tanks are insulated with an external R-12 or combination of R-16 internal and external Insulation. (Section 110.3(c)4).
03	All piping with a nominal diameter of 3/4 inch (19 millimeter) or larger must be insulated with R3.6 or 1" of insulation. (Section 150.0(j))
04	All hot water piping insulated from the water heater to the kitchen fixture or appliance with R3.6 or 1" of insulation (Section 150.0(j))
05	The first 5 feet of hot and cold water pipes shall be insulated from the storage tank with R3.6 or 1" of insulation. (Section 150.0(j))
06	Piping from the heating source to storage tank or between tanks must be insulated (Section 150.0(j))
07	All piping associated with a domestic hot water recirculation system regardless of the pipe diameter must be insulated (Section 150.0(j))
08	Piping from the heating source to storage tank or between tanks must be insulated (Section 150.0(j))
09	Piping buried below grade must be installed in a water proof and non-crushable casing or sleeve that allows for installation, removal, and replacement of the enclosed pipe and insulation. (Section 150.0(j))
10	All elbows and tees shall be fully insulated. (RA4.4.1)
11	Where insulation is required, no piping shall be visible due to insulation voids. (RA4.4.1)
12	All insulation shall fit tightly to the pipe (RA4.4.1)
13	The maximum length per dwelling unit of 1 inch diameter piping in a non-recirculating system is less than 15 feet (Section 150.0(j))
14	**For Gas or Propane Water Heaters:** Ensure the following are installed (Section 150.0(n)) 1. A 120V electrical receptacle is within 3 feet from the water heater and accessible with no obstructions 2. A Category III or IV vent, or a Type B vent with straight pipe between outside and water heater 3. A condensate drain no more than 2 inches higher than the base on water heater for natural draining 4. A gas supply line with capacity of at least 200,000 Btu/Hr
The responsible person's signature on this Certificate of Installation indicates the system identified on this Certificate has complied with all applicable requirements specified in this Table.	

C. (PIC-H) HERS-Verified Pipe Insulation Credit	
01	HERS verification of All hot water piping 1" and smaller shall be insulated to R-3.6 and be 1 inch thick. Piping with a diameter larger than 1 inch shall comply with the insulation requirements in Table 120.3-A.
The responsible person's signature on this Certificate of Installation indicates the system identified on this Certificate has complied with all applicable requirements specified in this Table.	

For information and data collection only. Not valid until registered with a HERS provider

CERTIFICATE OF VERIFICATION		CF3R-PLB-20-H
Single Dwelling Unit Hot Water System Distribution		(Page 2 of 4)
Project Name:	Enforcement Agency:	Permit Number:
Dwelling Address:	City	Zip Code

D. (PP-H)-HERS-Verified Parallel Piping	
01	Central manifold have 8 feet or less of pipe between manifold and water heater
02	Manifolds that include valves the manifold must be readily accessible in accordance with the plumbing code.
03	Hot water distribution system piping from the manifold to the fixtures and appliances must take the most direct path. Ex Piping from a second story manifold cannot supply the first floor
04	The hot water distribution piping must be separated by at least two inches from any other hot water supply piping
The responsible person's signature on this Certificate of Installation indicates the system identified on this Certificate has complied with all applicable requirements specified in this Table.	

E. (CHWDS-H) HERS-Verified Compact Hot Water Distribution System		
01	Number of floors in the building	
02	Conditioned floor area	
03	Value for HERS verification –The maximum measured distance in feet of a straight line from the water heater to the furthest point of use For the floor area served.	
The responsible person's signature on this Certificate of Installation indicates the system identified on this Certificate has complied with all applicable requirements specified in this Table.		

F. (POU-H)-HERS-Verified Point of Use		
01	Determine the allowed length of piping for the longest run terminating in: 3/8" - For only one pipe size = 15ft For multiple pipe sizes the allowed length of 3/8" piping is 7.5ft, of ½" piping is 5ft, and ¾" piping is 2.5ft. ½" - For only one pipe size = 10ft For multiple pipe sizes the allowed length of ½" piping is 5ft, and ¾" piping is 2.5ft. ¾" - For only one pipe size = 5ft	
02	Value for HERS verification –The maximum measured distance in feet of pipe from a water heater to the any point of use.	
The responsible person's signature on this Certificate of Installation indicates the system identified on this Certificate has complied with all applicable requirements specified in this Table.		

G. (RDRmc-H) - HERS-Verified Demand Recirculation Manual Control	
01	Verify the controlled recirculation systems operate "on-demand", meaning that pump operation shall be initiated shortly prior to the hot water draw. The controls shall operate on the principal of shutting off the pump with a sensed rise in pipe
02	If more than one loop installed each loop shall have its own pump and controls
03	Verify that the pump, demand controls and thermo-sensor are present
04	Manual switches are located in the kitchen, all bathrooms, and any hot water use location that is at least 20 feet (measured along the hot water piping) from the water heater
05	Manual controlled systems may be activated by wired or wireless button mechanisms
06	Automatic Air release valve is installed on the inlet side of the recirculation pump per Section 110.3(c)5A.
07	A check valve is located between the recirculation pump and the water heater per Section 110.3(c)5B.
08	Hose bibb is installed between the pump and the water heating equipment with an isolation valve between the hose bibb and the water heating equipment per Section 110.3(c)5C.

For information and data collection only. Not valid until registered with a HERS provider

CERTIFICATE OF VERIFICATION		CF3R-PLB-20-H
Single Dwelling Unit Hot Water System Distribution		(Page 3 of 4)
Project Name:	Enforcement Agency:	Permit Number:
Dwelling Address:	City	Zip Code

09	Isolation valves are installed on both sides of the pump. One of the isolation valves may be the same isolation valve as in item 8 above per Section 110.3(c)5D.
10	The cold water supply piping and the recirculation loop piping is not connected to the hot water storage tank drain port per Section 110.3(c)5E.
11	A check valve is installed on the cold water supply line between the hot water system and the next closest tee on the cold water supply per Section 110.3(c)5F.
The responsible person's signature on this Certificate of Installation indicates the system identified on this Certificate has complied with all applicable requirements specified in this Table.	

H.(RDRsc-H) HERS-Verified Demand Recirculation Sensor Control<< Table H appears only if (RDRsc-H)- is selected in A2.>>	
01	Verify the controlled recirculation systems operate "on-demand", meaning that pump operation shall be initiated shortly prior to the hot water draw. The controls shall operate on the principal of shutting off the pump with a sensed rise in pipe
02	If more than one loop installed each loop shall have its own pump and controls
03	Verify that the pump, demand controls and thermo-sensor are present
04	Sensor controls are located in the kitchen, all bathrooms, and any hot water use location that is at least 20 feet (measured
05	Sensor controlled systems may be activated by wired or wireless button mechanisms
06	Automatic Air release valve is installed on the inlet side of the recirculation pump per Section 110.3(c)5A.
07	A check valve is located between the recirculation pump and the water heater per Section 110.3(c)5B.
08	Hose bibb is installed between the pump and the water heating equipment with an isolation valve between the hose bibb and the water heating equipment per Section 110.3(c)5C.
09	Isolation valves are installed on both sides of the pump. One of the isolation valves may be the same isolation valve as in item 8 above per Section 110.3(c)5D.
10	The cold water supply piping and the recirculation loop piping is not connected to the hot water storage tank drain port per Section 110.3(c)5E.
11	A check valve is installed on the cold water supply line between the hot water system and the next closest tee on the cold water supply per Section 110.3(c)5F.
The responsible person's signature on this Certificate of Installation indicates the system identified on this Certificate has complied with all applicable requirements specified in this Table.	

For information and data collection only. Not valid until registered with a HERS provider

CERTIFICATE OF VERIFICATION		CF3R-PLB-20-H
Single Dwelling Unit Hot Water System Distribution		(Page 4 of 4)
Project Name:	Enforcement Agency:	Permit Number:
Dwelling Address:	City	Zip Code

DOCUMENTATION AUTHOR'S DECLARATION STATEMENT

1. I certify that this Certificate of Verification documentation is accurate and complete.

Documentation Author Name:	Documentation Author Signature:
Company:	Date Signed:
Address:	CEA/HERS Certification Information (if applicable):
City/State/Zip:	Phone:

RESPONSIBLE PERSON'S DECLARATION STATEMENT

I certify the following under penalty of perjury, under the laws of the State of California:

1. The information provided on this Certificate of Verification is true and correct.
2. I am the certified HERS Rater who performed the verification identified and reported on this Certificate of Verification (responsible rater).
3. The installed features, materials, components, manufactured devices, or system performance diagnostic results that require HERS verification identified on this Certificate of Verification comply with the applicable requirements in Reference Appendices RA2, RA3, and the requirements specified on the Certificate of Compliance for the building approved by the enforcement agency.
4. The information reported on applicable sections of the Certificate(s) of Installation (CF2R) signed and submitted by the person(s) responsible for the construction or installation conforms to the requirements specified on the Certificate(s) of Compliance (CF1R) approved by the enforcement agency.
5. I will ensure that a registered copy of this Certificate of Verification shall be posted, or made available with the building permit(s) issued for the building, and made available to the enforcement agency for all applicable inspections. I understand that a registered copy of this Certificate of Verification is required to be included with the documentation the builder provides to the building owner at occupancy.

BUILDER OR INSTALLER INFORMATION AS SHOWN ON THE CERTIFICATE OF INSTALLATION

Company Name (Installing Subcontractor, General Contractor, or Builder/Owner):	
Responsible Builder or Installer Name:	CSLB License:

HERS PROVIDER DATA REGISTRY INFORMATION

Sample Group Number (if applicable):	Dwelling Test Status in Sample Group (if applicable)

HERS RATER INFORMATION

HERS Rater Company Name:	
Responsible Rater Name:	Responsible Rater Signature:
Responsible Rater Certification Number w/ this HERS Provider	Date Signed:

For information and data collection only. Not valid until registered with a HERS provider

CF2R-PLMB-20-H Instructions

TABLE E1 Compact Hot Water Distribution System-(CHWDS)	
Floor Area Served (ft2)	Maximum Measured Water Heater To Use Point Distance (ft)
< 1000	28’
1001 – 1600	43’
1601 – 2200	53’
2201 – 2800	62’
>2800	68’

TABLE F1 HERS-Verified Point of Use (POU-H)	
Size Nominal, Inch	Maximum Measured Water Heater To Use Point Distance Length of Pipe (feet)
3/8”	15
1/2”	10
3/4”	5

For information and data collection only. Not valid until registered with a HERS provider

A. DHW DISTRIBUTION SYSTEM

1. Water Heating System Name: From CF-2R-PLB-20-H
2. Dwelling Unit Distribute type: Based on the system being installed, pick from one of the following - HERS-Verified Pipe Insulation Credit (PIC-H), HERS-Verified Parallel Piping (PP-H), HERS-Verified Compact Hot Water Distribution System (CHWDS-H), HERS-Verified Point of Use (POU-H), HERS-Verified Demand Recirculation Manual Control (RDRmc-H), or HERS-Verified Demand Recirculation Sensor Control (RDRsc-H).

B. MANDATORY MEASURES FOR ALL DOMESTIC HOT WATER DISTRIBUTION SYSTEMS

Ensure all mandatory requirements are met.

C. (PIC-H) HERS-Verified Pipe Insulation Credit

Inspection to verify that all hot water piping in non-recirculating systems is insulated and that corners and tees are fully insulated. No piping should be visible due to insulation voids with the exception of the last segment of piping that penetrate walls and delivers hot water to the sink, appliance, etc. Refer to RA3.6.3.

D. (PP-H)-HERS-Verified Parallel Piping

Inspection that requires that the measured length of piping between the water heater and single central manifold does not exceed five feet. Refer to RA3.6.4.

E. (CHWDS-H) HERS-Verified Compact Hot Water Distribution System

Field verification to insure that the longest pipe run from any use point to the water heater serving that use point does not exceed a maximum length in Table E1 above. Refer to RA3.6.5.

F. (POU-H)-HERS-Verified Point of Use

Inspection that all hot water fixtures in the dwelling unit, with the exception of the clothes washer, must be located within certain distance from a water heater based on pipe diameter. To meet this requirement, most houses will require multiple water heaters. Ensure the maximum pipe length does not exceed the length specified in Table F1 above. Refer to RA3.6.6.

G. (RDRmc-H) - HERS-Verified Demand Recirculation Manual Control

Inspection to verify that all recirculating hot water piping is insulated and that corners and tees are fully insulated. No piping should be visible due to insulation voids. Refer to RA3.6.7.

H.(RDRsc-H) HERS-Verified Demand Recirculation Sensor Control

Inspection to verify that all recirculating hot water piping is insulated and that corners and tees are fully insulated. No piping should be visible due to insulation voids. Refer to RA3.6.8.

For information and data collection only. Not valid until registered with a HERS provider

MULTIFAMILY CENTRAL HOT WATER SYSTEM DISTRIBUTION

CERTIFICATE OF VERIFICATION		CF3R-PLB-21-H
Multifamily Central Hot Water System Distribution		(Page 1 of 2)
Project Name:	Enforcement Agency:	Permit Number:
Dwelling Address:	City	Zip Code

A. SYSTEM TYPE	
01	HERS-Verified Multiple Recirculation Loops for DHW Systems Serving Multiple Dwelling Units

B. HERS VERIFICATION REQUIREMENTS FOR ALL CENTRAL DOMESTIC HOT WATER RECIRCULATION SYSTEMS	
01	Outlet temperature controls: On systems that have a total capacity greater than 167,000 Btu/hr, outlets that require higher than service water temperatures as listed in the ASHRAE Handbook shall have separate remote heaters, heat exchangers, or boosters to supply the outlet with the higher temperature. (Section 110.3 (c)1)
02	Controls for hot water distribution systems: Service hot water systems with circulating pumps or with electrical heat trace systems shall be capable of automatically turning off the system. (Section 110.3(c)2).
03	Unfired Storage Tanks are insulated with an external R-12 or combination of R-16 internal and external Insulation. (Section 110.3(c)4).
04	Automatic Air release valve is installed on the inlet side of the recirculation pump per Section 110.3(c)5A.
05	A check valve is located between the recirculation pump and the water heater per Section 110.3(c)5B.
06	Hose bibb is installed between the pump and the water heating equipment with an isolation valve between the hose bibb and the water heating equipment per Section 110.3(c)5C.
07	Isolation valves are installed on both sides of the pump. One of the isolation valves may be the same isolation valve as in item 6 above per Section 110.3(c)5D.
08	The cold water supply piping and the recirculation loop piping is not connected to the hot water storage tank drain port per Section 110.3(c)5E.
09	A check valve is installed on the cold water supply line between the hot water system and the next closest tee on the cold water supply per Section 110.3(c)5F.
10	System must have a dedicated return line which is insulated. (Section 120.3)
11	All hot water pipes are insulated per the insulation requirements of Table 120.3A(Section 120.3)(1" insulation for 1" and smaller pipes. 1.5" insulation for 1 to 1.5 inch pipes)
12	Where insulation is installed there is no piping visible due to insulation voids
13	All elbows and tees fully insulated
The responsible person's signature on this Certificate of Installation indicates the system identified on this Certificate has complied with all applicable requirements specified in this Table.	

C. HERS-VERIFIED MULTIPLE RECIRCULATION LOOPS FOR DHW SYSTEMS SERVING MULTIPLE DWELLING UNITS	
01	All buildings with 8 or more dwelling units have a **minimum** 2 recirculation loops.
02	Each loop roughly serves the same number of dwellings.
03	Each loop will have its own pump and controls
The responsible person's signature on this Certificate of Installation indicates the system identified on this Certificate has complied with all applicable requirements specified in this Table.	

For information and data collection only. Not valid until registered with a HERS provider

CERTIFICATE OF VERIFICATION		CF3R-PLB-21-H
Multifamily Central Hot Water System Distribution		(Page 2 of 2)
Project Name:	Enforcement Agency:	Permit Number:
Dwelling Address:	City	Zip Code

DOCUMENTATION AUTHOR'S DECLARATION STATEMENT

1. I certify that this Certificate of Verification documentation is accurate and complete.

Documentation Author Name:	Documentation Author Signature:
Company:	Date Signed:
Address:	CEA/HERS Certification Information (if applicable):
City/State/Zip:	Phone:

RESPONSIBLE PERSON'S DECLARATION STATEMENT

I certify the following under penalty of perjury, under the laws of the State of California:

1. The information provided on this Certificate of Verification is true and correct.
2. I am the certified HERS Rater who performed the verification identified and reported on this Certificate of Verification (responsible rater).
3. The installed features, materials, components, manufactured devices, or system performance diagnostic results that require HERS verification identified on this Certificate of Verification comply with the applicable requirements in Reference Appendices RA2, RA3, and the requirements specified on the Certificate of Compliance for the building approved by the enforcement agency.
4. The information reported on applicable sections of the Certificate(s) of Installation (CF2R) signed and submitted by the person(s) responsible for the construction or installation conforms to the requirements specified on the Certificate(s) of Compliance (CF1R) approved by the enforcement agency.
5. I will ensure that a registered copy of this Certificate of Verification shall be posted, or made available with the building permit(s) issued for the building, and made available to the enforcement agency for all applicable inspections. I understand that a registered copy of this Certificate of Verification is required to be included with the documentation the builder provides to the building owner at occupancy.

BUILDER OR INSTALLER INFORMATION AS SHOWN ON THE CERTIFICATE OF INSTALLATION

Company Name (Installing Subcontractor, General Contractor, or Builder/Owner):	
Responsible Builder or Installer Name:	CSLB License:

HERS PROVIDER DATA REGISTRY INFORMATION

Sample Group Number (if applicable):	Dwelling Test Status in Sample Group (if applicable)

HERS RATER INFORMATION

HERS Rater Company Name:	
Responsible Rater Name:	Responsible Rater Signature:
Responsible Rater Certification Number w/ this HERS Provider	Date Signed:

For information and data collection only. Not valid until registered with a HERS provider

A. SYSTEM TYPE

This form is used for HERS verification credit for Multiple Recirculation Loop Designs for DHW Systems Serving Multiple Dwelling Units defined in RA3.6.9.

B. MANDATORY MEASURES FOR ALL DOMESTIC HOT WATER DISTRIBUTION SYSTEMS

Ensure all mandatory requirements are met.

C. HERS-VERIFIED MULTIPLE RECIRCULATION LOOPS FOR DHW SYSTEMS SERVING MULTIPLE DWELLING UNITS

This measure requires on site HERS verification that at least two central recirculation loops are included in the system design. This credit is available to buildings with 8 or more units. The recirculation loops must be relatively equal in length and supply approximately the same number of dwelling units.

For information and data collection only. Not valid until registered with a HERS provider