Energy Research and Development Division
FINAL PROJECT REPORT

HIGH-PERFORMANCE PHOTOVOLTAICS CARPORTS: DESIGN THROUGH DEPLOYMENT

Prepared for: California Energy Commission
Prepared by: SunPower Corporation

DECEMBER 2007
CEC-500-2013-090

PREPARED BY:

Primary Author(s):
Katie Brown

SunPower Corporation
1414 Harbour Way South
Richmond, CA 94804

Contract Number: 500-06-041

Prepared for:

California Energy Commission

Hassan Mohammed
Contract Manager

Linda Spiegel
Office Manager
Energy Generation Research Office

Laurie ten Hope
Deputy Director
ENERGY RESEARCH AND DEVELOPMENT DIVISION

Robert P. Oglesby
Executive Director

DISCLAIMER

This report was prepared as the result of work sponsored by the California Energy Commission. It does not necessarily represent the views of the Energy Commission, its employees or the State of California. The Energy Commission, the State of California, its employees, contractors and subcontractors make no warranty, express or implied, and assume no legal liability for the information in this report; nor does any party represent that the uses of this information will not infringe upon privately owned rights. This report has not been approved or disapproved by the California Energy Commission nor has the California Energy Commission passed upon the accuracy or adequacy of the information in this report.

ACKNOWLEDGMENTS

SunPower Corporation is grateful for the support provided by the Sacramento Municipal Utility District through the California Energy Commission's Public Interest Energy Research (PIER) Program for this product development effort. Through the generous funding and insightful guidance by the Energy Commission, SunPower has advanced its objective of providing clean energy to California's citizens, boosting California's economy, and improving the quality of California's environment.

PREFACE

The California Energy Commission Energy Research and Development Division supports public interest energy research and development that will help improve the quality of life in California by bringing environmentally safe, affordable, and reliable energy services and products to the marketplace.

The Energy Research and Development Division conducts public interest research, development, and demonstration (RD&D) projects to benefit California.

The Energy Research and Development Division strives to conduct the most promising public interest energy research by partnering with RD&D entities, including individuals, businesses, utilities, and public or private research institutions.

Energy Research and Development Division funding efforts are focused on the following RD&D program areas:

- Buildings End-Use Energy Efficiency
- Energy Innovations Small Grants
- Energy-Related Environmental Research
- Energy Systems Integration
- Environmentally Preferred Advanced Generation
- Industrial/Agricultural/Water End-Use Energy Efficiency
- Renewable Energy Technologies
- Transportation

High-Performance PV Carports: Design through Deployment is the final report for the SMUD ReGen Project (Contract No. 500-00-034) conducted by SunPower Corporation. The information from this project contributes to Energy Research and Development Division's Energy Research and Development program.

For more information about the Energy Research and Development Division, please visit the Energy Commission's website at www.energy.ca.gov/research/ or contact the Energy Commission at 916-327-1551.

ABSTRACT

The Sacramento Municipal Utility District issued a solicitation for the development of a photovoltaic carport in July 2005. PowerLight initiated the development of a high-performance, aesthetically attractive photovoltaic carport featuring bifacial modules. SunPower Corporation continued work on the development and deployment of the carport following its acquisition of PowerLight. The carport integrated bifacial module technology with reflective, tensile cloth, resulting in a distinctive architectural structure with enhanced energy production. Two demonstration projects took place and initial monitoring showed promising energy production. Long-term monitoring and cost reduction activities will continue following the completion of this contract. The new photovoltaic carport technology provided additional renewable options for California energy consumers and enabled facility owners to greatly improve parking area utilization.

Keywords: Solar, photovoltaic, PV cells, PV panels, bifacial PV modules, carport PV systems, electricity production, distributed generation

Please cite this report as follows:

Brown, Katie. 2007. *High-Performance PV Carports: Design Through Deployment*. California Energy Commission. Publication number: CEC-500-2013-090.

TABLE OF CONTENTS

Acknowledgments ..... **i**

ABSTRACT ..... **iii**

TABLE OF CONTENTS ..... **iv**

LIST OF FIGURES ..... **iv**

LIST OF TABLES ..... **v**

EXECUTIVE SUMMARY **1**

Introduction 1

Project Purpose 1

Project Results 1

Project Benefits 2

CHAPTER 1: Introduction **3**

1.1 Background and Overview 3

1.2 Project Objectives 4

CHAPTER 2: Project Approach **5**

CHAPTER 3: Project Outcomes **9**

CHAPTER 4: Conclusions and Recommendations **35**

GLOSSARY **37**

LIST OF FIGURES

Figure 1: Rendering of SunPower bifacial PV carport 3
Figure 2: Fixed tilt structures mounted with bifacial modules; reflected material was laid beneath one structure. 7
Figure 3: Alternate structural steel configurations 13
Figure 4: Double-cantilever PV carport design, featuring reflective shade cloth 13
Figure 5: Schematic of unit philosophy for PV system design 14
Figure 6. Module physical and electrical properties 15
Figure 7: Drawing illustrating DC wiring design concept 16
Figure 8: Drawing of structural steel design concept 17
Figure 9: Sketches of preliminary tensile fabric designs 17
Figure 10: Typical integrated wiring details 18
Figure 11: Steel design—elevation view 19
Figure 12: Steel design details 20

Figure 13: Slab foundation and integrated crash protection—section view 21
Figure 14: Fabric Design—plan view 21
Figure 15: Fabric Design—elevation view 22
Figure 16: Fabric Design—connection details 22
Figure 17: Design Development Model: Double-cantilever PV carport design, featuring bifacial modules 23
Figure 18: Double-cantilever PV carport design, without shade cloth. Physical model showing dappled shadow pattern created under bifacial modules. 23
Figure 19: Power and energy production data comparing impact of reflective fabric on bifacial module performance 24
Figure 20: Photograph of SunPower fixed PV carports at LVSP 25
Figure 21: Demonstration site photo showing wire trays, 4x4 tubes, and module attachment hardware 26
Figure 22: Demonstration site photo with DC (red) and AC (yellow) wiring overlay 26
Figure 23: Architectural rendering of SunPower PV carport at Carmichael Water District 27
Figure 24: Carmichael Water District PV carport system, pre-installation of tensile fabric 28
Figure 25: (left) Completed Carmichael Water District PV carport system, post-installation of tensile fabric; (right) detail of tensile fabric attachment. 28
Figure 26: Predicted annual energy production and solar resource based on TMY2 data 31
Figure 27: Energy production and irradiance on December 22, 2007 32
Figure 28: Energy production and irradiance on December 21, 2007 32
Figure 29: Comparison of actual energy production vs. predicted from 12/21/07 to 1/21/08 33

LIST OF TABLES

Table 1. Project task assignments 5
Table 2. Current PV carport industry strategies 9
Table 3. Summary of PV module data 13

EXECUTIVE SUMMARY

Introduction

The Sacramento Municipal Utility District (SMUD) issued a solicitation for the development of a photovoltaic (PV) carport in July 2005. SunPower Corporation (previously PowerLight – all future references will use the SunPower name) proposed the development of a carport featuring bifacial modules and initiated this development based on their experience in carport design and installation.

Project Purpose

The goal of this project was to develop an aesthetically attractive, lightweight PV carport that could be rapidly deployed on a variety of parking lot types. SunPower's design utilized next generation high-efficiency modules, allowed optimization of Ground Coverage Ratio, and enabled integration of an optional tensile fabric shade cloth.

Project Results

SunPower brought the improved carport design to the field by implementing two demonstration projects. SunPower designed and installed a 254-kilowatt-peak (kWp) SunPower fixed-tilt PV Carport System at Las Vegas Springs Preserve for the Las Vegas Valley Water District. SunPower also designed and installed a 17.8-kWp SunPower PV Carport System at the Carmichael Water District in California.

In the first month of operation, the Carmichael Water District system performed well relative to SunPower's energy prediction models. Preliminary results showed the system performing 23 percent better relative to a system using conventional modules. The Carmichael Water District system will be monitored for energy production in the coming months. The project team will provide an update following the first six months of production to provide a broader dataset across a greater variety of weather conditions and irradiance. Additional monitoring is essential to better understand bifacial module performance.

The bifacial performance testing carried out under this project validated performance gain predictions for bifacial modules coupled with a reflective material. SunPower observed a maximum of 17 percent gain in energy production during the one-month evaluation period.

The demonstration projects validated the product concept and design intent, and also provided invaluable insight into potential areas of improvement for future design iterations. The authors concluded that the new carport design was an excellent product for many applications. This product also enabled facility owners to greatly improve utilization of parking areas.

Cost reduction will remain a high priority for all types of PV systems until they can compete with other forms of electricity production without buydown programs. All aspects of PV carport systems must be examined on a periodic basis for ways to reduce the cost of materials, labor, and overhead. Lessons learned from these demonstration projects have provided several potential paths to significant cost reduction.

Project Benefits

This project benefitted California by providing a high-value PV product for commercial applications. In addition, the high-performance, aesthetically appealing carport provided high visibility for solar energy production.

Chapter 1: Introduction

1.1 Background and Overview

Figure 1: Rendering of SunPower bifacial PV carport

Photo Credit: SunPower

This report outlines the development of an aesthetically attractive, lightweight photovoltaic (PV) carport that could be rapidly deployed on a variety of parking lot types and orientations by SunPower Corporation.

Throughout its history, SunPower has developed unparalleled experience in California's commercial PV markets. This experience includes the design and construction of several megawatts (MW) of PV shade structures. However, these shade structures have typically been developed on a case-by-case basis.

In July 2005, the Sacramento Municipal Utility District (SMUD) issued a solicitation for the development of a PV carport. Based on SunPower's experience in carport design and installation, the company proposed the development of a carport featuring bifacial modules and initiated this development.

Following a typical product development cycle, the research team developed the SunPower high-efficiency PV carport through performance of the following tasks:

- Preliminary Design
- Final Design
- Testing
- Implementation
- Monitoring and Evaluation

The successful execution of these tasks achieved the objective of developing a modular PV carport product.

1.2 Project Objectives

Relationship to PIER Goals

This Agreement meets the Public Interest Energy Research (PIER) goal of developing renewable energy technologies, products, and services that provide electricity customers with more affordable electricity, improved reliability, and a selection of choices. This project also meets the secondary PIER goal of providing greater choices for California consumers by improving available solar technologies and making them more cost effective.

Project Goals

The goal of this project is to develop and deploy a low-cost, aesthetically attractive, high-performance PV carport that can be rapidly deployed on a variety of parking lot types and orientations.

Chapter 2:
Project Approach

This project consists of the following five tasks geared toward the development of a next-generation PV carport design (as demonstrated in Table 1).

Table 1. Project task assignments

Task	Description
Task 5.1.1	Preliminary Design
Task 5.1.2	Final Design
Task 5.1.3	Testing
Task 5.1.4	Implementation
Task 5.1.5	Monitoring & Evaluation
Task 5.1.6	Administration

*The approach to each technical task (Tasks 5.1.1-5.1.5) is described in the sections that follow.

Task 5.1.1—Preliminary Design

Under this task, SunPower defined the design parameters for PV carports, given available technologies, shading requirements, and economic factors. In developing the preliminary PV carport design, SunPower considered the following factors: cost reduction opportunities, aesthetics, and performance.

Cost Reduction

As a result of the startup research and previous experience, the authors quickly concluded that the most effective methods for achieving cost reduction are:

- Increased standardization and prefabrication of structural supports.
- Spreading out and/or tilting individual PV modules toward the south to enable the use of fewer, more efficient modules.

Aesthetics

Aesthetic criteria vary from site to site. However, the research team identified several fundamental criteria for ensuring that any permutation of the basic carport design would have a universally pleasing look and feel. The basic carport design consisted of:

- Visual continuity of structural steel and PV module tilt angles and mounting method.
- Clean and integrated wiring, conduit, and tray mounting assemblies.

- Integrated crash protection or visually compatible bollard or island design.
- Integrated lighting and optional security camera mounting.
- Optional tensile fabric configurations that complement the PV arrangement and other design elements.

Performance

In addition, the authors developed the following criteria for improving system performance:

- Highest possible module efficiency and optimized string lengths.
- Combiner box and inverter design, placement, and mounting.
- Simplicity and rapidity of installation and reduction of field labor.

Working Method and Focus

The project team initiated work on the carport design in light of the above criteria, and these principles continue to define the approach. Members of SunPower's supply chain, product development, engineering, and sales groups collaborated to meet the goals of this task. The bulk of the work in this task focused on two areas:

- Evaluating existing shade structure designs and module options.
- Finalizing the design direction for the PV Carport product in collaboration with subcontractors: A structural subcontractor for the steel design (Material Integrity Solutions), and one for the tensile fabric design (Huntington Design Associates).

Results for all activities are described in the Chapter 3:
Project Outcomes section of this report.

Task 5.1.2—Final Design

Using the preliminary design as the foundation, SunPower worked to optimize the carport design. SunPower's design utilizes next generation high-efficiency modules and allows optimization of Ground Coverage Ratio (GCR), as well as enabling integration of an optional tensile fabric shade cloth.

Work on the final design continued to focus on the cost, aesthetic, and performance criteria, as identified in Task 5.1.1 Preliminary Design.

Task 5.1.3—Testing

The primary goal of this task was to build and test a prototype system for the PV carport. The cornerstone of the PV Carport System design concept is high performance. Building on potential benefits offered by bifacial modules, SunPower integrated a reflective tensile fabric into the carport structure. This reflective fabric increases the amount of light incident on the backside of the module. In order to quantify energy production gains, SunPower set up an

outdoor test facility in San Jose, California, to monitor side-by-side strings of eight bifacial modules. The results are discussed in the sections that follow.

Aesthetics Evaluation

In order to evaluate the design for aesthetics, SunPower opted to build scale models of the carport design. Although it is a qualitative approach, the scale model validates the design without building full-scale prototypes. Results are described in the Chapter 3: Project Outcomes section of this report.

Performance Testing

With limited field data available for bifacial modules, SunPower developed a test bed for side-by-side performance testing of bifacial modules with and without a reflective shade cloth beneath. This test arrangement enabled SunPower to quantify the performance gains of the bifacial module when coupled with the reflective material.

Figure 2: Fixed tilt structures mounted with bifacial modules; reflected material was laid beneath one structure.

Photo Credit: SunPower

Due to the costs associated with replicating the carport structure and tensile fabric, two fixed-tilt, ground-mounted arrays were used for the side-by-side comparison. While not replicating the demonstration systems, this approach provided sufficient data to determine the relative performance gain. Optimization of the tilt angle and fabric placement was not considered due to the available time for the testing.

Each array is made up of eight bifacial modules, and the string is then connected to a single inverter. Every minute, the data acquisition system logged direct current (DC) voltage and current. The authors used this data to calculate instantaneous power and cumulative energy production. Due to time constraints, only one month of test data is available for this evaluation. Results are described in the Project Outcomes section of this report.

Task 5.1.4—Implementation

SunPower brought the improved carport design to the field through the implementation of two demonstration projects. For the first implementation of this carport system, SunPower designed and installed a 254-kilowatt-peak (kWp) SunPower fixed-tilt PV Carport System at Las Vegas Springs Preserve for the Las Vegas Valley Water District. For the second demonstration project, SunPower designed and installed a 17.8-kWp SunPower PV Carport System at Carmichael Water District.

Both demonstration projects are the result of SunPower design, aimed at developing an aesthetically attractive, high-performance PV carport that can be rapidly deployed on a variety of parking lot types and orientations. SunPower's design utilizes next-generation high-efficiency bifacial modules, allows optimization of GCR, and enables integration of a tensile fabric shade cloth. While this first installation of the PV carport system did not include the tensile, reflective fabric, the primary design features for the carport system were fielded at this demonstration site. The Carmichael demonstration project incorporates the tensile fabric.

Ideal for parking lots or open areas adjacent to facilities, SunPower's solar electric carport systems generate on-site electric power, reduce energy costs, and provide premium shading and protection from the weather. The solar carport features a complete covered space with integrated bifacial solar modules to generate maximum electrical power. The system is fully engineered and architecturally designed.

Task 5.1.5—Monitoring & Evaluation

The goal of this task was to monitor the PV carport for performance of the 17.8-kWp SunPower PV Carport System at Carmichael Water District. SunPower commissioned the system on December 20, 2007. The project team collected energy production data during the month following commissioning for the initial system monitoring. Results of this effort are presented in the Chapter 3:
Project Outcomes section of this report.

Chapter 3:
Project Outcomes

Task 5.1.1—Preliminary Design

Case Study Results

The five case studies outlined below in Table 2 are examples of some of the more interesting PV carport strategies currently being deployed in the industry. They illustrate many of the drawbacks and advantages the authors attempted to address in the preliminary design effort. For each system, the table includes a brief discussion stemming from review of each system's approach, which focused on the following areas:

1. Structural support design and array tilt strategy.
2. Practical issues such as encroachment on usable parking area and total system height.
3. Aesthetic value or creative use of structure and/or modules.
4. Module output efficiency and efficient use of space (module layout).
5. Modularity and scalability of the design, level of customization.
6. Integration of the wiring and electrical design with the structural supports.

Table 2. Current PV carport industry strategies

Location	Description
Patagonia—Huntington Beach, California 	Specifications: (Sharp-2006) 66.6 kWp Capacity Sharp 185 watt modules Discussion: -Custom, site-specific design is architecturally effective -Use of multiple column arrangement for aesthetic effect and to allow greater system height -Panel layout is spatially inefficient and columns eat into usable parking area

SunPower Fixed Tilt Parking System 	Specifications: Product capacity and module varies Discussion: -Standard center post, cantilevered design is clean and scalable but visually uninteresting -Minimal intrusion on usable parking area (24-inch diameter column footings) -Panels are flat, limiting output
Kyocera Solar Grove—San Diego, California 	Specifications: 235 kWp Capacity 1400 Kyocera KC-187G modules 200 Custom light-filtering modules (Kyocera-2005) Discussion: -Solar tree design is similar to double cantilever, but breaks structure into pieces -Use of light-filtering modules increases visual interest
SCHOTT Solar Carport system 	Specifications: Product-capacity varies (Schott modules) Discussion: -double bent column design has minimal footprint and clean look -modules are tilted south for increased output. Break at center helps minimize height of system -Lack of column crash protection necessitates tire stops
Thin-film on standing seam metal roof 	Specifications: 54 kWp Capacity (SunPower) Flexible, triple-junction, thin-film Discussion: -post and beam construction creates obstacle to parking space entry -PV is unreliable and inefficient -Structure protects from weather in addition to providing shade

The carport projects and products outlined above represent a cross-section of the design strategies currently being deployed in the PV carport market. The number of installed domestic PV carports is still relatively small, and the carports are concentrated largely in California and other western states. Consequently, most of the carports the project team reviewed are pilot systems, demonstration systems, smaller systems, site-specific designs, or unique in some other way. None of the installed carport designs are ready to be deployed on a mass scale, yet each design has merits that could be incorporated into a standard PV carport product.

Results of Manufacturer Investigation

SunPower has spent considerable time evaluating available PV modules and technologies for use in its carport systems. Modules employed in this configuration must possess specific characteristics in order for these systems to add value. The three most important factors are cost, efficiency, and size. Other factors that also add value include the use of proven technology, strong company backing, and strategic value to the PV supplier. Often, carport systems are high profile installations under the scrutiny of the public eye. SunPower can offer good marketing position to its key suppliers by featuring their modules in such configurations. In return, SunPower can secure good pricing, which it passes on as a reduction in total system cost. Taking into account all these factors, SunPower chose to focus on four specific modules for use in its carport systems. The decision to source several different modules provides a diverse supply of PV and allows the company to design carports to each customer's specific needs in relation to cost, size, and aesthetic qualities. The following is a description of each module and a discussion of how each module adds value to PV carports relative to other PV modules.

Evergreen, ES-190-RL, 190 watt-peak (Wp)

The PV modules produced by Evergreen Solar are unique because they incorporate proprietary crystalline silicon technology known as *string ribbon*. String ribbon is a process where the cells are drawn from a molten crucible of silicon in a continuous process. These ribbons are then cut into smaller cells and processed into modules. Evergreen has made great strides in improving the efficiency and reducing the cost of string ribbon technology making it strong performing and low-cost PV offering.

SunPower chose to employ Evergreen's latest product offering, the Spruce class. The ES-190-RL is a 190 Wp module with an efficiency of 12.7 percent. This efficiency is comparable to high-grade poly-crystalline cells, at a lower cost. The balance of module construction is based on industry-standard Glass-EVA-Tedlar with proven reliability. SunPower has recently entered into a long-term supply agreement with Evergreen to supply these modules. In a PV-constrained market, availability of these modules for carport systems ensures SunPower can satisfy increasing market demand for PV carports with a module that combines proven technology and state of the art manufacturing techniques.

Sharp, ND-6KE1DA, 208 Wp

Sharp is the No. 1 manufacturer of solar cells worldwide with nearly as much generating capacity as the next three largest manufacturers combined. The Sharp 208 Wp module

represents Sharp's largest and highest power module format. It uses 6-inch poly-crystalline cells that comprise the largest portion of Sharp's overall cell capacity. Although these are not Sharp's highest efficiency cells, they are reliable cells with the most stable output. SunPower partnered with Sharp to combine their proven technology with its successful implementation of the world's largest PV project installed to date. Furthermore, Sharp's costs are among the lowest in the industry for high quality poly-crystalline modules.

SunPower, SPR-220, 220 Wp

SunPower modules represent the highest efficiency modules on the market. They also feature superior aesthetic qualities by employing their unique back-contact cell interconnection. Their clean appearance and high efficiency made them a natural fit for high profile carport installations.

The vertical integration of SunPower and PowerLight ensures a steady supply of high efficiency product for use in carport systems at costs that are competitive with lower efficiency "conventional" technology.

Sanyo, HIP-186DA1, 186 Wp (Bifacial)

Sanyo, in close collaboration with SunPower, has released a unique bifacial module. A bifacial module is able to collect the light incident on both the front and the back surfaces and convert it to electricity. Sanyo modules rank with SunPower's, as the highest efficiency modules on the market. Their efficiency comes from the use of the amorphous and mono-crystalline hybrid cell coined as a Hetero-junction with Intrinsic Thin Layer (HIT) cell. The HIT cell is capable of cell efficiencies of more than 20 percent and module efficiencies approaching 16 percent. It also offers the additional benefit of being able to capture light effectively from both sides. Modules made with a clear substrate on the back have "bifacial" characteristics.

The bifacial nature of these modules offers multiple advantages for carport designs over conventional PV types. First, elevated modules tend to have more light incident on the back side of the modules. By capturing this ambient light the overall module efficiency can exceed 20 percent in a carport system. Also, the clear module allows for unique aesthetic qualities.

Table 3 shows the key data for each of the four modules initially planned for use in PV carports. The table demonstrates that SunPower traditionally used a wide range of available and proven cell technology, large size formats, high efficiencies, and strong manufacturing backing with respect to performance warranties.

Table 3. Summary of PV module data

MODULE INFO		POWER		AREA	CELL				WARRANTY	
MFG	MFG P/N	Pmp (STC)	Module Efficiency (%)	Area ft^2 (m^2)	Cell Type	Cell Size (mm)	# of Cells	Cell Layout	Power Output (years)	Workmanship (years)
Evergreen	ES-190-RL	190	12.7	16.08 (1.4931)	Ribbon Si	150.5 x 81	108	6 x 18	90%/10 - 80%/25	2
Sanyo	HIP-186DA1 BIFACIAL	186	15.8	13.07 (1.2150)	Cz-Si / a-Si	100 x 100	96	8 x 12	90%/10 - 80%/25	2
Sharp / PL	ND-6KE1DA	208	12.8	17.55 (1.6302)	Poly-Si	150 x 150	60	6 x 10	90%/10 - 80%/25	1
Sunpower	SPR-220-WHT-U	220	17.7	13.39 (1.244)	Cz-Si	125 x 125	72	6 x 12	95%/6 - 90%/12 - 80%/25	10

Data collected by Katie Brown (insert contract dates)

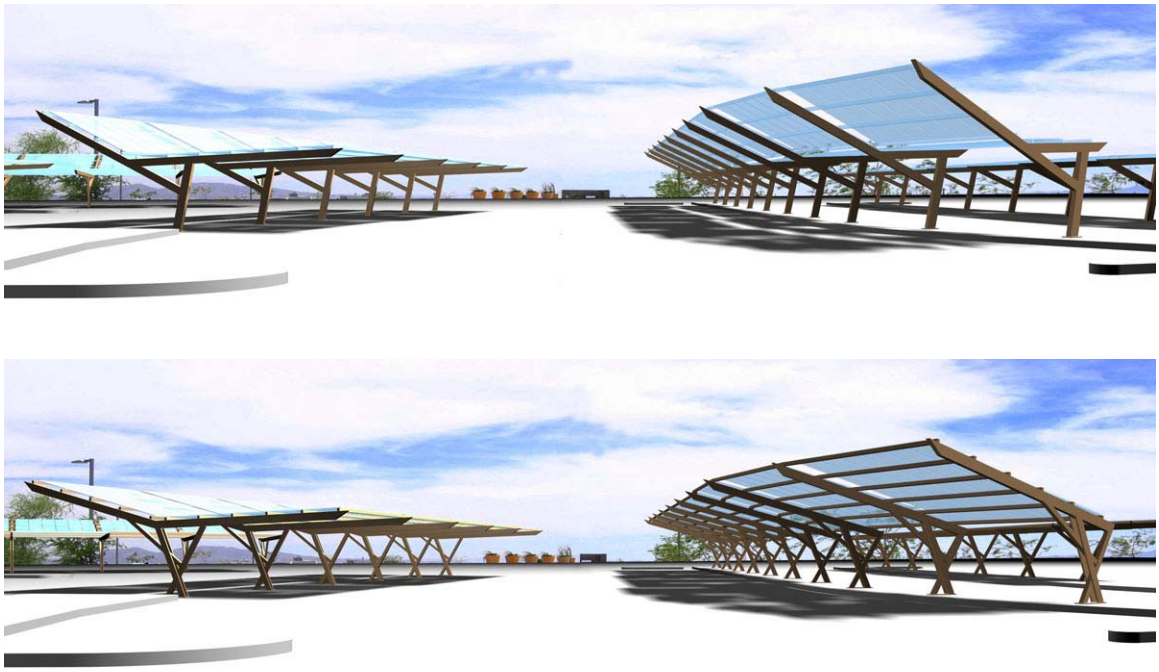

Figure 3: Alternate structural steel configurations

Photo Credit: SunPower

Figure 4: Double-cantilever PV carport design, featuring reflective shade cloth

Photo Credit: SunPower

Unit Philosophy

The carport can be broken down into "units." Each unit is a standard, repeatable block with optimized structural layout, foundation design, wire routing, and PV mounting. The units are sized to maximize inverter capacity when they are assembled in series. Each unit has a regular structural bay, so that structural components may be prefabricated and ordered in large quantities. In addition, these components are interchangeable between most unit types.

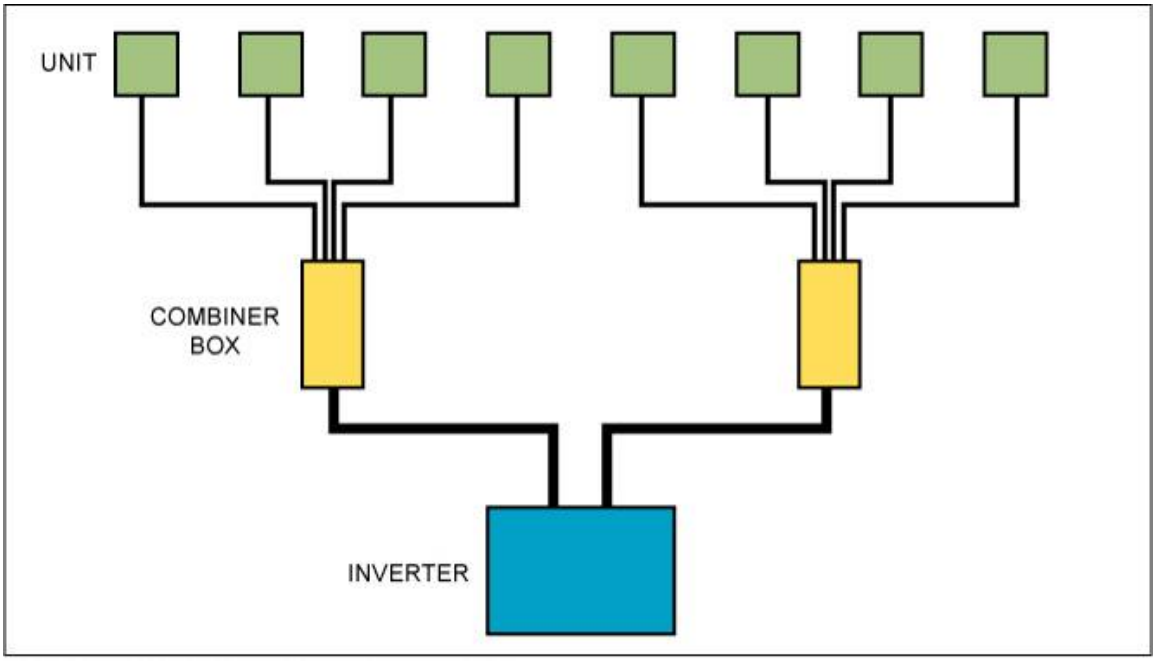

Figure 5: Schematic of unit philosophy for PV system design

Photo Credit: SunPower

SunPower Unit Designs

The research team designed five unit types, based on the properties of the four modules described in Section 2 of this report. The project team optimized each unit using each module's peak power output, source circuit (string) length, physical dimensions, and other factors. When these units are aggregated to form canopy structures, they fill SunPower's combiner boxes and chosen inverters at a very high capacity, making the most of high-cost electrical equipment. Figure 6 below describes the physical and electrical properties of the units.

POWERLIGHT PV CARPORT
UNIT DESIGNS FOR 4
MODULE TYPES

	Unit	Units per		Units per		kWh/kWp			Unit kWp	annual Unit output (kWh)		
	Strings per Unit	small box	large box	100kVA	225kVA	t0	t8	t15		t0	t8	t15
Evergreen 180W												
1.0 GCR	8	4	6	**6**	**12**							
% eff		58.3%	87.5%	89.4%	***92.7%***	1230	1299		21.6	26568	28058	
Sharp 208W												
1.0 GCR	7	5	6	**5**	**12**							
% eff		97.2%	75.0%	84.7%	***90.4%***	1248	1318		24.96	31150	32897	
SPR-220W												
1.0 GCR	8	3	6	**6**	**13**							
% eff		66.7%	85.7%	***93.6%***	***90.1%***	1231	1305		19.36	23832	25265	
Sanyo HIT-186W												
1.0 GCR	8	4	5	**9**	**20**							
% eff		88.9%	71.4%	***95.6%***	***94.4%***		1333		11.904		17830	
0.7 GCR	7	5	7	**10**	**22**							
% eff		97.2%	87.5%	***93.0%***	***90.9%***			1305	10.416			15273.7

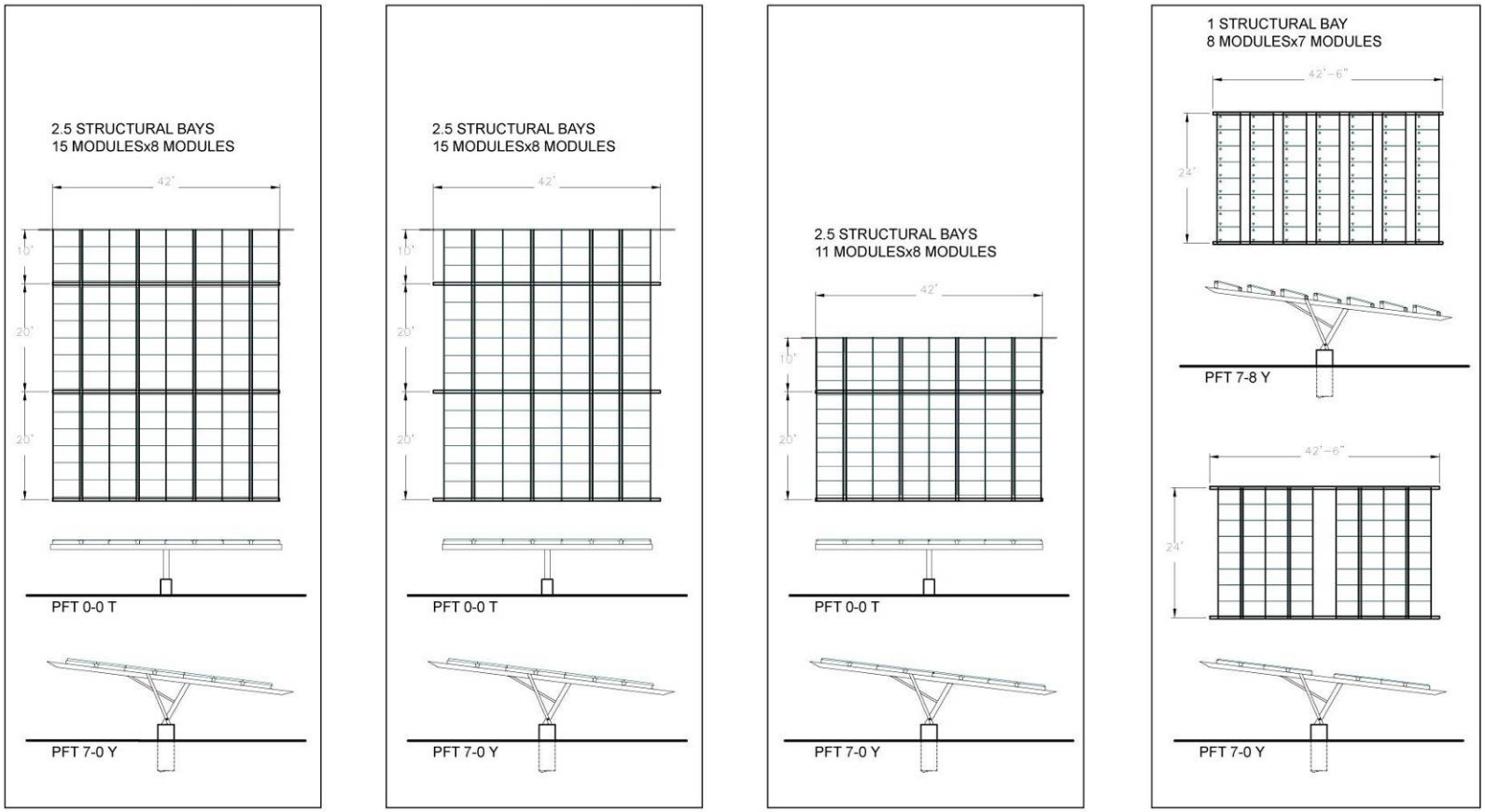

EVERGREEN 180W UNIT

SHARP 208W UNIT

SUNPOWER 220W UNIT

SANYO HIT 186W UNIT

Figure 6. Module physical and electrical properties

Photo Credit: SunPower

Wire Routing Combined With Structure

The following drawing (Figure 7) shows the proposed method for combining wire routing with structural members on four of the five unit types, leading to a much cleaner system and potentially reducing material and labor costs.

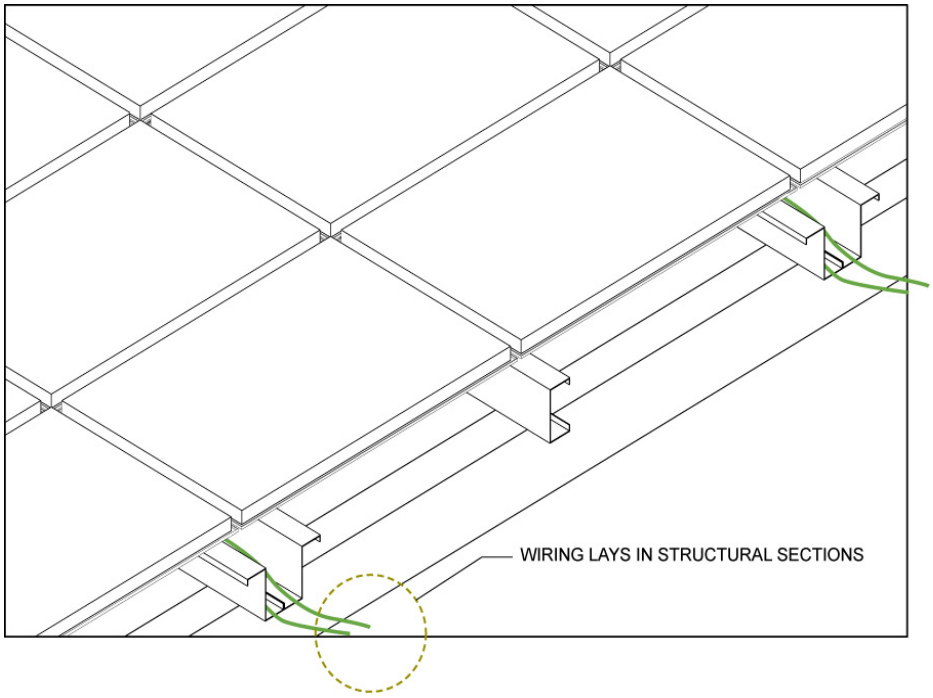

Figure 7: Drawing illustrating DC wiring design concept

Photo Credit: SunPower

The junction boxes and wires are hidden by using structural channel shapes to form wire lays without adding a second unique element.

Structural Steel

The following drawing is representative of the structural steel design calculated by Material Integrity Solutions, which the authors used to design the unit structures.

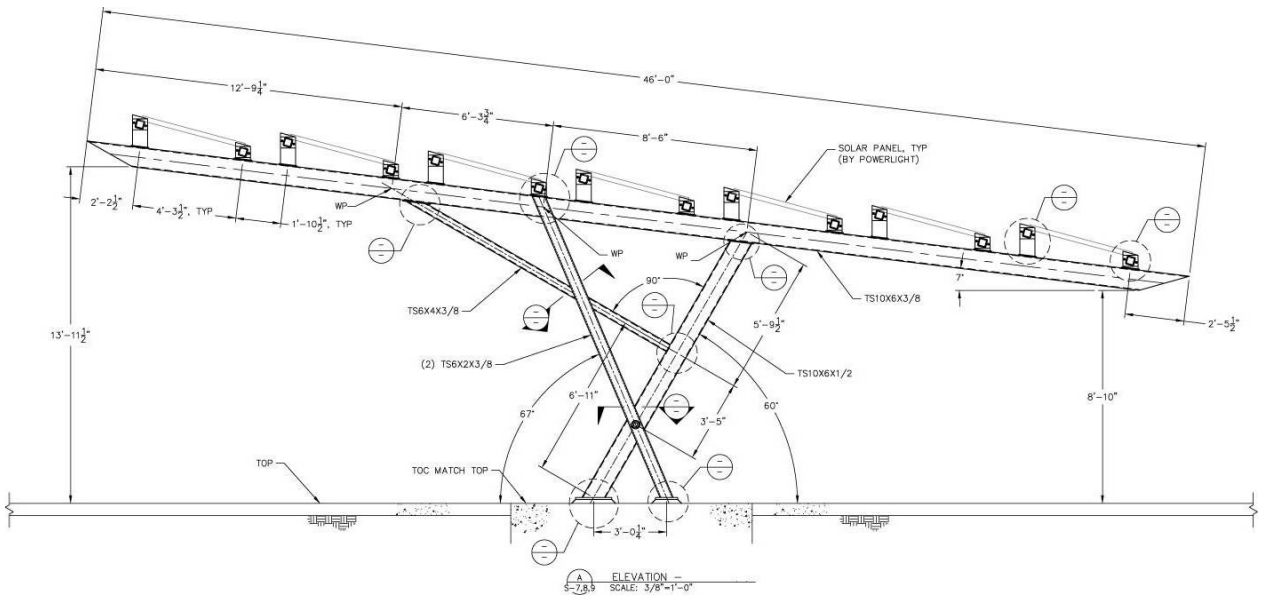

Figure 8: Drawing of structural steel design concept

Photo Credit: Material Integrity Solutions

Tensile Fabric

The following drawings (Figure 9) are representative of two preliminary tensile fabric designs calculated by Huntington Design Associates.

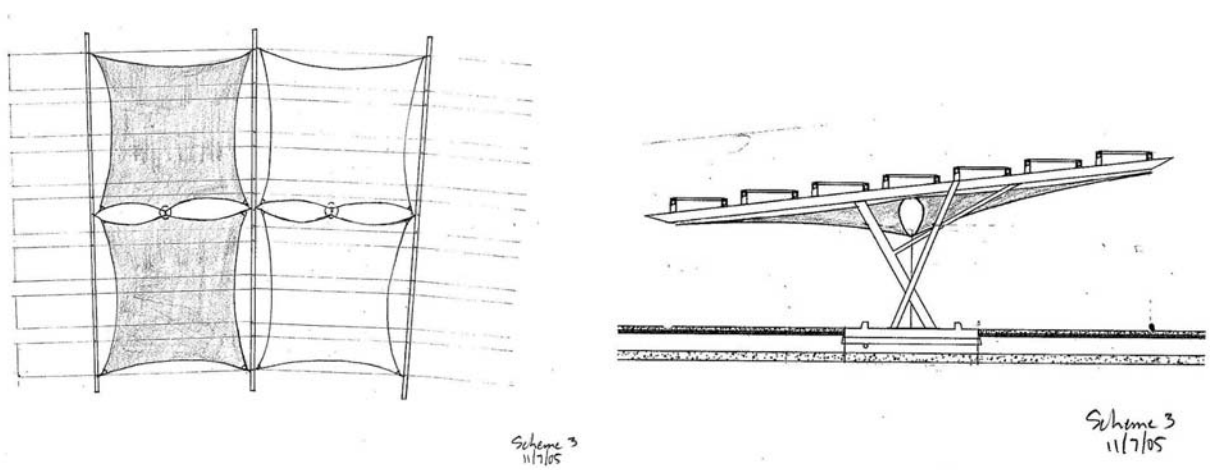

Figure 9: Sketches of preliminary tensile fabric designs

Photo Credit: Huntington Design Associates

Task 5.1.2—Final Design

Module Selection

Taking into account all these factors, SunPower has chosen to focus on the use of bifacial modules in the PV carport system. Given current market availability of bifacial modules,

SunPower based the final design on the Sanyo HIP-186DA1 module. However, the carport design can be modified to incorporate additional modules from a variety of manufacturers.

Wire Routing Combined With Structure

The following drawing (Figure 10) shows method for combining wire routing with structural members, leading to a much cleaner system and potentially reducing material and labor costs.

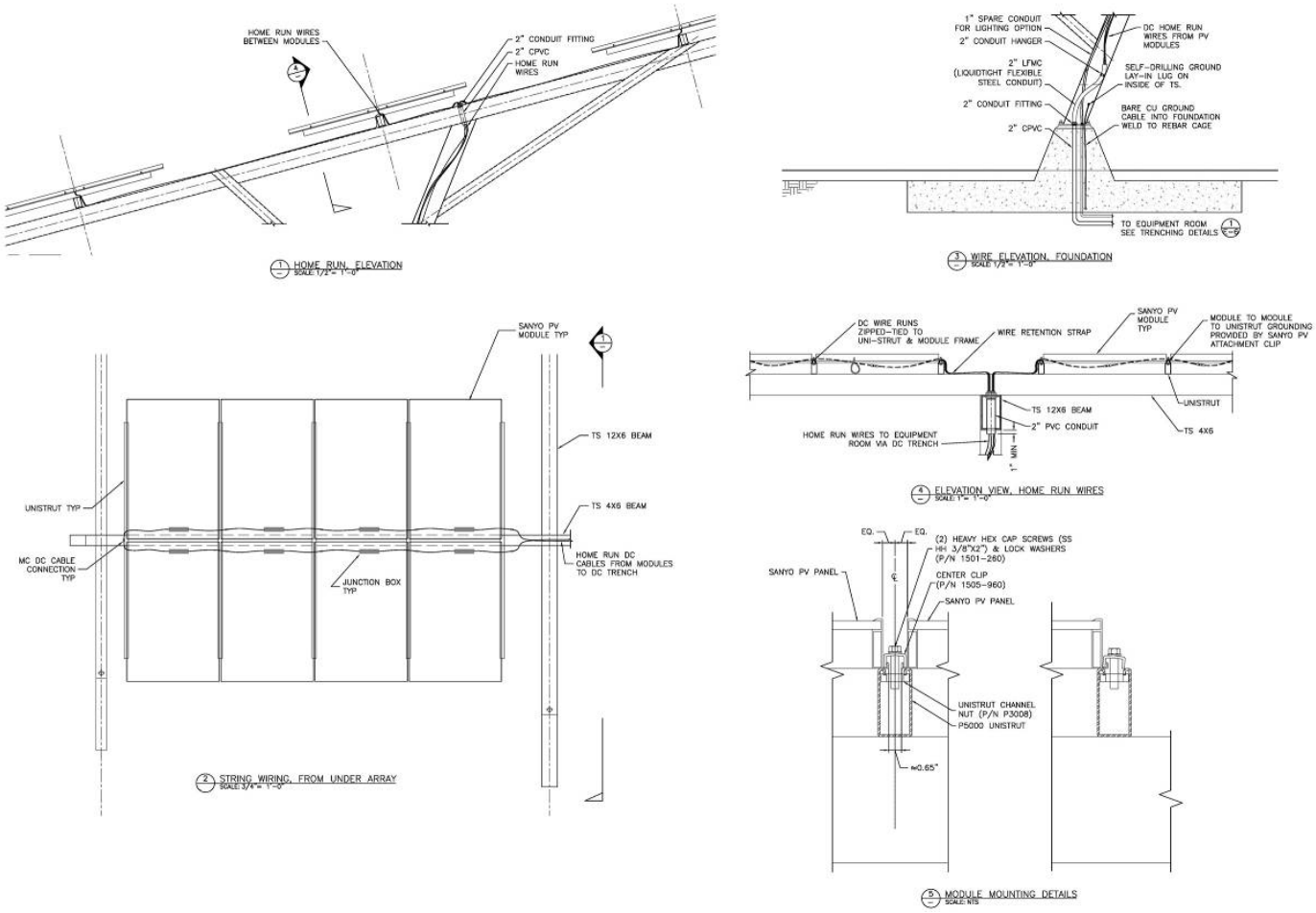

Figure 10: Typical integrated wiring details

Photo Credit: SunPower

By hiding the wiring and conduits inside the interior of the tube steel sections, adding wire trays is avoided to produce a cleaner finished product.

Structural Steel

The following drawings (Figures 11 and 12) are representative of the structural steel design calculated by Huntington Design Associates, which were used to design the unit structures.

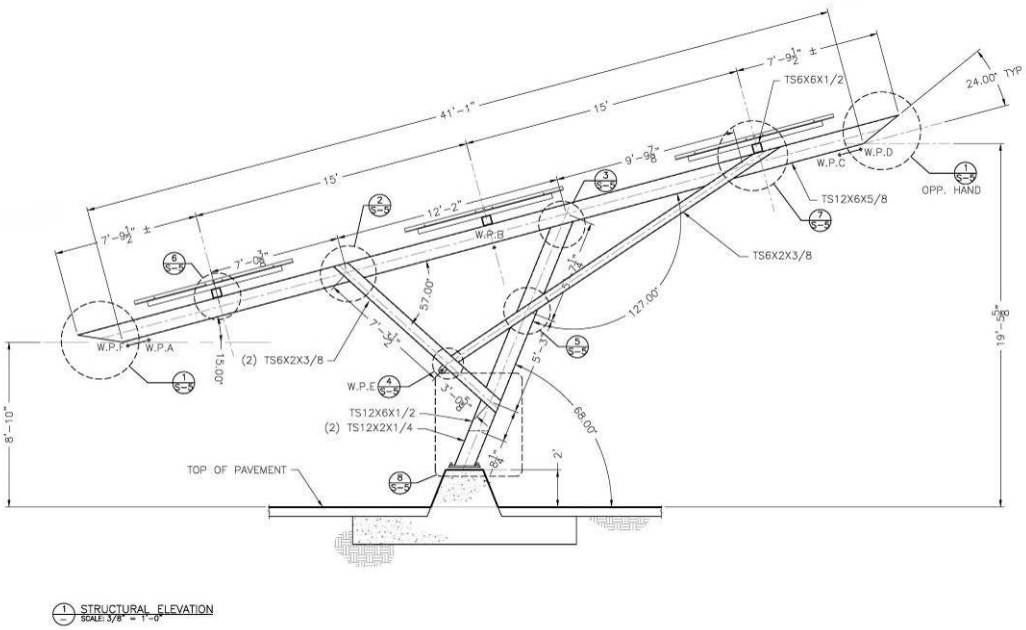

Figure 11: Steel design—elevation view

Photo Credit: Huntington Design Associates

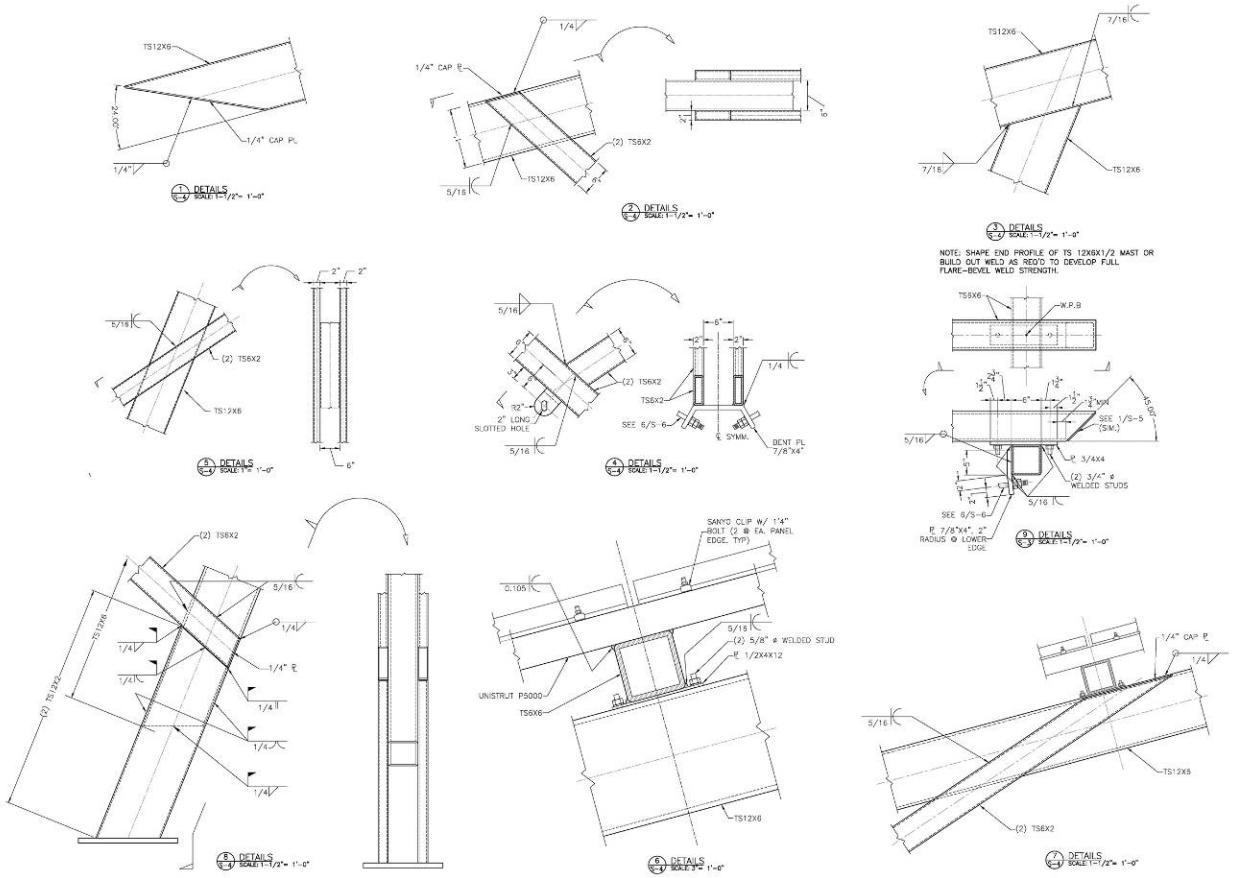

Figure 12: Steel design details

Photo Credit: Huntington Design Associates

Crash Protection

Crash protection is achieved with an above- and below-grade slab foundation. The unique shape harmonizes with the steel design, protects the steel from accidental automobile impact, and serves to hide the DC system wiring from view.

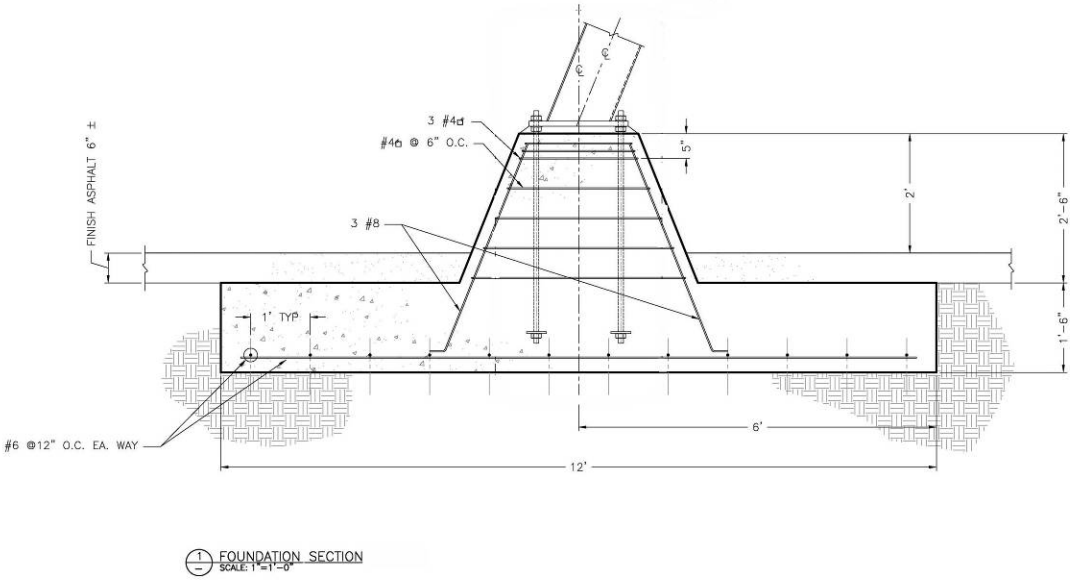

Figure 13: Slab foundation and integrated crash protection—section view

Photo Credit: SunPower

Tensile Fabric

The following drawings (Figures 14 through 16) are representative of final tensile fabric designs calculated by Huntington Design Associates.

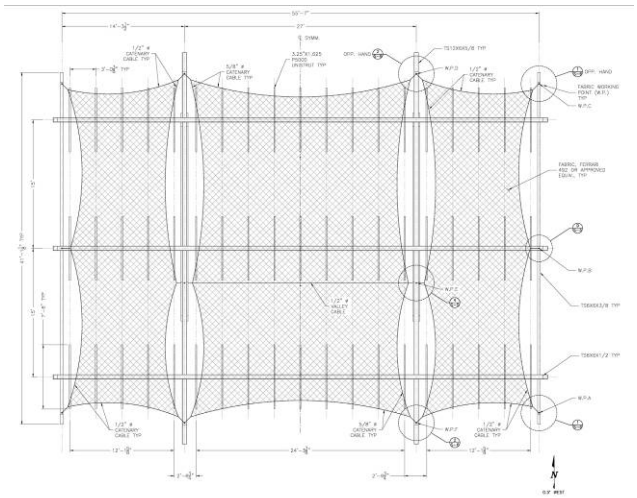

Figure 14: Fabric Design—plan view

Photo Credit: Huntington Design Associates

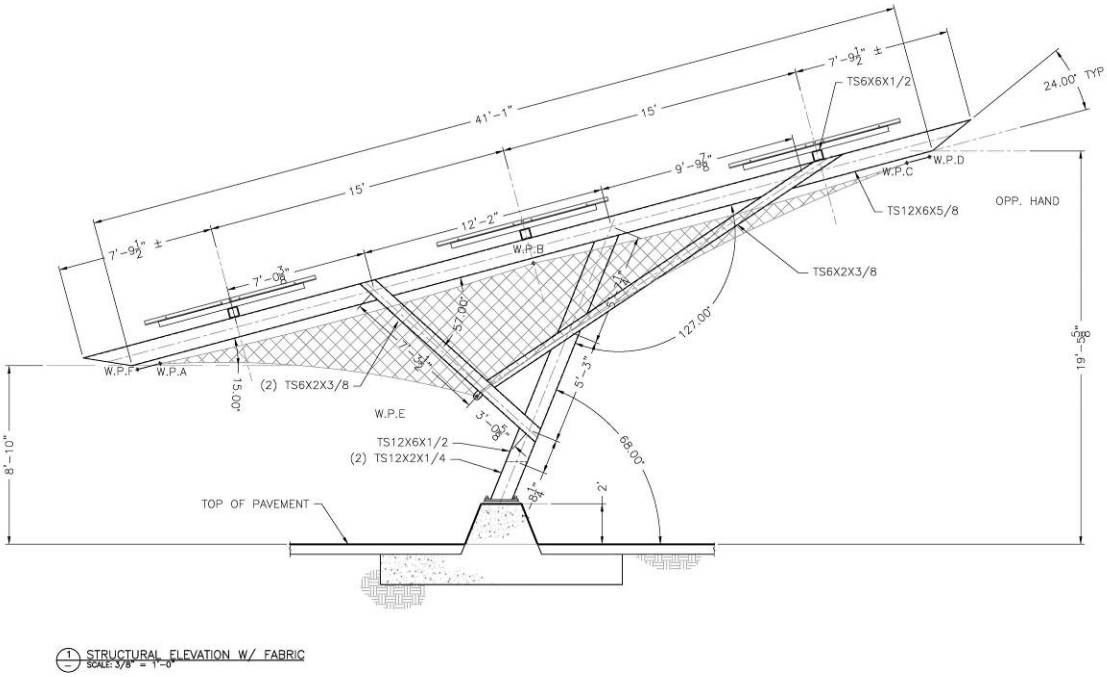

Figure 15: Fabric Design—elevation view

Photo Credit: Huntington Design Associates

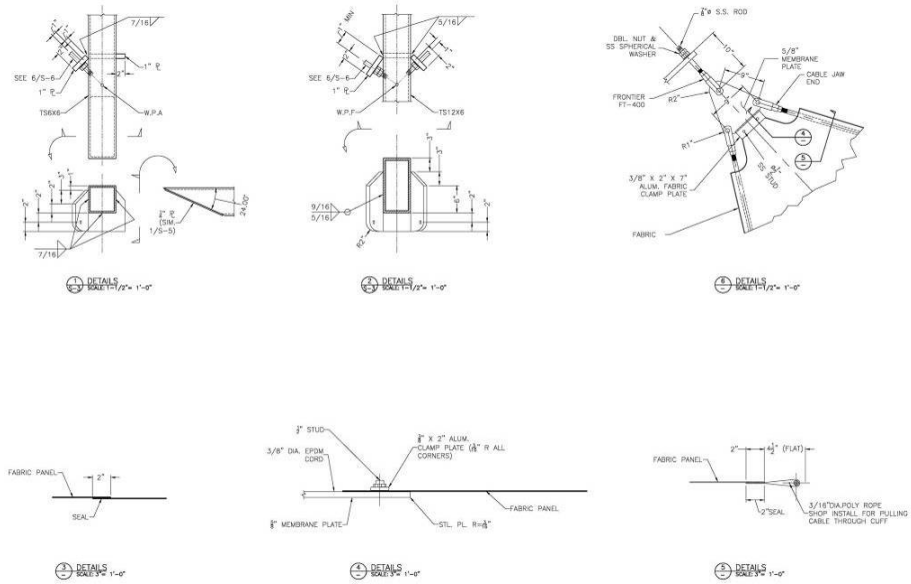

Figure 16: Fabric Design—connection details

Photo Credit: Huntington Design Associates

Task 5.1.3—Testing

Aesthetic Evaluation

Scale models built during the design development phase are shown in Figure 17 and 18. These scale models enabled SunPower to evaluate the product from a design perspective. SunPower moved forward with the design based on this preliminary evaluation.

Figure 17: Design Development Model: Double-cantilever PV carport design, featuring bifacial modules

Photo Credit: SunPower

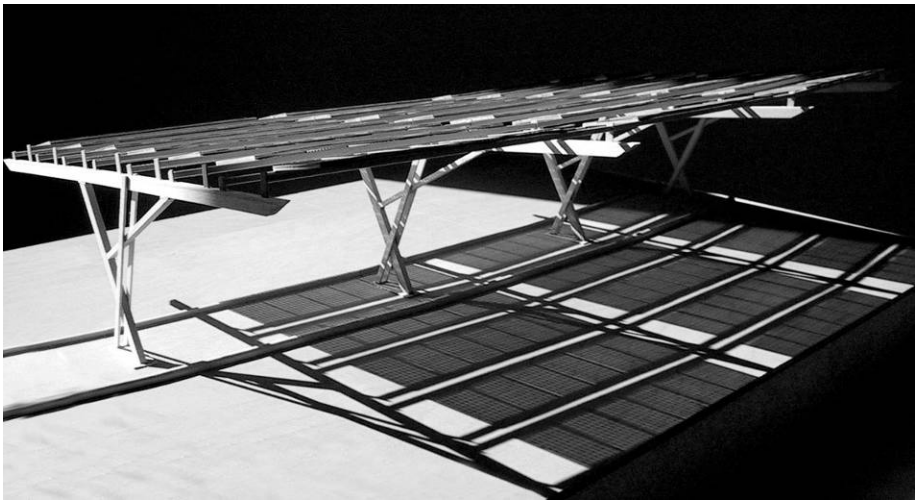

Figure 18: Double-cantilever PV carport design, without shade cloth. Physical model showing dappled shadow pattern created under bifacial modules.

Photo Credit: SunPower

Performance Testing

As predicted, the reflective material boosted the performance of the bifacial modules. In the side-by-side tests, the authors found up to 15.8 percent improvement in maximum power. On an energy basis (kWh/kWp), this improvement translates to a 17.4 percent gain in energy production. Power and energy data for a representative day are shown in Figure 19.

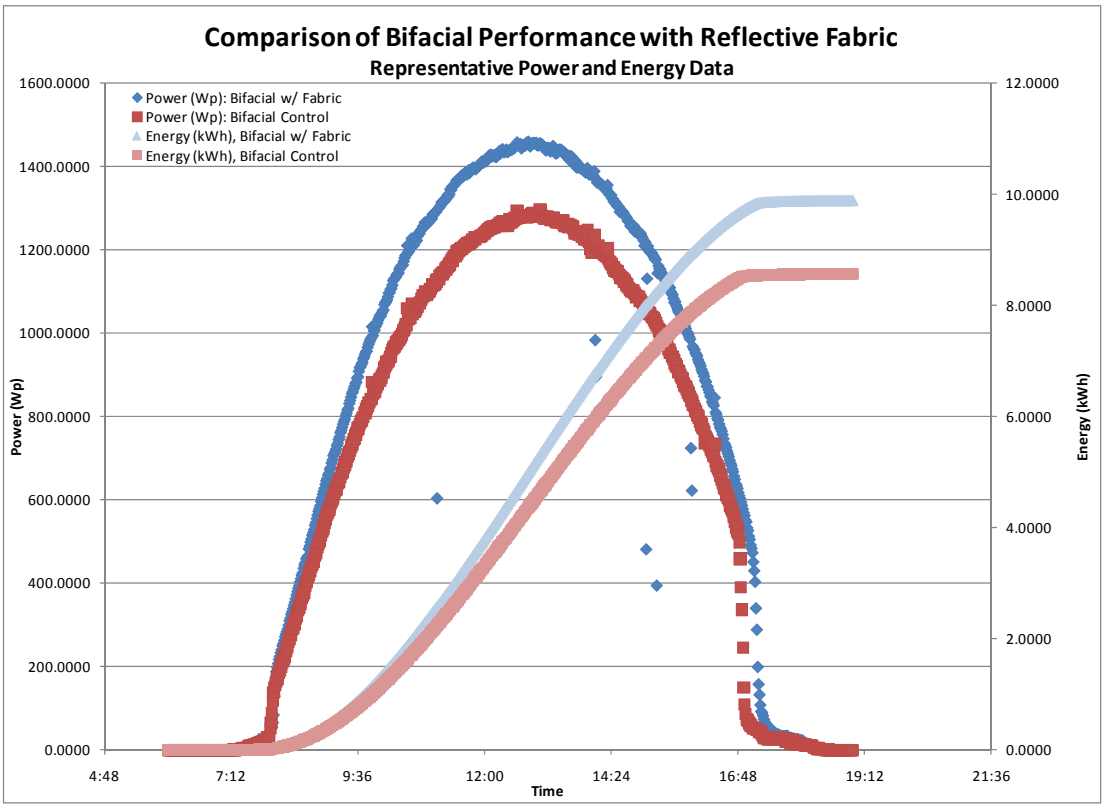

Figure 19: Power and energy production data comparing impact of reflective fabric on bifacial module performance

Photo Credit: SunPower

These results are consistent with preliminary testing of the bifacial module technology.

This data shows very promising results for coupling bifacial modules with either a reflective material for an elevated structure or a light ground cover for a ground-mounted structure. In addition, integration of this technology with a tracking system could further boost energy production. Additional evaluation of reflective materials and material mounting methods will enable SunPower to optimize performance gains at a competitive cost.

Task 5.1.4—Implementation

Preliminary Implementation—Las Vegas Valley Water District (LVSP)

Figure 20: Photograph of SunPower fixed PV carports at LVSP

Photo Credit: SunPower

Prior to finalizing the SunPower PV carport design, under Task 2 of this work effort, SunPower designed and installed a 254-kWp PV modular carport for the Las Vegas Valley Water District. The Las Vegas Valley Water District demonstration system is comprised of 1365 Sanyo HIP-186DA3 modules (eight modules per string, 87 strings).

Product Features

In deploying both demonstration projects, SunPower found that the design may need to be expanded to allow for optional features desired by the customer. For example, the Las Vegas Valley Water District had specific needs regarding steel structure finishing and foundation finishing. SunPower agreed to finish the steel structure with more expensive muriatic acid wash, matching the Las Vegas Valley Water District architectural style. Clarifying the extent of customization offered at the proposal phase will minimize changes during the construction phase.

DC Wiring

The DC wiring was not fully integrated into the structural design, and required a great deal of custom design, including specially cut holes and custom wire trays and fittings. The DC wiring was simplified for the final design demonstration project at Carmichael Water District, due to the way the research team mounted the modules and by routing the wires through the structural tube steel instead of using custom trays.

Figure 21: Demonstration site photo showing wire trays, 4x4 tubes, and module attachment hardware

Photo Credit: SunPower

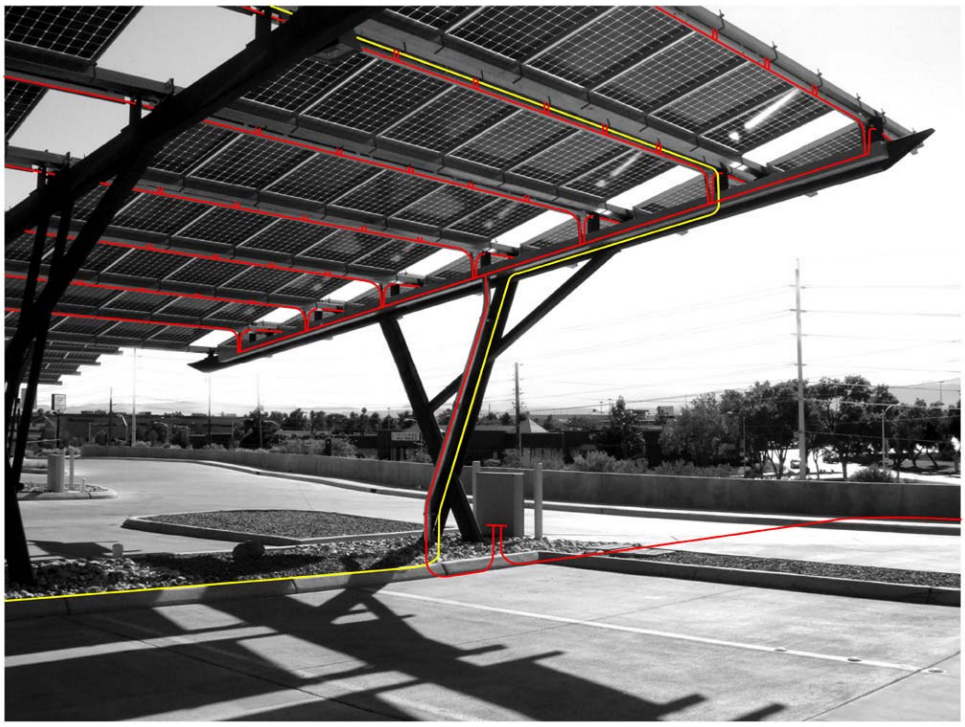

Figure 22: Demonstration site photo with DC (red) and AC (yellow) wiring overlay

Photo Credit: SunPower

Module Attachment Method

PV modules were attached with custom hardware and supported by two 4x4 square tubes each. This mounting method made it difficult to install the 4x4 tubes quickly, because the tolerance was very tight. The research team implemented a different attachment method to avoid this issue for the final design demonstration project at Carmichael.

The Las Vegas Valley Water District demonstration project enabled SunPower to test a new product design prior to the demonstration project at Carmichael. This initial demonstration project incorporates design features explored and developed in the preliminary design phase of this contract, and many of the lessons learned from this installation were incorporated into the Carmichael design.

SMUD Demonstration—Carmichael Water District

Figure 23: Architectural rendering of SunPower PV carport at Carmichael Water District

Photo Credit: SunPower

After finalizing the SunPower PV carport design under Task 2 of this work effort, SunPower designed a 17.8-kWp PV modular carport for the Carmichael Water District. The Carmichael demonstration system is comprised of 96 Sanyo HIP-186DA3 modules (eight modules per string, 12 strings).

Figure 24: Carmichael Water District PV carport system, pre-installation of tensile fabric

Photo Credit: SunPower

Figure 25: (left) Completed Carmichael Water District PV carport system, post-installation of tensile fabric; (right) detail of tensile fabric attachment.

Photo Credit: SunPower

The Carmichael demonstration system is the beta installation site for the SunPower PV Carport System. This second fielding of this product provided many lessons to both the design and installation teams. The design team will coordinate with the project construction manager to document and incorporate these lessons learned into future generations of carport systems. Overall, this demonstration system validated the fundamentals of the design, while providing clear insight into potential avenues for design optimization. Lessons learned in the course of installing this system are outlined below. These areas represent potential paths of significant cost reduction.

Tolerances and Alignment

During construction, the project team found several areas where tolerance specifications must be reviewed in order to streamline installation in the field. For example, the foundations were designed around narrow columns; in the field, this design translated to tolerance issues between carport anchor bolts and concrete reinforcing steel. For future designs, SunPower will consider moving to a slightly larger width or alternate shape to eliminate these conflicts.

To run the DC wiring to the PV modules on the structure, conduit was stubbed into the concrete foundation and through the 12x6 tube steel column, necessitating precise alignment in the field. The penetrations in the steel column base plate are fabricated off-site; during construction, we experienced difficulty with alignment in the field when the steel was mounted on the concrete foundation. The center area in the steel base plate could be enlarged to facilitate alignment and ease of installation in the field. The penetrations could then be finished with a non-shrink grout or similar material for weatherproofing and curb appeal.

Cylindrical Foundations

Utilizing a cylindrical foundation may have made steel erection and concrete placement and finishing easier. The shape of the installed foundations was difficult to form and made it difficult to pour concrete. Depending on the aesthetic requirements of the client, a cylindrical foundation design may decrease labor and materials associated with foundation installation.

Module Attachment Method

PV modules were mechanically fastened to the P5000 Unistrut, which was welded directly to the 6x6 tube steel beams of the structure. This method required precise placement of the Unistrut and, subsequently, module alignment. A more adjustable method of panel installation and placement could be devised to ease in the installation and alignment process, while still allowing sufficient area for sunlight to pass through the carport in order to optimize bifacial module output.

Steel Member Sizes

The project team increased steel member sizes to facilitate the tensile fabric shade cloth installation. Additional structural analysis will be required to further optimize this design.

Ufer Ground

In order to adequately ground the steel structure, SunPower used an Ufer Ground, a continuous copper ground mechanically attached to the rebar cage of a concrete foundation. The Ufer Ground penetrates through the non-shrink grout of the finished base plate and is mechanically fastened to the inside of the 12x6 tube steel column. To conceal the ground wire in future designs, this ground wire could penetrate the base plate similar to the conduit penetrations through the base plate and into the steel column. This would avoid the visible appearance of this copper ground from the back side of the structure on one of the columns.

Tensile Fabric Costs and Availability

Early in the construction of the carport, SunPower found the tensile fabric shade cloth difficult to source. Due to product lead time, SunPower opted to use a fabric previously incorporated on an elevated tracking structure. However, in procuring fabric for the demonstration project, the authors found potential alternatives that may offer more cost-effective solutions for future projects.

Ground Elevation Changes and Foundation Design

The foundations were built to different dimensions to allow the structure to have a perfectly level appearance from the street. For deployment on larger parking lots, this option is not the best method, as it limits gains from product standardization. Across a larger area, multiple elevation changes could present more challenges for the foundation and structural design.

The Carmichael Water District demonstration project enabled SunPower to successfully deploy a new product to market. This second demonstration project incorporates all design features explored and developed in the design phase of this contract. The demonstration project validated the product concept and design intent, while also providing invaluable insight into potential areas of improvement for future design iterations.

Task 5.1.5—Monitoring and Evaluation

The PV carport system at Carmichael Water District incorporates bifacial module technology coupled with a reflective tensile fabric. SunPower performed a short-term field test of this combined technology in October 2007. As stated above, the results of this study showed up to a 17.4 percent gain in energy production relative to bifacial modules alone.

As this study provided a limited data set, initial simulations of energy production for the Carmichael system are based on a 10 percent energy gain. SunPower uses an internal software program, PVGrid, to simulate energy production. This software is based on PVForm developed by Sandia National Laboratories and has been in use since 1988. Energy predictions have been validated against hundreds of operating PV systems. Figure 25 shows expected monthly energy production for the first full year of system operation.

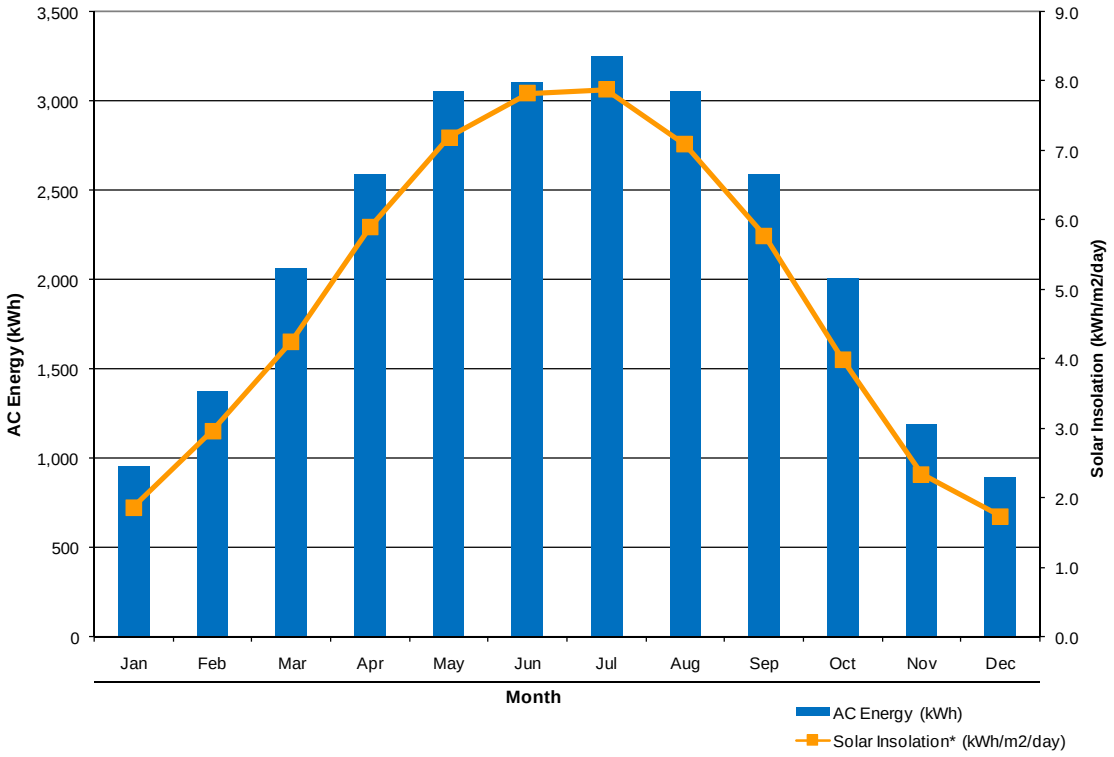

Figure 26: Predicted annual energy production and solar resource based on TMY2 data

Photo Credit: SunPower

When comparing expected daily energy production in December against the measured data, SunPower found that the actual production is well matched to the simulation results. On an average day in December, PVGrid predicts that the system will produce approximately 31 kilowatt-hours (kWh) based on TMY2 data. When comparing this prediction to an actual day with similar irradiance, the system produced more than 34 kWh; energy production from this sample day is shown in Figure 26.

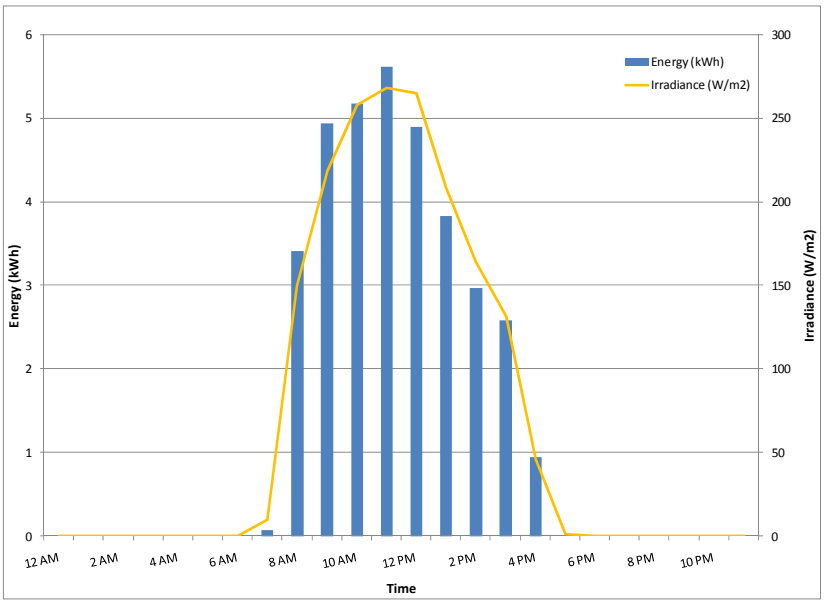

Figure 27: Energy production and irradiance on December 22, 2007

Photo Credit: SunPower

Within the available sample, there have been several days with higher irradiance, resulting in significantly higher energy production than TMY2-based predictions for a typical day in December. The average energy production from December 21 through December 26 is 52.5 kWh. Energy production and irradiance for a representative day are shown in Figure 27.

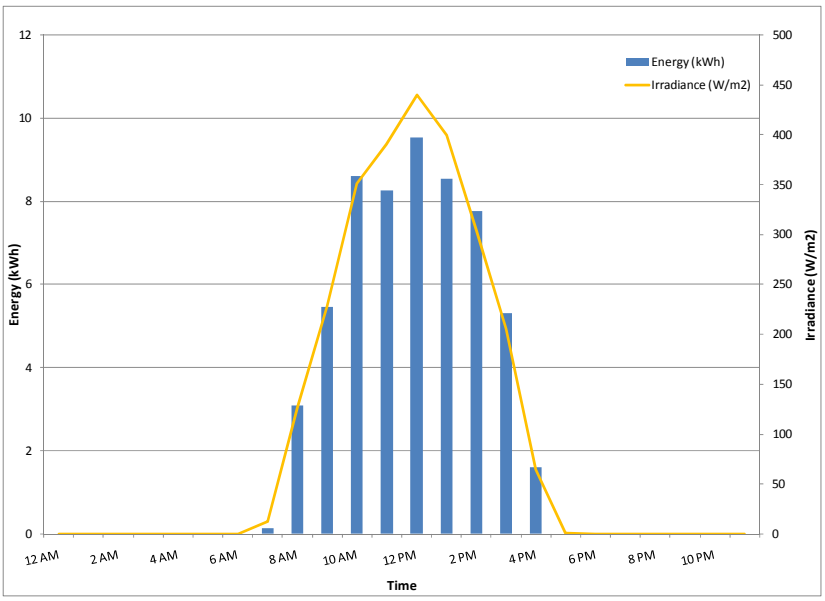

Figure 28: Energy production and irradiance on December 21, 2007

Photo Credit: SunPower

On average, the irradiance on December 21 was 40 percent higher than on December 22, with a maximum of more than 90 percent more irradiance during a single hour. When comparing

these sample days, the system produced approximately 69 percent more energy on the higher irradiance day. This result correlates well with energy production predictions for a day with similar levels of irradiance.

Because bifacial modules are new to the market, limited performance data is available. In order to develop a preliminary prediction model, SunPower performed two tests to quantify the benefit of bifacial module technology. When developing the preliminary design for the carport under Task 1, SunPower measured a 5.3 percent performance gain when comparing bifacial modules to conventional modules. Under Task 3 of this effort, the authors performed a side-by-side comparison of bifacial modules with and without reflective fabric and found a 17.4 percent gain with the fabric. This preliminary data provides fairly limited insight due to the relatively short testing periods.

When comparing the actual energy production from December 21, 2007, through January 21, 2008, the research team found that the actual energy production nearly matches the simulation results, as shown in Figure 28. The authors predicted 1127.5 kWh of energy production, and the actual production at Carmichael was 1123.8 kWh. During this period, the system experienced inverter faults, which reduced the overall energy capture to some extent. However, actual energy production of the system has exceeded simulated production for conventional modules by more than 23 percent.

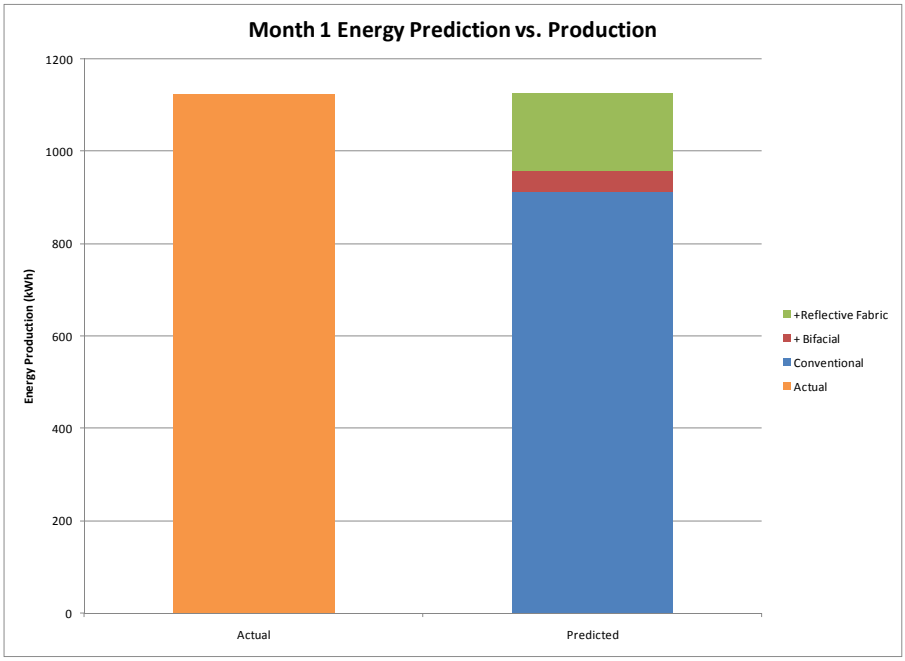

Figure 29: Comparison of actual energy production vs. predicted from 12/21/07 to 1/21/08

Photo Credit: SunPower

Chapter 4:
Conclusions and Recommendations

Conclusions

This effort has resulted in the development and deployment of a new PV carport technology, leading to the creation of more renewable options for California energy consumers. The integration of bifacial module technology with tensile cloth has been demonstrated as an effective means of boosting energy production. Initial results show the bifacial modules coupled with tensile fabric performing 23 percent above projections for conventional modules. As stated above, additional testing and monitoring is required in order to quantify the true performance gains across a broad range of weather conditions throughout the year.

Commercialization Potential

SunPower is moving forward with the commercial launch of this product as developed under this contract. A large-scale commercial system has already been installed at a customer's site. While the initial installations are considered successful, additional cost reduction will be required for mass deployment. SunPower is currently evaluating the market and potential for this unique carport, as a stand-alone system and when coupled with other commercial applications.

Recommendations

Technological Improvements

Through the work performed under this contract, the research team gained a greater understanding of the design and potential performance of PV carport systems. SunPower believes that the new carport design is an excellent product for many applications. This product enables facility owners to greatly improve utilization of parking areas. As performance-based incentives come into play, SunPower may need to investigate alternative configurations that provide better energy gain while leveraging the design features developed under this contract.

Cost

Cost reduction will remain a high priority for all types of PV systems until they can compete with other forms of electricity production without buydown programs. It is a top priority for SunPower to look continuously for ways to reduce the cost of this product as well as all of the others offered by the company. All aspects of PV carport systems must be examined on a periodic basis for ways to reduce the cost of materials, labor, and overhead. Lessons learned from the demonstration projects represent several potential avenues for cost reduction going forward.

When comparing the two demonstration projects, SunPower found a 3.8 percent reduction in cost between the SMUD demonstration project and the preliminary demonstration. Due to the large differences in relative scale, fixed costs associated with design and administration become

larger contributors to the overall cost of the project, making a side-by-side comparison of limited value in assessing the benefits of product improvements between the preliminary and final designs. A detailed comparison shows relatively equal expenditures on materials, while the smaller-scale project required significantly less in subcontracted labor and more in in-house labor and general expenses. In addition, SunPower is evaluating the PV carport product relative to carport structures, both with and without PV. This product is unique in that it provides multiple benefits to the consumer and should not be evaluated strictly on a $/Wp basis, as both shading and aesthetic benefits provide value.

Benefits to California

The achievements of this project provide several benefits to the State of California. This project has led to the development of a high-value PV product for commercial applications. In addition, the high-performance, aesthetically appealing carport provides high visibility for solar energy production.

GLOSSARY

AC	Alternating Current
DC	Direct Current
GCR	Ground Coverage Ratio
HIT	Hetero-junction with Intrinsic Thin Layer
kW	Kilowatt
kWh	Kilowatt-hour
kWp	Kilowatt-peak
LVSP	Las Vegas Valley Water District
MW	Megawatt
PIER	Public Interest Energy Research
PV	Photovoltaic
SMUD	Sacramento Municipal Utility District
W	Watt
Wp	Watt-peak