Energy Research and Development Division
FINAL PROJECT REPORT

`

331 kWe HIGH–EFFICIENCY, LOW-EMISSION ENGINE USING THERMOCHEMICAL FUEL REFORMING

Prepared for: California Energy Commission

Prepared by: Gas Technology Institute

MARCH 2011

CEC-500-2013-106

PREPARED BY:

Primary Author(s):
John M Pratapas, Project Manager
Aleksandr Kozlov, Ph.D
Edward Lyford-Pike, Cummins Inc.,
Leon LaPointe, Cummins Inc.
Daniel Moh, Cummins Inc.

Gas Technology Institute
Des Plaines, IL 60018

Contract Number: 500-06-038

Prepared for:

California Energy Commission

Pablo S. Gutierrez
Contract Manager

Linda Spiegel
Office Manager
Energy Generation Research Office

Laurie ten Hope
Deputy Director
ENERGY RESEARCH AND DEVELOPMENT DIVISION

Robert P. Oglesby
Executive Director

DISCLAIMER

This report was prepared as the result of work sponsored by the California Energy Commission. It does not necessarily represent the views of the Energy Commission, its employees or the State of California. The Energy Commission, the State of California, its employees, contractors and subcontractors make no warrant, express or implied, and assume no legal liability for the information in this report; nor does any party represent that the uses of this information will not infringe upon privately owned rights. This report has not been approved or disapproved by the California Energy Commission nor has the California Energy Commission passed upon the accuracy or adequacy of the information in this report.

ACKNOWLEDGEMENTS

Development and demonstration of the 331 KWE High–Efficiency, Low-Emission Engine Using Thermochemical Fuel Reforming was supported by the California Energy Commission's Public Interest Energy Research Program, Utilization Technology Development Company NFP, Southern California Gas Company, and Cummins, Inc.

Authors: From Gas Technology Institute: Aleksandr Kozlov, Ph.D. and John M. Pratapas

From Cummins: Edward Lyford-Pike, Leon LaPointe, and Daniel Mohr

Report title: 331 KWE High–Efficiency, Low-Emission Engine Using Thermochemical Fuel Reforming.

California Energy Commission, PIER Environmentally Preferred Advanced Generation Program.

California Energy Commission Publication Number: CEC -500-2013-106

PREFACE

The California Energy Commission Energy Research and Development Division supports public interest energy research and development that will help improve the quality of life in California by bringing environmentally safe, affordable, and reliable energy services and products to the marketplace.

The Energy Research and Development Division conducts public interest research, development, and demonstration (RD&D) projects to benefit California.

The Energy Research and Development Division strives to conduct the most promising public interest energy research by partnering with RD&D entities, including individuals, businesses, utilities, and public or private research institutions.

Energy Research and Development Division funding efforts are focused on the following RD&D program areas:

- Buildings End-Use Energy Efficiency
- Energy Innovations Small Grants
- Energy-Related Environmental Research
- Energy Systems Integration
- Environmentally Preferred Advanced Generation
- Industrial/Agricultural/Water End-Use Energy Efficiency
- Renewable Energy Technologies
- Transportation

331 kWe High–Efficiency, Low-Emission Engine Using Thermochemical Fuel Reforming is the final report for the project Contract Number 500-06-038 conducted by Gas Technology Institute and its major subcontractor Cummins. The information from this project contributes to Energy Research and Development Division's Environmentally Preferred Advanced Generation Program.

For more information about the Energy Research and Development Division, please visit the Energy Commission's website at www.energy.ca.gov/research/ or contact the Energy Commission at 916-327-1551.

ABSTRACT

This project had two major goals:

- Developing and demonstrating technology capable of maintaining engine emissions below the California Air Resources Board's 2007 distributed power generation emissions limits.
- Developing and demonstrating that thermochemical fuel reforming can enable an ultra-low emissions engine to attain an overall system energy to electricity conversion efficiency over 40 percent. Thermal fuel reforming is an advanced waste heat recovery technology that increases system brake thermal efficiency while supplying hydrogen enriched pipeline natural gas.

Project data demonstrated that emissions from the modified 331 kilowatt equivalent stoichiometric engine, operated on natural gas with cooled exhaust gas recirculation and an advanced three-way catalyst could be maintained below the California Air Resources Board's nitrogen oxides limits. Stoichiometric refers to a process in which enough air is provided to completely burn all of the fuel in the engine. The project did not demonstrate consistent attainment of the California Air Resources Board 2007 carbon monoxide emission limits for distributed generation.

Integrating the thermochemical recuperation system into the operation of the advanced 331 kilowatt equivalent engine with three-way catalyst for both ultra-low emissions and higher efficiency proved problematic. The most challenging constraint was the inability to operate the 331 kWe thermochemical recuperation system independently of the engine. This limited the ability to establish the best operating parameters for the thermochemical recuperation system, and its performance also degraded over time. Researchers concluded the project without determining the root cause of these performance problems. Preliminary findings suggested that carbon deposition may have adversely affected the activity of the reforming catalyst. Some sulfur poisoning of the reforming catalyst may also have accidently occurred. While in-situ regeneration of the reforming catalyst was attempted, the improvement was sustainable for only a few hours. This report includes recommended strategies for addressing the thermochemical recuperation system performance issues.

Keywords: Hydrogen enriched natural gas, thermochemical recuperation, NOx, CO, stoichiometric engine, cooled-exhaust gas recirculation, catalyst, high efficiency, ARB 2007 distributed power generation emissions limits, energy gain

TABLE OF CONTENTS

ACKNOWLEDGEMENTS ..... **i**

PREFACE ..... **ii**

ABSTRACT ..... **iii**

TABLE OF CONTENTS ..... **iv**

LIST OF FIGURES ..... **vi**

LIST OF TABLES ..... **ix**

EXECUTIVE SUMMARY **1**

Introduction 1

Project Purpose 1

Project Results 2

Project Benefits 3

CHAPTER 1: Introduction **5**

1.1 Background and Overview 7

1.1.1 Background on Cummins QSK19 G Engine Used in this Project 7

1.1.2 Background on Thermo Chemical Recuperation Technology Developed and Used in this Project 9

CHAPTER 2: Project Objectives **12**

CHAPTER 3: Project Approach or Methods **14**

3.1 TCR System Development 14

3.1.1 Laboratory Evaluation of Recuperative Reformer (Task 2.1) 14

3.1.2 Pilot Scale TCR System Development (Task 2.2) 19

3.1.3 Reforming Catalyst for Pilot-Scale TCR System 25

3.1.4 Development of Full-Scale TCR System for 331 kWe Engine (Task 2.3) 29

3.2 Development of QSK19G Engine and After-Treatment System for Hydrogen-Enriched Fuel (Task 3) 30

3.2.1 Generate Project Work Plan for QSK19G Engine Development, Optimization, and Integration with TCR System (Task 3.1) 30

3.2.2 Test Matrix Showing the Number of Test Conditions and Replicated Runs 33

3.2.3 Hydrogen Enrichment Testing of Baseline QSK19G Engine Under Stoichiometric Conditions (Task 3.2) 35

3.2.4 Prediction of In-Cylinder Combustion of Hydrogen-Enriched Natural Gas Using Computational Fluid Dynamics (CFD) Tools (Task 3.3) 39

3.2.5 Design Optimal Combustion Recipe for the QSK19G Engine Using Hydrogen-Enriched Natural Gas (Task 3.4) 40

3.2.6 Procure, Assemble, and Test the Hydrogen-Enriched Natural Gas QSK19G Combustion Recipe and After Treatment System (Task 3.5) 41

3.3 Demonstrate Integrated TCR, QSK19G Engine and After-Treatment System (Task 4) 55

3.3.1 Integrate and Test TCR System with QSK19G Engine and After Treatment Designed for Hydrogen-Enriched Natural Gas (Task 4.1) 55

3.4 Measuring Parameters 61

3.5 Test Procedure Followed 62

3.6 Data Analysis and Quality Assurance Procedures Followed 64

3.6.1 Demonstration Test of Combined TCR/Engine/After Treatment System (Task 4.2) 64

CHAPTER 4: Project Results 66

4.1 TCR System Development 66

4.1.1 Laboratory Evaluation of Recuperative Reformer (Task 2.1) 66

4.1.2 Pilot Scale TCR System Testing (Task 2.2) 70

4.1.3 Development of Full-Scale TCR System for 331 kWe Engine (Task 2.3) 82

4.2 Development of QSK19G Engine and After-Treatment System for Hydrogen-Enriched Fuel (Task 3) 86

4.2.1 Generate Project Work Plan for QSK19G Engine Development, Optimization, and Integration with TCR System (Task 3.1) 86

4.2.2 Hydrogen Enrichment Testing of Baseline QSK19G Engine Under Stoichiometric Conditions (Task 3.2) 86

4.2.3 Prediction of In-Cylinder Combustion of Hydrogen-Enriched Natural Gas Using Computational Fluid Dynamics (CFD) Tools (Task 3.3) 91

4.2.4 Design Optimal Combustion Recipe for the QSK19G Engine Using Hydrogen-Enriched Natural Gas (Task 3.4) 96

4.2.5 Procure, Assemble, and Test the Hydrogen-Enriched Natural Gas QSK19G Combustion Recipe and After Treatment System (Task 3.5) 98

4.3 Extended ATWC Operation and Compliance Assessment 102

4.4 Demonstrate Integrated TCR, QSK19G Engine and After-Treatment System (Task 4) .. 105

4.4.1 Integrate and Test TCR System with QSK19G Engine and After Treatment Designed for Hydrogen-Enriched Natural Gas (Task 4.1) 105

4.4.2 Demonstration Test of Combined TCR/Engine/After Treatment System (Task 4.2) 110

CHAPTER 5: Conclusions and Recommendations 111

5.1 Conclusions 111

5.2 Commercialization Potential 111

5.3 Recommendations 112

5.4 Benefits to California 114

GLOSSARY 115

REFERENCES 117

LIST OF FIGURES

Figure 1: Simplified Flow Diagram of TCR System for Natural Gas Engine Configured for Stoichiometric Combustion with Cooled Exhaust Gas Recirculation 10
Figure 2: Simplified Flow Diagram for Natural Gas/Exhaust Gas Reforming 17
Figure 3: Experimental Rig for Exhaust Gas/Natural Gas Reforming 18
Figure 4: Heat Exchange Tube with Catalytic Insert Inside Inner Tube 18
Figure 5: Catalytic Inserts 19
Figure 6: Flow Diagram of the Tubular Recuperative Reformer with Tubes in Series 21
Figure 7: Flow Diagram in Single Recuperative Reformer Tube 21
Figure 8: Schematic of Pilot-Scale TCR Experimental Unit for GTI Research Engine 22
Figure 9: Assembly Drawing of the Tubular Reformer 23
Figure 10: End View of Pilot Scale Recuperative Reformer for 50 kWe Engine 24
Figure 11: End View of RR Showing Intake and Exhaust Ports 24
Figure 12: Schematic Diagram of the Pilot-Scale Engine/TCR System Experimental Rig 27
Figure 13: GTI 50 kWe Engine Test Stand with Cooled EGR System Installed 28
Figure 14: Four-Tube Pilot-Scale Recuperative Reformer Being Installed on the GTI 50 kWe Engine Test Stand 28
Figure 15: Hydrogen Blending System for QSK19L Engine Test Cell 32
Figure 16: Flow Diagram for QSK19L Engine and EGR System 32
Figure 17: Hydrogen Metering Stand for QSK19L Engine Test Cell 36
Figure 18: Engine and Low Pressure Loop EGR System 37

Figure 19: Laboratory Low Pressure Loop EGR System 38
Figure 20: ARICE Baseline Test Cell Configuration 44
Figure 21: Final Space Claim Model Comparison 45
Figure 22: ATWC Test Cell Installation 46
Figure 23: System Schematic - Previous Charge Cooler Design 47
Figure 24: System Schematic - New Charge Cooler 48
Figure 25: Original and New Improved Turbocharger Model in Cycle Simulation Program 50
Figure 26: Compressor Outlet Temperature Versus H2 Mass Function 51
Figure 27: Compressor Outlet Temperature Predictions Versus Brake Mean Effective Pressure 52
Figure 28: Emission Measurement Locations 53
Figure 29: Emissions Sampling System Diagram 54
Figure 30: Dithering Strategy Diagram 55
Figure 31: Schematic of ARICE System in Test Cell 56
Figure 32: Model of ARICE System in Test Cell 57
Figure 33: TCR Installed in Test Cell at Cummins 58
Figure 34: Cummins Advanced Three Way Catalyst 58
Figure 35: Reformate Cooling Rig 59
Figure 36: Gaseous Emissions Sampling System 60
Figure 37: Fuel System Diagram Used with TCR System 61
Figure 38: TCR Energy Ratio Versus EGR and Reforming Temperature 69
Figure 39: TCR Energy Ratio Versus Hydrogen/Carbon Ratio (H/CR) for Burnable Part of Reformed Fuel at EGR=35% 70
Figure 40: Flow Diagram for Preliminary Testing of the Pilot-Scale Reformer Tube 71
Figure 41: Single-Tube Thermo Chemical Reformer Installed at the GTI Heat-Treat Furnace (Left) and Burner for Reformed Fuel Disposal (Right) 72
Figure 42: Reformer Reactor Single Tube at Tested Conditions 73
Figure 43: Inspection of Catalyst at the Reformer Inlet (Left) and Outlet (Right) After Single Tube Tests and Carbon Deposited at Reformer Outlet (Bottom) 74
Figure 44: Pilot-Scale TCR System Arrangement for GTI 50 kWe Stoichiometric Engine with EGR and Exhaust Gas Reforming Capability 75
Figure 45: Pilot-Scale TCR/Engine System Piping & Instrumentation Diagram 76
Figure 46: Recuperative Reformer Measuring Points 77
Figure 47: Insulated TCR Installed on GTI Research Engine Unit 78
Figure 48: Sulfur Scrubber for Natural Gas Desulfurization 79
Figure 49: Pilot Scale TCR System Process Flow Diagram 80
Figure 50: Illustration of Pilot-Scale TCR/Research Engine System Test Conditions 81
Figure 51: TCR Inlet (Left) and Outlet (Right) After Tests on 50 kWe Engine 82
Figure 52: TCRS Energy Ratio Versus Oxygen Content in Exhaust Gas (Reforming Temperature T_{ref}=900F, EGR Mass Fraction 35%, Reformer Pressure 5 Inches W.C.) 83
Figure 53: TCR Energy Ratio Versus Reformer Pressure (Reforming Temperature T_{ref}=900°F, EGR Mass Fraction 35%) 83

Figure 54: Predicted Hydrogen Content in Reformed Fuel Versus EGR Fraction and Reforming Temperature 84
Figure 55: Conceptual Design of the 331 kWe Recuperative Reformer 85
Figure 56: NOx Versus EGR Fraction for 14bar BMEP Stoichiometric with EGR Testing 87
Figure 57: Combustion Duration Versus EGR Fraction for 14bar BMEP Stoichiometric with EGR Testing 88
Figure 58: Unburned Hydrocarbons Versus EGR Fraction for 14bar BMEP Stoichiometric with EGR Testing 89
Figure 59: Exhaust Oxygen Versus EGR Fraction for 14bar BMEP Stoichiometric with EGR Testing 90
Figure 60: Fixed HRR Calibration – Cylinder Pressure Comparison 92
Figure 61: Fixed HRR Calibration – HRR Comparison 92
Figure 62: Predictive Model Calibration (Lean Burn) – Cylinder Pressure Comparison 93
Figure 63: Predictive Model Calibration (Lean Burn) – HRR Comparison 934
Figure 64: Predictive Model Calibration (Stoichiometric with EGR) – Cylinder Pressure Comparison 95
Figure 65: Predictive Model Calibration (Stoichiometric with EGR) – HRR Comparison 95
Figure 66: Optimum System BTE Versus In-Cylinder End Gas Temperature Limit 97
Figure 67: Settings of IVC, Cr, and Centroid to Obtain Optimal System BTE Versus In-Cylinder Peak End Gas Temperature 97
Figure 68: Simultaneous Compliance Performance 98
Figure 69: Dual Compliance for NOx and CO 99
Figure 70: EGO Sensor Results 100
Figure 71: Ideal Dithering Results 101
Figure 72: NOx Reduction Performance Results 102
Figure 73: CO Reduction Performance 103
Figure 74: NOx and CO ATWC Performance - H2 and Natural Gas Mixtures 104
Figure 75: Scuffed Piston Resulting from Uncontrolled Knock Event 105
Figure 76: Leaking Flange, Yielded Original Bolt, and New Fastening System with High Grade Bolts and Washers 106
Figure 77: Concentration of CO in Reformate Versus Time at 15% and 72% Fuel to the Reformer 107
Figure 78: Measurements of H2 and CO Concentration in the Reformate as a Function of Time with the Portable Gas Chromatograph 108
Figure 79: Predicted and Maximum Observed (Short Term) TCR Performance as Indicated by H2 and CO Reformate Concentration 108
Figure 80: Hydrogen Content in Reformed Fuel from TCRS Tests 109
Figure 81: Reduction in System BTE and Reformate CO Concentration Versus Time 110

LIST OF TABLES

Table 1: CARB 2007 Emission Limits for Distributed Generation 6
Table 2: QSK 19 G Engine Characteristics 7
Table 3: Performance Goals for TCR on 330 kWe Engine 8
Table 4: Performance Characteristics of Advanced Reciprocating Internal Combust Engine (ARICE) Source: Energy Commission RFP 500-06-503 13
Table 5: Process Conditions to Test Catalyst Stability for ~100 Hour Run 25
Table 6: Design of Experiments Test Sequence for QSK19L Engine 33
Table 7: Engine Configuration 37
Table 8: Measurement System Analysis Results 44
Table 9: Natural Gas Optimized Performance 49
Table 10: Comparison of Cycle Simulation Predictions Versus Experimental Results 52
Table 11: Approximation Functions for TCRS Energy Ratio and H2 Content in Reformatted Fuel - Cummins 331kw Engine During Load and Thermal Transients 63
Table 12: Proposed Test Matrix for Lab Evaluation of Recuperative Reformer 66
Table 13: Test Data for Exhaust Gas/Natural Gas Catalytic Reforming 67
Table 14: Ranges of CAP for 14bar BMEP Stoichiometric with EGR Testing 86

EXECUTIVE SUMMARY

Introduction

Air emission regulation scenarios were already trending toward stricter standards when the Gas Technology Institute (GTI) developed and conceptualized thermochemical fuel reforming (TCR) for reciprocating engines in 1996. Thermal fuel reforming is an advanced waste heat recovery technology that increases system brake thermal efficiency while supplying hydrogen enriched pipeline natural gas. GTI recognized at that time that it would be technically challenging to develop and demonstrate a cost-effective reciprocating engine system capable of attaining and maintaining future emission limits and efficiency standards. The California Air Resources Board (ARB) adopted stringent emission limits for distributed generation (DG) in 2007. In 2009, the California Energy Commission's Advanced Reciprocating Internal Combustion Engines (ARICE) program adopted an efficiency goal of 40 percent. Typically, there are trade-offs between ultra-low emissions and higher efficiency for reciprocating internal combustion (IC) engines.

Part of the approach proposed by the joint project team of GTI and Cummins, Inc. included taking advantage of the potential improvement in engine fuel characteristics by using hydrogen-enriched natural gas to help extend stable combustion limits at higher levels of cooled exhaust recirculation. Thermochemical recuperation was proposed as an advanced waste heat recovery technology to increase system brake thermal efficiency while supplying hydrogen enriched pipeline natural gas. A stoichiometric engine with a new "combustion recipe" and an advanced catalytic after-treatment control was proposed to achieve and maintain the ultra-low emissions limits required by the ARB DG requirements that took effect in 2007. Stoichiometric refers to a process in which enough air is provided to completely burn all of the fuel in the engine.

Project Purpose

The goal of this project was to enable continued deployment of IC engines for DG in California by developing and demonstrating a commercially viable, reciprocating IC engine system that would meet the CARB 2007 emission limits and have an overall system fuel to electricity efficiency of 40 percent. The project team did not want to sacrifice system efficiency for lower emissions due to anticipated higher prices for natural gas in the long term. In fact, the purpose was to demonstrate that the CARB 2007 emission limits for DG could be realized while the overall system efficiency was increased from baseline levels.

Cummins and GTI proposed developing an advanced reciprocating internal combustion/heat recuperation system that included the following features:

- A stoichiometric engine configuration with exhaust gas recirculation to minimize uncontrolled nitrogen oxide (NOx) emissions and maximize indicated mean effective pressure.
- An advanced three-way catalyst technology for maximum control of NOx, carbon monoxide (CO), and unburned hydrocarbons.

- Hydrogen enhanced combustion to afford the highest practical levels of exhaust gas recirculation.
- TCR of waste heat in engine exhaust to supply hydrogen enriched fuel to the engine without fuel or energy penalties and to improve the overall system thermal efficiency.

Project Results

The work scope was divided as follows:

- Cummins would develop the necessary "combustion recipe," including engine controls and hardware to operate its 19-liter (331 kilowatta equivalent [kWe]) gas engine in a spark-ignited, stoichiometric configuration with cooled-exhaust gas recirculation, and advanced three-way catalyst on hydrogen/pipeline natural gas fuel blends.
- GTI would develop a TCR system for integration with the Cummins 331 kWe engine to convert waste heat in the engine exhaust into chemical energy that could be recycled back to the engine combustion system for higher system efficiency.
- Cummins, with support from GTI, would install the TCR system into a test cell at the Cummins Technology Center in Columbus, Indiana to test the performance of the fully integrated, engine combustion recipe/three-way catalyst and TCR system.

The project achieved the following technical objectives:

- An advanced, stoichiometric engine configuration with the capability for the highest practical levels of exhaust gas recirculation was demonstrated on both pipeline natural gas and hydrogen enriched pipeline natural gas.
- The combustion characteristics of hydrogen enriched pipeline natural gas in an engine environment suitable for achievement of the project goals was determined.
- Analytical tools to adequately predict both in-cylinder as well as complete system performance on pipeline natural gas and hydrogen enriched pipeline gas were developed.
- The critical engine components that could best utilize the characteristics of hydrogen enriched fuels were specified, manufactured, installed and tested on a 331 kWe engine.
- An overall engine system configuration that best utilized the characteristics of the individual sub-system components was defined.
- The researchers developed and demonstrated the required engine after-treatment components and control strategies necessary for compliance with the CARB 2007 DG limits for NOx.
- Definitive plans and strategies to achieve CARB 2007 DG limits for CO while simultaneously maintaining NOx limits were tested or specified.
- The key performance characteristics, requirements and issues of a novel 331 kWe TCR system for waste heat recovery from engine exhaust when integrated with the 331 kWe Cummins engine configured for compliance with the CARB 2007 DG emission limits were documented.

- TCR integrated with a 331 kWe engine was positively demonstrated, although the target performance could not be maintained for an extended period of time.

It was estimated that the 331 kWe TCR system integrated with the 19-liter gas engine at the Cummins test cell was operated over 1,000 hours with engine exhaust gas entering the catalytic section of the recuperative reformer. Unfortunately, performance problems with the TCR system adversely affected the capability of the engine to be operated at its highest efficiency. The time and effort spent trying to address TCR performance issues precluded the project team from running a planned 500-hour endurance test of the integrated TCR/advanced engine system.

The project also ended before a thorough "root cause" assessment of the performance problems experienced with the TCR system could be completed. Preliminary findings suggested that the activity of the reforming catalyst used for TCR was adversely affected in two ways: (1) carbon deposition that blocked active sites supporting the chemical reforming reactions that produce hydrogen enriched natural gas; and (2) possible poisoning of the catalyst from deposition of complex sulfur species that were unexpectedly generated from volatilization of the sealant material used to form a gasket on the flanges of the TCR inlet and outlet headers. Attempts to regenerate the reforming catalyst resulted in a performance improvement that was only sustainable for a few hours.

The researchers plan to remove the catalytic inserts from the TCR system. The catalyst supplier (Catacel Corp.) will analyze samples of the inserts removed from the reformer to evaluate the post-test condition of the catalyst activity, structure and any morphological changes. Any measures to address the performance issues documented with the TCR system would have to be completed in a new, follow-on project. These measures might include but not be limited to developing an alternative catalyst formulation to further mitigate the potential for carbon deposition and redesigning thermal management within the heat recovery/exchange section of the TCR system, leading to better performance and endurance.

Project Benefits

This project was designed and executed to help meet the PIER goal of improving the energy cost and value of California's electricity by providing a cost-effective, technology solution for reciprocating engines that are required to comply with the CARB 2007 DG emission limits. Gas-fired reciprocating IC engines in DG applications are the lowest capital cost prime movers with the highest efficiency in the 1-10 megawatt (MW) size range with costs far below competing prime mover technologies. Adding selective catalytic reduction (SCR) to lean burn engines will add significant capital cost without any efficiency benefit and lead to increased operating and maintenance costs. Achieving the CARB 2007 emission limits with a concurrent gain in efficiency would help maintain the cost competitiveness of reciprocating engine DG and combined heat and power (CHP) systems. Cummins is proceeding with development of the Advanced Three Way Catalyst System with stoichiometric cooled Exhaust Gas Recirculation (EGR) operation for future products destined for very low emissions markets such as California. If commercially successful, this product would provide greater choices for California energy consumers and ratepayers.

If the TCR technology developed in this project can eventually be commercialized and integrated with reciprocating IC engines, such a product would support attainment of the Senate Bill 1250 (SB 1250, Perata, Energy: Cost-Effective Energy Efficiency Programs: Renewable Energy Resources) goals for the California Energy Commission's Public Interest Energy Research (PIER) program. One of these goals is to "develop and help bring to market, energy technologies that provide increased environmental benefits, greater system reliability, and lower system costs," and another goal is to develop "advanced electricity generation technologies that exceed applicable standards to increase reductions in greenhouse gas emissions from electricity generation, and that benefit electric utility customers."

CHAPTER 1: Introduction

Currently available natural gas reciprocating engine systems are challenged to satisfy the most stringent emission limits proposed for distributed generation in California and other ozone non-attainment areas. While the price of natural gas has recently come down, attaining higher efficiency is essential if reciprocating engines are to remain competitive with electricity that can be purchased off the grid. With funding provided by the U.S. Department of Energy, the state of the art for reciprocating natural gas engines is being advanced through the Advanced Reciprocating Engine Systems (ARES) program. Cummins, Caterpillar and Waukesha Engine companies are participating in this cooperative R&D program.

All the engine companies participating in the ARES program have reported that to achieve the goal of 50 percent brake thermal efficiency (BTE) by 2010 would require some means of reducing or utilizing the substantial amount of heat engine normally rejected with the exhaust gases. Cummins has been developing the stoichiometric QSK19G engine with cooled exhaust gas recirculation (EGR) and three way catalysts under Phase 2 of the US DOE ARES program. They refer to this engine as their Stoichiometric Engine Spark Ignited (SESI). The goals for development of the SESI are NOx emissions less than 0.1 gram/hp-hour and greater than 44 percent BTE. Combustion system optimization includes advanced piston bowl design, spark timing, and EGR fraction.

Beginning in 2003, the Gas Technology Institute, with support from natural gas companies including Southern California Gas and National Fuel Gas, the New York State Energy Research and Development Authority (NYSERDA), the U.S. DOE and the California Energy Commission and Cummins, began developing thermo chemical recuperation (TCR) for application to reciprocating internal combustion engines. These projects included technical and economic feasibility studies for engines used in distributed generation and gas compression, laboratory-scale validation of low temperature reforming under conditions simulating engine exhaust gas, model simulation studies and conceptual designs of TCR systems. The results of this research and development are available in reports included in the bibliography section of this report.

In the fall of 2006, GTI and Cummins submitted their proposal to the California Energy Commission's request for proposals, RFP #500-06-503 "Research, Development, and Demonstration Projects Focused on Reducing Emissions and Improving Efficiency of Advanced Reciprocating Internal Combustion Engines (ARICE) for Distributed Generation and Combined Heat and Power Applications in California". GTI and Cummins proposed to develop and demonstrate a system that would satisfy the following objectives outlined in the RFP:

- Exceed current and future California atmospheric emissions requirements;
- Improve fuel-to-electricity conversion efficiency;

The goal of the Project was to develop and demonstrate an integrated technology system capable of exceeding the CARB 2007 emission limits for DG while also exceeding the Advanced Reciprocating Internal Combustion Engines (ARICE) 2009 fuel to electric efficiency target of >40 percent.

The CARB 2007 emissions limits for distributed generation are provided in Table 1 below.

Table 1: CARB 2007 Emission Limits for Distributed Generation

	lb/MW-hr	Equivalent ppm @ 15% O2**
NOx	0.07*	1.6-4.0
CO	0.10*	3.7-9.3
VOC	0.02*	1.3-3.2

*CHP credit of 1 MW-hr per 3.4 MMBtu of waste heat recovered

** HHV efficiency range: 28%-70%

The following performance metrics were proposed for judging technical progress during the project:

- Reduce baseline (pipeline natural gas only) engine NOx emissions of Cummins 19-litergas engine by at least 50 percent with hydrogen-enriched combustion using a hydrogen/pipeline natural gas fuel blend of about 25 percent hydrogen and 75 percent pipeline natural gas (by volume).
- Achieve rated load on a Gas Technology Institute (GTI) 50-75 kWe pilot-scale engine with TCR using at least 5 percent less pipeline natural gas than an engine without TCR.
- Operate a Cummins 19-liter gas engine integrated with TCR system for 500 hours without exceeding CARB 2007 emission limits and document average fuel savings of at least 5 percent compared to baseline.

Cummins, Inc. and GTI proposed to collaborate to reach these objectives. Cummins would develop the necessary engine controls and hardware to operate their 19-liter gas engine on hydrogen pipeline natural gas fuel blends. GTI would develop a thermo chemical recuperation system for the 19-liter engine. The TCR system would be designed recycle waste heat from the engine exhaust back to the engine in the form of chemical energy. This would be accomplished via thermo chemical fuel reforming reactions that result hydrogen enriched pipeline natural gas. Cummins and GTI would integrate the engine and TCR system for the 500-hour demonstration test at Cummins Technology Center in Columbus, IN.

1.1 Background and Overview

1.1.1 Background on Cummins QSK19 G Engine Used in this Project

The development of this project was executed on the Cummins QSK19 platform. This engine is widely used today in many applications such as power generation, oil and gas, irrigation, and so forth. Key characteristics of this engine are listed in Table 2.

Table 2: QSK 19 G Engine Characteristics

QSK19 Gas	
Engine Displacement	19 L
Number Cylinders	6
Bore & Stroke	159 x 159 mm
Oils System Capacity	15 gallons
Net Weight	4000 lb

Cummins proposed this engine because it provided a platform to extend R&D they were already co-funding with the US DOE. In that program, Cummins was developing a high efficiency/low emissions 331 kWe stoichiometric natural gas engine with cooled exhaust gas recirculation (EGR) and catalytic after-treatment. To exceed the CARB 2007 emission limits for DG, Cummins proposed to design and optimize the engine combustion system and controls for operation on hydrogen-enriched natural gas fuel. As described below, this new fuel would be supplied by a TCR system developed by GTI.

Table 3 below provides a summary of the baseline performance of the Cummins 330 kWe engine and the performance goals established for demonstrating the TCR system in a 500 hour test originally scheduled to commence late spring 2009. The baseline conditions were the result of the Cummins development efforts co- funded by the US DOE under the ARES program.

Table 3: Performance Goals for TCR on 330 kWe Engine

Item	Units	Baseline	New CEC/GTI/Cummins Demonstration
Crankshaft Power	kW / hp	330 / 450	330 / 450
Engine Speed	RPM	1200	1200
BMEP	bar	17.8	17.8
Base Engine BTE	%	36.9	39.0
Turbine Outlet Temperature	deg F	1100	1100
Fuel Chemical Energy Gain by Thermal Chemical Recuperator	(-)	N/A	1.06
System BTE	%	36.9	41.3
Natural Gas Relative Flow	(-)	1.00	0.89
Lambda	(-)	0.97	1.00
EGR Fraction	(-)	27	35
Engine Out BSNOx	gNOx/bhp-hr	0.72	1.30
Three Way Catalyst NOx Design	(-)	Baseline Technology	Advanced Technology
Three Way Catalyst NOx Conversion Efficiency	%	94.4	98.5
System Out BSNOx	gNOx/bhp-hr	0.04	0.02
Natural Gas Lower Heating Value	BTU/lb	20500	20500

To advance the baseline engine toward the demonstration goals, the following approach was selected:

- Develop an optimal "combustion recipe" for the 331 kWe stoichiometric engine that was based upon very high exhaust gas recirculation (EGR) rates to minimize uncontrolled NOx emissions and to maximize indicated mean effective pressure. This combustion recipe could include, but not be limited to, combustion chamber shape, camshaft design, spark plug geometry, and specifications of turbocharger, after-cooler and EGR cooler.
- Work with supplier to specify an advanced three-way catalyst technology for maximum control of NOx, CO, and unburned hydrocarbons.
- Employ hydrogen enhanced combustion to afford highest practical levels of cooled-EGR.
- Integrate the engine with thermo chemical recuperation (TCR) system that utilized waste heat in engine exhaust to:
    - Supply hydrogen- enriched fuel to the engine without fuel or energy penalties and,
    - Improve the overall system thermal efficiency by about 4.4 percentage points.

At the time of the proposal, there were several published papers written by others who had tested the effects of hydrogen-enriched natural gas on the performance and emissions from spark-ignited, reciprocating internal combustion engines. In the proposal to Energy Commission leading to this project, Cummins indicated that it had performed investigations

with pure H2 and HCNG blends on a single cylinder engine derived from the C8.3 (8.3 L) automotive natural gas platform. Very low NOx emissions at higher efficiencies than NG operation was demonstrated at 1200 and 1800 rpm. Nevertheless, the proposal identified that the following work would be required to develop an optimal combustion recipe for using hydrogen-enriched natural gas in the QSK19 G engine to meet the program goals for emissions and efficiency:

- The project would generate test data required to enhance existing computer models of in-cylinder combustion of hydrogen-enriched fuel. Currently available commercial codes do not address hydrogen enhanced combustion.
- The project would use the developed models to design critical engine components such as the piston bowl shape and intake ports for a 19-liter natural gas engine using hydrogen-enriched fuel to minimize emissions and maximize power. There are currently no design criteria for fabricating these components for engines operating on hydrogen-enriched fuel.
- The project would use test data from hydrogen enhanced combustion in the Cummins QSK19G engine to develop advanced engine controls for hydrogen-enriched fuel supplied from a TCR system. It is necessary to develop and integrate provisions to the prototype engine control system currently employed on the QSK19G development engine to accommodate hydrogen-enriched fuel.

1.1.2 Background on Thermo Chemical Recuperation Technology Developed and Used in this Project

A simplified depiction of a TCR system employing steam reforming is provided in Figure 1. The major equipment items include a recuperative catalytic reforming reactor and cooler. The TCR system converts engine exhaust heat to chemical energy that is returned to fuel the engine and thereby improves brake thermal efficiency. In this TCR system, the products of combustion provide water vapor and CO2 to support the reforming reactions.

Figure 1: Simplified Flow Diagram of TCR System for Natural Gas Engine Configured for Stoichiometric Combustion with Cooled Exhaust Gas Recirculation

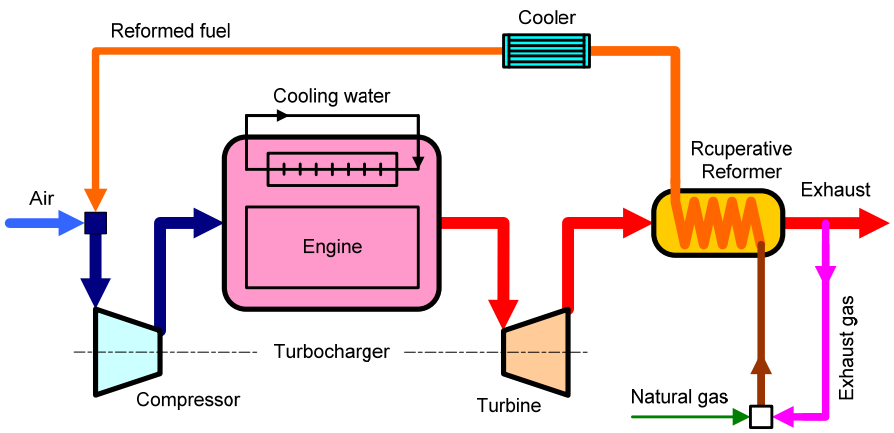

Overall, the reforming reactions are endothermic. In a TCR system, the heat to drive the reactions is provided by heat transferred from the hot engine exhaust. Power cycle efficiency increases by the amount of exhaust heat that can be successfully used to maintain the endothermic reactions.

Major control parameters for the TCR reforming reactions include steam/carbon ratio (S/CR) and reforming temperature. The S/CR controls H2 yield; thus, there is a need to find an optimum S/CR for reciprocating IC engine applications. For steam reforming using exhaust gas to supply the steam, the S/CR is directly proportional to the ratio of re-circulated exhaust gas mixed with natural gas. The reforming temperature affects the reforming rate and final composition of the reformate exiting the recuperative reformer; thus, it also affects H2 yield. The reformer pressure also controls reforming rate and composition; and the reforming rate is almost proportional to the partial pressure of CH4 (reformer pressure). For steam reforming with re-circulated exhaust gas from reciprocating engines, the exhaust gas/natural gas mixture is reformed at close to atmospheric pressure. The reformer temperature and pressure are critical parameters in sizing a reformer as is the type and amount of catalyst. In typical IC engine systems, the temperature available for the reformer is relatively low compared to industrial applications. The design approach is to maximize the use of the rejected thermal energy and to minimize the reformer size while achieving maximum attainable H2 yield.

Because of the relatively low temperature of engine exhaust gas, the design of the heat management for the catalytic reforming reactor is important to support the endothermic reactions that increase the calorific value of the hydrogen enriched natural gas that exits the reactor, is cooled and then mixed with air for combustion in the engine. The hydrogen in the reformed fuel enables more dilute engine operation (increased EGR fraction) thus reducing engine out emissions. A stoichiometric engine configuration provides exhaust gases with the highest exhaust gas temperature and water vapor content for subsequent mixing with natural gas before introduction to the catalytic reformer. The stoichiometric configuration is also necessary for proper application of a three-way catalyst for emissions control.

While GTI had previously performed extensive numerical modeling and limited laboratory testing of conventional steam reforming of natural gas at temperatures and conditions representative of those that would be expected for thermo chemical fuel reforming on a lean-burn engine, this proposed approach of using the water vapor contained in the engine exhaust from a stoichiometric engine to supply all the steam required that new modeling and laboratory validation tests be performed. Accordingly, the development of the 331 kWe TCR system would begin at the laboratory-scale.

CHAPTER 2:
Project Objectives

The objectives of this project are to develop and test a hydrogen enhanced combustion system for a 19-liter stoichiometric engine. Hydrogen enrichment will be evaluated as a means to extend the limits of cooled exhaust gas recirculation to reduce NOx emissions and increase Indicated Mean Effective Pressure (IMEP). Waste heat from the engine exhaust will be recovered in a thermo chemical recuperation (TCR) system that supplies hydrogen-enriched fuel to the engine while improving the heat rate of the engine system.

Key performance metrics for the technical success of the project include the following:

- Reduce baseline (natural gas only) engine NOx emissions of Cummins 19-liter gas engine by at least 50 percent with hydrogen-enriched combustion using a hydrogen/natural gas fuel blend of about 25 percent hydrogen and 75 percent natural gas (by volume).
- Achieve rated load on Gas Technology Institute (GTI) 50-75 kWe pilot-scale engine with TCR using at least 5 percent less natural gas than an engine without TCR.
- Operate a Cummins 19-liter gas engine integrated with TCR system for 500 hours without exceeding CARB 2007 emission limits and document average fuel savings of at least 5 percent compared to baseline.

Cummins, Inc. and GTI will collaborate to reach these objectives. Cummins will develop the necessary engine controls and hardware to operate their 19-liter gas engine on hydrogen/natural gas fuel blends. GTI will develop a thermo chemical recuperation system for the 19-liter engine. The TCR system will convert waste heat to chemical energy in the form of a hydrogen-rich fuel. Cummins and GTI will integrate the engine and TCR system for the 500-hour demonstration test at Cummins Technology Center in Columbus, IN.

The Energy Commission's solicitation leading to this project award included specific performance targets for a production prototype of the advanced reciprocating internal combustion engine (ARICE). These characteristics are re-produced below in Table 4. Later in the section of the report titled Commercial Readiness, the Project Team will provide its perspective on the potential and timeframe to realize these targets.

Table 4: Performance Characteristics of Advanced Reciprocating Internal Combust Engine (ARICE) Source: Energy Commission RFP 500-06-503

Performance Characteristics of

Advanced Reciprocating Internal Combustion Engine System (Production Prototype)

Rated Size: 300kWe

Applications: Distributed Power Generation and Combined Heat and Power

Parameter	2007	2008	2009	2010
Efficiency				
Brake Thermal Efficiency	≥35%	≥38%	≥40%	≥44%
Fuel-to-Electric Efficiency	≥32%	≥34%	≥38%	≥42%
Overall Efficiency (CHP)	≥85%	≥85%	≥85%	≥85%
Emissions-*shaft power (g/bhp-hr) ****				
Oxides of Nitrogen (NOx)	TBD	TBD	TBD	TBD
Carbon Monoxide (CO)	TBD	TBD	TBD	TBD
Volatile Organic Compounds (VOCs)	TBD	TBD	TBD	TBD
Particulate Matter (PM10)	TBD	TBD	TBD	TBD
Emissions-*power generation (lb/MWehr)*				
Oxides of Nitrogen (NOx)	<0.07	<0.07	<0.07	<0.07
Carbon Monoxide (CO)	<0.08	<0.08	<0.08	<0.08
Volatile Organic Compounds (VOCs)	<0.02	<0.02	<0.02	<0.02
Particulate Matter (PM10)	<0.03	<0.03	<0.03	<0.03
Cost				
FOB Cost ($/kWe)	≤700	≤700	≤700	≤700
Complete Installed Cost ($/kWe)**	TBD	TBD	TBD	TBD
O&M Cost ($/kWeh)	≤0.06	≤0.05	≤0.05	≤0.04
Availability & Durability				
Availability	≥88%	≥90%	≥92%	≥95%
B10 Durability (hours)	≥8,000	≥9,000	≥10,000	≥12,000
Mean Time Between Major Overhaul (hours)	≥35,000	≥40,000	≥45,000	≥50,000

* To be determined based on agreed electrical efficiency
** To be determined based on site characteristics

CHAPTER 3:
Project Approach or Methods

3.1 TCR System Development

3.1.1 Laboratory Evaluation of Recuperative Reformer (Task 2.1)

The goal of this task is to conduct laboratory tests to validate modeled predictions of the performance of TCR using recycled exhaust gas (rather than steam) mixed with fuel to recover waste heat and produce hydrogen-enriched fuel. Testing will be conducted for conditions simulating the Cummins QSK19G configured as a stoichiometric engine, spark-ignited (SESI) with exhaust gas recirculation (EGR), and a three-way catalyst (TWC).

The Contractor shall:

- Design, engineer, and fabricate a bench-scale recuperative reformer using recycled exhaust gas (REG) for SESI system conditions (hereafter referred to as REG/RR).
- Develop performance predictions for a TCR system using REG on QSK19G engine configured as SESI with EGR and TWC (hereafter referred to SESI system).
- Prepare a test plan to evaluate REG/RR for SESI system conditions in GTI combustion laboratory. The test plan shall include, but not be limited to:
- A description of the process to be tested;
- The rationale for why the tests are required;
- Predicted performance based on calculations or other analyses;
- Test objectives and technical approach;
- A test matrix showing the number of test conditions and replicated runs;
- A description of the facilities, equipment, instrumentation required to conduct the tests;
- A description of test procedures, including parameters to be controlled and how they will be controlled; parameters to be measured and instrumentation to measure them; calibration procedures to be used; recommended calibration interval; and maintenance of the test log;
- A description of the data analysis procedures;
- A description of quality assurance procedures;
- Contingency measures to be considered if the test objectives are not met.
- Submit said test plan to Commission Contract Project Manager for review and comments.
- Conduct said test of REG/RR in accordance with approved test plan.

A bench-scale recuperative reformer was designed, engineered, and fabricated for the experiments. The simulated engine exhaust gas composition was established to provide conditions comparable with the Cummins QSK19 SESI configuration. The exhaust gas temperature on the experimental rig was varied between 900°F -1560°F in order to reach reforming temperatures that would bracket the performance of TCR system and supply data that could be used in model validation. Pipeline natural gas mixed with the simulated engine exhaust gas provides the reactants for all reforming tests. A commercial Eclipse 4" Therm-Thief™ Bayonet-Ultra Recuperator was used as the heat exchanger for the recuperative reformer laboratory experiments. Removable catalytic inserts were fabricated and placed inside the recuperative reformer tubes. Two very different types of reforming catalytic insert materials were used in the tests. One consisted of ceramic discs with nickel (Ni) catalyst on their surface. The other one was made from corrugated metal foil which was coated with S43 Nickel-Rhodium (Ni-Rh) catalyst. The following parameters were monitored during all the tests:

- Temperature of the simulated engine exhaust gas entering the recuperative reformer,
- Inlet and outlet temperatures of the natural gas/engine exhaust mixture at the reformer,
- composition of simulated engine exhaust gas,
- composition of natural gas supplied to the reformer,
- composition of the reformed natural gas/exhaust gas mixture leaving the reformer,
- natural gas flow rate to reformer,
- flow-rate of exhaust gas mixed with natural gas prior to recuperative reformer.

The surface of the reforming catalyst inserts was visually inspected after each test run to determine if carbon was deposited on the surface.

A simplified flow diagram of the experimental set up is shown in Figure 2. Flue gas from a burner simulated engine exhaust and was controlled by natural gas/air flow ratio. The flue (exhaust) gas composition was measured using Horiba gas analyzer. Exhaust gas composition was specified to provide comparable conditions with Cummins QSK19 engine and maintained close to the following values (by volume):

- $CO_2 \approx 9.7\%$
- $H_2O \approx 18.5\%$
- $O_2 \approx 0\%$
- $N_2 \approx 71.8\%$.

The flue gas temperature was accurately controlled and maintained between levels ranging about 900°F -1600°F. The Cummins SESI exhaust gas temperature before the turbocharger is about 1300F. Line natural gas was used for reforming. Its composition was approximately the same during all tests. Typical values of the natural gas major components were (mole percent):

H_2=0.1%

CO_2=1.0%

N_2=1.1%

CH_4 (methane) = 94.9%

C_2H_6 (ethane) = 2.37%

C_3H_8 (propane) = 0.33%

i-C_4H_{10} (i-butane) = 0.05%

n-C_4H_{10} (n-butane) = 0.06%

i-C_5H_{12} (i-pentane) = 0.03%

n-C_5H_{12} (n-pentane) = 0.02%

C_6H_{14}+ (hexane plus) = 0.04%.

The lower heating value of the natural gas was 20,520 Btu/lb.

Figure 2: Simplified Flow Diagram for Natural Gas/Exhaust Gas Reforming

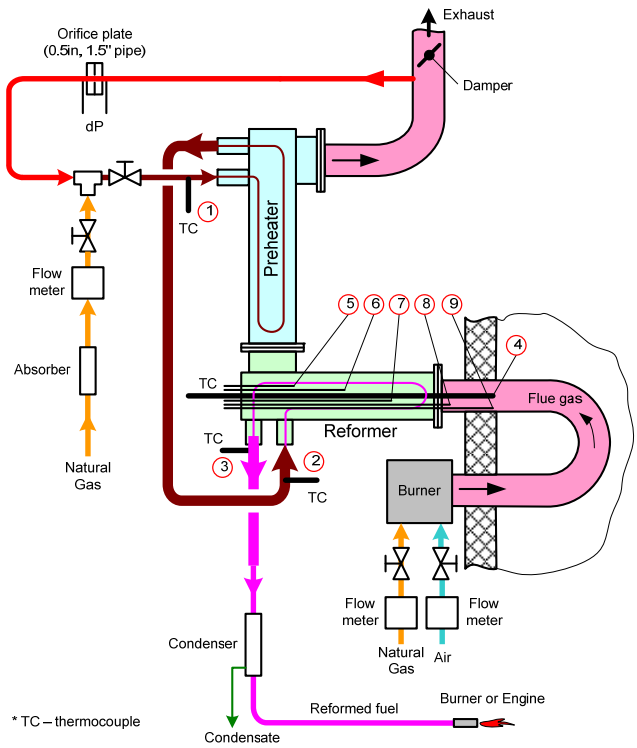

A photo picture of the TCR experimental rig is shown in Figure 3. A GTI heat treating furnace served as the platform for building the TCR experimental rig.

Figure 3: Experimental Rig for Exhaust Gas/Natural Gas Reforming

The commercial Eclipse 4″ Therm-Thief Bayonet-Ultra Recuperator used as the heat exchanger for testing TCR in these laboratory experiments is a tubular type heat exchanger with five heat exchange double tubes. Flow temperature profiles inside the recuperator would depend on the flow conditions (inlet temperature, flow rate) and reforming rate. Removable catalytic inserts were fabricated and placed inside the inner tubes (Figure 4). The access to these inserts was such that they could be inspected after each test in order to observe if carbon had deposited on the catalytic surface.

Figure 4: Heat Exchange Tube with Catalytic Insert Inside Inner Tube

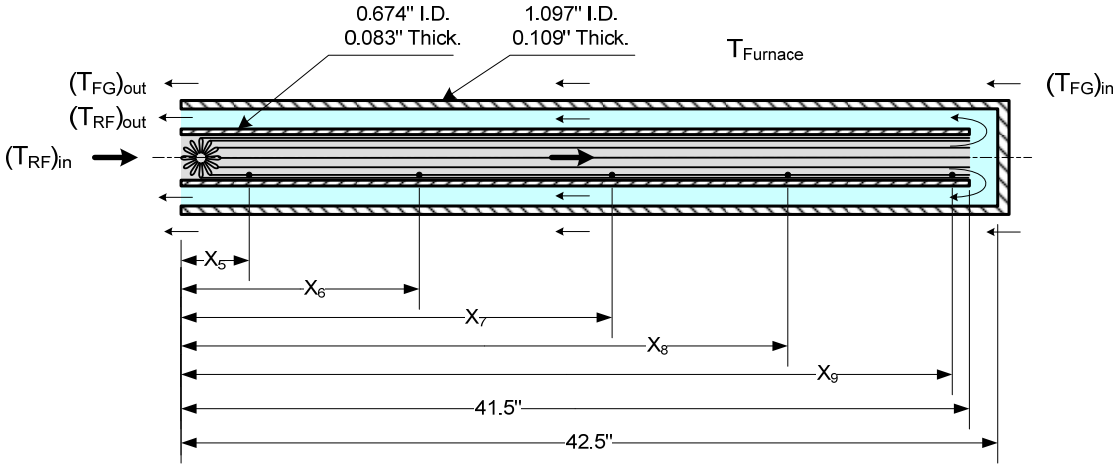

Two different types of catalytic inserts and materials were used in the tests. The first one consisted of ceramic discs with nickel catalyst on their surface (Figure 5-a). This catalyst is a commercial product used in natural gas/steam reforming for hydrogen production. Based upon published work (Tomishige K. et al. 1998) and engineering calculations, it was expected that nickel would be susceptible to carbon deposition at the experimental design conditions. Accordingly, it was tested first to establish a preliminary indication of how sensitive carbon deposition might be to fraction of exhaust gas recirculation fraction mixed with natural gas. The second catalytic insert tested was made from corrugated metal foil which was coated with S43 Ni-Rh catalyst (Figure 5-b). This is a custom catalyst which was fabricated for GTI by Catacel Corporation of Ohio.

Figure 5: Catalytic Inserts

a)

b)

The Nickel-Rhodium catalyst provided better resistance to coking. It showed no visible carbon deposition on the catalyst surface at Cummins QSK19 engine desired operating condition where EGR mass fraction is ~35 percent. The experimental results were used to develop a chemical kinetic model and verify computational results obtained by CFD FLUENT and Aspen HYSYS software. Although test results were favorable at ~35 percent EGR mass fraction, it was decided to perform additional longer-term tests to evaluate the potential for carbon deposition at conditions that simulate lower EGR fractions (26-35 percent).

3.1.2 Pilot Scale TCR System Development (Task 2.2)

The goal of this task is to design, engineer, fabricate, and test a pilot-scale TCR system integrated with a 50-75 kWe reciprocating engine. Test results will be used to validate predictions of performance and to refine the engineering design model for subsequent scale up to a 331 kWe engine.

The Contractor shall:

- Design, engineer, and fabricate pilot-scale TCR system for integration to pilot-scale engine at GTI.
- Develop performance predictions of the selected TCR system for pilot-scale development and testing.
- Prepare a test plan to evaluate pilot-scale TCR system at GTI laboratories. The test plan shall include, but not be limited to:
    - A description of the process to be tested;

    - The rationale for why the tests are required;
    - Predicted performance based on calculations or other analyses;
    - Test objectives and technical approach;
    - A test matrix showing the number of test conditions and replicated runs;
    - A description of the facilities, equipment, instrumentation required to conduct the tests;
    - A description of test procedures, including parameters to be controlled and how they will be controlled; parameters to be measured and instrumentation to measure them; calibration procedures to be used; recommended calibration interval; and maintenance of the test log;
    - A description of the data analysis procedures;
    - A description of quality assurance procedures;
    - Contingency measures to be considered if the test objectives are not met.
- Submit test plan for pilot-scale TCR system to the Energy Commission Contract Project Manager for review and comments.
- Conduct test of pilot-scale TCR system in accordance with approved test plan.

Based upon results from CFD modeling, a preferred design for a pilot-scale TCR system was selected. Computational analysis of the TCR system indicated that in order to realize the target energy gain, the natural gas should be preheated prior to mixing it with EGR. Preheating the natural gas with engine exhaust would increase recuperation of waste heat and thereby increase the TCR system efficiency. Modeling analysis suggested that the natural gas pre-heater should be installed after the reformer.

A simplified flow diagram of one of the tubular recuperative reformer arrangements studied and details for one tube are shown in Figures 6 and 7, respectively. The CFD modeling indicated that there should be 4 tubes (sections) in the reformer in order to satisfy a design space velocity of 3500 1/hr for the catalytic reforming section. This space velocity was recommended by Catacel.

Figure 6: Flow Diagram of the Tubular Recuperative Reformer with Tubes in Series

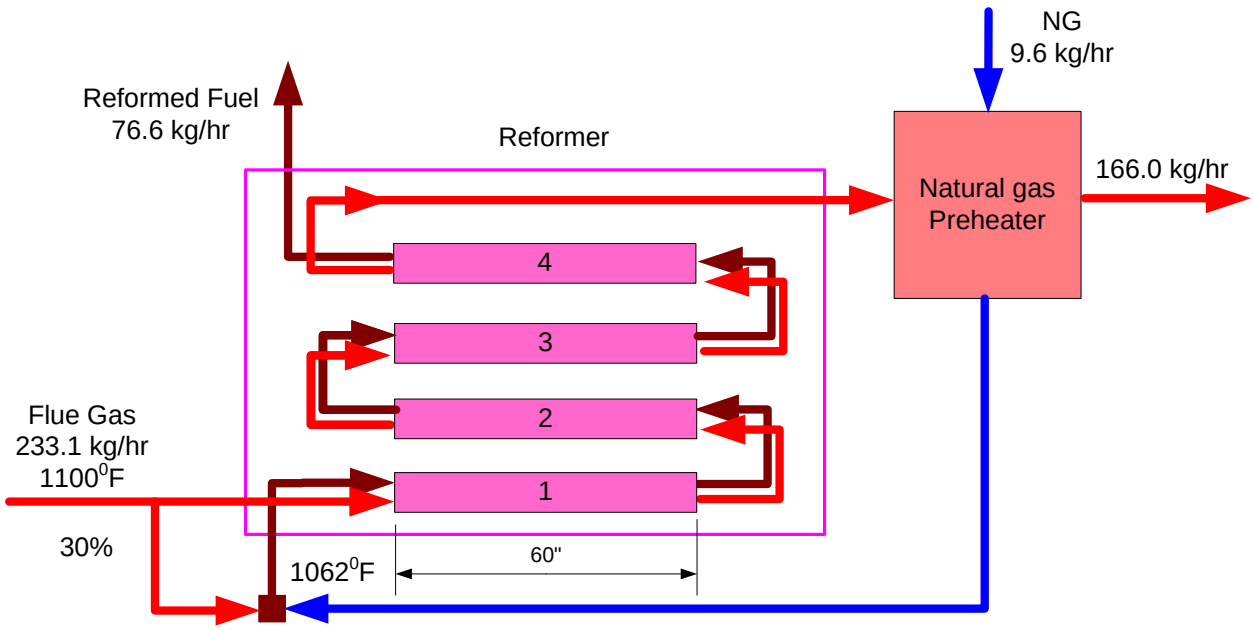

Figure 7: Flow Diagram in Single Recuperative Reformer Tube

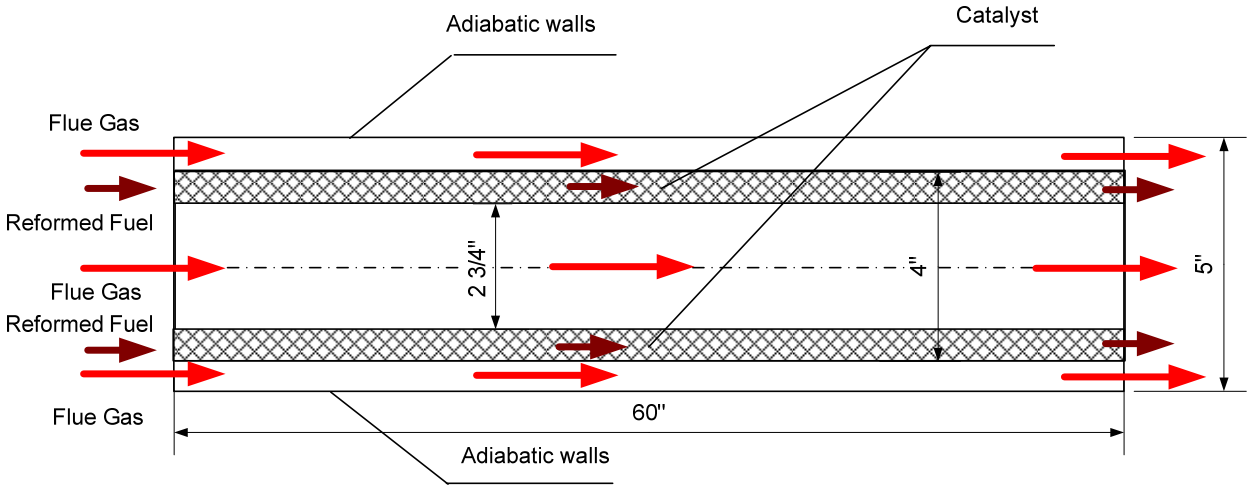

An isometric drawing of the pilot-scale tubular reformer design selected for testing on the GTI 50 kWe research engine is shown schematically in Figure 8. The reformer consists of four tubular units connected in two parallel flow passes. There are three concentric tubes in each unit, and catalytic inserts are placed between inner and central tubes. The exhaust gas/natural gas mixture (to be reformed) flows through the annulus of catalytic inserts. The catalytic insert has been made of a corrugated foil with a coating of Ni-Rh catalyst on the foil. The engine

exhaust gas flows inside the inner tube and in the gap between outer and central tubes with approximately equal flow rates.

Figure 8: Schematic of Pilot-Scale TCR Experimental Unit for GTI Research Engine

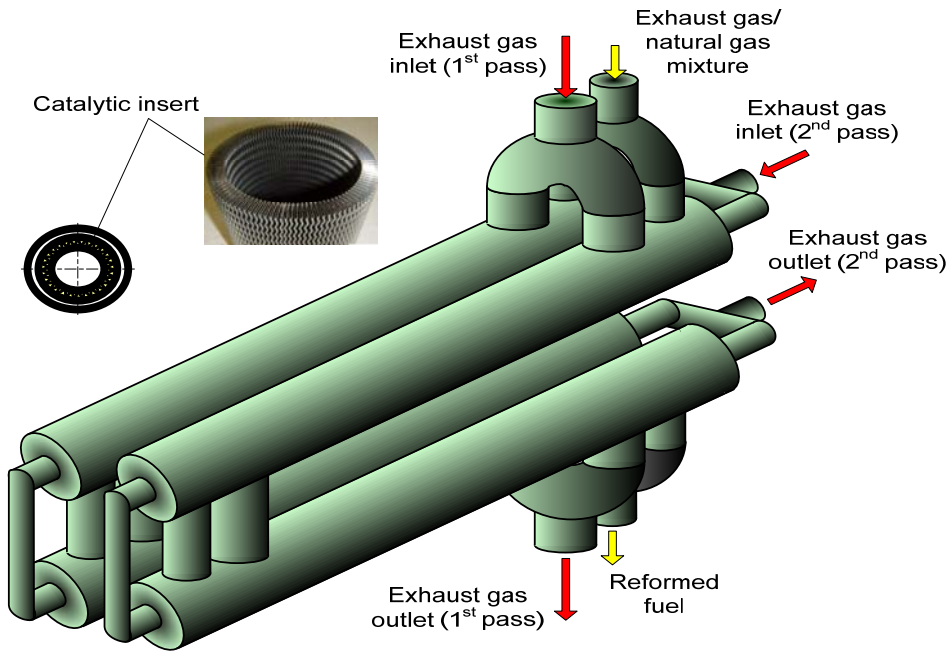

Detailed shop design drawings of the tubular reformer were prepared for fabricators. The assembly drawing is shown in Figure 9.

Figure 9: Assembly Drawing of the Tubular Reformer

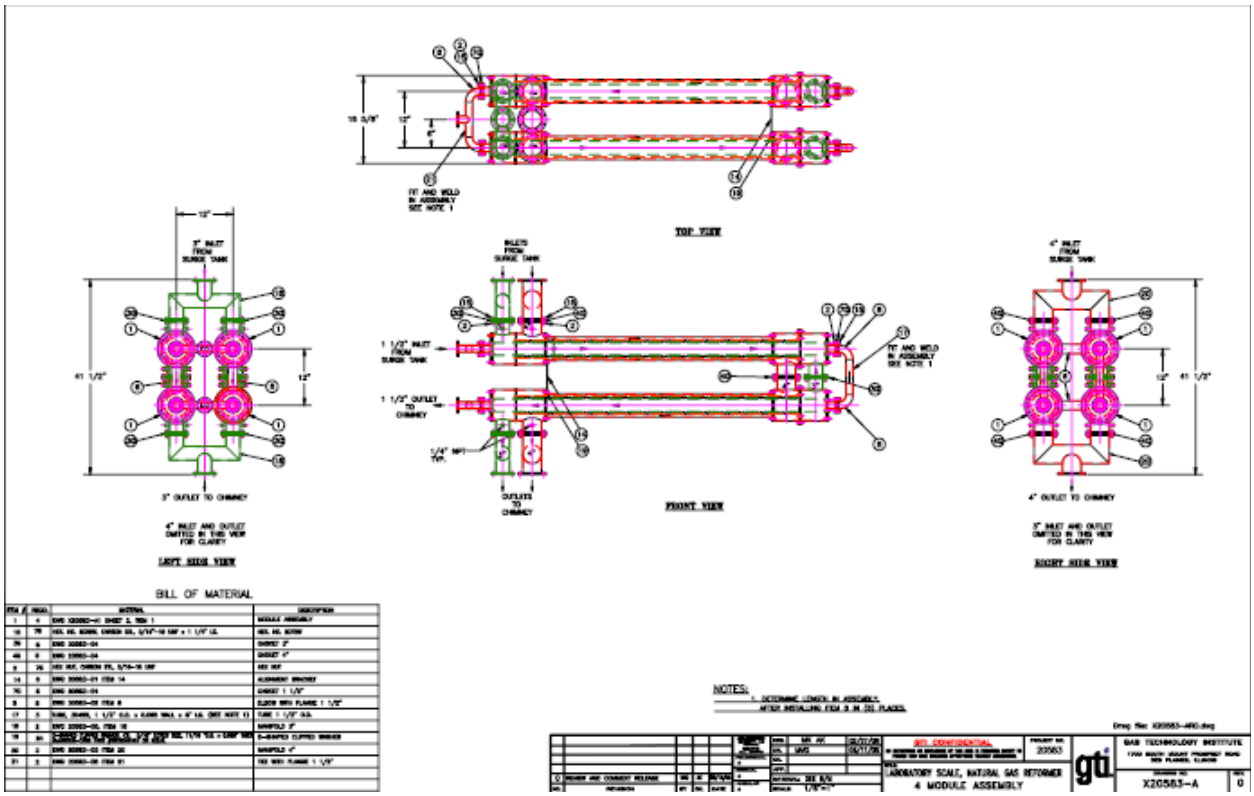

This tubular reformer design allows relatively easy opening to inspect the catalyst after testing. It also affords a flexible means for modifying the equipment arrangement, if necessary. For example, the catalytic inserts can be partially installed in one, two, or three tubes thus simulating different space velocities. In this case, the other heat exchange tubes without catalyst can be used for heat transfer only. These tubes (without catalyst) can be also removed from the unit, and then the catalytic tubes would be used for testing. Photographs of the shop-fabricated, pilot-scale recuperative reformer prior to shipping to GTI are provided in Figure 10 and Figure 11.

Figure 10: End View of Pilot Scale Recuperative Reformer for 50 kWe Engine

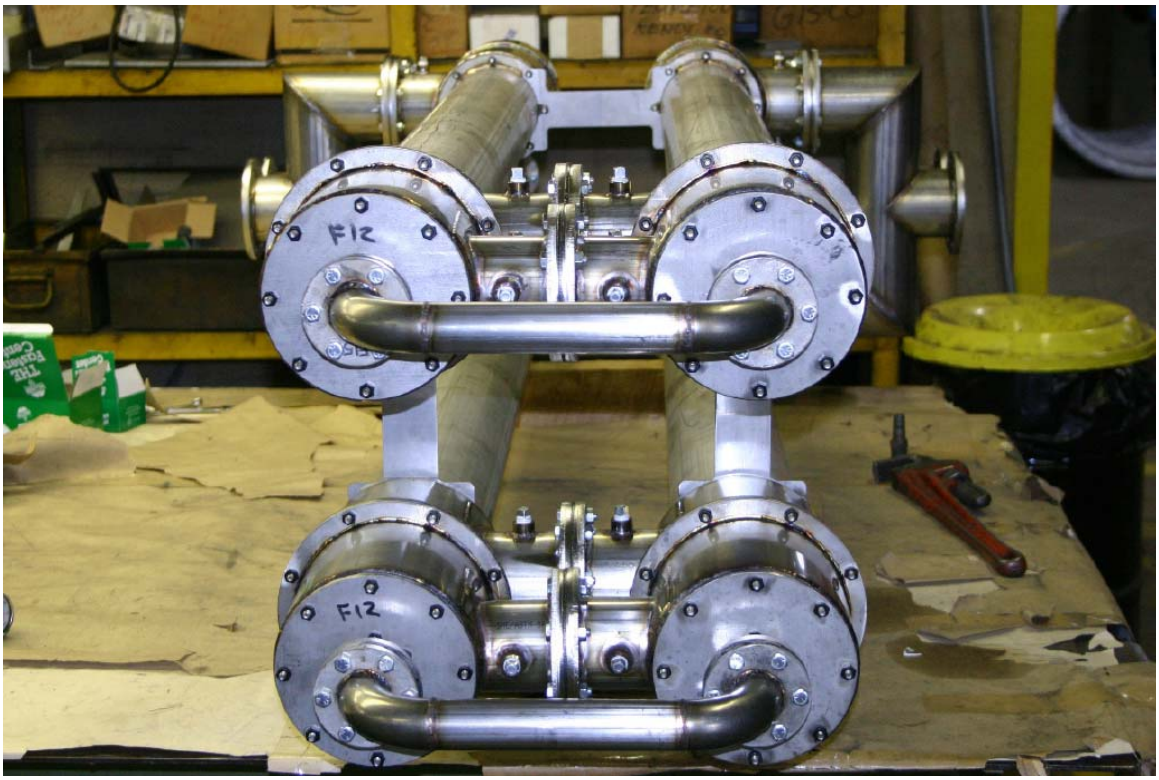

Figure 11: End View of RR Showing Intake and Exhaust Ports

3.1.3 Reforming Catalyst for Pilot-Scale TCR System

Findings from Task 2.1 tests confirmed that, for the design conditions of the pilot-scale TCRS, there was a potential for carbon deposition if the ratio of engine exhaust gas mixed with natural gas (supplied to the catalytic recuperative reformer) fell below a certain level. This is expected because there are minimum requirements of water (at specific temperature) that must be supplied to the steam reforming reaction to suppress carbon formation. As stated earlier, water vapor is found in the engine exhaust.

To minimize this potential carbon formation with the Catacel catalytic inserts that would be used for the pilot-scale and full-scale TCRS evaluations, the Project team developed a plan for controlled testing of Catacel reforming catalyst formulations to determine which one demonstrated the greatest potential to avoid coking from carbon deposition (within the expected range of reforming temperatures and exhaust gas/natural gas flow rates).

Catacel Corp. proposed a preliminary test matrix to evaluate the catalytic performance in Catacel's laboratory scale Reforming Reactor I (RR-I). The detailed report for this testing is provided in the Appendix (Section 6.2) of the Interim Report for Task 2.2, previously submitted to the Energy Commission under this project.

It was decided to screen three different compositions of reforming catalysts, Gcat-1 to Gcat-3 while maintaining process variables (exhaust to natural gas fuel ratio, gas hourly space velocity (GHSV) and reaction temperature) constant. Continuous run time of 100 hours was selected for determining the optimum formulation. Table 5 shows the process conditions that Catacel evaluated for three catalyst candidates.

Table 5: Process Conditions to Test Catalyst Stability for ~100 Hour Run

Reactor	**RR-I**		
Catalyst ID	Gcat-1	Gcat-2	Gcat-3
Catalyst active volume, in3	1.475	1.475	1.475
$F_{CH4-CO2}$, SLPM	0.313	0.313	0.313
$F_{exhaust\ mix}$, SLPM	0.898	0.898	0.898
F_{water}, SLPM	0.199	0.199	0.199
F_{total}, SLPM	1.410	1.410	1.410
$F_{CH4-CO2}$, mol/min	0.013	0.013	0.013
$F_{exhaust\ mix}$, mol/min	0.037	0.037	0.037
F_{water}, mol/min	0.008	0.008	0.008
EG/NG mass ratio	4.540	4.540	4.540
Exhaust/NG Fuel Ratio	3.5	3.5	3.5
F_{total}, ft3/hr	2.990	2.990	2.990
GHSV, 1/hr	3503	3503	3503
Catalyst Bed T, °C	510	510	510
Run time, hrs	100	100	100

After testing Gcat-1 to Gcat-3 catalysts, Catacel optimized the formulation based on performance results and synthesized Gcat-4 catalyst to do temperature and flow rate sweeps. Gcat-4 was tested with one specific flow rate, for example flow rate gas-mix = 2.42SLPM; flow rate water = 0.399 SLPM, for ~55 hours whereas catalyst bed temperature was varied from 427°C to 593°C to measure the influence of temperature on the performance. Based upon results of the test campaign, Catacel Gcat-4 (Nickel-Rhodium) catalytic inserts were chosen to be used with the pilot-scale reformer. At the recommendation of Catacel, a space velocity of ~3500 1/hr was also established as the design basis for the catalytic section of the recuperative reformer.

A schematic diagram of the pilot-scale engine experimental rig is shown in Figure 12. The GTI research engine test center includes the following major subsystems relevant for this project:

- Natural gas capability
- Spark ignition test capability
- AVL LEF / VOLVO 5312 single-cylinder engine

  Bore 131mm, Stroke 150 mm

  Variable speed
- AVL portable engine coolant and lube oil conditioning system
- MTS AC dynamometer
- MTS Redline data acquisition and control system
- MTS combustion analysis system
- Emissions measurement system
- Horiba MEXA-7000FC gaseous emissions analyzers.

In order to complete this task, the natural gas capability in the spark ignition configuration had to be brought on-line. Additionally, a cooled exhaust gas recirculation system had to be designed, fabricated and installed on the research engine. Digital Engines, LLC supported GTI in these endeavors. Photographs and descriptions are provided later in this report.

The TCR system proposed for testing included the following main components which needed to be added to the GTI 50 kWe research engine test bench: catalytic recuperative reformer integrated with cooled EGR loop, and air/ natural gas or reformed fuel mixer. Two new electrical heaters were installed to precisely control (for testing purposes) the temperature of the exhaust gas/natural gas mixture entering the recuperative reformer. This provision was required to compensate for heat losses.

Figure 12: Schematic Diagram of the Pilot-Scale Engine/TCR System Experimental Rig

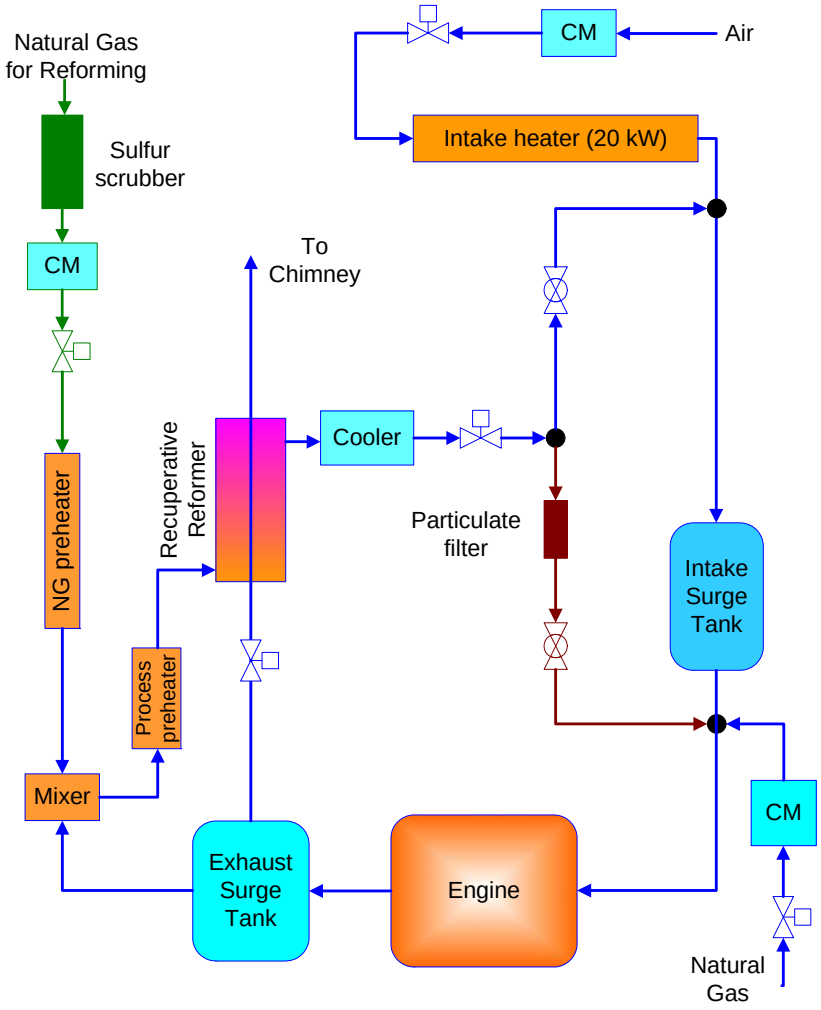

The research engine was configured for spark-ignition and operated near stoichiometric (lambda=1.0) with a cooled EGR system. The cooled EGR system is shown on top of the engine test stand in Figure 13 below. When operating the TCR system, some portion of the exhaust gas is mixed with preheated natural gas and the mixture is partially reformed in the recuperative reformer. The reforming reaction is endothermic (with heat absorption) and therefore must be supported by heat from the engine exhaust gas. In this way, waste thermal energy from the engine exhaust gas is partially recuperated and transferred to the chemical energy of the fuel mixture leaving the recuperative reformer. The hydrogen-enriched reformed fuel, with increased heating value, produced in the reformer is then cooled before it is mixed with air and combusted in the engine. Figure 14 shows the pilot-scale TCR system being installed on the GTI 50 kWe test engine.

Figure 13: GTI 50 kWe Engine Test Stand with Cooled EGR System Installed

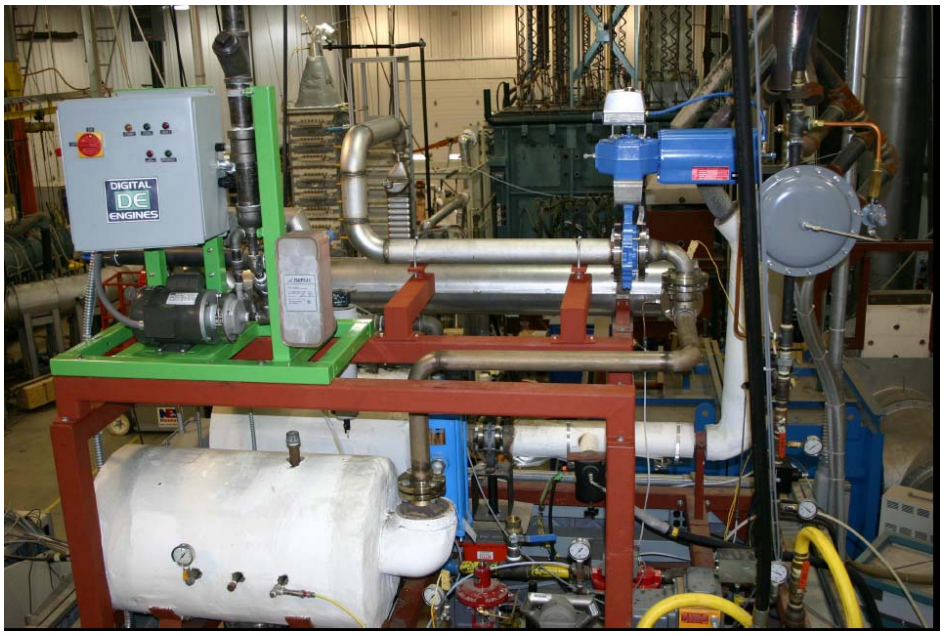

Figure 14: Four-Tube Pilot-Scale Recuperative Reformer Being Installed on the GTI 50 kWe Engine Test Stand

3.1.4 Development of Full-Scale TCR System for 331 kWe Engine (Task 2.3)

The goal of this task is to design, engineer, and fabricate a skid-mounted, TCR system that can be integrated with a Cummins QSK19G engine configured with SESI, EGR, and TWC. It will be located in a Cummins test cell in Columbus, Indiana. The TCR system will be built to commercial codes and standards and will be instrumented to obtain critical measurements of temperatures, flows, pressures and composition of reformed fuel. Any necessary controls will be included with the package.

The Contractor shall:

- Design, engineer, and fabricate a TCR system for integration with a QSK19G engine at Cummins test cell.
- Develop performance predictions of the TCR system for QSK19G engine.
- Submit test plan for 331kWe TCR system to Commission Contract Project Manager for review and comments.
- Conduct test of 331 kWe TCR system in accordance with approved test plan.
- Submit an interim report on the performance of the TCR system for a 331 kWe reciprocating engine. The report shall include, but not be limited to:
    - The test plan;
    - Test results;
    - Analysis;
    - Conclusions;
    - Photographs as appropriate

Approach

Performance predictions of the 331 kWe TCRS were based on the test results for single tube with catalyst and 50 kW engine TCRS as well as theoretical simulation of the TCRS. Theoretical simulation of the 331 kWe TCRS was done by calculating heat transfer and reforming reactions in the recuperative reformer of the TCRS. One-dimensional stationary model of the heat transfer and chemical reactions was used for that. An Excel spreadsheet was developed to simulate the heat transfer and chemical processes in the recuperative reformer. Chemical reactions were estimated by Aspen HYSYS 2006.5 version software, the results of the calculations were approximated, and approximation equations were used in the Excel program. In the model it was assumed that the chemical reactions rates depend on the reforming fuel composition, temperature, and pressure only. Data for the reactions completeness were taken from the test results for reformer single tube and 50 kW engine TCRS.

The TCRS for 331 kWe engine was simulated at different initial conditions. Given parameters at the calculations were exhaust gas temperature after TWC, exhaust gas/natural mixture temperature before the reformer, and EGR mass fraction. Calculated parameters of the TCRS were the reformed fuel temperature and composition, exhaust gas temperature after the

reformer, mean reforming temperature, and TCRS energy ratio. Mean reforming temperature was estimated as the temperature that corresponds to isothermal equilibrium conditions at the recuperative reformer outlet. The calculated results were approximated with polynomial equations to be used for the 331 kWe engine TCRS testing and operation.

3.2 Development of QSK19G Engine and After-Treatment System for Hydrogen-Enriched Fuel (Task 3)

3.2.1 Generate Project Work Plan for QSK19G Engine Development, Optimization, and Integration with TCR System (Task 3.1)

The goal of this task is to prepare the overall work plan for the QSK19G development portion of the project. This plan will facilitate timely, efficient and effective integration with the TCR system development and validation test.

The Contractor shall:

Generate an updated work plan for QSK19G development that includes listing of activities and corresponding schedules to:

- Equip the existing test cell with provision to supply and meter the blending of hydrogen to the existing pipeline natural gas delivered to QSK19G test cell.
- Develop preliminary test plans for Subtasks 3.2, 3.4, 4.1, and 4.2.
- Plan the procurement of necessary engine and after treatment components to carry out the project work scope.
- Submit a work plan for QSK19G development and testing with hydrogen-enriched natural gas.

Rationale for Why Hydrogen Enriched Natural Gas Tests and Data are Required

Successful utilization of hydrogen enriched gaseous fuels in reciprocating internal combustion engines requires thorough understanding of the combustion properties that result from such blends. The literature is rich with reported results. However, the quantitative response of any given engine is heavily dependent upon the specific characteristics of each test engine. Different responses in terms of heat release rate, dilution tolerance, and incipient knock limits are dependent upon specific engine design parameters, such as: compression ratio, inlet port swirl ratio, bore to stroke ratio, absolute bore size, squish and swirl induced turbulence levels, combustion chamber shape, spark plug type and location within the combustion space, inlet and exhaust valve opening and closing angles, and so forth. Thus, although estimates of the impact of adding hydrogen in various amounts can be made, only direct testing of a particular engine can provide the required quantitative information to verify and certify the suitability of any given design to fulfill a specific product profile.

The goals of this program are very aggressive in terms of power density, brake thermal efficiency (BTE), system out emissions, and durability. It is thus mandatory that exploratory data be obtained under representative speed, load, EGR fraction, and hydrogen to natural gas blend ratio on the specific engine platform to be used in order to establish a baseline and generate pedigree combustion characterizing data. The pedigree data so obtained will be utilized to update existing in-cylinder computational fluid dynamics (CFD) and well as cycle simulation codes to enable engine and after treatment system optimization to enable best utilization of hydrogen as a spark ignition engine fuel additive.

Description of Facilities, Equipment, and Instrumentation Required to Conduct Tests

The facilities, equipment, and instrumentation that will be utilized to conduct this testing are contained in the Cummins Technical Center (CTC) located in Columbus, Indiana. This work will take place in a steady-state performance development test cell. A complete test system that was developed to conduct U.S. DOE ARES testing will be utilized and enhanced to conduct Task 3.2 work.

The steady-state test cell is equipped with a bed plate, dynamometer, test cell ventilation and fire suppression systems, temperature controlled engine combustion air supply system, natural gas supply system, propane fuel blending system, engine coolant temperature control system, cooled EGR supply system, a comprehensive instrumentation connection and conditioning system, a high speed crankshaft synchronous data acquisition system (HSDA), a cooling system for in-cylinder (6) and intake/exhaust manifold (2) pressure transducers, provision for measurement of five exhaust gas species (O_2, NOx, CO, CO_2, THC), intake CO_2, a Fourier transform infra-red (FTIR) exhaust gas speciation system (as needed for TWC after treatment performance characterization), a proprietary Cummins rapid prototype controls (CRPT) development system, and isolated operator's control console area, and a combination automated data acquisition and test control system (Automated System Software for Engine Testing or ASSET system).

A new hydrogen blend system will be designed, procured, installed, integrated, and commissioned. The system will consist of an external source of compressed hydrogen gas as well as a hydrogen metering and blending system that will be located within the test cell. Figure 15 below depicts a schematic of the proposed hydrogen supply, metering, and blending system.

Figure 15: Hydrogen Blending System for QSK19L Engine Test Cell

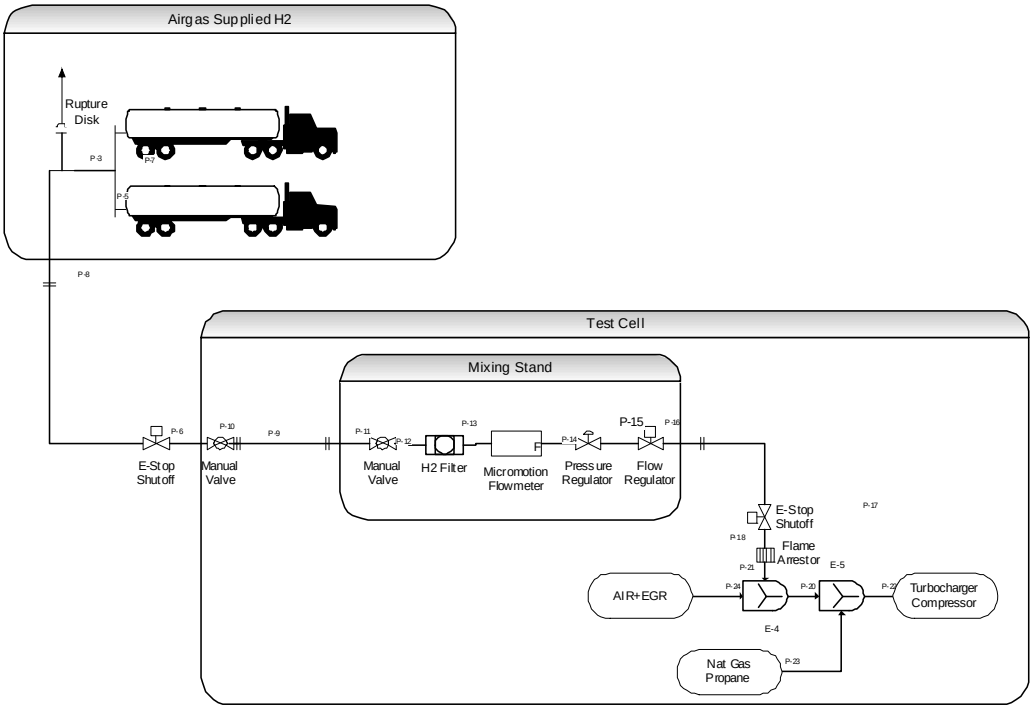

The engine to be used for this work is a Cummins 19L gaseous fueled engine that has been enhanced to suitably conduct the Scope of Work (SOW) proposed for this program. The engine and EGR system are depicted in Figure 16.

Figure 16: Flow Diagram for QSK19L Engine and EGR System

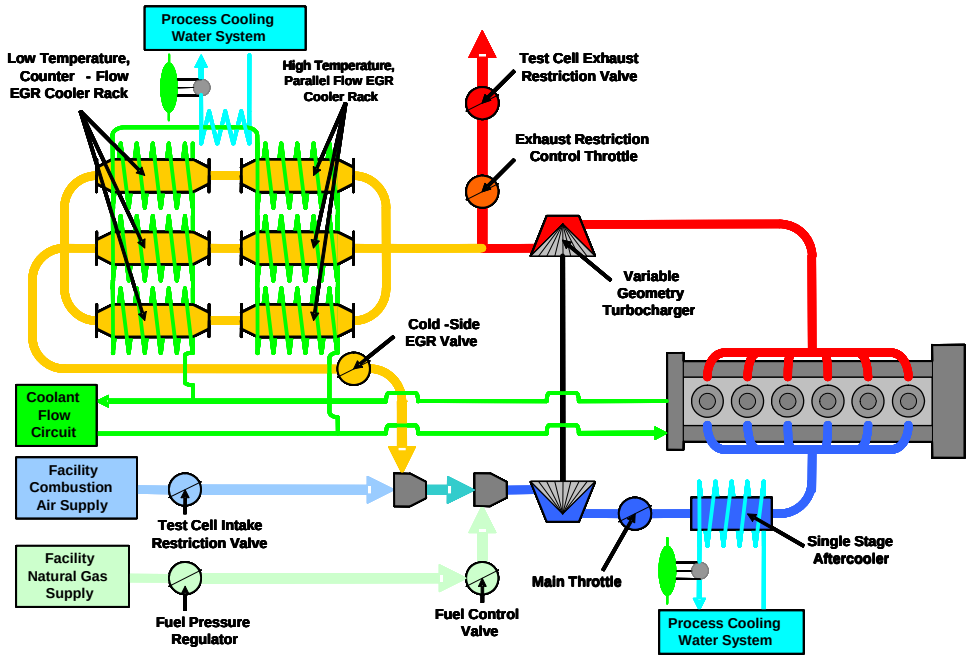

The instrumentation employed is capable of executing the statement of work. Appropriate pressure, temperature, engine speed, dynamometer reaction torque, turbocharger speed, air flow, natural gas flow, propane flow, hydrogen flow, in-cylinder pressure, crankshaft position, gaseous emissions, and position transducers are used.

3.2.2 Test Matrix Showing the Number of Test Conditions and Replicated Runs

The test program will be executed in steps to insure gradual familiarization with the properties of the hydrogen with natural gas fuel blends.

The first step will be to verify robustness of the engine and test system by conducting initial testing using pipeline natural gas only as the fuel. A representative Design of Experiments test sequence is shown in Table 6.

Table 6: Design of Experiments Test Sequence for QSK19L Engine

Optimization Test Matrix Acquisition Order -- 3D Cube									
		Spd:	**1200**	rpm	Load:	**2000**	ft-lb	HP:	**457**
4 factor face-centered									
LEVER		Level					**<< INPUT >>**		**UNIT**
		Star	Corner	Center	Corner	Star			
Lever#	Lever	-1.000	-1.000	0.000	1.000	1.000	Min	Max	Unit
1	**Throttle Position**	65.0	65.0	70.0	75.0	75.0	**65.0**	**75.0**	**%**
2	**Ignition Timing**	10.0	10.0	15.0	20.0	20.0	**10.0**	**20.0**	**deg BTDC**
3	**Lambda**	1.0	1.0	1.0	1.0	1.0	**0.96**	**1.04**	**(-)**
4	**EGR Fraction**	22.0	22.0	24.0	26.0	26.0	**22.0**	**26.0**	**(-)**
Index				2	3	4	5		
Randomized Run Order (For Vrbls File)									
Cube Pos #	**Run in Order**	**Speed**	**Torque**	**Throttle Position**	**Ignition Timing**	**Lambda**	**EGR Fraction**	**Pam Point(s)**	
21	1	1200	2000	70.00	15.00	0.96	24.00		
12	2	1200	2000	75.00	20.00	0.96	26.00		
2	3	1200	2000	75.00	10.00	0.96	22.00		
20	4	1200	2000	70.00	20.00	1.00	24.00		
25	5	1200	2000	70.00	15.00	1.00	24.00		
8	6	1200	2000	75.00	20.00	1.04	22.00		
5	7	1200	2000	65.00	10.00	1.04	22.00		
13	8	1200	2000	65.00	10.00	1.04	26.00		
24	9	1200	2000	70.00	15.00	1.00	26.00		
7	10	1200	2000	65.00	20.00	1.04	22.00		
19	11	1200	2000	70.00	10.00	1.00	24.00		
4	12	1200	2000	75.00	20.00	0.96	22.00		
1	13	1200	2000	65.00	10.00	0.96	22.00		
27	14	1200	2000	70.00	15.00	1.00	24.00		
6	15	1200	2000	75.00	10.00	1.04	22.00		
17	16	1200	2000	65.00	15.00	1.00	24.00		
14	17	1200	2000	75.00	10.00	1.04	26.00		
18	18	1200	2000	75.00	15.00	1.00	24.00		
3	19	1200	2000	65.00	20.00	0.96	22.00		
11	20	1200	2000	65.00	20.00	0.96	26.00		
16	21	1200	2000	75.00	20.00	1.04	26.00		
15	22	1200	2000	65.00	20.00	1.04	26.00		
9	23	1200	2000	65.00	10.00	0.96	26.00		
23	24	1200	2000	70.00	15.00	1.00	22.00		
10	25	1200	2000	75.00	10.00	0.96	26.00		
22	26	1200	2000	70.00	15.00	1.04	24.00		
26	27	1200	2000	70.00	15.00	1.00	24.00		

The center points of the CAP are repeated three times to enable capture of any test system "drift" over the course of the test sequence.

Prior to execution of any test sequence, initial daily "check points" are obtained to verify proper overall operation of the test system. This determines if any problems have arisen with transducers, engine components, control loops (for example, engine coolant temperature, EGR fraction, after cooler outlet temperature, and so forth), emissions analyzers, and so forth.

After the initial verification that test system performance is as expected using pipeline natural gas, the next test sequence will be with a hydrogen / natural gas blend having a low fraction of hydrogen (~1 percent). The blend ratio will be held constant and a repeat of the above test matrix, using suitable ranges of the CAP as determined by preliminary "exploratory" test points, will be conducted.

The CFR will be generated as a function of the CAP at the ~1 percent hydrogen blend rate and quantitatively compared with the CFR with baseline natural gas only.

Additional test sequences will be conducted with successively higher hydrogen blend rate fractions in increments of ~1 percent until the blend rate is a maximum of approximately 6 percent. Thus, a matrix of U. S. DOE tests will be conducted with hydrogen blend rates of 0 percent, 1 percent, 2 percent, 3 percent, 4 percent, 5 percent, and 6 percent.

Each successive test matrix will enable comparison for CFR at an increasing hydrogen blend rate. This will identify if an "optimal" hydrogen blend rate exists. It will also enable quantification of engine exhaust gas composition as a function of hydrogen blend rate (and associated EGR fraction increase) that is critical for determining optimal TWC formulation.

Contingency Measures to be Considered if the Test Objectives are Not Met

Several potential unknowns exist which may require modification of the existing plan to achieve program objectives. Among these are:

- Combustion stability limit using hydrogen blended fuel at sufficiently high EGR fraction to obtain required power density and margin against knock may prove unacceptable. If combustion stability as EGR is increased deteriorates faster than heat release rate can be accelerated with hydrogen addition for adequate knock margin then the entire stoichiometric/TWC/exhaust gas reforming TCR approach may need to be abandoned in favor of a lean burn/SCR/steam reforming TCR approach to achieve program goals. Only detailed testing will provide the necessary information to resolve this issue.
- It may prove impossible to obtain an adequate TWC formulation to cope with the composition of the exhaust gas at high levels of EGR and hydrogen blend fraction. Again, this may require a change from stoichiometric/TWC/exhaust gas reforming TCR to a lean burn/SCR/steam reforming TCR approach.

- The performance of the exhaust gas reforming TCR in the "real" engine environment may not be adequate to achieve program goals. This may arise from factors affecting engine performance with high EGR levels and hydrogen blend ratios. For example, turbine outlet temperature may be too low to provide adequate TCR performance.

3.2.3 Hydrogen Enrichment Testing of Baseline QSK19G Engine Under Stoichiometric Conditions (Task 3.2)

The goal of this task is to map the QSK19G engine with blends of hydrogen and natural gas to evaluate the performance and emissions characteristics. Testing is to be performed under fuel to air ratio conditions that enable the use of a TWC. The technical approach includes:

- Evaluating the existing QSK19G engine under a sufficient number of operating conditions to fully quantify the performance and emissions impacts of hydrogen fuel enrichment of pipeline natural gas.
- Conducting testing that included:
    - Varying fractions of hydrogen fuel in the natural gas,
    - Varying fractions of EGR,
    - Varying ignition timing,
    - Varying speed and load conditions. The goal is to minimize speed and maximize load to maximize brake thermal efficiency.
- Utilizing existing test cell capabilities including:
    - Operating natural gas fueled QSK19G engine/dynamometer system;
    - EGR cooling and mixing system;
    - Advanced control prototyping system;
    - Sensors and controls required to maintain stoichiometric conditions;
    - Combustion quality sensing in all 6-engine cylinders;
    - Cylinder by cylinder combustion optimization features in advanced control system;
    - Emissions measurement equipment that includes intake CO2, exhaust gas (O2, CO, CO2, Total Hydrocarbon, NOx), as well as Fourier Transform Infrared (FTIR) speciation of exhaust gas;
    - Provision to install and characterize TWC conversion efficiency (FTIR analysis on catalyst inlet and outlet gases);
    - Automated unattended test sequences for design of experiments based optimization.

The data collected as part of Task 3.2 took place at Cummins Technical Center (CTC) in Columbus, IN. To accommodate the testing with a hydrogen rich fuel stream, a fuel delivery system was installed in Test Cell (TC) 422 to mix hydrogen with the fuel and air charge before going through the compressor of the turbocharger. (See Figure 17) This data was collected on Cummins 19L Natural Gas Engine. The specific engine configuration can be seen in Table 7. A picture of the Engine and Low Pressure Loop EGR System can be seen in Figures 18 and 19. A description of the low pressure EGR system can be seen in Appendix A. The EGR system depicted in Figure 2 is a laboratory device used for testing and development purposes only. The intended production unit will be much more compact and directly attached to the engine.

Figure 17: Hydrogen Metering Stand for QSK19L Engine Test Cell

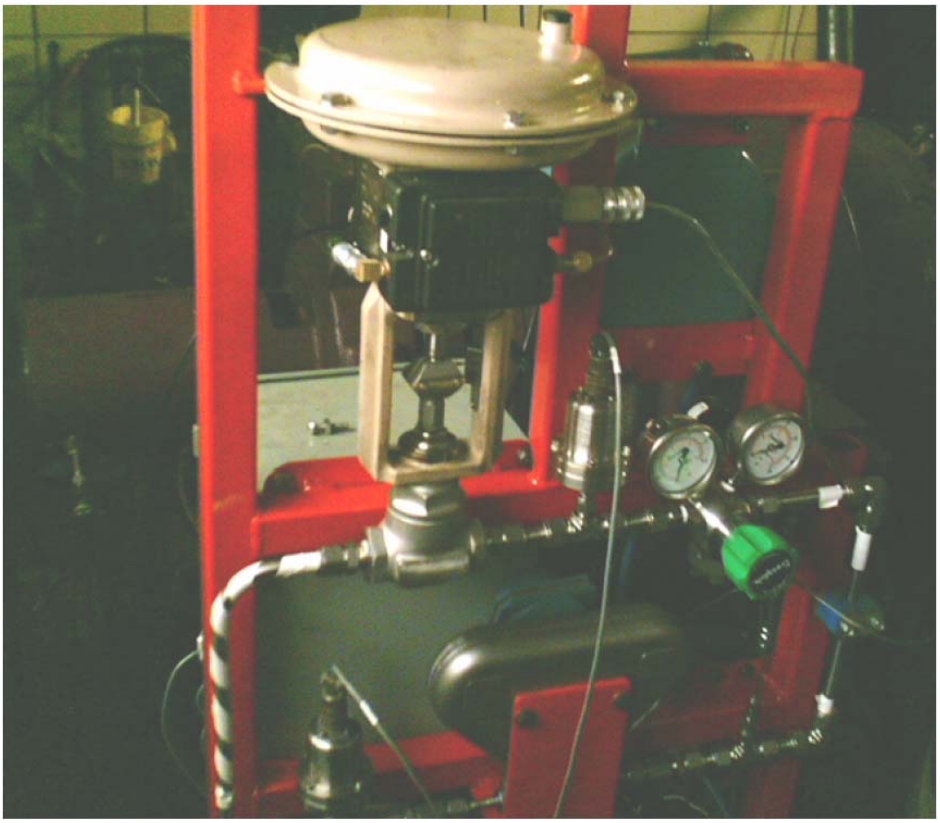

Table 7: Engine Configuration

Engine Parameter	Description
Engine Configuration	Inline 6
Ignition Type	Spark Ignition
Engine Type	4 Cycle
Displacement	19Liter
Compression Ratio	11.6:1
Bore	6.25 Inches
Stroke	6.25 Inches
Connecting Rod Length	11.406 Inches
Emissions Control Strategy	Low Pressure EGR, Stoichiometric Operation, TWC
Swirl Ratio	3.4 DCS
Turbocharger	Variable Geometry Turbine HE551V
Compressor	D108N66RAH
Turbine	A86E93SE31RX-V12B
Charge Cooler	Jacket Water After Cooled
Camshaft	0 deg =TDC Compression
EVO	126 CAdegATDC Compression
EVC	-320 CAdegATDC Compression
IVO	-342 CAdegATDC Compression
IVC	-136 CAdegATDC Compression

Figure 18: Engine and Low Pressure Loop EGR System

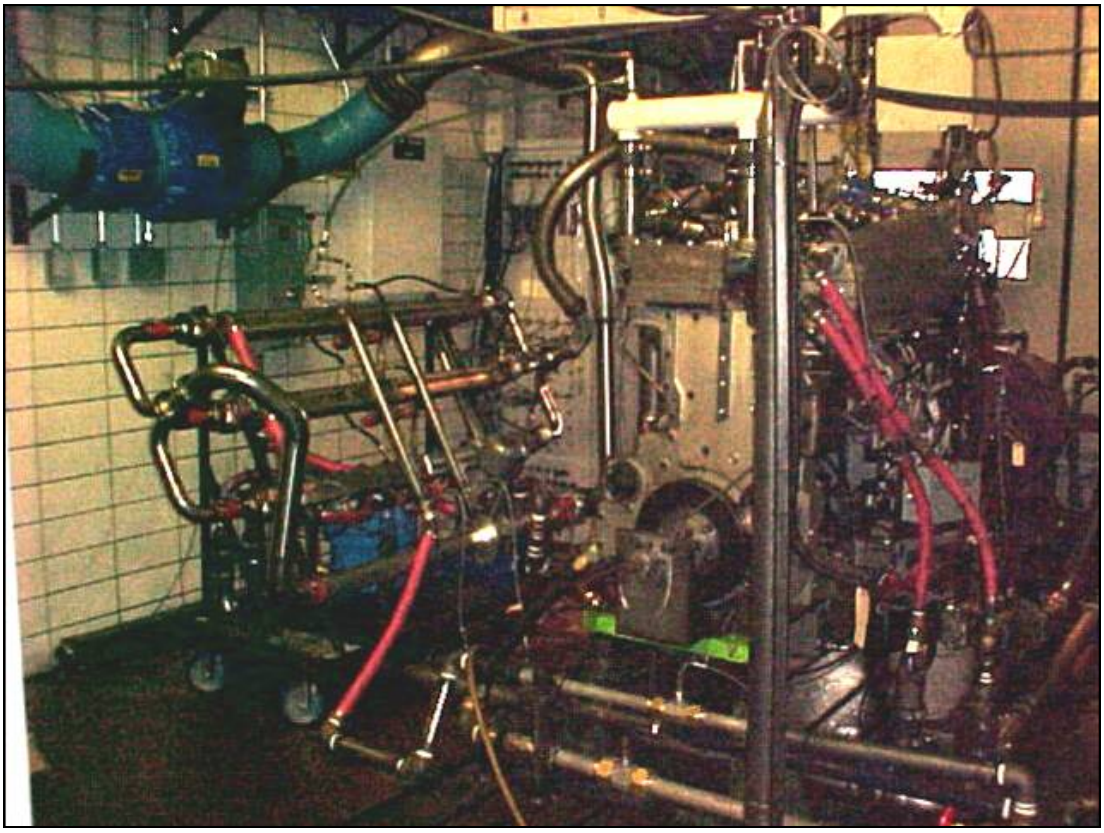

Figure 19: Laboratory Low Pressure Loop EGR System

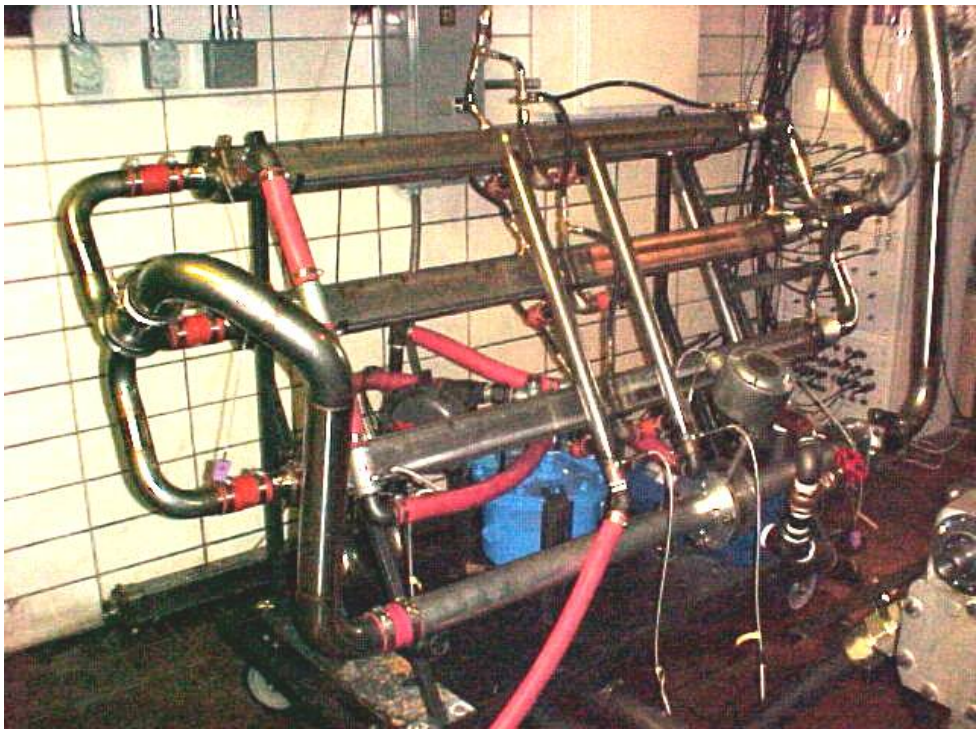

Testing was started under lean burn (LB) conditions. The reason for this is because resolving issues with a new fuel delivery system is more easily done when an engine is not operating with EGR due to the difficulties in stabilizing the control loop for EGR. Commissioning of the hydrogen delivery system was a key part to this initial LB evaluation. The hydrogen delivery system needed to be verified for safe operation. The system parameters such as regulator pressure, Hydrogen Mass Flow measurement resolution, as well as other factors, needed to be tuned for good engine and measurement stability. After establishing hydrogen system operation and required set-points, procedures needed to be developed for safe operation and monitoring of the system as the engine was running. For example, parameters such as control loop gains, transitions, control interactions, and appropriate actions to take in the event of flash-back upstream in the intake system needed to be understood and developed. Finally, the data collected under LB conditions will be used as part of the verification phase of the modified in-cylinder combustion models to be developed under Task 3.3.

Testing was done at two loads. 14 Bar BMEP (1550lb-ft) was chosen because it enabled operation of the engine to Lambda in excess of 2.0 under LB conditions. The turbocharger on the engine was optimally matched for stoichiometric with EGR conditions at 18bar BMEP. Operation under LB conditions greatly increases the total mass flow the turbocharger must accommodate, and the limit for the turbocharger at Lambda slightly above 2 was reached at 14bar. Data was collected at 14bar under stoichiometric with EGR conditions to enable direct comparison to the LB data. Also, by collecting the data at both 14 and 18bar BMEP under

stoichiometric with EGR conditions, quantification of the impact of load on critical response factors was enabled.

Data was collected at 18bar BMEP (1990 lb-ft) because this corresponds to the project specification of 455bhp/330kw.

3.2.4 Prediction of In-Cylinder Combustion of Hydrogen-Enriched Natural Gas Using Computational Fluid Dynamics (CFD) Tools (Task 3.3)

The goal of this task is to expand the capability of existing CFD tools used at Cummins to predict in-cylinder combustion by incorporating QSK19G test data with hydrogen-enriched natural gas.

The Contractor shall:

- Utilize data generated in Task 3.2 above to enhance existing in-cylinder CFD tools to include operation with hydrogen-enriched natural gas.
- Submit an interim report detailing the improvements to existing in-cylinder CFD tools that shall include, but not be limited to:
    - Test cell data employed for development and verification of the CFD tool;
    - Technical approach employed to improve the CFD tools;
    - Results obtained with the improved CFD tools.

The objective of this task was to develop the ability to predict the impact of fuel composition on the heat release and subsequent engine performance. The subtasks included in reaching this objective included creating thermo physical property database, generating the algorithm to calculate the adiabatic flame temperature (AFT) using EQUIL and laminar flame speed (LFS) using Dugger's Equation, FORTRAN coding of the algorithm, and integrating it into GT-Power V6.2b8.

The work performed under this task involved enhancements, generated by Cummins Inc., to the standard turbulent combustion model of the commercial code GT-Power Version 6.2. This code is used by Cummins Inc. under license from Gamma Technologies, Inc. The enhancements include a Cummins developed capability to predict the change of in-cylinder heat release rate as fuel and charge composition changes from lean burn engines using standard pipeline natural gas (whose principle component is methane).

The GT-Power model needs to be initially calibrated using pre-existing data with natural gas (Methane) as the fuel, before it is used for predicting the heat release and engine performance under conditions using the Target Fuel. The pre-existing data can be actual engine data or the data generated using 3D combustion software like KIVA-SI. In this case the resulting GT-Power model with enhanced capability of LFS is calibrated using engine data for fixed heat release rate (HRR) with pipeline quality natural gas. This calibrated fixed HRR model is further used as a baseline model to develop a predictive GT-Power model. The predictive model in GT-Power is then calibrated by changing the standard turbulent flame speed model parameters for a given

HRR with pipeline quality natural gas. This predictive model can then be used to predict the heat release and engine performance using the target fuel.

Typically, engine data or predictions from KIVA-SI are available that provide heat release rate on the target lean burn engine when fueled with natural gas. The PIER program,"330 kWe High Efficiency and Low Emission Engine Using Thermo Chemical Fuel Reforming", will expose the target engine to stoichiometric conditions with a fuel/charge composition far different from lean burn with natural gas and thus it is necessary to predict the in-cylinder heat release rate to optimally exploit the unique characteristics of the reformate. A detailed interim report was prepared and submitted to the Energy Commission that describes the technique Cummins Inc. has developed to predict the laminar flame speed (LFS) of the in-cylinder charge composition and how this estimate of LFS is subsequently utilized by the GT-power turbulent flame speed model. Results shown in Section 4.2.3 verify the accuracy of the technique. The enhanced analytic tool was used to generate an engine configuration under Task 3.4 with the intent to optimally exploit the properties of the Reformate that will be generated by the thermo chemical recuperation system.

3.2.5 Design Optimal Combustion Recipe for the QSK19G Engine Using Hydrogen-Enriched Natural Gas (Task 3.4)

The objective of Task 3.4 was to design a combustion recipe for the QSK19LG engine to optimally utilize the properties of the hydrogen enriched Reformate fuel expected to be delivered by the thermo chemical recuperation system to be designed by GTI.

The Contractor shall:

- Use the enhanced in-cylinder CFD tools to predict an optimal combustion recipe for the QSK19G engine to maximize brake thermal efficiency and meet emissions, cost, and reliability goals;
- The optimal combustion recipe will include:
    - A new combustion chamber shape (piston bowl);
    - An inlet port swirl level;
    - Spark plug geometry;
    - Camshaft design;
    - Turbocharger specification;
    - After cooler and EGR cooler specification

This Task was completed in the following steps:

- Design a very high turbulence combustion bowl in the piston to provide rapid heat release rate, thereby ensuring high brake thermal efficiency, using the Cummins enhanced version of KIVA-SI (which can only accommodate natural gas in its state of development employed for this work).

- Determine combination of hydrogen, natural gas, and EGR fraction that will best emulate Reformate fuel and use the H2/NatGas/EGR blend as surrogate for subsequent analysis(required because engine data with Reformate not available whereas data with H2/NatGas/EGR blends was available).
- Determine a normalized heat release rate to be expected with the optimal combustion bowl using Reformate fuel by adjusting the KIVA-SI natural gas predicted heat release rate; this was done by using the ratio of laminar flame speed predicted for surrogate blend with the laminar flame speed predicted for natural gas (laminar flame speeds for both fuels predicted with Dugger's Equation described in Task 3.3 Report, Reference 2).
- Execute GT-Power to find optimal turbocharger match and determine engine BTE and turbine outlet temperature as functions of varying compression ratio, intake valve closing angle, and spark timing while maintaining equal predicted brake power.
- Develop regressions of engine BTE and turbine outlet temperature as functions of compression ratio, intake valve closing angle, and spark timing.
- Incorporate model of thermo chemical recuperation system performance (supplied by GTI) as a function of three way catalyst outlet temperature, expected increase in turbine outlet temperature by oxidation in the three way catalyst, and engine performance regressions in an overall optimization process to determinate engine compression ratio, inlet valve closing angle, and spark timing to maximize system BTE while meeting program system out emissions requirements.

The details concerning each execution of these subtasks are provided in the Interim Report for Task 3.4 that was submitted to the Energy Commission.

3.2.6 Procure, Assemble, and Test the Hydrogen-Enriched Natural Gas QSK19G Combustion Recipe and After Treatment System (Task 3.5)

The goal of this task is to design, procure, assemble and pre-test the QSK19G engine combustion and after treatment system for hydrogen-enriched natural gas operation.

The Contractor shall:

- Specify the performance characteristics required of the TWC;
- Obtain quotations from catalyst suppliers for the specification above;
- Procure the TWC;
- Specify engine components required for hydrogen-enriched natural gas combustion in QSK19G engine
- Procure the engine components required of the new QSK19G combustion recipe, which shall include:
    - New pistons;
    - New cylinder liners;
    - Reconditioned cylinder heads with appropriate inlet port swirl;
    - New camshaft;

    - New turbocharger;
    - New after cooler.
- Assemble the engine with the new components and integrate with the TWC.
- Test the new engine assembly with TWC according to the test plan specified under Task 3.1 above.
- Verify performance predictions made under Task 3.4 above.

This Task was completed in the following steps:

- Install Task 3.4 combustion recipe into 19L test engine. Installation includes turbocharger, pistons, camshaft, reconditioned cylinder heads and current production after cooler.
- Finalize design of the test cell installation that can accommodate testing of the Task 3.4 combustion recipe with the ATWC.
- Test the Task 3.4 combustion recipe without the ATWC with natural gas and blends of hydrogen and natural gas that represent Reformate compositions. Confirm the combustion recipe test results match the predicted results from Task 3.4.
- Install proposed ATWC test system arrangement in test cell to accommodate testing of the ATWC with natural gas and blends of hydrogen and natural gas that represent Reformate compositions.
- Test combustion recipe with the ATWC to demonstrate the target engine and emissions performance when operating on pipeline natural gas and blends of natural gas and hydrogen that represent Reformate compositions.

The plan for testing the Task 3.4 recipe was divided into two parts. Part 1 of the testing was to evaluate the recipe within the existing test system setup. The purpose was to establish a baseline that could be compared to predicted performance from the cycle simulation analysis. The test system in the current configuration was also well known from previous testing and allowed for a quick implementation. Part 2 included installation of the ATWC testing configuration and associated controls. The specific goal of Part 2 testing was to understand the after treatment performance and the effects on system performance.

It was necessary to determine a "surrogate" fuel composition to represent the Reformate expected from TCR. This surrogate fuel composition was used for analysis and preliminary testing purposes because engine data using Reformate was not available at the time this testing and analysis was conducted. The extensive testing conducted by Cummins using hydrogen and natural gas blends is fully described in the Interim Report For Task 3: Develop QSK19g Engine and After Treatment System For Hydrogen Enriched Pipe Line Natural Gas Task 3.2: Hydrogen Enrichment Testing Of Baseline QSK19g Engine. Results from this testing were used to determine that 12 percent mass fraction hydrogen in natural gas with 35 percent EGR would serve as an appropriate surrogate for Reformate expected from the TCR system.

The high level test plan for the testing done is shown below.

- Task 3.5 Base Combustion Recipe Testing – Part 1
    - Startup and Break-in
    - Limit Evaluation and Operating Space Mapping
    - System Optimization for BTE versus NOx
    - H_2 and Natural Gas Testing – Surrogate Fuel
- Task 3.5 ATWC and Recipe Testing – Part 2
    - Baseline Testing No Dithering – Natural Gas
    - Dithering Evaluation and Testing – Natural Gas
    - System Optimization – Natural Gas
    - Extended Operation Testing- Natural Gas
    - H_2 and Natural Gas Testing – Surrogate Fuel

A deviation from the test plan was encountered when the camshaft needed to be changed in order to accommodate the hydrogen rich fuel composition. This was a key finding as a result of the testing that was done under Part 1 of Task 3.5. As a result, performance optimization and H2 testing needed to be repeated in order to demonstrate target deliverables as well as verify analytical results when operating on hydrogen fuel blends.

A measurement system analysis (MSA) was conducted to understand the repeatability of the critical measurements obtained by the system. The MSA provides statistical error bars for the measurements provided by the system. Results from the MSA are shown in Table 8.

The measurement system analysis in Table 8 was split into two sections, inputs and outputs. The coefficient of variance (COV) was used to assess the repeatability of the key measurements. To minimize the COV, the data collection time was increased from 2 minutes to 10 minutes which provided more repeatable average data point values for a given operating condition. The increased test point averaging time was required because of the dithering used on the engine to maximize CO and NOx conversion efficiency of the ATWC. The COV data in the following MSA employed the 10min averaging time per point repeated twice per hour over approximately 22hrs.

Table 8: Measurement System Analysis Results

MSA on Critical Adjustment Parameters (CAP)		
CAP	Units for Variation	Coefficient of Variance (COV)
Speed	RPM	0.20%
Torque	Torque	0.60%
EGR Flow	lbm/hr	0.45%
Timing	CA deg	1.60%
Intake Manifold Temperature	deg F	0.09%
MSA on Measured Critical Response Factors (CFR)		
CFR	Units for Variation	Coefficient of Variance (COV)
Engine Out BSNOx	g/hp-hr	2.06%
Engine Out BSCO	g/hp-hr	0.61%
TWC Out BSNOx	g/hp-hr	10.10%
TWC Out BSCO	g/hp-hr	9.40%
Air Flow	lbm/min	0.06%
Fuel Flow	lbm/hr	0.04%
BTE	%	0.04%

Baseline testing of the ARICE combustion recipe was done with the test cell configuration shown in Figure 20.

Figure 20: ARICE Baseline Test Cell Configuration

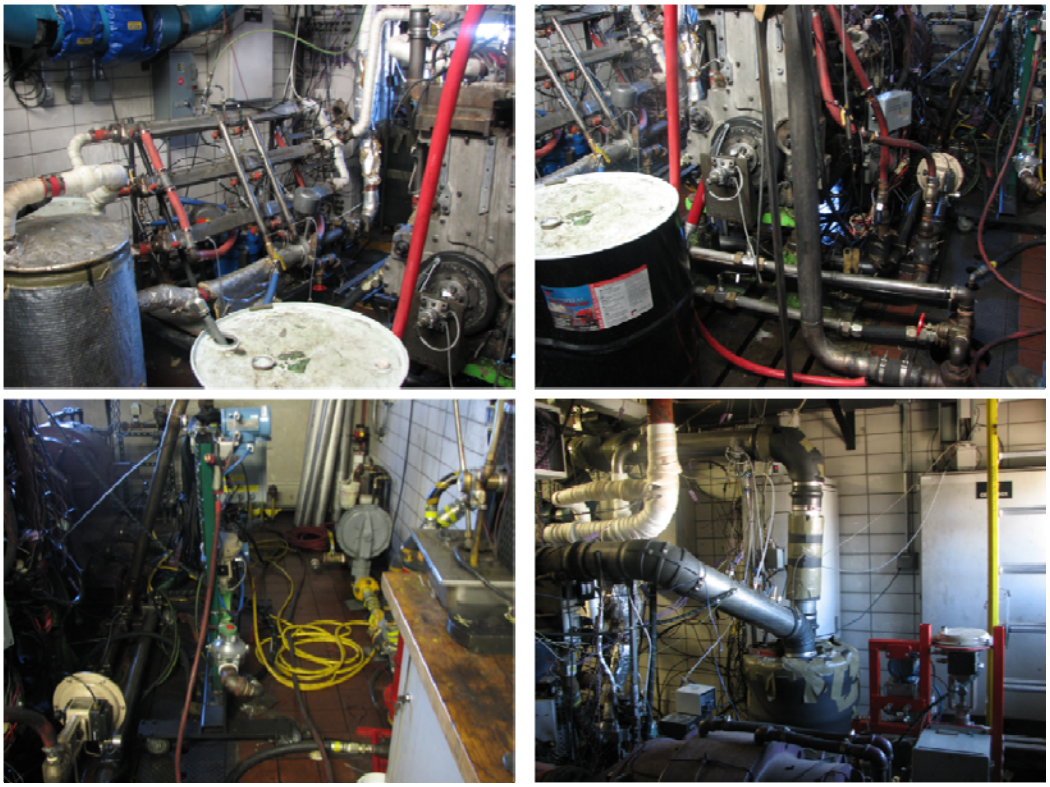

The baseline test cell configuration engine was rebuilt with the Task 3.4 combustion recipe which consisted of the following components:

1. Turbocharger
2. Optimized Nebula Piston Bowl
3. Camshaft
4. Pre-Chamber Spark Plugs
5. High Levels of Inlet Port Swirl

To incorporate the ARICE system requirements into the test cell, a design study was conducted to determine a configuration that would allow for individual testing of the ATWC as well as the complete ARICE system. The design study was conducted by developing a space claim model for the ARICE system using the Cummins standard Pro-E CAD system. The final space claim model comparison is shown in Figure 21.

Figure 21: Final Space Claim Model Comparison

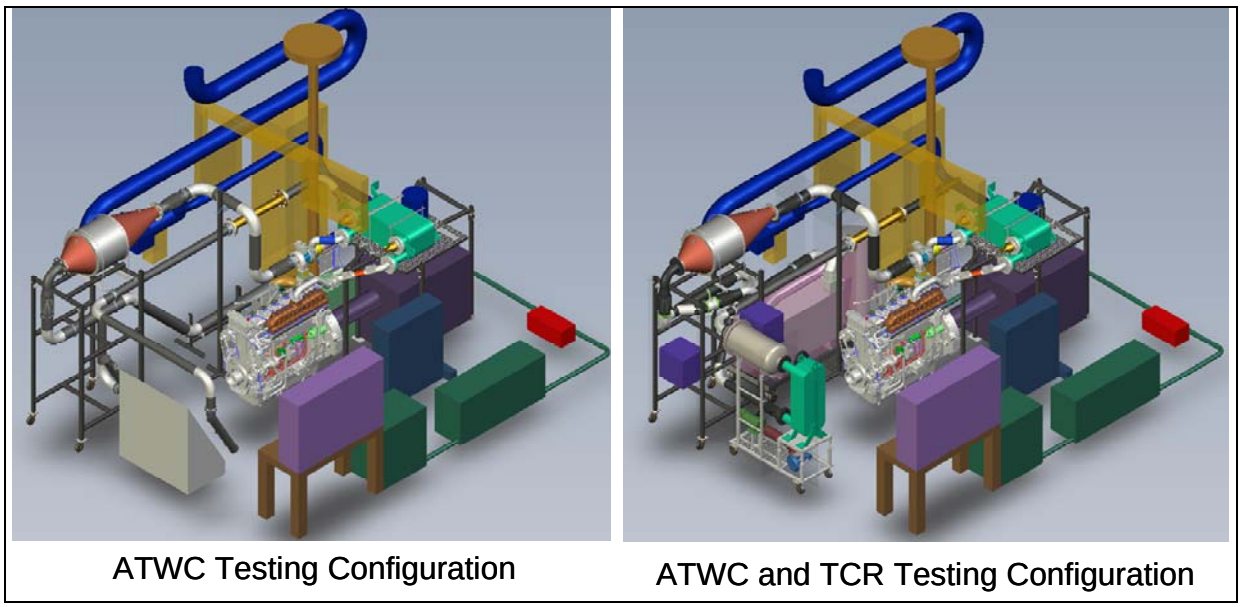

The design was configured in a way that allowed for quick installation of the remaining ARICE system components and minimal rework to the installation. In additional to the ARICE system design the test cell model that was developed also incorporated the new charge air cooler design. Further detail is provided in section 34.4.

Several things are different between the ATWC Testing Configuration and the ATWC and TCR Testing Configuration. The differences are:

- EGR/Reformate Cooler
- Tubing arrangement for Exhaust and EGR connection to EGR Cooler
- Addition of TCR and Fuel Pre-heater
- Implementation of Emissions Switching Box Sample Locations.

The focus of Task 3.5 was performance testing of the ATWC testing configuration. Details of the ATWC and TCR testing configuration will be covered in the Task 4.1 report.

The completed ATWC Testing Configuration design was fabricated and installed into the test cell. Figure 22 provides photographs of that installation.

Figure 22: ATWC Test Cell Installation

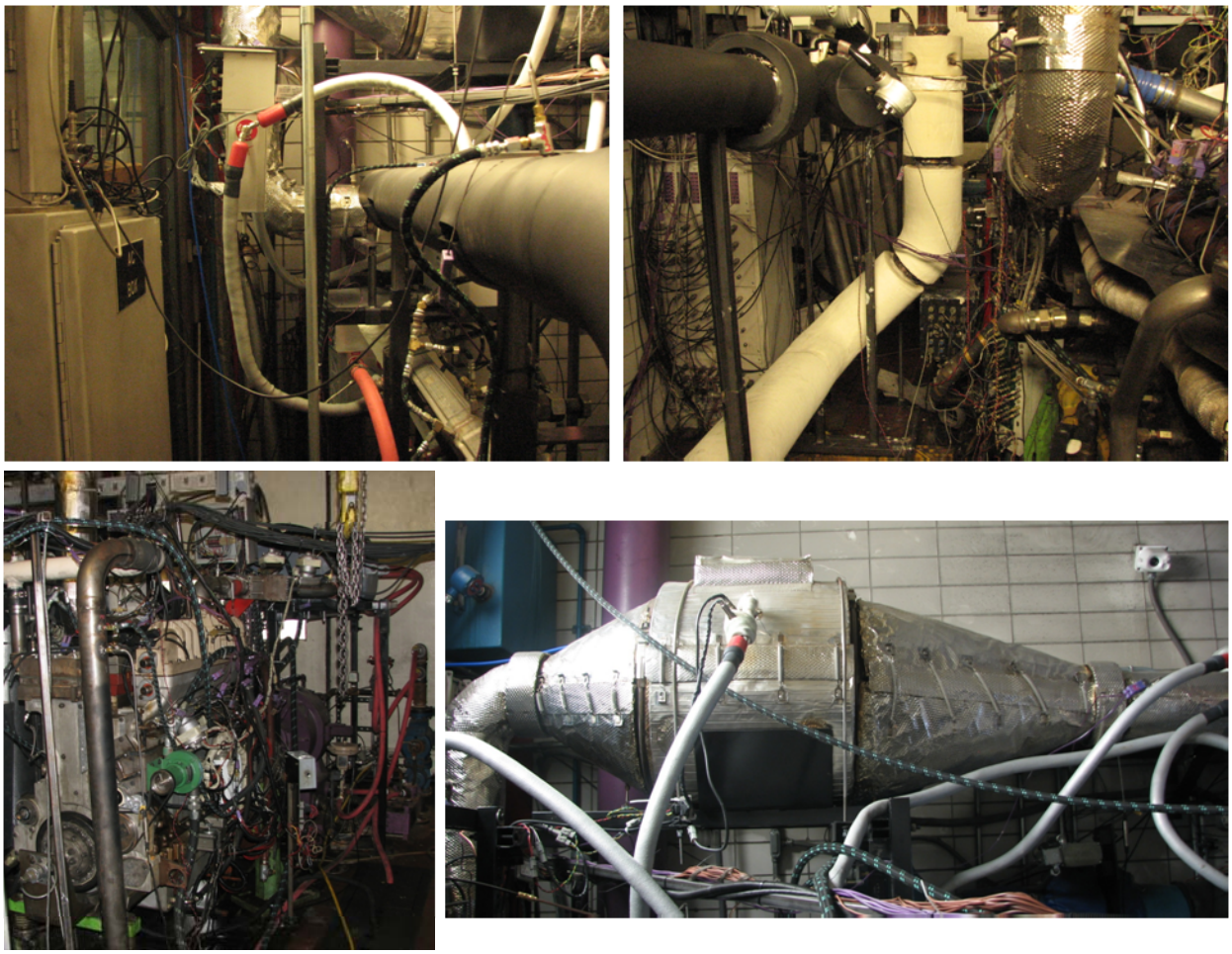

To facilitate better control of the intake manifold temperature, a new charge air cooler was designed, procured, and installed. The previous design used process cooling water connected

directly to the cooler. The previous configuration resulted in condensation and corrosion on the fins of the cooler when running the engine with EGR.

The new configuration uses a cooler with better materials for corrosion resistance. An auxiliary cooler that sub-cools the engine coolant to the desired charge cooler outlet temperature was also used to keep the cooling media above the condensation temperature of the charge. Due to the high effectiveness of the heat exchanger the charge at the outlet of the cooler achieves nearly the same temperature as the coolant going in to the charge cooler.

Two system diagrams are depicted in Figure 23 and Figure 24. Figure 23 is a diagram of the system using the previous charge air cooler, whereas, Figure 24 is after the installation of the new charge cooler.

Figure 23: System Schematic - Previous Charge Cooler Design

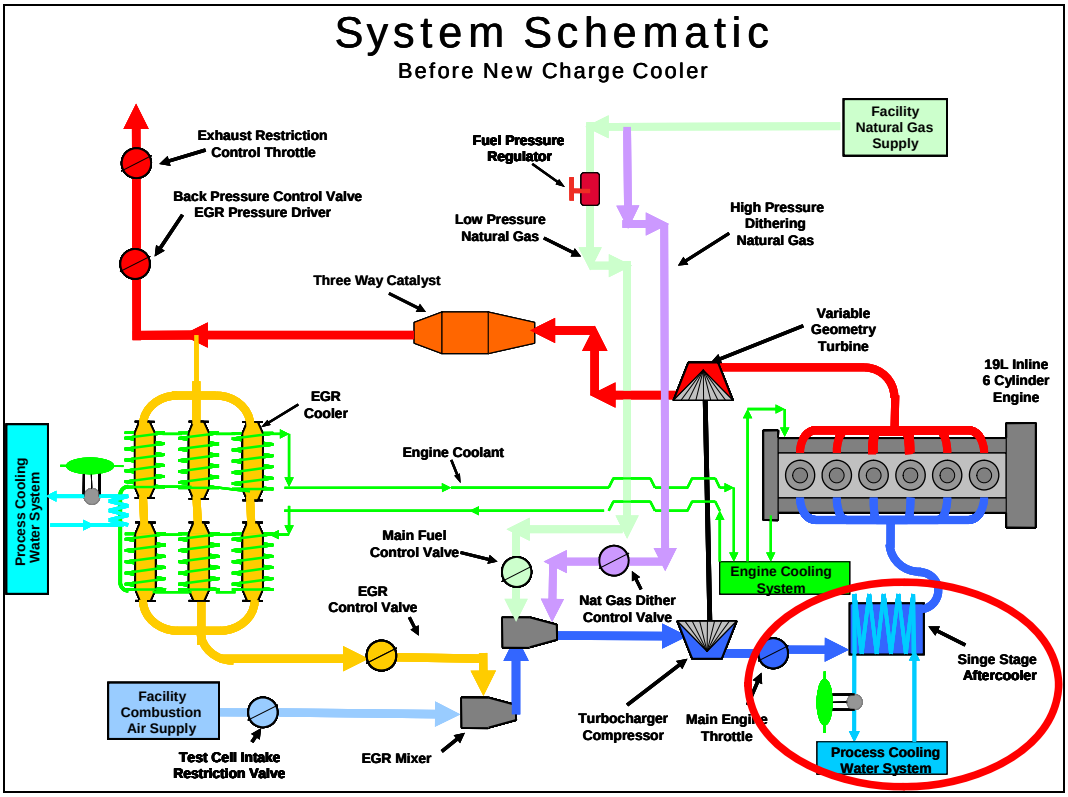

Figure 24: System Schematic - New Charge Cooler

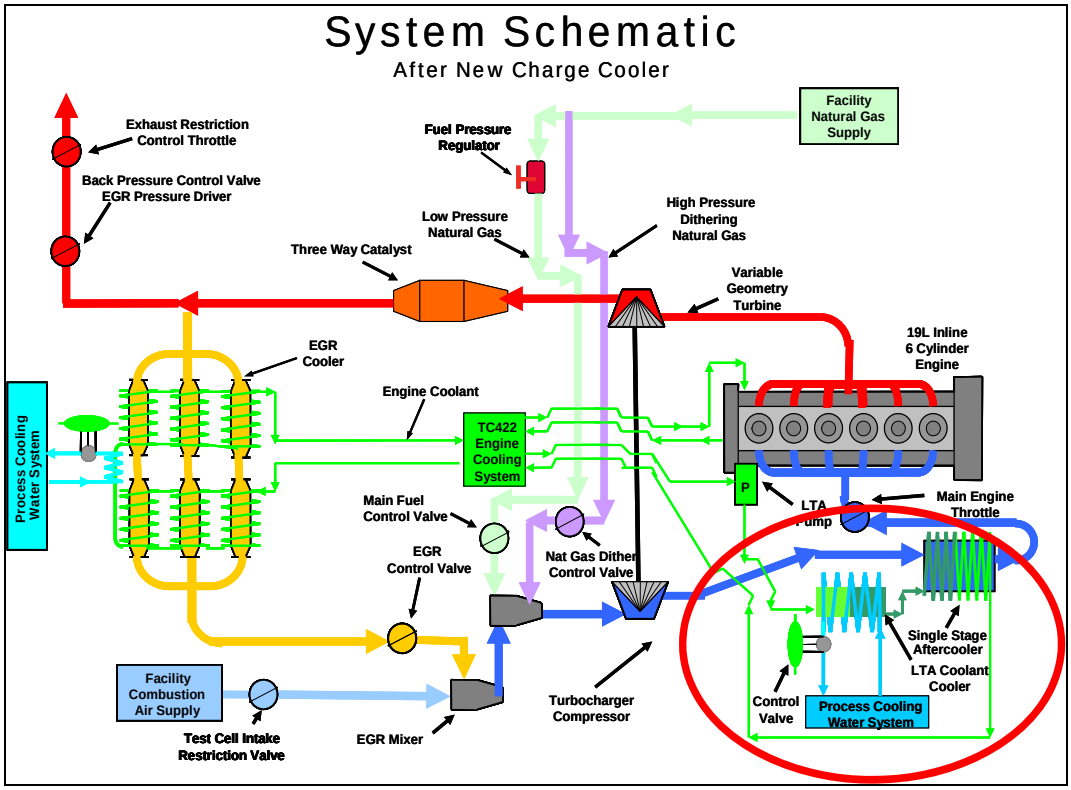

Benefits of the new cooler are listed below.

- Cooler effectiveness > 99.5 percent
- Increased cooling capacity to accommodate Reformate
- Allows engine operation with a cold throttle for better reliability
- Charge cooler material is resistant to corrosion
- Reduced cylinder to cylinder intake manifold temperature (IMT) Variation to < 5 degrees F
- Improved IMT temperature control with < 2deg F set-point variation

Testing was conducted on the baseline recipe to determine if the ARICE engine configuration chosen was capable of meeting the program performance deliverables for BTE, engine out emissions, and exhaust system temperatures. Testing of the ARICE combustion recipe indicated that it was capable of meeting the performance requirements when running on natural gas and about 28 percent EGR. Table 9 provides a performance summary of the ARICE Task 3.4 combustion recipe operating on natural gas.

Table 9: Natural Gas Optimized Performance

Parameter	Units	Demonstrated Performance
Data Point Number	(-)	1873
Crankshaft Power	kw	338
Engine Speed	RPM	1200
BMEP	bar	18
Engine Out BSNOx	g/hp-hr	1.11
Engine Out BSCO	g/hp-hr	1.94
Base Engine BTE	%	39
Lambda	(-)	1
EGR Mass Fraction	%	28%
Fuel	(-)	Natural Gas
Turbine Outlet Temperature	deg F	938

Testing was then conducted with blends of natural gas and hydrogen at 18Bar BMEP. Testing showed that a limit for compressor outlet temperature (COT) was encountered before the design point could be obtained. The COT limit of 446 degrees F is important because it ensures robustness of the compressor wheel against fatigue which is introduced as a result of creep.

The testing conducted with blends of hydrogen and natural gas did not match the analytical predictions from the cycle simulation program. Investigation of analytical models was conducted to better understand why the predictions did not match the test data when running on natural gas and hydrogen blends. The investigation showed that the turbocharger representation in the cycle simulation model was incorrect and didn't properly account for charge composition containing appreciable amounts of hydrogen. Modifications were made to the turbocharger model in the cycle simulation program to accommodate hydrogen rich charge compositions. The turbocharger model complexity significantly increased in order to deal with charge compositions containing hydrogen. A comparison of the turbocharger models before and after the enhancement is shown in Figure 25.

Figure 25: Original and New Improved Turbocharger Model in Cycle Simulation Program

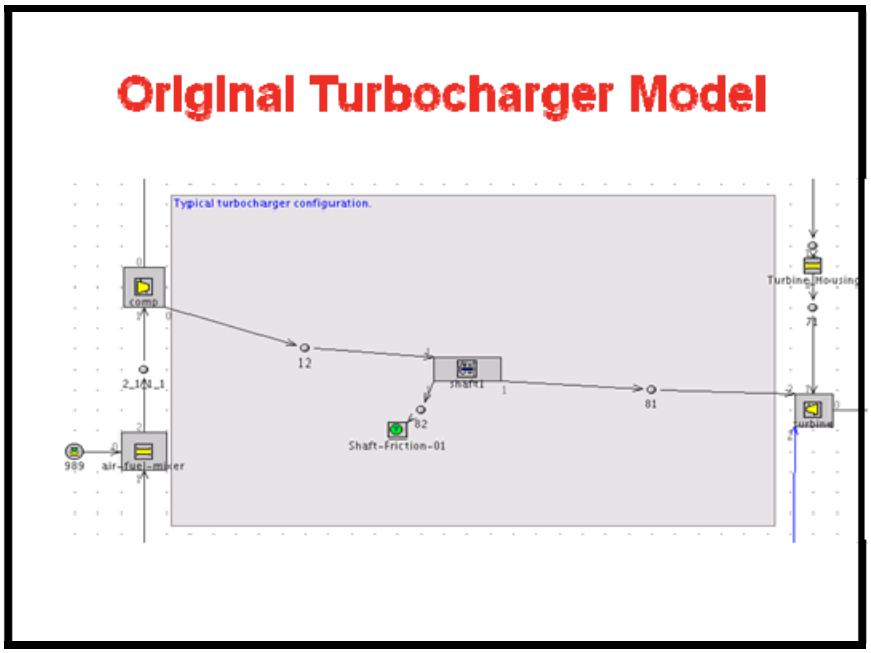

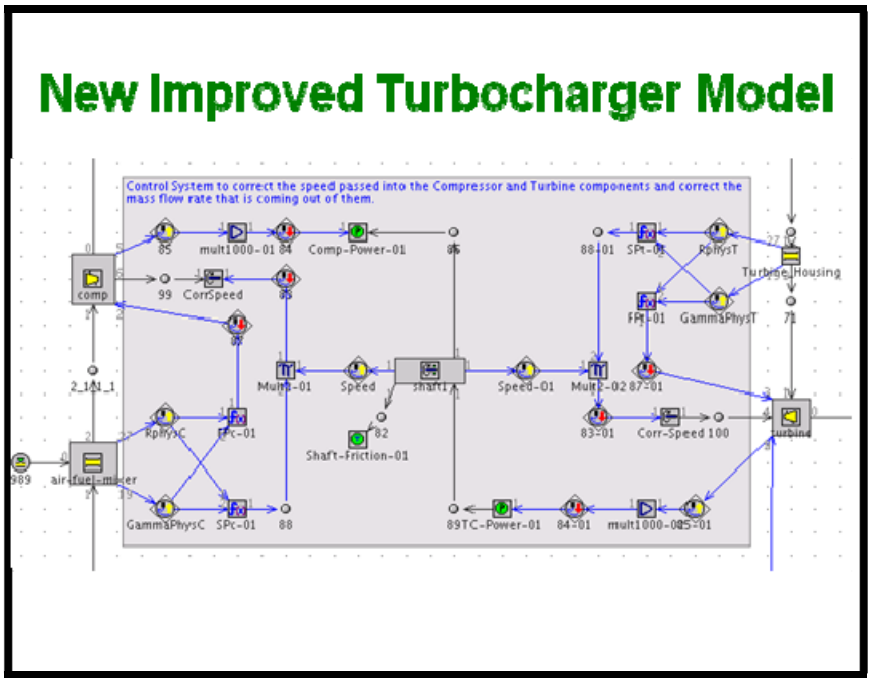

The cycle simulation model was then rerun at the operating condition at which test data indicated the compressor outlet temperature limit was encountered. Figure 26 indicates the predictions using the improved turbocharger model match test data.

Figure 26: Compressor Outlet Temperature Versus H2 Mass Function

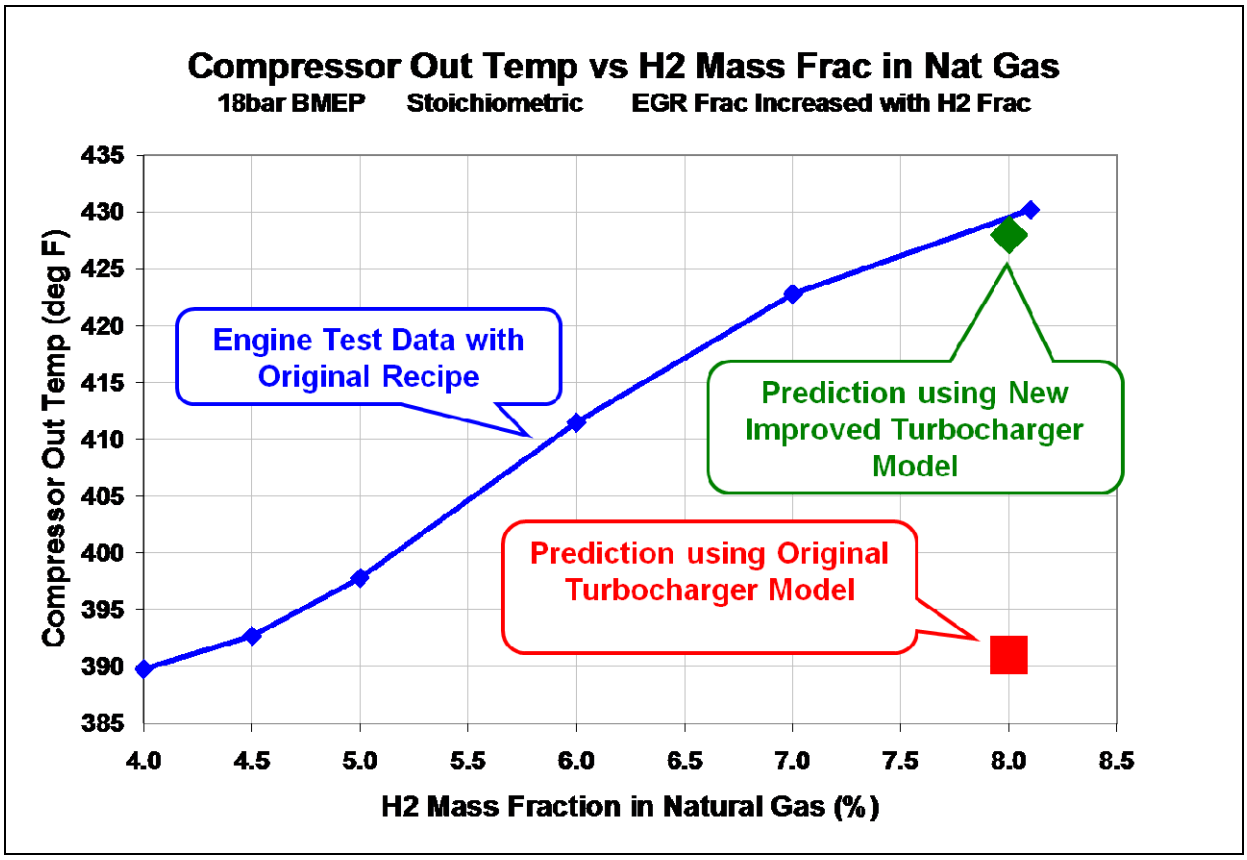

Cycle simulation analysis was conducted using the enhanced model to determine what could be done to improve the COT margin when operating on natural gas and hydrogen blends. The key components investigated were the turbocharger and camshaft match. There were no available turbocharger options that would improve the COT margin. A replacement camshaft was investigated that improved the engine volumetric efficiency thereby reducing the compressor boost requirement. Modeling indicated that the new camshaft provided adequate COT margin.

The analytical model was used to predict engine performance using a mixture of 12 percent by mass hydrogen blended with natural gas and 35 percent EGR (12MFH2 w/35 percent EGR) with the new Task 3.5 camshaft. The results were compared against test data collected in the test cell and the results matched very well. In addition the analytical model was used to predict the performance of the engine when operating on reformate.

Table 10 and Figure 27 compare the predictions and the experimental results as well as the predicted performance on reformate. The predictions indicate that there should be acceptable performance when operating at the design point using reformate.

Table 10: Comparison of Cycle Simulation Predictions Versus Experimental Results

Combustion Recipe Comparison - Original Task 3.4 vs Task 3.5						
		Measured Data		Predictions With Improved Turbocharger Model		
Parameter	Units	Task 3.4 Camshaft	Task 3.5 Camshaft	Task 3.4 Camshaft	Task 3.5 Camshaft	Task 3.5 Camshaft
Fuel	(-)	12%MFH2	12%MFH2	12%MFH2	12%MFH2	Reformate
Point #	NONE	532	1852	Predicted 532	Predicted 1852	(-)
Speed	RPM	1200	1200	1200	1200	1200
BMEP	BAR	14	14	14	14	18.6
EGR_FRAC	%	36.1	35.9	36.1	35.9	35
VOL EFF	%	0.809	0.842	0.808	0.881	0.857
COT	deg F	361	347	361	341	370
BTE	%	37.5	36.8	37.1	36.5	38.7

Figure 27: Compressor Outlet Temperature Predictions
Versus Brake Mean Effective Pressure

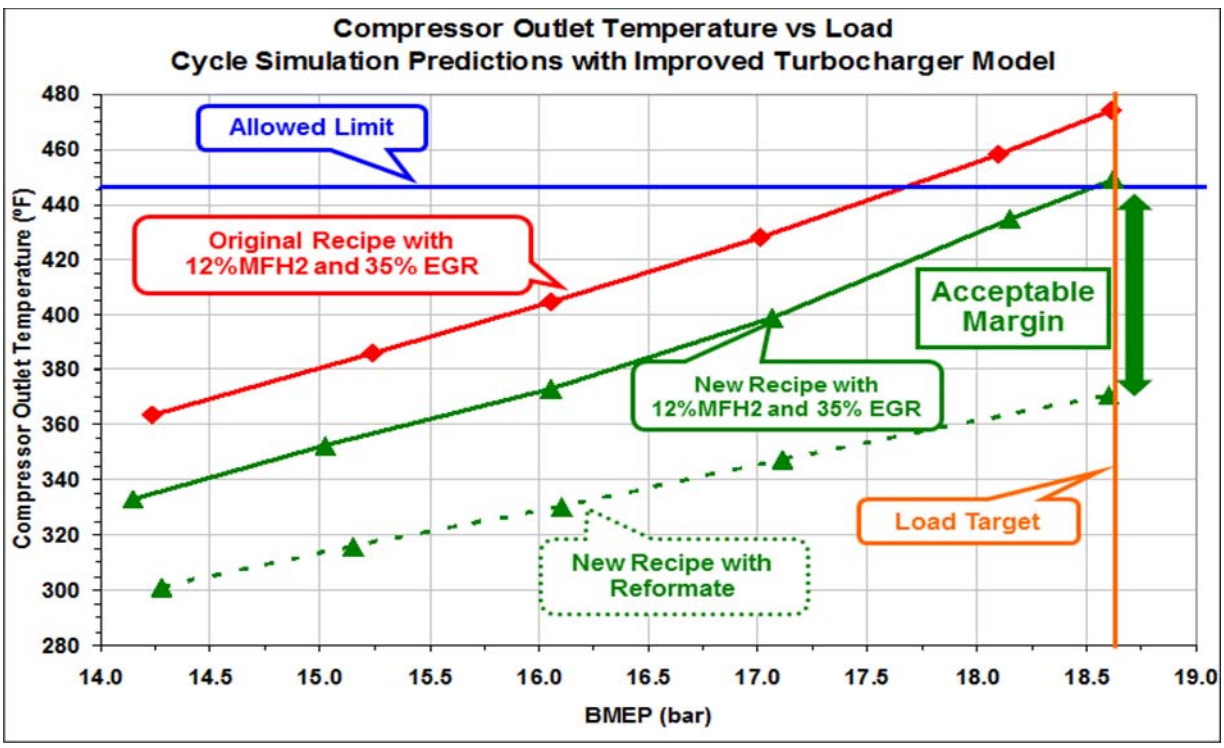

Dithering and ATWC Optimization with Natural Gas

Testing was conducted with the ARICE recipe and the advanced three way catalyst (ATWC) to determine if after treatment performance could deliver CARB emissions of 0.023 g/hp-hr NOx and 0.030 g/hp-hr CO. Given the expected brake thermal efficiency (BTE) of the system, these levels correspond to 7 PPM NOx and 14 PPM in the exhaust gas exiting the ATWC.

Testing was done with two types of fuel, pipeline natural gas as well as blends of natural gas and hydrogen. Emissions data was taken from 3 locations to quantify emission reduction performance. The measurement locations relative to the ATWC are illustrated in Figure 28. Note that the catalyst is comprised of two "bricks": an entrance brick and a second brick. The formulations of wash coat and precious metal ratios are unique for both bricks.

Figure 28: Emission Measurement Locations

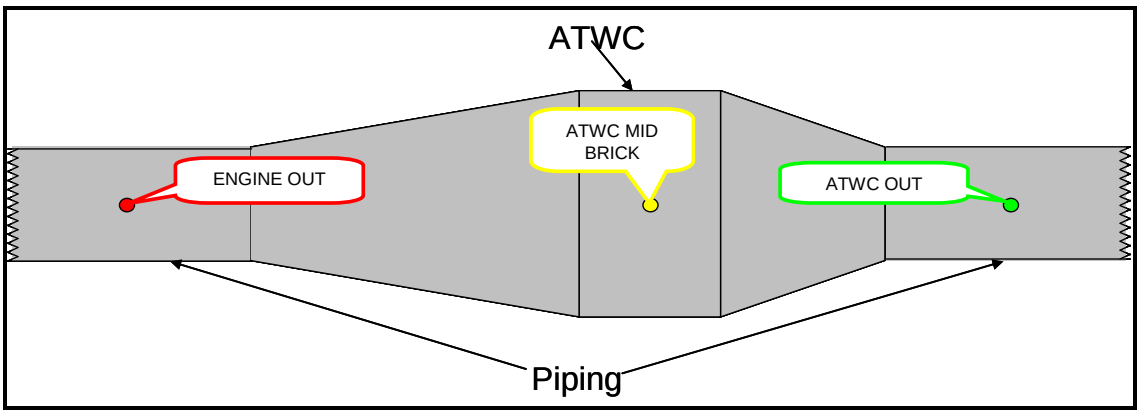

A sampling system was designed that allowed emissions measurements at multiple locations using different emissions sampling equipment. The measuring equipment includes a conventional gas sampling "bench" (Cart 104) which provides CO, CO2, O2, NOx, and Unburned Hydrocarbons (UHC), as well as a separate sampling circuit for EGR CO2 in the intake charge. A Fourier transform infra-red (FTIR) cart is employed to provide speciation of the UHC as well as measurement of ammonia. A hydrogen mass spectrometer is also employed (MSHA 1000) to quantify the amount of hydrogen at various locations. A diagram of the sampling system is shown in Figure 29.

Figure 29: Emissions Sampling System Diagram

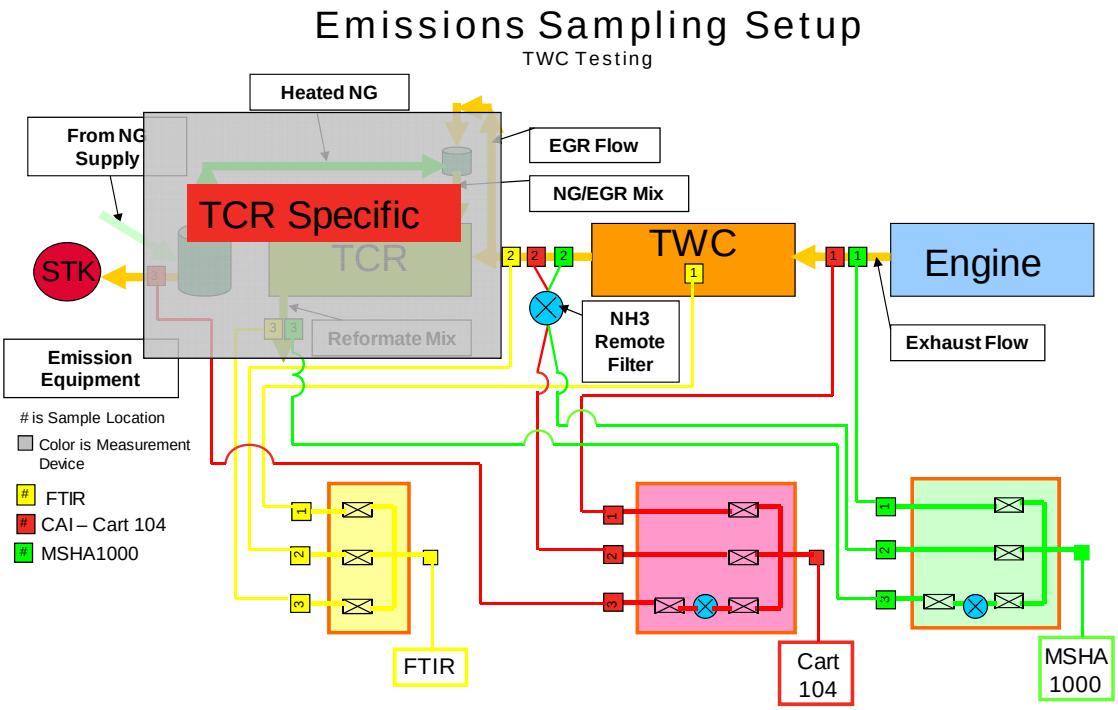

Sampling from multiple locations required the use of heated switching boxes. The boxes have 3 inputs and 1 output and are maintained at 375 degrees F. Task 3.5 testing required 2 of the 3 sample locations to be used. The third sample location will be utilized when the TCR is installed and operational.

The switching boxes were interlinked to control logic at the test cell that allowed ranges on Cart 104 to be changed depending on the sample location. This allowed the measurement resolution to be improved at the outlet of the ATWC and accommodate much higher engine out concentrations.

To enable simultaneous conversion of NOx, CO and HC by the ATWC, an air fuel ratio dithering strategy was utilized. A schematic representing the dithering strategy employed is shown in Figure 30.

Figure 30: Dithering Strategy Diagram

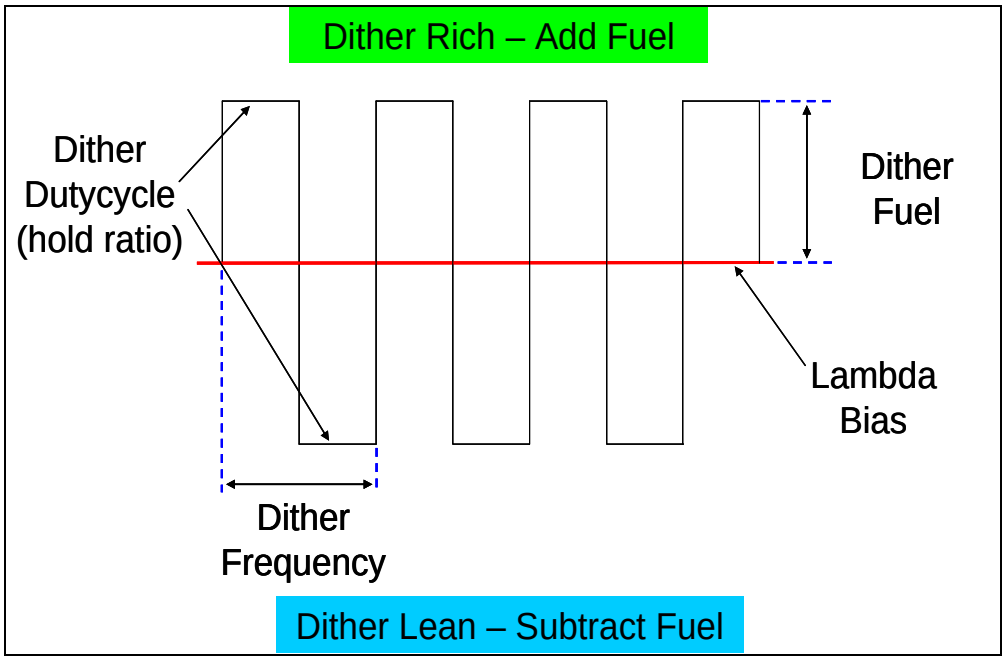

Parameters from the dithering schematic are described below.

1. Dither Duty cycle – is the hold ratio between the rich and lean Lambda. When the dither duty cycle is 0.5 the split between rich and lean is equal. If the dither duty cycle is greater than 0.5, the rich dither duration is longer than that of the lean dither.
2. Dither Frequency – is the number of times per second Lambda is switched from rich to lean with units of Hertz (Hz).
3. Dither Fuel – is the amount of fuel that is used to dither Lambda rich and then the amount of fuel taken away to dither lean.
4. Lambda Bias – is the overall engine Lambda required to maintain emissions compliance. The goal is for Lambda bias to be very near Lambda ~1.0 to achieve maximum engine Brake Thermal Efficiency (BTE).

3.3 Demonstrate Integrated TCR, QSK19G Engine and After-Treatment System (Task 4)

3.3.1 Integrate and Test TCR System with QSK19G Engine and After Treatment Designed for Hydrogen-Enriched Natural Gas (Task 4.1)

The goal of this task is to optimize the performance of the advanced QSK19G engine and after treatment system designed for hydrogen enhanced combustion when integrated with the GTI-developed TCR system for supplying the hydrogen-enriched natural gas fuel blend.

The Contractor shall:

- Install and Commission the GTI developed TCR system into the test cell;
- Integrate the control of the TCR system into the advanced engine controls system;
- Verify performance of the integrated TCR/Engine/After treatment system meets program objective. Determine an optimal operating condition (defined by speed, load, ignition timing, EGR fraction, TCR operating parameters including composition of the hydrogen-enriched fuel) for the combined system.

The system diagram in Figure 31 was developed to depict the overall configuration of the test apparatus.

Figure 31: Schematic of ARICE System in Test Cell

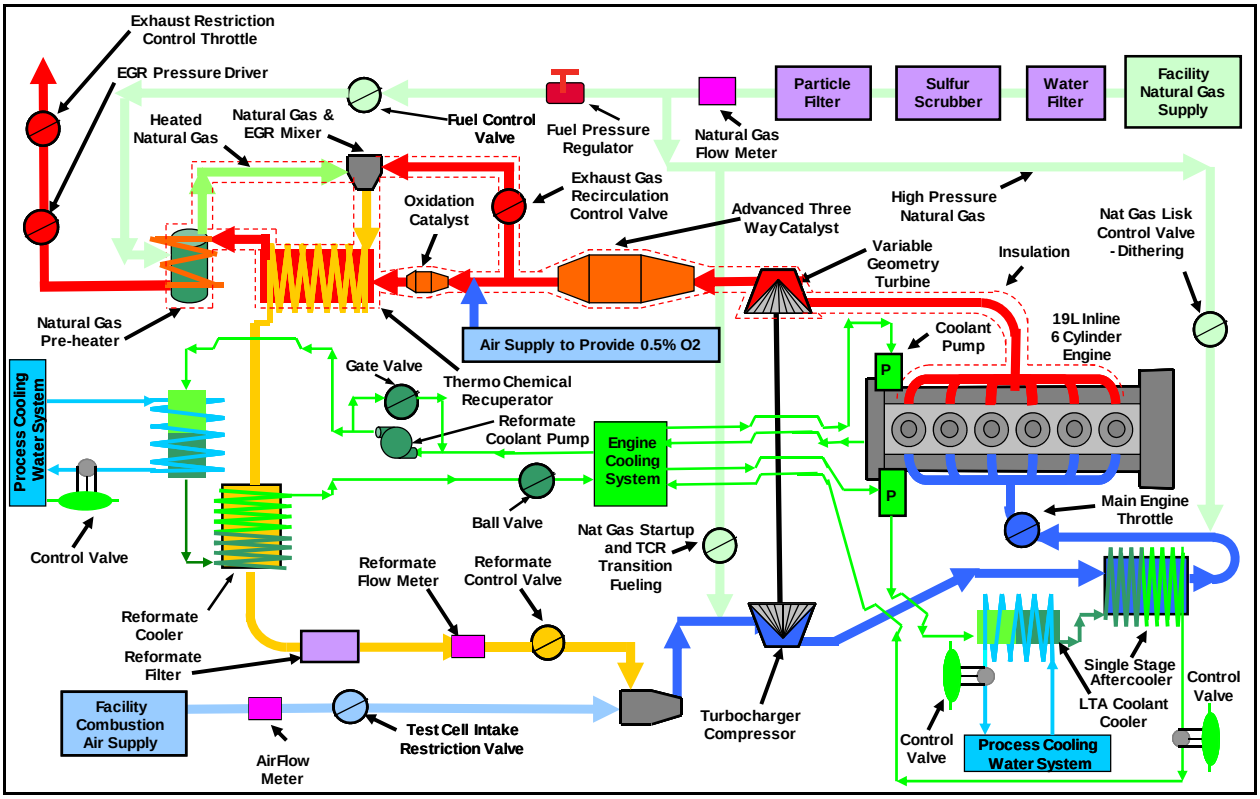

A Computer Aided Design (CAD) model of the test cell installation was generated using Pro-E. The model was used to develop the ARICE test system and ensure connections could be made to the test cell, engine and support systems without interference. The model of ARICE system in the test cell is shown in Figure 32.

Figure 32: Model of ARICE System in Test Cell

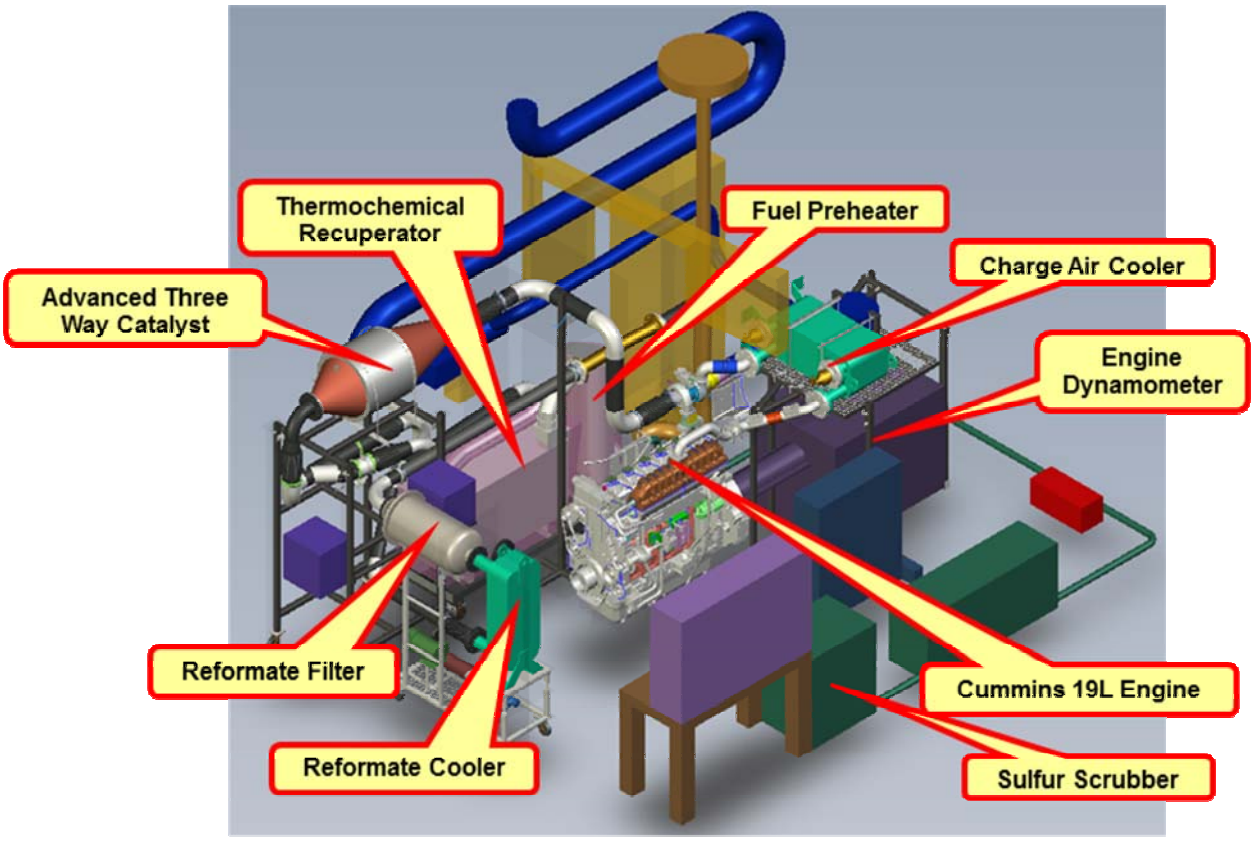

Pictures of key components of the ARICE system installed in the test cell are shown in Figure 33 (TCR), Figure 34 (Advanced Three Way Catalyst) and Figure 35 (Reformate Cooling Rig).

Figure 33: TCR Installed in Test Cell at Cummins

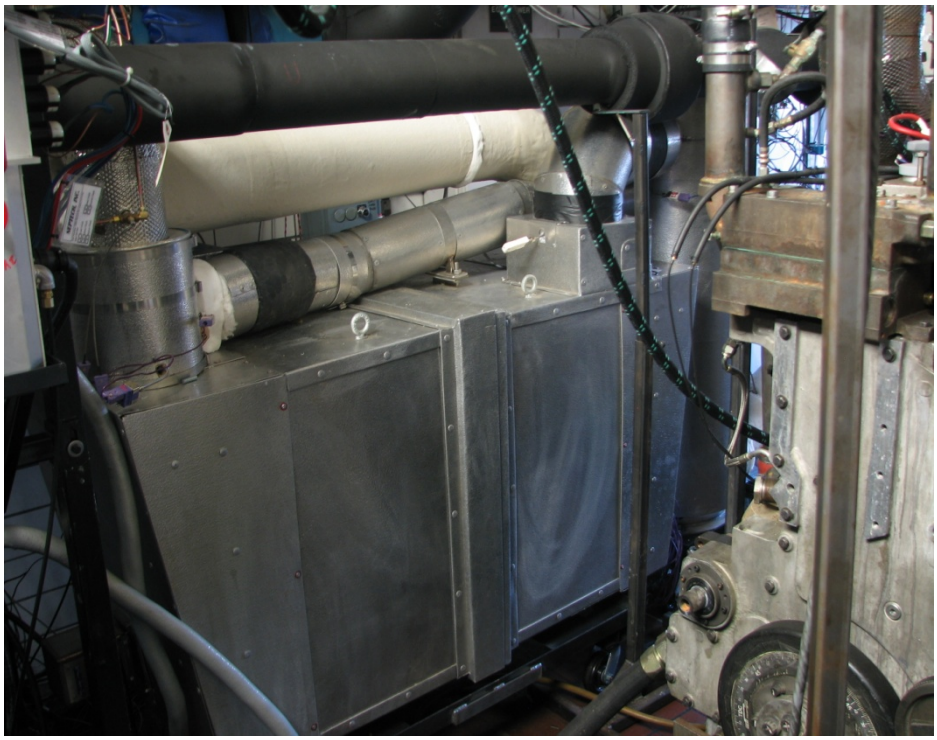

Figure 34: Cummins Advanced Three Way Catalyst

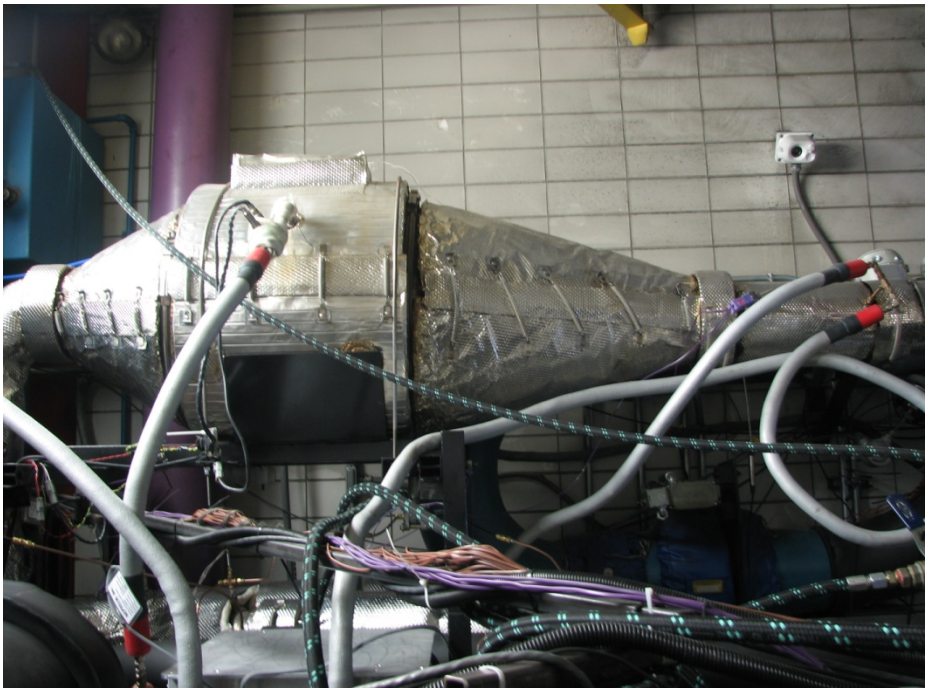

Figure 35: Reformate Cooling Rig

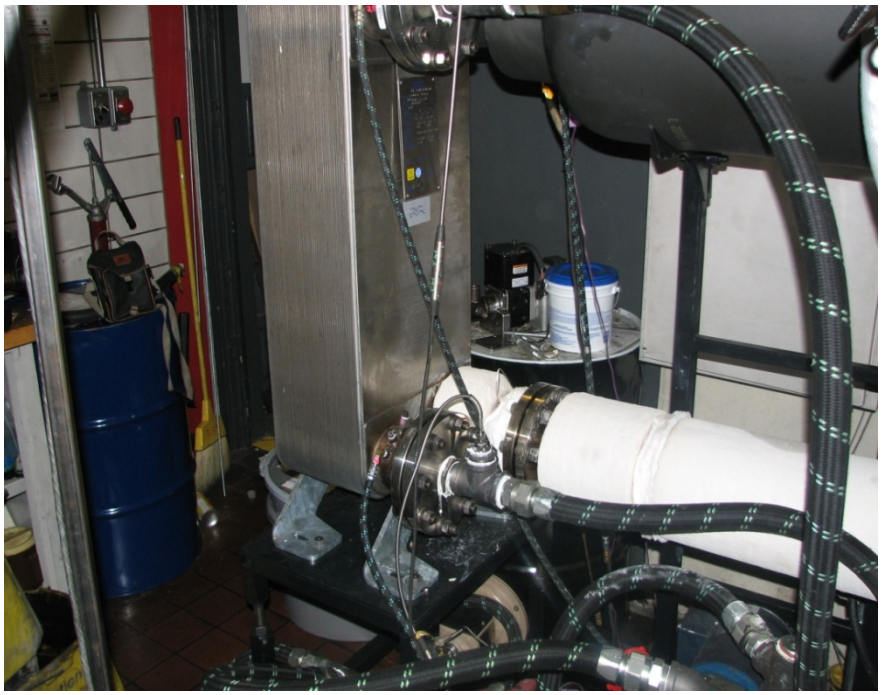

In order to characterize the performance of the ARICE system a gaseous emissions sampling system was developed. The system consisted of 3 emission carts and 3 different sampling locations for each cart. A diagram of the gaseous emissions sampling system used for testing of the ARICE system is shown in Figure 36.

Figure 36: Gaseous Emissions Sampling System

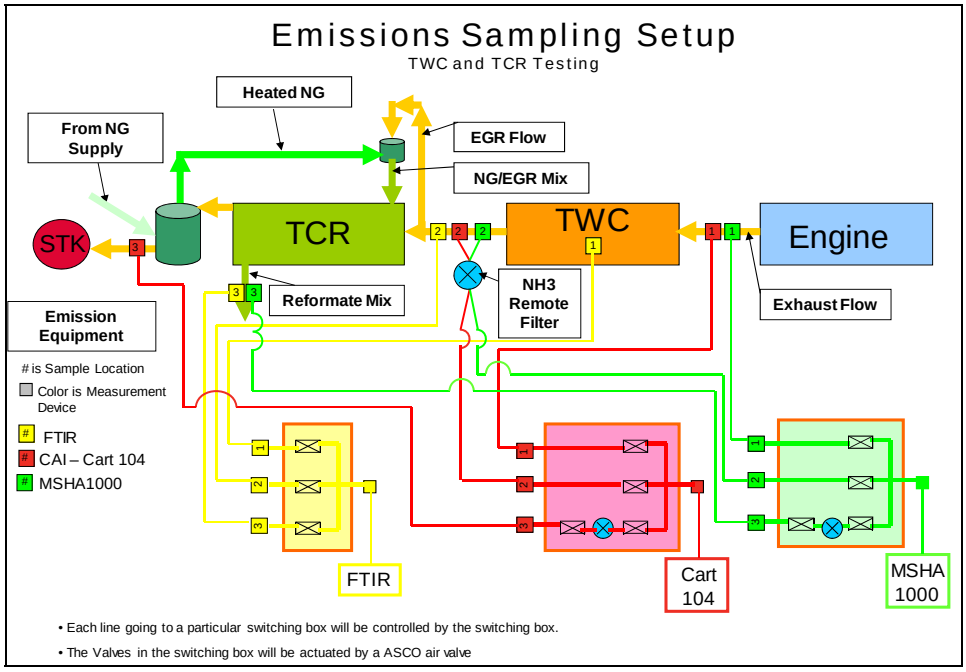

The fuel system for the TCR and ATWC was complex. A diagram of the system is shown in Figure 37 below. The fuel control system allowed for control of the amount of fuel that was sent to the TCR. The engine could run without sending fuel to the TCR and was required to do so in order to accommodate system warm-up.

Figure 37: Fuel System Diagram Used with TCR System

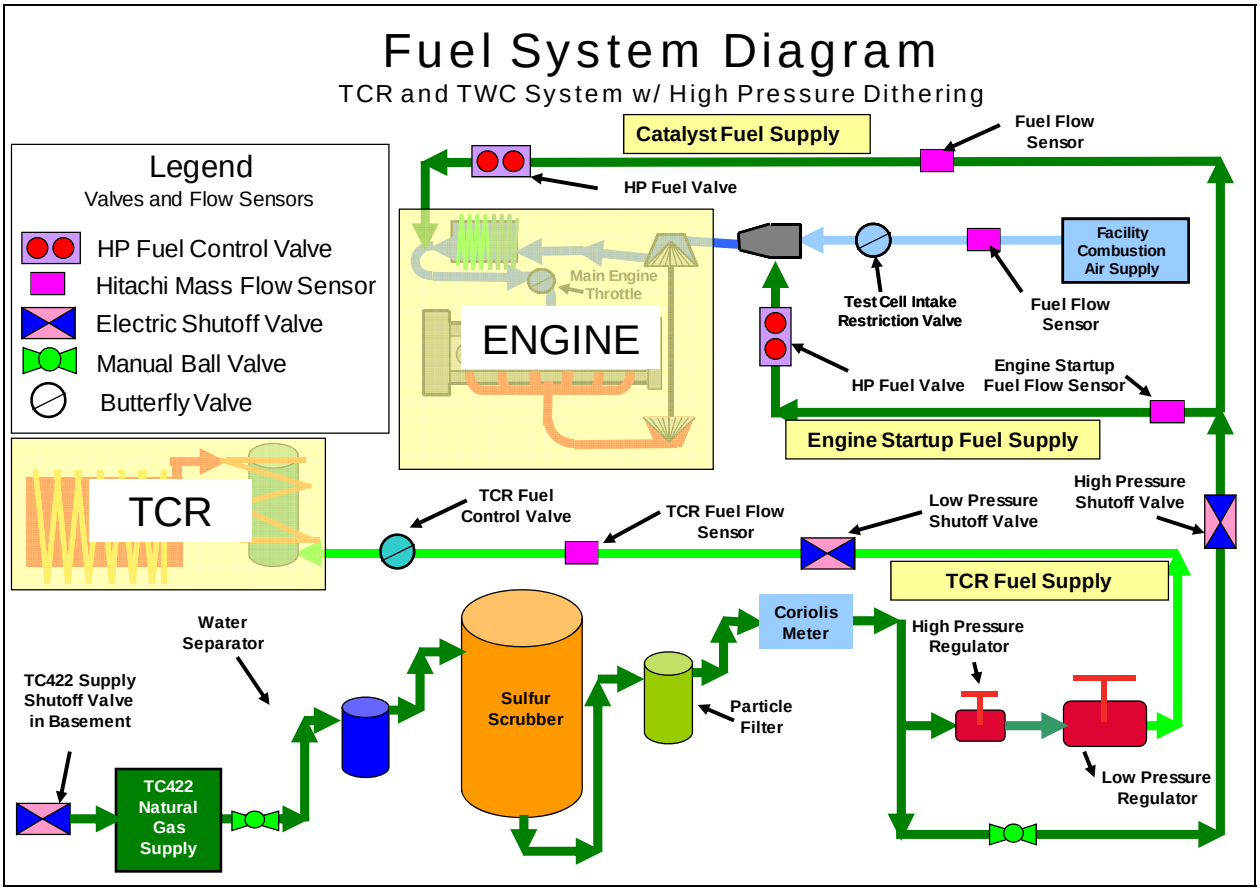

3.4 Measuring Parameters

The following parameters will be measured to characterize the TCRS performance:

- Natural gas flow rate and composition (CH_4, CO_2, N_2, and higher hydrocarbons)
- Sulfur content in natural gas before and after the sulfur scrubber
- Natural gas temperature and pressure before and after the natural gas pre-heater
- Exhaust gas recirculation flow rate
- Exhaust gas temperature, pressure, and composition after the TWC
- Exhaust gas temperature and pressure after the recuperative reformer
- Natural gas/exhaust gas mixture temperature, pressure, and composition before the recuperative reformer
- Reformed fuel temperature, pressure, and composition after the reformer. Measuring components of the reformed fuel should be H_2, CO_2, CO, O_2, N_2, CH_4, C_2H_6, C_3H_8, i-C_4H_{10}, n-C_4H_{10}, i-C_5H_{12}, n-C_5H_{12}, and C_6H_{14}+

Natural gas reforming rate and TCRS energy ratio will be estimated based on the measured reforming fuel composition before and after recuperative reformer.

3.5 Test Procedure Followed

The experimental set-up allowed for precise measurement of the temperature of the exhaust gas/natural gas mixture entering the reformer. Exhaust gas from the engine was used as a heat source to support the reforming reaction. De-sulfurized natural gas was supplied to the recuperative reformer and measured by a flow meter. Reformed fuel from the recuperative reformer was cooled down to ~140°F and sent to the engine. During each test run, the reformed fuel composition was continuously analyzed by a micro-GC.

Operating the TCRS in the Cummins QSK19G engine test cell requires a special start-up procedure and engine operation procedure during transition from starting the engine to engine operation at design conditions. The engine may start with low EGR fraction (~28 percent) when it's cold. The target is ~35 percent EGR when the engine is heated up and the fuel is reformed.

The following procedure was developed to operate the engine at start up and transient period:

- Supply 100 percent fuel to the engine bypassing the recuperative reformer.
- Start the engine with 100 percent fuel going directly to the engine with low EGR fraction (for example, 28 percent EGR) as for the baseline case without TCRS.
- Preheat the engine and recuperative reformer so that the reformer or catalytic inserts in the reformer would have temperature above ~800°F.
- Split the fuel and start supplying portion of the fuel to the TCRS, for example 5 percent fuel goes to recuperative reformer (natural gas pre-heater) and 95 percent fuel goes to the engine.
- Increase EGR fraction up to a level to maintain stable operation of the engine to prevent knock and misfire.
- Gradually increase the fuel split and EGR fraction maintaining stable operation of the engine before 100 percent fuel is supplied to the TCRS.

The reformed fuel composition during the transient period will be different than it is predicted by the model described in Chapter 3, Section 3.2.4. Another model has been developed in order to simulate performance of 331 kWe engine TCRS to predict the engine performance and hydrogen yield during the transient period. Approximation functions for TCRS energy ratio and H2 content in the reformed fuel are shown in Table 3. These approximation functions can be used to operate the engine during the transient period of the engine operation.

When the TCRS is receiving 100 percent fuel then the main model (Tables 1 and 2) should be used to predict performance of the 331kWe TCRS.

Approximation functions for TCRS energy ratio and H2 content in the reformed fuel are estimated based on the data in Table 2 earlier and are shown in Table 11. These approximation

functions can be used to operate the TCRS and engine during the full-scale test and field operation.

Table 11: Approximation Functions for TCRS Energy Ratio and H2 Content in Reformatted Fuel - Cummins 331kw Engine During Load and Thermal Transients

I. TCR energy ratio	
$y=a_0+a_1*x_1+a_2*x_2+a_3*x_1^2+a_4*x_2^2+a_5*x_1^3+a_6*x_2^3+a_7*x_1*x_2+a_8*x_1^2*x_2+a_9*x_1*x_2^2$	
y = TCR energy ratio; y > 1	
$x_1 = T_{Reformed\ fuel}/1000$; $T_{Reformed\ fuel}$ = 700F-1000F - reformate outlet temperature	
x_2 = LN(Natural gas/EGR volume ratio). Natural gas/EGR = 0.025-0.336 SCFH/SCFH	
a_0=	1.9493E+00
a_1=	-2.4110E+00
a_2=	3.8712E-01
a_3=	1.8528E+00
a_4=	3.5522E-02
a_5=	-3.6069E-01
a_6 =	1.5057E-03
a_7 =	-6.6241E-01
a_8 =	2.5710E-01
a_9 =	-2.2037E-02
II. Hydrogen content	
$y=\exp(a_0+a_1*x_1+a_2*x_2+a_3*x_1^2+a_4*x_2^2+a_5*x_1^3+a_6*x_2^3+a_7*x_1*x_2+a_8*x_1^2*x_2+a_9*x_1*x_2^2)$	
y = H2/Natural gas, % mass; y>0	
$x_1 = T_{Reformed\ fuel}/1000$; $T_{Reformed\ fuel}$ = 700F-1000F - reformate outlet temperature	
x_2 = LN(Natural gas/EGR volume ratio). Natural gas/EGR = 0.025-0.336 SCFH/SCFH	
a_0=	-8.7247E+00
a_1=	2.4662E+01
a_2=	1.6594E+00
a_3=	-2.2849E+01
a_4=	2.9789E-01
a_5=	8.4324E+00
a_6 =	1.0392E-02
a_7 =	-4.5807E+00
a_8 =	2.1606E+00
a_9 =	-3.0716E-01

3.6 Data Analysis and Quality Assurance Procedures Followed

Testing was conducted on the baseline recipe first to determine if the engine configuration chosen was capable of meeting desired performance of the engine. Testing of the engine at baseline conditions indicated that it was capable of meeting the performance requirements when running on natural gas and about 28 percent EGR.A measurement system analysis was conducted to understand the repeatability of the critical measurements obtained by the system. The measurement system analysis provides statistical error bars for the measurements provided by the system. The measurement system analysis was split into two sections, inputs and outputs. The coefficient of variance was used to assess the repeatability of the key measurements. To minimize the coefficient of variance the data collection time was increased from 2 minutes to 10 minutes which provided more repeatable average data point values for a given operating condition. The increased test point averaging time was required because of the dithering used on the engine to maximize CO and NOx conversion efficiency of the TWC. The coefficient of variance data in the subsequent measurement system analysis employed the 10min averaging time per point repeated twice per hour over approximately 22hrs.

3.6.1 Demonstration Test of Combined TCR/Engine/After Treatment System (Task 4.2)

The goal of this task is to operate the combined TCR, Advanced QSK19G Engine, and after treatment system for a 500-hour demonstration test to document the impact of hydrogen enhanced combustion on critical engine components and catalysts while also measuring the performance and emissions capability of the optimized system. Results from this task will provide the basis for proposing commercial demonstrations of the combined TCR/Engine/After treatment system in California.

The Contractor shall:

- Procure, measure, and install new critical engine components including, but not limited to:
    - Pistons;
    - Rings;
    - Wrist pins;
    - Cylinder liners;
    - Intake/exhaust valves and seats;
    - Camshaft;
    - Turbocharger;
    - After cooler;
    - Connecting rod bearings;
    - Spark plugs.
- Conduct a 500-hour endurance test under the optimal operating condition;
- Obtain full system data once each hour of operation;

- Determine performance deterioration characteristics of TCR, base engine, and after treatment systems;
- Measure and track lube oil consumption of engine;
- Upon completion of 500-hour endurance, conduct engine tear down, and determine:
    - Wear on pistons, rings, liners, wrist pins, recession of intake and exhaust valves, valve stem wear, turbocharger, connecting rod bearings.
    - Obtain quantitative chemical analyses of:
        - Deposits that may build up within intake system;
        - Lube oil;
        - TCR produced reformate fuel;

Due to problems encountered during the execution of Task 4.1, it was not possible for Cummins to complete this 500 hour endurance test.

CHAPTER 4:
Project Results

4.1 TCR System Development

4.1.1 Laboratory Evaluation of Recuperative Reformer (Task 2.1)

A proposed test matrix for lab evaluation of recuperative reforming using recycled exhaust gas was prepared and submitted to the CEC Contract Manager. That test matrix (shown as Table 12) included four independent variables, namely, reforming temperature (800-1000F), natural gas flow rate (2.5-3lb/hr), air flow rate (45.2-52.8lb/hr; or excess air), and exhaust gas recirculation (EGR) fraction (26-40 percent) required to supply steam and CO2 for reforming natural gas.

Table 12: Proposed Test Matrix for Lab Evaluation of Recuperative Reformer

Test No.	T_{ref}, F	M_{gas}, lb/hr	M_{air}, lb/hr	EGR, %	M_{EGR}, lb/hr
1	900	2.9	48.9	26.0	17.2
2	1000	2.7	48.0	26.0	16.9
3	800	2.7	45.2	26.0	15.9
4	900	2.9	50.3	33.0	24.8
5	900	2.9	48.9	33.0	24.1
6	800	2.7	48.0	40.0	32.0
7	800	3.0	49.8	40.0	33.2
8	1000	3.0	49.8	40.0	33.2
9	1000	2.9	48.9	33.0	24.1
10	800	3.0	52.8	40.0	35.2
11	900	2.9	47.4	33.0	23.3
12	800	2.7	48.0	26.0	16.9
13	800	3.0	49.8	26.0	17.5
14	900	2.9	48.9	33.0	24.1
15	800	2.7	45.2	40.0	30.2
16	900	3.0	51.3	33.0	25.3
17	1000	2.7	45.2	40.0	30.2
18	900	2.7	46.6	33.0	23.0
19	800	2.5	44.0	26.0	15.5
20	1000	3.0	52.8	26.0	18.6
21	1000	2.7	48.0	40.0	32.0
22	1000	3.0	52.8	40.0	35.2
23	1000	3.0	49.8	26.0	17.5
24	800	2.9	48.9	33.0	24.1
25	1000	2.7	45.2	26.0	15.9
26	900	2.9	48.9	40.0	32.6
27	900	2.9	48.9	33.0	24.1

Trial experiments with nickel catalyst on ceramic support were conducted to determine whether the proposed conditions were feasible. The natural gas reforming rate as compared with equilibrium state of the reforming mixture was estimated at given flow rates and temperatures. The catalyst surface was visually inspected after each test in order to determine if carbon deposited on the surface. The test plan was adjusted as needed during the experiments to account for unexpected problems or discoveries.

The test data for exhaust gas reforming of natural gas are shown in Table 13. No catalyst was used in the tests Nos.1 and 2. This data serves as a baseline for reforming without catalyst. Nickel pre-reforming catalyst was used in the tests Nos.3-8, and the Ni-Rh catalyst supplied by Catacel Corporation was used in the tests Nos.9-15.

Results of the tests Nos. 1 and 2 indicated that non-catalytic reforming of natural gas in the reformer is not effective at tested temperatures (<1100°F) and residence times. Chemical reaction rates without a catalyst are too low in order to provide any natural gas conversion. Tests 3-15 demonstrate that both Ni and Ni-Rh catalysts increase the reactions rates. However, due to a better contacted area, the Ni-Rh catalyst on corrugated foil is more efficient in comparison with the Ni catalyst on ceramic.

Table 13: Test Data for Exhaust Gas/Natural Gas Catalytic Reforming

Test No.	1	2	3	4	5	6	7	8	9	10	11	12	13	14	15
Catalyst	none	none	Ni	Ni	Ni	Ni	Ni	Ni	Ni-Rh	Ni-Rh	Ni-Rh	Ni-Rh	Ni-Rh	Ni-Rh	Ni-Rh
Natural Gas flow, scfh	15	9.9	18.8	20.8	7.9	7.9	15.7	11.9	10	10	16.7	11.9	11.9	28.6	40.8
Exhaust Gas flow, scfh	143	92	144	140	72	187	56	55	166	166	166	119	119	257	256
T_2, F	660	692	835	866	698	691	728	707	733	695	683	680	678	689	691
T_3, F	742	676	995	996	531	530	583	569	666	544	613	562	549	741	754
T_4, F	1260	1283	1529	1556	1110	1130	1190	1203	1194	974	1038	981	922	1202	1231
T_5, F	728	716	1019	1015	604	607	639	623	669	579	608	556	544	677	684
T_6, F	1073	1075	1428	1398	974	991	979	1003	924	794	806	766	767	853	852
T_7, F	1127	1137	1500	1475	1038	1050	1049	1051	1024	858	879	818	805	970	971
T_8, F	1122	1115	1464	1447	1007	1011	1025	1014	1019	880	907	824	803	1000	1005
T_9, F	1233	1269	1573	1578	1127	1142	1171	1192	1133	950	988	911	878	1094	1101
Test Results	**Reformed fuel composition, % volume (dry)**														
H_2	0.1	0.0	21.1	21.8	2.8	6.9	14.4	16.5	9.8	6.6	7.9	6.2	5.6	8.2	9.6
O_2	0.4	0.5	0	0	0	0	0	0	0	0	0	0	0	0	0
N_2	77.8	75.5	57.8	56.5	71.7	67.6	48.1	49.8	69.4	75.8	70.8	72.4	72.9	70.6	65.6
CH_4	11.7	13.3	5.5	6.1	12.6	13.2	25.0	19.7	4.7	5.5	9.4	9.9	10.0	8.7	12.7
CO	0.1	0.1	9.0	9.4	1.0	1.7	3.7	4.7	5.5	0.7	1.0	0.6	0.5	1.6	1.9
CO_2	9.3	10.1	6.4	6.1	11.6	10.3	8.2	8.8	10.5	11.4	10.8	10.8	10.8	10.6	9.9
C_2H_4	0	0.000	0.033	0.033	0.001	0.000	0.000	0.004	0.000	0.000	0.000	0.000	0.000	0.000	0.000
C_2H_6	0.6	0.320	0.087	0.101	0.302	0.293	0.532	0.447	0.073	0.084	0.139	0.129	0.135	0.167	0.248
C_3H_8	0	0.165	0.005	0.006	0.036	0.035	0.061	0.049	0.011	0.012	0.017	0.019	0.018	0.027	0.039
i-C_4H_{10}	0	0.020	0.000	0.000	0.001	0.002	0.005	0.001	0.000	0.001	0.001	0.001	0.001	0.003	0.004
n-C_4H_{10}	0	0.042	0.000	0.000	0.000	0.000	0.000	0.000	0.000	0.000	0.000	0.000	0.000	0.005	0.007
C_2H_2	0	0.000	0.000	0.052	0.000	0.000	0.000	0.000	0.000	0.000	0.000	0.000	0.000	0.000	0.000

Analysis of the test data (Table 13) indicated that in some cases the temperature distribution along the reformer tubes is non-uniform especially for nickel catalyst. It is not critical for the

reforming process but complicates using simple chemical equilibrium calculations.
It begs the question "Which temperature can be taken as a reference reforming temperature for equilibrium estimation in order to compare this data with the equilibrium prediction?" Nevertheless, this data could and was used to develop a chemical kinetic model for CFD FLUENT software because the program allows one to describe such kind of flows with chemical reactions and non-uniform flow temperature distribution. Equilibrium estimations showed that the temperature conditions realized in the tests would correspond to the reforming temperature in the range of 800°F -1000°F.

Analysis of the experimental results for nickel catalyst yielded the following observations:

- Carbon deposition on the nickel catalyst inserts was observed at EGR fraction as high as 55 percent. Therefore, no attempt was made to conduct any test with this catalyst at a lower EGR fraction within the SESI target operational range of 26 percent to 40 percent because carbon deposition would be expected.

After switching to the Ni-Rh catalytic insert, the following observations were made:

- No carbon deposition was observed at EGR fraction of ≈35 percent or higher. As expected, the rhodium-containing (Ni-Rh) catalyst showed better conversion without carbon deposition than the nickel catalyst.
- Because of the increased potential for carbon as the EGR fraction is lowered, it was decided to perform extended tests at EGR fractions of 35 percent or more. The reasoning was that the data obtained at the higher EGR fraction would still provide adequate experimental data for developing the chemical kinetic model which could be used to support design of the pilot and full scale reformers required for the project.

It was decided to have Catacel Corporation conduct long-term testing with precious metal catalyst formulations using their experimental furnace and confirm that carbon deposition can be avoided at conditions that simulate EGR fractions of 26-35 percent with low reforming temperature (800°F -1000°F). This testing would be conducted in parallel with work to scale up the TCR experimental rig for testing at 50-75 kWe (Task 2.2).

Based on the experimental results and use of a theoretical model of the reforming reactions, preliminary predictions of TCR system performance were made. It was determined that the TCR system efficiency (or TCR Energy Ratio) depend upon the reforming temperature and Exhaust Gas Recirculation (EGR) fraction.

Figure 38 shows the TCR system efficiency gain versus EGR fraction and reforming temperature in the operational range of the Cummins QSK19 stoichiometric engine. As can be seen from the figure, a 6 percent TCR efficiency gain can be reached, for example, at 900°F reforming temperature with EGR fraction equal ~34 percent. In order to obtain 8 percent TCR efficiency gain at the same EGR fraction, the reforming temperature should be at least 950°F.

Figure 38: TCR Energy Ratio Versus EGR and Reforming Temperature

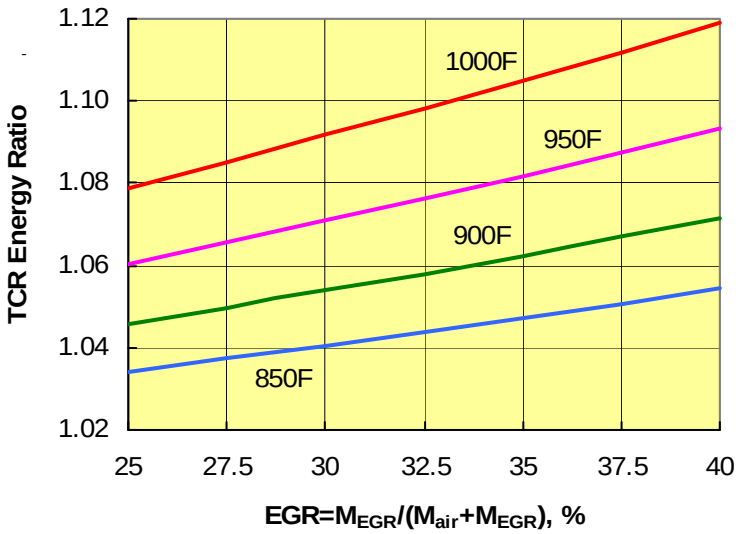

A higher reforming temperature would also lead to higher hydrogen content in the reformed fuel. Figure 39 shows the predicted TCR system efficiency gain versus hydrogen/carbon ratio (H/CR) for combustion portion of the reformed fuel. As can be seen from the figure, the H/CR does not always increase with the higher reforming temperature. It appears to start decreasing when the reforming temperature is greater than ~930°F. It was determined that this predicted result deserved additional study during subsequent scale-up and development tasks.

Figure 39: TCR Energy Ratio Versus Hydrogen/Carbon Ratio (H/CR) for Burnable Part of Reformed Fuel at EGR=35%

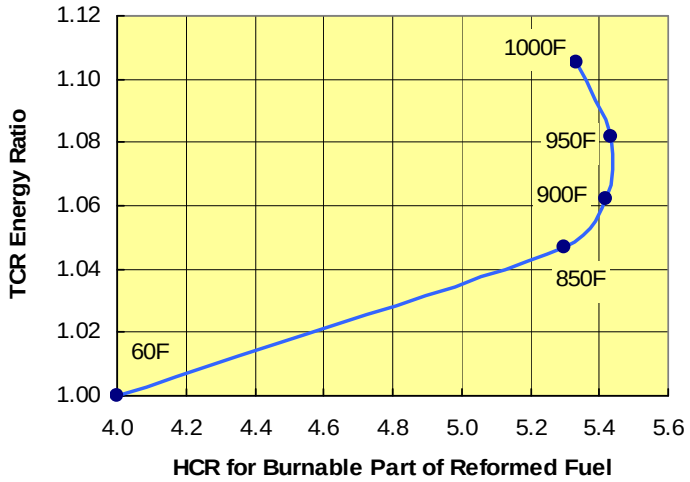

4.1.2 Pilot Scale TCR System Testing (Task 2.2)

Pilot-Scale Reformer Single Tube Testing

For preliminary performance testing, one of the four reformer (tubes) sections was disconnected from the pilot-scale reformer and equipped with proper instrumentation and piping. Then the single tube of the reformer was installed on the existing TCR test rig. The test rig was used as a source of hot flue gases comparable to the engine exhaust gas conditions.

Objectives of the testing with the reformer single tube were to check the reforming reactor performance (heat transfer and natural gas conversion), observe if any carbon deposits on catalytic surface, and discover other possible problems in the reactor prior installing and testing the reformer in the TCR system with the lab engine. Another purpose of the experiment was to evaluate the catalyst performance at higher space velocity than the design value of $3500hr^{-1}$.

In conducting the tests, attempts were made to simulate thermal and flow conditions similar to the expected Cummins 331 kWe engine and TCR operating conditions, namely:

- Exhaust gas inlet temperature to reformer: 1000°F -1200°F
- Reforming fuel (natural gas/exhaust gas mixture) inlet temperature: 800°F-1060°F
- Exhaust Gas Recirculation mass fraction ($EGR=M_{EGR}/(M_{EGR}+M_{AIR})$): 25%-35%
- Space velocity: $\geq 3500hr^{-1}$
- Excess O_2 in exhaust: less than 1% by volume
- Natural gas composition, vol.: H_2=0.1%, CO_2=0.89%; N_2=1.17% CH_4=95%, C_2H_4=0.008%; C_2H_6=2.39%; C_3H_8=0.294%; C_4H_{10}=0.09% C_5H_{12}=0.029%; C_6H_{14}=0.029%

A general schematic of the single tube test set up is shown in Figure 40. Pre-heated fuel (de-sulfurized natural gas) was supplied to the mixer through mass flow controller (Brooks Instrument 5853S).

Figure 40: Flow Diagram for Preliminary Testing of the Pilot-Scale Reformer Tube

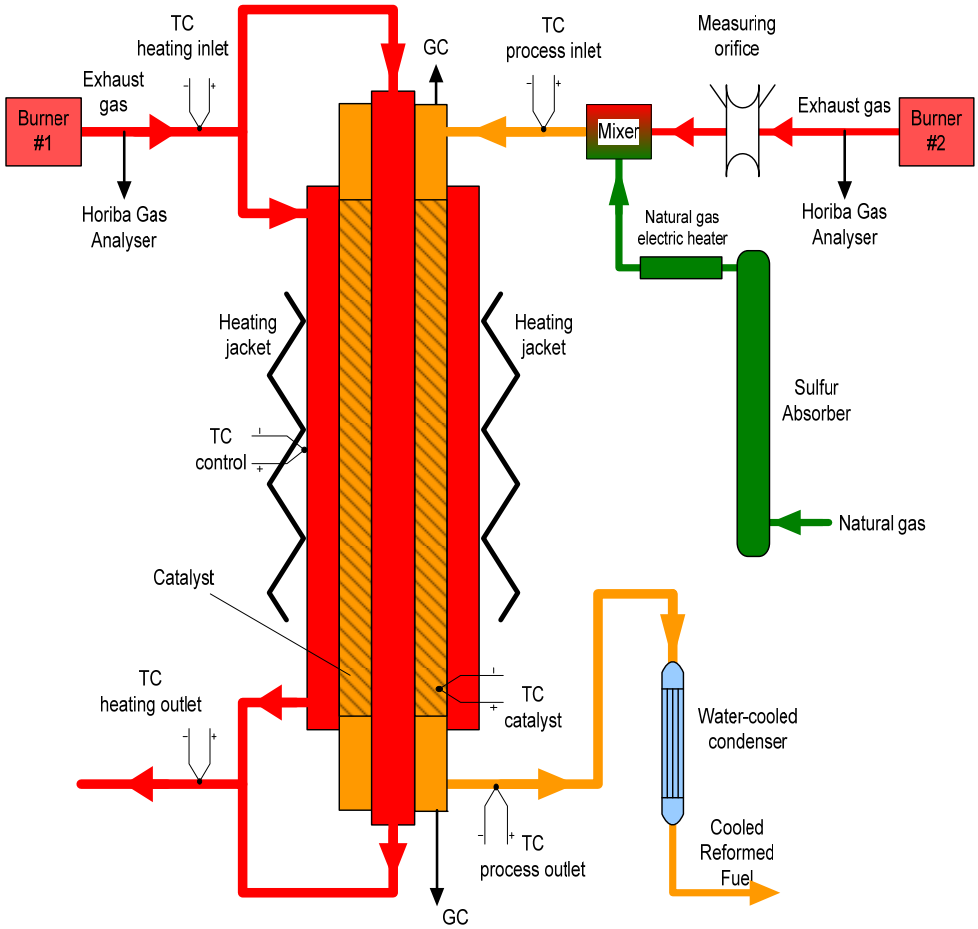

The natural gas was preheated by an electrical heater and mixed with simulated engine exhaust gas produced by the natural gas burner (burner #2 in Figure 40) installed on the test rig. The exhaust gas flow rate into the reformer was controlled by adjusting a damper in the stack and was measured by an orifice plate installed in 1½" pipe. The exhaust gas composition was measured by a portable Horiba gas analyzer. The reforming fuel (exhaust gas/natural gas mixture) composition was monitored at the reformer inlet and outlet by a portable gas chromatograph (Varian CP-4900). Because the natural gas and exhaust gas in the catalytic section is cooling (down due to endothermic reaction) as it flows through the tube in tube reactor, additional heat to the reaction is supplied from the exhaust gas stream generated by a second burner (burner #1 in Figure 40) installed at the same test rig. Natural gas and air flow rates to this burner are measured by vortex flow meters (Sierra Instruments). The heating

exhaust gas flow rate is a sum of the natural gas and air flow rates. Reformed gas after the reformer is cooled to 60 – 70 °F, and, after condensate separation, was burned in the disposal burner (Figure 41, right). The reformer mounting at the TCR test rig is shown on Figure 41, left.

Figure 41: Single-Tube Thermo Chemical Reformer Installed at the GTI Heat-Treat Furnace (Left) and Burner for Reformed Fuel Disposal (Right)

The results of the experiments confirmed that the quantity of heat transferred between simulated engine exhaust gas and the natural gas/exhaust gas mixture within the catalytic section was sufficient to sustain endothermic reforming reactions. This was confirmed by estimating heat transfer balance between the reforming fuel and exhaust gas. Chemical reaction heat was also taken into account. In all experiments, the exhaust gas temperature decreased from the reformer inlet to outlet, which confirms that the heat is transferred from the exhaust gas to reforming fuel. As mentioned earlier, an electrical heating jacket prevented heat losses from the reactor to environment.

Gas analysis of the reformed fuel composition (leaving the single tube) revealed that the reforming rate of methane (major component of natural gas) and the hydrogen fraction of the reformed fuel were in a good agreement with predictions. Figure 42 shows an example of experimental conditions (temperature, flow rates) and reforming fuel composition before and

after the reformer. The reforming fuel (exhaust gas/natural gas mixture) corresponds to an EGR mass fraction equal to 35.8 percent based upon the following calculation:

$$\text{EGR mass fraction} = M_{EGR}/(M_{EGR}+M_{AIR})$$

M_{EGR} is exhaust gas mass flow rate for reforming and M_{AIR} is the air mass flow rate estimated from stoichiometric conditions for reforming natural gas. This EGR fraction corresponds to exhaust gas/natural gas volume ratio V_{EGR}/V_{NG} of 5.86 and mass ratio M_{EGR}/M_{NG} of 9.59. Here, V_{EGR} and V_{NG} are exhaust gas and natural gas volume flow rates in the reforming mixture, M_{EGR} and M_{NG} are exhaust gas and natural gas mass flow rates in the reforming mixture.

For this case the hydrogen content in the reformed fuel was 9.07 percent (wet) at mean reforming temperature equal 860°F. This is within the predicted hydrogen content for this temperature level. This result was obtained at a space velocity equal to 5594 hr^{-1} which is about 1.6 times the design value of 3500 hr^{-1}. These findings suggest that at the design reforming temperature of about 950°F, it should be possible to achieve the target energy gain with substantially less catalyst than currently used.

Figure 42: Reformer Reactor Single Tube at Tested Conditions

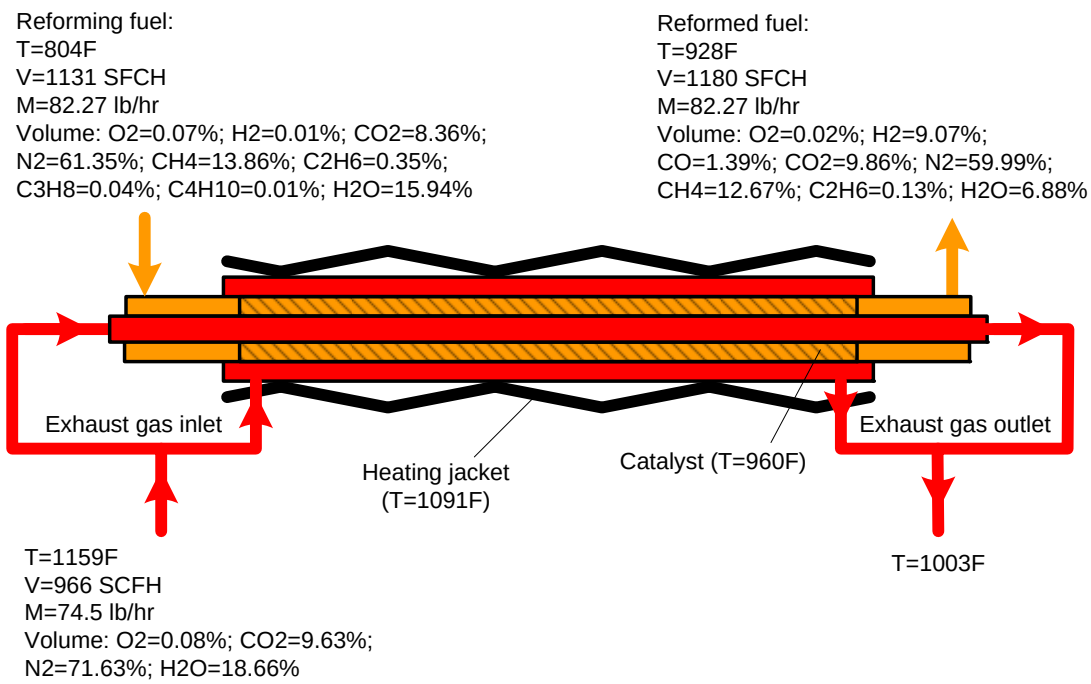

After the tests, the reformer tube was uninstalled from the experimental rig, and internal surfaces of the tube were visually inspected for carbon deposition. There was no apparent deposition on the catalyst surface. (Figure 43) However, there was some carbon observed on the surface closest to the inlet and outlet flanges. These deposits may have resulted from the lower temperatures (due to higher heat losses) at the flanges.

Figure 43: Inspection of Catalyst at the Reformer Inlet (Left) and Outlet (Right) After Single Tube Tests and Carbon Deposited at Reformer Outlet (Bottom)

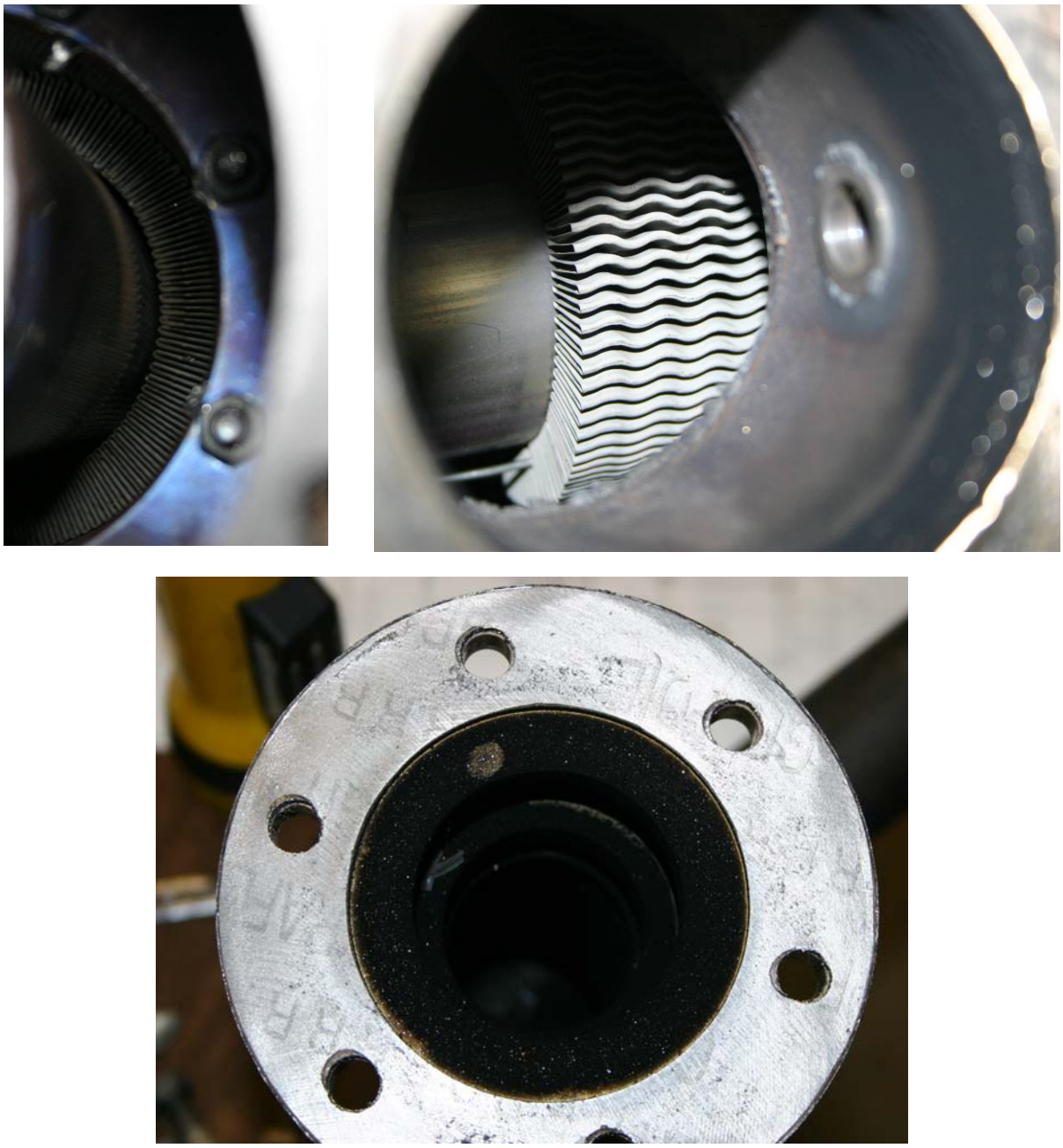

Following single tube tests, the pilot-scale (four-tube) TCR system was installed on the 50 kWe GTI single cylinder research engine test platform. Reformer connections to the engine system are shown on Figure 44. Locations of instrumentation are provided in Figure 45. Sampling port locations are shown in Figure 46.

Figure 44: Pilot-Scale TCR System Arrangement for GTI 50 kWe Stoichiometric Engine with EGR and Exhaust Gas Reforming Capability

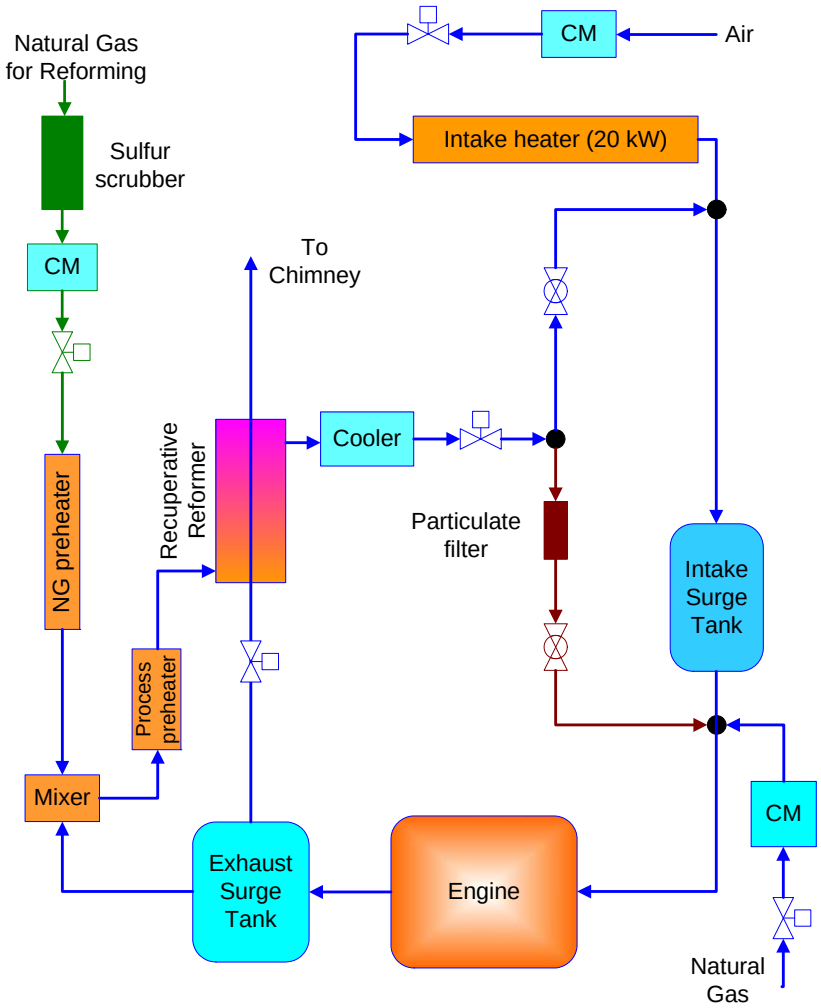

For recuperative reforming tests on the GTI research engine, exhaust gases from the engine were piped through the exhaust surge tank with system pressure controlled by a back-pressure valve installed downstream of exhaust surge tank. Process inlet of the recuperative reformer was connected to exhaust surge tank, so the reforming process pressure would be equal to the pressure in the tank. Hot exhaust gases were directed into the reformer after the back-pressure valve, so that the pressure in the heating channels was near-atmospheric. De-sulfurized natural gas was preheated with an electrical heater up to about 450 ºF and then added to the process line. An inline mixer with two mixing elements (blades) ensured a homogeneous exhaust gas/natural gas mixture. The process mixture was preheated using an electric circulation heater to maintain the desired process temperature. Reformed fuel from the reformer was cooled down to 70 - 80 ºC.

A control valve installed downstream of the cooler maintained reformed fuel flow at the desired level. For closed-loop TCR/engine tests, the cooled reformed fuel was filtered and injected into the air intake line downstream of the intake surge tank. A baffle-style separator was located right before the fuel injectors to remove any particles or moisture from the reformed fuel.

Figure 45: Pilot-Scale TCR/Engine System Piping & Instrumentation Diagram

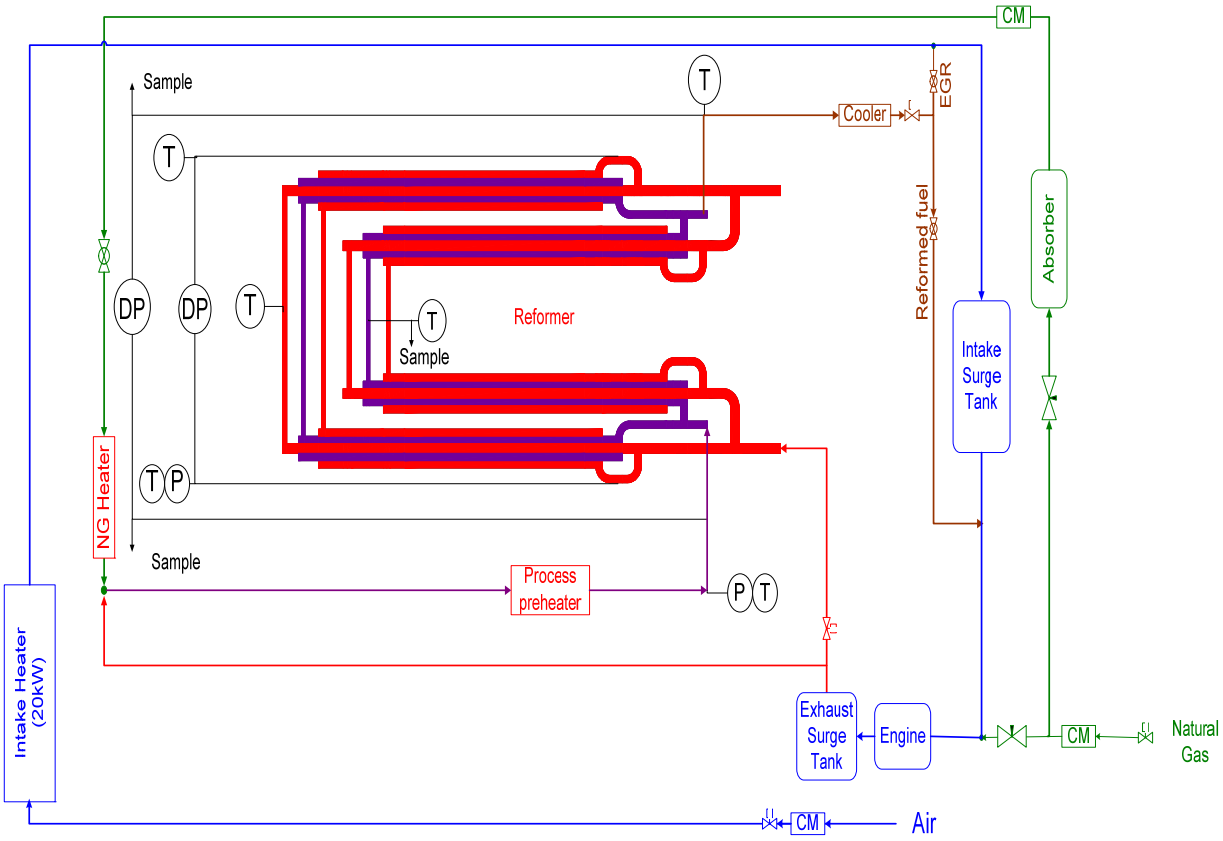

Figure 46: Recuperative Reformer Measuring Points

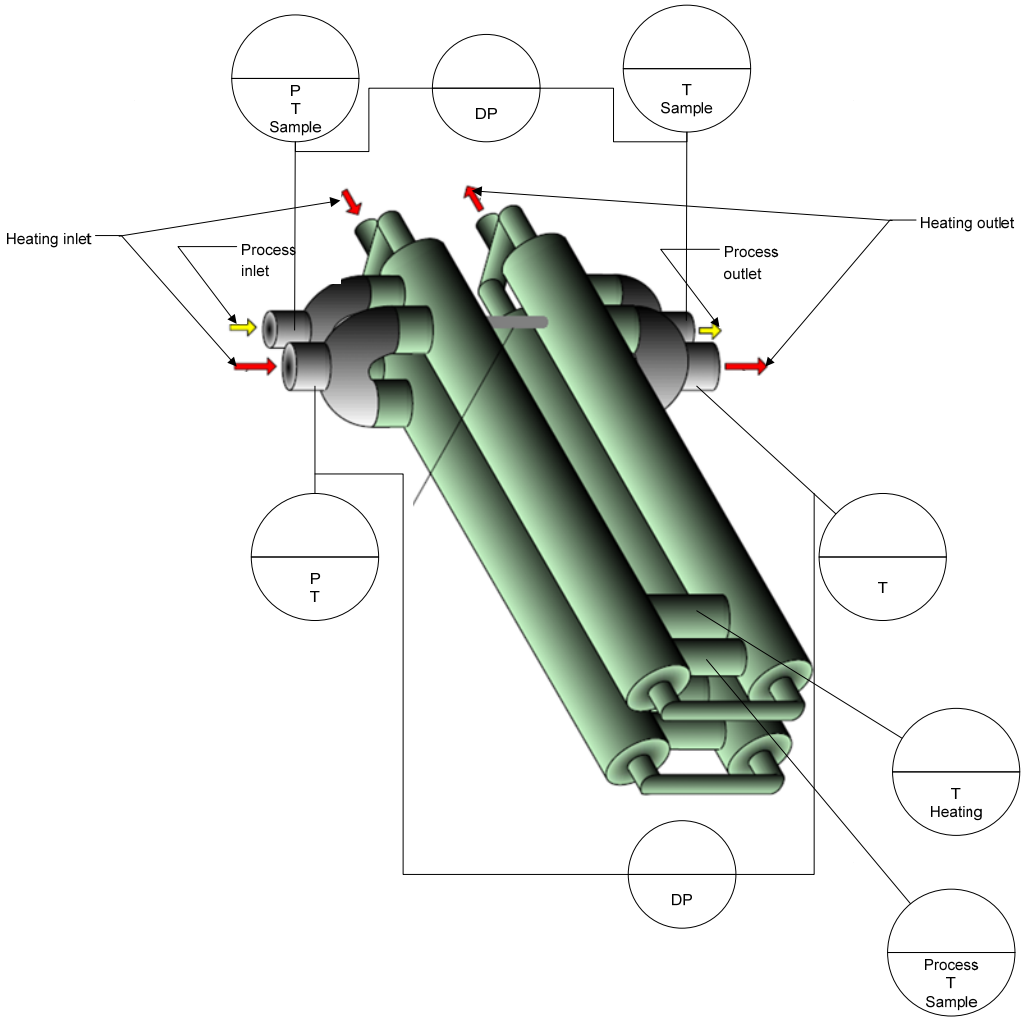

The recuperative reformer was mounted on a shelf attached to the GTI research engine unit as shown on Figure 47. Temperature controllers (Chromalox) for heating jackets and natural gas and process mixture heaters were mounted on separate unit shown on Figure 47 at the lower-left corner. Connection pipes were covered with thermal insulation. Additionally, some pipes were wrapped with electric heating tape to prevent heat losses on longer runs. Heating jackets wrapped around the reformer tubes provided constant reformer wall temperature to block heat losses from the process mixture.

Figure 47: Insulated TCR Installed on GTI Research Engine Unit

Natural gas used for reforming was de-sulfurized in a sulfur scrubber shown in Figure 48. The scrubber consists of three columns filled with sulfur absorbent supplied by Sud-Chemi.

Figure 48: Sulfur Scrubber for Natural Gas Desulfurization

Figure 49 shows the TCR system flow diagram with target levels of key parameters (flows, temperatures, and gas compositions) of the pilot-scale engine /TCR system. The reformer was designed to operate with natural gas mass flow rate up to 22 lb/hr, EGR mass fraction up to 35 percent, and target temperature of engine exhaust of 1100°F.

Figure 49: Pilot Scale TCR System Process Flow Diagram

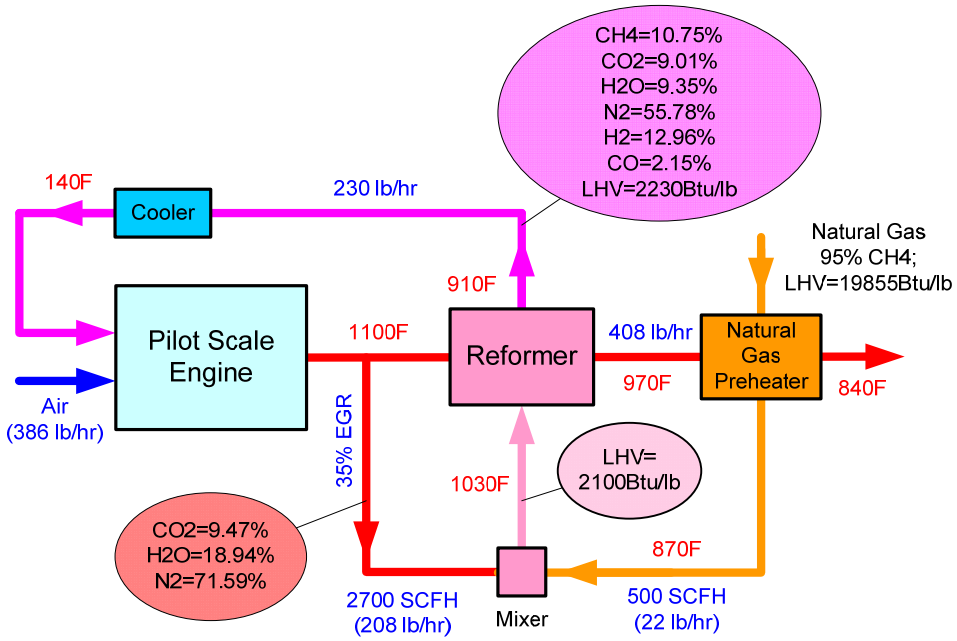

Figure 50 presents limits of test conditions that could be obtained on GTI test engine with the pilot-scale thermo-chemical recuperative reformer installed and operated in closed-loop manner (such as, reformed fuel produced by the RR was supplied to the air/fuel intake of the engine).

For Figure 50 the following test conditions are summarized: natural gas mass flow rate M_{NG}=5.25kg/hr, exhaust gas mass flow rate M_{EG}=59.73kg, exhaust gas recirculation mass flow rate M_{EGR}=29.61kg/hr resulting in EGR fraction – 26.7%, exhaust gas/natural gas mass ratio M_{EGR}/M_{NG}=5.64, air mass flow rate to engine M_{AIR}=81.30kg/hr.

Figure 50: Illustration of Pilot-Scale TCR/Research Engine System Test Conditions

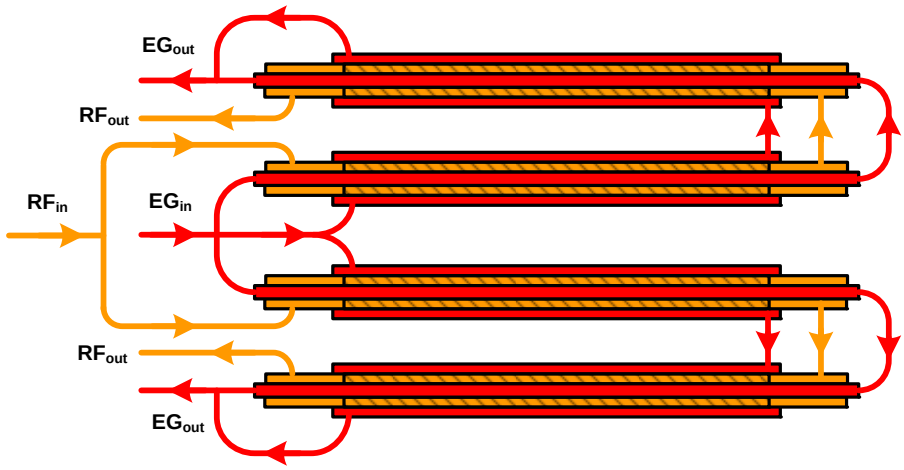

Exhaust gas inlet (**EG_{in}**): T=1101F; M_{EG}=59.73kg/hr

- Exhaust gas outlet (**EG_{out}**): T=1085°F
- Reforming fuel inlet (**RF_{in}**): T=1011°F; M_{RF}=34.86kg/hr; Volume composition: H_2=0.07%,
    - O_2=1.543%, N_2=62.16%, CH_4=28.21%, CO=0.17%, CO_2=7.79%,
    - C_2H_6=0.02%, C_3H_8=0.03%
- Reforming fuel outlet (**RF_{out}**): T=1043°F; Volume composition: H_2=11.58%, O_2=0%,
    - N_2=57.96%, CH_4=18.667%, CO=3.018%, CO_2=8.736%,
    - C_2H_6=0.02%, C_3H_6=0.013%

The maximum achievable exhaust gas recirculation rate of 26.7 percent was less than required to evaluate the full potential of the system under conditions similar to what is expected on the 331 kWe Cummins engine. The research engine combustion became unstable when higher levels of EGR were attempted leading to misfire. It was never possible to produce enough hydrogen in these tests to exploit the potential of using hydrogen enriched fuel to extend the EGR tolerance as documented by Cummins and others.

Unfortunately, modeling predicts that increasing the hydrogen content in the reformed fuel requires increasing exhaust gases flow rate into the process line of the reformer. Thus, to get initial stable engine operation with higher exhaust gases recirculation, it may be necessary to dope some hydrogen into reformed fuel at the startup.

Following the tests, the internal surfaces of the reformer tubes and catalyst were visually inspected for carbon deposition. There was no carbon observed on the catalyst surface or on the internal surfaces of the reformer tubes (Figure 51).

Figure 51: TCR Inlet (Left) and Outlet (Right) After Tests on 50 kWe Engine

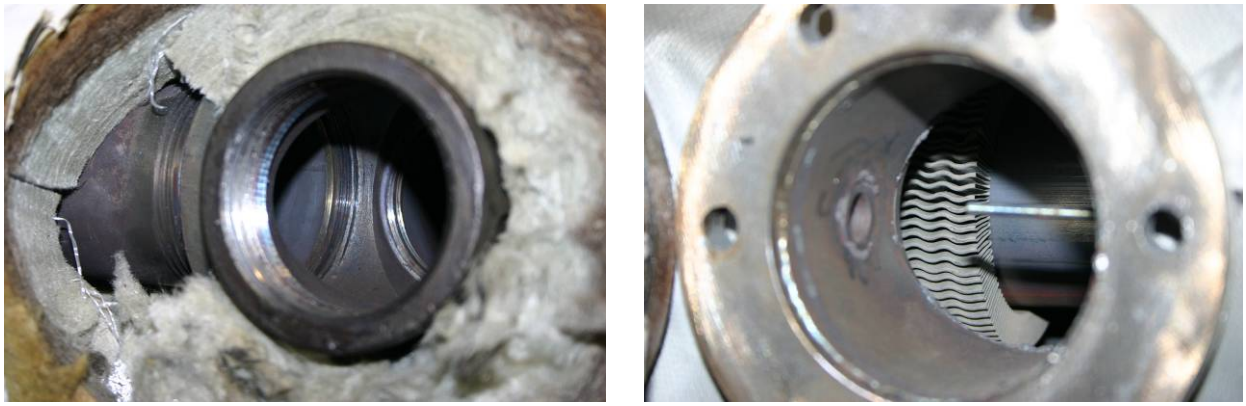

4.1.3 Development of Full-Scale TCR System for 331 kWe Engine (Task 2.3)

Based on the results of laboratory testing of single tube with catalyst and 50 kW engine TCRS the following predictions and conclusions were made for 331 kWe engine TCRS:

- Performance of the Nickel-Rhodium catalyst has been selected for use in the recuperative reformer of TCRS for 331 kWe engine. The catalyst was tested at design conditions (temperature, pressure, and residence time) and provided sufficient natural gas reforming rate and TCRS energy ratio.
- It was found that the TCRS energy ratio essentially depends on oxygen content in exhaust gas (Figure 52). For example, increasing oxygen content in the exhaust gas from 0 to 0.5 percent would decrease the TCRS energy ratio from 1.06 to ~1.05 at designed conditions. So the stoichiometric conditions of the engine with 0 percent oxygen in the exhaust gas would be preferable for higher reforming rate and TCRS energy ratio.

The TCRS energy ratio depends on reforming pressure. The higher the reforming pressure, the less efficient the reforming reaction is in the catalytic recuperative reformer (Figure 53).

Figure 52: TCRS Energy Ratio Versus Oxygen Content in Exhaust Gas (Reforming Temperature T_{ref}=900F, EGR Mass Fraction 35%, Reformer Pressure 5 Inches W.C.)

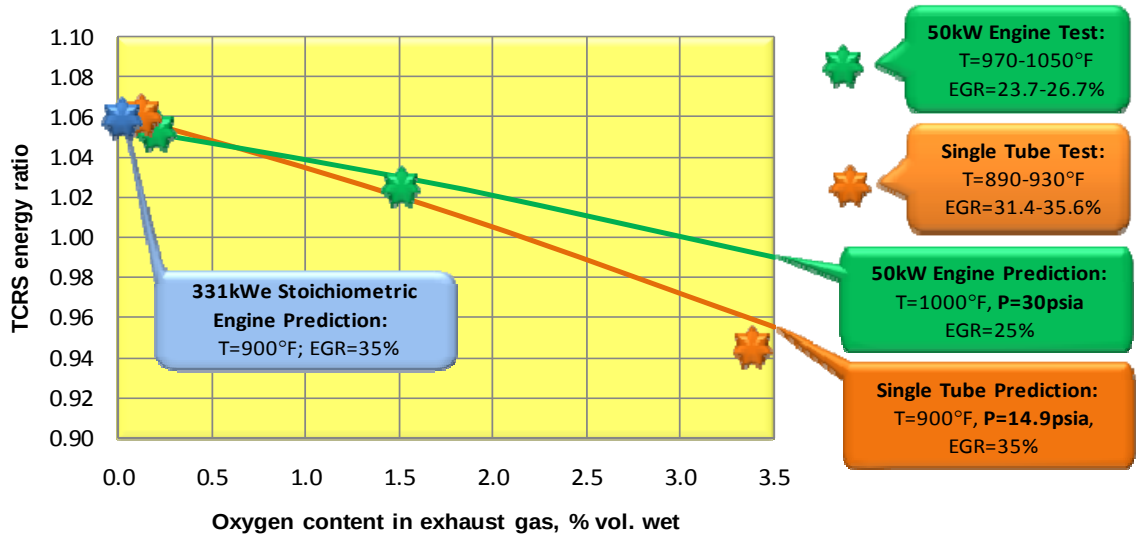

Figure 53: TCR Energy Ratio Versus Reformer Pressure (Reforming Temperature T_{ref}=900°F, EGR Mass Fraction 35%)

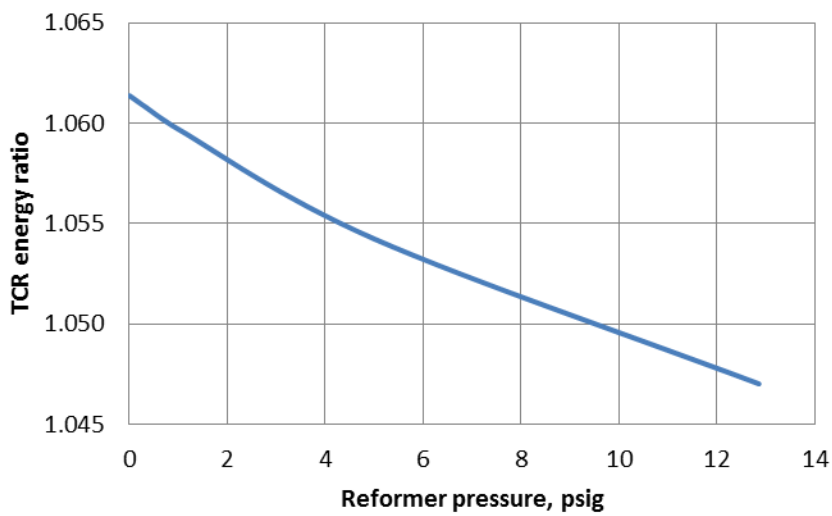

Modeled simulations of performance of 331 kWe TCRS are presented in detail in the interim report for Task 2.3 and are not included in this section of the final report.

Based on the measured EGR mass fraction and reformed fuel temperature at the reformer outlet the hydrogen content can be predicted using the approximation functions (Figure 54).

The hydrogen value can then be used to adjust parameters of the TCRS and engine during testing and operation.

Figure 54: Predicted Hydrogen Content in Reformed Fuel Versus EGR Fraction and Reforming Temperature

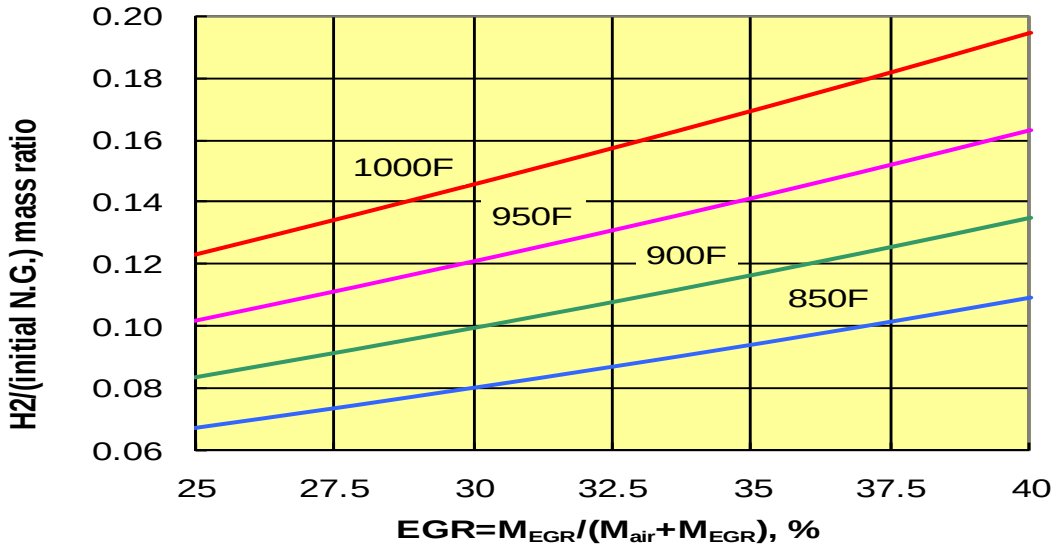

Based upon the design turbocharger outlet temperature of 1100 degrees F for the exhaust gas, and using heat transfer and chemical models developed and validated in Task 2.2 of the project, a conceptual design for the full-scale TCRS was developed. The conceptual design is depicted Figure 55 below. The recuperative reformer is executed as a tube and shell heat exchanger design with annular tubes and catalyst in the annulus between the tubes. For the conceptual design, the (pre-heated) natural gas and re-circulated exhaust gas mixture enters the reforming section at about 950°F and enters tubes that have catalytic inserts. Flue gas is supplied in a cross-flow manner on the outside of these tubes to provide heat necessary to sustain the endothermic reactions occurring within the tubes. With this conceptual design, the predicted temperature of the reformed fuel exiting the TCRS was about 930°F.

The flue gas exiting the TCRS (natural gas pre-heater) was estimated to cool to about 820°F.

There were also pressure drop considerations included in this conceptual design. The estimated pressure loss for reformer and natural gas pre-heater were as follows:

- Reforming fuel (channels with catalyst): 10 in. W.C. (0.36 psi)
- Exhaust gas flow: 13 in. W.C. (0.58 psi)
- Natural gas flow in the pre-heater: 10 in. W.C. (0.36 psi)

Figure 55: Conceptual Design of the 331 kWe Recuperative Reformer

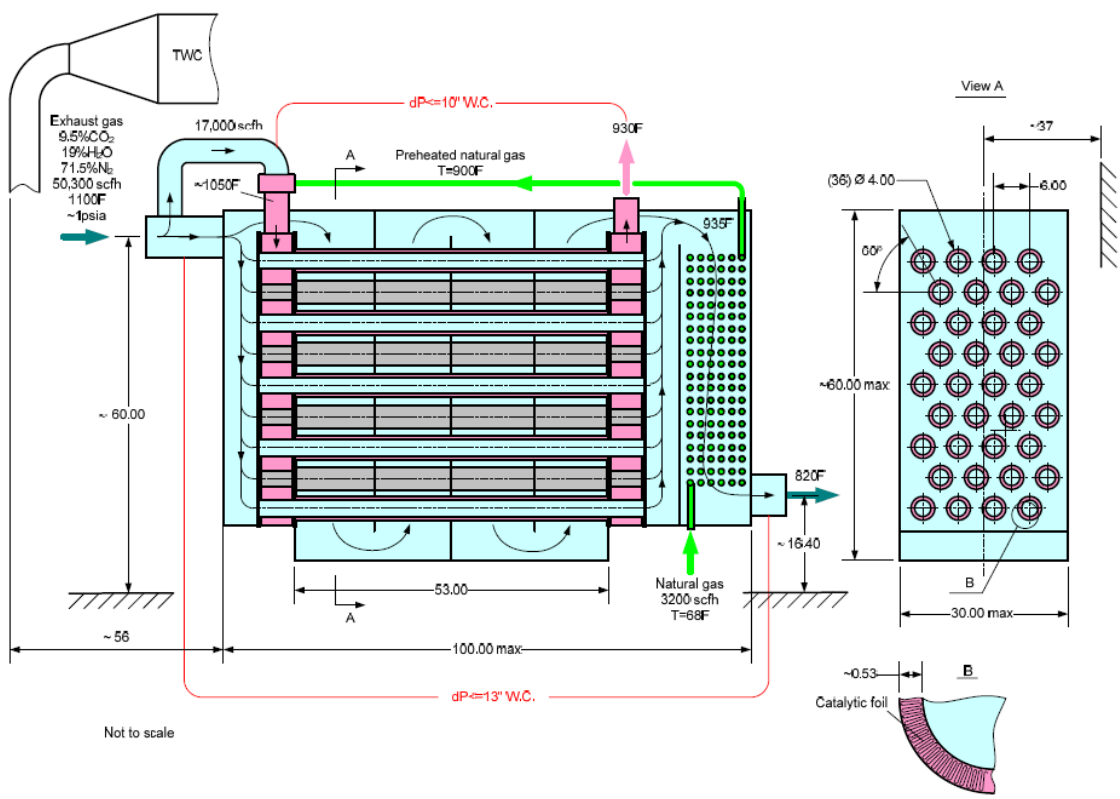

A purchase order was issued to Thermal Transfer Corporation to develop the detailed engineering design of the TCRS for the 331 kWe Cummins engine. Thermal Transfer Corporation, part of Hamon Group, is located near Pittsburgh, PA. After approval of the final engineering design, Thermal Transfer Corp. fabricated the 331 kWe TCRS, pressure tested it and shipped it to Cummins Technical Center. Details of the engineering design and fabrication are included in the Interim Report for Task 2.3.

4.2 Development of QSK19G Engine and After-Treatment System for Hydrogen-Enriched Fuel (Task 3)

4.2.1 Generate Project Work Plan for QSK19G Engine Development, Optimization, and Integration with TCR System (Task 3.1)

The work plan developed for this task was summarized earlier in this report under Section 2.2.1.

4.2.2 Hydrogen Enrichment Testing of Baseline QSK19G Engine Under Stoichiometric Conditions (Task 3.2)

Rather than repeat all the results included in the Interim Report submitted to the Energy Commission for Task 3.2, this section will summarize the critical functional response (CFR) versus EGR Fraction for the key performance parameters of NOx, combustion duration, unburned hydrocarbons and exhaust oxygen taken at 14Bar BMEP and 1200RPM. The heat release centroid was held constant at 17.5CAdegATDC. This data documents the effects of a change in EGR Fraction and hydrogen fraction for conditions that are most representative of the operating point that for which data is reported later under results for Task 4.2.The results for 18 bar BMEP were, for the most part, similar to those obtained at 14 bar BMEP.

The ranges used for the critical adjustment parameters (CAP) used during the test can be seen in Table 14.

Table 14: Ranges of CAP for 14bar BMEP Stoichiometric with EGR Testing

Stoich W/EGR Testing 14 Bar	
H2 Fraction	EGR Range
0%	23%-29%
3%	24%-31%
6%	25%-32.5%

The effect of EGR Fraction on NOx for 0 percent, 3 percent, and 6 percent hydrogen fractions can be seen in Figure 56.

Figure 56: NOx Versus EGR Fraction for 14bar BMEP Stoichiometric with EGR Testing

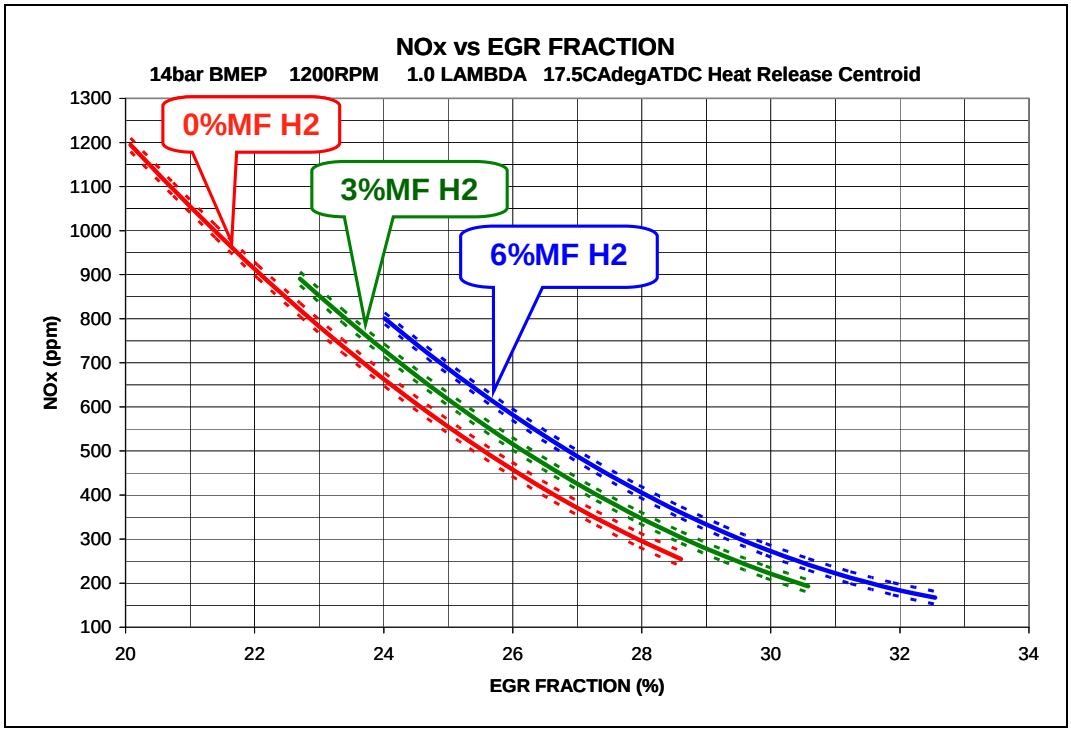

As the hydrogen fraction increases the NOx increases for a constant EGR Fraction. As the H2 fraction increases, the amount of EGR that the engine can tolerate increases, allowing for a lower NOx level to be achieved.

EGR fraction at the limit of combustion stability while operating at 14bar was observed to be as follows:

- 0% hydrogen: 28.5%
- 3% hydrogen: 30.5%
- 6% hydrogen: 32.5%

The effect of EGR Fraction on Combustion Duration for a given hydrogen fraction can be seen in Figure 57.

Figure 57: Combustion Duration Versus EGR Fraction for 14bar BMEP Stoichiometric with EGR Testing

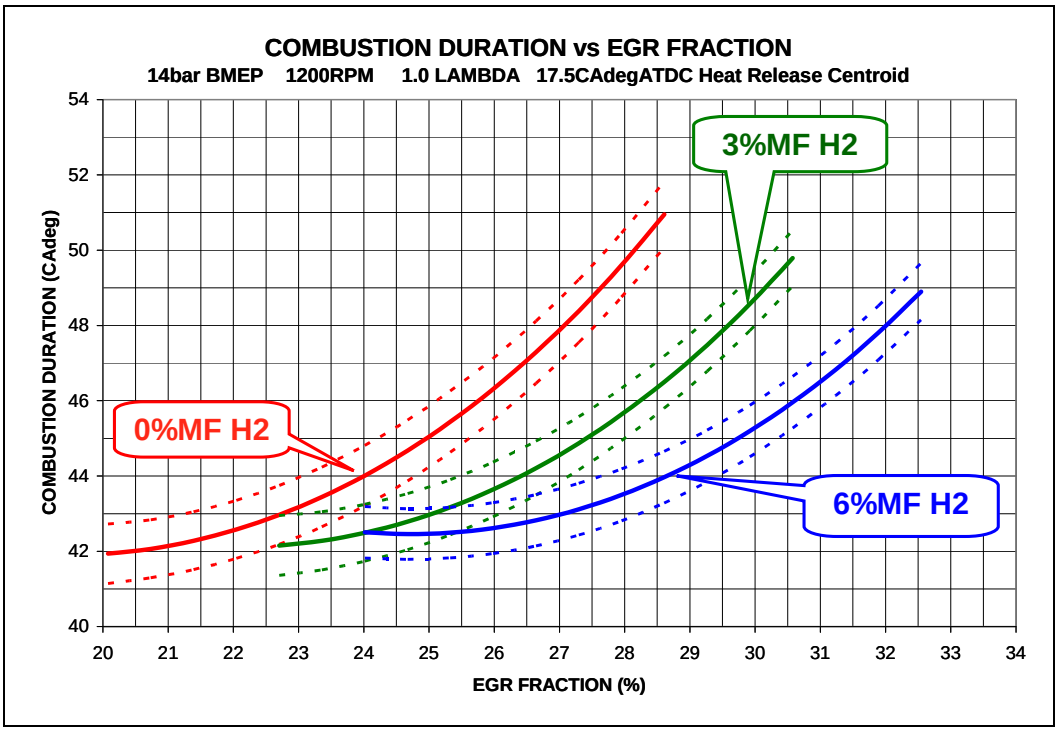

The observed duration is reduced for a constant EGR Fraction as hydrogen fraction is increased. This is beneficial because higher EGR fraction is enabled at the combustion stability limit, resulting in a reduction in NOx. The maximum combustion duration observed was at 0 percent hydrogen fraction. This is approximately 51CAdeg as indicated in Figure 57. There is also a minimum duration dictated by the onset of Knock. This duration is approximately 42CAdeg.

The effect of EGR Fraction on Unburned Hydrocarbons for a given hydrogen fraction can be seen in Figure 58.

Figure 58: Unburned Hydrocarbons Versus EGR Fraction for 14bar BMEP Stoichiometric with EGR Testing

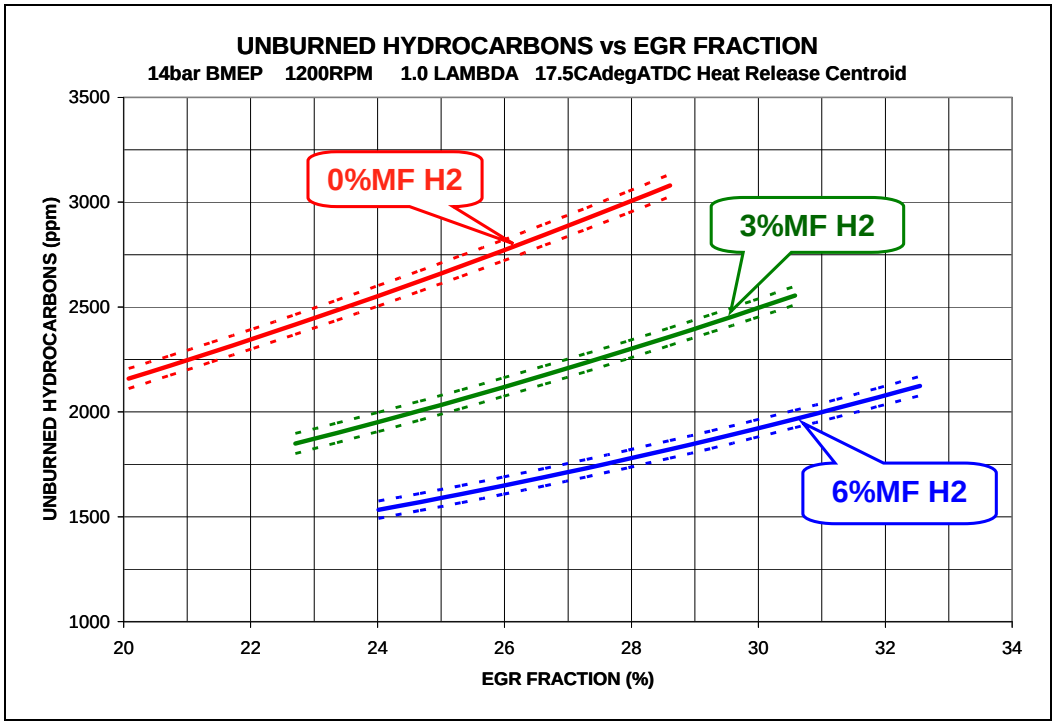

As the hydrogen fraction increases the unburned hydrocarbons decrease at a constant EGR Fraction. Unburned hydrocarbons at 0 percent hydrogen fraction and 20 percent EGR are approximately equal to those at 6 percent hydrogen fraction and 32 percent EGR.

The effect of EGR Fraction on Exhaust Oxygen for a given hydrogen fraction can be seen in Figure 59.

Figure 59: Exhaust Oxygen Versus EGR Fraction for 14bar BMEP Stoichiometric with EGR Testing

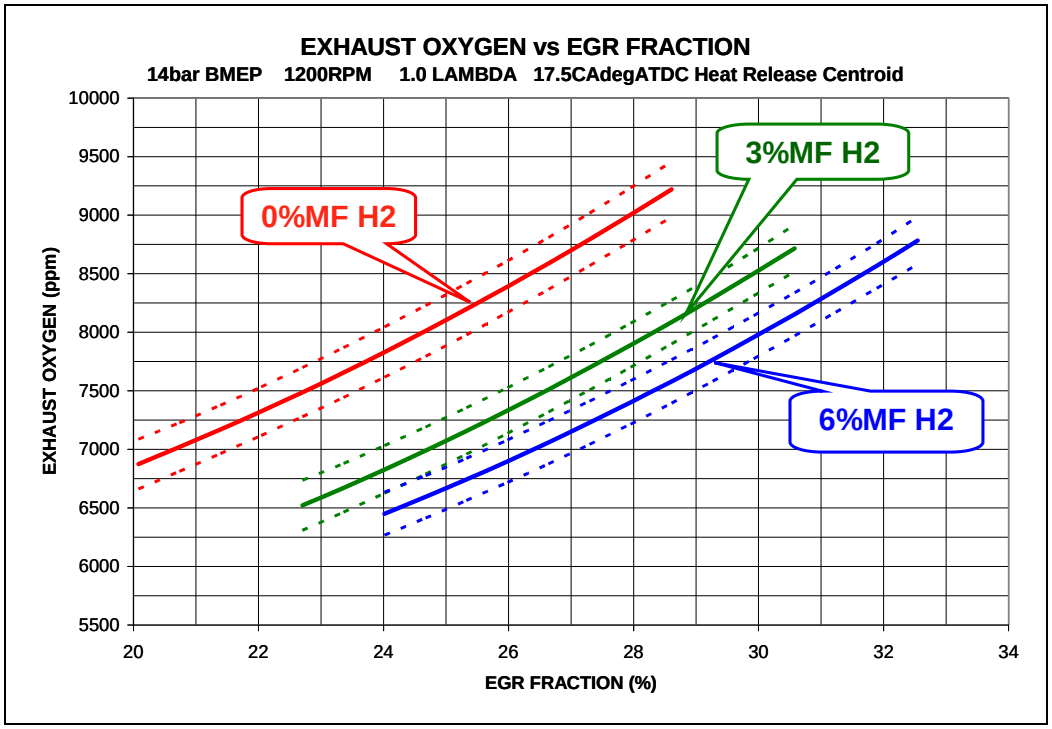

As the hydrogen fraction increases the exhaust oxygen for a constant EGR fraction decreases. Exhaust oxygen with 6 percent hydrogen fraction and 32 percent EGR is somewhat lower than with 0 percent hydrogen fraction and 28 percent EGR. This is significant because the three way catalyst to be used for this program requires that exhaust oxygen not increase relative to that for pure natural gas and 28 percent EGR.

Other significant results of the testing conducted under Task 3.2 and documented in the Interim Report submitted to the Energy Commission for the task include but are not limited to the following:

- The addition of hydrogen significantly extends the EGR limit of combustion stability under stoichiometric conditions; EGR limit is extended from 28 percent to 32 percent with 6 mass percent hydrogen blended with the natural gas; raw exhaust NOx is reduced from 300 ppm to 160 ppm, respectively.
- Stoichiometric operation with 6 mass percent hydrogen and 32 percent EGR results in approximately the same exhaust gas oxygen concentration as does operation on pure natural gas with 28 percent EGR. This strongly suggests that the three way catalyst (TWC) presently being developed will successfully accommodate the exhaust composition resulting from usage of hydrogen enriched fuels.

- The addition of hydrogen significantly reduces raw exhaust hydrocarbons under stoichiometric with EGR conditions at the limits of combustion stability. The reduction under stoichiometric with EGR conditions is nearly 28 percent.
- Combustion duration with 6 mass percent hydrogen and 32 percent EGR is slightly shorter than that with pure natural gas and 28 percent EGR. However, BTE suffers slightly using the hydrogen blend relative to pure natural gas, probably due to increased pumping work in supplying the greater charge flow (32 percent versus 28 percent EGR).
- Knock Margin with 6 mass percent hydrogen and 32 percent EGR is approximately equal to that with pure natural gas and 28 percent EGR.
- The results obtained in Task 3.2 indicate that engine operation using reformate fuel, to be supplied by the thermo chemical recuperator (TCR), are expected to be similar to that obtained with 6 mass percent hydrogen blended in natural gas and 32 percent EGR.
- Acceptable engine operation using reformate fuel under stoichiometric conditions is expected to be obtained based on the test results with 6 mass percent hydrogen and 32 percent EGR.
- These results suggest that the proposed system configuration using stoichiometric with EGR, TWC and TCR will successfully achieve the goals of this program which are:
    - Exceed 40% System Effective BTE
    - 0.023 gm NOx/bhp-hr
    - 0.030 gm CO/bhp-hr
    - 18Bar BMEP at 1200RPM (455bhp/330kWe

4.2.3 Prediction of In-Cylinder Combustion of Hydrogen-Enriched Natural Gas Using Computational Fluid Dynamics (CFD) Tools (Task 3.3)

Fixed HRR Calibration Results

The basic QSK 19 GT-Power model was then calibrated with a fixed HRR curve for pipeline quality natural gas from engine data. The results of this calibration are shown in Figure 60 and Figure 61. Figure 60 represents the peak cylinder pressures comparison between the experimental data and GT-Power results. Figure 61 shows the comparison between apparent HRR from experimental data and GT-Power results. Form the plots it is evident that GT-Power results show close agreement with the experimental data.

Figure 60: Fixed HRR Calibration – Cylinder Pressure Comparison

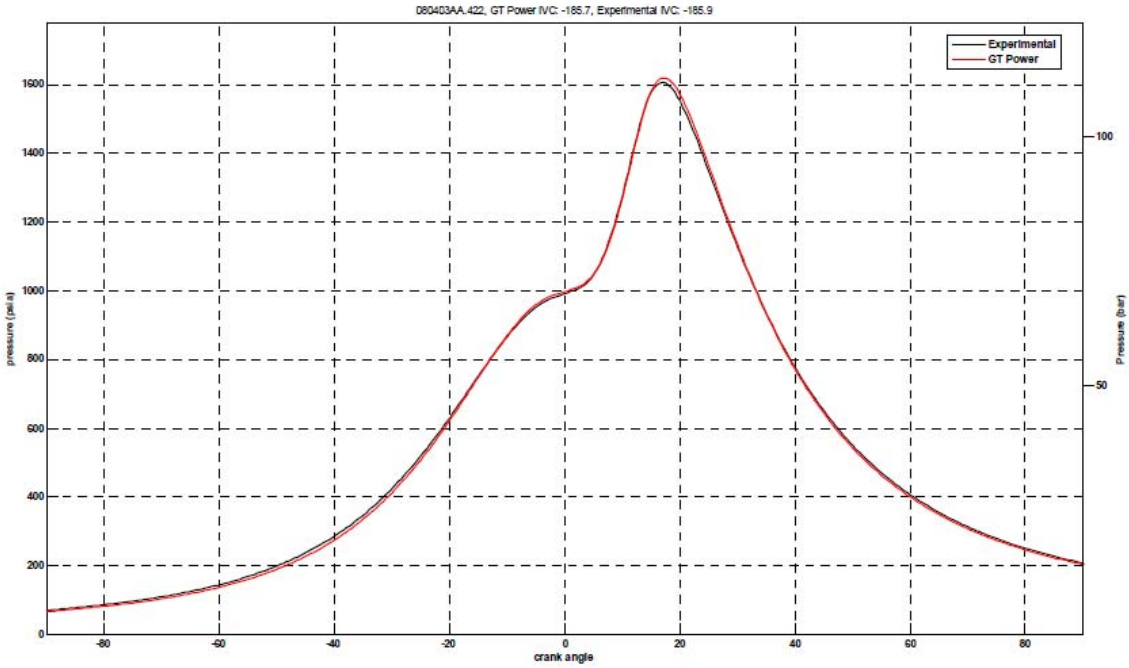

Figure 61: Fixed HRR Calibration – HRR Comparison

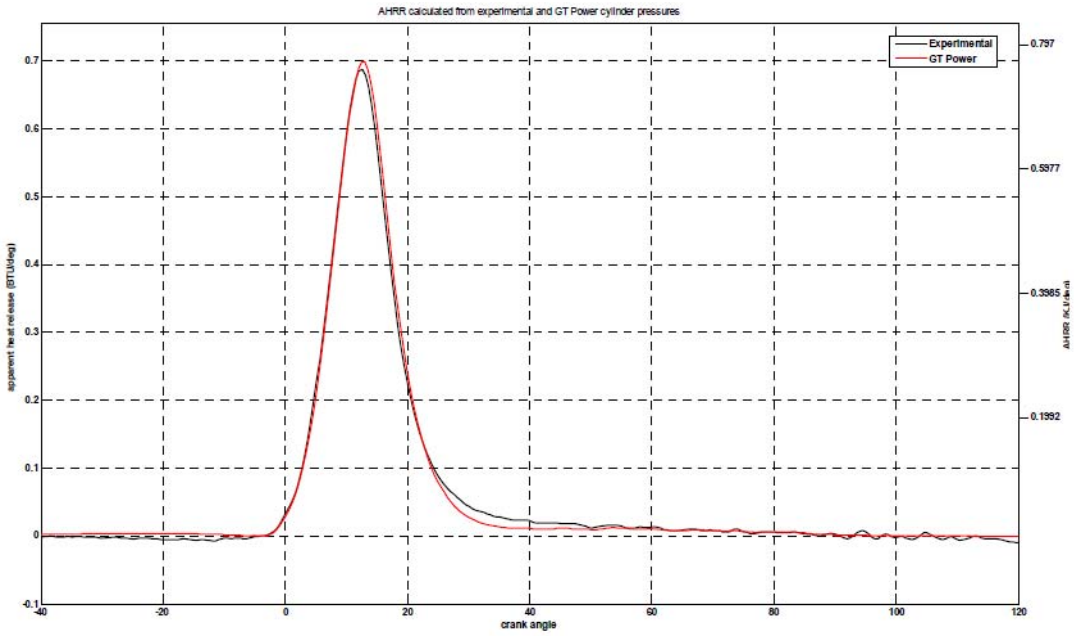

Predictive HRR Calibration Results

The results from the above calibrated fixed HRR model were used to develop and calibrate the predictive model. The predictive model uses the newly developed user model for LFS calculations inside GT-Power. The predictive model is also calibrated using engine data for pipeline quality natural gas. The calibration for predictive model is done changing the 'Kappa' value which is used in the LFS model and three different constants used in the standard GT Power Version 6.2 turbulent flame speed model which are given below. The value of Kappa is derived empirically.

- Flame Kernel Growth Multiplier (FKGM) – this variable influences the ignition delay
- Turbulent Flame Speed Multiplier (TFSM) – this variable influences the overall duration of combustion.
- Taylor Length Scale Multiplier (TLSM) – this variable influences the 50% burn point

The calibration results for the predictive model are given in Figure 62 through Figure 65. Figure 62 and Figure 63 give the calibration results for a lean burn case. Figure 64 gives the comparison between the engine data and GT-Power data for cylinder pressure while Figure 65 gives the comparison for apparent HRR. The various values for above mentioned parameters for calibration are given below:

Figure 62: Predictive Model Calibration (Lean Burn) – Cylinder Pressure Comparison

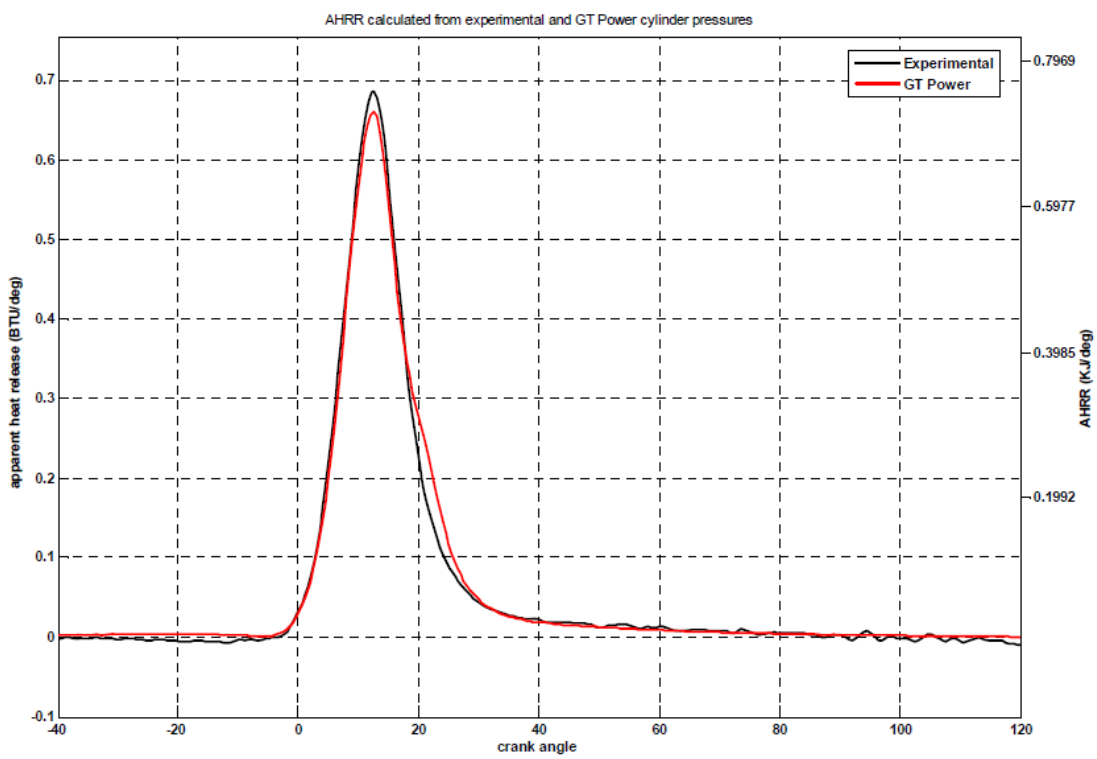

Figure 63: Predictive Model Calibration (Lean Burn) – HRR Comparison

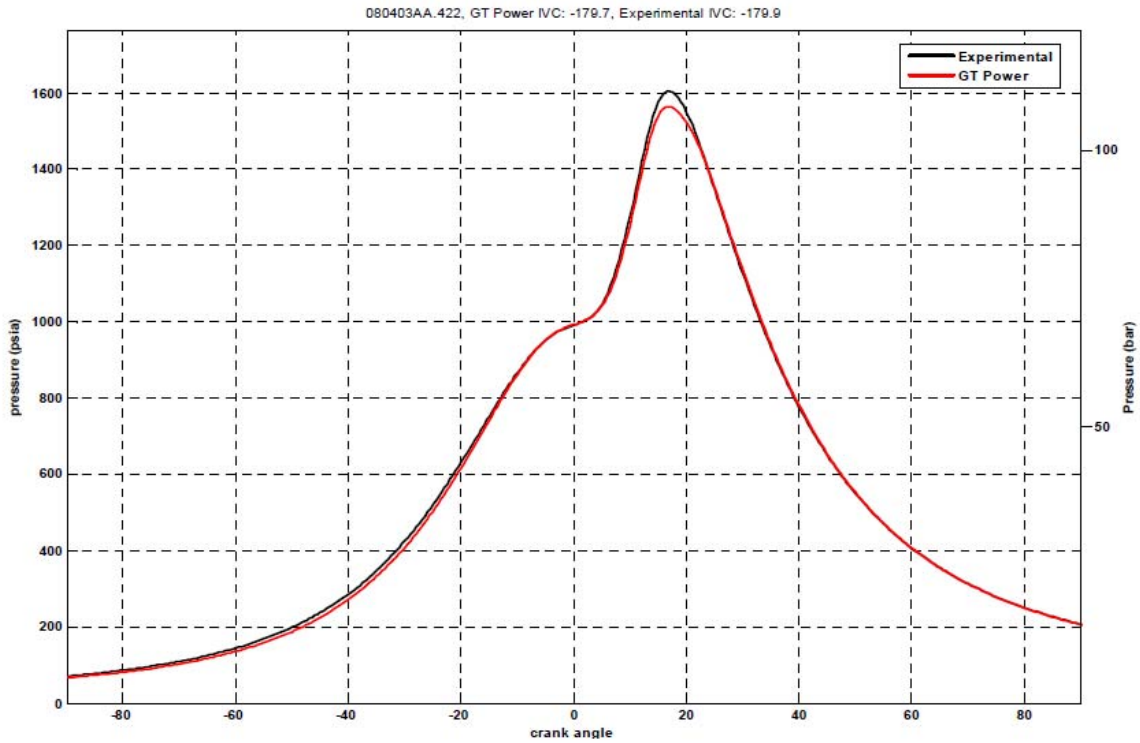

- Kappa = 6.0 * 10^{12}
- FKGM = 1.0
- TFSM = 1.6
- TLSM = 1.08

Figure 64 and Figure 65 gives the calibration results for stoichiometric with Exhaust Gas Recirculation (EGR) case. Figure 644 gives the comparison between the engine data and GT-Power data for cylinder pressure, and Figure 65 gives the comparison for apparent HRR. This calibration was done by keeping the same parameters for the turbulent flame speed model used for lean burn case, but to match the data we need to change the Kappa value. The new Kappa value used is:

- Kappa = 2.0 * 10^{12}

The results for predictive GT-Power model agree very well with the experimental data. The result of this work has illustrated the necessity of changing the Kappa value when the operating condition is changed from lean burn to stoichiometric with EGR. This fact makes it important that we need to study the change in Kappa for different operating conditions. And that will be the next step in this development.

Figure 64: Predictive Model Calibration (Stoichiometric with EGR) – Cylinder Pressure Comparison

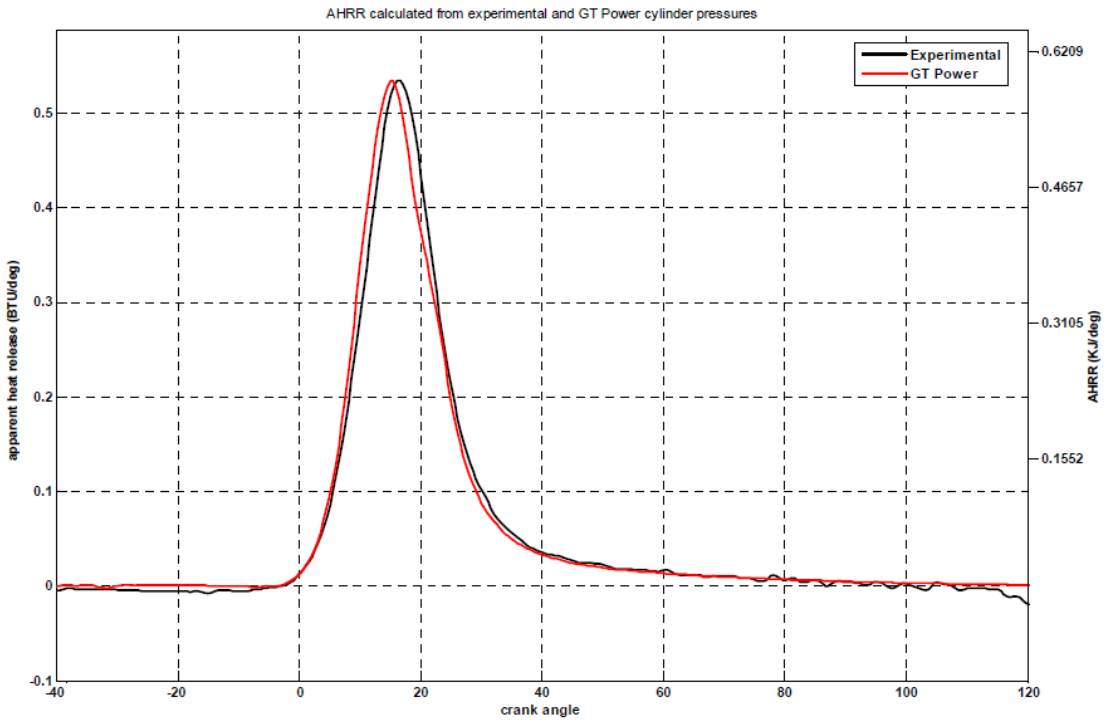

Figure 65: Predictive Model Calibration (Stoichiometric with EGR) – HRR Comparison

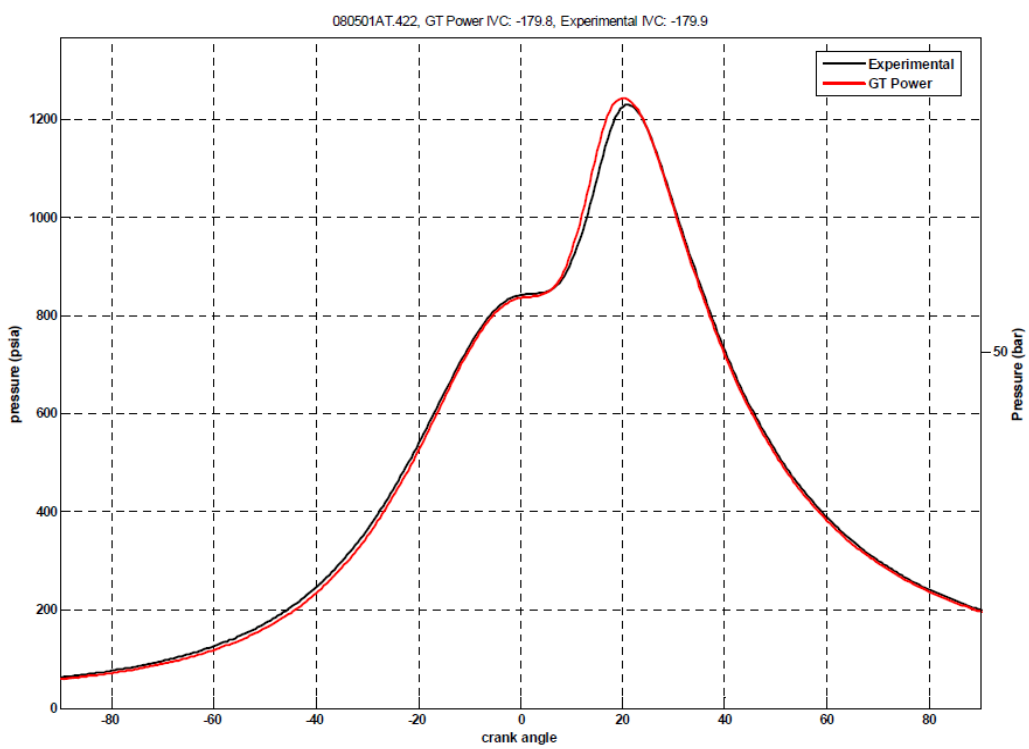

4.2.4 Design Optimal Combustion Recipe for the QSK19G Engine Using Hydrogen-Enriched Natural Gas (Task 3.4)

The objectives for Task 3.4 were successfully completed. The major outcome of this task is a combustion recipe for the QSK19LG engine that will optimize overall system BTE using the advanced three way catalyst and thermo chemical recuperation system.
The optimal combustion recipe specifications that were determined to fulfill the objectives of this Task include the following:

- An optimized Nebula piston bowl.
- The highest level of inlet port swirl that has been obtained with the existing cylinder head casting.
- A proprietary pre-chamber spark plug manufactured by MultiTorch.
- A camshaft providing an inlet valve closing angle near bottom dead center on the inlet stroke.
- A turbocharger exhibiting an optimal compressor and turbine match.
- An after cooler that is currently in production on the Cummins QSK19G engine.
- An existing EGR cooler has been fabricated for testing purposes that will adequately cool the reformate for the test cell performance and endurance demonstrations.

The results of the optimization process are provided in Figures 66 and 67 below.

Figure 66: Optimum System BTE Versus In-Cylinder End Gas Temperature Limit

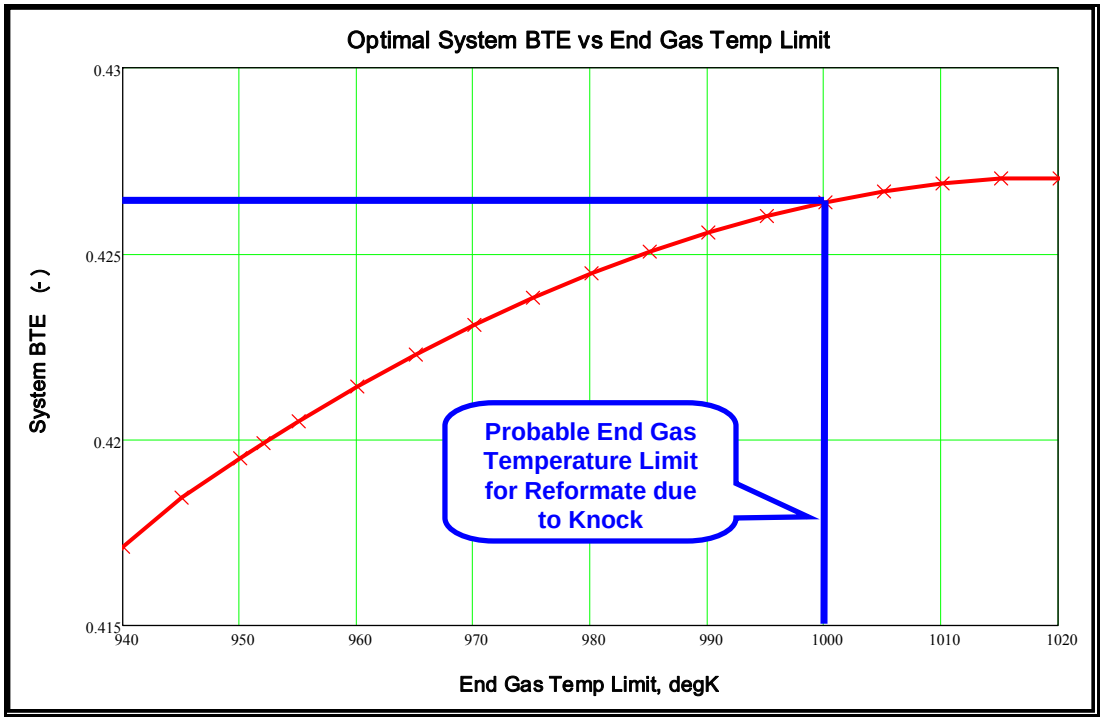

Figure 67: Settings of IVC, Cr, and Centroid to Obtain Optimal System BTE Versus In-Cylinder Peak End Gas Temperature

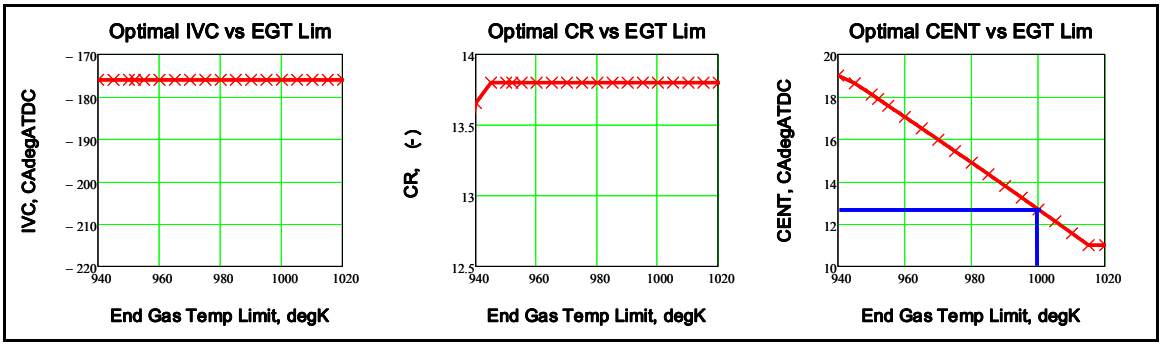

The results indicate that the Optimal IVC is -176 CAdegATDC and optimal compression ratio is 13.8. Spark timing would be adjusted to achieve the centroid of heat release needed to meet the maximum end gas temperature constraint, which, according to Figure 67, would be about 12.8 CAdegATDC to meet a 1000 degK limit.

With IVC at -176 CAdegATDC, compression ratio at 13.8, and centroid of heat release at 12.8 CAdegATDC, the projected system BTE is 42.6 percent which achieves program goals.

4.2.5 Procure, Assemble, and Test the Hydrogen-Enriched Natural Gas QSK19G Combustion Recipe and After Treatment System (Task 3.5)

Natural gas testing without hydrogen was initially conducted. Dithering parameters were explored to determine if emissions goals could be achieved for both NOx and CO.

Testing indicated that the best simultaneous reduction of NOx and CO was established at a mean Lambda of 1.002. The optimized results of that testing are shown in Figure 68. As stated above, ATWC out NOx must be at or below 7 PPM, and for CO 14 PPM, to achieve targets.

Figure 68: Simultaneous Compliance Performance

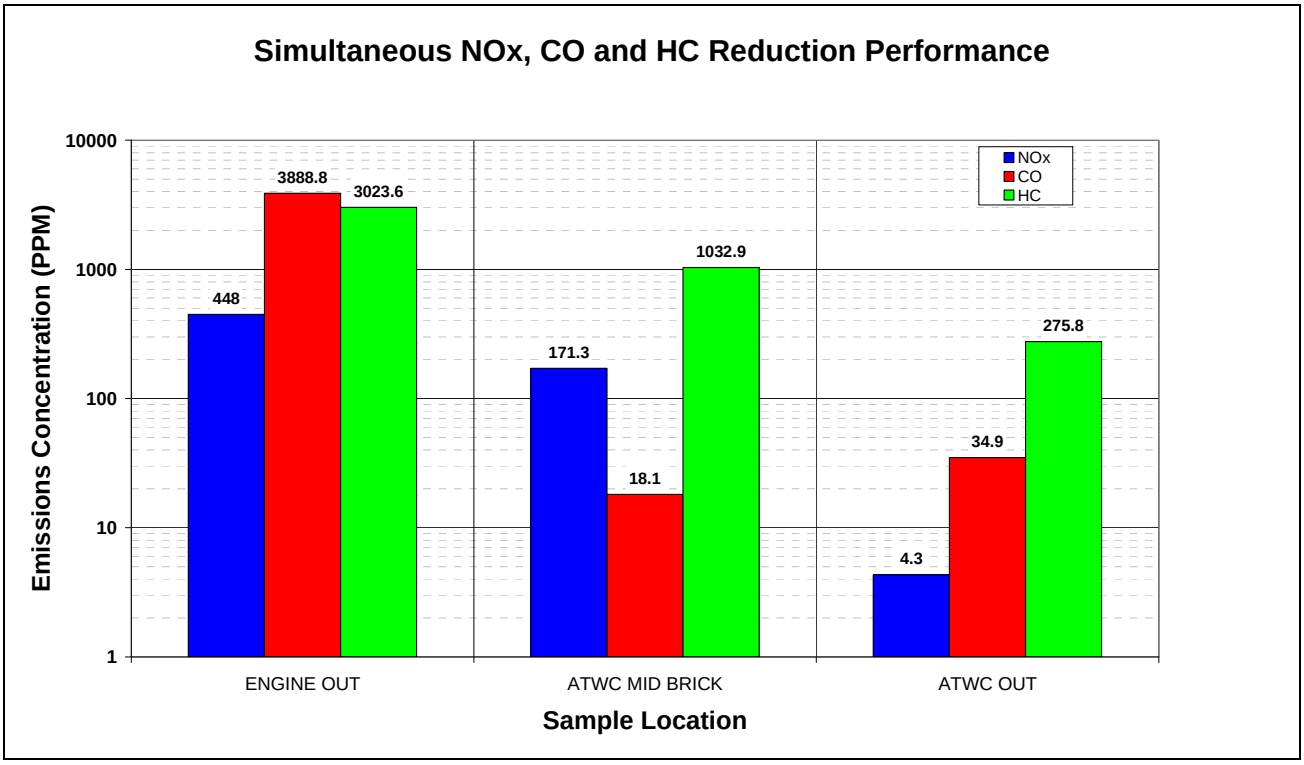

Key findings from dithering parameter testing were:

- Dual compliance of NOx and CO could not be consistently achieved. Settings which exhibited continuous NOx reduction at or below target levels resulted in periodic CO excursions significantly above the CO target of 14ppm.
- UHC levels at the exit of the ATWC were typically above those of CO despite being somewhat lower at the ATWC entrance.
- CO was lower after the first catalyst brick than after the second indicating CO was being generated across the second brick of the ATWC.
- The time averaged conversion efficiency for both NOx and CO was greater than 99 percent; however, CO conversion efficiency was still too low to achieve target.

When the ATWC out NOx concentration is at target level, CO conversion efficiency must be above 99.5 percent to achieve target.

Testing indicated that an increase in CO was occurring between the mid brick location and the ATWC out location rather than a reduction. To aid in understanding this phenomenon, ATWC outlet concentrations were continuously measured and recorded over an extended period. A key finding of that testing was that time resolved dual compliance was periodically obtained for CO and NOx and then lost as indicated in Figure 69**Error! Reference source not found.**. Extended measurements indicated this cycle continued to repeat.

Figure 69: Dual Compliance for NOx and CO

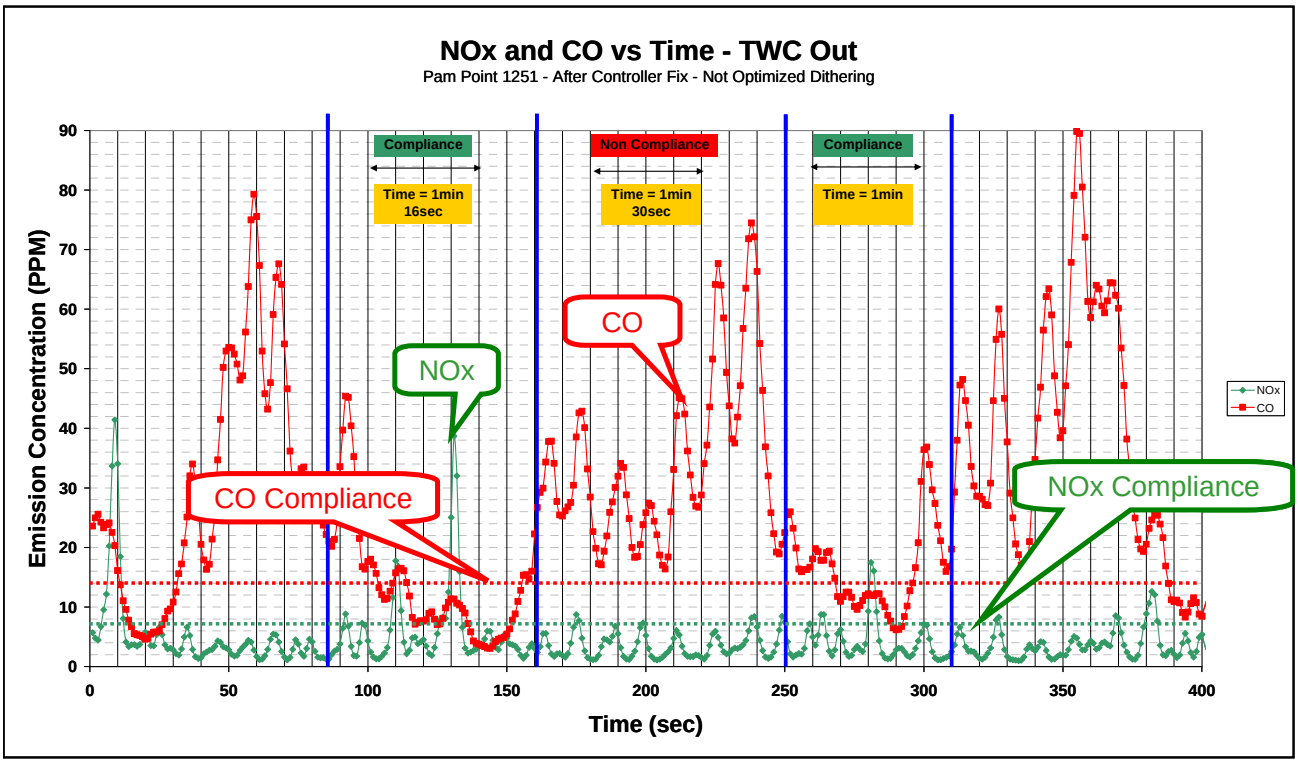

The fact that dual compliance could be obtained for a short period of time is significant because it indicates the system is capable of meeting CARB emissions but the conditions at the catalyst are not always correct for maintaining compliance.

To better understand why compliance was being lost a study was conducted to investigate dithering pulses as they propagated through the system. The dithering investigation utilized three automotive type oxygen sensors placed at the following locations:

- Engine outlet
- Between the first and second catalyst bricks
- ATWC outlet

The goal for the testing was to quickly understand the trend of what was happening with the dither pulse at different locations within the system. Figure 70 provides the results from those measurements.

Figure 70: EGO Sensor Results

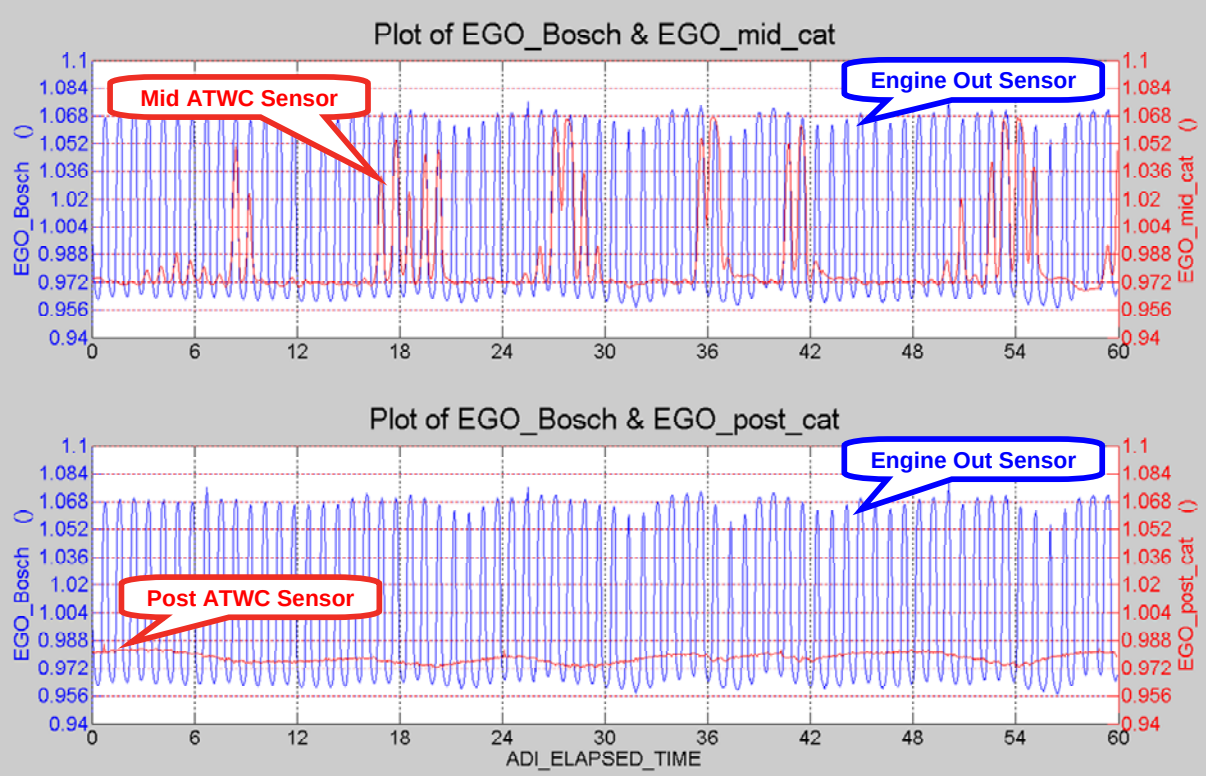

Four key findings were determined from the results shown in Figure 71.

1. The engine out sensor (ATWC inlet) indicates that rich to lean dithering is occurring as intended.
2. The mid-brick ATWC sensor did not indicate the same dithering cycle as the engine out sensor. This indicates the oxygen storage capability (OSC) of the ATWC is not being effectively utilized.
3. The ATWC out sensor is not indicating rich to lean dithering. If it were, the rich to lean dithering amplitude would need to be reduced.
4. The oxygen sensor at the ATWC exit is indicating a rich overall Lambda suggesting UHC is not being completely utilized within the ATWC. This is in agreement with the measurements shown earlier.

The desired Lambda characteristics as suggested by the ATWC supplier (Johnson Matthey) at the various locations are shown in Figure 71.

Figure 71: Ideal Dithering Results

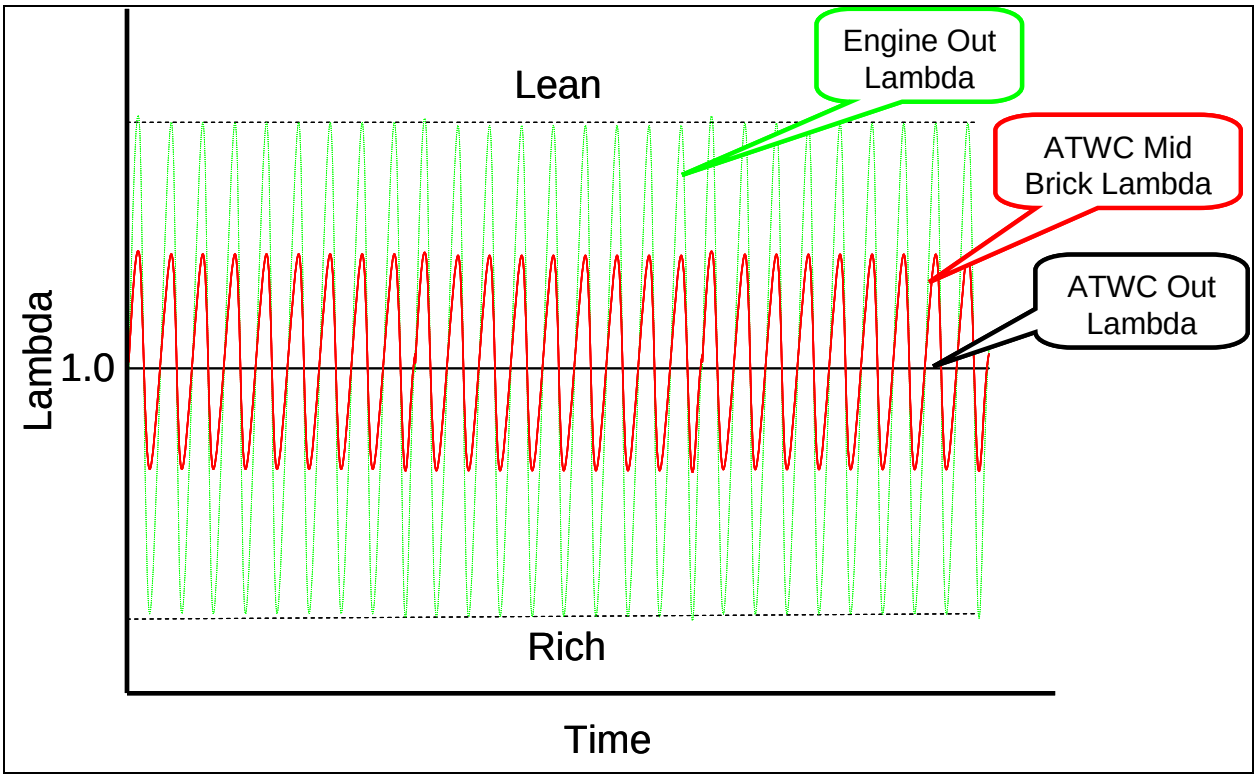

Comparing Figure 70 and Figure 71 indicates that the dithering of the ATWC is not resulting in the desired characteristics at the mid-brick location as well as at the catalyst outlet.

Consultation with Johnson Matthey indicated that the dither frequency employed for the results shown above is not optimal to match the OSC characteristics of the ATWC. Their suggestion is that the ATWC could not retain enough oxygen to last through the rich part of the dither cycle with low dithering frequency. Johnson Matthey indicated this is consistent with the observed ATWC outlet UHC and CO. Johnson Matthey further indicated that dither frequency on the order of 3Hz is required for this application. Testing, however, indicated that dithering more frequently than 1.2Hz did not result in improved CO and UHC conversion efficiencies.

The lack of system response to dithering frequencies above 1.2 Hz suggested that the location of dithering fuel admission used for this testing is not optimal. Figure 72 and Figure 73 indicate the location of dithering fuel admission employed for the Task 3.5 testing which is upstream of the turbocharger compressor. It became evident as a result of discussions that the large volume between the dithering fuel admission point and the engine itself could result in excessive mixing and “dampening” of the dithering fuel pulses at frequencies above about 1 Hz.

A new location for dithering fuel admission much closer to the engine inlet valves will be explored under Task 4.1 to determine if the reduced trapped intake volume will increase the effectiveness of dithering at frequencies nearer the Johnson Matthey recommendation of approximately 3 Hz.

In the event that the new dithering fuel admission location does not improve ATWC performance sufficiently to achieve required CO targets, an auxiliary oxidation catalyst, to be specified and procured from Johnson Matthey, will be installed in the exhaust system downstream of the TCR.

4.3 Extended ATWC Operation and Compliance Assessment

Steady state testing was conducted to determine if required ATWC NOx conversion efficiency can be maintained over an extended period of time. Figure 72 provides these results over approximately 22 hours of operation at 330 kW and an average Lambda of 0.994 +/- 0.001.

Figure 72: NOx Reduction Performance Results

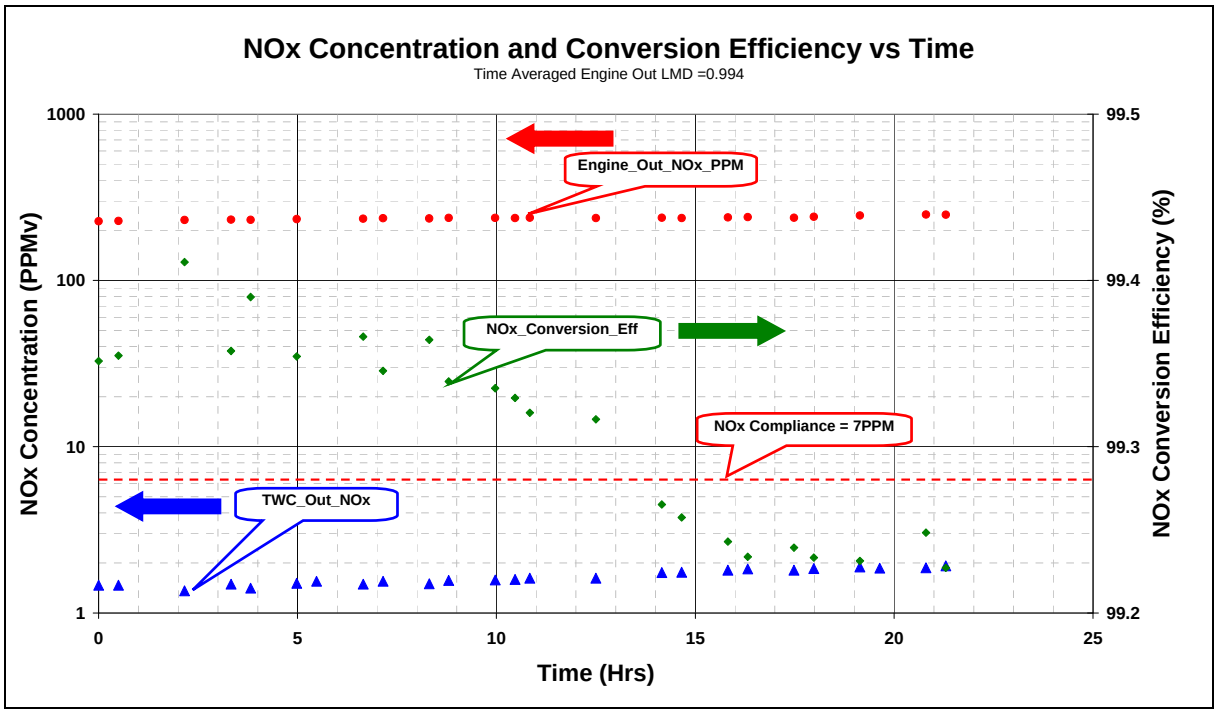

These results suggest that the ATWC can provide required NOx conversion efficiency at an average Lambda that enables meeting the engine BTE target. This is a significant improvement over previous generation three way catalyst technology for this application.

Figure 73 provides CO measurements taken at the same time as the data provided in Figure 7. Although CO conversion efficiency is below requirement to achieve emissions target, it is nevertheless consistent.

Figure 73: CO Reduction Performance

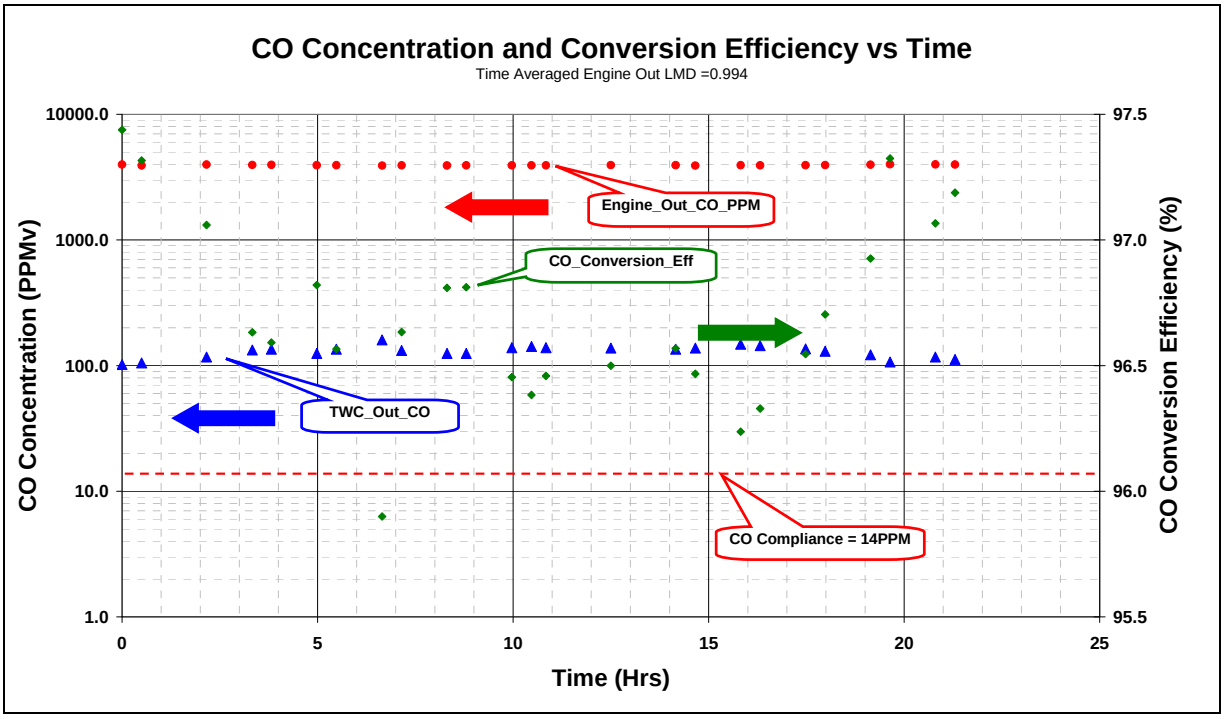

Natural Gas and Hydrogen Blends ATWC Performance

Testing was conducted with natural gas / hydrogen blends to understand the effect of hydrogen on the ATWC performance. Steady state data was acquired as the amount of hydrogen blended with the natural gas was changed. EGR was also changed to match requirements imposed by the addition of hydrogen. As the H_2 fraction was increased the Lambda bias was adjusted to always maintain NOx compliance. Results of the testing are shown in Figure 74.

Figure 74: NOx and CO ATWC Performance - H2 and Natural Gas Mixtures

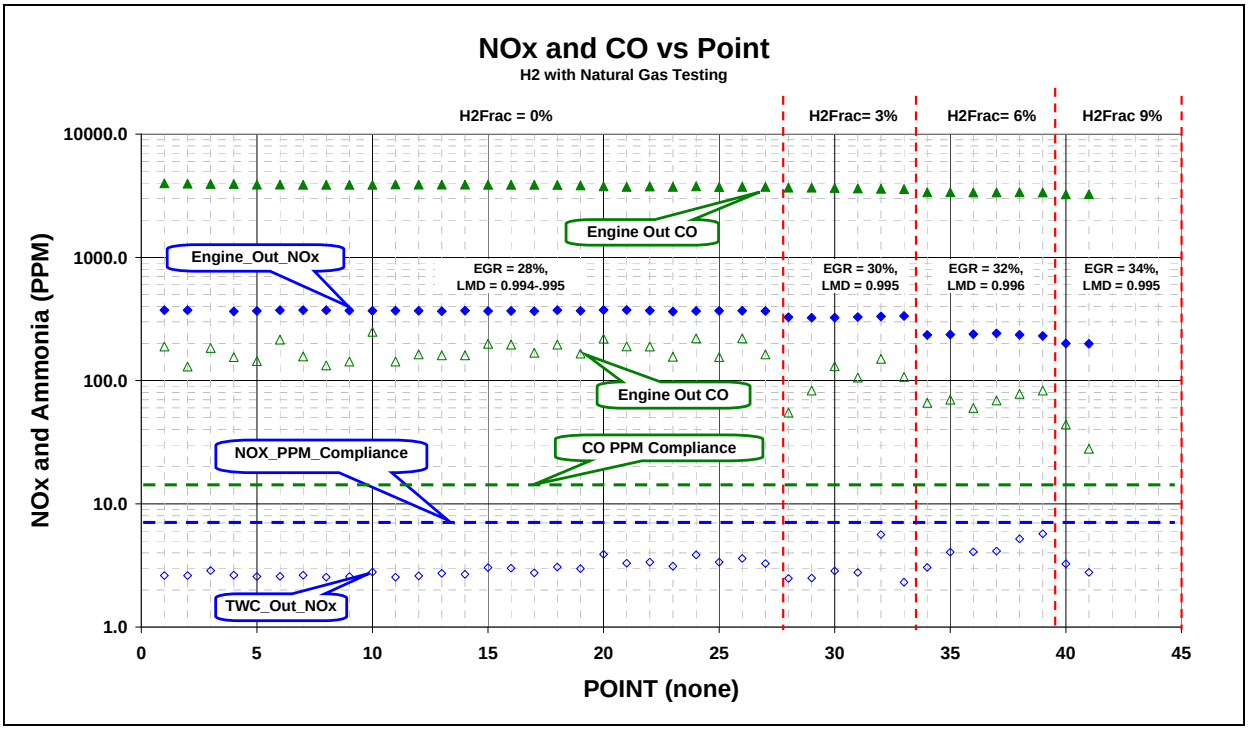

Key findings from the hydrogen / natural gas fuel blend testing were:

- NOx emissions at the ATWC outlet could be maintained below target requirements operating with hydrogen enriched fuel mixtures.
- Engine out NOx was reduced with hydrogen enriched fuel mixtures, most likely due to the increased amount of EGR the hydrogen enriched fuels enabled.
- Engine out and ATWC out CO was reduced when running on hydrogen enriched fuel mixtures.

Due to the CO reductions at the exit of the ATWC when running on hydrogen enriched fuel mixtures, a decision was made to postpone testing of the new dithering fuel admission location, as described under Section 3.2 above, until the TCR is installed in the system which is to be conducted under Task 4.1. This decision was made because the optimization of the emissions and ATWC performance should be done with the actual Reformate fuel to be supplied by the TCR.

4.4 Demonstrate Integrated TCR, QSK19G Engine and After-Treatment System (Task 4)

4.4.1 Integrate and Test TCR System with QSK19G Engine and After Treatment Designed for Hydrogen-Enriched Natural Gas (Task 4.1)

Per the discussion above, all necessary equipment was installed into the Cummins test cell. The testing of the 331 kWe TCRS integrated with the engine was conducted at the Cummins Test Cell under the control of the Cummins engineers and technicians.

Commissioning efforts were focused on exploring the operating space of the system. A sequence of tests was conducted to determine the control characteristics required with the reconfigured system while passing only exhaust gas through the TCR.

At a design load on the engine of 18.6bar BMEP and 1200rpm, an uncontrolled knock situation occurred which resulted in a severe piston scuff. It was discovered that a key safety system in the prototype control system which monitors for Knock was inadvertently deactivated while working on other sub systems of the controller. Figure 75 below shows the scuffed piston.

Figure 75: Scuffed Piston Resulting from Uncontrolled Knock Event

Fortunately, severe damage was confined to only one cylinder, and no other engine damage occurred. The engine was disassembled, all cylinder heads were rebuilt, and a new set of pistons with a slightly lower compression ratio were machined, all to improve Knock margin. The engine was re-assembled and operated successfully throughout the remainder of the test program.

After the control system was developed to successfully accommodate the characteristics of the system integrated with the TCR, fuel was gradually introduced into the stream of exhaust gas entering the TCR. It was noted from normal test cell data quality checks that not all fuel entering the system was participating in engine combustion. Remedial investigation indicated that the flanges of the TCR had warped and were leaking. A root cause analysis of the problem indicated that the original flange bolts lacked sufficient strength at operating temperature

resulting in a loss of clamp load. In conjunction with GTI and its supplier of the full scale TCR, a new bolt/washer system was designed, tested, and installed. The new fastening system, shown in Figure 76, resulted in acceptable clamp load throughout the operating range of the system and successfully addressed the leaking issue.

Figure 76: Leaking Flange, Yielded Original Bolt, and New Fastening System with High Grade Bolts and Washers

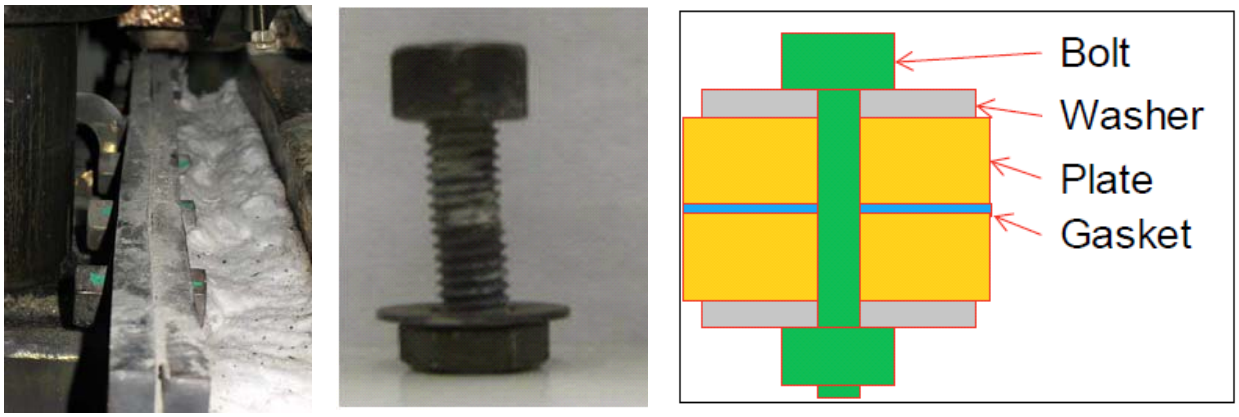

The modifications to the engine and TCR systems described above resulted in sufficient robustness to begin exploration of the TCR operating characteristics.

The mass of the TCR system, on the order of 1 ton, results in long warm up intervals. Because the performance of the TCR is a function of the composition, mass flow rate, and temperature of the gases passing through the unit, the long warm up intervals and large thermal inertia results in very long stabilization time to obtain representative data.

It became quickly evident that the Reformate composition varied in time despite constant settings of fuel, air, EGR fraction, and exhaust gas temperature, all at constant engine power. After warming up the system with only EGR passing through the TCR, the concentration of Carbon Monoxide (CO) in the Reformate would initially reach a high level but then would decrease as time progressed. Figure 77 illustrates representative results over several hours.

Figure 77: Concentration of CO in Reformate Versus Time at 15% and 72% Fuel to the Reformer

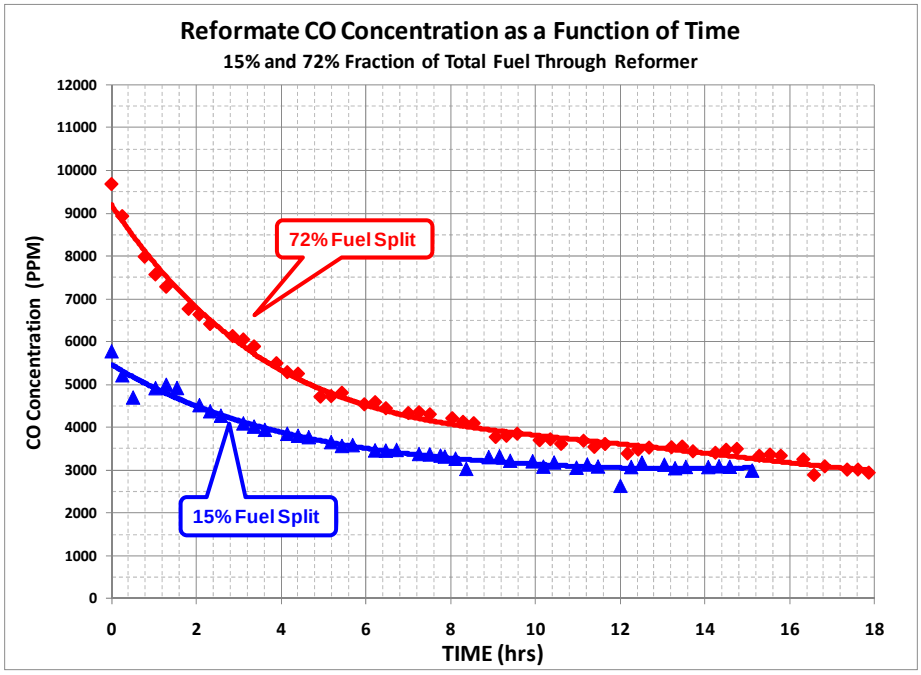

Near the end of the testing campaign, by which time a number of attempts to regenerate the catalyst performance had been attempted, a portable gas chromatograph was installed in the test cell in to determine the concentration of H2 in the reformate. GTI obtained the chromatograph and oversaw its integration into the Cummins test cell system. The results using the chromatograph, indicating that the level of Hydrogen (H2) in the reformate is proportional to the level of CO, are provided in Figure 78.

Figure 78: Measurements of H2 and CO Concentration in the Reformate as a Function of Time with the Portable Gas Chromatograph

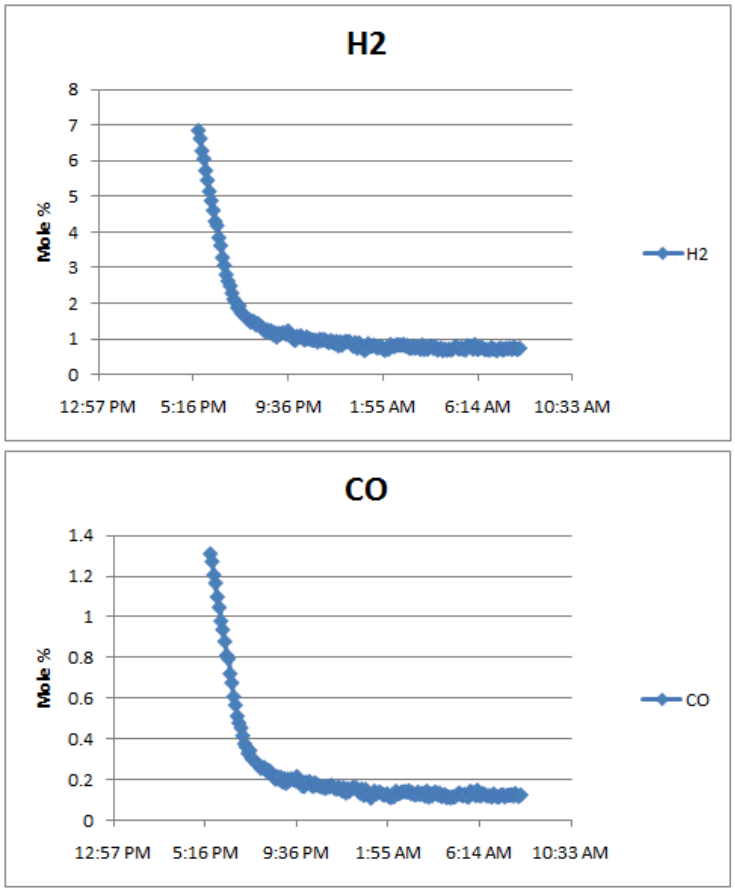

By the time the portable GC was installed, the TCR system was not capable of meeting predicted performance for even a short period of time. Figure 79 provides predicted and maximum observed (short term) performance of the TCR system by this time.

Figure 79: Predicted and Maximum Observed (Short Term) TCR Performance as Indicated by H2 and CO Reformate Concentration

	Predicted Concentration (PPM)	Achieved Concentration (PPM)
CO	21500	14000
H2	129000	70000

Figure 80 is data that was plotted from some of the earlier TCRS testing showing peak, short-term H2 yields that were estimated based upon FTIR measurements at the outlet of the reformer. It is apparent that the performance of the TCRS had degraded substantially by the time data reported in Figure 28 was measured.

Figure 80: Hydrogen Content in Reformed Fuel from TCRS Tests

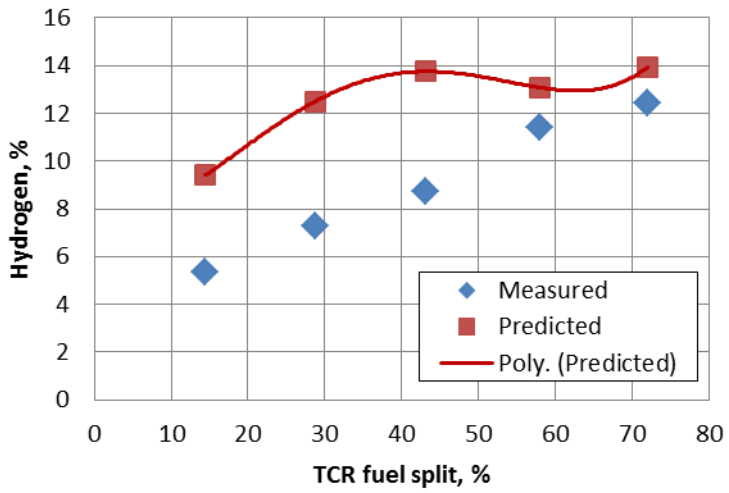

The varying reformate concentration made testing of the system difficult, as the engine requires high EGR to avoid knock if the concentration of H2 is high, yet will suffer misfire at that EGR level if the concentration of H2 is low.

The impact of the reduction in CO concentration (and, by inference, H2 concentration) on system BTE is provided in Figure 81 below.

Figure 81: Reduction in System BTE and Reformate CO Concentration Versus Time

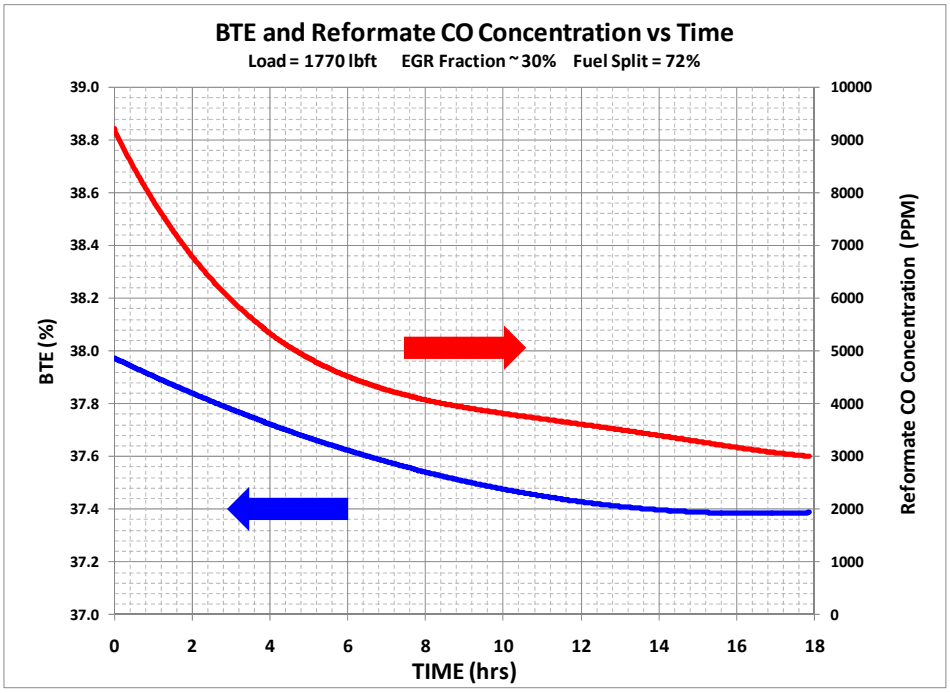

Base engine BTE for the data shown in Figure 29 was below nominal design point BTE of 39 percent (demonstrated under Task 3.5) because the EGR fraction, spark timing, and load were adjusted to accommodate the varying composition of the Reformate. These adjustments resulted in the base engine BTE being approximately 37 percent.

Due to the thermal inertia of the system described above, a typical 8 hour day shift resulted in only a very few data points. It was not possible to automate testing with fuel passing through the TCR during off shifts due to the unpredictable level of H2 in the Reformate, and thus it was necessary to conduct all TCR performance testing during the day shift when test cell operator resources were available. This resulted in unexpectedly low productivity.

The mechanical failures described above, the increased amount of test time required, and the performance of the TCR being different from predicted levels, resulted in the end date of the program being reached before all of the issues could be resolved.

A "root cause analysis" of the TCR performance issues has not yet been completed.

4.4.2 Demonstration Test of Combined TCR/Engine/After Treatment System (Task 4.2)

Due to problems encountered during the execution of Task 4.1, it was not possible for Cummins to complete this 500 hour endurance test.

CHAPTER 5:
Conclusions and Recommendations

5.1 Conclusions

It is estimated that the 331 kWe TCRS integrated with the 19 liter at the Cummins test cell was operated over 1000 hours with at least engine exhaust gas entering the catalytic section of the recuperative reformer. Unfortunately, performance problems with the thermal chemical recuperation system adversely affected the capability of the engine be operated at highest efficiency. This precluded achievement of the program goal of performing a 500 hour endurance test.

The full-scale 331 kWe TCRS integrated with the Cummins engine proved to be unwieldy and too difficult to operate in steady state condition over extended periods. Attempts to optimize the engine performance with reformate fuel produced in the TCRS in a closed-loop manner exposed several complex control issues. Nevertheless, the following accomplishments were achieved and valuable new information was obtained:

- Validated the TCR concept in the integrated 331 kW engine system.
- The observed unstable performance of the TCR is attributed to the loss of reforming activity of the catalyst suspected due to carbon deposition and contaminant poisoning.
- Gained an understanding of TCR operational characteristics in the integrated engine system for better designing of future TCR systems.
- Operation of the TCR with a feed gas composition corresponding to the 72 percent fuel split condition might have resulted in carbon deposition leading to the observed decrease in CO levels with time.
- TCR catalyst appears to regenerate when engine exhaust gas only is passed over the reforming catalyst for a sufficiently long period of time.
- An attempt to regenerate the TCR catalyst with 0.5-2 percent oxygen, 17-19 percent steam and balance nitrogen at 1050° F(maximum deliverable by the engine) was unsuccesful as the temperature was not high enough to clean the catalyst surface by oxidation.

5.2 Commercialization Potential

GTI's business model is to license its patents and know-how to others for commercialization. For the 331 kWe TCR system fabricated and tested at Cummins, GTI partnered with Catacel Corporation of Garrettsville, Ohio and Thermal Transfer Corporation in Duquesne, Pennsylvania. While both companies have expressed potential interest in a license to offer thermo chemical recuperation systems for stationary engine applications, neither has stepped forward with a proposed business plan.

Availability and selection of a suited catalyst is one of several critical steps of arriving at a commercially viable concept. The other, equally critical contribution is the design of a

recuperative heat exchanger and reformer with sufficiently large heat transfer surfaces and chemically active catalyst areas, which are suitable for high temperature service.

After meeting these two pivotal, technical hurdles another vital condition must be met; the fabrication and installation cost of the TCR system connected to an installed engine must return its purchasing cost in a relatively short time.

When designing a commercial TCR reformer, it will be necessary to optimize reformer system costs. Considerations that will be important include:

- Heat transfer surfaces must be kept as light as possible.
- The design must facilitate easy fabrication.
- The design must make provision for dealing with thermal expansion and thermal fatigue failures.
- Allowable pressure drops must be used fully.
- Catalyst costs must be kept as low as possible.
- The TCR reformer design must be optimized for maximum hydrogen and carbon monoxide production.

5.3 Recommendations

Continue research and development of Thermo Chemical Recuperation as means for increasing the efficiency of reciprocating internal combustion engines. In view of the fact that the project ended before a thorough "root cause" could be established for the performance issues with the TCR system, the following next steps are recommended:

- Conduct a post-test, disassembly of the TCR to observe any carbon deposition or spalling of the catalyst.
- Perform post-test analyses on catalyst to assess morphological changes (SEM/elemental mapping) and any decrease in catalytic activity.

If it is confirmed that performance issues were linked to carbon deposition or spalling of the catalyst or some poisoning of the catalyst, the following strategies should be considered:

- Evaluate alternative heat management methods and Engine/TCR configurations to increase the temperature and water content of the feed fuel stream to the TCR for better performance.
- Evaluate conditions with the fuel split when there is no carbon deposition occurred on the catalytic surface and operate the TCRS at lower fuel split but at higher reforming temperature.
- Position the recuperative reformer right after the engine before the turbocharger. In this case the reforming temperature would be much higher (>1300°F) and the TCRS

efficiency would be essentially increased. The fuel split would also be increased while preventing carbon deposition.

- Inject additional steam into the fuel stream which would potentially resolve the carbon deposition situation.
- Find a new catalyst formulation that could tolerate the relatively low water vapor to methane ratio that occurs when recirculated exhaust gas from the engine is the only source of steam.
- Extract water vapor from the exhaust gas after recuperative reformer and add the water to the reforming mixture at the reformer inlet. The water vapor can be extracted by using a water vapor membrane or condenser.
- Evaluate other catalyst systems and catalyst coating techniques for improved performance and endurance.
- Find a new catalyst formulation that would be tolerant to carbon deposition or prevent it. The following resolve the issues with TCRS performance.
- Evaluate operating the TCRS with a lower fuel split (percentage of total natural gas fuel to reformer) but at higher reforming temperature and determine whether carbon deposition occurs.

To evaluate the above strategies, it is recommended that the TCR be initially operated independently of the engine. It is also recommended that the test facility be modified and equipped such that gas sampling capabilities are capable of collecting needed spatial information pertaining to natural gas decomposition rates and resulting concentrations of hydrogen and carbon monoxide. Lack of related data makes it virtually impossible to predict with confidence the level of achievable conversion efficiencies. Prediction of natural gas conversion efficiencies is vital for the eventual sizing and design of a commercially successful recuperative reformer. Related expertise must be obtained in a follow on project, which must also collect catalyst performance data.

It is recommended that Energy Commission, the natural gas industry, and Cummins, Inc. build upon the work completed to date and continue to pursue the development and commercialization of an advanced, optimized design of the TCR process for reciprocating internal combustion engines.

Such an optimized design is extremely complex due to the interaction of a multitude of processes governed by chemical kinetics, chemical equilibrium considerations, chemical reaction catalysis, radiation heat transfer, and convective heat transfer.

Reliable, theoretical modeling of the TCR process has too many limitations. Instead, verifiable experimental results need to be obtained that closely simulate actual chemical reaction and operating conditions and that will duplicate actual heat transfer conditions.

It is strongly recommended that that the laboratory test set-up is modified to include the capability to spatially measure the concentrations and temperatures of reaction products from reactor inlet to reactor outlet.

Only this kind of data will provide reaction rate information. These kinetic data will prove invaluable in optimizing the yield of hydrogen and carbon monoxide. They will also assist in selecting the best-suited and least expensive catalyst for commercial TCR reformer applications.

5.4 Benefits to California

This project was designed and executed to help meet the PIER goal of improving the energy cost and value of California's electricity by providing a cost-effective, technology solution for reciprocating engines that are required to comply with the CARB 2007 emission limits for distributed generation. Gas-fired reciprocating internal combustion engines in DG applications are the lowest capital cost prime movers with the highest efficiency in the 1-10 MW size range with cost far below competing prime mover technologies. Adding selective catalytic reduction (SCR) to lean burn engines will add significant capital cost without any efficiency benefit and lead to increased operating and maintenance costs. Achieving the CARB 2007 emission limits with a concurrent gain in efficiency would help maintain the cost competitiveness of reciprocating engine DG and combined heat and power (CHP) systems. Cummins is proceeding with development of the advanced three way catalyst system with stoichiometric cooled EGR operation for future products destined for very low emissions markets such as California. If commercially successful, this product would provide greater choices for California energy consumers and ratepayers.

If the thermo chemical recuperation technology developed in this project can eventually be commercialized and integrated with reciprocating internal combustion engines, such a product would support attainment of the Senate Bill 1250 (SB 1250) Goals for PIER, which are to "develop and help bring to market, energy technologies that provide increased environmental benefits, greater system reliability, and lower system costs," and to develop "advanced electricity generation technologies that exceed applicable standards to increase reductions in greenhouse gas emissions from electricity generation, and that benefit electric utility customers."

GLOSSARY

ARES	Advanced Reciprocating Engine Systems
ARICE	Advanced Reciprocating Internal Combustion Engine
ASSET	Automated System Software for Engine Testing
ATF	Adiabatic Flame Temperature
ATWC	Advanced Three Way Catalyst
BTE	Brake Thermal Efficiency
CAP	Critical Adjustment Parameters
CARB	California Air Resources Board
CFD	Computational Fluid Dynamics
CHP	Combined Heat and Power
COT	Compressor Outlet Temperature
COV	Coefficient of Variance
CRPT	Cummins Rapid Prototype Controls
CTC	Cummins Technology Center
DG	Distributed Generation
EGR	Exhaust Gas Recirculation
FTIR	Fourier Transform Infra-Red
GC	Gas Chromatograph
GHSV	Gas Hourly Space Velocity

GTI	Gas Technology Institute
H/CR	Hydrogen/Carbon Ratio
HRR	Heat Release Rate
HSDA	High Speed Crankshaft Synchronous Data Acquisition System
HYSYS	Process model licensed by Aspen
IC	Internal Combustion
IMEP	Indicated Mean Effective Pressure
IMT	Intake Manifold Temperature
kWe	Kilowatt Electric
LB	Lean Burn
LFS	Laminar Flame Speed
MSA	Measurement System Analysis
REG	Recycled Exhaust Gas
RR	Recuperative Reformer
S/CR	Steam/Carbon Ratio
SCR	Selective Catalytic Reduction
SESI	Stoichiometric Engine, Spark Ignition
TCR	Thermo Chemical Recuperation
TCRS	Thermo Chemical Recuperation System
TWC	Three-Way Catalyst
UHC	Unburned Hydrocarbons

REFERENCES

Task 2-Thermo Chemical Recuperation System Development- 2.1 Laboratory Evaluation of Recuperative Reformer- Interim Report, March 2008, CEC 500-06-038

Task 2-Thermo Chemical Recuperation System Development- 2.2 Pilot Scale TCR System Development- Interim Report, August 2008, CEC 500-06-038

Task 2-Thermo Chemical Recuperation System Development- Subtask 2.2- Task 2.3 Development of Full-Scale TCR System for 331 kWe Engine, Interim Report, March 2011, CEC 500-06-038

Task 3.1: Project Work Plan for QSK19G Engine Development, Optimization, and Integration with TCR System, Interim Report, March 2008, CEC 500-06-038

Task 3-Develop QSK19G Engine and After Treatment System for Hydrogen Enriched Pipe line Natural Gas Task 3.2: Hydrogen Enrichment Testing of Baseline QSK19G Engine, Interim Report, March 2008, CEC 500-06-038

Task 3-Develop QSK19G Engine and After Treatment System for Hydrogen Enriched Pipe line Natural Gas. Develop Enhanced In-Cylinder Combustion Heat Release Rate Models for use with Hydrogen Enriched Gaseous Fuels, Interim Report, September 2008

Task 3-Develop QSK19G Engine and After Treatment System for Hydrogen Enriched Pipe line Natural Gas. Task 3.4- Design Optimal Combustion Recipe for the QSK19G Engine Using Hydrogen-Enriched Pipeline Natural Gas, Interim Report, April 2009, CEC 500-06-038

Task 3-Develop QSK19G Engine and After Treatment System for Hydrogen Enriched Pipe line Natural Gas. Task 3.5- Design, Procure, Assemble and Test the Hydrogen-Enriched Pipeline Natural Gas QSK19G Combustion Recipe and After Treatment System, Interim Report, January 2011, CEC 500-06-038

Task 2-Thermo Chemical Recuperation System Development, Subtask 2.3 Development of Full-Scale TCR System for 331 kWe Engine and Task 4- DEMONSTRATE INTEGRATED TCR, QSK19G ENGINE AND AFTERTREATMENT SYSTEM- Subtask 4.1- Integrate and Test TCR System with QSK19G Engine and After-treatment Designed for Hydrogen-Enriched Pipeline Natural Gas, Interim Report, March 2011, CEC 500-06-038