Energy Research and Development Division
FINAL PROJECT REPORT

LOAD MODELING TRANSMISSION RESEARCH

Prepared for: California Energy Commission
Prepared by: Lawrence Berkeley National Laboratory

AUGUST 2008
CEC-500-2013-118

PREPARED BY:

Primary Author(s):
Bernard Lesieutre
Richard Bravo
Robert Yinger
Dave Chassin
Henry Huang
Ning Lu
Ian Hiskens
Giri Venkataramanan

Lawrence Berkeley National Laboratory
Berkeley, CA

Contract Number: UC MR-049

Prepared for:

California Energy Commission

Jamie Patterson
Contract Manager

Fernando Pina
Office Manager
Energy Systems Research Office

Laurie ten Hope
Deputy Director
ENERGY RESEARCH AND DEVELOPMENT DIVISION

Robert P. Oglesby
Executive Director

DISCLAIMER

This report was prepared as the result of work sponsored by the California Energy Commission. It does not necessarily represent the views of the Energy Commission, its employees or the State of California. The Energy Commission, the State of California, its employees, contractors and subcontractors make no warranty, express or implied, and assume no legal liability for the information in this report; nor does any party represent that the uses of this information will not infringe upon privately owned rights. This report has not been approved or disapproved by the California Energy Commission nor has the California Energy Commission passed upon the accuracy or adequacy of the information in this report.

ACKNOWLEDGEMENTS

The authors would like to thank Larry Miller, Lloyd Cibulka, Jim Cole, and Merwin Brown of the California Institute for Energy and Environment. The researchers also thank members of the WECC Load Modeling Task Force for their technical assistance and guidance. The authors also thank Dmitry Kosterev and Steve Yang of the Bonneville Power Administration for their contributions to this work through the testing of air conditioning units at BPA facilities, and continued engagement in and support for load modeling activities.

The authors thank the California Energy Commission for providing the funding for this research project.

This project comprises many sub tasks. The principal researchers and report authors for these tasks are listed below. Bernard Lesieutre (LBNL) compiled this final report from task reports and white papers. (See appendices.)

The testing of AC units at SCE was led by Richard Bravo and Robert Yinger. The testing of AC units at BPA was conducted by BPA staff with assistance from Bernard Lesieutre (LBNL).

The development of the performance model was led by Henry Huang and Ning Lu (PNNL). The development of the dynamic phasor model was led by Bernard Lesieutre (LBNL).

The research on potential solutions to the delayed voltage recovery problems was led by Richard Bravo and Robert Yinger (SCE).

The research and development for the load composition data tool was conducted by David Chassin (PNNL).

The research for the white paper on load monitoring was conducted by Henry Huang (PNNL).

The research for the white paper on uncertainty analysis was conducted by Ian Hiskens (University of Wisconsin-Madison).

The white paper on solar generation and load models was written by Giri Venkataramanan (University of Wisconsin-Madison).

The white paper on fault-induced delayed voltage recovery was written by Bernard Lesieutre (LBNL)

The research on motor protection was led by Bernard Lesieutre (LBNL).

PREFACE

The California Energy Commission Energy Research and Development Division supports public interest energy research and development that will help improve the quality of life in California by bringing environmentally safe, affordable, and reliable energy services and products to the marketplace.

The Energy Research and Development Division conducts public interest research, development, and demonstration (RD&D) projects to benefit California.

The Energy Research and Development Division strives to conduct the most promising public interest energy research by partnering with RD&D entities, including individuals, businesses, utilities, and public or private research institutions.

Energy Research and Development Division funding efforts are focused on the following RD&D program areas:

- Buildings End-Use Energy Efficiency
- Energy Innovations Small Grants
- Energy-Related Environmental Research
- Energy Systems Integration
- Environmentally Preferred Advanced Generation
- Industrial/Agricultural/Water End-Use Energy Efficiency
- Renewable Energy Technologies
- Transportation

Load Modeling Transmission Research is the final report for the WECC Load Modeling Transmission Research project (contract number 500-02-004), work authorization number MR-049 conducted by Lawrence Berkeley National Laboratory. The information from this project contributes to Energy Research and Development Division's Energy Systems Integration Program.

For more information about the Energy Research and Development Division, please visit the Energy Commission's website at www.energy.ca.gov/research/ or contact the Energy Commission at 916-327-1551.

ABSTRACT

The research presented in this report primarily focused on improving power system load models to better represent their impact on system behavior. The previous standard load model failed to capture delayed voltage recovery events that are observed in the Southwest and elsewhere. These events are attributed to stalled air conditioner units after a fault. Typical air conditioner units were tested in laboratories to gain a better understanding of their role in these events and to guide modeling efforts. New load models were developed to match air conditioner behavior using data obtained from these extensive tests. An air conditioner model was incorporated in the new Western Electricity Coordinating Council composite load model. These models were used in dynamic studies of the West and can impact power transfer limits for California. Unit-level and system-level solutions were proposed as potential solutions to the delayed voltage recovery problem.

Keywords: Electricity grid, reliability, load models, air conditioners, fault-induced delayed voltage recovery, load composition, single-phase induction motor, compressors, voltage stability.

Please use the following citation for this report:

Lesieutre, Bernard, Richard Bravo, Dave Chassin, Ian Hiskens, Henry Huang, Ning Lu, Giri Venkataramanan, and Robert Yinger. 2010. *Load Modeling Transmission Research Project*. California Energy Commission, PIER Program. CEC-500-2013-118.

TABLE OF CONTENTS

Acknowledgements i

PREFACE ii

ABSTRACT iii

TABLE OF CONTENTS iv

LIST OF TABLES ix

EXECUTIVE SUMMARY 1

Introduction 1

Project Purpose 1

Project Results 2

Project 4

Benefits 4

CHAPTER 1: Introduction 5

1.1 Background 5

1.2 Overview of Research, Results, and Recommendations 9

1.2.1 Air Conditioner Testing and Modeling 9

1.2.2 Air Conditioner Modeling 10

1.2.3 Potential Solutions to Delayed Voltage Recovery 11

1.2.4 Load Composition Data Tool 12

1.2.5 Load Monitoring 12

1.2.6 Uncertainty Analysis 13

1.2.7 Solar Generation and Load Models 13

1.2.8 Fault-Induced Delayed Voltage Recovery 14

1.2.9 Motor Protection 14

1.3 Summary 15

1.3.1 Benefits to California 15

CHAPTER 2: Air Conditioner Modeling 17

2.1 Introduction 17

2.2 Task Approach 17
2.2.1 Laboratory Testing 17
2.2.2 Performance Model 18
2.2.3 Dynamic Phasor Model 19
2.3 Task Results 20
2.3.1 Test Results 20
2.3.2 Performance Model 28
2.3.3 Dynamic Phasor Model 28
2.4 Conclusions and Recommendations 39
2.4.1 Conclusions 39
2.4.2 Recommendations 40
2.4.3 Benefit to California 40
CHAPTER 3: Potential Solutions to Delayed Voltage Recovery 41
3.1 Introduction 41
3.2 Task Approach 41
3.2.1 Unit Level 41
3.2.2 System Level 42
3.3 Task Results 42
3.3.1 Unit Level 42
3.3.2 System Level 43
3.3.3 Economic Assessment 44
3.4 Conclusions and Recommendations 45
3.4.1 Conclusions 45
3.4.2 Recommendations 45
3.4.3 Benefit to California 45
CHAPTER 4: Load Composition Data Tool 46
4.1 Introduction 46
4.2 Task Approach 47

4.3 Task Results 49
4.4 Conclusions and Recommendations 50
4.4.1 Conclusions 50
4.4.2 Recommendations 50
4.4.3 Benefits to California 50
CHAPTER 5: Load Monitoring 51
5.1 Introduction 51
5.2 Task Approach 51
5.3 Task Results 52
5.3.1 Load Monitoring Device Options 52
5.3.2 Existing Load Monitoring Examples 53
5.4 Conclusions and Recommendations 54
5.4.1 Conclusions 54
5.4.3 Recommendations 56
5..4.4 Benefits to California 56
CHAPTER 6: Uncertainty Analysis 57
6.1 Introduction 57
6.2 Task Approach 57
6.2.1 Trajectory Sensitivities 58
6.2.2 Test System 60
6.3 Task Results 61
6.3.1 Uncertainty Analysis 61
6.3.2 Parameter Ranking 62
6.3.3 System Stress Indicator 63
6.3.4 Parameter Estimation 64
6.4 Conclusions and Recommendations 65
6.4.1 Recommendations 66
6.4.2 Benefits to California 66

CHAPTER 7: Solar Generation and Load Models 67
7.1 Introduction 67
7.2 Task Approach 67
7.3 Task Results 68
7.3.1 PV System Models 68
7.3.2 PV System Modeling Issues 69
7.3.3 Candidate System Model 74
7.4 Conclusions and Recommendations 75
7.4.1 Conclusions 75
7.4.2 Recommendations 75
7.4.3 Benefit to California 76
CHAPTER 8: Fault-Induced Delayed Voltage Recovery 77
8.1 Introduction 77
8.2 Task Approach 78
8.3 Task Results 78
8.3.1 FIDVR Phenomenon 78
8.3.2 Solutions 81
8.4 Conclusions and Recommendations 84
8.4.1 Conclusions 84
8.4.2 Recommendations 84
8.4.3 Benefits to California 84
CHAPTER 9: Motor Protection 85
9.1 Introduction 85
9.2 Project Approach 85
9.3 Project Results 86
9.3.1 Test Results 86
9.3.2 National Electric Code 88
9.4 Conclusions and Recommendations 91

9.4.1 Conclusions 91
9.4.2 Recommendations 91
9.4.3 Benefit to California 91
REFERENCES 92
GLOSSARY 96

LIST OF FIGURES

Figure 1 Typical Delayed Voltage Recovery 7
Figure 2 Delayed Voltage Recovery 7
Figure 3 WECC Composite Load Model 8
Figure 4 Power/Voltage Curves 19
Figure 5 Stall Current 22
Figure 6 Stall Real and Reactive Power 23
Figure 7 Pressure Relief Valve 24
Figure 8 Thermal Protection Switch Tripping Time 25
Figure 9 Contactor Dropout Voltage 27
Figure 10 Voltage ramp measured at terminal of motor. The voltage initially is 0.98 pu. 29
Figure 11 Measured and simulated active power 30
Figure 12 Measured and simulated reactive power 30
Figure 13 Voltage Oscillation Test. The applied voltage varies between 90% and 110% of nominal at frequencies: 0.1 Hz, 0.25 Hz, 0.7 Hz, 1.5Hz, and 2 Hz. 31
Figure 14 Active Power, simulated and calculated from measurements for the voltage oscillation test. 32
Figure 15 Reactive Power, simulated and calculated from measurements for the voltage oscillation test. 32
Figure 16 Simulation voltage consistent with laboratory voltage. The voltage magnitude increases as frequency decreases because the supply line voltage drop decreases 33
Figure 17 Frequency. The frequency drops from 60Hz to 58.5Hz and returns to 60Hz in 0.25Hz increments. 34
Figure 18. Calculated and simulated active power. The response is small and proportional to frequency. 35
Figure 19 Calculated and simulated reactive powers. The reactive power increases with decrease in frequency. 35

Figure 20 Plot of active power for 3-cycle 52% voltage sag test. The motor stalls. 37

Figure 21 Plot of reactive power for 3-cycle, 52% voltage sag test. The motor stalls. 37

Figure 22 Plot of active power for 3-cycle, 54% voltage sag test. The motor recovers. (Note that the apparent delay in measured response, approximately 1 cycle, is due to calculation of power from data – using a 1-cycle window.) 38

Figure 23 Plot of reactive power for 3-cycle, 54% voltage sag test. The motor recovers. (Note that the apparent delay in measured response, approximately 1 cycle, is due to calculation of power from data – using a 1-cycle window.) 39

Figure 24 System-Level Solutions Simulations 44

Figure 25. The WECC composite load model structure includes static loads, electronic loads, constant-torque three-phase motors (A), high inertia speed-squared load motors (B), low inertia speed-squared load motors (C), and constant-torque single-phase motors (D). 47

Figure 26 Curve Decomposition for Top-Down Load Composition Analysis 54

Figure 27 IEEE 39 bus system 61

Figure 28 Zone 3 protection on line 23-24, 95% confidence interval bounds. 62

Figure 29 Trajectory sensitivities for all load indices. 63

Figure 30 Trajectory and sensitivity variation for increasing system stress. 64

Figure 31 Block diagram of typical grid-connected PV system 68

Figure 32 A graph of measured direct and diffuse irradiance on (a) a summer day, and (b) a winter day (From Thomson 2007) 70

Figure 33 Response of the PV generator to increase and decrease in grid voltage (From Yun 2004) 72

Figure 34 V Voltage tolerance curves of 9 commercial PV inverters (From Kunte 2008) 73

Figure 35 Structure of a candidate PV system model to be incorporated within the framework of load modeling 75

Figure 36. Torque Speed Curve for Motor. 79

Figure 37 Contactor Model (LMTF 2006) 86

Figure 38 Thermal Relay Characteristic (LMTF 2006) 87

Figure 39 Thermal relay model (LMTF 2006) 88

LIST OF TABLES

Table 1 Stall Window 21

Table 2 Stall Calculation 26

Table 3 Stalling Time after Contactor Reclosed 27
Table 4 Unit Level Devices Test Results 43
Table 5 Economic Assessment 45
Table 6 Prototype Conditions 49
Table 7 Prototype Load Composition 50
Table 8 Features of Different Monitoring Options 52

EXECUTIVE SUMMARY

Introduction

Grid planning and operating decisions rely on simulations of the dynamic behavior of the power system. Both technical and commercial segments of the industry must be confident that the simulation models and databases are accurate and up to date. A grid operator may unknowingly operate the system beyond its capability if the transfer limits are set using overly optimistic models, thereby increasing the risk of widespread outages, such as occurred during the summer of 1996. A grid operator may be overly conservative and impose unnecessary restrictions on the transfer paths if the models are pessimistic, thereby unnecessarily raising electricity costs or increasing the risk of power shortages in energy deficient regions. Having realistic models is therefore very important for ensuring reliable and economic power system operation.

Southern California Edison (SCE) and other utilities experience occurrences of delayed voltage recovery following faults on their electrical systems. Under normal conditions voltage recovers to nominal levels less than one second after the fault is cleared, but over the past few years there have been several instances at some SCE substations when voltage recovery was delayed for more than 30 seconds after normal fault clearing. These events primarily occurred during the heavy summer load at substations located in hot climates and serving new housing developments. Stalling air conditioner (AC) units were believed to have caused the delayed voltage recoveries.

Project Purpose

The purpose of this research was to improve the accuracy of load models in general, and air conditioner models in particular. Success relied on coordination with the Western Electricity Coordinating Council (WECC), which establishes base case models for dynamic studies for the Western Interconnection. Failure to address this modeling problem either increases the risk to California's electricity supply by grid instabilities and outages or reduces the amount of power that can be imported into and transported within California.

The high priority objectives for this project included:

- Testing AC units to understand their behavior and how they can impact the grid.
- Developing improved load models to represent AC load behavior in grid studies.
- Identifying potential solutions to mitigate the delayed voltage recovery problem.
- Developing a load composition data tool for the new WECC composite load model.

Additional research was directed toward producing white papers on other load modeling issues. These included:

- Technologies supporting and applications for load monitoring.
- Uncertainty and sensitivity analyses.

- Solar generation and load models
- Review of nationwide occurrences and potential solutions for Fault-Induced Delayed Voltage Recovery (FIDVR), which is becoming the accepted name for the delayed voltage recovery phenomenon.
- Review of motor protection and its application in load modeling.

Project Results

Researchers developed a new composite load model to improve the accuracy of grid simulations. Researchers on this project were members of a load modeling task force and the models developed here were incorporated into the new model.

For AC modeling, the primary results included:

- Testing of multiple units at SCE and Bonneville Power Administration (BPA).
- Development of two load models to represent AC load behavior – a static performance model and a dynamic phasor model. Both of these models captured the fundamental features observed in laboratory tests.
- The performance model was incorporated into the WECC composite load model in the Positive Sequence Load Flow (PSLF) simulation software. The dynamic phasor model is being programmed in the PSLF.
- Research was conducted on identifying potential solutions to mitigate delayed voltage recovery. The solutions included potential unit-level solutions and system level solutions. In the short term a practical approach may combine both. In the long term, changes in manufacturing standards would provide the most direct solution.
- Specifications for the load composition data tool were completed and a prototype was developed.

The white papers concluded that:

- Load monitoring was valuable for model validation and may help with estimating load composition and control performance. The white paper reviewed monitoring technologies suitable for these purposes.
- Sensitivity models were needed to understand the models used to simulate the grid. This sensitivity model could be used to guide model validation and to perform uncertainty analyses.
- Solar generators were connected through power electronic controls whose dynamics need be considered in models. Many installations will reside within traditional distribution networks and a representation for this could be added to the WECC composite load model.

- Fault-induced delayed voltage recovery occurs across the nation. Comparing and coordinating of research efforts were underway and have been the subject of two United States Department of Energy (DOE)-sponsored workshops between the power industry and AC manufacturers.
- Motor protection was deemed necessary for accurate load models. The "delay" in delayed voltage recovery was due to the action of thermal protection. Motor protection on other installations needed attention.

Extensive progress was made on load modeling since this research project began. The testing and analysis of AC has led to the development of models to represent their behavior. WECC has introduced a new composite load model that included the models resulting from this research project. The load composition data tool was designed to fill in the details required for the new load model. Project researchers have been leaders in the national discussion on fault-induced delayed voltage recovery, and the results and models from this research program informed that discussion. These activities demonstrated that the research conducted for this project was already being used by industry.

The primary goals of studying the delayed voltage recovery problem and improving models were met. The research on the best short- and long-term solutions was continuing.

It is imperative that California further investigate ways to mitigate AC stalling to prevent FIDVR events that can have a negative impact on the grid or in a drastic scenario in which grid operation is compromised.

The white papers conducted under this project investigated other emerging issues with load models, some of which were already under investigation. Two new priority load modeling research topics were identified.

New and improved load models and load composition methods were developed for use in the WECC region that was studied in this project. Continuing research is needed to develop and analyze sensitivity models to assist with model validation. Researchers also recommended continuing research on load monitoring to support load modeling activities for system validation and the potential use of top-down load models. Load-monitoring activities associated with direct load control offer opportunities not only for better load models but also for loads to assist grid reliability.

As distributed photovoltaic (PV) systems become more widespread there is increasing concern about possible impacts on the electric system, especially within or adjacent to areas of high penetration. PV generators couple through an inverter circuit in contrast to typical power electronic loads that couple to the grid through a rectifier circuit. The controls for power electronic grid coupling introduce dynamics related to voltage and frequency that are not present in power electronic loads. New dynamic models for PV systems suitable for grid simulations are needed to examine possible impacts and potential solutions.

Project Benefits

The goal of this project was to develop specific models to improve the accuracy of dynamic simulations. There was a specific emphasis on the delayed voltage recovery problem that has a direct benefit to California. California utilities are known to be susceptible to fault-induced delayed voltage recovery. This research improved the fundamental understanding of the phenomenon and the results and models were guiding decisions to help mitigate the problem. A specific benefit of such mitigation was to decrease the likelihood that such events will be contained and will not lead to widespread outage.

Additional white papers were directed towards related dynamic load modeling issues. Better dynamic load models offer several benefits to California. Improved models aid the decision process for the investment in system solutions to the delayed voltage recovery problem and other dynamic issues. The use of improved models in system studies will increase confidence in the specification of path rating and the deployment of remedial action schemes, which will in turn increase confidence in operations.

CHAPTER 1: Introduction

The research presented in this report focuses on power system loads and their impact on system dynamic behavior. Unusual delayed voltage recovery events in Southern California motivated this work. Correspondingly, much of this program's research addressed the causes, modeling, and solutions to these types of events. These research activities supported and were supported by the WECC Load Modeling Task Force (LMTF). Members of the LMTF served as technical advisors for this work, and supported complementary research projects. The results of this research program directly contributed to activities of the LMTF, and are being incorporated into system planning studies in WECC. The results are also informing potential policy decisions in the industry with regard to air conditioner units.

This chapter reviews the background motivating this program, provides an overview of the research activities, and summarizes the results and recommendations of this work.

1.1 Background

Grid planning and operating decisions rely on simulations of dynamic behavior of the power system. Both technical and commercial segments of the industry must be confident that the simulation models and database are accurate and up to date. If the transfer limits are set using overly optimistic models, a grid operator may unknowingly operate the system beyond its capability, thereby increasing the risk of widespread outages, such as occurred during summer 1996 outages. If the models are pessimistic, a grid operator may be overly conservative and impose unnecessary restrictions on the transfer paths, thereby unnecessarily raising electricity costs or increasing the risk of power shortages in energy deficient regions. Therefore, having realistic models is very important to ensure reliable and economic power system operation.

A power system model consists of generator, transmission and load models. Load representation is the most challenging and the least accurate of these three components. A vast amount of work has been done over the last 30 years including two issues of Institute of Electrical and Electronic Engineers (IEEE) load modeling recommendations and literally hundreds of technical papers worldwide. Yet the sheer magnitude of the modeling of load components, the complexity of the load compositions and the hourly and seasonal change in loads in the real system represent a challenge to load representation in power system studies.

In 2001, an "interim" composite load model containing a static part and a dynamic part (modeled essentially to IEEE load modeling recommendations) was developed and implemented in the WECC. This was a first of its kind region-wide implementation in North America in a North American Electric Reliability Council region. The model was designed primarily to capture the effects of dynamic induction motor loads for highly stressed North to South oscillatory flow conditions during summer peaks in the WECC, which can limit power imports into California, or alternatively, increase the risk of relying on higher levels of imports. At the time of its implementation, the WECC Modeling and Validation Work Group (MVWG)

stated that the "interim" model should be replaced with a full-scale composite load model WECC-wide. The WECC LMTF was assigned this task in 2002.

The interim motor model did not capture significant dynamic phenomena that have been observed in certain locations of the WECC. Of particular concern is the inability of the interim load model to represent a delayed voltage recovery from transmission fault. In one particular event, it took approximately 30 seconds for voltage to recover, while the simulations predicted almost instantaneous voltage recovery. Further improvement to the interim model is required also in the simulation of the power oscillations on the California – Oregon Intertie and other key interties in the WECC. Accurate load models are required to assess the damping of power oscillations. To improve models it useful to examine events to understand their cause.

SCE and other utilities experience occurrences of delayed voltage recovery following faults on their electrical systems as shown in Figure 1. Under normal conditions voltage recovers to nominal levels less than one second after the fault is cleared, but over the past few years there have been several instances at some SCE substations when voltage recovery was delayed for more than 30 seconds after normal fault clearing. These events primarily occurred during the heavy summer load at substations located in hot climates and serving new housing developments. Stalling air conditioner units are believed to be causing the delayed voltage recoveries.

Figure 1 shows a typical delayed voltage recovery profile on a SCE 220 KV circuit. This figure indicates that right after the fault, voltage decreased to 79 percent of nominal voltage (point 1). The radial distribution circuit voltage being much lower, the dip in voltage caused air conditioning units to stall; the stalled air conditioning units kept the voltage from recovering to a nominal level (point 2). When the air conditioner units' thermal overload protection switches tripped, the voltage recovered, but overshot the nominal voltage (in this case 6 percent above). Because the capacitor banks were still connected to the circuit an over-voltage occurred (point 3). This over-voltage caused another problem, the capacitor banks tripping off (point 4). With the capacitors tripped off and the load (including air conditioners) returning, the voltage went below the nominal voltage (points 5 & 6) making the circuit more vulnerable to other similar chains of events.

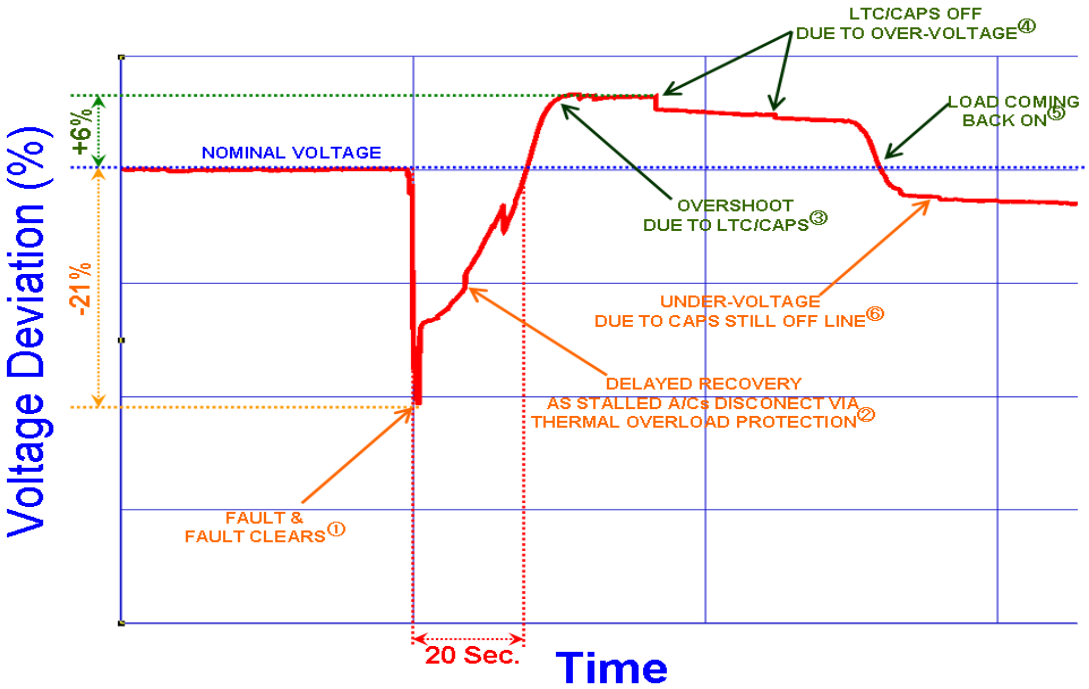

Figure 1 Typical Delayed Voltage Recovery

The WECC interim load model did not replicate the observed system response of the delayed voltage recovery events. Specifically, the WECC motor model does not accurately represent the behavior of small induction motors used in air conditioner compressors. This mismatch of real measurements versus the WECC interim load model is shown in Figure 2.

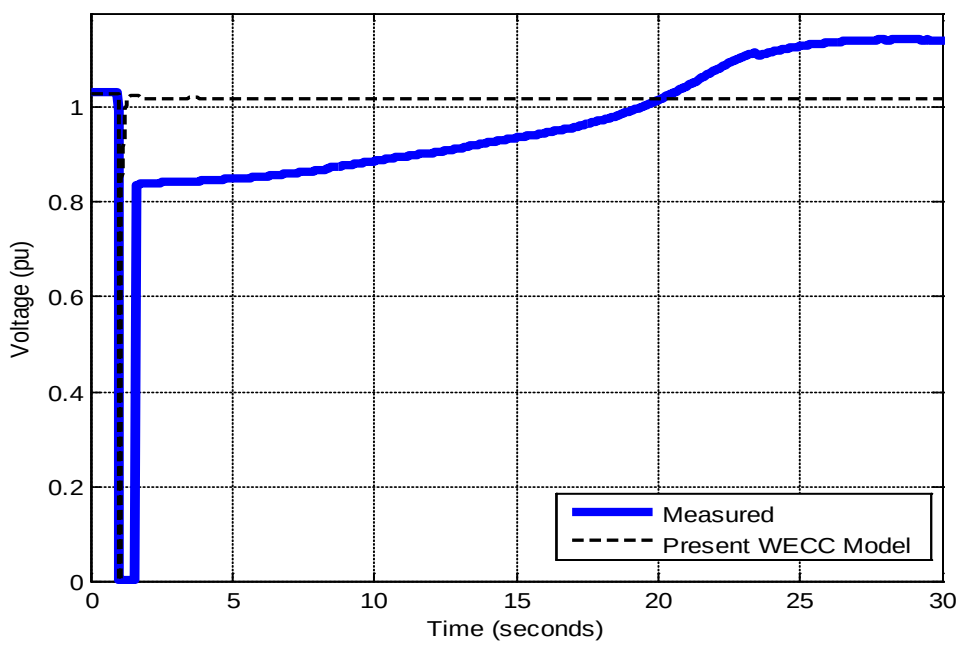

Figure 2 Delayed Voltage Recovery

The purpose of this research program is to improve the accuracy of load models in general, and air conditioner models in particular. In addition to improved modeling, researchers investigated ways to mitigate the negative impact of stalled air conditioners on the grid. Failure to address this modeling problem either increases the risk to California electricity supply by grid instabilities and outages, or reduces the amount of power that can be imported into, and transported within, California.

The new WECC Composite Load Model is shown below in Figure 3. This detailed model enables simulations to replicate observed behavior in measurements. The model includes an electrical representation for a distribution system including a substation transformer, shunt reactances, and a feeder equivalent. This presents the realistic separation of end-use load from the transmission network. The end-use load models include four types of motor models, including representations for three phase air conditioners and single-phase air conditioners. It also includes a separate characteristic for electronic loads – which increases in percentage and importance of load.

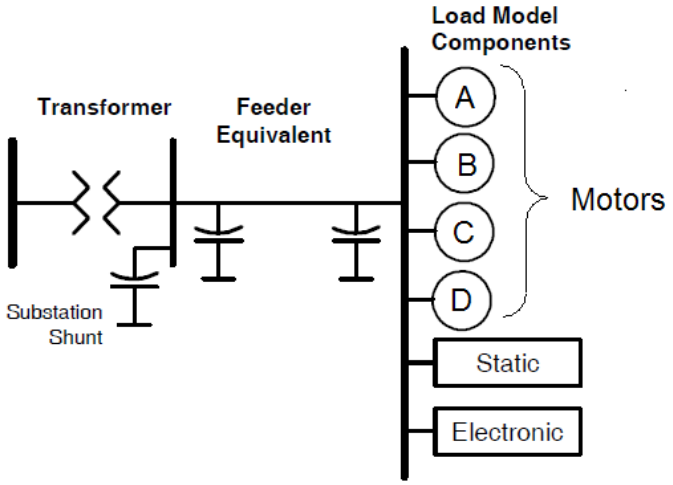

Figure 3 WECC Composite Load Model

Formerly the interim load model was uniformly applied across the entire system. The new composite load model is intended to vary. It is recognized, for instance, that air conditioner load is not uniform across the system, nor heating load, industrial load, etc. With the new model comes a challenge of describing the load characteristics for each location.

The remainder of this chapter contains an introduction to the research projects and a summary of results and recommendations. The subsequent chapters discuss the individual projects in some detail, leaving the complete details to reports attached in the appendices.

1.2 Overview of Research, Results, and Recommendations

The primary research projects conducted under this program were aimed to better load model representation in WECC. There was particular interest in air conditioner loads to characterize the observed delayed voltage recovery phenomenon. On this topic there were three area of research:

1. Air conditioner testing and modeling
2. Potential Solutions to the delayed voltage recovery problem

These topics are the subjects of Chapters 2-3 respectively.

The load model data tool to help vary the composite load model by location is presented in Chapter 4:

3. Load composition data tool

In addition to these main topics listed above and mentioned in Section 1.1, several preliminary studies were conducted to examine research needs in areas relevant to load modeling. These include

4. Load monitoring (Chapter 5)
5. Uncertainty analysis (Chapter 6)
6. Solar generation and load models (Chapter 7)
7. Fault-induced delayed voltage recovery (Chapter 8)
8. Motor protection (Chapter 9)

1.2.1 Air Conditioner Testing and Modeling

1.2.1.1Air Conditioner Testing

Air conditioner units were acquired and tested by staff at Southern California Edison and Bonneville Power Administration. SCE acquired 10 units, and BPA acquired 18 units. Tests were conducted to reveal the dynamic behavior of the loads subject to fault conditions and system voltage and frequency oscillations. The conditions contributing to stall were characterized, including temperature, voltage, fault duration and type of unit.

Principal Findings:

- Air conditioners are prone to stall quickly – even for short duration, normally-cleared faults.
- Stalled currents, active power, and reactive power levels are multiples of nominal values
- Unit-level under-voltage contacts do not remove stalled air-conditioners from the system. (That is, the observed voltage sags still exceed the level at which they act.)
- Unit-level thermal protection eventually will remove the stalled units from the system.

These characteristics are consistent with the observed delayed voltage recovery phenomenon: units stall quickly – high stall current pulls down the system voltage – voltage recovers as thermal protection removes units from the system after some delay – the recovered voltage exceeds the pre-fault level due to load loss.

1.2.2 Air Conditioner Modeling

Guided by data collected from the tests, project researchers used both a top-down and a bottom-up approach to develop two different types of models for air conditioning units. The static "performance model" (top-down) represents the active and reactive consumptions as a function of temperature and voltage. There are three regimes of operation: running, stalled, and tripped (off-line). For each regime, a polynomial function of voltage is used.

Principal Finding:

- The static performance model gives a good match to static running and stall characteristics of tested units.

Principal Result:

- The performance model has been incorporated into the PSLF model for the WECC composite load model.

WECC members have run and are analyzing simulations of the Interconnect with this model in place.

The second model, the "dynamic phasor model," (bottom-up) was developed from first principles. The researchers adapted a standard single phase induction motor model - the type of motor driving air-conditioner compressors – to a form suitable for the simulation programs used by WECC. This physically-based model is mathematically represented by nonlinear differential and algebraic equations, and it is similar in form to other motor models used in power system dynamic simulations.

Principal Finding:

- The dynamic phasor model gives a good match to static and dynamic behavior observed in unit tests.

Principal Result:

- WECC has hired a consultant to program the dynamic phasor model in the PSLF simulation software.

These two models are relatively new and are currently under necessary evaluation by WECC members.

Recommendation: WECC members evaluate the performance model and the dynamic phasor model in their studies.

1.2.3 Potential Solutions to Delayed Voltage Recovery

Testing units, understanding the phenomenon, and the use of better models does not solve the problem. To address the problem with potential solutions, project researchers examined unit-level solutions and system-level solutions. Generally unit-level solutions involve removing the stalled units as quickly as possible and the corresponding project tested different technologies for achieving this object. Perhaps the most promising in the short time frame is the use of controllable thermostats. The system level solutions consider fast-acting controlled reactive power sources.

Principal Recommendation:

- A practical near-term potential solution involves both the use of unit-level control to remove the stalled air-conditioner, and system-level control of reactive power.

Because the unit test results show that the air conditioners are prone to stall for normally-cleared faults, there is little opportunity in the short term to prevent this stalling. Once stalled the units must be taken off-line as quickly as possible. Fast reactive power controls are needed to maintain proper system voltage when air conditioner load is lost and then returns a short while later.

The ideal long-term solution involves the design of air-conditioner units that have a certain amount of low-voltage ride through, and to automatically and quickly remove stalled units from service. This type of solution requires cooperation with manufacturers. Motivated by research conducted under this program and recognizing that the delayed voltage recovery is a problem across the country, the U.S. Department of Energy has hosted two workshops between power industry and air conditioner manufacturers to discuss this topic. Researchers on this project were key contributors to the workshop.

Principal Result:

- Two U.S. Department of Energy Workshops on Fault Induced Delayed Voltage Recovery (FIDVR) – April 2008, and September 2009.[1]

NERC has also published a white paper on FIDVR[2]

Recommendation:

- Continue engagement with industry to establish standards to address the delayed voltage recover problem.

---

[1] 2008 workshop presentations are available at http://sites.energetics.com/acstallingworkshop/agenda.html. 2009 workshop presentations have not been posted.

[2] Available at www.nerc.com/docs/pc/tis/FIDV_R_Tech_Ref_V1-1_PC_Approved.pdf.

1.2.4 Load Composition Data Tool

The detailed WECC composite load model is intended to model different end-use loads depending on location. The load composition data tool uses a database with information about different locations (weather, typical end-use load by customer type). Then it helps compute the load model parameters for a given location, guided by the percentage of different customer type at that location: residential, commercial, industrial, and agricultural.

Principal Results:

- Specifications for the load composition data tool. This is necessary for further vendor development.
- Prototype load composition data tool.[3]

Recommendation:

- Use prototype tool for WECC studies, and encourage WECC to pursue development.

1.2.5 Load Monitoring

The goal of load monitoring is to disaggregate load composition by monitoring electrical waveforms on feeders. This white paper focuses on the technologies that may support load monitoring and potential applications.

Principal Finding:

- Monitoring equipment is available that could assist load monitoring
- Applications include providing valuable information for model validation, estimating load composition (potentially in real time), and aiding in load-centered control performance.

As part of a complementary study supported by BPA, researchers have examined electrical signals from monitored feeders to determine if information may be available for load monitoring. Their initial assessment (unpublished to date) is that there is information in the data. However, it would require a major research project to attempt the disaggregation, and it should be considered high-risk, high payoff research.

Recommendation:

- Consider initiating a project on load monitoring.

In comparison to other recommendations, this is should be considered a lower-priority task.

[3] Available at http://sourceforge.net/projects/gridlab-d/files/load-composition/.

1.2.6 Uncertainty Analysis

Load models remain the least certain of modeled elements in system simulations. This white paper examines the use of sensitivity-based models for uncertainty analysis. The paper highlights several uses for sensitivity models.

Principal Findings:

1. Sensitivity-based models can be used to estimate uncertainty in simulations outcomes.
2. Sensitivity-augmented simulations (trajectory sensitivities) can help identify when a simulation result is near instability.
3. Sensitivity-based models can be used to guide parameter estimation for purposes of model validation.

Practical application for the first find is relatively straight-forward: given a simulation result, a sensitivity model expressed in terms of (load model) parameters, and a characterization of the uncertainty in the load model parameters (probability density) – one simply calculates the range of simulation outcomes. Additional research is not required on the mechanics, but estimation of uncertainty in parameter values is needed.

The second finding is explained by noting that an unstable trajectory is highly sensitive to almost all perturbations. Trajectory sensitivities will be high near a point of instability, even if the instability is not directly observed in the result. The tool used to calculate these sensitivity trajectories relies on a particular class of simulation algorithm that, unfortunately, is not used in the most common power system simulation software.

The third finding touches on the important problem of reconciling observed behavior and simulated behavior. This load modeling program was motivated by the inability of the interim load model to represent the delayed voltage recovery problem. The new composite load model has the ability to represent this behavior, but that does not necessarily mean that it will if the model parameters are incorrect. Tuning of model parameters to match observed data, and then validating with more data is important. In a complementary project supported by BPA, researchers have conducted preliminary research on this topic using an approach similar to that outlined in this uncertainty analysis white paper. The results are promising but require a dedicated research project to complete.

Recommendation:

- Initiate a projected dedicated to WECC model validation

1.2.7 Solar Generation and Load Models

This white paper takes a first look at solar generation in distribution systems. While this is not strictly load modeling, it has features similar to load models in a power system context. The installations considered here are widely distributed and relatively small compared to large generating stations.

Solar generation interfaces to the grid through power electronic circuits. When placed in distribution grids they might be considered to appear as negative power electronic loads. However, their controls and operation differ from typical power electronic loads that essentially operate near constant power at unity power factor for a wide range of voltage. The solar power generator power electronics use a Maximum Power Point Tracking (MPPT) function in the DC/DC converter module. This dynamics of this module impacts the dynamics as seen from the grid. This and the impact of protection equipment necessitate the testing and development of a model for use in power grid studies.

Recommendation:

- Conduct and complete comprehensive tests of PV generators and develop a suitable model grid simulations

This should be considered a high priority research item. The white paper indicates that such tests have been initiated by SCE with the National Renewable Energy Lab.

1.2.8 Fault-Induced Delayed Voltage Recovery

This white paper reviews the literature on delayed voltage recover, and presentations at meetings and workshops. The paper provides an explanation for the phenomenon, lists sample reported occurrences, and discusses the potential solutions to the problem.

The short-term practical solutions combine unit-level and system-level design solutions. These are consistent with the solutions discussed in the potential solutions section. The ideal long-term solution involves participation with industry manufacturers to include modifications to unit design to help mitigate or prevent stalling. As noted above, this topic has received considerable attention: it is the subject of a NERC white paper, and has been the focus of two DOE sponsored workshops.

1.2.9 Motor Protection

In part this topic is addressed in the delayed voltage recovery research. The voltage response directly depends on the protection. The "delay" in delayed voltage recovery is a due to the delayed response of thermal protection. For these devices the response of protection has been studied in the laboratory experiments in this program.

A review of the National Electric Code shows that air conditioner protection is treated in a section on its own, and that other motor protection requirements are dictated in another section. These requirements may form a basis for initial modeling motor protection under the assumption that most installations are up to code. A more detailed investigation is warranted to further clarify motor protection installations in practice.

Recommendation: Conduct in-depth study of practical motor protection in installations.

Comment: WECC has initiated a study of this type.

1.3 Summary

The primary objectives of this program were directed towards the development of a new load model that would be suitable for study of the delayed voltage recovery phenomenon. Extensive laboratory experiments were conducted, and load models were developed for this purpose. The near-term practical solutions to this problem appear to involve unit-level control (or thermostatic if possible), and system-level reactive power controls. The best long-term solution is sought with cooperation of manufacturers, and two DOE sponsored workshops have been held with this objective. Continued effort is needed to establish policies and standards to ensure manufacture of units with desirable protection when stalled, or with some low-voltage ride through capability.

The new WECC composite load model is a great improvement over the interim model. It is necessary to populate the model with credible parameters and a prototype load composition data tool has been designed for this purpose.

Recommended new priority load modeling research include

- Sensitivity modeling for parameter estimation and model validation

  New and improved Load Models and Load Composition methods have been developed for use in the Western Electricity Coordinating Council (WECC) region under this project. Continuing research is needed to develop and analyze sensitivity models to assist with model validation. It is also recommended to continue research on load monitoring to support load modeling activities for purposes of system validation and the potential use of top-down load models. Additionally, load-monitoring activities associated with direct load control offer opportunities not only for better load models, but also for loads to assist grid reliability.

- Modeling of controlled power electronic coupled devices, including solar generation.

  As distributed PV systems become more widespread there is increasing concern about possible impacts on the electric system, especially within or adjacent to areas of high penetration. In contrast to typical power electronic loads that couple to the grid through a rectifier circuit, PV generators couple through an inverter circuit. The controls for power electronic grid coupling introduces dynamics related to voltage and frequency that are not present in power electronic loads. New dynamic models for PV systems suitable for grid simulations are needed to examine possible impacts and potential solutions.

1.3.1 Benefits to California

The goal of this project was to develop specific models to improve the accuracy of dynamic simulations. There was a specific emphasis on the delayed voltage recovery problem which has a direct benefit to California:

- California utilities are known to be susceptible to fault-induced delayed voltage recovery. This research improved the fundamental understanding of the phenomenon

and the results and models are guiding decisions to help mitigate the problem. A specific benefit of such mitigation is to increase the likelihood that such events will be contained and not lead to widespread outage.

Additional what papers were directed towards related dynamic load modeling issues. Better dynamic load models offer several benefits to California:

- Improved models aid the decision process for the investment in system solutions to the delayed voltage recovery problem, and other dynamic issues.
- The use of improved model in system studies will increase confidence in the specification of path rating and the deployment of remedial action schemes. This increases confidence in operations.

CHAPTER 2:
Air Conditioner Modeling

2.1 Introduction

This chapter summarizes the air conditioner testing procedures and results from studies conducted by Southern California Edison for this project. Similar tests and consistent results were obtained by independent studies conducted by Bonneville Power Administration. These tests and results were presented at various WECC Load Modeling Task Force Meetings and they form the basis for the modeling efforts.

The results of the air conditioner tests help quantify the observed delayed voltage recovery behavior:

- Air conditioners stall during normally cleared fault scenarios.
- Contactors operate between 35 percent and percent55 nominal voltage. Stalled air conditioners are electrically connected to the system during post-fault delayed voltage events until they trip on thermal protection.
- Thermal protection trips air conditioner units after some voltage-dependent time. After the removal of stalled air conditioners from the system, the voltage recovers, and typically exceeds the pre-fault voltage. The delay is due to the delay in thermal protection operations.

The details of the test procedures and the results are presented in Appendices A and B. The summary of results from Appendix B is presented here.

These test results characterize much of the behavior of air conditioner loads during conditions under which the delayed voltage recovery phenomenon his likely to occur. These devices need to be correctly modeled to capture their impact on dynamic stability characteristics. Researchers on this project undertook two different approaches to modeling the tested behaviors. A top-down approach characterized the raw data from tests via a static model whose mathematical form was chosen to match the data. A bottom approach imposed a physically based-model and fit parameters to match the data.

The details of the model development are contained in Appendices C and D, from which the summaries in this chapter are extracted.

2.2 Task Approach

2.2.1 Laboratory Testing

SCE began air conditioner testing in 2005 to determine how the units would respond when exposed to various under-voltage transient conditions. The test results help SCE to properly model the electrical system and determine possible solutions. SCE tested ten (10) air conditioner units, in its Pomona Electric Vehicle Technical Center (EVTC), typically found in the

service territory. The diversity of the tested air conditioner units included sizes (tonnage), compressor technology (reciprocating and scroll), refrigerant technology (R22 and R-410A), vintage (new and old), and efficiencies (10 thru 13 SEER).

The ten (10) air conditioner units were tested under different undervoltage transients including the Long Notch, Delayed Recovery and Circuit Breaker Clearing type of transient. The Long Notch transient (drop in voltage that was held for 30 seconds) was used to establish the threshold voltage where the air conditioner compressor stalled. The Delayed Recovery transient (drop in voltage followed by a 30 seconds recovery to nominal voltage) simulates the typical delayed voltage recovery event observed in SCE system. The Circuit Breaker transient (short duration drop in voltage held for 3, 6, 9, and 12 cycles) simulates the typical transient generated by the tripping and reclosing of circuit breakers commonly used in the SCE system.

In addition, SCE performed additional testing on the air conditioners for the WECC Load Modeling Task Force which included frequency oscillations, voltage oscillations, and different arrangements of undervoltage transients.

2.2.2 Performance Model

The performance model sets out to capture the observed behavior air conditioner models as a function for voltage. This generic power/voltage form shown below in Figure 4 is motivated from test results summarized in the previous chapter. There are three operating characteristics, running stalled, and tripped. The mathematical models relating voltage to real and reactive power in running and stalling regions are given below. In the tripped region the motor is removed from service, and the amount of load removed is determined using thermal protection characteristics.

Running:

$$P_{run} = a_1 + \frac{a_2}{V - a_0} + a_3(V - a_0) + a_4(V - a_0)^4$$

$$Q_{run} = b_1 + \frac{b_2}{V - b_0} + b_3(V - b_0) + b_4(V - b_0)^4$$

Stalling:

$$P_{stall} = K_{P1}V^3 + K_{P2}V^2$$

$$Q_{stall} = K_{q1}V^3 + K_{q2}V^2$$

Temperature dependence for each parameters a and b in the above equations of P_{run}, Q_{run}, P_{stall} and Q_{stall}:

$$a(T) = c_2T^2 + c_1T + c_0$$
$$b(T) = d_2T^2 + d_1T + d_0$$

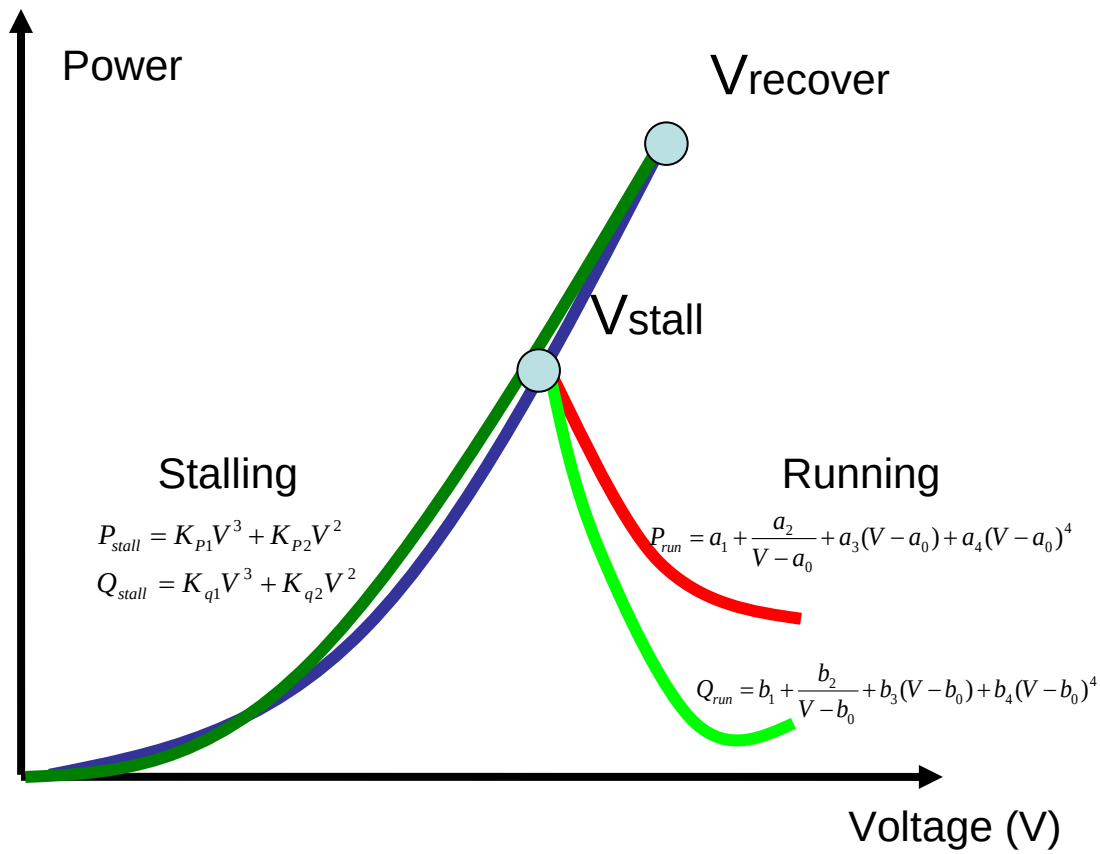

Figure 4 Power/Voltage Curves

2.2.3 Dynamic Phasor Model

The objective is to develop a model that represents the impact of residential air-conditioners on power system dynamic performance. The principal interest is in modeling the air-conditioner impact on dynamic voltage stability and oscillation damping. The model is expected to:

- Accurately capture the sensitivities of motor real and reactive power requirements as a function of its voltage and frequency
- Represent the motor impact on damping of low frequency inter-area oscillations
- Reasonably predict the stalling phenomenon, as well as accurately represent motor current, real and reactive power during the stalled state

The equations below represent a single-phase induction motor driving a compressor load. This model is derived from first principles and verified using data from laboratory tests conducted

by Bonneville Power Administration. The details of the model derivation are presented in Appendix D. The mathematical representation for the model is

$$\left|V_s\right| = \left(r_{ds} + j\frac{\omega_s}{\omega_b}X'_{ds}\right)\left(I^R_{ds} + jI^I_{ds}\right) + j\left(\frac{\omega_s}{\omega_b}\right)\frac{X_m}{X_r}\left(\Psi^R_{dr} + j\Psi^I_{dr}\right)$$

$$\left|V_s\right| = \left(r_{qs} + j\frac{\omega_s}{\omega_b}X'_{qs} + j\frac{\omega_b}{\omega_s}X_c\right)\left(I^R_{qs} + jI^I_{qs}\right) + j\left(\frac{\omega_s}{\omega_b}\right)\frac{nX_m}{X_r}\left(\Psi^R_{qr} + j\Psi^I_r\right)$$

$$\begin{bmatrix}\left(\Psi^R_f + j\Psi^I_f\right)\\ \left(\Psi^R_b + j\Psi^I_b\right)\end{bmatrix} = \left(\frac{1}{2}\right)\begin{bmatrix}1 & -j\\ 1 & j\end{bmatrix}\begin{bmatrix}\left(\Psi^R_{dr} + j\Psi^I_{dr}\right)\\ \left(\Psi^R_{qr} + j\Psi^I_{qr}\right)\end{bmatrix} \quad \begin{bmatrix}\left(\Psi^R_{dr} + j\Psi^I_{dr}\right)\\ \left(\Psi^R_{qr} + j\Psi^I_{qr}\right)\end{bmatrix} = \begin{bmatrix}1 & 1\\ j & -j\end{bmatrix}\begin{bmatrix}\left(\Psi^R_f + j\Psi^I_f\right)\\ \left(\Psi^R_b + j\Psi^I_b\right)\end{bmatrix}$$

$$\begin{bmatrix}\left(I^R_f + jI^I_f\right)\\ \left(I^R_b + jI^I_b\right)\end{bmatrix} = \left(\frac{1}{2}\right)\begin{bmatrix}1 & -jn\\ 1 & jn\end{bmatrix}\begin{bmatrix}\left(I^R_{ds} + jI^I_{ds}\right)\\ \left(I^R_{qs} + jI^I_{qs}\right)\end{bmatrix} \quad \begin{bmatrix}\left(I^R_{ds} + jI^I_{ds}\right)\\ \left(I^R_{qs} + jI^I_{qs}\right)\end{bmatrix} = \begin{bmatrix}1 & 1\\ j/n & -j/n\end{bmatrix}\begin{bmatrix}\left(I^R_f + jI^I_f\right)\\ \left(I^R_b + jI^I_b\right)\end{bmatrix}$$

$$T'_o\frac{d}{dt}\left(\Psi^R_f + j\Psi^I_f\right) = X_m\left(I^R_f + jI^I_f\right) - \left(sat(\Psi_f, \Psi_b) + j\left(\omega_s - \omega_r\right)T'_o\right)\left(\Psi^R_f + j\Psi^I_f\right)$$

$$\left(\Psi^R_b + j\Psi^I_b\right) = \frac{X_m\left(I^R_b + jI^I_b\right)}{\left(sat(\Psi_f, \Psi_b) + j\left(\omega_s + \omega_r\right)T'_o\right)}$$

$$\frac{2H}{\omega_b}\frac{d\omega_r}{dt} = \frac{X_m}{X_r}2\left(I^I_f\Psi^R_f - I^R_f\Psi^I_f - I^I_b\Psi^R_b + I^R_b\Psi^I_b\right) - T_{mech}$$

$$I_s = \left[\left(I^R_{ds} + jI^I_{ds}\right) + \left(I^R_{qs} + jI^I_{qs}\right)\right]e^{j\phi}$$

This is a detailed representation that is similar in structure and derivation to many standard motor models. The variables represent physical quantities include voltage, flux, rotor speed, torque, etc. (See Appendix D for complete description). While it may appear complex to a reader unfamiliar with such equipment, it should be understandable to experts. By comparison, it is certainly more complex than the performance model presented in the previously. It however offers to capture dynamic phenomenon not represented by the performance model. The value of this dynamic information is still under investigation.

2.3 Task Results

2.3.1 Test Results

This summary section contains the testing results for the air conditioning units when exposed to the *delayed recovery* type of transients, similar to that observed during the delayed voltage recovery events at SCE.

Stall Voltage

The ten tested air conditioning units had similar stalling voltages within ±5 percent (voltage level where compressor ceased to turn) at each of the tested temperatures. These voltages varied with the outdoor air temperature that the compressor and condensing coils were

subjected to. The stall response time (time it takes the air conditioner compressor to stop turning) on the tested air conditioners was approximately 6 cycles after the under-voltage condition occurred. Test results indicated that the stalling voltage average at 80 °F is 61 percent, at 100 °F is 65 percent, and at 115 °F is 69 percent. Table 1indicates the stalling windows (voltages between the stall threshold voltage and the contactor dropout voltage) for the ten tested air conditioner units when exposed to the *delayed recovery* type of transients. Air conditioner unit #10 did not stall at 80 °F and it operated down to the voltage where the contactor opened without stalling. Opening of the contactor did not prevent the air conditioner units from stalling; it just delayed stalling until the contactor reclosed.

Table 1 Stall Window

	Stall Window (80°F)		Stall Window (100°F)		Stall Window (115°F)	
	Stall Threshold	Contactor Dropout	Stall Threshold	Contactor Dropout	Stall Threshold	Contactor Dropout
AC #1	64%	50%	66%	50%	68%	50%
AC #2	56%	50%	61%	50%	66%	50%
AC #3	59%	35%	67%	35%	73%	35%
AC #4	62%	50%	67%	50%	75%	50%
AC #5	57%	50%	62%	50%	67%	45%
AC #6	59%	45%	64%	40%	68%	40%
AC #7	57%	50%	61%	50%	67%	50%
AC #8	64%	45%	67%	55%	69%	50%
AC #9	67%	55%	70%	55%	73%	55%
AC #10	none	45%	64%	50%	68%	55%

The major influence on the three stall parameters, current (I_{STALL}) and real power (P_{STALL}) and reactive power (Q_{STALL}), was the supply voltage. The higher the terminal voltage when the stall occurs, the higher the stall parameter values. The values of these parameters were also proportional to the unit size.

Figure 5 below indicates the typical current (I) behavior of an air conditioner unit when exposed to the *delayed recovery* type of transient. The normal running current (I_{FLA}) is approximately 17, 22, and 27 Amps at nominal voltage (100 percent or 240 V) for the three simulated outdoor temperatures 80, 100, 115 °F respectively. The normal running current was found to be inversely proportional to the supply voltage, the lower the voltage the higher the normal running current. This behavior continues down to where the unit starts stalling (stalling threshold voltage). The current jumped from as low as 17 Amps (at nominal voltage and 80 °F) to 100 Amps (at 70 percent applied voltage) when the unit stalled. The stall current (I_{STALL}) was found to be directly proportional to the applied voltage; the higher the voltage applied to the

compressor terminals during the stall the higher the stall current (blue, green, and red plot lines). This behavior continues down to where the contactor drops out (contactor drop out voltage).

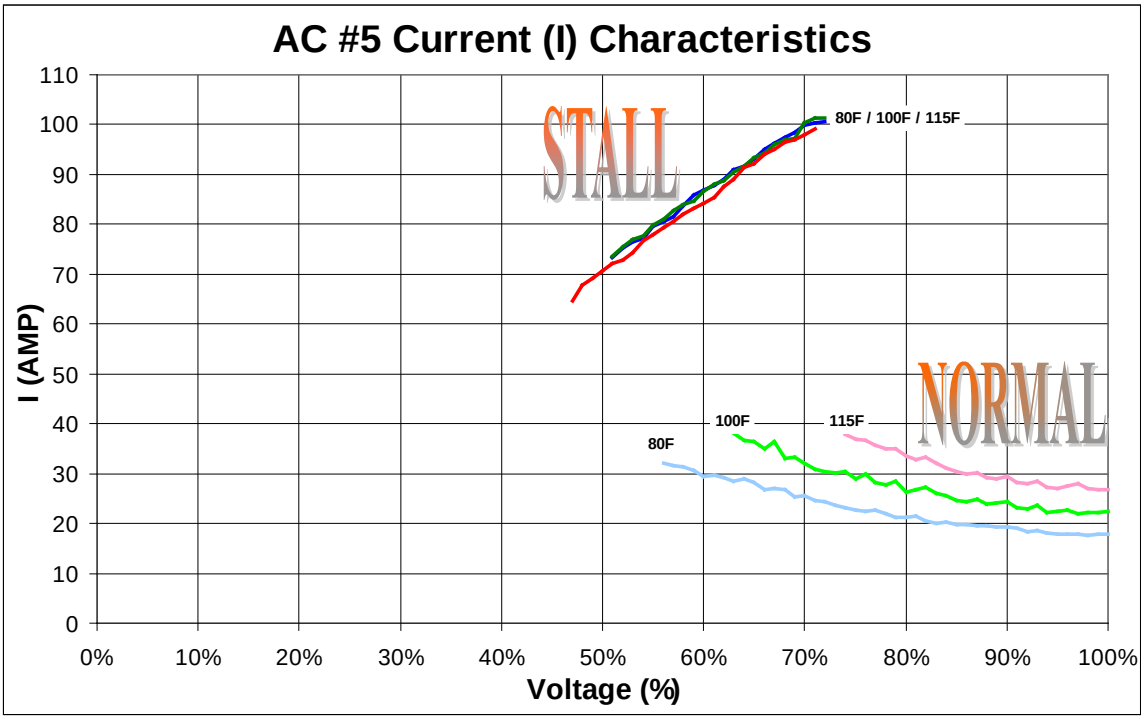

Figure 5 Stall Current

Figure 6 indicates the typical power (real P and reactive Q) behavior of an air conditioner unit when exposed to the *delayed recovery* type of transient. The normal running real power (P) is approximately 4000, 5000, and 6000 Watts and the normal running reactive power (Q) is approximately 900, 1100, and 1300 VARs at nominal voltage (100 percent or 240 V) for the three simulated outdoor temperatures 80, 100, 115 °F respectively. The normal real power (NORMAL WATTS plot line) did not change significantly when the applied voltage decreased all the way down until the unit stall point. The normal reactive power (NORMAL VARS plot line) was found to be inversely proportional to the applied voltage down to approximately 85 percent then started being proportional to the applied voltage until the unit stalled (stall threshold voltage). The real power jumped from 4000 Watts (at nominal voltage and 80 °F) to as high as 12,000 Watts (at 70 percent applied voltage) when the unit stalled. The reactive power jumped from 900 VARs (at nominal voltage and 80 °F) to as high as 12,000 VARs (at 70 percent applied voltage) when the unit stalled. When stalled, both the real and reactive powers were found to be directly proportional to the applied voltage, the higher the voltage the higher the Watts and VARs. This behavior continues down to where the contactor drops out (contactor drop out voltage).

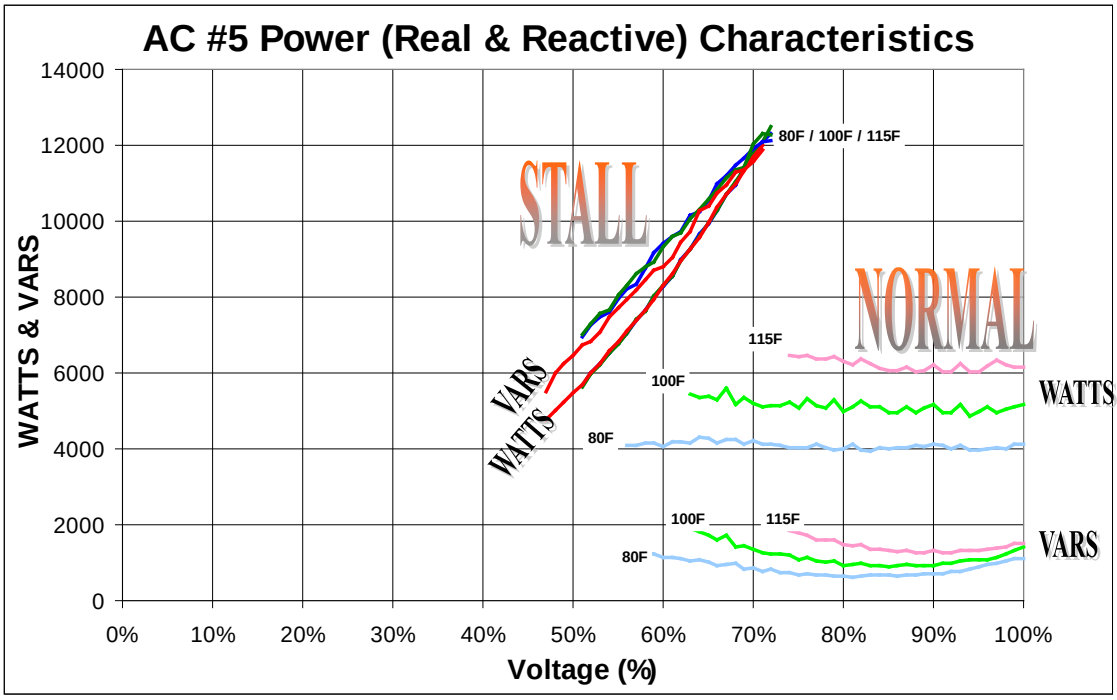

Figure 6 Stall Real and Reactive Power

Metering Devices

Air conditioner systems usually use either thermostatic expansion valves (TXV) or orifice metering devices to control the proper flow of refrigerant in the high-pressure side of the cooling coil (indoor coil). Controlling the proper flow of refrigerant in the high-pressure side is critical because too much flow can cause the cooling coil to freeze and therefore not produce any cooling. The orifice-metering device has a unique advantage that is brings the pressure quickly into equalization after the compressor shuts down. The TXV helps the cooling coil maintain proper flow using a sophisticated feedback system but pressure equalization is achieved at a much slower rate (1 to 2 minutes) than the orifice. The TXV helps the cooling coil have the proper flow when the system is undercharged, maintaining its efficiency. It offers no improvement when the system is overcharged. Since TXVs are commonly used in new air conditioner installations, most of the air conditioner units tested had TXV valves.

When stalled, the compressor ceases to turn and therefore does not generate pressure. The high-pressure (liquid line) and low-pressure (vapor line) need to equalize in order for the compressors to restart smoothly. Most air conditioners rely on thermostats (which commonly have a 5 minutes delay) to avoid short cycling which allows pressure equalization before a restart is attempted.

Most of the tested air conditioner units with scroll compressors went into IDLE (drawing the same running amps without producing any cooling) or NO-LOAD (drawing about ½ the running amps without producing any cooling) condition after a *circuit breaker clearing* generated type of transient. It seems that some mechanical device prevented them from restarting

normally. Researchers opened a scroll compressor and found a pressure relief valve between the high pressure and low-pressure chambers (see Figure 7). This valve is designed to prevent too much pressure from building up in the high-pressure side, releasing it into the low-pressure chamber. This valve may have stuck open when the compressor went into either IDLE or NO-LOAD condition because the unit draws current but no pressure is built up, and no cooling is produced. The air conditioner unit had to be turned off and then back on again to resume normal running condition.

Figure 7 Pressure Relief Valve

Some air conditioner units have high-pressure and low-pressure switches that are in series with the thermostat circuit to protect the compressor from harmful high-pressure conditions. One of the units (air conditioner unit #5) shut itself down under normal running conditions (at nominal voltage) due to high pressure when the outdoor temperature reached 120°F. This indicated that this particular air conditioner unit, under normal charging conditions, would not work properly at in areas where the temperature reaches 120°F.

Thermal Protection Switch

All of the tested air conditioning units' compressors have a thermal protection switch that opens to protect the motor from overheating due to extended stall currents. Without the thermal protection switch, the motor might overheat and fail when high currents are present for long periods. When exposed to the *delayed recovery* type of transients, most of the tested air conditioner compressors (except A/C #7) stalled for as short as 1.0 second and as long as 20 seconds before the thermal protection switch opened to protect the compressor (as seen in Figure 8). Air conditioner unit #7 stalled for as long as 11.6 seconds without opening the thermal protection switch during the 30 second transient. In this unit, when the voltage rose

above 162 V, the compressor resumed normal running condition. Air conditioner unit #9's (used unit) thermal protection switch opened only at the higher test temperatures (100 °F and 115 °F) and only after the compressor stalled for more than 12 seconds. Air conditioner unit #10's thermal protection switch opened only at the highest test temperature (115 °F). All the units restarted normally after the thermal protection switch reclosed except for air conditioner units #6 and #8. These two units needed to be turned off and then on again in order to run normally.

Figure 8 shows the thermal protection switch average tripping time versus the stall voltage for each of the tested air conditioner units except for #7 and #9. Each air conditioner unit had similar linear thermal protection switch tripping time slopes at the three tested temperatures except for unit # 9, which behaved differently for each of the three tested temperatures. The thermal protection tripping time was found to be inversely proportional to the sag voltage, the lower the voltage the longer the thermal protection switch tripping time. The thermal protection tripping time can be as short as 1.0 second and as long as 20 seconds as shown in the figure below. The right end of each plot is where the unit started stalling (stall threshold) and the left end is where the contactor opens (contactor dropout voltage).

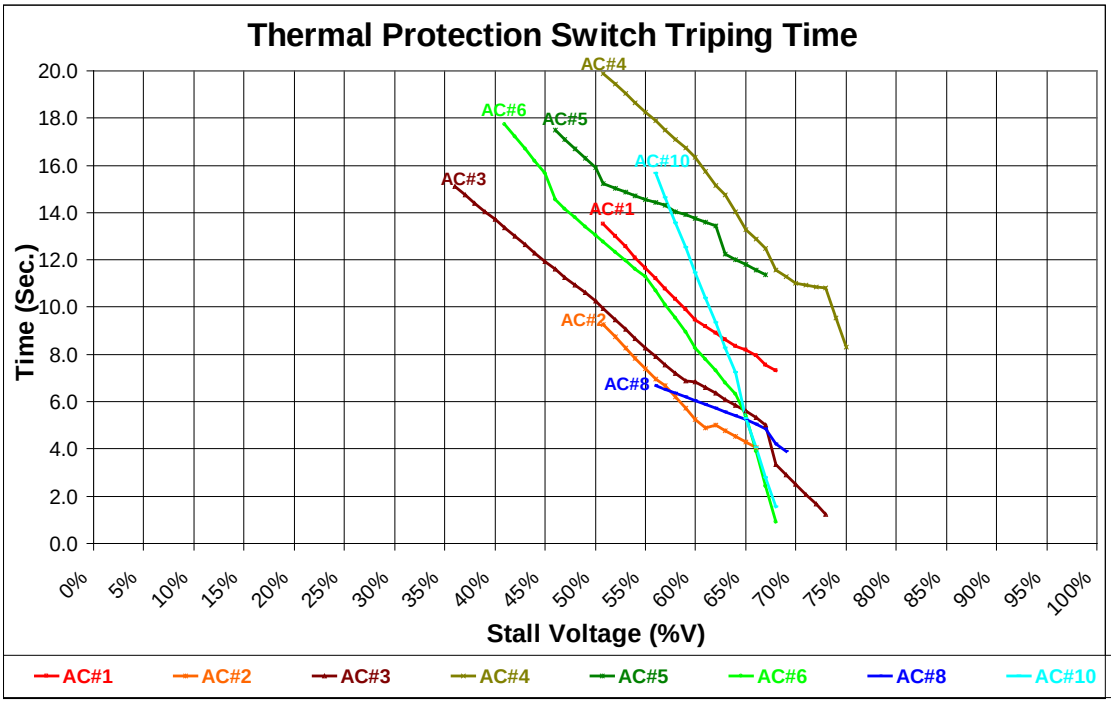

Figure 8 Thermal Protection Switch Tripping Time

Table 2 indicates the stalling window (between the stall threshold voltage and contactor dropout voltage). The thermal protection switch (TPS) tripping time for each of the tested units can be calculated with the t_{TPS} formula shown below in the table.

Table 2 Stall Calculation

$t_{TPS} = (m * V) + \varphi$									
	Stall Window (80°F)		Stall Window (100°F)		Stall Window (115°F)		Slope (m)	Constant (φ)	
	High	Low	High	Low	High	Low			
AC #1	64%	51%	66%	51%	68%	51%	-44.0000	35.8667	
AC #2	56%	51%	61%	51%	66%	51%	-31.2333	24.5817	
AC #3	59%	36%	67%	36%	73%	36%	-31.6667	25.8500	
AC #4	62%	51%	67%	51%	75%	51%	-49.6667	46.1333	
AC #5	57%	51%	62%	51%	67%	46%	-27.3333	30.1500	
AC #6	59%	46%	64%	41%	68%	41%	-47.8718	36.9962	
AC #7	57%	51%	61%	51%	67%	51%	-68.3333	49.0500	
AC #8	64%	46%	67%	56%	69%	51%	-22.7500	20.0442	
AC #9	67%	56%	70%	56%	73%	56%	-67.0000	44.1500	@ 80°F
							-62.3077	46.3846	@ 100°F
							-26.0000	22.9000	@ 115°F
AC #10	none	46%	64%	51%	68%	56%	-105.5208	74.7625	

Contactor Dropout

All the tested air conditioners have a main power contact relay (called the contactor) that has a 24 VAC coil connected in series with the thermostat contact. All of the contactors were found to have a quick response time (2 cycles to open/close when voltage is applied). These units use standard contactors (off the shelf type) which were not specifically designed for air conditioner use. From the tests, the contactor dropout voltage varied from about 55 percent down to 35 percent as seen in the Figure 9. This means that when the supply voltage goes below these values (below brown line on the figure below) the contactor will open tripping off the compressor. While the contactor is open, the compressor is off, but as soon as it recloses, the air conditioner compressor stalls when exposed to the *delayed recovery* type of transient.

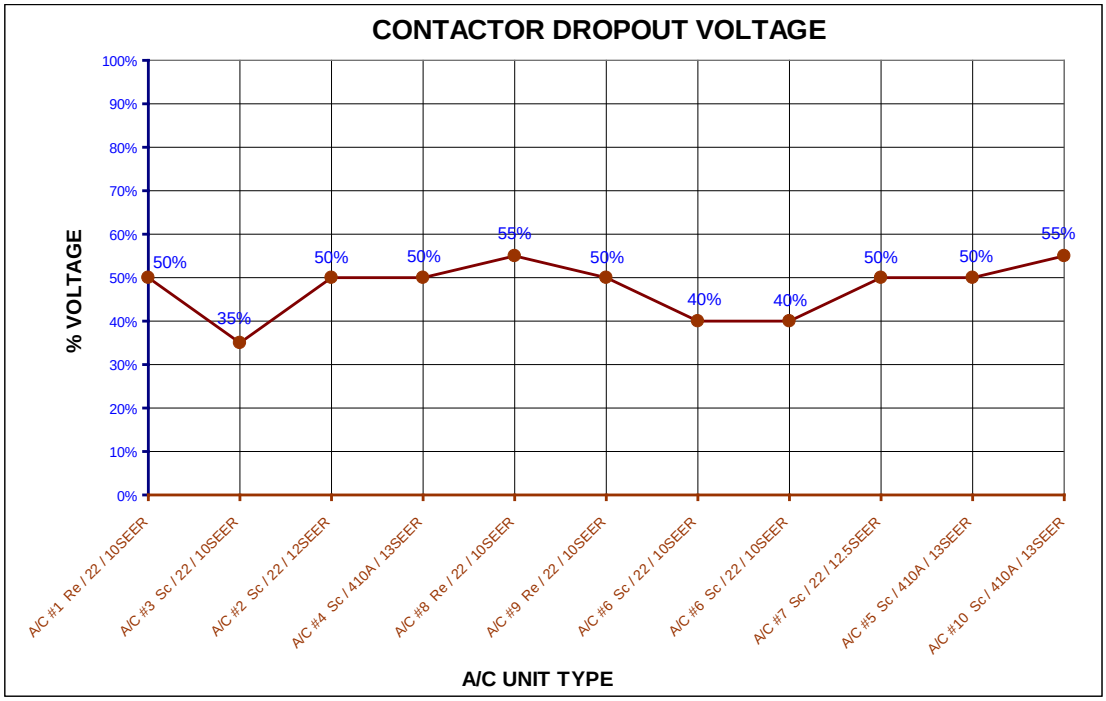

Figure 9 Contactor Dropout Voltage

Opening the contactor did not prevent the air conditioner units from stalling; it just delayed it until the supply voltage reaches the contactor threshold voltage. Table 1 indicates the maximum stalling times after the contactor recloses for all of the tested air conditioner units. This maximum time is when the voltage at the compressor is just above the contactor dropout voltage.

Table 3 Stalling Time after Contactor Reclosed

	Contactor Dropout Voltage (%)	Max. Stall Time After Contactor Reclosed (sec.)
A/C #1 Re / 22 / 10SEER	50%	11.5
A/C #3 Sc / 22 / 10SEER	35%	11.8
A/C #2 Sc / 22 / 12SEER	50%	5.5
A/C #4 Sc / 410A / 13SEER	50%	15.9
A/C #8 Re / 22 / 10SEER	55%	5.6
A/C #9 Re / 22 / 10SEER	50%	11.2
A/C #6 Sc / 22 / 10SEER	40%	11.4
A/C #6-OC Sc / 22 / 10SEER	40%	8.1
A/C #7 Sc / 22 / 12.5SEER	50%	6.4
A/C #5 Sc / 410A / 13SEER	50%	8.1
A/C #10 Sc / 410A / 13SEER	55%	6.6

2.3.2 Performance Model

A report on the evaluation of the performance model is given in Appendix C. In that document the performance model is tested under the following fault conditions:

- Voltage ramp down and ramp up
- Voltage sags
- Voltage oscillations
- Voltage humps (over voltages)
- Frequency oscillations
- Frequency sags
- Frequency ramp down and ramp up

The researchers make the following observations about their evaluation of the performance model:

1. The performance model is numerically robust.
2. The model can reasonably simulate voltage recovery caused by stalling. The voltage recovery process is mainly determined by thermal relay parameters.
3. The model simulates the worst case scenario. The key assumption is that once the voltage is below V_{stall}, all the motors at the feeder will stall. Because of the cascaded effect, the assumption is valid for most cases. That is, once the motors at the end of the feeder stall, it will draw huge current and bring the voltage down along the feeder. This will cause the other motors along the feeder to stall.
4. There are two potential numerical problems:
    a. The frequency dependency calculation. The default settings are 1.0 and -3. Unless the frequency calculation is off too much, numerically, the model will function well. However, the model will be more stable if a maximum frequency change allowed is used to cap the maximum P and Q changes.
    b. The discontinuity in the running and stalling curves. The model did not fail to function properly because of this, but it might be an issue for weak systems where instantaneous real and reactive power increases are limited by their regulating capabilities.

2.3.3 Dynamic Phasor Model

The figures in this section present representative comparative plots of measured test data and simulations using this phasor model. These comparisons include

- Voltage ramp test
- Voltage oscillation test

- Frequency step test
- Voltage sag tests

Voltage Ramp Test

The applied voltage ramp down and ramp up is shown below in Figure 10.

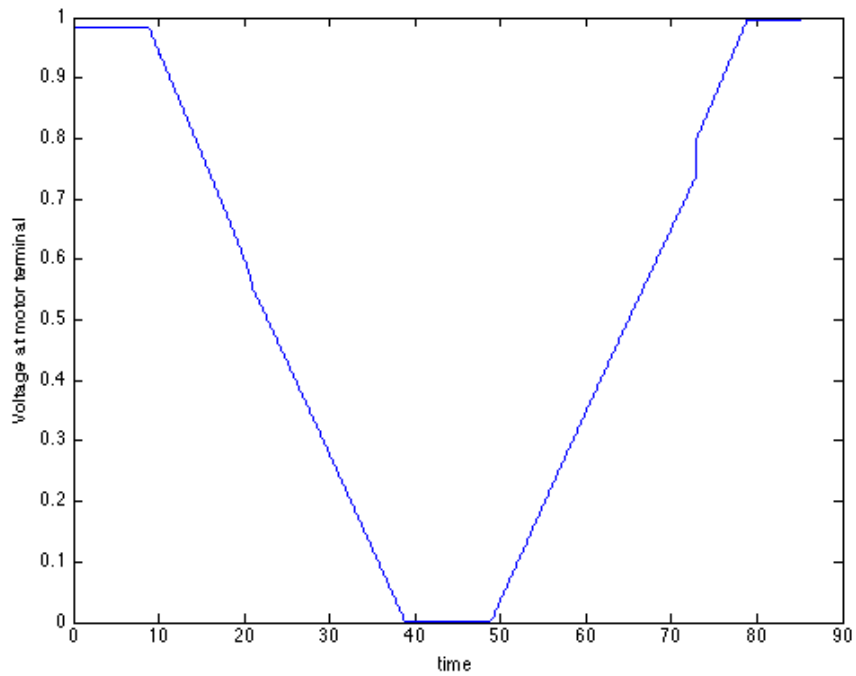

Figure 10 Voltage ramp measured at terminal of motor. The voltage initially is 0.98 pu.

The measured and simulated active and reactive powers are shown below in Figure 11 and Figure 12 respectively. There is excellent agreement. The difference near the end of the data and simulation is the action of the thermal protection shown in the data, and not represented in the model here.

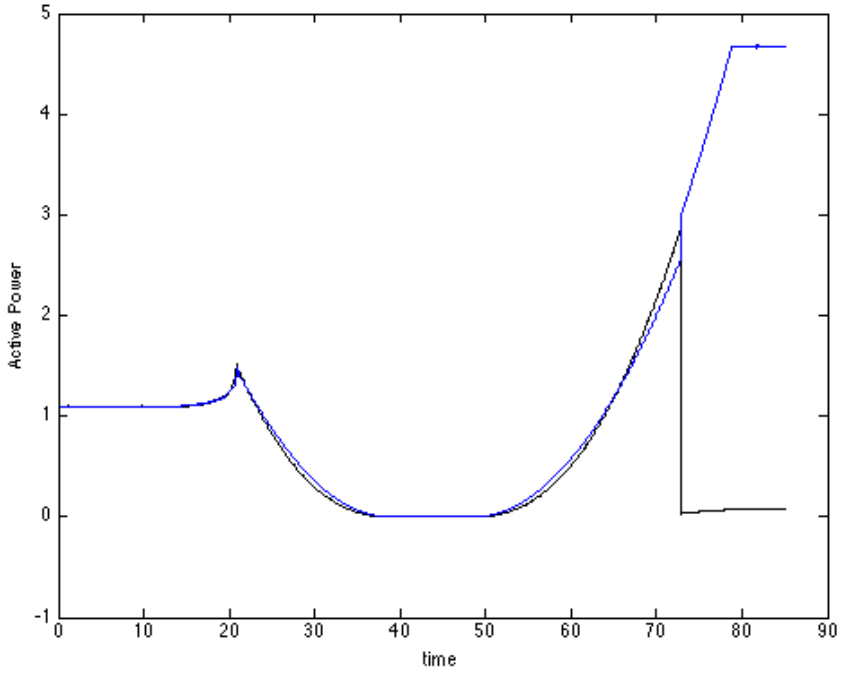

Figure 11 Measured and simulated active power

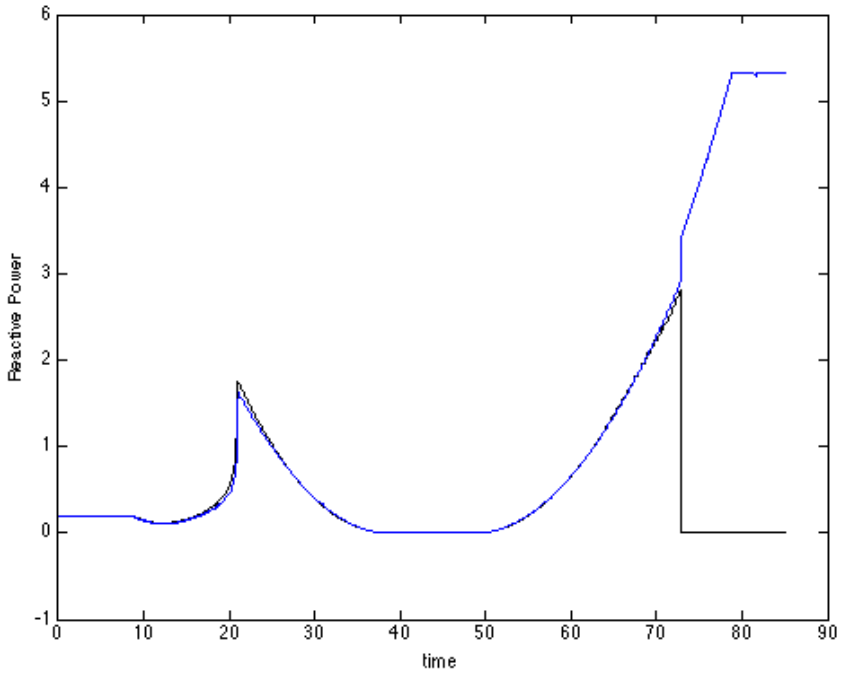

Figure 12 Measured and simulated reactive power

Voltage Oscillation Test

In this test, the magnitude of the applied voltage oscillations between 90 percent and 110 percent of the nominal value. The applied oscillations are at frequencies of 0.1Hz, 0.25Hz, 0.7Hz, 1.5Hz, and 2Hz, and is shown in Figure 13.

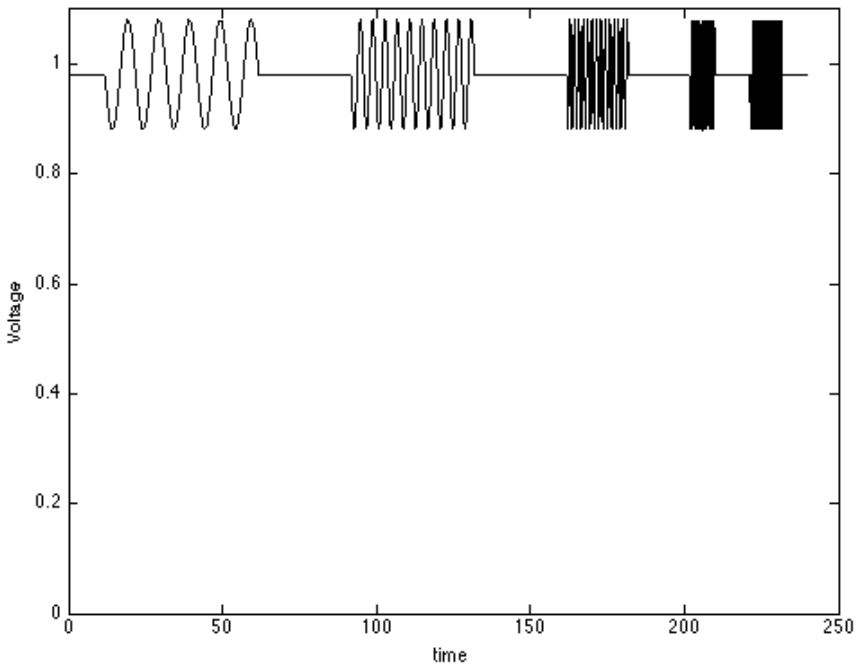

Figure 13 Voltage Oscillation Test. The applied voltage varies between 90% and 110% of nominal at frequencies: 0.1 Hz, 0.25 Hz, 0.7 Hz, 1.5Hz, and 2 Hz.

The resulting active and reactive powers are shown in Figure 14 and Figure 15 below. The match is very good.

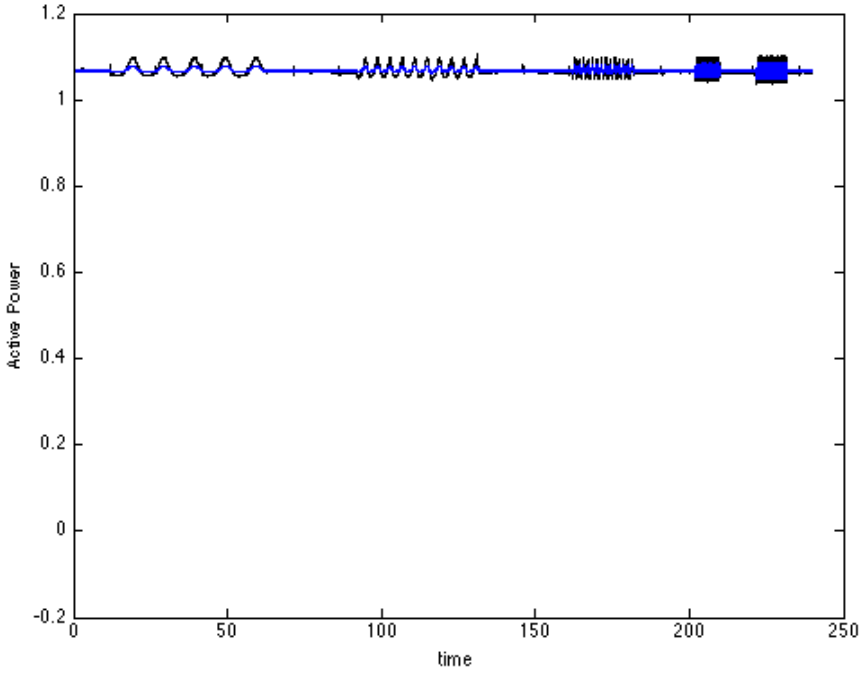

Figure 14 Active Power, simulated and calculated from measurements for the voltage oscillation test.

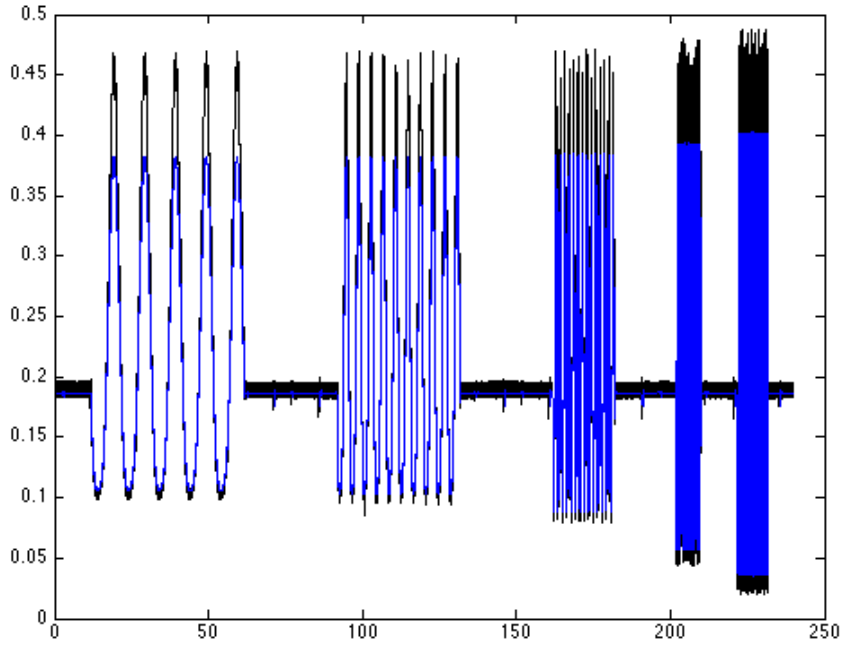

Figure 15 Reactive Power, simulated and calculated from measurements for the voltage oscillation test.

Frequency Tests

In the next test, the supply frequency is decreased from 60Hz to 58.5Hz in 0.25Hz increments, and then increased back again to 60Hz (shown below in Figure 17). Care must be taken to accurately calculate the active and reactive powers of the fundamental frequency components as the frequency changes. Calculating values assuming 60Hz - modulating by 60Hz sinusoids and averaging over integer periods - results in oscillations and *bias*. In this calculation it is convenient to modulate by signals of the correct frequencies, but averaged using a fixed window length. This results in oscillations, but removes the bias. Then a 1sec average is applied to smooth out the oscillations. Also, the applied voltage as seen from the terminal of the single phase motor changes with frequency. The voltage drop from the laboratory supply to motor depends on frequency as seen in Figure **16**.

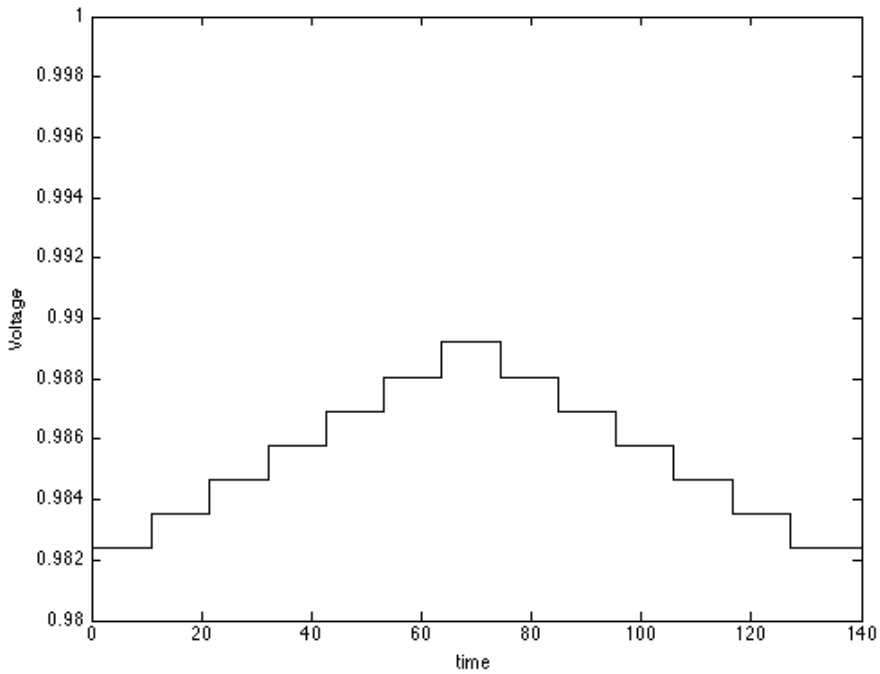

Figure 16 Simulation voltage consistent with laboratory voltage. The voltage magnitude increases as frequency decreases because the supply line voltage drop decreases.

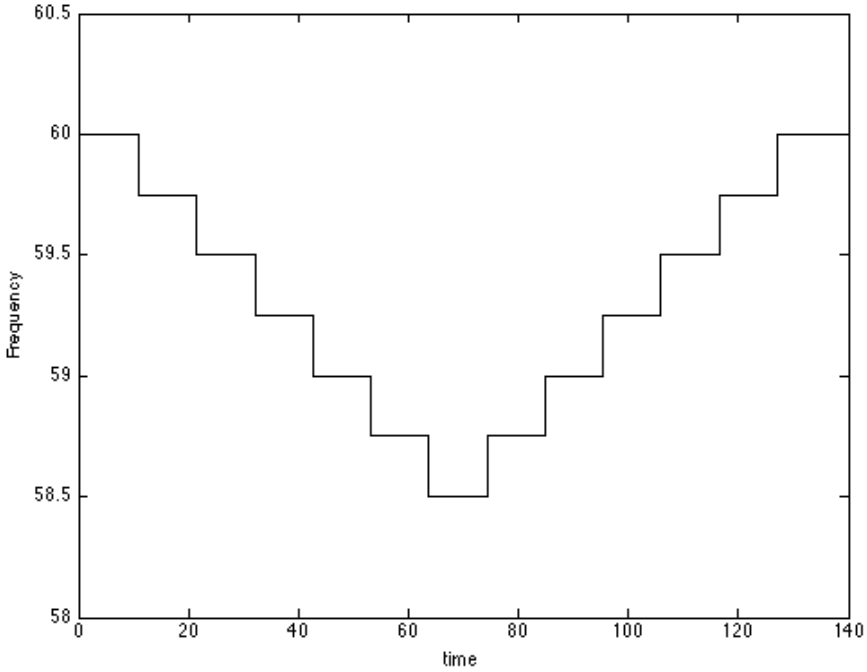

Figure 17 Frequency. The frequency drops from 60Hz to 58.5Hz and returns to 60Hz in 0.25Hz increments.

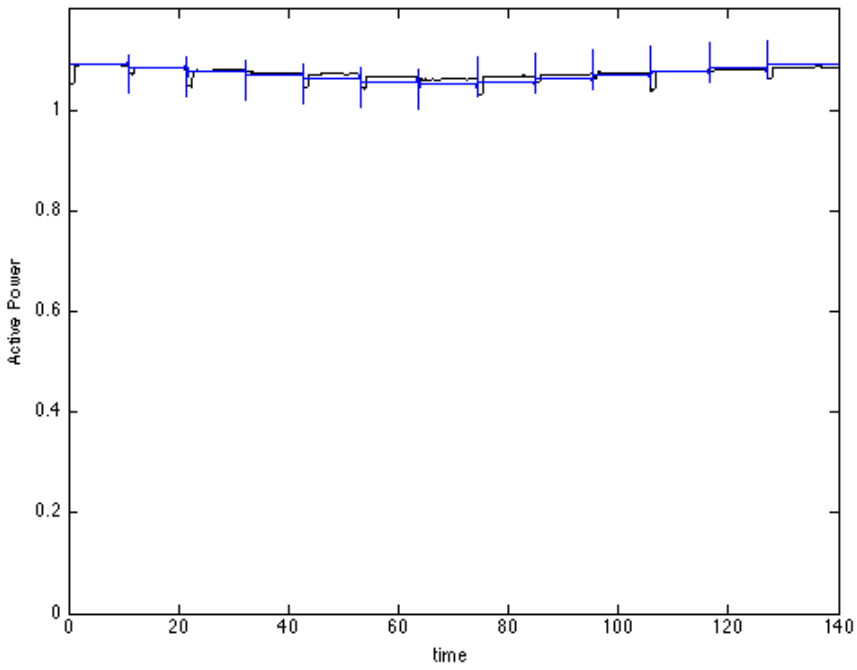

Figure 18. Calculated and simulated active power. The response is small and proportional to frequency.

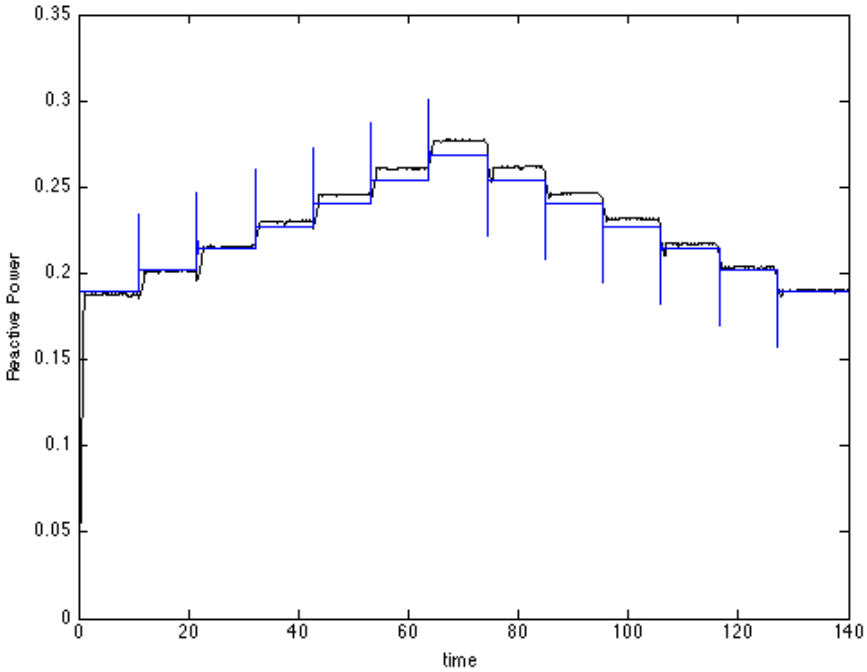

Figure 19 Calculated and simulated reactive powers. The reactive power increases with decrease in frequency.

The simulated responses shown in Figure 18 and Figure 19 are close to the measured responses. The applied frequency variation down to 58.5 Hz is large. The model should accurately represent the load frequency response for even large events.

Voltage Sag Tests

The voltage sag tests characterize the response of the air conditioner to faults in the network. The voltage profile for these tests has three parts, a prefault voltage at 100 percent nominal, a sag level for some specified fault duration, and a post-fault recovery level. The output of a particular test is simply whether or not the motor stalled. The simulation model is used to attempt to repeat the results, and in this case the model's Inertia constant, *H*, is tuned to best match the data.

An important point about the voltage levels in the test: there is a small voltage drop from the laboratory supply source to the terminal of the motor. While the difference is usually small, it is important to account for these few percent when trying to match the results with simulations. The particular tests examined here are those that distinguish between motor recovery and motor stall. The terminal voltage is noted when discussing these tests.

Six-cycle fault tests

The sag voltage was decreases to 0 pu and raised to various recovery voltages including 100 percent. The motor remained stalled in all cases.

Three-cycle fault, 100 percent recover tests

In these tests the recovery voltage was returned to 100 percent after a 3-cycle voltage sag. Repeated tests determined that the motor remained stalled for a voltage sag of 0.52 per unit, but recovered for a voltage sag of 0.54 pu.

The simulation must account for the voltage drop in the supply line. The terminal voltage at 100 percent supply is 0.98 pu. The voltage sags of 0.52 and 0.54, correspond to terminal voltages of 0.49 pu and 0.51 pu, respectively. For the case when the motor stalled, the high current kept the terminal voltage around 0.90 pu. In the recovery case, the terminal voltage recovered initially to around 0.90 pu and increased to 0.98 as the motor quickly returned to speed. In the simulation a pre-fault voltage of 0.98 pu, sag voltages of 0.49 pu and 0.51 pu, and a recovery voltage of 0.90 pu were used.

Keeping all other parameters constant, and modeling the mechanical load as constant torque, the inertia constant is found to be $H = 0.0219$ sec. The following four plots compare the active and reactive powers computed from measurements and simulated using the model described here. The model distinguishes between the stall/non stall conditions, and follows the dynamics reasonably well.

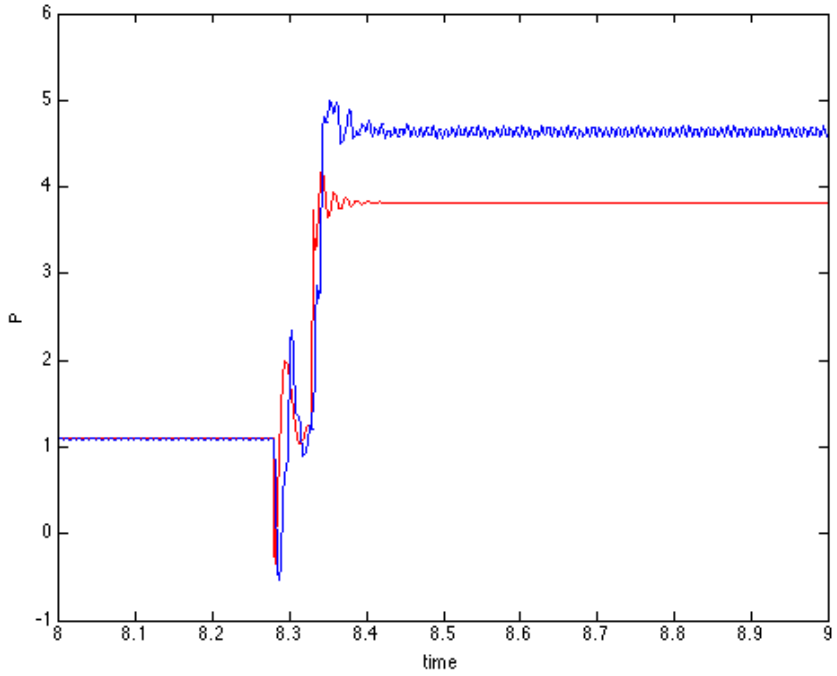

Figure 20 Plot of active power for 3-cycle 52% voltage sag test. The motor stalls.

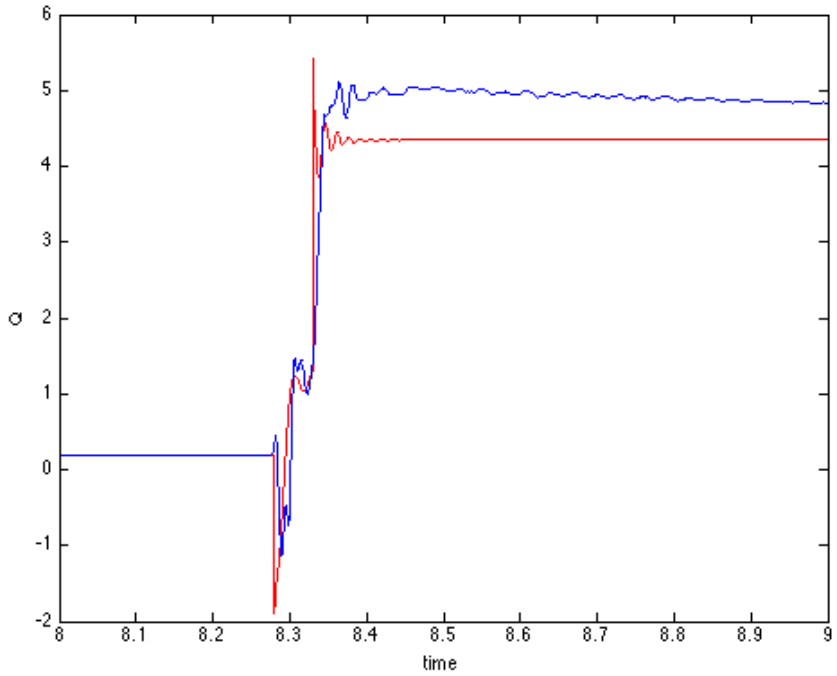

Figure 21 Plot of reactive power for 3-cycle, 52% voltage sag test. The motor stalls.

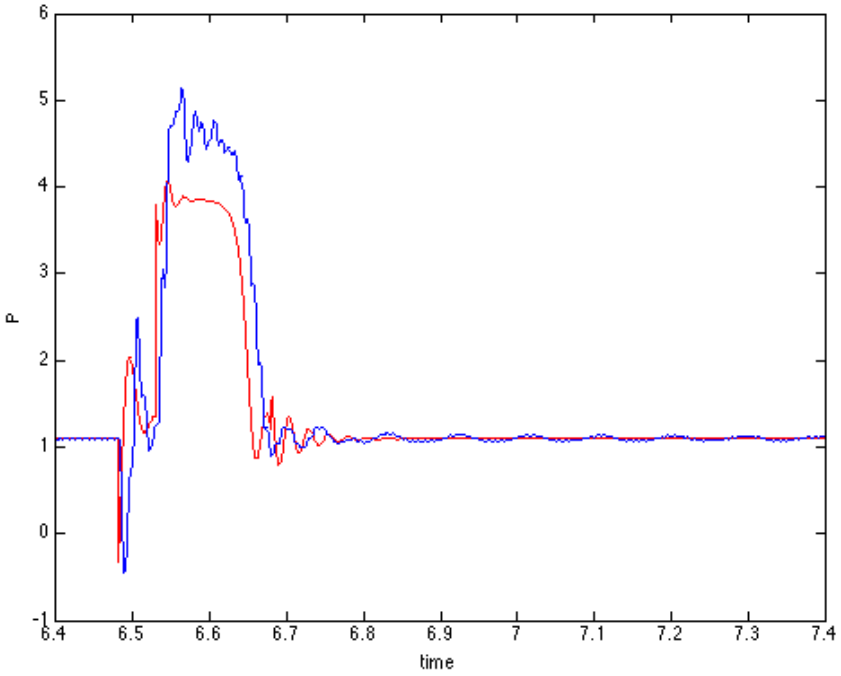

Figure 22 Plot of active power for 3-cycle, 54% voltage sag test. The motor recovers. (Note that the apparent delay in measured response, approximately 1 cycle, is due to calculation of power from data – using a 1-cycle window.)

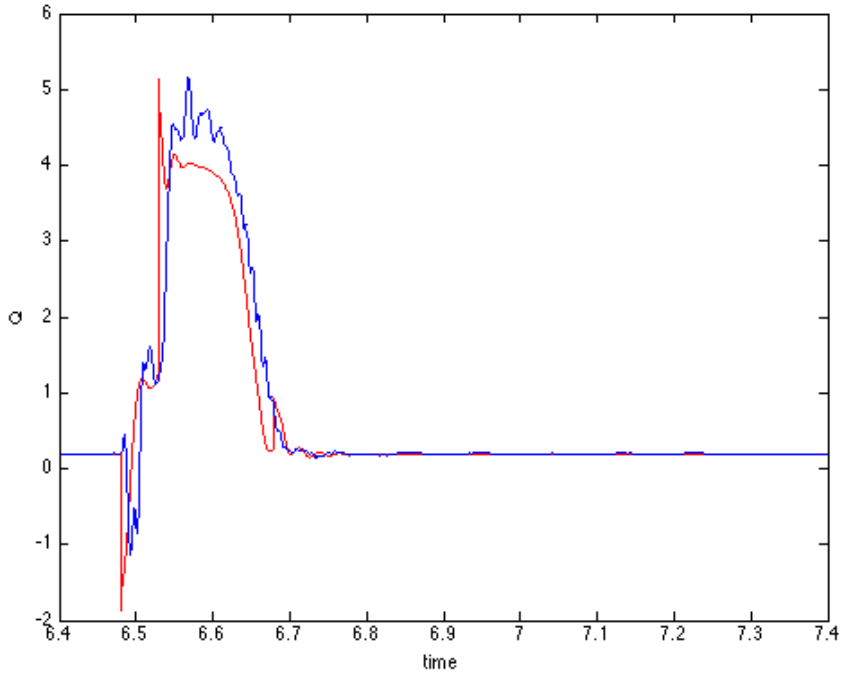

Figure 23 Plot of reactive power for 3-cycle, 54% voltage sag test. The motor recovers. (Note that the apparent delay in measured response, approximately 1 cycle, is due to calculation of power from data – using a 1-cycle window.)

The model presented here is clearly capable of representing the behavior observed in the laboratory tests. The laboratory tests are comprehensive. The voltage ramp tests operating conditions between full and zero voltage – identifying the motor stall voltage along the way. The voltage oscillation tests for the response that may be observed in the system under certain conditions, as does the frequency test. Both, in fact, test for frequencies beyond those typically observed in the system. The voltage sag tests confirm that the model can capture the stall/recover characteristics of these motors.

Continuing work involves the application of the model in system-wide studies. The model is being implemented in the PSLF software to enable these studies.

2.4 Conclusions and Recommendations

2.4.1 Conclusions

Extensive laboratory tests were performed on typical air conditioner units. The results of these tests were consistent with the hypothesis that stalled air conditioners explain the observed delayed voltage recovery phenomenon.

Two approaches to load modeling yielded two models for air conditioner loads. Both match the laboratory test data well. Both are being implemented in the PSLF. The performance model is already implemented and being tested by WECC LMTF members on system-level studies.

2.4.2 Recommendations

The differences, if any, between the two load models will be revealed in comparative system studies. The static characteristics are consistent and any significant difference would only arise due to their treatment of dynamics.

Once WECC determines the most suitable model to use in the WECC composite load model, it will be used in standard simulation runs for the West.

2.4.3 Benefit to California

The extensive test that led to the development of new load models will benefit California and the rest of the WECC region through more accurate dynamic simulations. These simulations are used to establish path transfer ratings and to study the impact of specific events of interest. Improved simulations will increase reliability of the electric grid in California.

CHAPTER 3:
Potential Solutions to Delayed Voltage Recovery

3.1 Introduction

SCE's investigation focused on two approaches for mitigating the air conditioner stalling problem. The first approach was solving the problem at its source, the individual air conditioner units. SCE tested various digital thermostats, under-voltage protection devices, and load control switches to assess their ability to mitigate the air conditioner stalling problem. The second approach attempted to mitigate the problem at the power systems grid. SCE contracted the Electric Power Research Institute (EPRI) to perform simulations to assess the effectiveness of voltage support devices, static VAR compensators (SVC) and synchronous condensers to resolve the air conditioner stalling problem.

The details of unit-level tests at SCE are presented in Appendix E, and a summary report of unit-level and system-level approaches is in Appendix F, and presented here.

3.2 Task Approach

3.2.1 Unit Level

SCE tested selected digital programmable thermostats, under-voltage protection devices, and load control switches to determine their ability to mitigate the air conditioner stalling problem.

Of the three digital programmable thermostats tested for response to under-voltage transients, only one thermostat had under-voltage protection, the Honeywell. This thermostat may help mitigate the air conditioner stalling problem, but its under-voltage protection and response times do not currently meet SCE's proposed stall protection specifications.

The use of digital programmable thermostats with proposed under-voltage protection is one of the easiest retrofitting solutions because it does not require a certified electrician. In California, retrofitting thermostats requires a certified electrician only when branch circuits are rated 100 VA or greater and most residential thermostats circuits are rated below 24 VA. It is important to mention that this solution would not protect older units, those installed prior to the mid-1990s, because they lack the common "C" wire. This wire powers the thermostat electronics used for measuring voltage. The effectiveness of this solution will only become evident as new air conditioner units having the common "C" wire, replace older air conditioners.

Three under-voltage protection devices manufactured by Diversified Electronics (DE) were tested that may have the under-voltage protection to help mitigate the air conditioner stalling problem. These three relays are off-the-shelf devices making them conveniently attainable, but they also come with disadvantages. First, two are plug-in devices, making them suitable only for window air conditioners and possibly some plug-in air handler units. Second, they do not have randomly distributed short cycle-prevention allowing them to restart at different times after voltage are restored to normal conditions. Third, they use normally open (N.O.) contacts that prevent the units from restarting if the under-voltage relay fails. Another disadvantage is

the retrofit cost – installing any of these under-voltage protection relays in California would require a qualified electrician for retrofit.

All other tested under-voltage protection devices provided limited stall protection; while helping to some degree, they will not alleviate the air conditioner stalling problem.

SCE worked with other entities such as Corporate System Engineering (CSE), Pacific Northwest National Laboratory (PNNL), and Cannon Technologies to modify their devices to mitigate the air conditioner stalling problem. The first two entities, CSE and PNNL agreed to modify their devices to meet SCE's proposed under-voltage protection scheme; both devices were prototypes. Cannon's off-the-shelf device (load control switch) required software modifications to meet SCE's proposed under-voltage protection scheme. Because the state of California requires a certified electrician when servicing circuits rated 100 VA or more, implementation of all three of these devices will require an additional labor cost of $70 to $100 per installation, making it a less attractive solution.

3.2.2 System Level

EPRI was contracted by SCE to develop a more representative load model for use in dynamic studies as well as the study of mitigation field equipment such as Static VAR Compensators (SVC), and synchronous condensers (Pourbeik 2007).[4]

3.3 Task Results

3.3.1 Unit Level

Table 1 provides the test results for each device and assesses how well they mitigate air conditioner stalling. The *Potential* column is an SCE assessment of how viable these devices are for protecting air conditioners from stalling.

[4] As the research tasks were conducted in parallel, the new WECC composite load model with air conditioner representation was not yet available.

Table 4 Unit Level Devices Test Results

	Manuf.	Model	UV Threshold (%V)	Response Time (sec.)	Electronics Shutdown (%V)	Re-close Delay (sec.)	Control Contacts	Potential (%)
Thermostats	Honeywell	RTH7400D100 8	60%	0.760	can't tell	290	N.O.	Medium-High
	Totaline	P374-1800	none	none	can't tell	none	N.O.	none
	Ritetemp	8022C	none	none	can't tell	none	N.O.	none
Under-Voltage Relays	ICM	ICM491	86%	5.100	75%	6	N.O.	Low
	DE	CV-200RS-20 Plug-in	83%	0.300	can't tell	300	N.O.	Medium
	DE	CV-100RS Plug-in	78%	0.232	can't tell	300	N.O.	Medium
	DE	CV-240-AFN Mount-in	83%	0.483	can't tell	300	N.O.	Medium
	Kriwan	INT369	68%	0.294	can't tell	120	N.O.	Medium-Low
	CSE	N/A	78%	0.25	15%	180 ~ 300	N.C.	High
	PNNL	N/A	77%	0.033	40%	180 ~ 300	N.C.	High
LCS	Cannon	N/A	80%	0.264	33%	180 ~ 300	N.C.	High

3.3.2 System Level

EPRI modeling indicated that SVCs and synchronous condensers at the system level could help mitigate the delayed voltage recovery problem as shown in figure 3. Although these devices cannot prevent air conditioners from stalling or subsequent faults, they can help isolate the fault area by literally injecting VARs into the system to prevent the problem from spreading throughout the system. Although a more rudimentary remedy, SVCs and synchronous condensers could help disconnect the stalled air conditioners by raising the units' terminal voltage. The supply VAR raises the terminal voltage subsequently making the thermal protection switch operate much faster. Finally, SVCs and synchronous condensers significantly improve voltage recovery and provide better voltage regulation, particularly in preventing over-voltages by absorbing VARs that decrease voltage.

The main advantage of electrical system-level solutions is that they can be implemented at fewer locations (transmission, subtransmission, or distribution substations) rather than at every air conditioning unit. The disadvantages in utilizing system-level solutions are, they would not be able to stop the voltage drop in the immediate area of the system problem and would be more costly to implement than air conditioner unit-level solutions.

Figure 24 provides the modeling results. The black plotline simulates an event without using mitigation devices. The red and blue plots simulate the use of SVC and Synchronous Condensers respectively. This shows that each of these two devices help regulate voltage

immediately after the fault is cleared by injecting VARs into the system. They also help remedy the over-voltage problem by absorbing VARs.

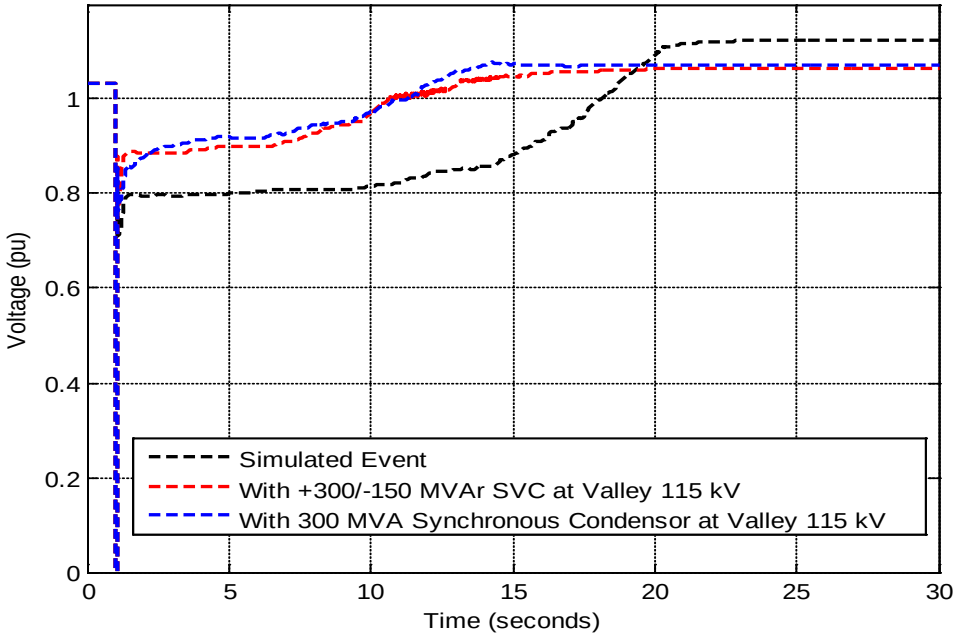

Figure 24 System-Level Solutions Simulations

3.3.3 Economic Assessment

The SCE Valley substation was used as a model for economic assessment because it typifies substations affected by delayed voltage recovery events. The SVCs installed at Devers and Rector Substations were used for cost analysis purposes. The Devers substation SVC has ratings of 605 MVAR reactive (generating) and 110 MVAR inductive (absorbing) and costs approximately $50 million. The Rector substation SVC has ratings of 200 MVAR reactive (generating) and 100 MVAR inductive (absorbing) and costs approximately $35 million. In order for SVCs or synchronous condensers to mitigate air conditioner stalling, they need to be installed at approximately 20 Valley 115-kV substations. The total cost for implementing this solution could reach $100 million as indicated in Table 5.

Mitigating air conditioner stalling is more cost-effective if done at the unit-level. Valley has approximately 300,000 residential and 30,000 industrial, commercial, and agricultural customers with a total peak load of 1,500 MW and 400 MVAR. Assuming each customer has one air conditioner unit, 330,000 under-voltage protection devices would be needed to mitigate the problem. That leaves two feasible unit-level solutions. The first would be to use under-voltage protection that does not require a certified electrician for a total cost of approximately $20 million; the second option uses under-voltage protection devices that require an electrician for installation at a cost of approximately $40 million as indicated in Table 5.

Table 5 Economic Assessment

Unit-Level Solution					
	Customers (Thousands)	Labor & Installation Cost	Material & Installation Cost	Total Material Cost (Millions)	Total Labor & Material Cost (Millions)
Valley	330	$60	60	$19.8	$39.6

System-Level Solution			
	115-kV "B" Substations	SVC Unit Cost ($ Millions)	Total SVC Cost ($ Millions)
Valley	~20	~$5	$100

3.4 Conclusions and Recommendations

3.4.1 Conclusions

The best way to mitigate the air conditioner stalling problem is to implement a hybrid solution that combines both unit-level and system-level solutions. The under-voltage protection device (unit-level solution) would disconnect air conditioner units during under-voltage events. The SVC (system-level solution) would improve voltage recovery and regulation and prevent over-voltages. By combining unit-level and system-level solutions, Valley would require two SVCs instead of 20, one for each main bus.

3.4.2 Recommendations

For truly effective mitigation of the air conditioner stalling problem, SCE strongly recommends that a standard be created to disconnect stalled air conditioners from the electrical grid. This could be through either a switch at the air conditioner compressor or by action of the thermostat (potentially through the programmable communicating thermostat PCT).

3.4.3 Benefit to California

Adopting a combination of unit-level and system-level solutions to mitigate voltage problems will directly benefit customers and increase the reliability of the California electric grid.

CHAPTER 4:
Load Composition Data Tool

4.1 Introduction

A power system model includes three main elements: the sources of power, the transmission of power, and the loads. Load representation has long been the least accurate of these three elements. The stability of the system depends on whether the balance between supply and demand is maintained. When the system is perturbed by an abrupt change in either supply or demand, the opportunities for part of the system to "fall out of step" increase greatly. Dynamic models are used to examine whether such a risk exists under various conditions, and these models require accurate descriptions of the system interconnections, as well as both the generators and the loads.

Work performed in the early 1990s provided initial guidance regarding load modeling (IEEE Task Force 1993; 1995). The Western Electricity Coordinating Council (WECC) adopted an interim dynamic load model of the California-Oregon Intertie (COI) in early 2002 to address critical operational issues with the COI and formed the WECC Load Modeling Task Force (LMTF) to develop a permanent composite load model to be used for planning and operation studies in the long term (Pereira 2002). The composite load model is nearly complete, and provides a much more accurate representation of the response of load to voltage and frequency disturbances by offering a much more accurate description of the load behavior during transmission faults (Kosterev 2008).

The composite load model structure (see Figure 25) has been previously specified that describes the two salient features of the new model: (a) recognition of the electrical distance between the transmission bus and the end-use loads; and (b) the diversity in the composition and dynamic characteristics of end-use loads. The load model includes data for an equivalent model of the distribution feeder, the load components, and the fractions of the load components.

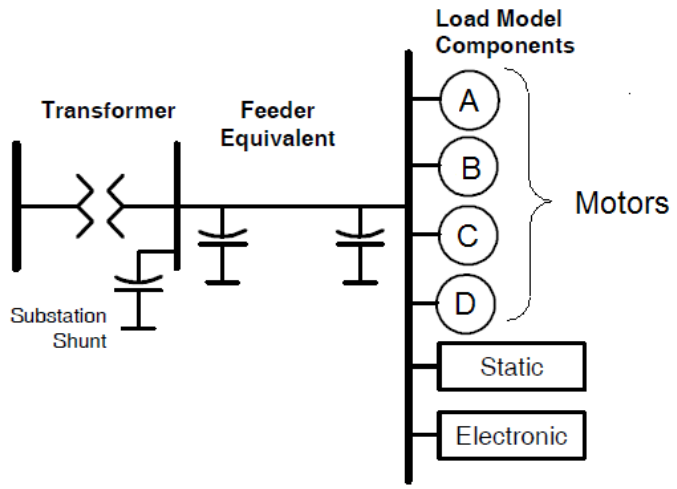

Figure 25. The WECC composite load model structure includes static loads, electronic loads, constant-torque three-phase motors (A), high inertia speed-squared load motors (B), low inertia speed-squared load motors (C), and constant-torque single-phase motors (D).

The methodology adopted by the WECC for identifying the fractions of the load components is specified in Appendix G and summarized in this chapter.

4.2 Task Approach

The approach taken in this development is to meet requirements of three use cases for a load composition data tool. The inputs and outputs for these cases are listed here.

Use Case 1: Feeder Load Composition

Goal

The user seeks to generate a single feeder load model for use with PSLF that incorporates motor A-C, ZIP, and electronic load components based on customer survey data.

Inputs

The user provides the following information

1. City
2. Month
3. Day of week
4. Hour of day
5. Number/type of residential and commercial buildings

Outputs

The total load and the fractions motors A-C, ZIP, and electronic loads.

Use Case 2: Substation Load Composition

Goal

The user seeks to generate a multi-feeder load model for use with PSLF that incorporates motor A-C, ZIP, and electronic load components based on customer survey data.

Inputs

The user provides the following information

1. City
2. Month
3. Day of week
4. Hour of day
5. Number/type of residential and commercial buildings on each feeder

Outputs

The total load and the fractions motors A-C, ZIP, and electronic loads.

Use Case 3: Calibrated Load Composition

Goal

The user seeks to generate a multi-feeder load model for use with PSLF that incorporates motor A-C, ZIP, and electronic load components based on customer meter data.

Inputs

The user provides the following information

1. City
2. Month
3. Day of week
4. Hour of day
5. Number/type of residential and commercial buildings on each feeder
6. Meter scaling results (actual/predicted)

Outputs

The total load and the fractions motors A-C, ZIP, and electronic loads.

The methodology for estimating the fractions of each load component is based on a "bottom-up" approach, coupling information about load types, size, location, time, climate data, and typical building design conditions.

4.3 Task Results

The specifications for the load composition data tool are in Appendix G.

A prototype of the tool can be downloaded from SourceForge (SourceForge.net). The tool provides a numerical reference for validation as well as an illustration of the user input/output requirements. The prototype shall not be considered an authoritative illustration of what the tool must do, rather an example of what it can do. It is expected that developers will improve upon the user interface and data input/output in a substantive way.

Two sample displays from this tool illustrate its function. In Table 6 conditions for a load location are specified. In this case the sample location is Portland, Oregon, and the default conditions are for a summer peak load. The load composition data tool converts this information into parameters needed for the WECC composite load model. This composition is shown in Table 7. The net information needed for the load model is shaded. The compositions for the individual load classes are provided in the table.

Table 6 Prototype Conditions

Conditions Status Check	Ok	Reset			
	Default	Override	Unit	Check	Remarks
Time					
Study type	3			Ok	1=Winter peak, 2=Typical, 3=Summer peak
Month	6			Ok	1=Jan, ... 12=Dec
Day of week	3			Ok	1=Sun, ... 7=Sat, 8=Holiday
Hour of day	15			Ok	0=midnight, ..., 12=noon, ...
Location					
City ST	Portland OR			Ok	Use button to load climate data (see Support col. A)
Latitude	45.5		deg	Ok	Only 25 to 65 N allowed
Climate					
Winter					
Low temperature	20		F	Ok	Determine the heating design conditions
Low month	1			Ok	1=Jan, ... 12=Dec
Low weekday	4			Ok	1=Sun, ... 7=Sat, 8=Holiday
Low hour of day	17			Ok	0=midnight, ..., 12=noon, ...
Summer					
High temperature	92		F	Ok	Determined the cooling design conditions
High month	6			Ok	1=Jan, ... 12=Dec
High weekday	3			Ok	1=Sun, ... 7=Sat, 8=Holiday
High hour of day	15			Ok	0=midnight, ..., 12=noon, ...
Peak solar radiation	301		Btu/sf.h	Ok	Used to establish size of cooling systems
Weather					
Dry Bulb Temperature	92		F	Ok	Determines the load composition conditions
Wind speed	3		mph	Ok	Used to estimate ventilation losses
Relative humidity	87%		%	Ok	Used to estimate latent load
Opaque sky cover	0%		%	Ok	
Diffuse Horizontal Radiation	119		Btu/sf.h	Ok	Used to estimate diffuse window heat gain
Direct normal Radiation	269		Btu/sf.h	Ok	Used to estimate direct solar heat gain

Table 7 Prototype Load Composition

Load composition		Status:	Ok															
Location	Portland OR														Update Loadshapes			
Month	June																	
Weekday	Tuesday														Update Sensitivities			
Time of day	15:00 - 16:00																	
	Customers	Electronic	Motor-A	Motor-B	Motor-C	Motor-D	ZIP Ip	ZIP Iq	ZIP Pp (P)	ZIP Pq (Q)	ZIP Zp (G)	ZIP Zq (B)	ZIP PF	Total power		Check	Sensitivity	Unit
Load	**583**	**1.0**	**1.2**	**0.9**	**0.7**	**2.0**	**1.3**	**-0.5**	**0.0**	**0.0**	**1.0**	**0.1**	**-0.987**	**8.0**		Ok	**Y**	**MW**
Composition	**-**	**12%**	**14%**	**12%**	**8%**	**25%**	**16%**	**-6%**	**0%**	**0%**	**13%**	**1%**	**-**	**100%**			**Y**	**%**
Residential	***520***	***366.0***	***0.0***	***175.9***	***352.6***	***1896.6***	***14.1***	***-2.8***	***0.0***	***0.0***	***889.9***	***0.0***	***-1.0***	***3695.0***	***46%***		***Y***	***kW***
Single family	500	231.4	0.0	105.0	222.9	1143.1	8.9	-1.8	0.0	0.0	562.6	0.0	-1.0	2273.8	28%		Y	kW
Multi family	20	134.6	0.0	70.9	129.7	753.5	5.2	-1.0	0.0	0.0	327.3	0.0	-1.0	1421.2	18%		Y	kW
Commercial	***63***	***632.3***	***1152.0***	***759.8***	***302.5***	***104.5***	***1247.3***	***-461.1***	***0.0***	***0.0***	***119.6***	***87.1***	***-1.0***	***4334.1***	***54%***		***Y***	***kW***
Small office	25	144.0	170.2	106.1	42.6	49.2	251.9	-90.7	0.0	0.0	24.4	18.0	-1.0	791.7	10%		Y	kW
Large office	5	349.1	518.8	357.0	132.4	16.0	391.3	-140.9	0.0	0.0	31.5	26.9	-1.0	1799.7	22%		Y	kW
Retail	15	95.1	280.5	199.0	85.2	6.6	482.4	-173.7	0.0	0.0	34.8	32.2	-1.0	1192.0	15%		Y	kW
Lodging	5	11.8	31.9	36.6	16.7	21.0	36.1	-13.0	0.0	0.0	6.7	2.3	-1.0	161.1	2%		Y	kW
Grocery	5	15.9	85.1	13.8	4.0	9.0	36.6	-13.2	0.0	0.0	6.1	2.4	-1.0	171.0	2%		Y	kW
Restaurant	5	4.7	20.3	14.6	6.7	0.8	14.4	-5.2	0.0	0.0	2.7	0.9	-1.0	64.4	1%		Y	kW
School	2	6.6	28.5	20.5	9.4	1.1	20.2	-7.3	0.0	0.0	3.8	1.3	-1.0	90.2	1%		Y	kW
Health	1	5.2	16.7	12.3	5.4	0.7	14.4	-17.3	0.0	0.0	9.6	3.0	-0.9	65.9	1%		Y	kW
Industrial kW	0	0.0	0.0	0.0	0.0	0.0	0.0	0.0	0.0	0.0	0.0	0.0	1.0	0.0	0%		N	kW
Agricultural kW	0	0.0	0.0	0.0	0.0	0.0	0.0	0.0	0.0	0.0	0.0	0.0	1.0	0.0	0%		N	kW

4.4 Conclusions and Recommendations

4.4.1 Conclusions

A prototype load composition data tools has been developed and the specifications for the tool are provided in Appendix G. It was designed to meet the expected use cases needed to specify parameters for the WECC composite load model.

4.4.2 Recommendations

The load model should be used in conjunction with the WECC composite load model. Base case models should be populated with appropriate default values and loads for critical locations may be entered by engineers for specific studies.

4.4.3 Benefits to California

It is understood that load composition varies by location. Previous models greatly simplified analysis by using uniform models. It is expected that more accurate representation for the diversity of load across the West will increase the accuracy of system simulations and increase confidence in reliable system operation in California. Simulations with these improved models will also provide more confidence in system studies that inform decisions concerning power grid investments.

CHAPTER 5:
Load Monitoring

5.1 Introduction

Load monitoring provides an important means to understand load behavior in the actual system. This understanding helps to develop load models to represent the load behavior in simulation studies. Load monitoring provides measured data needed for load model validation, load composition studies, and load uncertainty analysis.

The purpose of load monitoring is to provide better load characterization and better load management, i.e., the core element of load monitoring is focused on applications. Five load monitoring applications were considered in this work, with some preliminary case studies:

- Load monitoring for top-down load composition: The total load profile obtained from load monitoring data can be decomposed to derive fractions of individual load types if load profiles of individual load types are known.
- Load monitoring for load composition validation: Load profiles generated by the load composition model can be validated against load profiles derived from load monitoring data.
- Load monitoring for load model validation: The general approach of model validation is to compare model simulation against measurements, as was applied to WECC generator model validation. Load monitoring provides the basis for load model validation.
- Load monitoring for uncertainty analysis: Statistical analysis can be performed on load monitoring data to quantify load variations over selected time periods.
- Load monitoring for load control performance evaluation: This is the trend that loads will play a more and more active role in managing the power system. Similar to generator performance monitoring, load monitoring can be used to ensure the load behaves as designed for correct credits and control enforcement.

Devices suitable for load monitoring and the details of the case studies are presented in Appendix H. That work is summarized in this chapter.

5.2 Task Approach

Depending on various needs, load monitoring may be implemented differently with different monitoring hardware, different measured quantities, and different requirements for sampling rates, signal types, record length and availability, with different costs. Potential load monitoring options include traditional supervisory control and data acquisition (SCADA), phasor measurement units (PMUs), portable power system monitors (PPSMs), digital fault recorders (DFRs), protective relays, power quality monitors, and a low-cost monitoring device being developed by Western Electricity Coordinating Council (WECC) Disturbance Monitoring Working Group (DMWG). Characteristics of these options are summarized in this Appendix H.

Current load monitoring practices at several utility companies are presented as examples of load monitoring. Each example consists of the following aspects of load monitoring: objective of load monitoring, monitoring location selection, description of monitoring equipment, communication for load monitoring, cost, and use of the data.

5.3 Task Results

5.3.1 Load Monitoring Device Options

There are different devices available for monitoring loads or for event recording in general. Some are even installed in the system, and data are available for load monitoring purposes with minimal efforts. As mentioned earlier, PMUs are excellent general event recording devices. Digital fault recorders (DFRs) can record dynamic behaviors but record lengths are shorter. General supervisory control and data acquisition (SCADA) measurements are more readily available in the system. They are long records, which are good for load composition studies, but contain less dynamic information. This section will address the features of each monitoring option, (i.e., sampling rate, measured quantities, record length, availability, hardware structure, and cost information, when available). A summary is shown in Table 8.

Table 8 Features of Different Monitoring Options

Monitoring Device Options	Sampling Rate (sps)	Measured Quantities	Measurement Type	Record Length	Availability	Cost to Implement
SCADA	Low, ~1/4	V, I, P, Q	RMS	Long	High	Low
PMU	Medium, ~30	V, I, θ, f	Phasor (GPS-synch)	Long	Low	High
PPSM	High, ~960	V, I	POW (GPS-synch)	Long	Low	Moderate
DFR	High, ~5760	V, I	POW	Medium	Moderate	High
Relay	High, >960	V, I	POW	Short	High	Moderate
Power Quality Monitor	High, >960	V, I	POW	Short	Moderate	Moderate
GFA Controller	Medium, ~30	V, I, f	RMS	Long	Low	Low
DMWG Low-cost Monitor	Medium, ~30 for phasor, High, ~960 for POW	V, I, θ, f	Phasor, POW (GPS-synch)	Long	Low	Low

*Note: sps – samples per second.

RMS – Root mean square.

POW – Point-on-wave.

GPS-synch – Global Positioning System time synchronized.

DMWG – Disturbance Monitoring Working Group.

5.3.2 Existing Load Monitoring Examples

This section summarizes several representative examples in load monitoring.

Building Monitoring at BPA

BPA installed monitoring devices (PPSM) for one of its headquarters building. It is intended for characterizing load consumption for energy efficiency applications, as well as for developing and validating load models at the building level.

The recorded data have been used for analyzing building consumption, which leads to a better understanding of load composition at the building level. Further use of the data is planned for the development of the top-down load composition approach. Load model validation at the building level will be explored as well with the recorded data.

Distribution Substation Monitoring at PNM

Starting in 1997, PNM deployed a load monitoring system consisting of six custom-built data loggers at different distribution stations. The primary purpose of this project was to verify load composition assumptions for the design of PNM's Import Contingency Load Shedding Scheme (ICLSS). Specifically, the primary purpose was to estimate the portion of the demand that corresponds to large industrial motors. Sensitivity studies demonstrated that the performance of ICLSS would depend on the portion of the motor load that would disconnect from the system (via under-voltage relays) following the loss of the two principal 345-kV circuits that supply the Albuquerque area. A secondary, but very important objective was to demonstrate the feasibility of identifying parameters for physically-based load models.

The monitors were setup to collect data continuously, hoping to capture naturally occurring disturbances. Actually many natural events were captured over the years. In addition, PNM also performed several tap tests on these stations during specific times and seasons (e.g., summer peak, winter peak, and off peak). The test data proved to be more useful than naturally occurring disturbances. But the one thing learned from naturally occurring disturbances is that modeling the voltage sensitivity of the load is far more important than the frequency sensitivity.

Load Monitoring at IPC

A load monitor was installed at Idaho Power's Grove station to obtain response data from feeder loads to system disturbances and to gain experience with the monitoring device.

Presently the data is not being collected. Remote access has been lost and no information on the status of the device is available. IPC plans to bring it in for inspection as soon as time becomes available. It is expected that in the near future it would be used for load model validation work.

Load Monitoring at PSE

The objective of load monitoring at PSE is to collect load data for validating dynamic and steady state load modeling in the Puget Sound area. Monitoring devices have been installed at several locations across the Puget Sound region, monitoring primarily 115-kV lines and several 230-kV lines covering a variety of customer classes.

Event recording (phasor data) is used by protection engineers. Disturbance recording (RMS data) will be used for initial and ongoing load modeling and validation purposes.

Feeder Load Monitoring at PG&E

PG&E has begun installing automated meters that are read by power line carriers from a modem installed at the feeder substation. Domestic customer meters will be read hourly; meters for large energy users will be read every 15 minutes. The data collected by AMI will fundamentally alter many engineering programs now in place at PG&E, resulting in improved load flow studies (for planning and for distribution management system (DMS) – PG&E's distribution management system for distribution operations), and for transformer load monitoring.

5.4 Conclusions and Recommendations

5.4.1 Conclusions

The purpose of load monitoring is to serve the needs for better load characterization and better load management. Load monitoring can find applications in many aspects, including:

- Load monitoring for top-down load composition
- Load monitoring for load composition validation
- Load monitoring for load model validation
- Load monitoring for uncertainty analysis
- Load monitoring for load control performance evaluation

Load Monitoring for Top-Down Load Composition

The term "top-down" is used in contrast to the "bottom-up" approach, which describes the previous building-simulation-based load composition model. The top-down load composition serves the purpose of estimating load mix and weighting factors that are needed in the bottom-up load composition model. An example shown in Figure 26, assuming typical load profiles for individual building types are known, the top-down approach solves for the weighting factors from the total feeder load profile obtained from SCADA data.

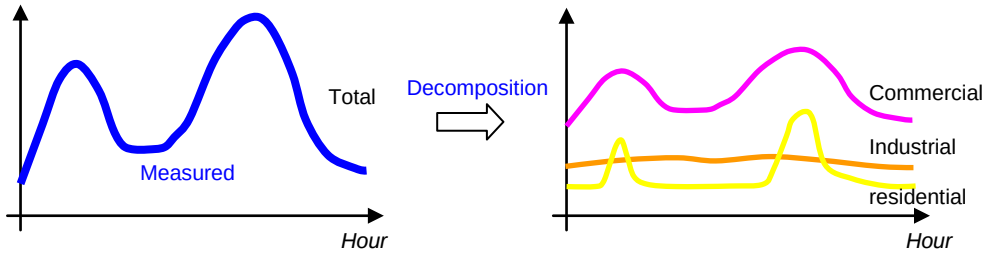

Figure 26 Curve Decomposition for Top-Down Load Composition Analysis

Load Monitoring for Load Composition Validation

Load profiles generated by the load composition model can be compared with load profiles derived from load monitoring data, e.g., historical SCADA data or building monitoring data. If the load composition model captures the right load characteristics, the load profiles should match SCADA data. Otherwise any mismatch can be used to calibrate the load composition model, e.g., tune load mix and adjust weights. The calibration methodology has yet to be developed.

Load Monitoring for Load Model Validation

General approach of model validation is to compare model simulation against measurements, as having been applied to WECC generator model validation. Load monitoring provides the basis for load model validation.

However, load model validation is far more challenging than generator model validation because of extensive uncertainties and variations of loads. It is almost certain that the variations and uncertainties would make the load model not match the next recording.

Therefore, load model validation should not focus on how close the curves would match, but should focus on principal load behaviors to match the impact of loads on system studies. If the load model would produce the right high-level system behaviors, it could be concluded that the load model matches the actual load characteristics in principle.

This "in principle" load model validation can be done in two ways: time-domain load model validation and frequency-domain load model validation. Time-domain load model validation compares the time series curves of simulated system level behavior and recorded monitoring data, while frequency-domain validation compares the frequency/damping contents of the simulation results and actual measurements.

Load monitoring data for this model validation purpose should have enough resolution and time length for capturing system dynamic behaviors. Examples of data sources include phasor measurements (PMUs), PPSM data, and potentially, measurements from the low-cost monitor device DMWG is developing.

Load Monitoring for Uncertainty Analysis

Statistical analysis can be performed on load monitoring data to quantify load variations over selected time periods. Load monitoring data needed for uncertainty analysis can be low resolution data like SCADA measurements or high resolution data like phasor measurements.

Load Monitoring for Load Control Performance Evaluation

It is the trend that loads will play a more and more active role in managing the power system. At the individual end-use level, SCE is developing solutions for prolonged voltage recovery as a result of a/c stalling. At a larger scale, active load control has been studied for the purposes of spinning reserves, damping improvement, frequency and power flow regulation, etc. Similar to generator performance monitoring, there is a need to ensure the load behaves as designed for correct credits and control enforcement.

Load monitoring data for load control performance evaluation range in a wide spectrum, depending on the control objective. High resolution data like phasor measurements are needed for evaluating load performance for damping improvement. Lower resolution data of long records are needed for evaluating load performance for spinning reserves, frequency and power flow regulation.

5.4.3 Recommendations

Continued research on load monitoring to support load modeling activities is needed for purposes of system validation and the potential use of top-down load models. Additionally load monitoring activities associated with direct load control offer opportunities not only for better load models, but also for loads to assist grid reliability.

5..4.4 Benefits to California

Model validation is important for maintaining accurate models that are used to establish reliable operating limits. Use of better models potentially increases reliability in California and the West. Additionally, on-line load monitoring offers the potential for adjusting load composition knowledge in an operating setting. In the long run this could influence operating decision with better information.

CHAPTER 6:
Uncertainty Analysis

6.1 Introduction

Analysis of power system dynamic behavior requires models that capture the phenomena of interest, together with parameter values that ensure those models adequately replicate reality. It is important to distinguish between model fidelity and parameter accuracy. Models are always an approximation. In many cases, the level of approximation is determined by the nature of the study.

The choice of models is a decision that should be made based on knowledge of the actual system composition and the phenomena that are being studied. Determining parameters for those models, on the other hand, usually relies on comparison of model response with actual measured behavior. Parameter estimation processes seek to minimize the difference between measured and simulated behavior. Different choices for model structure will usually result in different parameter values. This is a consequence of the estimation process trying to compensate for unmodeled, or poorly modeled, effects. In all cases, the models and associated parameter sets are approximations, though the goal should always be to obtain the best possible approximations.

Load models are further complicated by the fact that load composition is continually changing. Even if it were possible to obtain a load model that was perfectly accurate at a particular time, it would be inaccurate a short while later. Developing load models is not a futile exercise though, as overall load composition tends to behave fairly predictably. For example, the composition of a residential feeder will (approximately) follow a 24 hour cycle. But, while composition from one day to the next may be roughly equivalent, morning load conditions may well differ greatly from those in the evening. Seasonal variations may be even more pronounced.

As mentioned previously, all models are approximate to some extent. Model structures for large dominant components, such as synchronous generators, are well established, as are procedures for determining the associated parameter values. Furthermore, parameter values for such devices remain fairly constant over their lifetime. Models that represent an aggregation of many distributed components are much more contentious though, given the inherent uncertainty in the overall composition of the model.

This chapter focuses on uncertainty associated with load modeling. The details of this are provided in Appendix I. An extract and summary of that work is presented here.

6.2 Task Approach

Loads form the major source of uncertainty in power system modeling. Loads are highly distributed, and quite variable, so detailed modeling is impossible. Aggregation provides the only practical approach to incorporating loads into power system studies. For static (power flow) analysis, the approximations inherent in aggregate load models are largely unimportant,

as the composition of the load has little impact on results. On the other hand, load composition is very important in the analysis of system dynamic behavior. Different types of loads exhibit quite diverse responses to disturbances.

The apporach used in this report, and recommended for uncertainty analysis, is to use a sensitivity model to analyze uncertainties and related quantities of interest. In this report, trajectory sensitivities are calculated and used for the purpose. Trajectory sensitivities will be explained below. With this sensitivity model the following analyses are made possible:

- Uncertainty analsysis – characterize the impact of parameter uncertainty on the outcome of a dynamic simulation.
- Parameter ranking – by the sensivity of the response to parameter values.
- System stress indicator – by increased sensitivity to parameter values.
- Parameter estimation – to aid model validation.

The trajectory sensitivity model is used for these applications.

6.2.1 Trajectory Sensitivities

The time evolution of system quantities following a disturbance is referred to as a trajectory. For power systems, trajectories are driven by a system of switched differential-algebraic equations, with the switching required to capture events such as protection operation or limits being encountered. The details of this underlying model structure are not relevant to this report, and so are not included. A thorough discussion can be found in (Hiskens 2004). The concept of trajectories is important though, so a brief overview is provided.

The trajectory of a dynamical system depends on the initial conditions and the choice of parameter values. This dependence is expressed mathematically as the system *flow*, which can be written

$$x(t) = \phi(t, x_0, \theta)$$

where the initial conditions are given by $x_0 = x(0)$, and θ denotes the parameters. For a particular choice of x_0 and θ, the point on the trajectory at time t, denoted $x(t)$ is given by evaluating the flow ϕ at that time. Generally ϕ cannot be written explicitly, but instead is generated numerically by simulation.

The report focuses on the impact of parameter uncertainty on the trajectory. It will be assumed that the initial conditions remain constant[5]. For notational convenience, the dependence of ϕ on x_0 will therefore be ignored. Accordingly, trajectories will be given by

$$x(t) = \phi(t, \theta).$$

[5]All subsequent analysis and techniques can be extended to incorporate variations in the initial conditions.

Sensitivity concepts are generally associated with the linearization of an input-output relationship. Small changes in inputs map through the linearized relationship to small output changes. Trajectory sensitivities fit this framework by describing the changes in the trajectory (the output) resulting from perturbations in the underlying parameters and/or initial conditions (the inputs). They provide a linearization around the trajectory, as against small disturbance analysis which builds on linearization around the equilibrium point. Trajectory sensitivity concepts are not new (Frank 1998), though until recently progress on practical applications was impeded by:

- Computational inefficiency. Sensitivity to each parameter or initial condition required an additional full simulation.
- Non-smooth behavior. Sensitivities were not well defined for situations where events influenced behavior.

However both these limitations have recently been overcome, with efficient computation of trajectory sensitivities now possible for large-scale, non-smooth systems (Hiskens 2000).

Trajectory sensitivities provide an insightful way of quantifying the effect that individual parameters have on overall system behavior (Hiskens 2006). A trajectory sensitivity is simply the partial derivative of the trajectory, or equivalently the flow, with respect to the p parameters of interest,

$$\Phi_i(t,\theta) = \frac{\partial \phi_i}{\partial \theta}(t,\theta)$$

$$= \begin{bmatrix} \frac{\partial \phi_i}{\partial \theta_1}(t,\theta) & \frac{\partial \phi_i}{\partial \theta_2}(t,\theta) & \cdots & \frac{\partial \phi_i}{\partial \theta_p}(t,\theta) \end{bmatrix}$$

where ϕ_i refers to the i-th element of the vector function ϕ, or equivalently the i-th state, and θ_j is the j-th parameter.

Trajectories are obtained by numerical integration, which generates a sequence of points at discrete time steps $t_0, t_1, ..., t_N$ along the actual trajectory. The discretized trajectory will be described using the notation

$$\mathbf{x} = \left[x(t_0) \;\; x(t_1) \;\; ... \;\; x(t_N)\right]$$

Trajectory sensitivities can be calculated efficiently as a byproduct of numerical integration (Hiskens 2000, Feeherey 1997, Li 2000). The corresponding discretized sensitivities can be written,

$$\underline{\Phi}_i(\theta) = \begin{bmatrix} \Phi_i(t_0,\theta) \\ \Phi_i(t_1,\theta) \\ \vdots \\ \Phi_i(t_N,\theta) \end{bmatrix}.$$

Unfortunately, few commercial simulation packages currently provide trajectory sensitivity information. Approximate sensitivities must be generated by varying each parameter in turn by a very small amount, re-simulating, determining the difference in trajectories, and thus finding the sensitivity. The disadvantage of this method is that it is computationally expensive, and requires an additional simulation for each parameter.

6.2.2 Test System

Preliminary tests of trajectory sensitivities are applied to the following applications:

- Uncertainty analsysis – characterize the impact of parameter uncertainty on the outcome of a dynamic simulation.
- Parameter ranking – by the sensivity of the response to parameter values.
- System stress indicator – by increased sensitivity to parameter values.
- Parameter estimation – to aid model validation.

The examples throughout the report utilize the IEEE 39 bus system of Figure 27. All generators in this system were represented by a fourth order machine model (Sauer 1998), and were regulated by the IEEE standard AVR/PSS models AC4A and PSS1A (IEEE 1992). All generator and network data were obtained from (Pai 1989).

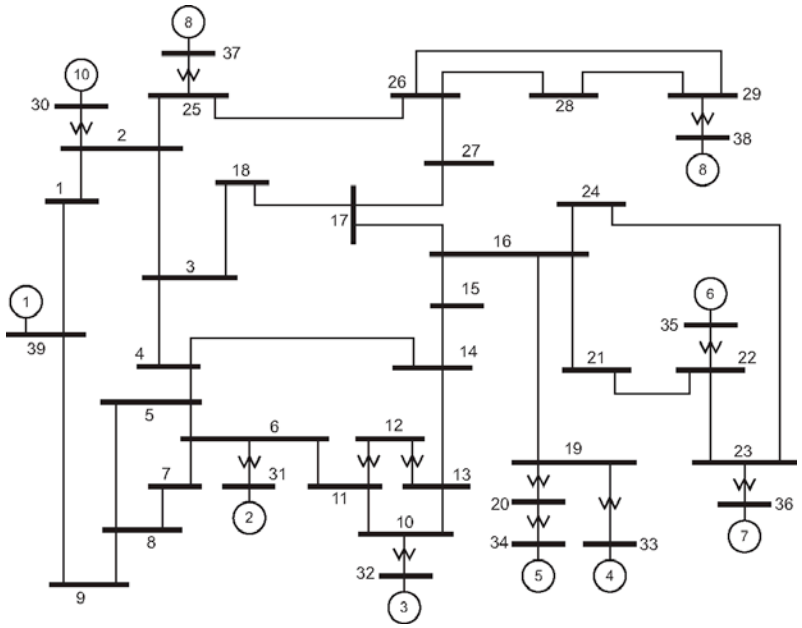

Figure 27 IEEE 39 bus system

6.3 Task Results

Details of results are presented in Appendix I. Here sample results for the applications are presented.

6.3.1 Uncertainty Analysis

The sample disturbance scenario involves a solid three-phase fault on line 16-21, at the bus 21 end. The fault was cleared after 0.15 sec by tripping the faulted line. That left buses 21 and 23, and generators 6 and 7, radially fed over line 23-24.

Figure 28 shows the separation[6] between the zone 3 mho characteristic (Blackburn 1998) and the apparent impedance seen from bus 23. The dashed line was obtained for a fault clearing time of 0.15 sec, and used the nominal set of load parameters. It remains above zero, suggesting the zone 3 characteristic is not entered.

Uncertainty was introduced into the load composition parameters. They were assumed normally distributed. A Monte-Carlo process was used to generate thirty random parameter sets, with the resulting trajectories shown in Figure 28. The figure also shows the 95 percent confidence interval[7]. Notice that it is quite probable for trajectories to pass below zero, suggesting the possibility of a zone 3 trip. Knowledge of the load composition is therefore very important in this case.

[6]This distance goes negative when the apparent impedance enters the mho characteristic.

[7]It can be expected that 95% of trajectories lie within that bound.

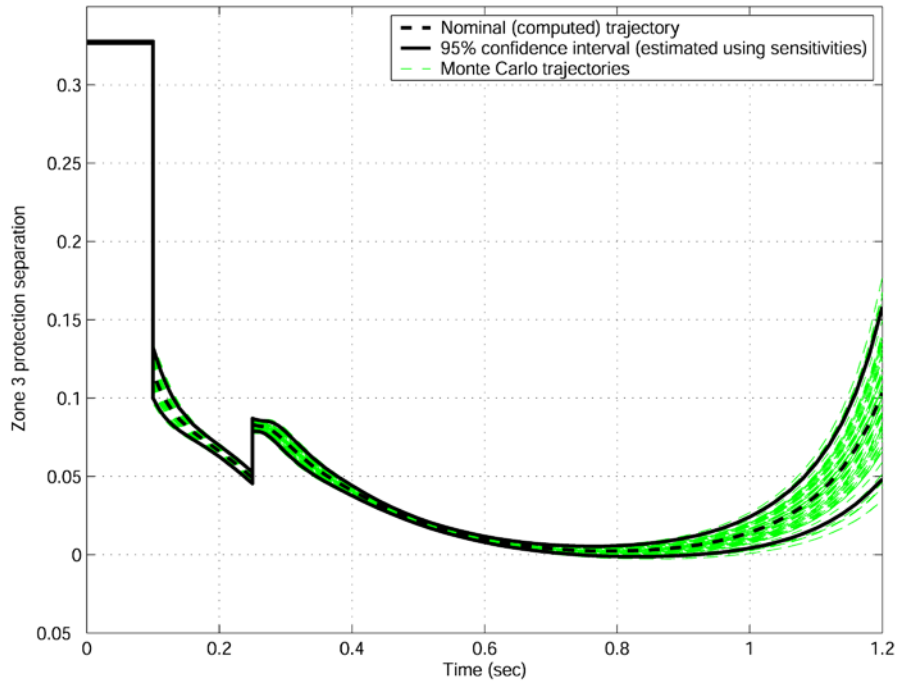

Figure 28 Zone 3 protection on line 23-24, 95% confidence interval bounds.

6.3.2 Parameter Ranking

Trajectory sensitivities provide a basis for ranking the relative influence of parameters. Large sensitivities imply that parameter variations have a large effect on behavior, whereas small sensitivities suggest behavior changes very little with parameter variation. In this example, trajectory sensitivities are used to rank the importance of voltage indices at all loads throughout the IEEE 39 bus system. A three-phase fault was applied at bus 16 at 0.1 sec, and cleared (without any line tripping) 0.2 sec later.

The sensitivities of bus 16 voltage V_{16} to load indices at all buses were computed in conjunction with the nominal trajectory. These trajectory sensitivities are provided in Figure 29, where the vertical axis gives the change in the pu voltage for a unity change in load index values. It is immediately clear that the real power index for bus 20 has a much greater influence on behavior than all other indices. (The reason is that generator 5 is marginally stable for this disturbance scenario, and bus 20 lies on the corridor linking that generator to the rest of the system.) The loads at buses 4, 8 and 23 also display a reasonable, though certainly less pronounced, level of influence. Loads 4 and 8 are influential due to their large size. Load 23 has an important impact on the dynamics of generator 7. The influence of all other loads, for this disturbance scenario, is negligible. Of course a different disturbance could possibly highlight some other set of loads.

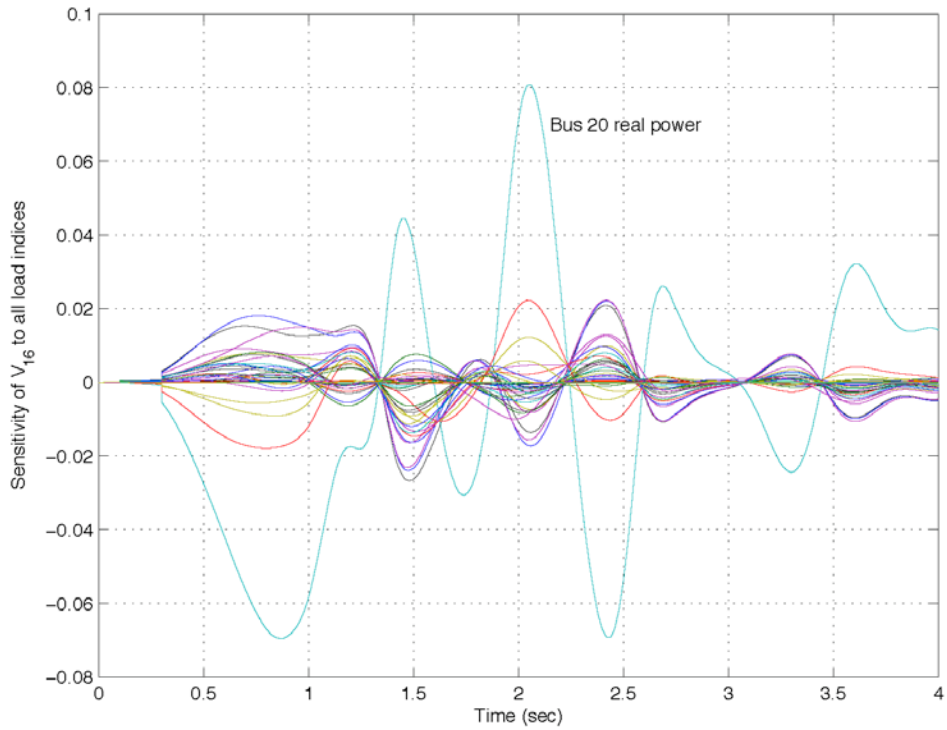

Figure 29 Trajectory sensitivities for all load indices.

6.3.3 System Stress Indicator

It is shown in (Hiskens 2006) that as systems become more heavily stressed, sensitivity to parameter variation increases significantly. This can be illustrated by continuing the previous example. The upper plot of Figure 30 shows the behavior of generator 5 angle (relative to generator 10) for a range of fault clearing times. (The fault clearing time used in the previous example was 0.2 sec.) The critical clearing time is 0.213 sec; slower clearing results in generator 5 losing synchronism. Notice that the angular deviations do not show a great increase, even though instability is imminent.

The sensitivity of V_{16} to the bus 20 load index, for the same range of fault clearing times, is shown in the lower plot of Figure 30. The deviations exhibited by these trajectory sensitivities grow dramatically as critical conditions are approached. This behavior motivated the sensitivity related measures developed in (Hiskens 1999, Nguyen 2002) to predict conditions that induce marginal stability. Further work is required though to fully understand and exploit this phenomenon.

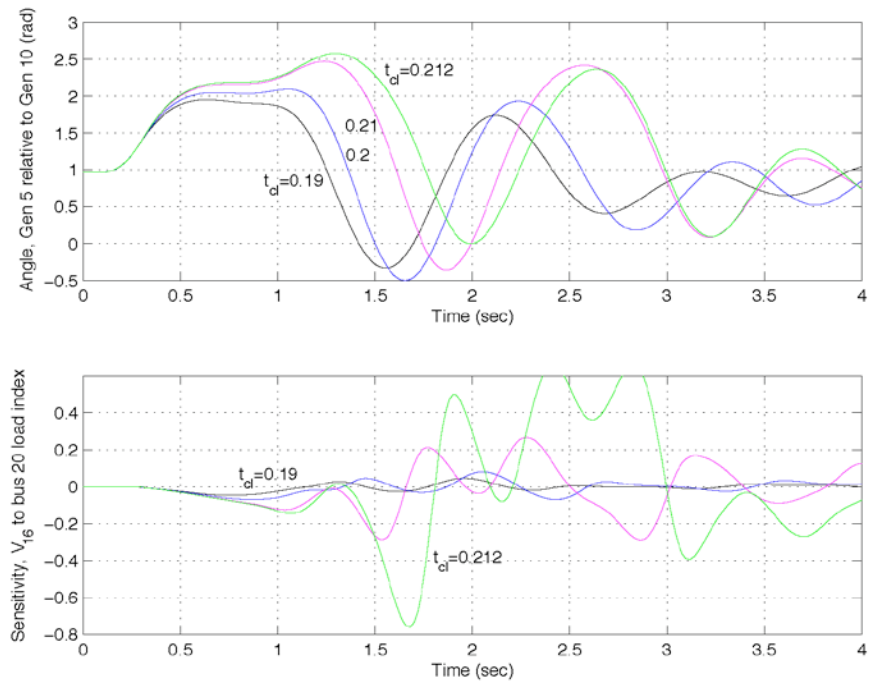

Figure 30 Trajectory and sensitivity variation for increasing system stress.

6.3.4 Parameter Estimation

It is often possible to estimate parameter values from disturbance measurements. For example, simply measuring the active and reactive power consumed by a load during a disturbance may yield sufficient information to accurately estimate several model parameters. The aim of parameter estimation is to determine parameter values that achieve the closest match between the measured samples and the model trajectory.

Disturbance measurements are obtained from data acquisition systems that record sampled system quantities. Let a measurement of interest be given by the sequence of samples

$$m = [m_0 \;\; m_1 \;\; \ldots \;\; m_N]$$

with the corresponding simulated trajectory being given by

$$\mathbf{x}_i = [x_i(t_0) \;\; x_i(t_1) \;\; \ldots \;\; x_i(t_N)],$$

which is the i-th row of $\mathbf{x}$. The mismatch between the measurement and its corresponding (discretized) model trajectory can be written in vector form as

$$e(\theta) = \mathbf{x}_i(\theta) - m$$

where a slight abuse of notation has been used to show the dependence of the trajectory on the parameters θ.

The best match between model and measurement is obtained by varying the parameters so as to minimize the error vector $e(\theta)$. It is common for the size of the error vector to be expressed in terms of the 2-norm cost,

$$C(\theta) = \|e(\theta)\|_2^2 = \sum_{k=0}^{N} e_k(\theta)^2.$$

The desired parameter estimate $\breve{\theta}$ is then given by

$$\breve{\theta} = \underset{\theta}{\operatorname{argmin}}\, C(\theta).$$

This nonlinear least squares problem can be solved using a Gauss-Newton iterative procedure (Hiskens 2001). At each iteration j of this procedure, the parameter values are updated according to

$$\underline{\Phi}_i(\theta^j)^T \underline{\Phi}_i(\theta^j)\Delta\theta^{j+1} = -\underline{\Phi}_i(\theta^j)^T e(\theta^j)^T$$

$$\theta^{j+1} = \theta^j + \alpha^{j+1}\Delta\theta^{j+1}$$

where $\underline{\Phi}_i$ is the trajectory sensitivity matrix previously defined, and α^{j+1} is a suitable scalar step size[8].

An estimate of θ which (locally) minimizes the cost function $C(\theta)$ is obtained when $\Delta\theta^{j+1}$ is close to zero. Note that this procedure will only locate local minima though, as it is based on a first-order approximation of $e(\theta)$. However if the initial guess for θ is good, which is generally possible using engineering judgement, then a local minimum is usually sufficient.

6.4 Conclusions and Recommendations

All models are an approximation, to some extent. Uncertainty in model-based analysis is therefore unavoidable. Model design should take into account the nature of the phenomena under investigation, with well-designed models minimizing the impact of unmodeled effects and of uncertainty. In power systems, the major source of uncertainty arises from the modeling of loads. Accurate modeling is particularly challenging due to the continual variation in load composition.

Trajectory sensitivities provide a numerically tractable approach to assessing the impact of uncertainty in parameters. Such sensitivities describe the variation in the trajectory resulting from perturbations in parameters. Small sensitivities indicate that uncertainty in the respective parameters has negligible impact on behavior. Large sensitivities, on the other hand, suggest that the respective parameters exert a measurable influence on behavior. It is important to minimize the uncertainty in the latter group of parameters. This can be achieved by estimating

[8]Numerous line search strategies for determining α are available in (Nocedal 1999) and many other references.

parameter values from measurements of system disturbances. The parameter estimation process seeks to minimize the difference between measured behavior and simulated response. This difference can be formulated as a nonlinear least squares problem, with the solution obtained via a Gauss-Newton process. Trajectory sensitivities provide the gradient information that underlies that process.

The impact of uncertain parameters is generally not significant for systems that are unstressed. As the stability margin reduces, however, system behavior becomes much more sensitive to parameter perturbations. It is particularly important to consider cases that are on the verge of protection operation. In such cases, uncertainty may make the difference between protection operating or remaining inactive, with the consequences being vastly different.

Various numerical techniques are available for assessing the impact of parameter uncertainty. Trajectory sensitivities can be used to generate approximate trajectories, which in turn allow parameter uncertainty to be mapped to a bound around the nominal trajectory. The likelihood that uncertain parameters may induce undesirable events, such as reactionary protection operation, can be assessed using these techniques.

6.4.1 Recommendations

Presently, sensitivity models are not routinely used in dynamic system studies.

Sensitivity models have tremendous value for the applications considered here and it is recommended that research be directed towards these topics. Furthermore, it is recommended model sensitivities should be investigated to understand the fidelity of the model being used.

A concrete and high priority recommendation arising from this research is to promote the use of sensitivity models for parameter estimation and model validation. The model validation exercise will serve to reduce the uncertainty in models, and increase confidence in system studies.

6.4.2 Benefits to California

Further research is required to develop the use of sensitivity analyses discussed in this chapter.

In the near term, subject to continued research, model validation efforts will benefit from the use of sensitivity model-based parameter estimation. Increased confidence in the models used to assess system conditions and to establish operating limits will increase system reliability that will benefit California and the West. The identification of most sensitive parameters will serve to flag potentially weak or stressed parts of the grid where the response is most sensitive to local conditions.

In the long term there is considerable potential benefit to the industry and California with increased use of sensitivity models. Similar to the approach advocated here for uncertainty analysis, risk-based decision making procedures will rely on sensitivity models. Such applications will require significant research to better understand the uncertainties involved.

CHAPTER 7:
Solar Generation and Load Models

The complete white paper prepared under this task is Appendix J, from which this Chapter is extracted.

7.1 Introduction

As concerns of climate change intensify, renewable energy technologies such as photovoltaic (PV) generation are being deployed in large scale within the electrical grid dominated by conventional electricity sources such as coal, natural gas, and nuclear generation. Solar power generation has been expanding rapidly. Annual PV installations in the United States increased42 percent from 145 MW in 2006 to 206.5 MW in 2007. Most of the growth occurred in the grid-connected sector – to over 150 MW during 2007. At the State Government level, renewable portfolio standards (RPS) requiring electricity utilities or electricity providers to supply a certain quantity of their delivered energy from renewable energy sources such as PV have been adopted in 25 states and the District of Columbia. These requirements call for as much as 20 percent to 30 percent of electricity to come from renewable energy sources in the next 15 to 20 years (IEA 2008).

According to a utility solar assessment study, the solar contribution could be quite considerable, realistically reaching 10 percent of total U.S. electricity generation by 2025 by deploying a combination of solar photovoltaic (PV) and concentrating solar power (CSP).

More than 90 percent of the installed PV capacity is connected to national electric grids (Picault 2009). The increasing connection of distributed generation at distribution levels from a certain penetration level may not only influence the operation and design of distribution systems, but also affect to the operation and stability of transmission system as well. In impact studies for installing these generation systems, the transmission system is generally modeled as a strong – sometimes even as an infinite – voltage source. Thus, the weakening effect that comes with high penetrations of DG therefore has been neglected. Transmission systems in the future however will become weaker and the DG systems may affect significantly the behavior of underlying distribution systems and consequently transmission systems. While there have been some studies of the potential impacts of PV systems on the distribution systems (Thomson 2007), there are no significant works analyzing the impacts of those on transmission systems (Boemer 2009). Investigation impacts of PV systems on power systems become more important as the penetration level increases.

7.2 Task Approach

In this chapter, a state of the art literature survey is conducted, with a goal to establish a simple and accurate empiric modeling of PV systems to complement load representations that are commonly in use for power system load flow and power system stability analysis studies.

Such a PV model may be used to analyze the impact of PV systems on the transmission systems and distribution systems. The desirable model will permit the representation of all PV systems installed in a distribution area as an equivalent active load by using the source aggregation techniques. To be sure, the model intended will depend on parameters such as installed power, penetration level, location of system, weather condition, rated electrical values etc.

7.3 Task Results

7.3.1 PV System Models

A block diagram of a grid connected PV system is shown in Figure 31. As may be observed from the block diagram, the properties and behavior of the system will be affected on the output I-V characteristics of photovoltaic array, a maximum power point tracking (MPPT) function generally incorporated in the DC-DC converters, and the DC-AC inverter, besides variations in the solar insulation.

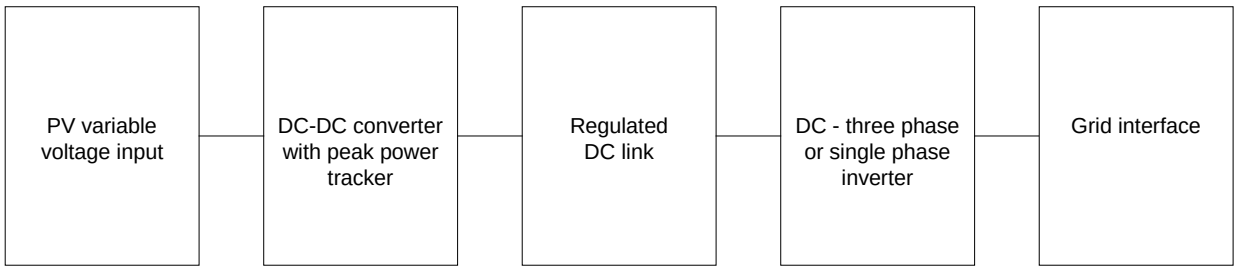

Figure 31 Block diagram of typical grid-connected PV system

.

There have been parallel efforts to develop models suitable to study their individual impact within the PV generation system and at the grid interface. These models may be classified into three groups: (a) model based on characteristics of PV array, (b) model based on characteristics of specific inverter structure and (c) overall PV system model. The last model is much convenient for interacting with the traditional power flow analysis to obtain steady-state operating status of power grid and PV system. The overall system models use the principle of instantaneous power balance and the principle of power electronic transformation (Wang 2008, Pananikolaou 2009). Model development for study of single PV based generation devices have generally focused on developing tools that enable time-domain simulation using tools such as PSCAD, Matlab-Simulink, EMTP, etc. (Yazdani 2009) provides an excellent overview of the state of the art from this perspective.

On the other hand, among the models that are aimed at studying their collective behavior and investigate the effects of PVs on power systems, most of them are related to impacts on the distribution systems (Azmy 2004, Canova 2009). The few works related studying impacts on transmission systems (Thong 2007, Reza 2003), consider general DG technologies beyond PV systems, with machines such as synchronous and induction generators.

Most of the modeling studies of PV systems have generally been based on analytical methods. Although these models exhibit the behavior of PV systems with certain accuracy, they do not reflect the response of PV systems to variable conditions in irradiance, grid voltage, etc. While there are some studies which present experimental test results in grid-connected PV systems in order to show interaction between PV systems and power systems (Thomson 2007), they have not been generator capable of simulating its response to changes in irradiance and grid voltage is established. However, the effect of variations in grid frequency has not been taken into consideration in the model.

7.3.2 PV System Modeling Issues

When modeling the PV systems in the electric power systems, major issues to be accounted may be grouped into two categories; steady state concerns and transient concerns, as discussed further in the following sub-sections.

Steady State Concerns

The main steady state issue concerning PV generation is the variation of power generation, which is affected by environmental factors such as location, weather, and climate. The single major parameter that affects the output power of PV generator is the irradiance. Since the irradiance is related to latitude, geographical location of PV systems is used to estimate the irradiance consequently output power.

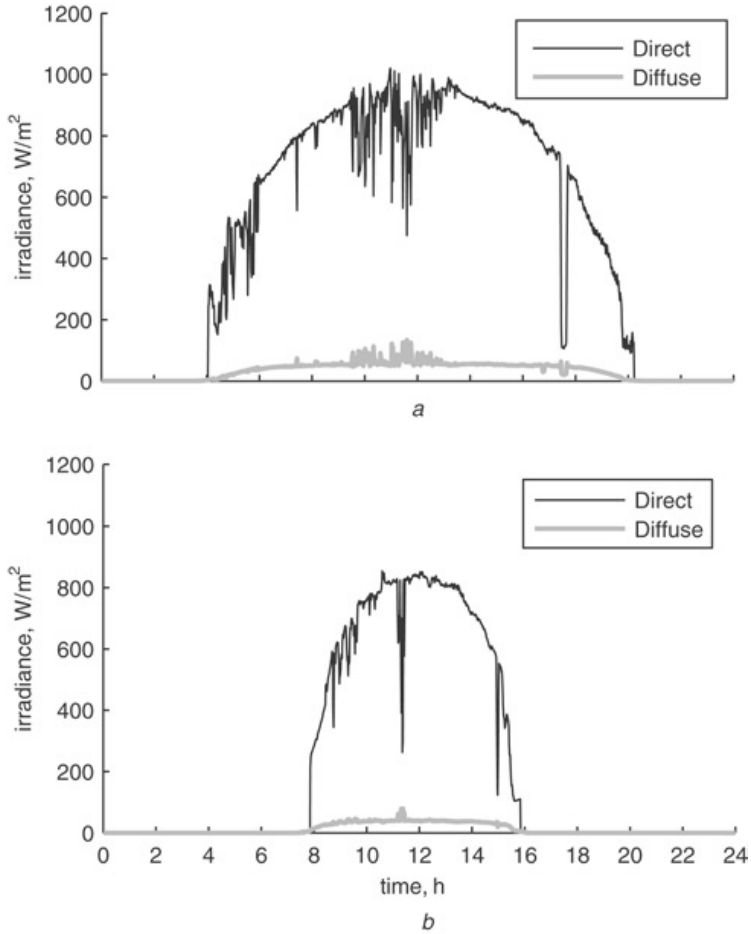

Figure 32 A graph of measured direct and diffuse irradiance on (a) a summer day, and (b) a winter day (From Thomson 2007)

For instance, it has been observed daily average irradiance values ranged from 5.0 to 7.5 kWh/m^2/day from a measurement study in which the nineteen monitored systems are located at geographically diverse sites from San Diego County in the South to Willits in the North (Scheuermann 2004). Besides the location, the irradiance changes from hour to hour, day-to-day, or month-to-month, output of the PV system may vary with time. For selected summer and winter days, direct and diffuse irradiance measured in study is shown in Figure 32, (Thomson 2007). As shown from figure, irradiance changes not only during daytime, but also with season.

PV array power output varies depending on module temperature besides irradiance level. It means that PV array output consequently depends on the weather conditions such as ambient temperature and wind speed. Thus, alternative approaches based on weather rather than cell temperatures may be used to develop system capacity estimates (Scheuermann 2004).

The steady state irradiance at the location may be more readily integrated with the power system modeling tools. There are some data sources open to public related to PV generation. European Commission Photovoltaic Geographical Information System has interactive maps for Europe and Africa (PVGIS). National Renewable Energy Laboratory has solar maps for USA (NREL). These organizations have dynamic solar maps that calculate daily and monthly

irradiance throughout the year. Using these data, it may be found the solar insolation for a given location and a specific time.

On the other hand, the properties of the PV generation system itself are more difficult to aggregate. The immediate variability conditions of the generation system will depend on the type of solar array, orientation of the solar array, aging of the solar array, dust, dirt, and snow build up on the solar array, microclimate conditions such as local cloud-cover, etc.

Transient Concerns

The properties of the components that comprise the PV generation system contribute to the transient issues that affect the behavior of the generation system in the electric grid. The transient concerns that would to be considered in developing the model may be conveniently represented by the voltage and frequency sensitivity PV array properties, MPPT dynamics, DC-DC converter dynamics, overall power conversion efficiency, anti-islanding protection and decoupling protection which inverters for PV systems should comply with, etc.

Frequency and Voltage Sensitivity

Determining the real power and reactive power sensitivity with respect to grid voltage and frequency is required to model PV system accurately. The response of a commercial PV generator to grid voltage change has been studied in laboratory conditions as reported in (Yun 2004). Figure 33 illustrates the variation of system output real power to voltage variations at the grid connections. In this study, the effect of frequency change has not been considered. While the power factor (PF) of the PV system is typically 1.0 in residential applications, central power stations can be produced reactive power to realize local voltage regulation. The need and impact of such operational variations have not been definitively established and hence a study of the system with respect to voltage and frequency is in order.

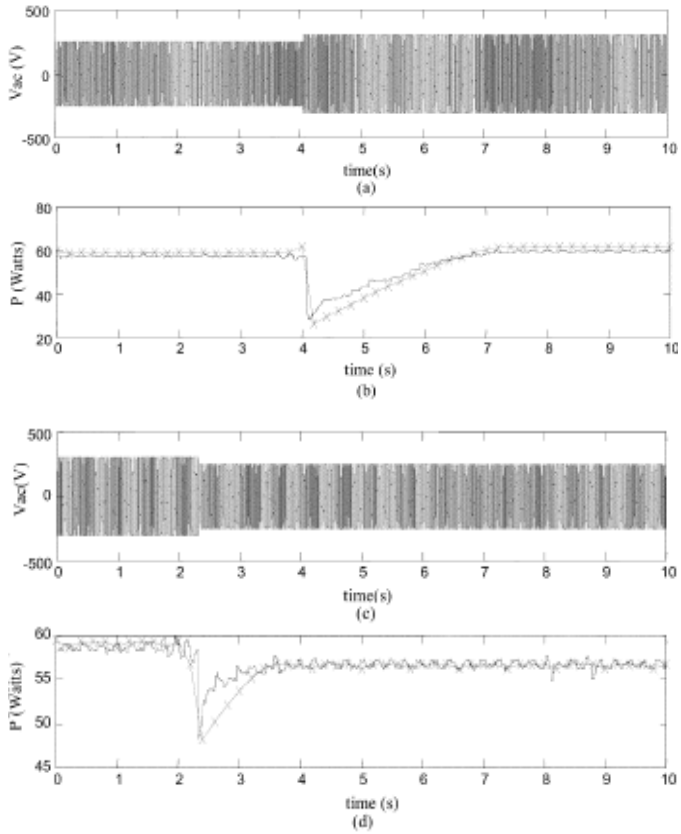

Figure 33 Response of the PV generator to increase and decrease in grid voltage (From Yun 2004)

MPPT Dynamics

A field survey of 387 different models of PV generation systems below 10 kW reported in (Salas 2009), found that all the units contain a MPPT module. Furthermore, the results of experiments carried out with three different inverters have indicated that the response time of PV generating units is significantly affected by MPPT module dynamics and efficiency (Yun 2004). Therefore MPPT dynamics of inverters that form the aggregate representation should be accounted appropriately in the system level models.

Efficiency and derating

While a typical PV system may be rated at a particular power level, equipment dynamics can have drastic impact on output of the system. Power conversion efficiency of the PV system and the de-rating factor of the design together may affect the output power of the system when grid voltage and frequency have variations. The de-rating factors and conversion efficiency may be in 0.1-0.96 ranges, while efficiency may be in the 0.7-0.98 ranges depending on the operating conditions and design cases. Therefore incorporating the collective behavior among these factors is also important in developing an appropriate system level model

Array properties

The solar array of the PV system may vary depending on the crystal used in solar cells; monocrystalline, polycrystalline and amorphous. Since solar cells produced from these

materials have different levels of efficiency and aging behavior, consequently efficiencies and behaviors of PV arrays composed various solar cells also show variety.

Protection set points

Islanding is a condition that occurs when a portion of the utility system is disconnected from the reminder of the utility system but remains energized by the distributed resource (DR). Due to concerns associated with islanded system such as safety issues for service personnel and asynchronous reclose which can cause equipments to damage, the islanding is not usually desired (Wang 2009, Kunte 2008). Thus behavior of the anti-island function of the PV inverter should be considered in terms of its behavior during utility disconnection and disturbances.

Furthermore, compliance settings related to standards for distributed energy resources such as IEEE-1547, Ul-1741 require decoupling protection requirements besides other regulations. For instance, a survey of the voltage tolerance curves presented in (Kunte 2008) which investigate 9 commercial PV inverters in the range of about 0.2 to 4 kW reports that all inverters except one are highly sensitive to voltage sags. None of them are capable of withstanding any voltage sag deeper than percent50, lasting longer than 40 ms, as illustrated in Figure 34. Furthermore, voltage rise may also occur at the point of interconnection to the grid. Since interconnection requirements require disconnection during abnormal voltages, PV systems would disconnect themselves from the power systems under such conditions subject to their protection settings, and variable dynamics in response time. Therefore, it is important to consider and include these aspects in the PV system model representation to ensure faithful predictions from the studies.

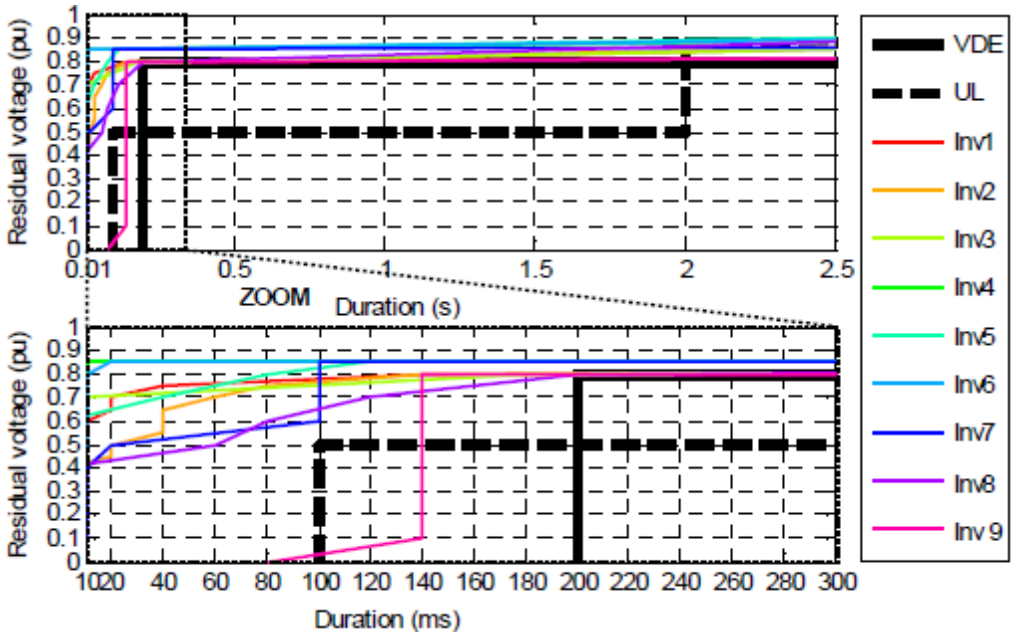

Figure 34 V Voltage tolerance curves of 9 commercial PV inverters (From Kunte 2008)

Penetration and census

Because the effects on the power systems vary with levels of PV penetration and type of PV generation system from among different commercial manufacturers and vendors, these aspects will have to be accounted appropriately in developing the system model.

7.3.3 Candidate System Model

Within the context of power system studies, system components such as power sources, loads, transformers and interconnections are widely modeled in an aggregate manner. In this mix, considering the PV system as an active load that injects energy into power system may provide more convenience, since they have not internal inertia. However, establishing the representative analytical model that presents accurately the characteristic of grid-connected PV systems is particularly challenging in light of the discussions presented above. Alternatively, empirical model may be a more practical solution, based on laboratory scale experimental results and data from the real field measurements (Yun 2004, Salas 2009, Bletterie 2005). Such load modeling approach in power systems is among the preferred approaches in developing and validating modeling tools (Kosterev 2008).

It should be mentioned that detailed component-level models (such as those including models of PV array, MPPT part, power electronic converter, etc.) are suitable for analysis of specific PV unit or grid-independent PV system. But the precision of such modeling is generally lost in grid-level studies, where wide aggregations are made of large number PV units (such as residential area installed PV units). Therefore grid-level models that reasonably represent of PV units on the power systems should be main motivation of this study. Towards this aim, an appropriate aggregation method similar to that applied in the load aggregation may be used in order to represent the combined effect of the PV systems installed in a distribution area (Price 1988, Nozari 1987).

With such an approach, a simple, practical and faithful PV system model for electrical power systems may be established. The approach should also use an aggregated representation of distribution systems with dynamic and static loads as well as PV systems that is adequate enough for system level studies. Figure 35 illustrates a candidate representation for PV installations within the distribution system by including a 'PV load model' to exist the load model structure.

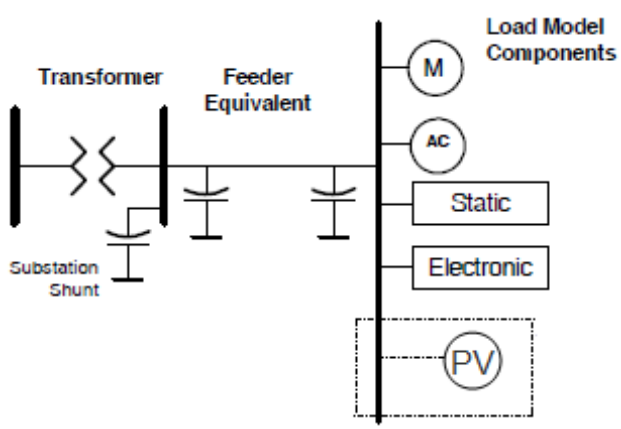

Figure 35 Structure of a candidate PV system model to be incorporated within the framework of load modeling

The heart of the candidate model is the behavioral representation of the inverter component including the various dynamics such as efficiency, MPPT and protection functions. In order to develop this, detailed tests may be carried out using several commercial PV inverters found in the market. The objective of these tests is to investigate the inverter dynamics performance during some events typically found in the grid such as voltage, and frequency fluctuations and oscillations. Additionally, transient response tests may also be carried out. For instance, a switching transient test may be used to determine the time delay when suddenly the inverter is connected to grid. Inverter anti-island test, short circuit test, rapid power fluctuation test, etc, will provide complementary data to develop a faithful system representation. Based on test data from an array of tests on a variety of inverters, an aggregate representation that provides a weighted average of model parameters depending on the distribution of different devices among the population within the distribution system.

The development of a practical model with a user-friendly interface will be a challenging task, even given all the representative test data. The results from the test data would be classified and correlated for similarities, and differentiated for variations and an appropriate model representation to accurately represent the bulk behavior will need to be developed. On the other hand, based on the model it would be very easy to obtain results needed by entering some parameters, such as installed power, penetration level, population distribution among different manufacturers' inverters as appropriate, location of system, weather conditions, rated electrical values, into the appropriate program interface.

7.4 Conclusions and Recommendations

7.4.1 Conclusions

In this chapter, various issues related to PV generation system representation in power system studies have been discussed. A survey of the state of the art has been presented, highlighting the particular limitations and useful approaches in the literature. A summary conclusion may be stated as,

> Though there are several PV modeling studies, none of them are suitable for power flow analysis at the grid-level studies in which wide aggregations are made of large number PV generation sources.

7.4.2 Recommendations

Various parametric and sensitivity aspects of PV generation sources have been identified and discussed on the basis of the literature in the field, and a candidate modeling approach has been presented. The immediate step in developing the approach further is initiating, conducting and completing comprehensive tests on commercial PV generation inverters in laboratories capable of providing grid emulation. It is learned that Southern California Edison is initiating such tests in concert with the National Renewable Energy Labs (Bravo 2009).

On the basis of the results from the tests, an aggregation and representation method may be developed as a follow on activity. Such an approach will lead to useful and practical tools for studying and preparing for high penetration of PV in the electric grid.

7.4.3 Benefit to California

The purpose of the white paper developed under this task was to review PV modeling and recommend further research if needed. PV systems are expanding and will impact the power grid in California. The recommended research, some of which has already been initiated by SCE, should be considered a high priority. Knowledge of PV impact on the electric grid is necessary for reliable operation of the grid.

CHAPTER 8:
Fault-Induced Delayed Voltage Recovery

This task follows on the potential solutions to the delayed voltage recovery problem presented in Chapter 3. The information in that chapter is based on tests and studies conducted by SCE. The white paper prepared under this task gathered information on this phenomenon from other sources, including the DOE workshops focusing on fault-induced voltage recovery. In other sources, and commonly now, this phenomenon is called, "fault-induced delayed voltage recovery (FIDVR)." The white paper is presented in Appendix K.

8.1 Introduction

Fault-induced delayed voltage recovery is not a new phenomenon. While most reports of events are anecdotal, there are a few published papers describing certain events and studying the causes. In regions with a high percentage of air conditioner loads, the problem persists.

In their 1992 paper (Williams 1992), engineers from Southern California Edison discuss voltage recovery problems they had encountered in the desert regions that they serve. The largest event involved a 1000 square mile region. They also mention other similar incidents at other utilities, including a major blackout in Memphis in 1987.

In his 1997 paper (Shaffer 1997), Florida Power and Light Engineering John Shaffer reports eight incidents of delayed voltage recovery over the preceding decade. These resulted in 200-825 MW of lost load. He mentions a 1988 event with a 10-second voltage recovery. He also points out that most of the load loss was actuated by device protection (in contrast to system controlled protection).

More recent events are not described in journal articles, but have been presented at conferences and workshops. Southern California Edison continues to observe FIDVR events and they are leading research to study causes and propose solutions. One paper presents an undervoltage protection scheme and also shows a plot of a recent disturbance with a 30 second voltage recovery time (Lu 2009).

The state of the art in FIDVR reporting and research has been presented at two recent DOE workshops, in 2008 and 2009. The presentations from these workshops and the related NERC whitepaper summarize present activity in this area[9] (NERC 2008). Events mentioned in presentations at the 2008 workshop include

- More than 50 events observed in Southern California Edison (Devers, Antelope, Vally, Lugo, Rector, Villa Park). The Lugo plane crash resulted in 3500 MW lost load.[10]

[9] 2008 workshop presentations are available at http://sites.energetics.com/acstallingworkshop/agenda.html

The 2009 workshop presentations are not yet posted.

[10] Bob Yinger, "A/C/ Stalling at SCE," DOE Workshop, April 22, 2008.

- Several incidences in the Arizona Public Service:[11]
    - 2 Pinnacle Peak Capacitor Faults. The second resulted in 1000 MW load loss.
    - Hassayampa 500 kV Fault. Loss of 440 MW load and 2600 MW generation.
- Southern Company[12] reported on the Union City event in which 1900 MW of load was lost. Almost all the load was tripped by induction motor protection.

At the 2009 FIDVR workshop emphasized the following items:

- Studies suggest that SVCs help alleviate the problem but does not prevent A/C from stalling therefore the FIDVR events may still occur
- Studies also suggest that undervoltage protection devices in A/C units prevents the FIDVR events but creates another problem that is instantaneous overvoltages at high penetrations for these devices.
- The proper solutions is to have the A/C units ride thru the voltage transient or trip only the A/C units that stalled
- NERC TIS will be creating a site under their website to incorporate FIDVR so that other utilities in the country learn from the California experience.

It is clear that FIDVR events can be consequential, they persist, and they pose a challenge to the reliable operation of the power grid.

8.2 Task Approach

Information is gathered from studies conducted under this project, the literature, meetings and workshops. Researchers examine the underlying causes that drive FIDVR events, predominately the stalling of compressor-driven induction motors, and discuss potential solutions. These include the changes that could be made to units, and system controls that could mitigate FIDVR. The challenges with implementing the solutions are examined.

8.3 Task Results

8.3.1 FIDVR Phenomenon

To consider solutions to avoid or mitigate FIDVR, it is necessary to study the cause. The physical mechanism to explain the phenomenon is related to the end-use load characteristics of air conditioners and other motor-driven compressor loads. To understand how these end-use devices react to faults, and how they can affect a slow-to-recover depressed voltage, it is necessary to consider their operation in detail.

For a compressor, the average mechanical load faced by an induction motor increases as it literally drives pistons (reciprocating compressor) or turns a "scroll" (scroll type compressor) to compress a gas. The more it is compressed, the greater the operational motor torque is needed.

---

[11] Baj Agrawal, "APS Experience," DOE Workshop, April 22, 2008.

[12] Taylor, "Recent Experience with Fault Induced Delayed Voltage Recovery," DOE Workshop, April 22, 2008.

The electrical torque capability for an induction motor is nonlinear and depends on its operating speed. Figure 36 shows a typical "torque-speed" curve for an induction motor.

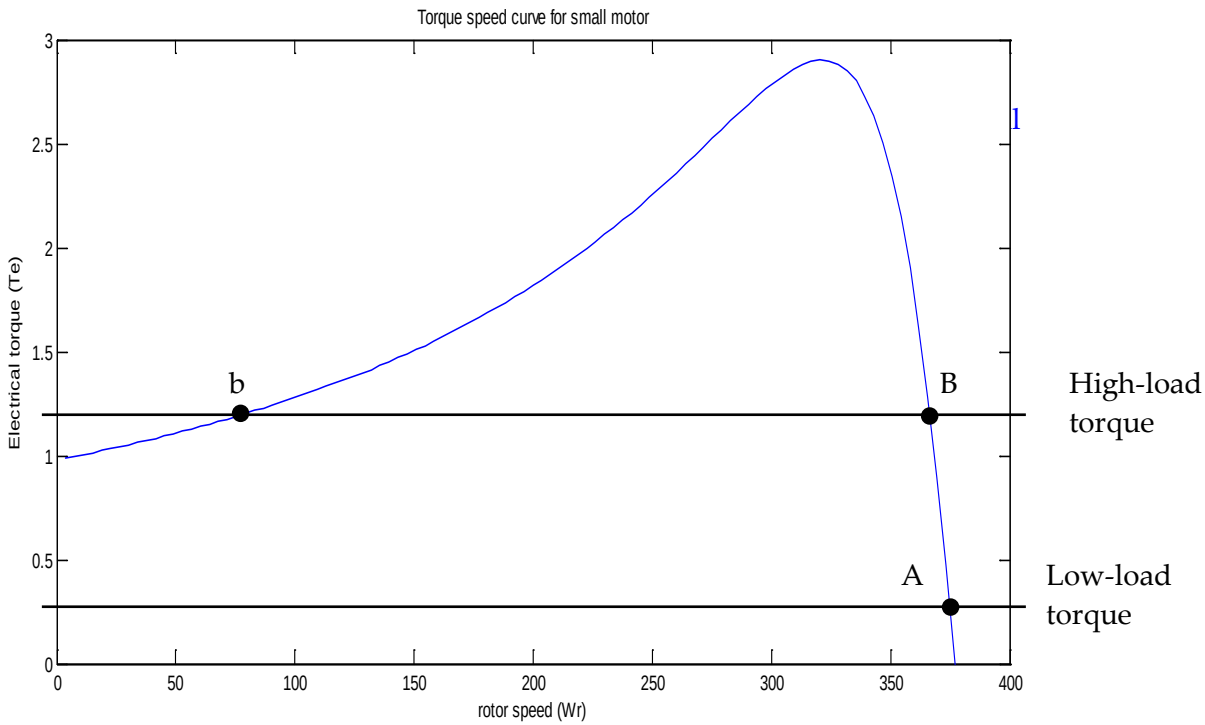

Figure 36. Torque Speed Curve for Motor.

The horizontal axis in Figure 36 is the motor speed expressed in electrical radians/second, and ranges from zero (blocked rotor or stalled) to synchronous speed: 2π60 (60 Hz). The vertical axis is torque. Superimposed on this plot are two straight-line mechanical load torque curves; one is a low load line meant to represent the compressor when it has been inactive for several minutes. The high load line represents the normal operating load under compression. Important for this discussion is note that the zero-speed electrical torque is less than mechanical torque load. (This is discussed more below.)

When a compressor initially turns on after a few minutes of inactivity the load torque is low, and the motor quickly accelerates to normal high-speed operation. This is denoted by point "A" in Figure 36. With increased compression the mechanical load torque increases and operation tends to point "B" on the plot. This is the normal operating condition for the compressor, and this torque represents the equality of average load torque and electrical torque. For this level of mechanical load there is a second equilibrium denoted as "b" in the plot. Dynamically this other point is unstable.

For purposes of using Figure 36 to describe the phenomenon of FIDVR, note that this high load torque line intersects the zero-speed axis at a point higher than the electrical load torque. That is, the load torque exceeds the zero-speed torque capability of the motor; if the motor were to

stall, it would not be able to restart. And that is exactly what happens: a temporary fault drops the voltage low enough for air conditioner motors to stop, and they are unable to restart when the fault is cleared. The stalled motors draw significant current which causes the observed depressed voltages. Protection equipment eventually remedies this situation.

Motors have two types of protection that are relevant: Contactors that disconnect when the voltage drops below 40 percent, and an inverse-time characteristic current relay (thermal protection). In practice the stalled voltage is typically larger than the 40 percent threshold, so the stalled motors stay connected to the grid. The thermal protection does actuate, removing the stalled motors from the grid. As the motors trip off-line, the voltage recovers. The motors don't trip off simultaneously (3-15 seconds according to one manufacturer[13]), so the recovery appears gradual. The "delay" in "delayed voltage recovery" is due to the delay in motor thermal protection operation.

Once the motors are offline, they will remain offline for some time, until the compressor pressure equilibrates and the motor can restart. (Readers with newer air conditioners, dehumidifiers and other compressor-driven loads may be familiar with this characteristic: these appliances will delay a few minutes to restart after they have been turned off.) The grid response to the accumulated loss of load is to increase the voltage above pre-fault level. As previously noted, network controls will react to then lower the voltage.

The second vulnerable region occurs when air conditioners turn back on. This increased load draws the down the voltage, and without reactive power support the system is potentially susceptible to subsequent events.

The phenomenon as described in the preceding paragraphs is generally accepted as the fundamental mechanism, and it is the mechanism described in the early papers (Williams 1992, Shaffer 1997). More recent testing and model development conducted in the WECC supports this description of the FIDVR mechanism.

There are a few recent additions to the knowledge in this are that are worth mentioning. The models that are examined in the early papers represented an induction motor driving an assumed constant load torque. There are two deficiencies related to the mechanical load in that model: the inertia of the compressor is over-estimated, and the mechanical load torque is not constant. Both of these points help explain the very fast stalling time observed in laboratory tests and in the field. The air conditioner load appears to stall during the fault - measured in cycles. In the models used in the early papers the stalling of the motors is simulated by assertion – when there is voltage drop below a certain threshold, the motor is declared to be in a stalled state. Whereas simulation of the motors using parameters given in the papers do not necessarily capture such a quick stall. In (Shaffer 1997), critical clearing times are given for three motor models subject to faults of varying severity. For those severe faults with a fault voltage of 0 volts, the critical clearing time to avoid a stall ranges from 2 to 6 cycles. For fault

[13] Jayanth, J., and H Pham, "Residential AC Compressor: Low Line Voltage Behavior," DOE Workshop, April 22, 2008.

voltages in the range of 50-55 percent nominal, the critical clearing time ranged from 5 to 21 cycles, depending on the initial load torque (with the range of 19-21 cycles for 1.0 pu torque). The tests in (Williams 1992) demonstrated that the air conditioners stalled within 5 cycles (their fastest test) for fault voltages below 60 percent. Recent laboratory tests note this quick stall - within 3 cycles (their fastest test) (Gaikwad 2008).

The models and measurements can be reconciled. First the assumed inertia in the early simulations is too large (H = 0.28 seconds). After recent testing, a compressor was disassembled, the rotor pulled, and its inertia was estimated to be H = 0.03 seconds. Laboratory tests suggest an inertia of H=0.03 to 0.05 seconds. This suggests a much greater propensity to stall.

Second, the load torque is not constant. One of the comments on the Shaffer paper suggested that the compressor torque may not be constant (Pal 1997). At the time, design engineers had informed the author that the torque could be considered constant for a few seconds after a fault. Recent conversations with air conditioner manufacturers indicate that the load torque is position dependent as the motor drives pistons (reciprocating) or turns the off-center scroll. The compressor load torque resembles a strong triangle wave, and the peak mechanical load torque may exceed peak electrical torque during operation. The compressor relies on the motor inertia to carry through this peak.

The WECC Load Model Task Force has been active in developing improved load models to simulate FIDVR phenomenon. That work has resulted in the development of two models for simulating compressor-driven motors, presented earlier in Chapter 2. The static performance model captures the running and stalled voltage-dependent load characteristics of the motors, with a voltage-specified transition point. A dynamic phasor model suitable for use in positive sequence simulations was developed from a traditional single phase motor model. Both are being incorporated in the standard simulation packages used to study power system behavior in the WECC.

8.3.2 Solutions

Eliminating FIDVR events will be challenging. The NERC whitepaper (NERC 2008) emphasizes this point in its executive summary: "FIDVR events can – and have – occurred following faults cleared in as little as 3 cycles! The number and impact of FIDVR events can be decreased, but their elimination in the near term is unlikely." (Their emphasis.) To eliminate these events, it would be needed to prevent the air conditioner motors from stalling. Even if new air conditioners were manufactured to avoid stalling, widespread use of new units to replace the existing installed base would take many years to change.

Customer-Level Solutions

The most effective controls may be implemented at the source of the problem: the air conditioning units. There are at least two changes that could reduce FIDVR event or severity of events:

1. Low voltage ride through. Units could be designed to withstand low voltage conditions for a short time to prevent stalling during the fault.

2. Low voltage disconnect. Units could be quickly tripped when the voltage drops to a point at which they would stall. Then, the units would return to operation after random delays, to stagger the return of load.

The first item is ideal in that it would eliminate the problem for normally cleared faults. The application of this solution would require not insignificant changes to the present design of units. One could consider over-sizing motors such that the no-load electrical torque exceeds the normal mechanical torque, with the idea that the motors would be able to restart upon re-excitation after the fault clearing. However, it is not clear that this would be successful – if motors did stall during the fault but attempted to restart simultaneously after the fault, it is likely the voltage would remain low initially. This approach would likely lessen the duration of the event, as some motors trip off-line others may succeed in restarting. Alternatively, one could increase the inertia of the motor/compressor to provide stored mechanical energy with which to ride through the event. Finally, local electrical energy storage coupled through power electronics (also driving the motor), could be implemented to achieve a low voltage ride-through capability. These latter two solutions are technologically feasible, but would increase the cost of such units. It should be expected that manufacturers would be reluctant to implement these without further and equal motivation. Any such changes would likely required modification of standards so that all manufacturers are provided the same objective.

The second item – low voltage disconnect – is practical, and offers the opportunity for effective retrofitting. This type of protection could be implemented on new units, and while it would increase costs, it is not likely be large compared to the solutions mentioned above. Also, this solution could be implemented by under-voltage relays or digital thermostatic control. The low voltage disconnect and delayed reconnect could be programmed into a modern thermostat.[14] A program to retrofit digital thermostats could reduce the FIDVR problem when coordinated with system controls, and it should be considered. (See Lu 2009 for an analysis of under-voltage protection schemes in this context.) More generally, new communication and control technologies that enable a customer to actively participate in grid function (i.e., the "smart grid") could be applied to FIDVR problems.

Unfortunately, the low voltage disconnect solution does not address all of the problem. It should effectively eliminate the delayed voltage recovery portion of the behavior at the expense of immediate loss of load. This will likely result in immediate overvoltages in the system. System level controls would need to be designed to handle this situation.

System Solutions

[14] To use thermostatic control, the thermostat would need some detection of low line voltage. Otherwise, an under-voltage relay can perform a similar function.

System solutions are covered in detail in the NERC whitepaper (NERC 2008). These solutions include

1. Reduced fault clearing time. This may reduce the occurrence of events. Given the experience with the very short time to stall for compressor-driven motors, this solution will not eliminate all events.
2. Controlled reactive power support. Generators and SVCs can provide controlled reactive power support to lessen the duration and severity of a delayed voltage recovery event.
3. Limit Impacted Load. Specifically design the system to section the load to limit its size in areas particularly vulnerable to FIDVR events. This should help contain the events.
4. Special Protection Schemes (Remedial Action Schemes). A transmission level protection scheme could be designed to contain the effect of a FIDVR event.
5. Under voltage load shedding
6. Energy Savings devices. Reducing the load could lower the risk of a FIDVR event.

In practice, generators and SVCs have been installed to mitigate these events. APS has installed generation in Phoenix, and plan to install SVCs. Southern Company has installed SVCs.

Further studies are needed to analyze the impact of these solutions. Experience and simulations suggest that reduced clearing times will not eliminate all events – the motors stall during faults. At the grid level, controlled reactive power support seem to be the most promising solution. Appropriate devices are expensive, however, and they may not be able to prevent the events, though significant reduction in impact should be expected. (See the Pourbeik presentation that includes a simulation with and without SVC or synchronous condenser support.[15])

Items 3-5 in the list above are intended to limit the scope of an event once it occurs. Item 3 is local, item 4 is at a higher level, and item 5 is offered as a measure to stop a fast-acting voltage disturbance from transitioning into a slow-acting voltage collapse. The NERC report notes that item 4 may actually be non-compliant with existing rules, and that this needs attention.

The last item may or may not improve the situation depending the nature of energy savings devices that are used.

In all cases, further study is needed to assess the success of any strategy. Most of the intuition used to consider such options follows balancing power and reactive power under FIDVR scenarios. For those solutions that quickly remove the stalled motors from service, or the feeders that serve them, one needs to be concerned about initiating dynamic instabilities. Detailed studies are needed to ensure there are no unintended consequences.

[15] P.Pourbeik, "Experience with A/C Stalliing Behavior and Modeling it for Power System Studies," DOE Workshop, April 22, 2008.

8.4 Conclusions and Recommendations

8.4.1 Conclusions

Fault Induced Delayed Voltage Recovery is a serious problem threatening the reliability of the electric power grid. Numerous events have already occurred, some with significant load loss. It is a challenging problem whose fundamental characteristics are driven by load behavior that is largely beyond the control of transmission operators. As pointed out in one presentation,[16] "Normally the 12 kV voltage is a slave to the transmission system voltage. However, due to stalled motors, the 12 kV voltage sags heavily and pulls the transmission system voltage lower."

8.4.2 Recommendations

The most effective solutions are those that can react at the site of the problem. These can also be the hardest to implement. Changes to air conditioner units to provide low voltage ride through would add additional manufacturing expense. Without standards with common requirements for all, manufacturers have a disincentive to implement such changes. Implementing new standards will take time, and even more time will pass before new units dominate the installed base. Digital thermostatic controls are promising; research and perhaps a pilot program should be put in place to determine their effectiveness. One could generalize the use of thermostatic controls to a more distributed use of technology to enable traditional customers to offer valuable grid support. Such efforts fall under the now popular title "smart grid." As such technologies advance, an eye towards FIDVR mitigation is warranted in those areas susceptible to events.

System level solutions focus on containing and mitigating events. Controlled reactive power sources are essential for this purpose. Studies to assess and quantify their effectiveness are needed. Long term monitoring of events in areas with new generators and SVCs will help determine the value of these resources, and guide additional protection as needed. Research programs for such monitoring and analysis should continue.

It is imperative that California investigates further the way to mitigate the A/C stalling to prevent the FIDVR events that can have a negative impact in the grid.

8.4.3 Benefits to California

California utilities are known to be susceptible to fault-induced delayed voltage recovery. This research improved the fundamental understanding of the phenomenon and the cooperative efforts to discuss the issue will help develop long-term measures to mitigate the problem. A specific benefit of such mitigation is to increase the likelihood that such events will be contained and not lead to widespread outage.

[16] B. Agrawal, "APS Experience," DOE Workshop, April 22, 2008.

CHAPTER 9:
Motor Protection

9.1 Introduction

Historically, loads in dynamic simulations have been very crudely modeled. The most common models are static functions that relate voltage and frequency to active and reactive powers. The two common voltage functions are exponential and polynomial. The latter is usually truncated at second order and is referred to as the "ZIP" model, where the letters represent impedance (electrical symbol Z), current (electrical symbol I) and power. Motor models have been available in simulation packages but were applied for special studies.

After the study of the 1996 blackout in the West, a necessary interim model was proposed (Pereira 2002) that included 20 percent induction motor load. The explicit incorporation of motor load was needed to match undamped oscillations that occurred during the event. Initially researchers applied a simpler load model and updated all other information about generators, generator controls, and network conditions. The model failed to capture the undamped oscillations until the load model was changed to include motor load.

The new WECC contains four explicit motor models representing high and low inertia motors, and two different mechanical load characteristics with regard to motor speed: constant torque and torque varying with speed squared. The motor models also allow one to specify voltage trip levels at which the motor will trip off-line. This simple representation for motor protection is disabled by default, but can be set by the user. The exception is the low inertia, constant torque performance model for air conditioners. This model has two protective elements modeled: undervoltage contactors and thermal protection. The thermal protection model is used to determine the amount of stalled air conditioners trip over time.

It is the delay in thermal protection that provides the delay in delayed voltage recovery. Since this characteristic proves critical for this type of motor load, it is reasonable to review motor protection in general to determine whether air conditions are special, or if other motor models should include more sophisticated representations for protection in simulation models.

9.2 Project Approach

In this preliminary white paper study, two primary sources of information are investigated: the air condition test data concerning their protection: contactors and thermal protection. This source provides first-hand details on the characteristics of these types of protection in this context. We also comment on how this information is represented a dynamic load model.

The second source is the National Electric Code (NEC 2002) maintained by the National Fire Protection Association. The NEC offers (advisory) standards for electrical installation that are often adopted by state or local laws. For the purposes of this study, it is expected that motor protection requirements appearing in the NEC are very likely to appear in practice. A review of the code will provide initial guidance into the forms of motor protection that could be included

in a load model. Further study may be warranted to determine the range of protection settings in practice – those exceeding code requirements, those that may not adhere to code, and, potentially, types of protection not mentioned in the NEC.

9.3 Project Results

9.3.1 Test Results

As part of this research project, and discussed in Chapter 2, extensive testing of air conditioner units were conducted at Southern California Edison and Bonneville Power Administration. This section focuses only on the results of those tests with respect to the protection equipment on the units.

Contactors

Contactors are undervoltage relays that shut down the compressor (remove its electrical source) when the voltage falls below some value. A plot of contactor voltage drop out is provided in Chapter 2 in Figure 9 (page 27) for the units tested at SCE. It is seen that the drop out voltage ranges from 35 percent to 55 percent. Researchers note that the action of the contactor depend also on the rate of change of voltage and suggest the model for a contactor shown below in Figure 37 (LMTF 2006).

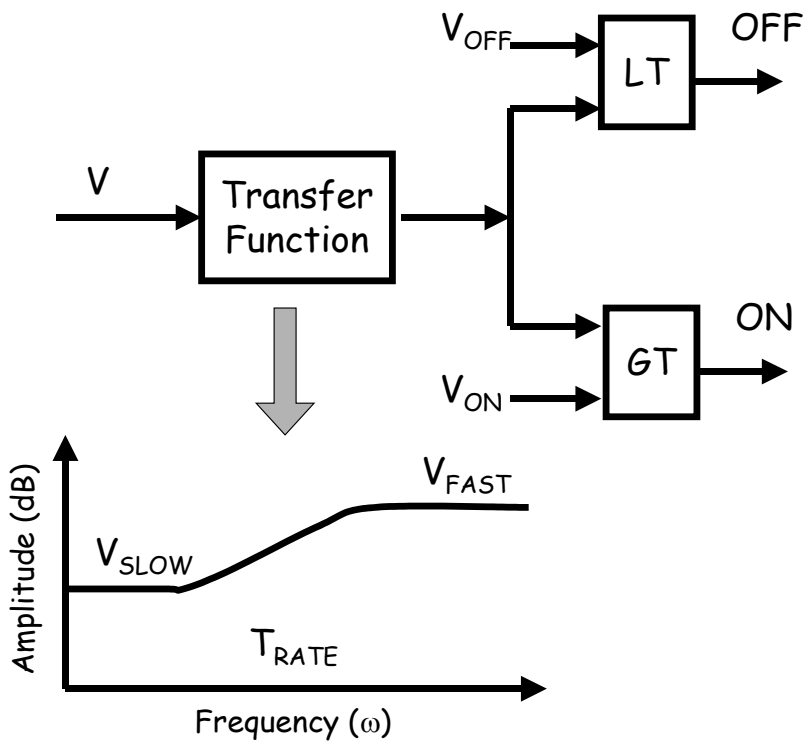

Figure 37 Contactor Model (LMTF 2006)

In the contactor model shown in Figure 37, different voltage thresholds may be specified for the tripping and reconnection, and the effect of rate of change of voltage is captured in the transfer function. In the tests researchers noted that the contactors operate quickly (2 cycles).

Thermal Protection

Thermal protection for the compressor motor is in place to protect the motor from overheating from excessive stall currents. In Chapter 2, Figure 8 (page 26) shows the experimental data for thermal protection operation as a function of stalled voltage. The higher the stall voltage, the higher the stall current and the quicker the thermal protection would operate.

This inverse relation between time delay in operation of thermal protection and stall current is typical for these protective devices. The higher the current the faster the operation. The inverse time characteristic for a sample room air-conditioner is presented below in Figure 38 (LMTF 2006).

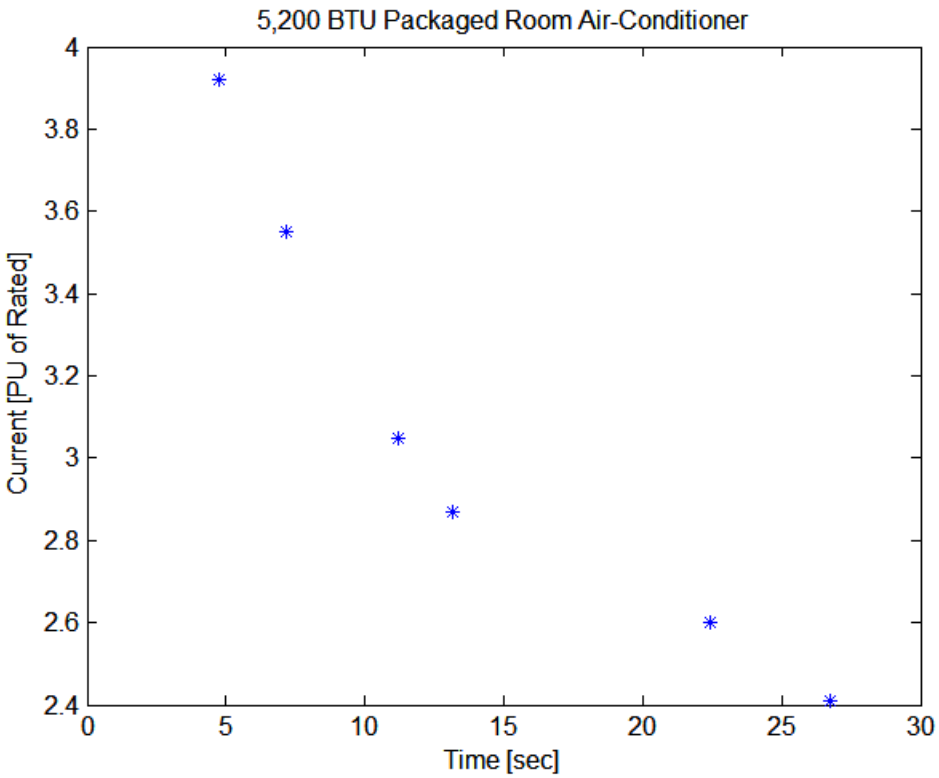

Figure 38 Thermal Relay Characteristic (LMTF 2006)

A block diagram model for a thermal relay is presented below in Figure 39 (LMTF 2006).

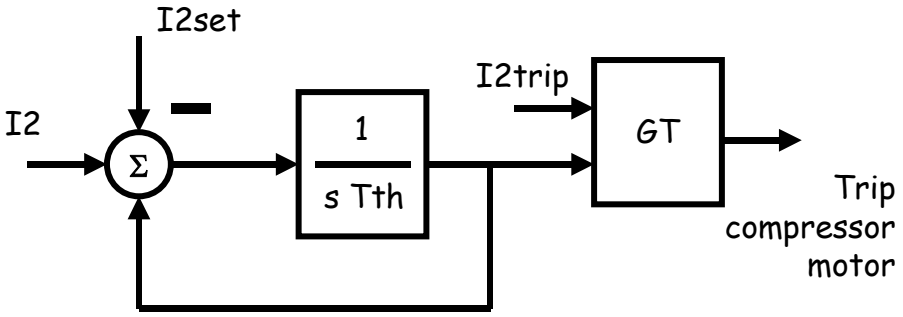

Figure 39 Thermal relay model (LMTF 2006)

The transfer function in Figure 39 delays the response in the operation of the thermal relay. The delay decreases with increased stall current.

It has been noted several times in this report that the delay in the thermal protection explains the delayed voltage recovery observed in practice. There is an initial delay before any unit trips offline. As units trip offline the voltage tends to rise (recover) with decreased load. The increased voltage yields higher stall current which in turn stress the remaining units to trip. The thermal relay model is useful as practical temporal model for approximating the percentage of units that trip.

9.3.2 National Electric Code

This section reviews relevant articles of the NEC pertaining to the protection of motor equipment. The 2002 NEC (NEC 2002) is used for this purpose. While there is a newer version of the NEC issued in 2008, the 2002 version is cited because its codes will be more relevant to the discussion of the existing range of motors that are currently in the field today.

Chapter 4 of the NEC, "Equipment in General Use," has three articles that are potentially relevant to motor protection for load modeling:

- Appliances – Article 422
- Motors, motor circuits, and controllers – Article 430
- Air conditioning and refrigerating equipment - Article 440

Appliances (422)

For motor-operated appliances, Article 422.11(G) specifies that overcurrent protection for motors must be in accordance with the overload protection specified Articles 430 and 440.

A mean must in place to disconnect an appliance. Generally for appliances, the means for disconnection involve switches, cord-and-plugs, and circuit breakers. The first two means do not involve automatic action and are not relevant for modeling loads, and the modeling of circuit breakers are not specific to motor models considered here.

Motors, motor circuits, and controllers (430)

In this examination of the code we focus on protection directly applied to motors. This article in the NEC also deals with motor circuits and their protection, and the protection of electric circuits that provide motor controls. For the purposes of load modeling we presume that the direct motor protection is important for modeling. That is, the circuits supplying the motor are properly sized so that protection of motor overload is local to the motor. This assumption, of course, may not always be true, but provides a basis to start modeling motor protection.

Various means of overload protection are possible depending on the size of motor, and its application. A distinction is made between continuous duty and intermittent duty applications. All applications are treated as continuous duty unless "the nature of the apparatus it drives is such that the motor cannot operate continuously with load under any condition of use." (NEC 2002, 430.33, p. 70-294.) For example, an elevator can be considered intermittent duty – its time serving load is necessarily bounded.

For continuous duty application, a distinction is made by motor rating. For motors rated above 1 horsepower, overload protection must be one of the following four types

1. Separate overload device that responds to current. The current trip rating should not exceed:
    a. 125 percent full load current for those motors marked with service factor 1.15 or above.
    b. 125 percent full load current for those motors marked with temperature rise of 40° C or less.
    c. 115 percent full load current for all other motors.
2. Thermal protector. The ultimate overload current should not exceed:
    a. 170 percent full load current when full load current is 9 amps or less
    b. 156 percent full load current for motors with full load current greater than 9 amps and less than or equal to 20 amps.
    c. 140 percent full load current for motors with full load current greater than 20 amps.
3. Integral with motor. A device that protects the motor against failure to start is allowed by the NEC provided "the motor is part of an approved assembly that does not normally subject the motor to overloads." (NEC 2002, 430.32 (A)(3), p. 70-293).
4. Larger than 1500 HP. These larger motors must have embedded temperature sensor that react when the temperature exceeds the nameplate temperature rise in ambient temperature of 40° C.

An exception to type 1 above is allowed if the motor requires greater amperage to start. In this case the three current trip ratings mentioned above for type 1 should not exceed 140 percent, 140 percent and 130 percent respectively.

Similar conditions are specified for motors with ratings lower than 1 horsepower. The details are omitted in this summary. Those listed above provide guidance for the types of protection may need to be considered for load modeling purposes, and specific default values that may considered for protection types 1 and 2 are provided.

Protection type 3 appears to be special to approved applications and may be treated that way in load models, or ignored as a first step toward typical load models. Protection types 2 and 4 are of the thermal overload type, with type 2 being discussed in the previous section with air conditioners. Type 4 pertains to large motors. It would be inconvenient to introduce simulations for temperature rise for these specific applications; it is likely that the current-based thermal protection model would be suitable for simulation purposes. Type 1 appears to be a protective device acting directly on current and could be easily modeled for those types of load that require it. Further research will be required to identify which typical load applications correspond to the typical protection.

Air Conditioning and Refrigeration Equipment (440)

This article of the NEC deals directly with hermetic refrigerant motor-compressor. Other configurations are handled by articles addressing appliances and motors. As with the general motor loads, for purposes of modeling protection, this summary focuses on the protection requirements for the motor-compressor, recognizing that additional protection is specified in code for connected circuitry. Further research might be warranted to investigate branch circuit requirements; here an assumption is applied that the first step in modeling motor protection is the protection closest to the motor.

Protection of the motor-compressor is specified in Article 440.52 (A) of the NEC. Protection for overload and failure to start should be provided by one of the following types:

1. A separate overload relay designed to trip at no more than 140 percent rated load current.
2. An integral thermal protector that prevents "dangerous overheating." This device must be able to operate a current interruption device to interrupt current on overload.
3. Fuse or inverse time circuit breaker. The current rating should not exceed 125 percent rated load current, and should have a time delay to allow the motor-compressor to start. This protection device can also serve as the branch circuit protection.
4. A protective system designed to protect against "dangerous overheating" and failure to start. This system must be able to operate a current-interrupting device.

Type 1 operates solely on current and is easily implemented in a simulation. Type 2 and type 3 can likely be modeled in a similar fashion for inclusion in a load model, such as presented in Figure 39. The description for Type 4 is vague; modeling would depend on the specific details of the protection system.

9.4 Conclusions and Recommendations

9.4.1 Conclusions

Both contactor and thermal protection are included in the single-phase air-conditioner model in the WECC composite load model. They have been tested in the laboratory and are understood for the purposes of load modeling.

The other three motor models in the WECC composite load model motor protection as a function of voltage. (These are disabled by default.) Two voltage levels with delay settings can be set along with a corresponding amount of motor load to trip. For each voltage trip level, a reconnection level with delay may also be set to restore motor load. No direct distinction is made between the operation of undervoltage contactors or motor overload.

The NEC clearly indicates the need for motors to be equipped with overload protection. (For small motors, this protection might be supplied by the circuit.) It is reasonable then to incorporate an overload protection model in the load model, although it is not entirely clear the best way to do this. For single-phase air conditioners there is an assumption in the models that if all air conditioners stall at a location, and this assumption is largely supported by the test in which all units stall quickly. For other motor loads, however, it is not obvious that they will all simultaneously overload under the same conditions. This issue needs consideration to see if any more sophisticated modeling will offer a better model the presently implemented model.

9.4.2 Recommendations

Further research is warranted to gather specific information on typical motor protection types by motor application, and WECC has initiated a project to do this. With this information, there remains the issue on how to best apply the features of protection in a load model. It is not uniformly applied in the motor models at present.

Overload protection is based on thermal or current characteristics. It is recommended that current-based thermal protection be used in motor models.

9.4.3 Benefit to California

The feature that drives the delayed voltage recovery phenomenon is related to thermal protection in air conditioner units. Proper modeling of this is already incorporated in the improved models discussed in this load modeling report. Similar testing and knowledge of protective action for other motor applications is lacking and not currently modeled in our test systems. This potentially could lead to surprises in operation if motor overload operation were to occur but was not modeled in the dynamic models used in simulation.

Better models for motor protection will benefit California by increasing the confidence in operational planning studies as well as providing knowledge that will help operators understand the impact of motor protection operation when it occurs.

REFERENCES

Azmy, A.M., and I. Erlich. 2004. "Identification of dynamic equivalents for distribution power networks using recurrent ANNs" Power Systems Conference and Exposition, 2004. IEEE PES, vol., no., pp. 348-353 vol.1, 10-13 Oct. 2004

Blackburn, J.L. 1998. Protective Relaying Principles and Applications, Marcel Dekker, New York, 2nd edition.

Bletterie, B., R. Brundlinger, and H. Fechner. 2005. "Sensitivity of photovoltaic inverters to voltage sags-test results for a set of commercial products" , IEE Conf. Pub. 2005, v2-67 (2005)

Boemer, J.C., M. Gibescu, and W.L. Kling. 2009. "Dynamic models for transient stability analysis of transmission and distribution systems with distributed generation: An overview" PowerTech, 2009 IEEE Bucharest, vol., no., pp.1-8, June 28 2009-July 2 2009

Bravo, R. 2009. Inverter Test Procedures Solar Generation Impact Study Private e-mail communication, 22 Dec 2009.

Canova, A., L. Giaccone, F. Spertino, and M. Tartaglia. 2009. "Electrical Impact of Photovoltaic Plant in Distributed Network," Industry Applications, IEEE Transactions on , vol.45, no.1, pp.341-347, Jan.-feb. 2009.

Feehery, W.F., J.E. Tolsma, and P.I. Barton. 1997. "Efficient sensitivity analysis of large-scale differential-algebraic systems," Applied Numerical Mathematics, vol. 25, pp. 41–54, 1997.

Frank, P.M. 1978. *Introduction to System Sensitivity Theory*, Academic Press, New York, 1978.

Gaikwad, A.M., R.J. Bravo, D. Kosterev, S. Yang, A. Maitra, P. Pourbeik, B. Agrawal, R. Ying, and D. Brooks. 2008. "Results of Residential Air Conditioner Testing in WECC," IEEE Power Engineering Society General Meeting, 20-24 July, 2008.

Hiskens, I.A., M.A. Pai, and T.B. Nguyen. 1999. "Dynamic contingency analysis studies for inter-area transfers," in *Proceedings of 13th Power Systems Computation Conference*, Trondhein, Norway, June 1999.

Hiskens, I.A., and M.A. Pai. 2000 "Trajectory sensitivity analysis of hybrid systems," *IEE*E *Transactions on Circuits and Systems I: Fundamental Theory and Applications*, vol. 47, no. 2, pp. 204–220, February 2000.

Hiskens, I.A. 2001. "Nonlinear dynamic model evaluation from disturbance measurements," *IEEE Transactions on Power Systems*, vol. 16, no. 4, pp. 702–710, November 2001.

Hiskens, I.A. 2004. "Power system modeling for inverse problems," *IEEE Transactions on Circuits and Systems I: Regular Papers*, vol. 51, no. 3, pp. 539–551, March 2004.

Hiskens I.A., and J. Alseddiqui. 2006. "Sensitivity, approximation and uncertainty in power system dynamic simulation," *IEEE Transactions on Power Systems*, vol. 21, no. 4, November 2006.

IEEE Std 421.5-1992. 1992. *IEEE Recommended Practice for Excitation System Models for Power System Stability Studies*, Institute of Electrical and Electronics Engineers, Inc., New York, 1992.

IEEE Task Force on Load Representation for Dynamic Performance. 1993. "Load Representation for Dynamic Performance Analysis." *IEEE Transactions on Power Systems*, vol.8, no.2, (1993): 472-482.

IEEE Task Force on Load Representation for Dynamic Performance. 1995. "Standard Models for Power Flow and Dynamic Performance Simulation." *IEEE Transactions on Power Systems*, vol.10, no.3, (1995): 1302-1313.

International Energy Agency (IEA). 2008. Trends in Photovoltaic Applications Survey report of selected IEA countries between 1992 and 2007, International Energy Agency Report, 2008

Kosterev, D., A. Meklin, J. Undrill, B. Lesieutre, W. Price, D. Chassin, R. Bravo, and S. Yang. 2008. "Load modeling in power system studies: WECC progress update." *2008 IEEE Power and Energy Society General Meeting - Conversion and Delivery of Electrical Energy in the 21st Century*, 20-24. (2008): 1-8.

Kunte, R.S.; W. Gao, 2008. "Comparison and review of islanding detection techniques for distributed energy resources," Power Symposium, 2008. NAPS '08. 40th North American , vol., no., pp.1-8, 28-30 Sept. 2008

Li, S., L. Petzold, and W. Zhu. 2000. "Sensitivity analysis of differential-algebraic equations: A comparison of methods on a special problem," *Applied Numerical Mathematics*, vol. 32, no. 8, pp. 161–174, 2000.

LMTF. 2006. Residential Single-Phase Air Conditioner Modeling, WECC Load Modeling Task Force white paper, October 2006.

Lu, N., B. Yang, Z Huang, and R. Bravo. 2009. "The System Impact of Air Conditioner Under-voltage Protection Schemes," Power System Conference and Exposition, 15-18 March, 2009.

NERC. 2008. Fault-Induced Delayed Voltage Recovery, NERC Transmission Issues Subcommitte Technical Reference Paper, December 2008.

Nguyen, T.B., M.A. Pai, and I.A. Hiskens. 2002. "Sensitivity approaches for direct computation of critical parameters in a power system," *International Journal of Electrical Power and Energy Systems*, vol. 24, pp. 337–343, 2002.

Nocedal, J., and S.J. Wright, 1999. *Numerical Optimization*, Springer-Verlag, New York, 1999.

Nozari, F.; M.D. Kankam, W.W. Price. 1987. "Aggregation of Induction Motors for Transient Stability Load Modeling," Power Systems, IEEE Transactions on , vol.2, no.4, pp.1096-1103, Nov. 1987

NREL. U.S. Department of energy, National Renewable Energy Laboratory. http://www.nrel.gov/gis/solar.html.

Pai, M.A. 1989. *Energy Function Analysis for Power System Stability*, Kluwer Academic Publishers, Boston, MA, 1989.

Pal, M.K. 1997. Discussion of "Air Conditioner Response to Transmission Faults." ," IEEE Transactions on Power Systems, Vol. 12, No 2, May 1997.

Papanikolaou, N.P., E.C. Tatakis, A.C. Kyritsis. 2009. "Analytical model for PV — Distributed generators, suitable for power systems studies" Power Electronics and Applications, 2009. EPE'09. 13th European Conference on, vol., no., pp.1-10, 8-10 Sept. 2009.

Pereira, L., D. Kosterev, P. Mackin, D. Davies, J. Undrill, and W. Zhu. 2002. "An Interim Dynamic Induction Motor Model for Stability Studies in WSCC." *IEEE Transactions on Power Systems*, vol.17, no.4, (2002): 1108-1115.

Picault, D., B. Raison, and S. Bacha. 2009. "Guidelines for evaluating grid connected PV system topologies," Industrial Technology, 2009. ICIT 2009. IEEE International Conference on , vol., no., pp.1-5, 10-13 Feb. 2009

PVGIS. European Commission, Joint Research Centre, Photovoltaic Geographical Information System. http://re.jrc.ec.europa.eu/pvgis.

Price, W.W., K.A. Wirgau, A. Murdoch, J.V. Mitsche, E. Vaahedi, M. El-Kady. 1988. "Load modeling for power flow and transient stability computer studies," Power Systems, IEEE Transactions on , vol.3, no.1, pp.180-187, Feb 1988

Pourbeik, P., A. Maitra, A. Gaikwad, and D. Brooks. 2007. "Developing a Bulk System Load Model in GE PSLF TM for Investigating the Valley Delayed Voltage Recovery Events", December 2, 2007, report issued by EPRI under SCE contract.

Reza, M., J.G. Slootweg, P.H. Schavemaker, W.L. Kling, and L. van der Sluis. 2003. "Investigating impacts of distributed generation on transmission system stability," Power Tech Conference Proceedings, 2003 IEEE Bologna , vol.2, no., pp. 7 pp. Vol.2-, 23-26 June 2003.

Salas, V., P.J.Debora, and E. Olias. 2009. "Field analysis of commercial PV inverters in the 5 kW power range with respect to MPPT effectively," Power Electronics and Applications, 2009. EPE '09. 13th European Conference on , vol., no., pp.1-7, 8-10 Sept. 2009

Scheuermann, K., D. Boleyn, P. Lilly, and S. Miller. 2004. "Measured Performance of California Buydown Program Residential PV Systems", California Energy Commission, Consultant Report, 2004

Shaffer, J.W. 1997. "Air Conditioner Response to Transmission Faults," IEEE Transactions on Power Systems, Vol. 12, No 2, May 1997.

Sauer, P.W., and M.A. Pai. 1998. *Power System Dynamics and Stability*, Prentice Hall, Upper Saddle River, NJ, 1998.

SourceForge.net. http://sourceforge.net/projects/gridlab-d/files/load-composition/.

Thomson, M., and D.G. Infield, D.G. 2007. "Impact of widespread photovoltaics generation on distribution systems" Renewable Power Generation, IET, vol.1, no.1, pp.33-40, March 2007

Thong, V.V., J. Driesen, and R. Belmans. 2007. "Transmission system operation concerns with high penetration level of distributed generation," Universities Power Engineering Conference, 2007. UPEC 2007. 42nd International , vol., no., pp.867-871, 4-6 Sept. 2007

Wang, F., C. Zhang; and Z. Mi. 2009. "Anti-islanding Detection and Protection for Grid Connected PV System Using Instantaneous Power Theory," Industrial and Information Systems, 2009. IIS '09. International Conference on , vol., no., pp.413-416, 24-25 April 2009.

Wang Y.-B.; C.-S. Wu, H. Liao, andH.-H. Xu. 2008. "Steady-state model and power flow analysis of grid-connected photovoltaic power system" Industrial Technology, 2008. ICIT 2008. IEEE International Conference on, vol., no., pp.1-6, 21-24 April 2008.

Williams, B.R., W.R. Schmus, and D.C. Dawson. 1992. "Transmission Voltage Recovery Delayed by Stalled Air Conditioner Compressors," IEEE Transactions on Power Systems, Vol. 7, No. 3, August 1992.

Yazdani, A., A. Difazio, H. Ghoddami, M. Russo, M. Kazerani, and K. Strunz. 2009. "A General Discussion on Modeling and Simulation of Three-Phase Single-Stage Grid-Connected PhotoVoltaic (PV) Systems", Paper presented at IEEE PES General Meeting, July 2009.

Yun Tiam Tan; D.S. Kirschen, N. Jenkins. 2004. "A model of PV generation suitable for stability analysis," Energy Conversion, IEEE Transactions on , vol.19, no.4, pp. 748-755, Dec. 2004

GLOSSARY

AVR	Automatic Voltage Regulator
BPA	Bonneville Power Administration
CSP	Concentrated Solar Power
DFR	Digital Fault Recorder
DG	Distributed Generation
DSM	Disturbance Management System
DMWG	Disturbance Monitoring Working Group
DOE	Department of Energy
EPRI	Electric Power Research Institute
FIDVR	Fault-Induced Delayed Voltage Recovery
ICLSS	Import Contingency Load Scheduling Scheme
IEEE	Institute of Electrical and Electronic Engineers
IPC	Idaho Power Company
LBNL	Lawrence Berkeley National Laboratory
LMTF	Load Modeling Task Force
MPPT	Maximum Power Point Tracking
MVWG	Modeling and Validation Working Group
NEC	National Electric Code
NERC	North American Electric Reliability Council
NREL	National Renewable Energy Laboratory
PGE	Pacific Gas and Electric
PIER	Public Interest Energy Research
PMU	Phasor Measurement Unit
PNNL	Pacific Northwest National Laboratory
PPSM	Portable Power System Monitor
PSE	Puget Sound Energy
PSLF	Positive Sequence Load Flow

PSS	Power System Stabilizer
PV	Photovoltaic
PVGIS	Photovoltaic Geographical Information System
SCADA	Supervisory Control And Data Acquisition
SCE	Southern California Edison
SEER	Seasonal Energy Efficiency Ratio
SVC	Static Var Compensator
TXV	Thermostatic Expansion Valve
VAR	Volt-Ampere Reactive
WECC	Western Electricity Coordinating Council