Energy Research and Development Division
FINAL PROJECT REPORT

GAS COOLING SCOPING STUDY RESULTS

Prepared for: California Energy Commission
Prepared by: Pacific Gas and Electric Company

MARCH 2010
CEC-500-2013-154

PREPARED BY:

Primary Author(s):
Charlene Spoor
Ken Gillespie
Sam Ramon

Pacific Gas and Electric Company

Contract Number: 500-06-023

Prepared for:

California Energy Commission

Brad Meister
Contract Manager

Virginia Lew
Office Manager
Energy Efficiency Research Office

Laurie ten Hope
Deputy Director
ENERGY RESEARCH AND DEVELOPMENT DIVISION

Robert P. Oglesby
Executive Director

DISCLAIMER

This report was prepared as the result of work sponsored by the California Energy Commission. It does not necessarily represent the views of the Energy Commission, its employees or the State of California. The Energy Commission, the State of California, its employees, contractors and subcontractors make no warranty, express or implied, and assume no legal liability for the information in this report; nor does any party represent that the uses of this information will not infringe upon privately owned rights. This report has not been approved or disapproved by the California Energy Commission nor has the California Energy Commission passed upon the accuracy or adequacy of the information in this report.

ACKNOWLEDGEMENTS

We would like to express our thanks to following individuals for their significant contribution to this project.

- Jason Glazer, GARD Analytics, Arlington Height, IL, Lead investigator and principle author of interim project reports
- Dharam Punwani, Avalon Consulting, Naperville, IL, Consultant and lead investigator of the customer issues study
- Dr. T. Agami Reddy, SAM Associates, Scottsdale, AZ, Consultant
- Benjamin Taylor, Pacific Gas & Electric, San Ramon, CA, Technical editor of final report

PREFACE

The California Energy Commission Energy Research and Development Division supports public interest energy research and development that will help improve the quality of life in California by bringing environmentally safe, affordable, and reliable energy services and products to the marketplace.

The Energy Research and Development Division conducts public interest research, development, and demonstration (RD&D) projects to benefit California.

The Energy Research and Development Division strives to conduct the most promising public interest energy research by partnering with RD&D entities, including individuals, businesses, utilities, and public or private research institutions.

Energy Research and Development Division funding efforts are focused on the following RD&D program areas:

- Buildings End-Use Energy Efficiency
- Energy Innovations Small Grants
- Energy-Related Environmental Research
- Energy Systems Integration
- Environmentally Preferred Advanced Generation
- Industrial/Agricultural/Water End-Use Energy Efficiency
- Renewable Energy Technologies
- Transportation

Gas Cooling Scoping Study Results is the final report for the Gas Cooling Scoping Study project (contract number 500-06-023) conducted by Pacific Gas and Electric Company. The information from this project contributes to Energy Research and Development Division's Buildings End-Use Energy Efficiency Program.

For more information about the Energy Research and Development Division, please visit the Energy Commission's website at www.energy.ca.gov/research/ or contact the Energy Commission at 916-327-1551.

ABSTRACT

The Pacific Gas and Electric Company's CoolTools™ project was initiated in 1997 to provide an integrated set of tools and application guidelines for design and operation of energy efficient chilled water plants. The project results included a chilled water plant design and specification guide; a tool to generate modeling coefficients for electric chillers, called ECMod; and a tool to generate modeling coefficients for gas engine-driven and thermally-fired chillers, called GasMod.

Pacific Gas and Electric was asked to update its design and specification guide and support tools in 2004 to integrate gas-driven and thermally-fired chillers into these products. The goal of the study discussed in this report was to provide up-to-date, "best practice" information that could be used to support future updates of these design and specification guides and support tools. This study incorporated information on engine-driven and thermally-fired chillers and resulted in a configurations guide, a decision process, a list of best practices, areas of improvement and future research opportunities. This information should prove useful to designers of new chilled water plants, operators of existing plants, and could serve as the basis for the development of an in-depth design guide.

Keywords: Cooling, chillers, absorption cooling, engine driven, thermally fired, CoolTools™, Chiller Assessment Program

Please use the following citation for this report:

Spoor, Charlene; Ken Gillespie; Sam Ramon. (Pacific Gas and Electric). 2010. ***Gas Cooling Scoping Study Results.*** California Energy Commission. Publication number: CEC-500-2013-154.

TABLE OF CONTENTS

Acknowledgements ..... **i**

PREFACE ..... **ii**

ABSTRACT ..... **iii**

TABLE OF CONTENTS ..... **iv**

LIST OF FIGURES ..... **vi**

EXECUTIVE SUMMARY **7**

Introduction 7

Project Purpose 7

Project Results 7

Project Benefits 9

CHAPTER 1: Introduction **11**

1.1 Background and Overview 11

1.1.1 Project Purpose 12

CHAPTER 2: Project Approach **13**

2.1 Application 13

2.1.1 Configurations 13

2.1.2 Process Diagram 13

2.1.3 Best Practices 14

2.1.4 Customer Issues 14

2.1.5 Research Plan 15

CHAPTER 3: Application Summary **17**

3.1 Summary of Reasons 17

3.1.1 Simplification of the Plant 18

CHAPTER 4: Gas Cooling Configurations **20**

4.1 Chillers in Series with Microturbine (Figure 1) 20

4.2 Chillers in Parallel with Boiler (Figure 2) 22

4.3 Sidestream Absorber (Figure 3) 24

4.4 Absorption Chiller/Heater (Figure 4) 26
4.5 Engine Chiller with Heat Recovery (Figure 5) 29
4.6 Turbine with Open Centrifugal Chiller (Figure 6) 31
4.7 Chillers in Series with Chilled Water Storage (Figure 7) 34
4.8 Absorption Priority Piping (Figure 8) 36
4.9 Engine Driven Ammonia Chiller (Figure 9) 38
CHAPTER 5: Decision Process Diagram 42
CHAPTER 6: Best Practices 52
6.1 Design Best Practices 52
6.1.1 Selection of Gas and Thermal Chillers 52
6.2 Operation Best Practices 57
6.2.1 Recommended Maintenance to Prolong Life of Engine Chillers 57
CHAPTER 7: Areas of Improvement 62
CHAPTER 8: Conclusions and Recommendations 63
8.1 Conclusions 63
8.1.1 Research and Development Guide 63
8.1.2 Overall Efficiency Metrics for Building Plants with Power Generation, Heat Recovery, and Absorption Chillers 64
8.1.3 Enhance Simulation Tools for Complex Engine and Absorption Chiller Configurations 66
8.1.4 Control Options for Absorption Chillers in Central Chilled Water Plants 67
8.1.5 Fault Detection and Diagnosis Models for Absorption and Engine Chillers with Maintenance Procedure Development 69
8.1.7 Create Functional Performance Tests for Absorption and Engine Chiller Installations 70
8.1.8 Final Outreach Plan 71
APPENDIX A: Existing Programs A-1
APPENDIX B: Gas Cooling Design Process B-1
APPENDIX C: Survey for Design and Operation of Gas and Thermal Chillers C-1
APPENDIX D: Customer Issues Survey D-1

APPENDIX E: Complete List of Research Opportunities E-1

APPENDIX F: Additional References on Optimal Plant Control F-1

APPENDIX G: Current Gas Cooling Applications G-1

APPENDIX H: Organization Web Site Search for Efficiency Programs H-1

LIST OF FIGURES

Figure 1: Chillers in Series with Microturbine 22
Figure 2: Chillers in Parallel with Boiler 24
Figure 3: Sidestream Absorber 26
Figure 4: Absorption Chiller/Heater 28
Figure 5: Engine Chiller with Heat Recovery 31
Figure 6: Turbine with Open Centrifugal Chiller 34
Figure 7: Chiller in Series with Chilled Water Storage 36
Figure 8: Absorption Priority Piping 38
Figure 9: Engine Driven Ammonia Chiller 41
Figure 10: Decision Process Diagram Page 1 43
Figure 11: Decision Process Diagram Page 2 46
Figure 12: Decision Process Diagram Page 3 48
Figure 13: Decision Process Diagram Page 4 49
Figure 14: Decision Process Diagram Page 5 51

EXECUTIVE SUMMARY

Introduction

Pacific Gas and Electric Company's (PG&E) CoolTools^{TM} project was initiated in 1997 with the goal of providing an integrated set of tools and application guidelines for design and operation of energy efficient chilled water plants. Three major components of the project were:

- A chilled water plant design and specification guide.
- A tool to generate modeling coefficients for electric chillers, called ECMod.
- A tool to generate modeling coefficients for gas engine-driven and thermally-fired chillers, called GasMod.

The guide was completed in May 2000 and addressed design issues such as selection of equipment, controls and a myriad of other performance critical issues. It also included a section of performance specifications that was targeted at equipment specifiers, including engineers and facility purchasing agents. It detailed methods for requesting and analyzing the performance data of submitted equipment.

The GasMod development effort included a detailed plan, manufacturer's data, field test information and algorithms for hourly simulation of engine-driven and absorption chillers. Efforts to develop a tool were initiated but were never completed.

The Chiller Assessment Program was initiated in 2000 after the CoolTools Project ended. The results of the program included development of a number of control optimization strategies for chilled water plants with electric chillers.

Architectural Engineering Firm and Taylor Engineering proposed that PG&E update its design and specification guide and support tools in 2004. They recommended that gas driven and thermally fired chillers be integrated into these products. An Electricity Commission PIER project was proposed to investigate and document the most current and best practices regarding design and specification of gas-driven and thermally-fired chillers.

Project Purpose

The primary purpose of this study was to assemble and make available as much information as possible to assist in best-practice design and operation of gas engine-driven and thermally-fired chillers. The two objectives of this study were: (1) to increase the number of choices that design professionals had for providing owners with cost-effective chilled water systems that reduced peak electric demand; and (2) to generate sufficient information such that gas engine-driven and thermally-fired chiller equipment could be added to future chilled water plant design and specification guides.

Project Results

Information collected during this scoping study included:

- A detailed annotated bibliography.
- Reasons for utilizing engine-driven or thermally-fired chiller equipment.
- Examples of existing facilities that incorporate either a gas engine-driven or thermally-fired chiller.
- Common configurations.
- A decision process to determine whether or not gas cooling was a viable option.
- A list of best practices for design and operation of chilled water plants with gas engine-driven or thermally-fired chillers
- Suggested improvements based on customer feedback.
- A research guide to direct research and development (R&D) efforts.

The results of the scoping study served several purposes. The decision process could assist designers in the initial stages of development in the type of chilled water plant to pursue. The best practice guide was a useful tool for designers and operators of chilled water plants. It provided additional guidance to designers considering gas engine-driven or thermally-fired chillers in their design. Customer issues with current systems led to a thorough analysis of possible improvements to these chilled water systems. The research and development guide prioritized areas of improvement to increase the economic viability of these systems.

Primary recommendations from this scoping study stemmed from the analysis of future research potential. Five main categories were created from a list of 25 areas for potential research:

- Overall efficiency metrics for building plants with power generation, heat recovery and absorption chillers.
- Enhanced simulation tools for complex engine and absorption chiller configurations.
- Control options for absorption chillers in central chilled water plants.
- Fault detection and diagnosis models for absorption and engine chillers with maintenance procedure development.
- Functional performance tests for absorption and engine chiller installations.

In addition, an information dissemination plan was created to facilitate integration of the project results into appropriate existing energy efficiency programs and resources. The report could be sent directly to select individuals via email. Public distribution could be accomplished by creating a web page containing the report's information. A follow up email to the specific recipients of the report should encourage them to share the web page link with others.

Project Benefits

The information in this study should prove useful to designers of new chilled water plants and operators of existing plants, and could serve as the basis for the development of an in-depth design guide.

CHAPTER 1: Introduction

1.1 Background and Overview

In 1997 PG&E began a programmatic approach to developing best practice set of integrated set of tools and application guidelines for design and operation of energy efficient chilled water plants. They were intended to inform owners, design professionals, and operators about achieving the most cost-effective and efficient equipment selection, system design, and operating scenarios for new construction and retrofit applications. This project is called CoolTools™. Three project components of note included the development of: a chilled water plant design and specification guide; a tool (ECMod) to generate modeling coefficients for electric chillers; and a tool (GasMod) to generate modeling coefficients of gas engine-driven and thermally-fired chillers.

The guide was completed in May of 2000. It is targeted to a technical design audience. It includes design issues such as selection of coils, application of different piping distribution systems, design and application of controls, mitigation of low delta-T syndrome, and a myriad of other performance critical issues. It also includes a section of performance specifications, which is targeted to equipment specifiers, including engineers and facility purchasing agents. It details methods to request and analyze the performance data of submitted equipment. Topics include zero-tolerance performance specifications, applications of witness tests, and start-up and commissioning.

The GasMod project covered the integration of absorption and engine-driven chiller manufacturers and filed test data with hourly simulation tools. The report includes a detailed plan, manufacturer's data, field test information, algorithms for hourly simulation of engine-driven and absorption chillers. The GasMod final report, completed in May 2000, combines all reports generated during the GasMod development effort in 1998 to 2000 calendar years. Efforts to develop a tool were initiated, but it was never completed.

Subsequent to the ending of the CoolTools Project in 2000, PG&E undertook a project to evaluate potential low cost options to optimize performance of existing chilled water plants. This project was called the Chiller Assessment Program (CAP). The outcome of CAP was the development of a number of control optimization strategies for chilled water plants with electric chillers. Taylor Engineering, LLC, with permission from PG&E, has utilized the information developed in CoolTools™ and CAP in professional development seminars for ASHRAE.

In 2004 it was proposed by Architectural Energy Corporation and Taylor Engineering that PG&E update the design and specification guide and support tools and post them on www.energydesignresources.com. The work included updating the guide and tool with the optimization strategies developed by Taylor Engineering as part of PG&E's CAP project. This work has recently been completed. It was proposed that a similar effort be undertaken for gas cooling.

Combined heat and power systems are regularly discussed in the literature as an energy and demand reduction strategy and the Southern California Gas Company provides support for such projects. Given that the availability of natural gas supply in the future is problematic and that it is uncertain as to what the real benefits of gas cooling will be as a demand side management strategy, the California Energy Commission has recently completed a project to evaluate the California market for combined heat and power systems (Contract# 500-01-025).

A market study commissioned by the Southern California Gas Company in March 2000 indicated that there was a potential of capturing 1.4 percent market share in both new and replacement installations that use gas cooling. However, before any new design guide development is undertaken, it was recognized that a project needed to be implemented by CEC PIER to identify those design related issues for which we may not have sufficient information to complete the design guide, or that need further investigation.

1.1.1 Project Purpose

Under the auspices of CEC PIER, this research is a scoping study to investigate the issues required to evaluate, design and operate chilled water plants that include gas engine-driven or thermally-fired chillers. This research will attempt to connect to near term market applications and identify any research gaps.

The goal of this work is to increase the number of choices that design professionals have in providing owners with cost effective chilled water systems while reducing peak electric demand. It will do this by delineating the information and tools required to fairly compare electric, gas engine-driven and thermally-fired alternatives.

The objective of this work is to generate sufficient information such that gas engine-driven and thermally-fired chiller equipment can be added to future chilled water plant design and specification guides, in order to help drive effective and successful utilization of these systems.

CHAPTER 2:
Project Approach

Each portion of the report required its own approach to gather sufficient information. The following summarizes the approach for each primary section.

2.1 Application

The first step was to gather a list of example buildings that use gas cooling in a chilled water plant. Two different sources were used:

- Literature from the annotated bibliography
- Web search

The literature gathered for the bibliography was reviewed, looking for practical applications of engine-driven and absorption chillers. While many of the references discussed gas cooling and had specific details on which types of buildings would be good applications, they were often based on models or judgment, and a low percentage of the publications contained actual examples. Even with this, a large number of case studies were found in the literature from the annotated bibliography.

The richest source of information on actual buildings came from the American Gas Cooling Center. Their publications referenced a large number of individual buildings. Altogether, the American Gas Cooling Center had almost 300 individual buildings described using two page summaries. The actual buildings from the American Gas Cooling Center list included both chilled water applications as well as packaged cooling and desiccant systems. For this project only the chilled water applications were examined.

2.1.1 Configurations

The Application Summary was used to initially populate the list of configurations and options. In addition, design guides and other promising items found from the bibliography were reviewed for configurations or configuration options.

2.1.2 Process Diagram

Multiple steps were taken to arrive at the process diagram shown in Appendix B.

- A list of questions was created that an engineer might consider in the process of making decisions about the cooling plant. The list was categorized and the questions grouped by category.
- Flowcharts from other related decision processes were reviewed such as Oland (2004) page 148 and Midwest CHP Application Center & Avalon Consulting (2003) pages 33 and 34.

- Review of the list of questions and other flowcharts by the PG&E Technical Project Manager and technical consultants was conducted including a conference call.
- Prepared a draft process diagram suitable for review by experts in the design of chilled water plants that include absorption or engine-driven chillers.
- Gathered a list of possible reviewers based on citations in the literature, firsthand knowledge of designers, and recommendations from others. Twenty-nine reviewers were identified.
- Distributed the draft process diagram and received feedback. Feedback was received from nine reviewers, about a one-third response rate including six extensive email comments and three phone interviews.
- Finalized the process diagram incorporating comments.

2.1.3 Best Practices

Both a survey and a literature review were performed to assemble the list of best practices. The literature review was based on reviewing all literature gathered for the project and skimming each document for ideas on best practices and for the other remaining deliverables. The literature reviewed included other sections in the project.

A survey instrument was developed with open ended questions designed to encourage extended responses instead of short answers. A draft of the survey was provided to PG&E and the other consultants on the project for feedback. The feedback was incorporated into survey which was distributed in late March, 2009, to the 28 people previously contacted to help review the decision process diagram developed in an earlier task. The 28 people primarily represented mechanical engineers and designers rather than building operators but it was hoped that their interaction with building operators would help when responding to those questions. Of the 28 surveys sent, seven responses were received. The survey is shown in Appendix C of this report.

2.1.4 Customer Issues

The following approach was used to obtain customer issues. Answers to these questions were used to create the list of possible areas of research:

- Developed a draft list of questions that could be answered by the engineers, supervisors, managers, or directors of the facilities that are currently using natural gas-fired or thermally-activated chillers in chilled water central plants.
- Submitted the draft list of questions for review by PG&E and their two subcontractors: GARD Analytics and Dr. Agami Reddy.
- Finalized the list of questions for the current gas cooling customers after incorporating the suggestions of the reviewers.
- Reviewed the databases of the American Gas Cooling Center and those of the eight CHP Application Centers of the U.S. Department of Energy (DOE),

Energy Solution Center and the Web sites of gas cooling equipment manufacturers.

Suggested, discussed with PG&E, and agreed upon the criteria for selecting gas cooling customers for interviews. The selection criteria included the following:

- Most of these customers should be in California (No more than one customer to be outside California).
- Most of the interview targets for gas cooling should be independent of CHP systems.
- The selected target facilities should represent the major gas cooling market targets, such as healthcare, colleges and universities, and office buildings.
- The selected target facilities should cover the full range of gas cooling technologies: a) natural gas-fired and steam-heated absorption chillers, b) gas engine-driven chillers, and c) steam turbine-driven chillers.
- Customers' gas cooling equipment should not be very old (<15 years old in order to avoid customer issues that might have already been addressed by the gas cooling equipment manufacturers) nor very new (< less than 2 years in order to make sure they had acquired at least two cooling season's experience with gas cooling equipment).

Suggested interview targets that meet the selection criteria and received concurrence of PG&E and its other two subcontractors.

- Identified the key personnel, and the relevant contact information, to be contacted at the customers' facility for interview or responding to our questionnaire to be followed by an interview.
- Drafted cover letters for each interviewee and sent the letter and the questionnaire by e-mail with request for phone interview or providing written answers to the questionnaire.
- Sent weekly e-mail and/or phone reminders to the interviewees.
- After receiving the customer responses, they were contacted for clarification of some of the responses or about the questions not responded.

2.1.5 Research Plan

A literature review was performed to assemble the list of research and development ideas. The literature review was based on reviewing all literature gathered for the project and skimming each document for ideas on research and development. In addition, previous deliverables were reviewed to examine where gaps of information in the design and use of thermal chillers exist. The List of Customer Issues Summary Report (deliverable 4c) provided a number of additional ideas directly from current gas and

thermal chiller customers and those ideas are shown with the reference to Punwani 2009 and a reference to the item number in the summary of responses and issues.

CHAPTER 3:
Application Summary

The primary reason for gas and thermally driven chiller installation was energy cost savings. In recent years, with the rise in price in natural gas, it is not clear if the energy cost savings would be as significant. This would likely shift the reasons to install these chillers today away from energy cost savings.

3.1 Summary of Reasons

Additional reasons include fulfilling philosophical objects such as the following:

- Increase source energy efficiency
- Conservation of energy
- Reduction in source energy use
- Reducing dependency on the electric supply
- Reducing emissions including indirect emissions
- Avoiding environmental impact from power plant operation
- Avoiding adding more pollutants to the environment
- No use of HCFCs in absorption chiller
- Avoid chillers with CFCs
- To stay ahead of air quality standards
- Environmentally friendly
- Concern about electrical energy prices due to deregulation
- To make demand for natural gas more level
- Reduction in summer peak demand
- Increased employee satisfaction with their environment

Other reasons cited depended on the specific installation and constraints or benefits due to installing natural gas or thermally driven chillers:

- Availability of district steam
- Good reliability of absorption chillers
- Availability of waste heat from generators
- In a hybrid plant with electric chillers, the choice of chiller to operate to minimize costs

- Utility rebates providing lower first cost investment
- Maintaining precise water temperature with fluctuating load due to modulation of engine-chiller
- Avoidance of purchasing a boiler
- Reduced dependence on nuclear power with its long term hazardous waste and lake warming effect
- Avoiding upgrading electrical service to the facility which would have caused temporary closure
- Low part load following capabilities of engine-chillers
- Heat recovery to serve space heating and other heating loads such as a swimming pool, kitchen, laundry

3.1.1 Simplification of the Plant

- No additional mechanical space needed since the absorption chiller heater was being located where a boiler had been.
- Reduced maintenance costs compared to existing equipment being replaced.
- Reducing tenant temperature complaints compared to existing equipment being replaced.
- Replacing other gas chillers.
- Reduced maintenance effort for absorption chiller.
- High efficiency at low load conditions.
- Quiet operation of absorption chiller.
- Single phase electricity of small absorption chillers.
- General installation constraints.
- No rewiring in historic building.
- Minimize reconstruction in historic building.
- Utilization of generator steam in summer that would have been otherwise wasted.
- Elimination of boilers reduced space requirement for plant.
- Relocation of mechanical room providing more useful space.
- Continued cooling provided during power outages.

- Lack of vibration and noise for absorption chillers disturbing the acoustics in an auditorium Please note that the reasons shown may apply only to one specific building.

An important note about this list is that many are special cases where just the right set of constraints caused the design team to consider alternative kinds of chillers. The exceptions to this observation are universities and hospitals which have loads or power generation equipment that are compatible with thermally-driven chillers.

CHAPTER 4:
Gas Cooling Configurations

From the configurations and options described in Appendix A, nine figures were developed that used a range of configurations and options. Those figures are described in the following section. Each figure was developed using OpenOffice Draw program. The description of each figure includes the configuration and options chosen from Appendix A, a list of major components, and possible options.

Every option in Appendix A is either used in one of the nine diagrams described below or is indicated as a possible option.

4.1 Chillers in Series with Microturbine (Figure 1)

Configuration and Options:

- Two chillers in series with lead chiller being gas or thermal chiller
- Gas and thermal chiller or chillers sharing same condenser water circuit with other chillers
- Double-effect turbine exhaust driven absorption
- Option for double effect absorption chiller with turbine generator to use exhaust gases directly in absorber

Major Component List:

- Exhaust Gas Driven Double Effect Absorption Chiller
- Electric Chiller
- Microturbine Generator
- Cooling Tower
- Pumps
- Cooling Coils

Possible Options:

- Two chillers in series with lag chiller being gas or thermal chiller.
- In configurations with two or more chillers, make the chiller sizes equal.
- In configurations with two or more chillers, make the chiller sizes unequal.
- Option to use a deep well to provide condensing water instead of a cooling tower.

- Lakes, rivers, and other bodies of water may be used for rejecting heat instead of a cooling tower.
- Natural gas micro-turbine generator creates electricity and exhaust gases and the heat from the exhaust gases are recovered and are used to drive an absorption chiller.
- Natural gas turbine generator creates electricity and exhaust gases and the heat from the exhaust gases are recovered and are used to drive an absorption chiller.
- Industrial process creates hot air or gas stream directly used in the absorption chiller.
- Waste heat from a generator can also be used with a solid desiccant system to reduce humidity in the outside air intake.
- A turbine generator with absorption can use the chilled water produced by the absorber to cool the inlet air to the turbine.
- If exhaust heat is not sufficient from turbine generator, a duct heater can be used to supplement the waste heat produced.
- Desiccant can use exhaust gases to regenerate or hot water recovered from exhaust using a heat exchanger.
- If exhaust heat is not sufficient from turbine generator, a duct heater can be used to supplement the waste heat produced.
- Industrial process creates hot air or gas stream directly used in the absorption chiller.

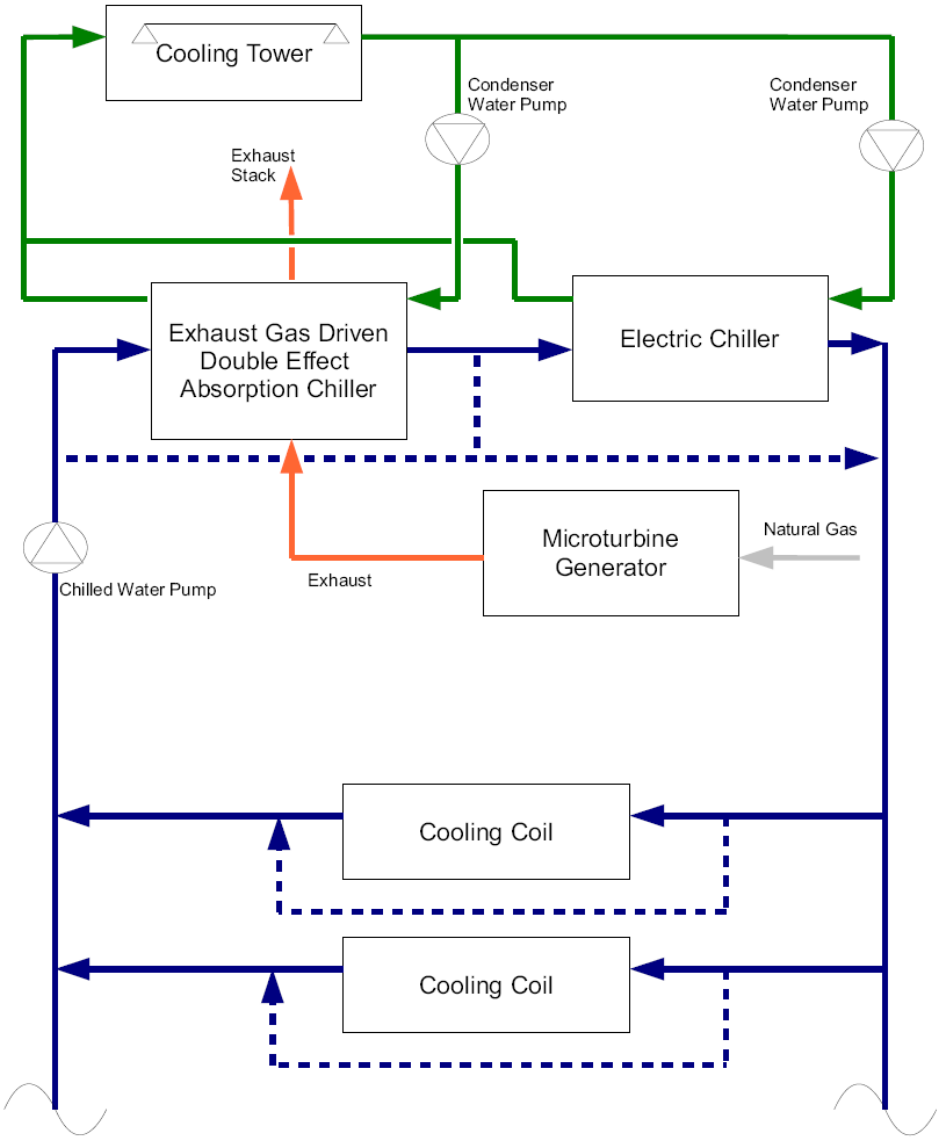

Figure 1: Chillers in Series with Microturbine

4.2 Chillers in Parallel with Boiler (Figure 2)

Configuration and Options:

- Two or more chillers in parallel with primary only variable flow with one, some or all being gas or thermal chillers.
- Gas and thermal chiller or chillers using separate condenser water circuit than other chillers.
- Option for when absorption chillers include using gas boiler.

Major Component List:

- Steam Driven Absorption Chiller

- Electric Chiller
- Boiler
- Cooling Towers
- Pumps
- Cooling Coils

Possible Options:

- Two or more chillers in parallel with bypass with constant flow pumps and variable flow chilled water pump and valves to isolate the operation of each chiller, often called variable priority pumping.
- In configurations with two or more chillers, make the chiller sizes equal.
- In configurations with two or more chillers, make the chiller sizes unequal.
- Steam turbine driven reciprocating compressor chiller.
- Steam turbine driven screw compressor chiller.
- Steam turbine driven scroll compressor chiller.
- Steam turbine driven centrifugal compressor chiller.
- Option to use a deep well to provide condensing water instead of a cooling tower.
- Lakes, rivers, and other bodies of water may be used for rejecting heat instead of a cooling tower.
- Option for when single-effect absorption chillers include using district steam.
- Option for when single-effect absorption chillers include using district steam that was reduced in pressure using a turbine generator.
- Option for when using steam driven or hot water driven absorption chiller includes using condensate after chiller to preheat domestic hot water.
- Natural gas engine generator creates hot water and electricity and hot water is used to drive single effect absorption chillers.
- Natural gas micro-turbine generator creates electricity and exhaust gases and the heat from the exhaust gases are recovered and are used to drive an absorption chiller.
- Natural gas turbine generator creates electricity and exhaust gases and the heat from the exhaust gases are recovered and are used to drive an absorption chiller.
- Industrial process creates excess hot water used to drive the absorption system.

- Industrial process creates hot air or gas stream that goes through heat exchanger to create hot water to drive the absorption system.
- Solar assisted to warm water prior to boiler and feed into absorption chiller.
- Multiple stages of heat exchange from generator waste heat, the first being the hottest for an absorption chiller and the second stage being for service hot water.

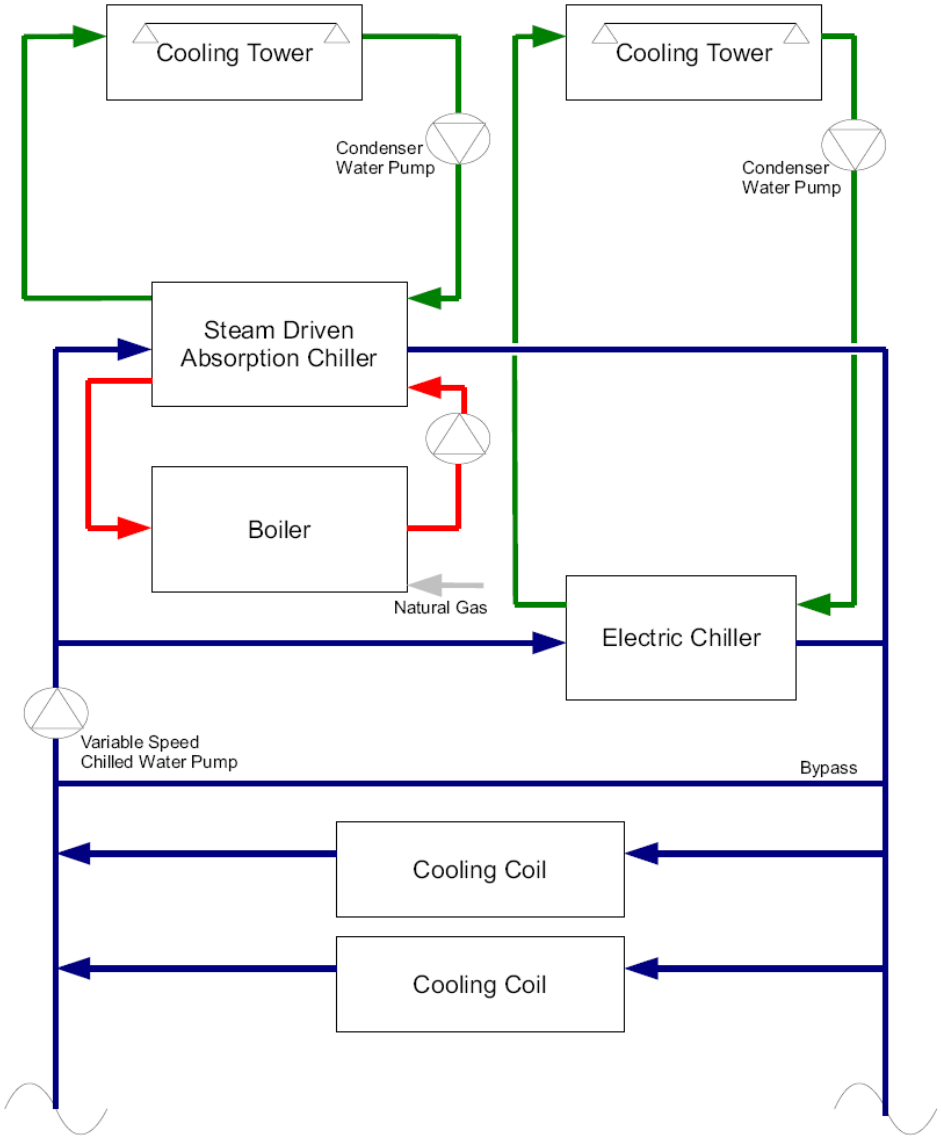

Figure 2: Chillers in Parallel with Boiler

4.3 Sidestream Absorber (Figure 3)

Configuration and Options:

- One or more electric chillers in parallel with primary/secondary pumping (decoupled) with one gas or thermal chiller in series with chilled water return prior to bypass, often called a sidestream configuration.

- Gas and thermal chiller or chillers using separate condenser water circuit than other chillers.

Major Component List:

- Direct Fired Absorption Chiller
- Electric Chillers
- Cooling Towers
- Pumps
- Cooling Coils

Possible Options:

- Gas and thermal chiller or chillers sharing same condenser water circuit with other chillers.
- In configurations with two or more chillers, make the chiller sizes equal.
- In configurations with two or more chillers, make the chiller sizes unequal.
- Option to use a deep well to provide condensing water instead of a cooling tower.
- Lakes, rivers, and other bodies of water may be used for rejecting heat instead of a cooling tower.
- Option for direct-fired absorption chillers can also provide hot water for space heating, domestic hot water or other hot water load. This option is usually referred to as chiller/heater.

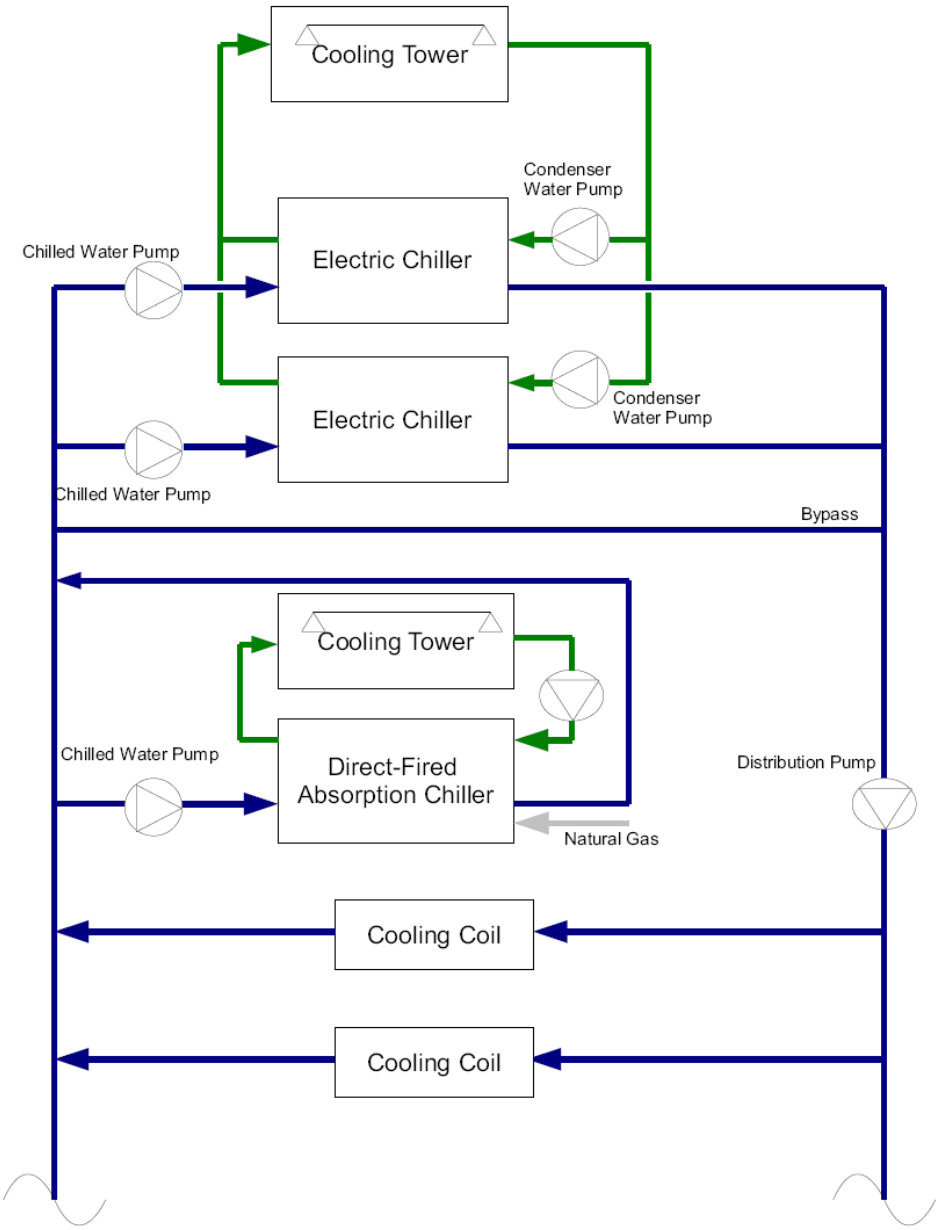

Figure 3: Sidestream Absorber

4.4 Absorption Chiller/Heater (Figure 4)

Configuration and Options:

- Constant flow single gas or thermal chiller.
- Gas and thermal chiller or chillers using air cooled condensers.
- Option for direct-fired absorption chillers can also provide hot water for space heating, domestic hot water or other hot water load. This option is usually referred to as chiller/heater.

Major Component List:

- Direct-Fired Absorption Chiller/Heater
- Air Cooled Condenser
- Boiler
- Pumps
- Cooling Coils
- Heating Coil

Possible Options:

- Primary only variable flow single gas or thermal chiller.
- Constant chilled water flow.
- Variable chilled water flow.
- Gas and thermal chiller or chillers sharing same condenser water circuit with other chillers.
- Option to use a deep well to provide condensing water instead of a cooling tower.
- Lakes, rivers, and other bodies of water may be used for rejecting heat instead of a cooling tower.
- For residential and light commercial applications, an ammonia-water absorption chiller cycle coupled with an air cooled condenser may be used.

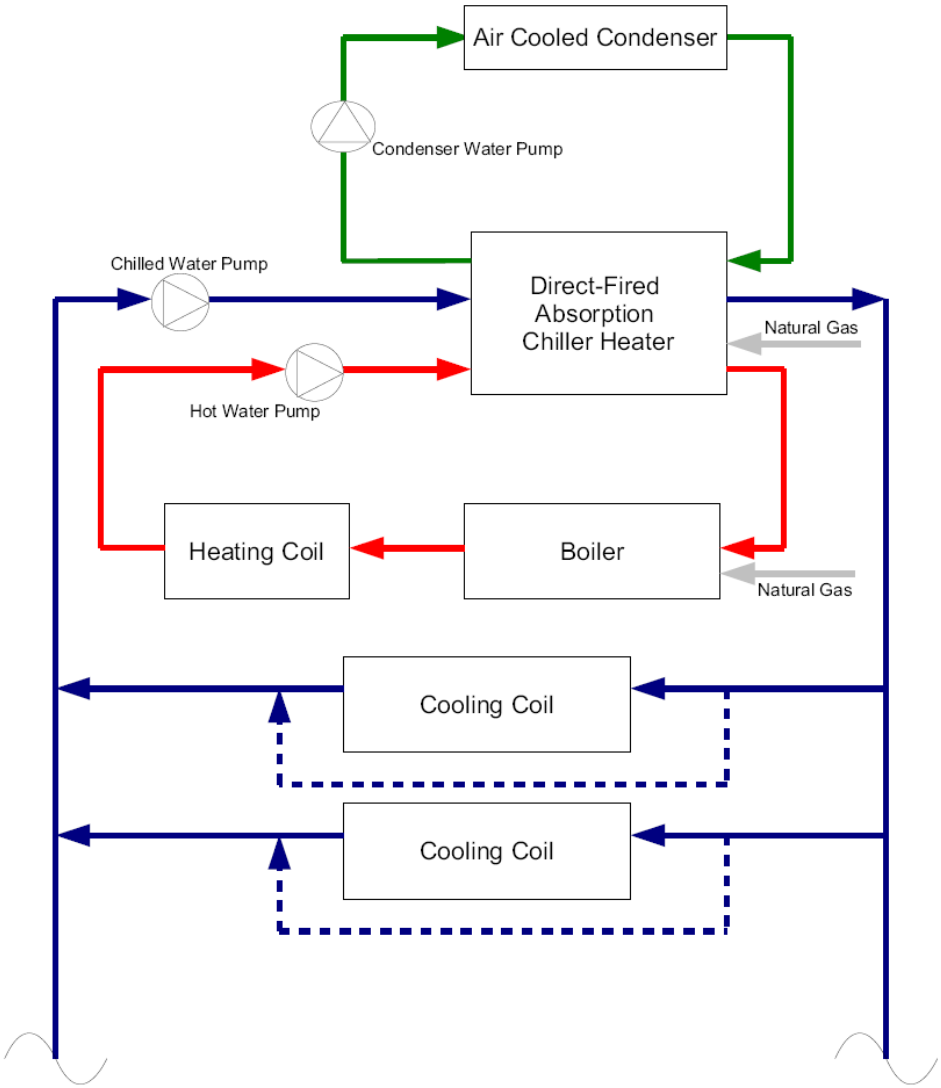

Figure 4: Absorption Chiller/Heater

4.5 Engine Chiller with Heat Recovery (Figure 5)

Configuration and Options:

- Two or more chillers in parallel with primary only variable flow with one, some or all being gas or thermal chillers.
- Options for engine driven chiller heat recovery from intercooler, lube oil, jacket heat, or exhaust.
- Option for engine-driven chillers is to use waste heat recovered for domestic hot water.

Major Component List:

- Engine Chiller
- Electric Chiller
- Cooling Tower
- Boiler
- DHW Tank
- Exhaust Heat Exchanger
- Excess Heat Exchangers
- Hot Water Heat Exchanger
- Pumps
- Cooling Coils

Possible Options:

- Two or more chillers in parallel with primary/secondary pumping (decoupled) with one, some or all being gas or thermal chillers.
- Two or more chillers in parallel with primary/secondary pumping (decoupled) with one being a gas or thermal chillers and bypass located after all chillers which will load gas or thermal chiller preferentially.
- One or more electric chillers in parallel with primary/secondary pumping (decoupled) with one gas or thermal chiller in series with chilled water return prior to bypass often called a sidestream configuration.
- Two or more chillers in parallel with bypass with constant flow pumps and variable flow chilled water pump and valves to isolate the operation of each chiller often called variable priority pumping.
- Engine driven reciprocating compressor chiller.

- Engine driven screw compressor chiller.
- Engine driven scroll compressor chiller.
- Engine-driven centrifugal compressor chiller.
- Gas and thermal chiller or chillers using air cooled condensers.
- In configurations with two or more chillers, make the chiller sizes equal.
- In configurations with two or more chillers, make the chiller sizes unequal.
- Option to use a deep well to provide condensing water instead of a cooling tower.
- Lakes, rivers, and other bodies of water may be used for rejecting heat instead of a cooling tower.
- Option for engine-driven chillers is having electric motor parallel driveline so compressor can be driven by engine or electric motor.
- Option for engine driven chiller is using it to drive refrigeration system.
- Option for engine driven chiller is using it to freeze an ice skating rink.
- Option for engine-driven chiller is to use ammonia for refrigerant.
- Option for engine-driven chillers is to use waste heat recovered for desiccant recharging.
- Option for engine-driven chillers is to use waste heat recovered for swimming pool.
- Option for engine-driven chillers is to use waste heat recovered for laundry.
- Option for engine-driven chillers is to use waste heat recovered for kitchen.
- Option for waste heat recovered is to have supplementary boiler or supplementary burner.

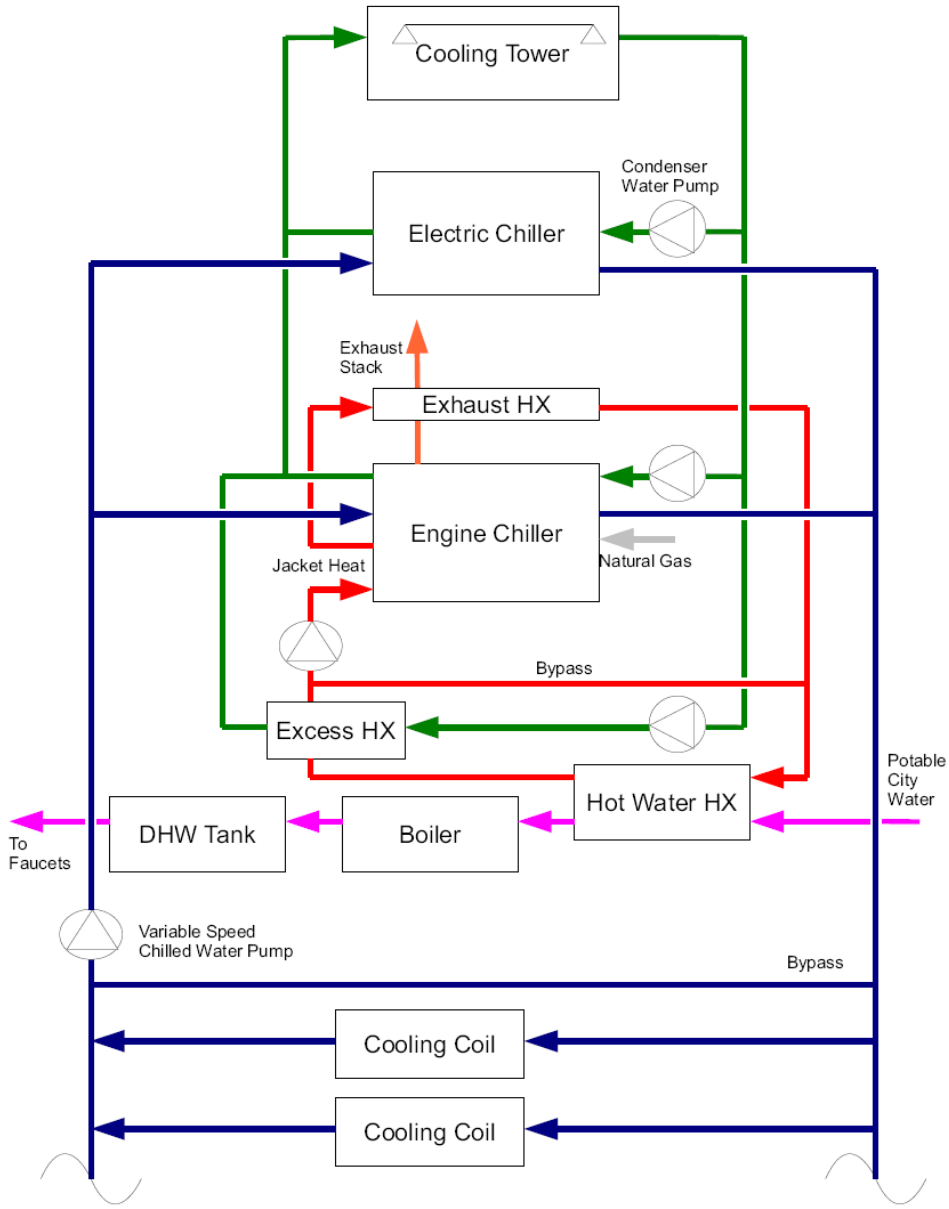

Figure 5: Engine Chiller with Heat Recovery

4.6 Turbine with Open Centrifugal Chiller (Figure 6)

Configuration and Options:

- Two or more chillers in parallel with primary/secondary pumping (decoupled) with one, some or all being gas or thermal chillers.
- Natural gas turbine-generator that has direct drive to open driven chiller.
- Open drive chillers can be reciprocating, screw or centrifugal.
- Use heat recovery steam generator from high temperature source.
- Double-effect steam driven absorption.

- Gas and thermal chiller or chillers sharing same condenser water circuit with other chillers.
- If exhaust heat is not sufficient from turbine generator, a duct heater can be used to supplement the waste heat produced.

Major Component List:

- Turbine Generator
- Shaft Driven Open Centrifugal Chiller
- Steam Driven Double Effect Absorption Chiller
- Heat Recovery Steam Generator
- Cooling Tower
- Duct Burner
- Pumps
- Cooling Coils

Possible Options:

- Single-effect steam driven absorption.
- Single-effect hot water driven absorption.
- Steam turbine driven reciprocating compressor chiller.
- Steam turbine driven screw compressor chiller.
- Steam turbine driven scroll compressor chiller.
- In configurations with two or more chillers, make the chiller sizes equal.
- In configurations with two or more chillers, make the chiller sizes unequal.
- Option to use a deep well to provide condensing water instead of a cooling tower.
- Lakes, rivers, and other bodies of water may be used for rejecting heat instead of a cooling tower.
- Option for when using steam driven or hot water driven absorption chiller includes using condensate after chiller to preheat domestic hot water.
- Waste heat from a generator can also be used with a solid desiccant system to reduce humidity in the outside air intake.
- A turbine generator with absorption can use the chilled water produced by the absorber to cool the inlet air to the turbine.

- Multiple stages of heat exchange from generator waste heat, the first being the hottest for an absorption chiller and the second stage being for service hot water.
- To recover high temperature heat from a turbine generator a special transfer fluid may be used such as an oil.
- Steam turbine generator can be driven from gas turbine heat recovered through heat recovery steam generator.
- Option for steam turbine driven chillers includes single stage absorption chillers to recover heat remaining after the turbines.
- Desiccant can use exhaust gases to regenerate or hot water recovered from exhaust using heat exchanger.
- Option for steam turbine driven chillers includes single stage absorption chillers to recover heat remaining after the turbines.

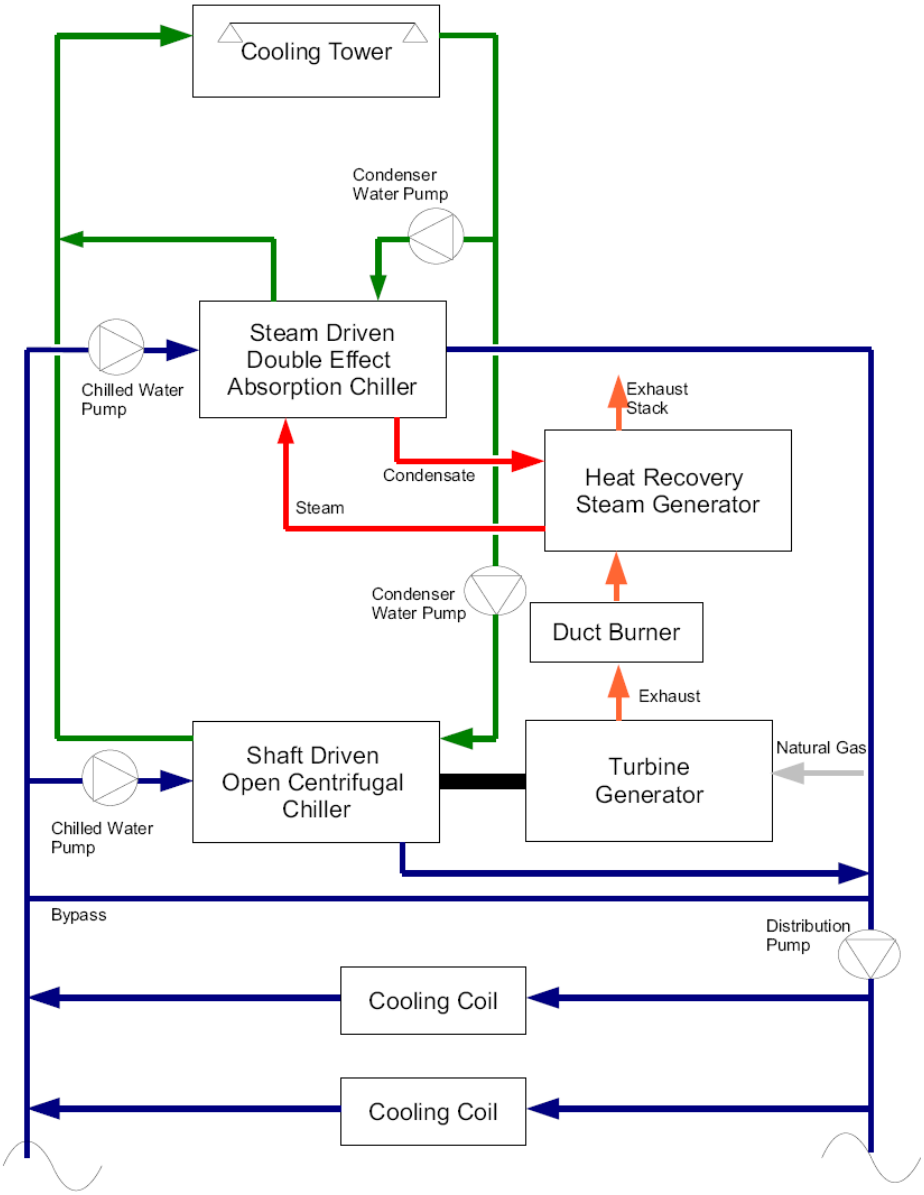

Figure 6: Turbine with Open Centrifugal Chiller

4.7 Chillers in Series with Chilled Water Storage (Figure 7)

Configuration and Options:

- Two chillers in series with lead chiller being gas or thermal chiller
- Natural gas direct-fired double-effect absorption
- Gas and thermal chiller or chillers sharing same condenser water circuit with other chillers

Major Component List:

- Direct Fired Double Effect Absorption Chiller

- Electric Chiller
- Chilled Water Storage Tank
- Cooling Tower
- Pumps
- Cooling Coils

Possible Options:

- Two chillers in series with lag chiller being gas or thermal chiller.
- Natural gas direct-fired single-effect absorption.
- Use ice storage with one or more of the following:
    - In configurations with two or more chillers, make the chiller sizes equal.
    - In configurations with two or more chillers, make the chiller sizes unequal.
    - Option to use a deep well to provide condensing water instead of a cooling tower.
    - Lakes, rivers, and other bodies of water may be used for rejecting heat instead of a cooling tower.
    - Option for direct-fired absorption chillers can also provide hot water for space heating, domestic hot water or other hot water load. This option is usually referred to as chiller/heater.

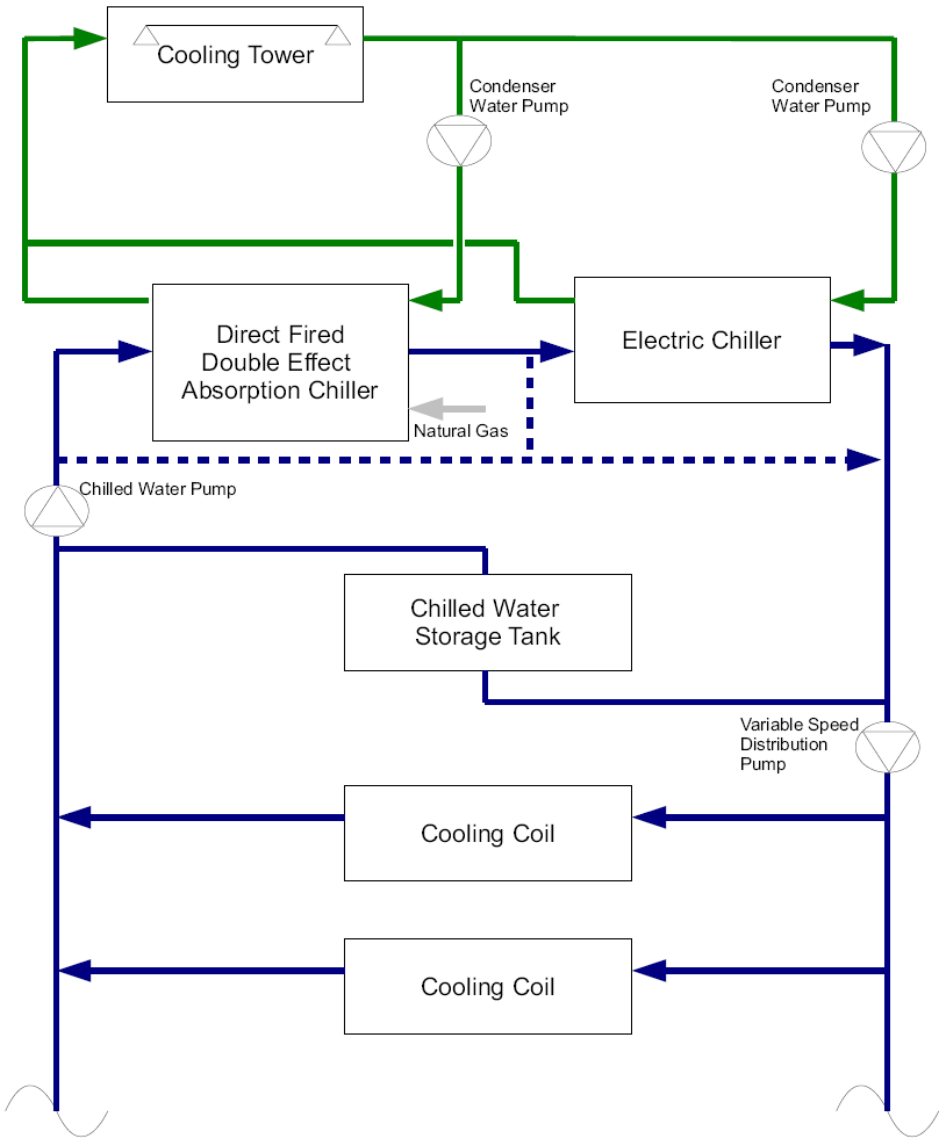

Figure 7: Chiller in Series with Chilled Water Storage

4.8 Absorption Priority Piping (Figure 8)

Configuration and Options:

- Two or more chillers in parallel with primary/secondary pumping (decoupled) with one being a gas or thermal chillers and bypass located after all chillers which will load gas or thermal chiller preferentially.
- Optional heat exchanger in parallel with chillers to allow for heat exchange between condenser water and chilled water.
- Gas and thermal chiller or chillers sharing same condenser water circuit with other chillers.

Major Component List:

- Direct Fired Absorption Chiller
- Electric Chillers
- Cooling Tower
- Water Side Economizer Heat Exchangers
- Pumps
- Cooling Coils

Possible Options:

- Natural gas direct-fired single-effect absorption.
- In configurations with two or more chillers, make the chiller sizes equal.
- In configurations with two or more chillers, make the chiller sizes unequal.
- Option to use a deep well to provide condensing water instead of a cooling tower.
- Lakes, rivers, and other bodies of water may be used for rejecting heat instead of a cooling tower.
- Option for direct-fired absorption chillers can also provide hot water for space heating, domestic hot water or other hot water load. This option is usually referred to as chiller/heater.

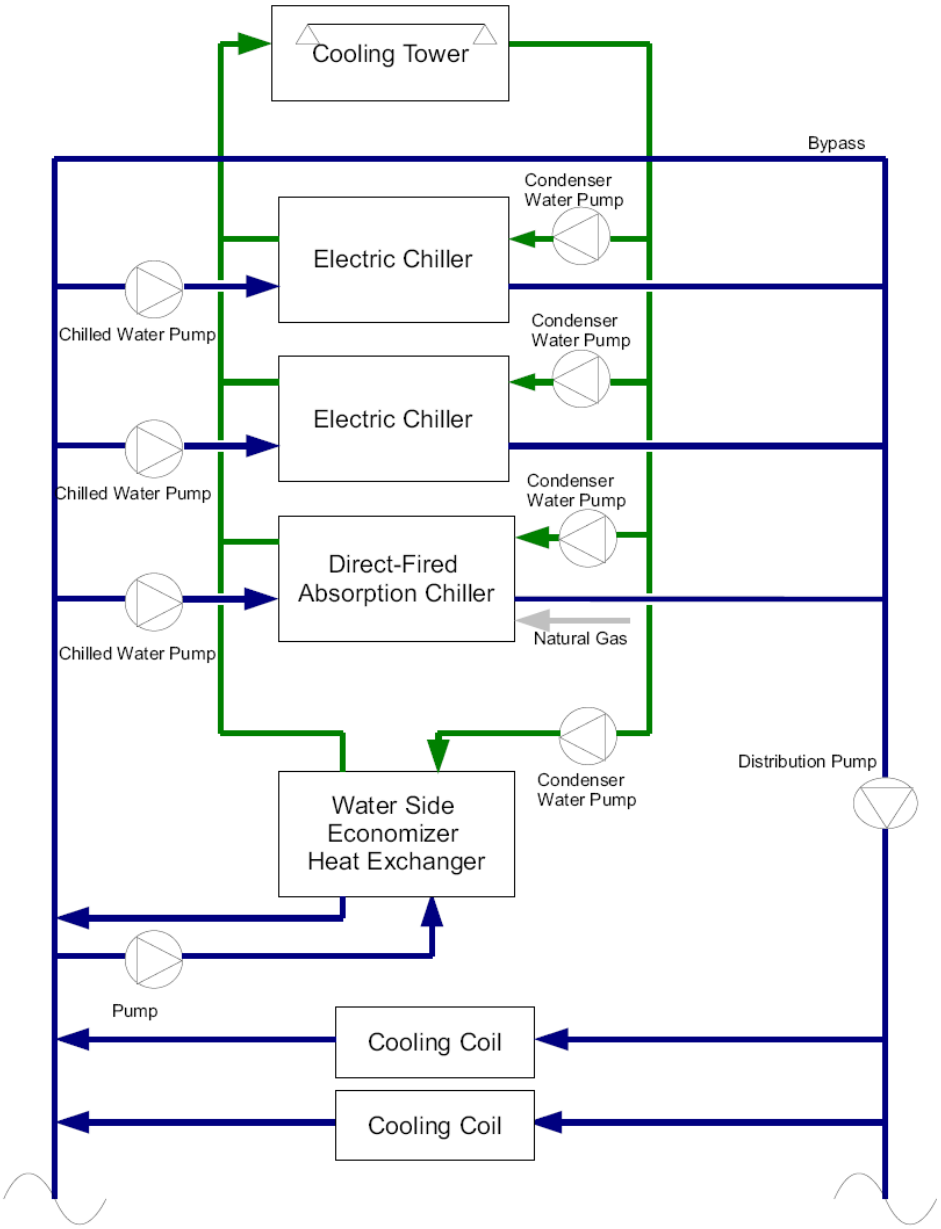

Figure 8: Absorption Priority Piping

4.9 Engine Driven Ammonia Chiller (Figure 9)

Configuration and Options:

- Two or more chillers in parallel with primary/secondary pumping (decoupled) with one, some or all being gas or thermal chillers.
- Gas and thermal chiller or chillers sharing same condenser water circuit with other chillers.
- Option for engine-driven chiller is to use ammonia for refrigerant for lower temperature refrigeration applications.

- For low temperature industrial processes, an ammonia-water absorption chiller cycle may be used.

Major Component List:

- Engine Chiller with Ammonia
- Electric Chillers
- Cooling Tower
- Cooling Coil
- Pumps

Possible Options:

- Two or more chillers in parallel with primary/secondary pumping (decoupled) with one being a gas or thermal chillers and bypass located after all chillers which will load gas or thermal chiller preferentially.
- Two or more chillers in parallel with bypass with constant flow pumps and variable flow chilled water pump and valves to isolate the operation of each chiller often called variable priority pumping.
- Engine driven reciprocating compressor chiller.
- Engine driven screw compressor chiller.
- Engine driven scroll compressor chiller.
- Engine-driven centrifugal compressor chiller.
- In configurations with two or more chillers, make the chiller sizes equal.
- In configurations with two or more chillers, make the chiller sizes unequal.
- Option to use a deep well to provide condensing water instead of a cooling tower.
- Lakes, rivers, and other bodies of water may be used for rejecting heat instead of a cooling tower.
- Options for engine driven chiller heat recovery from intercooler, lube oil, jacket heat, or exhaust.
- Option for engine driven chiller is using it to drive refrigeration system.
- Option for engine driven chiller is using it to freeze an ice skating rink.
- Option for engine-driven chiller is to use ammonia for refrigerant.

- Option for engine-driven chillers is to use waste heat recovered for desiccant recharging.
- Option for engine-driven chillers is to use waste heat recovered for domestic hot water.
- Option for engine-driven chillers is to use waste heat recovered for swimming pool.
- Option for engine-driven chillers is to use waste heat recovered for laundry.
- Option for engine-driven chillers is to use waste heat recovered for kitchen.

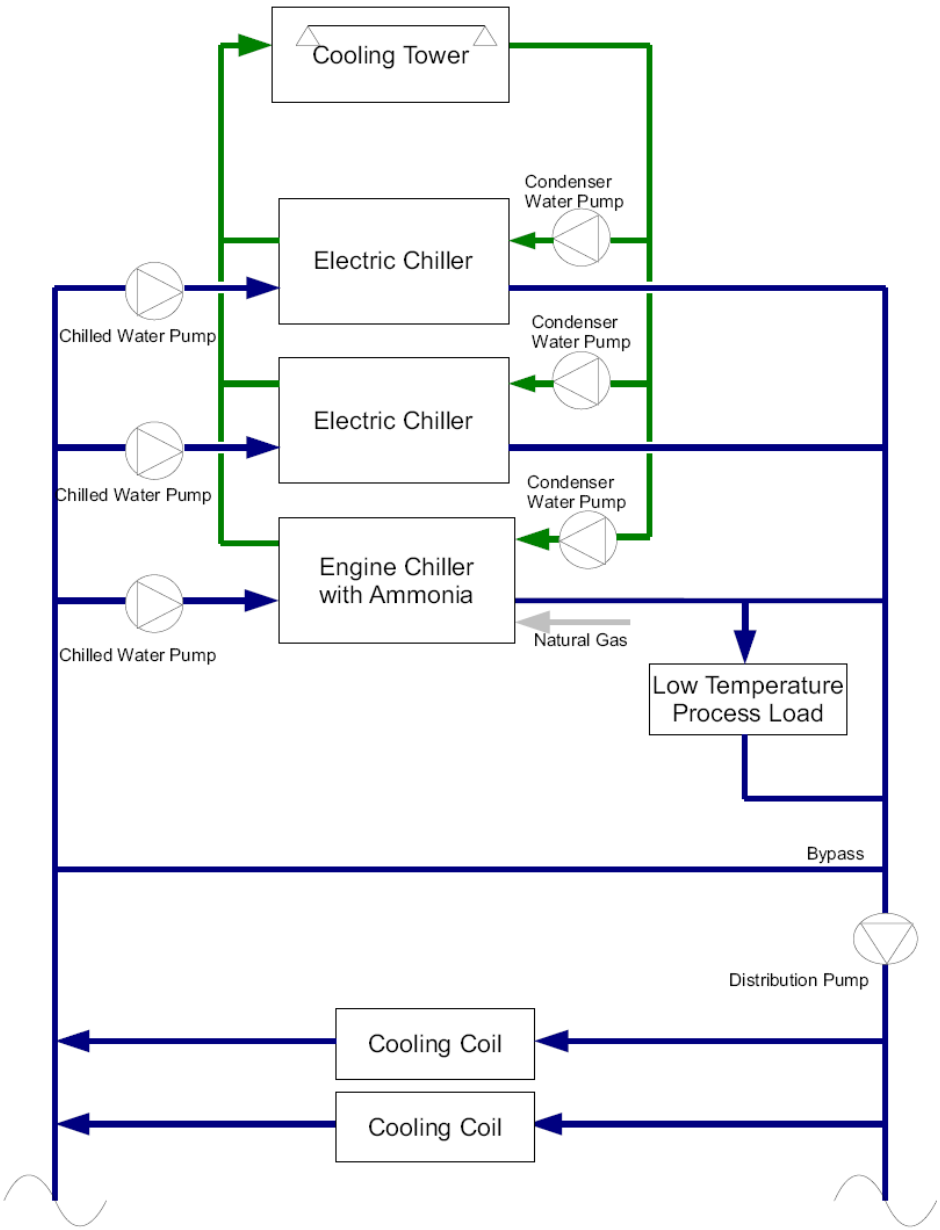

Figure 9: Engine Driven Ammonia Chiller

CHAPTER 5:
Decision Process Diagram

The Decision Process Diagram is a five page flow chart which follows the steps used by a designer or a design team in the process of chilled water plant design. Each page of the Decision Process Diagram is described below.

Some decision points in the diagram have supplementary textual descriptions shown below the diagram. The descriptions include the decision being made and why different alternatives may be chosen.

Please note that boxes labeled "Seek Non-Gas Cooling Options" indicate when the design process would no longer consider absorption or engine chillers as part of the plant design. A design process for a chilled water plant using electric chillers would take place when "Seek Non-Gas Cooling Options" is reached. Also note that the diagram has preconditions of "Need to Install New or Retrofit Chilled Water System."

The Decision Process Diagram is presented without descriptions in Appendix B as a visual guide.

Page 1

Summary

Begins at "Start" and the upper left corner describes preconditions and prerequisites that must be both affirmative. The upper right portion of the page shows seven decision points that may influence the design toward the use of gas cooling. If any of the seven questions are affirmative, then gas cooling should be considered. The bottom of the page show three showstoppers that may prevent gas cooling from being further considered. The flow of the diagram continues on page 2 through the circle marked "A."

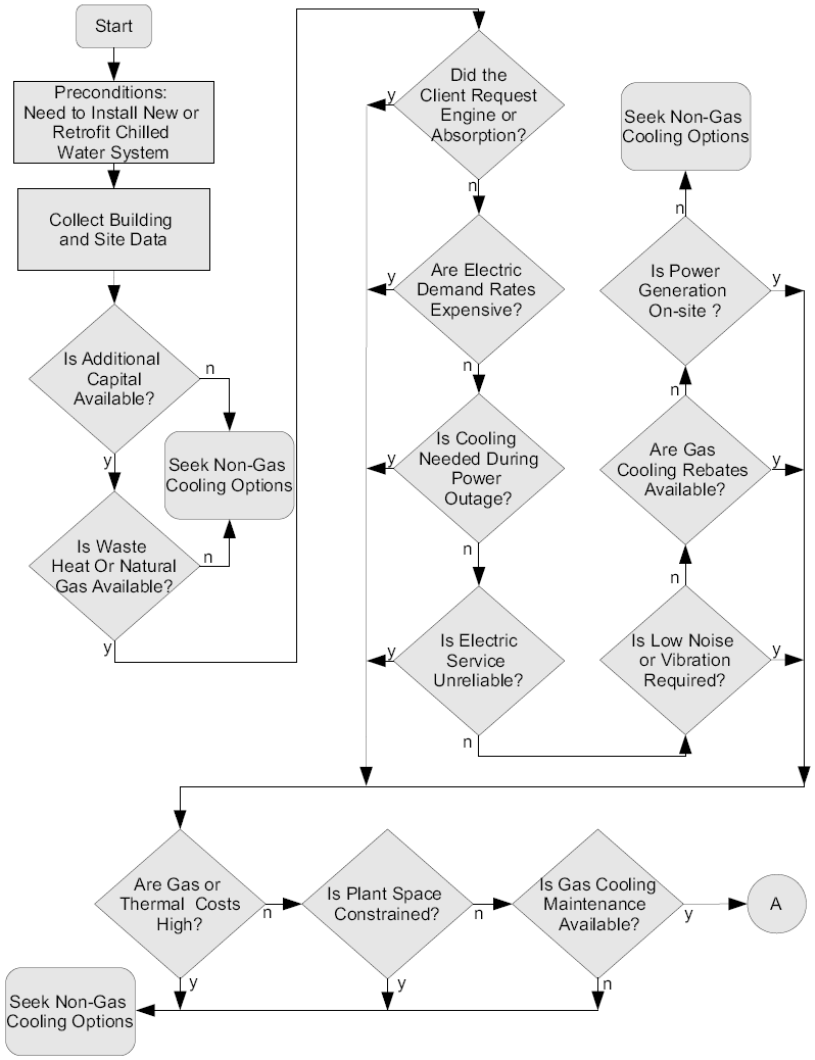

Figure 10: Decision Process Diagram Page 1

Decision Points

Is Additional Capital Available – Page 1

Almost every gas cooling plant is going to have a higher first cost than a typical chilled water plant utilizing standard electric chillers. If a project is severely capital constrained, it is unlikely that the owner will invest extra funds into any type of alternative chilled water plant. This is essentially a prerequisite.

Is Heat Source or Natural Gas Available – Page 1

The building site needs to include a heat source or natural gas for an engine driven or absorption chiller to operate. Many locations do not have any natural gas service and are unlikely to have a heat source available either. Cities with district heating systems should be counted here since there is often waste heat from power generation facilities that provide the district heat. This is essentially a prerequisite.

Did the Client Request Engine or Absorption – Page 1

Many building owners initiate the design process with specific options they would like to consider including the specification of engine-driven chillers or absorption chillers. If the client requests these chillers to be included no other positive indicator is necessary for these kinds of chillers to be considered in the chilled water plant design process.

Are Electric Demand Rates Expensive – Page 1

If the local electric utility or other provider for electricity has relatively high demand rates such that demand charges are a major fraction of the total utility bill, it may indicate that gas cooling would be a cost effective chilled water plant option. This is a subjective evaluation based on the designer's experience with the impact of electric demand charges on making building design decisions. High electric costs in general may also be an indicator. Later, the cost of gas will be considered.

Is Cooling Needed During Power Outage – Page 1

If cooling must be maintained in the building during a power outage, such as for food refrigeration or data processing centers, gas cooling may be an option to consider. By reducing the electrical demand for the facility compared to an electric chiller, gas chillers help to reduce the size of backup power generation required.

Is Electric Service Unreliable – Page 1

Frequent power outages caused by unreliable electric service can cause business interruptions and prompt the use of power generation in a facility for backup power. To reduce the load on a backup power supply, gas cooling can operate with significantly lower power draws than electric chillers serving the same load.

Is Low Noise or Vibration Required – Page 1

Some buildings have spaces with specific acoustic or vibration requirements such as auditoriums, theatres, medical testing, or board rooms. These spaces may be located close enough to the proposed location for the chillers to cause consideration of a chiller with lower vibration and noise characteristics. One such chiller is an absorption chiller that has few mechanical moving parts.

Are Gas Cooling Rebates Available – Page 1

Some gas utilities have offered incentives, such as rebates, to help offset some of the first cost of installing gas cooling as a method to increase sales of natural gas especially in the summer months. Some electric utilities have offered similar incentives, such as rebates, to reduce peak demand. Other companies or agencies have also promoted alternatives to electric chillers by using rebates. These incentives reduce or eliminate the cost premium usually associated with gas cooling making payback periods much shorter and encouraging how often they are specified.

Is Power Generation On-site – Page 1

Buildings that include power generation often have waste heat that is primarily used during winter months for heating. The waste heat could also be used during other times of the year as a source of heat to drive absorption chillers. Single effect absorption chillers can use the lower temperature waste heat from the jacket cooling of an engine generator, while exhaust temperatures from engine generators or turbine generators is often sufficient to drive a double-effect absorption chiller.

Are Gas or Thermal Costs High – Page 1

One showstopper in assessing gas cooling in the central chilled water plant is high costs of natural gas or other thermal sources. When natural gas costs are high it is much more difficult to cost justify the premium normally associated with gas chillers. Likewise, if the only source of thermal energy used to drive an absorption chiller is high, perhaps from a district heating system, it is unlikely that it will be cost effective to use that thermal energy source. This is a subjective evaluation based on the designer's experience with the impact of gas charges on making building design decisions.

Is Plant Space Constrained – Page 1

Certain gas chillers require substantially more space than typical electric chillers. Absorption chillers are physically larger than many electric chillers of the same capacity. Engine chillers are usually larger than the equivalent electric chiller especially when considering the heat recovery equipment that is commonly specified with them. For mechanical rooms that are space constrained the additional space requirement may prevent the use of gas chillers.

Is Gas Cooling Maintenance Available – Page 1

Electric chillers can be installed in a building with the expectation that many choices will exist for providing routine service and repair work. Absorption chillers, since they use a fundamentally different refrigeration cycle, require more specialized knowledge. Engine chillers require maintenance personnel with knowledge of engines as well as standard compression refrigeration. Due to the specialized knowledge needed to maintain gas chillers, finding service for them can sometimes be difficult in areas that have not traditionally had many installed. Due to this lack of maintenance personnel, some locations would not be good choices for gas chillers.

Page 2

Summary

The design process has continued from page 1 through the circle marked "A." The process is linear at this point with four decision gates that may eliminate the further consideration of gas cooling. Four of the process steps are shown with a thicker border and those process steps are shown in greater detail on the page indicated. The process ends with the "Perform Detailed Plant Design" step.

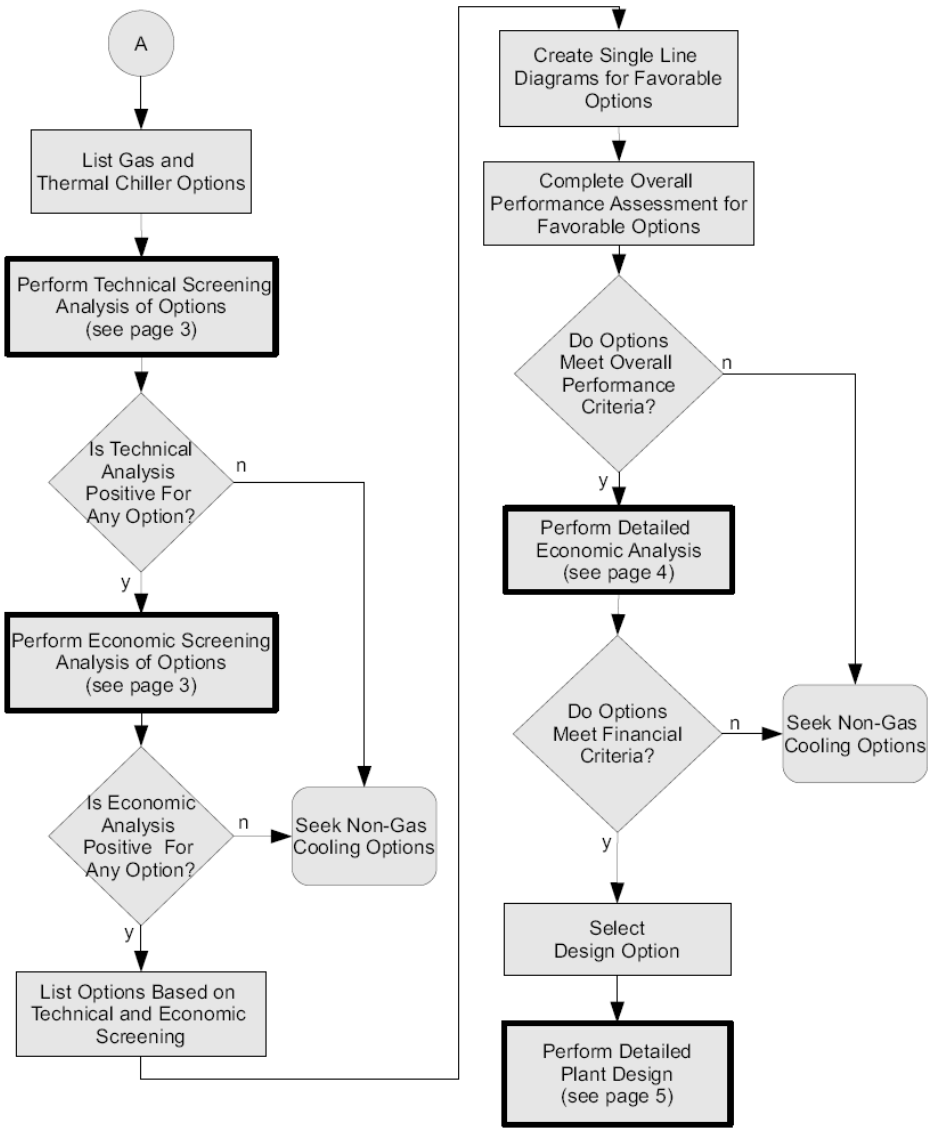

Figure 11: Decision Process Diagram Page 2

Decision Points

Is Technical Analysis Positive for Any Option – Page 2

The "Perform Technical Screening Analysis of Options," which is shown on page 3 of the process diagram, is applied to all of the options under consideration to see if the predicted energy use and performance meets the criteria established by the design engineer or client. Since the type of performance metrics that may be applied here may vary by the individual client goals, the technical screening analysis of options description is left generic.

Is Economic Analysis Positive for Any Option – Page 2

The "Perform Economic Screening Analysis of Options" performed in the previous step and shown in detail on page 3, is meant as a preliminary economic evaluation utilizing rules of thumb and approximate costs. This is necessary because the effort in a detailed economic analysis may not be warranted for many options. This narrows the list of options under further evaluation. It is critical that the technical screening analysis is done prior to the economic screening analysis since it is the step that computes the equipment hours of operation and overall performance.

Do Options Meet Overall Performance Criteria – Page 2

The list of options being considered has been filtered down by this point in the overall process. This decision point decides whether any design options that remain meet the design engineers or clients overall performance metrics or criteria. The criteria could be related to the energy consumption or be more basic such as effectively utilizing waste heat that is available. In addition, a previous step of creating single line diagrams will help solidify the components required for various options which may exceed the customer's space requirements.

Do Options Meet Financial Criteria – Page 2

This is the last major decision point prior to the "Perform Detailed Plant Design" step and directly follows the "Perform Detailed Economic Analysis" step. During the detailed economic analysis the design options are refined and this decision box determines if they meet the payback or life-cycle cost criteria established with the customer for evaluating premium cost plant options. At this point, all first costs for the components of the plant options being considered should be known. The first cost and the estimate of operating cost, whether by simulation or spreadsheet, will provide an indication of the cost effectiveness of the few design options still under consideration. It is very likely that one or only a few design options will meet the financial criteria. It is possible that if no design options meet the financial criteria and that no further consideration of gas cooling options will be made.

Page 3

Summary

This page shows two of the process steps from Page 2 in greater detail. Both "Perform Technical Screening Analysis of Options" and "Perform Economic Screening Analysis of Options" are linear processes. The "Begin" box indicates the point where the line is coming into the box shown on Page 2 and "Return" indicates the point where the line leaves the box shown on Page 2.

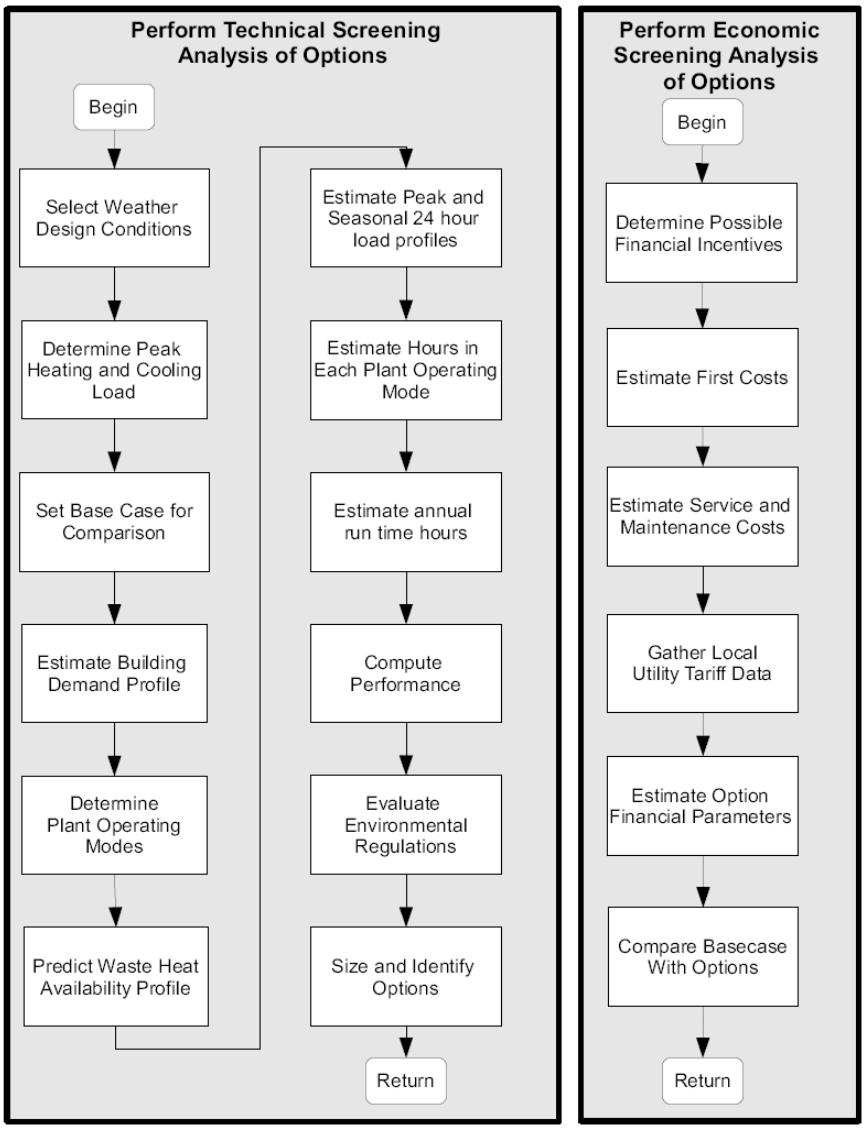

Figure 12: Decision Process Diagram Page 3

Page 4

Summary

The "Perform Detailed Economic Analysis" process step from Page 2 is described in more detail. The overall process may be iterative with the decision of whether the design is optimal being a subjective evaluation that causes the process to repeat. The "Begin" box indicates the point where the line is coming into the box shown on Page 2 and "Return" indicates the point where the line leaves the box shown on Page 2.

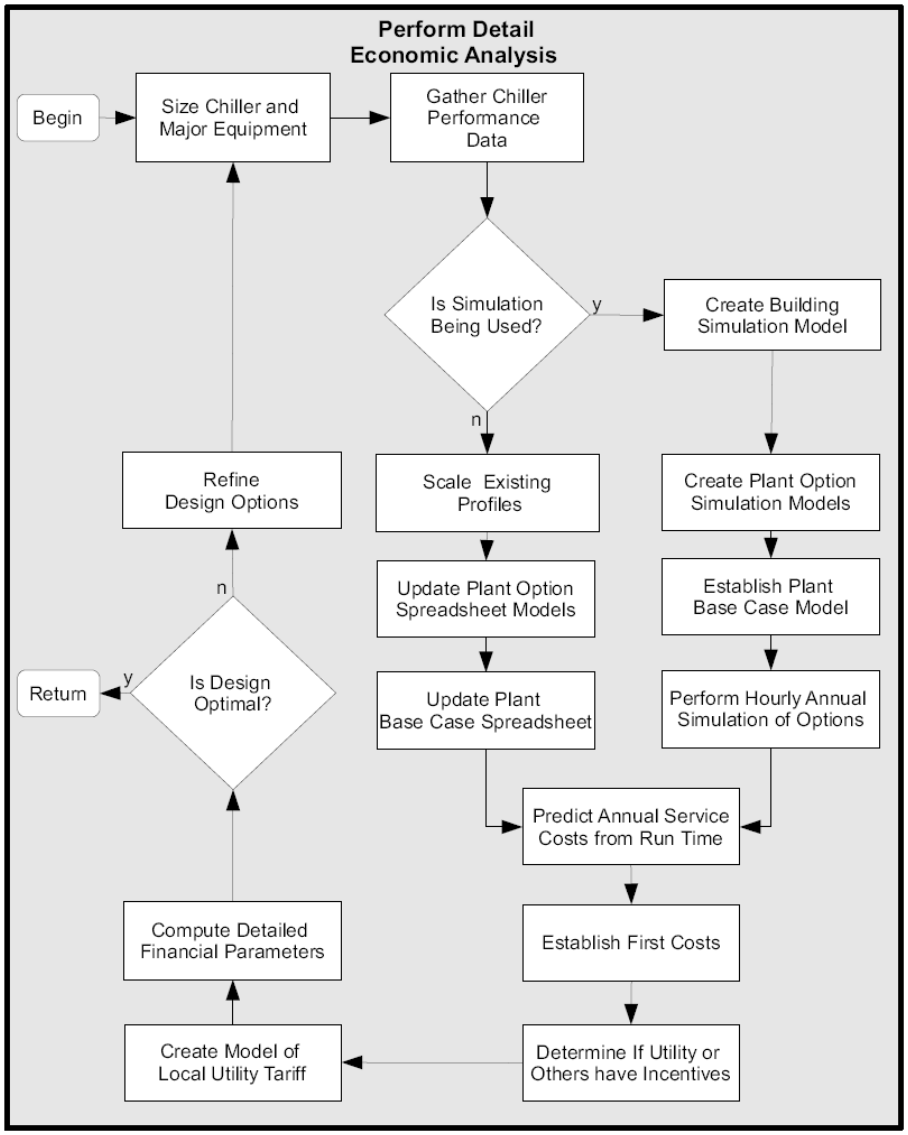

Figure 13: Decision Process Diagram Page 4

Decision Points

Is Simulation Being Used – Page 4

Using building energy simulation during the design process, specifically during the "Perform Detailed Economic Analysis" stage can create much more accurate estimates of annual energy use and energy cost than other spreadsheet methods. Unfortunately, building energy simulation also requires substantial effort and most design firms will not use building energy simulation unless specifically paid to do so. Alternatives to building energy simulation include using profiles for typical buildings and scaling them to match the building being designed.

Is Design Optimal – Page 4

During the “Perform Detailed Economic Analysis” stage, shown on Page 4, the design is refined and optimized. Most of the steps can be repeated until an optimal design is reached. It is likely that several iterations will take place. For example, a hybrid chilled water plant involving both gas or thermal chillers as well as electric chillers must balance the capacities and sequencing of those chillers against annual energy cost savings for each design. The decision if the design is optimal can seldom be reached analytically since the size and cost of components change in steps. Instead, a subjective evaluation of refining the design is often made weighing the improvement found in the last iteration against the desire to reach a specific financial criteria goal.

Page 5

Summary

The “Perform Detailed Plant Design” step from Page 2 is shown in greater detail. The process is iterative with the subjective evaluation of whether to continue to refine the design causing the mostly linear process to repeat. The “Begin” box indicates the point where the line is coming into the box shown on Page 2 and “Return” indicates the point where the line leaves the box shown on Page 2.

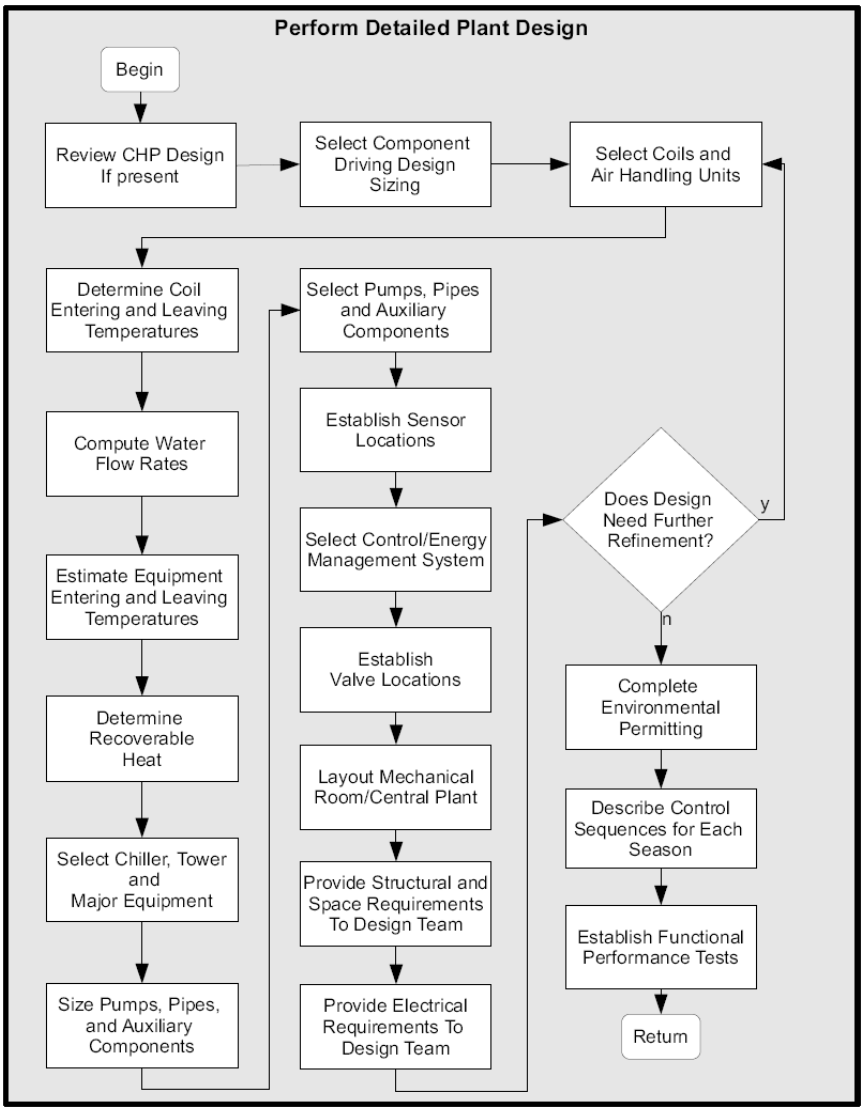

Figure 14: Decision Process Diagram Page 5

Decision Points

Does Design Need Further Refinement – Page 5

During the "Perform Detailed Plant Design" stage the design is refined as more and more details are specified. This may be an iterative process as one component influences the design of other components such as coil selection influencing flow rates which influence pipe size. Due to the interaction of the components during the design process, it is possible that further refining of the design is required. The designer needs to continue to refine the design, a sometimes subjective process, if incompatibilities are found in components specified during different steps of the detailed design process. After the design has been refined sufficiently other steps such as permitting, control sequence specification and establishing testing can proceed.

CHAPTER 6:
Best Practices

6.1 Design Best Practices

6.1.1 Selection of Gas and Thermal Chillers

Gas and thermal chillers, such as absorption and engine-driven chillers, may be appropriate to select for use in a central chilled water plant. The choice of when to use these chillers depends on the plant configuration, the economics and other special requirements. The decision process diagram in Appendix B (and described above in Section 5) can assist in the selection process.

The economic conditions that make gas and thermal chillers a good choice include high effective demand costs for electricity, such as when the demand charge is a large portion of the bill or when a ratchet is included that increases the impact of high summer electricity demands. Under electric utility real time pricing rates, a reduction in demand can often result in significant cost savings. In addition, the overall price of electricity and the price difference between electricity and natural gas, called "spark spread" should be considered. During times with relatively high natural gas prices these chillers may not be appropriate unless they are using heat energy that would be otherwise wasted. Direct fired absorption chillers not only provide chilled water but many models also can provide hot water and because of this, fewer boilers may be required in the plant, reducing the overall first cost of the central plant.

The economics of central plants combining power generation with heat recovery and absorption chillers also must consider any electric utility exit fees and standby rates. Utilities that use net-metering can increase the likelihood that the economics would favor these plants. Net-metering is when the utility charges the customer for just the difference between the electricity brought into the building and the extra electricity produced by the central plant power generation equipment and provided to the utility.

In order to properly assess the economics of gas and thermal chillers, hourly building energy simulation programs, such as eQUEST, TRACE, HAP or EnergyPlus, may be used. A description of the building and the plant design options are entered into the software and the simulation results are compared to those from the building with a baseline plant design. Due to this, it is as important to choose and model a reasonable baseline as it is to assess various gas and thermal chiller options. Several vendors have dedicated software to assess the economics that have built in building energy simulation programs. Determining the life-cycle costs or payback can often be performed with these programs. Later during detailed design, assessing control options can be performed using the same building energy simulation model.

Absorption and engine chillers may be appropriate in some specific configurations and situations. Absorption chillers are a good fit when waste heat is available from either power generation or an industrial or commercial process. Single effect absorption

chillers make the most sense when the temperature of the waste heat stream is relatively low. For higher temperature waste heat streams, double effect absorption chillers, which are more efficient, may be appropriate.

Engine chillers, which produce waste heat directly, are a good choice when both heating and cooling are usually needed at the same time. This might include buildings with specific humidity requirements such as hospitals, libraries and museums or, in buildings with significant cooling loads in portions of the building while other parts of the building need heating such as office buildings with data centers.

Absorption chillers have few moving mechanical parts other than a few pumps, so they can operate producing little noise and with almost no vibration. Applications where this might be desirable include theatres and other public assembly buildings. Absorption chillers are larger and heavier than electric chillers of similar capacity so extra mechanical room space may be required and, potentially, added bracing. The structural engineer on the design team should be informed early in the design process of the greater weight of the absorption chiller.

Absorption and engine chillers may be appropriate due to constrained electrical systems, such as when power is limited either by the utility service or by current wiring capacity in the facility. When power must be assured such as in data centers or when energy security or energy vulnerability is a concern, backup power and battery systems are needed and are expensive. Thermal chillers may be appropriate in these situations to minimize the capacity of the backup power and battery systems.

Flexible plants containing gas or thermal chillers along with electric chillers

Central chilled water plants that contain natural gas or thermal chillers as well as electric chillers offer increased flexibility over plants that contain only one type of chiller. These "hybrid" plants allow for changes in sequencing the different types of chillers to respond to changes in the cost of electricity and natural gas. Many options on how to configure these plants are available and are shown in Section 4.0: Gas Cooling Configurations. A typical parallel arrangement does not preferentially load the absorption or engine chiller like other configurations can such as the side stream approach that decouples the absorber. By decoupling the chillers, they can be better controlled and allow the amount of load that each chiller satisfies to be regulated.

In a hybrid plant the sequencing of the chillers can make a big impact on the economics. In some cases, it is best to use absorption chillers as the baseline. This also helps reduce the energy penalty associated with restarting the absorption chillers. In addition, variable speed electric chillers can more easily match the remaining load as it changes. The exact type of sequencing depends on the electric and natural gas rates structures and is likely to change over the life the equipment. Optimal controls strategies can help automatically change the sequencing of the thermal and electric chillers. Manually operated chilled water plants with both electric and thermal chillers need to be carefully managed so that peak demands are avoided. If they are not, especially for locations with ratchets, the cost savings for demand avoidance may not really materialize.

The sizing of the absorption chiller in a hybrid chilled water plant may be based on the amount of waste heat available from the power generation equipment, industrial process, or commercial process.

Because absorption chillers often have a 15 °F temperature difference between the condenser water supply and return lines, instead of the common 10 °F difference used for many electric chillers, it can be a challenge to mix absorption chillers and electric chillers in the same plant. If a common cooling tower is serving both absorption and electric chillers it is recommended that a bypass valve, bypass line, and dedicated pumps be employed to regulate flow to each chiller. Dedicated towers, one or more for the electric chiller and one or more for the absorption chiller, allow completely independent operation and take advantage of the operating temperatures more effectively. In addition, dedicated towers are more effective if free cooling strategies are employed. The main detraction for dedicated cooling towers is the added expense of the tower and additional piping.

Utilizing waste heat driven absorption chillers

Using absorption chillers that are driven by heat sources, such as hot-water driven absorption chillers or steam absorption chillers, are a good way to utilize energy that would have been otherwise wasted. These systems are most cost effective when the recovered heat is essentially free because it is waste from another commercial or industrial process. When power is being generated in the facility by a generator, often called combined heating and power (CHP) or cogeneration, the heat from the generator can be recovered to provide energy for the absorption chiller to provide cooling. Other applications include when an industrial process produces heat, or when bio-gas from digesters or landfills is produced and fires a boiler.

Due to providing extra functions, combining absorption chillers with a central plant that uses waste heat from power generation or other sources can be cost effective when the initial cost premium is offset by reduced operating costs. No matter what the source of heat used for an absorption chiller, it is important to match the capacity and timing of the source of heat with the load that the absorption chiller will serve. It is best to recover heat from an on-site power generator for an absorption chiller if both the need for power load and need for cooling occur simultaneously. Not only should the capacity of the absorption chiller match the output from the waste heat application but the annual utilization of the waste heat should be maximized. It may be most cost effective to make the absorption chiller smaller than the peak heat output so that the annual utilization of the waste heat is 75 percent or greater.

For the plant that includes power generation, waste heat recovery and absorption chillers, the method of controlling the equipment can follow different scenarios. Some of the most common control approaches include running the generator constantly, generating only when the electrical load of the building demands it, or generating only when the waste heat can be utilized. This last option, sometimes called thermal load following, can be advantageous depending on the economics.

Different processes result in different temperatures in the waste heat that they produce. Much of the waste heat from an engine-driven generator is from either the engine cooling system or from the exhaust. Turbine generators are similar but almost all the heat is from the exhaust. The exhaust heat is often at a much higher temperature and may allow for a double-effect absorption chiller to be used. If only lower temperature heat is available, single-effect absorption chillers may be most appropriate. Low temperature heat recovery can be more effective and utilize a greater fraction of the waste heat available from a generator.

Most heat recovery systems use a heat recovery steam generator or some other intermediate heat transfer device to take the heat from the waste heat fluid stream and make it available to the absorption chiller. The use of an intermediate heat exchanger decreases the effectiveness of the waste heat recovery and decreases the operating temperatures. Some less common alternative approaches overcome these issues such as absorption chillers that directly use the exhaust stream from a turbine generator or those that use a high temperature heat transfer fluid directly.

Making the most out of recovering heat from engine chiller

Vapor compression chillers driven directly by engines create heat that can be recovered for other processes such as heating or water heating. The heat primarily comes from both cooling the engine, also called jacket heat, and from the exhaust system. Additional heat can be recovered from the oil system. Most heat recovery systems use forced water through a jacket heat exchanger and exhaust heat exchanger. The engine-coolant pump supplied with the engine chiller may not have sufficient power to be used in a heat recovery application. Often the pump will need to be changed unless specifically sized for heat recovery applications. When recovering heat from engine exhaust a diverter valve should be added for times when heat recovery is not needed, this prevents boiling of the fluid when the heat is not needed by maintaining some flow through the exhaust heat exchanger.

Ebullient cooling systems are another option for engine-driven heat recovery systems. In ebullient cooling systems, the heat from engine itself helps propel the water through the heat recovery circuit reducing or eliminating the need for a pump. A system using ebullient in combination with a pump can also be cost effective.

The exhaust system used by an engine chiller does impact the performance of the engine. The additional back pressure caused by heat recovery equipment in the exhaust stream can reduce the power and efficiency of the engine.

Recommended mechanical room design with thermal chillers

Mechanical rooms used for chilled water systems can be complex, housing large equipment, piping, valves, controls, and control systems. The complexity when thermal chillers are used in the mechanical room is often greater than a mechanical room with electric chillers and care should be taken in the detailed design. One practice that is

similar for electric and thermal chillers is to allow for sufficient room in the mechanical room to pull the tubes from the heat exchanger bundle for cleaning and service.

When incorporating an engine-driven chiller in a mechanical room additional issues should be considered. Since engine vibration and sound needs to be controlled, it is important to dampen the transmission of both to the rest of the building. Using sound and vibration abatement techniques for all connections, hangers and supports is recommended with engine chillers. For example, gas supply lines, should include a flexible connector that will diminish the transmission of sound and vibration to the gas supply piping from the building. The mounts for the engine chiller should also be chosen to minimize vibration and sound by using vibration isolator mounts.

Other issues related to engine-driven chillers in the mechanical room include heat removal. Even engine- driven chillers that have heat recovery still produce more heat that is released into the mechanical room than other types of chillers. Ventilation rates for the mechanical room should be high enough to remove this heat with no more than a 15 °F or 20 °F temperature rise across the outside of the chillers. In addition, air flow should be along the length the chillers to maximize heat transfer to the ventilation air.

Starting the engine chillers is usually performed by an electric starter motor similar to the starter for a truck or automobile engine. To allow starting of the engine during power outages, batteries can be used to power the starter motor. An alternative to a starter motor is using compressed air. If the mechanical room already produces compressed air, such as for a hospital or laboratory environment, it may be cost effective to start the engine chiller using that method instead.

Absorption chillers have their own unique requirements in the mechanical room. For buildings with both absorption and vapor compression chillers care must be considered for complying with ASHRAE Standard 15, Safety Standard for Refrigeration Systems due to the presence of refrigerants in the proximity of a flame. Both isolating the chillers and monitoring refrigerant leaks may be required.

Other issues related to absorption chillers in the mechanical room include level installation and insulation. Due to the process used in an absorption chiller, it is important that it be mounted level in the mechanical room. A slight tilt can reduce the effectiveness of the process and impact the capacity of the chiller. The use of insulation on the exterior of an absorption chiller is important to offer protection against crystallization during power outages. Both hot and cold surfaces of the chiller should be insulated.

The exhaust systems from engine-driven chillers and from direct-fired absorption chillers have some special requirements in the mechanical room. Due to the heat of the exhaust from an engine chiller and to a lesser extent from an absorption chiller, thermal expansion of over 1 percent can occur. This thermal expansion in the exhaust system means that expansion joints should be specified. In addition, the routing of the exhaust ducts and pipes and the hangers used to support the exhaust system must be specified to not cause stress on the components during thermal expansion and contraction.

Another issue with exhaust piping is the management of condensate within the exhaust system. The system should be designed to minimize the possible occurrence of water condensation, but start up and shut down of the engine or absorption chiller mean that the system is still likely to experience some level of condensation. To prevent this from damaging the chiller, piping that includes horizontal runs should include water traps to remove condensation and should be sloped away from the chiller to prevent condensate from entering the chiller. This is especially important with engine-driven chillers.

If a single flue stack is used in the exhaust system for multiple engine-driven or direct-fired absorption chillers, a damper should be included to prevent back flow of the exhaust gases into the other chillers.

For engine chillers, it is important to monitor the back pressure in the exhaust system. Exhaust system back pressure should be measured close to the outlet flange on the engine but to obtain an accurate reading a straight length of three to five pipe diameters should be included prior to where the measurement is taken.

6.2 Operation Best Practices

6.2.1 Recommended Maintenance to Prolong Life of Engine Chillers

Regular maintenance can prolong the life of engine chillers. The manufacturer of the engine chiller will provide specific schedule and guidelines of the maintenance. In addition, other general recommendations can be followed to help lengthen the lifetime of the engine-driven chiller.

For engine chillers, to minimize how often maintenance is required, the engine chiller can be outfitted with large oil sumps, platinum tipped spark plugs, and high durability valve seats. For extended shutdowns, such as during the winter, electric oil heaters can be used to keep the oil from deteriorating. The interval for service for engine chillers varies depending on the cleanliness of the combustion air in the mechanical room. Air quality measurements should be considered for mechanical room ventilation intakes. In addition, the number of times the engine is started and stopped, especially from a cold start, can directly impact the frequency of the service. An oil analysis can help identify how often oil changes and other maintenance are required.

Engine chillers, like any kind of chiller, contain large heat exchangers and are prone to fouling. Fouling is when minerals dissolved in the fluid precipitate out of solution and get built up on the heat exchanger surfaces. Fouling reduces the effectiveness of the heat exchanger and the overall capacity and efficiency of the chiller. Routine cleaning of the heat exchanger tube bundles may be necessary to remove the fouling built up. In addition, water treatment options should be considered to prevent or minimize fouling.

Recommended maintenance to prolong life of absorption chillers

Some absorption chillers have operated successfully for very long lives. While there is no method to guarantee a long life on a large and complex piece of machinery like an absorption chiller, some specific recommendations can be followed to make the life as

long as possible. The manufacturer of the absorption chiller will provide specific schedule and guidelines of the maintenance. One of the most important aspects of maintenance is to remove built up gases from the absorption process by regularly purging the chiller. Air leakage into absorption chillers is a most common cause of crystallization and purging can remove these gases. Other reasons for crystallization are low temperature cooling water and electric power failures. Crystallization of the absorption fluid does not harm the machine but is usually a sign of problems.

Absorption chillers, like any kind of chiller contain large heat exchangers and are prone to fouling. Fouling is when minerals dissolved in the fluid precipitate out of solution and get built up on the heat exchanger surfaces. Fouling reduces the effectiveness of the heat exchanger and the overall capacity and efficiency of the chiller. Routine cleaning of the heat exchanger tube bundles may be necessary to remove the fouling built up. In addition, water treatment options should be considered to prevent or minimize fouling.

Regular operating conditions monitoring of gas and thermal chillers

For absorption and engine-driven chillers, one of the most important aspects of their operation and maintenance is regular monitoring. Both the operating conditions and the fluid chemistry are important to these types of chillers.

Remote monitoring of the operating conditions of the chiller can provide the building operator with information about its performance and can help to spot problems before they get out of hand. The operating conditions to monitor include the chilled water and condenser water supply and return temperatures along with the flow rate. These are standard items to monitor on any type of chiller. In addition, for engine chillers with heat recovery, the hot water being supplied should be similarly monitored. For absorption, the hot water being provided to the chiller should be monitored. Many other monitoring points should be considered for engine-driven and absorption chillers in order to ensure proper operation such as fluid temperatures at different points in the absorption cycle and the speed of the engine and backpressure from the exhaust system. At times, monitoring the conditions of various components within the chiller can indicate how they are performing. The manufacturers will often provide suggested points to monitor. Remote monitoring makes review of the data easier from the building operator office and often facilitates analysis of this data more automatically by putting the operating conditions on a single computer display, and by storing data from previous times.

For absorption chillers that operate using steam from another source, such as an electric power generator with heat recovery, the steam entering the chiller needs to be controlled. The pressure of the steam can have a direct impact on the longevity of any corrosion inhibitors included. Lower pressure steam takes longer to breakdown the corrosion inhibitors compared to higher pressure steam. In addition, the quality of the steam is important for absorption chillers. The quality is a measure of the mixture of steam and liquid water in a saturated steam environment. The lower the quality, the less heat content the steam contains and the more likely maintenance problems will develop.

It is important to monitor the chemistry of an absorption chiller during operation. The solution chemistry should be monitored per the manufacturer's recommendations. If possible, corrosion inhibitors should be employed to reduce chemical degradation of steel and other surfaces within the chiller exposed to the solution. Surfactants have been used with some absorption chillers to enhance the heat transfer characteristics of the fluid as it passes through the heat exchangers. In addition, water quality or hardness can impact absorption chiller operation and fouling of the heat exchangers. Due to this, water that includes dissolved carbonates, such as from aquifers with limestone beds, should be treated prior to use. Another issue with absorption chillers is how complete was the combustion. To reduce certain pollutants, the mixture of air and natural gas for the combustion should be monitored. Adjustment of the amount of air may be required after reviewing the results from testing the flue gases produced.

For engine chillers, the lubricating oil should be tested regularly to help monitor the physical conditions of the engine. The lubricating oil, since it flows through the engine, serves as a great way to assess the condition of the engine and the combustion process. In addition, the engine cooling water, for either a pumped closed loop system or an ebullient system should be regularly monitored for its chemical composition.

The building operator should also stay aware of changes to the utility rate structures especially for time-of-use rate structures. Often the economics of an absorption chiller are based on avoiding demand charges during certain portions of the day and certain months of the year. If these times change, the operating sequence of controls should also change. While utility rate structures do not change often, missing when they change can cause absorption and engine-driven chillers to operate in a manner that is not cost effective.

Recommended operation of engine chillers

Because the engine in engine-driven chillers is considered a stationary engine, it falls under the government requirements for emissions. Many different technologies for monitoring and controlling emissions are available for engines, and the operator of an engine-driven chiller should become familiar with not only those installed, but also other technology solutions in case they are needed. One option to reduce NOx emissions is to run the engine-driven chiller with an excess of combustion air. This is also called a lean-burn cycle. In addition, flue gas recirculation, where some of the gas from the exhaust system is fed into the combustion air stream can reduce NOx emissions.

Engine chillers can modulate capacity by running at different engine speeds but when the load drops below the lowest allowable engine speed, the engine must cycle on and off to meet the load. Engine cycling is hard on the engine, the starter, the oil, and other components so it is best if avoided. One problem that makes engine cycling more possible is to have a small volume of chilled water being circulated in the building. Having just a few cooling coils with similar cooling profiles contributes to the problem of a small amount of chilled water causing frequent engine cycling.

The building operator depends on either a control system or the controls on the individual mechanical room components, such as chillers, to provide services to the building. Manually operated chilled water plants with both electric and thermal chillers need to be carefully managed so that peak demands are avoided. If they are not, especially for locations with ratchets, the cost savings for demand avoidance may not really materialize. In addition, utilization of waste energy is critical for efficient operation. Building operators that manually operate the chillers should develop a cookbook to tell them how to manage each chiller in the plant.

Optimizing the control of chilled water plants can be difficult when all of the chillers are the same kind, but is made much more difficult when the chillers include both engine-driven chillers and electric chillers. Heat recovery makes optimization even more difficult. For a building operator, the value of optimization must be weighed against the value of ensuring that the service of providing chilled water to the building is not interrupted. Complaints are more likely to have a significant impact on the operator compared to efficient performance. Given this, getting building operators concerned about optimization is difficult.

Recommended operation of absorption chillers

Operators of absorption chillers in central chilled water plants have to remember some of the special operating characteristics of these chillers. For example, when starting gas or steam absorption chillers, they take longer to meet cooling load than electric chillers due to inherent thermal inertial, so the cooling load must be anticipated in advance. One advantage that direct-fired absorption chillers have is that they may be able to provide both chilled water and hot water. The ability to produce both chilled and hot water reduces the complexity of the seasonal change from heating to cooling and from cooling to heating.

During power outages that last more than a few minutes, absorption chillers can start to crystallize. To prevent crystallization during power outages for absorption chillers, either insulation should be used, or backup power should be used to provide a limited dilution cycle or full emergency power to the chiller. Some absorption chillers have a system that uses gravity to perform a limited dilution cycle so no backup power is required.

A direct-fired absorption chiller contains a boiler so it falls under the government requirements for regulating emissions. Many different technologies for monitoring and controlling emissions are available. Flue gas recirculation, where some of the gas from the exhaust system is fed into the combustion air stream, can reduce NOx emissions.

The building operator depends on either a control system or the controls on the individual mechanical room components, such as chillers, to provide services to the building. Manually operated chilled water plants with both electric and thermal chillers need to be carefully managed so that peak demands are avoided. If they are not, especially for locations with ratchets, the cost savings for demand avoidance may not really materialize. In addition, utilization of waste energy is critical for efficient

operation. Building operators that manually operate the chillers should develop a cookbook to tell them how to manage each chiller in the plant.

Optimizing the control of chilled water plants can be difficult when all of the chillers are the same kind but is made much more difficult when the chillers include both absorption chillers and electric chillers. Heat recovery makes optimization even more difficult. For a building operator, the value of optimization must be weighed against the value of ensuring that the service of providing chilled water to the building is not interrupted. Complaints are more likely to have a significant impact on the operator compared to efficient performance. Given this, getting building operators concerned about optimization is difficult.

CHAPTER 7:
Areas of Improvement

The overall experience of all the gas cooling customers interviewed ranged from "good" to "excellent", and that all of them would choose gas cooling again because they have no regrets. A copy of the survey given to customers is found in Appendix D.

The gas cooling customers are using the full range of gas and thermal cooling technologies: natural gas-, hot water- and steam-heated absorption, and natural gas engine-, and steam turbine-driven chillers. Some of these chillers are being operated 24/7-365 and some are operated only during the peak periods of two summer months only.

All of the customers are using parallel configuration and operating gas cooling in a hybrid system incorporating multiple electric chillers. Whether gas and thermal chillers will be the lead chillers depends on the electric rate tariffs and gas cost: during the high electric rate periods gas and thermal chillers are the lead chillers, while electric chillers are the lead chillers during the low electric rate periods.

The gas cooling customers themselves are able to maintain the electric chillers. However, all gas and thermal chillers are being maintained by the respective manufacturer.

A summary of the issues raised by the customers of gas cooling, or the desirable improvements suggested by these customers in order to make gas cooling even economically more attractive compared to the electric chillers is as follows:

- Develop direct-fired absorption chillers that do not require weekly operation for a few hours to prevent the fear of developing air leaks that reduce the performance of the chiller. (The performance of electric chillers is not reduced even if they are kept dormant for many months.).
- Develop absorption chillers that will be as easy to maintain as the electric chillers. The absorption chillers currently have to be maintained by their manufacturers.
- Develop absorption chillers that will not cost more to maintain than the electric chillers.
- Improve absorption chiller so that it can be operated well even with colder condenser water temperature, just as electric chiller.
- Make hot water-heated absorption chillers less sensitive to hot-water temperature.
- Automate the purging of absorption chillers.
- Reduce the footprint of the absorption chiller to match the footprint of the electric chillers.

CHAPTER 8:
Conclusions and Recommendations

8.1 Conclusions

A wealth of information on engine driven and thermally fired chillers was gathered and made available in this document. It can serve as a stepping stone to initiate the development of an in depth design guide for engine driven and thermally fired chillers. Eventually, the information could be combined with CoolTools for an all- encompassing approach to developing a best practice set of tools and application guidelines for design and operation of energy efficient chilled water plants.

Individual sections of the scoping study serve more immediate purposes. The Decision Process can assist designers in the initial stages of development to select the best type of chilled water plant. The Best Practice Guide is a useful tool for designers and operators of chilled water plants. It provides additional guidance to designers considering gas driven or thermally fired chillers in their design.

Customer issues with current systems led to a thorough analysis of possible improvements to gas driven and thermally fired chiller systems. The Research and Development Guide, a product of this analysis, prioritizes areas of improvement to increase the economic viability of these systems.

8.1.1 Research and Development Guide

Primary recommendations from this scoping study stem from the analysis of future research potential. From a list of 25 areas for potential research, 5 main categories were created.

- Overall Efficiency Metrics for Building Plants with Power Generation, Heat Recovery, and Absorption Chillers
- Enhance Simulation Tools for Complex Engine and Absorption Chiller Configurations
- Control Options for Absorption Chillers in Central Chilled Water Plants
- Fault Detection and Diagnosis Models for Absorption and Engine Chillers with Maintenance Procedure Development
- Create Functional Performance Tests for Absorption and Engine Chiller Installations

A literature view was used in conjunction with direct customer suggestions to create a list of 25 potential areas of research. This list is found in Appendix E. The larger list of 25 areas for potential research was then broken down into 5 main categories. Each category is described below, along with background information, a research objective, specific tasks, and deliverables required to meet the objective.

8.1.2 Overall Efficiency Metrics for Building Plants with Power Generation, Heat Recovery, and Absorption Chillers

Objective

Develop overall efficiency metrics for plants combining power generation, heat recovery, and chillers including absorption, engine and electric chillers. By establishing standard overall efficiency metrics for more complex plant configurations, they can be more easily compared. Single point metrics such as kW/ton for chillers are good for understanding how specific pieces of equipment operate under design conditions. A similar metric could also be developed for entire chilled water plants including those with electric chillers or those with absorption and engine chillers. In addition, metrics that utilize multiple points of reference, such as IPLV, help characterize the expected performance of equipment on a seasonal or annual basis and may be useful for characterizing entire central plants since they often include multiple operating modes for different seasons and conditions. One of the goals of any metric is that it is simple to compute and understand and allows direct comparison between options faced by decision makers.

Background

It is difficult to describe the overall efficiency of plants combining power generation, heat recovery, and chillers including absorption, engine and electric chillers and compare them to the existing metrics describing more conventional chilled water plants. While chillers, pumps, cooling towers and other pieces of plant equipment are individually rated for efficiency or effectiveness, no common rating scheme has emerged for rating entire chilled water plants. When metrics are applied to central plants, they may not be at the same operating conditions since no standard is available. Current metrics for generator efficiency or chiller efficiency do not allow direct comparison of plants with multiple outputs such as electricity and chilled water and hot water.

Tasks

- Characterize current central plant equipment metrics.
- Examine previous efforts to create central plant performance metrics.
- Interview stakeholders to understand metric requirements.
- Summarize metric requirements and compute examples to illustrate its application.
- Create draft single point "design condition" metric for central plants with electric, absorption and/or engine chillers along with pumps, towers, boilers, generators, and heat recovery equipment.
- Perform simulations to confirm seasonal weighting of multiple point metric rating conditions.

- Create draft multiple point "seasonal" metric for central plants with electric, absorption and/or engine chillers along with pumps, towers, boiler, generators, and heat recovery equipment.
- Summarize feedback from stakeholders on single and multiple point metrics.
- Revise and publish single and multiple point metrics.
- Draft and propose a standard that computes the single and multiple point metric and submit to national standards organization.
- Provide support for selected national standards organization in pursuit to publish standard that computes the single and multiple point metric.

Deliverables

- Summary of current central plant equipment metrics with annotated bibliography.
- Summary of previous efforts to create central plant performance metrics with annotated bibliography.
- 1a. Draft list of interview questions for stakeholders to understand metric requirements.
- 1b. List of potential interviewees that are stakeholders related to establishing a metric for overall performance of building plants with power generation, heat recovery, and absorption chillers including those of competing interests.
- 1c. Summary of responses from interviews including the most common points raised by multiple stakeholders.
- 2a. Provide a list of metric goals and requirements with explanations.
- 2b. Provide examples of various plant configurations and how the metrics would be computed for each example configuration.
- Draft metric methodology and calculations necessary along with summary of approach for single point metric reflecting design conditions.
- For a variety of climates, compute the relative importance of various energy flows into and out of the central plant and compute how the impact at selected rating conditions reflect groups of hours of operation.
- Draft metric methodology and calculations necessary along with summary of approach for multiple point metric reflecting seasonal or annual conditions.
- 3a. Provide draft list of stakeholders based on interviewees plus additional people with interest and knowledge in the topic.

- 3b. Distribute metric methodologies to stakeholders with a debriefing questionnaire to encourage feedback. 8c. Provide report to summarize feedback received from stakeholders including issues raised by multiple stakeholders.
- 4a. Based on feedback, revise metric methodologies and redistribute to stakeholders with summary of changes. 10a. Identify national standards organizations that might be interested in establishing a standard to compute metrics.
- 5a. Draft metric methodologies in the form of a standard and propose to selected national standards organization.
- 5b. Provide periodic reports on support provided to national standards organization to establish metric standard.

8.1.3 Enhance Simulation Tools for Complex Engine and Absorption Chiller Configurations

Objective

Enhance building energy simulation software tools to better support the detailed performance and options of engine and absorption chillers, as well as complex configurations such as absorption chillers, as part of an on- site power generation system with heat recovery.

Background

Many different building energy simulation programs are used in the United States including eQUEST, VisualDOE, EnergyPlus, Trace 700, HAP, TRNSYS, and ESP-r. Most of these programs include ways that designers can simulate buildings with central plants including electric, engine and absorption chillers. Few of these programs can simulate the wide variety of configuration options available for these central plants when they include on-site power generation and heat recovery. In addition, the control requirements of these advanced configurations can be even more complex. It is unlikely that any building energy simulation program can model all of the possible configurations and control options. This means that deciding between options may not be possible when evaluating these plant configurations.

Tasks

- Catalog configuration options for central plants that include engine and absorption chillers along with control options.
- Assess current building energy simulation programs for their ability to simulate the catalog of configuration and control options.
- Form prioritized list of upgrades to simulation programs to fully support the catalog of configuration and control options.

- Develop algorithms and publish them for configurations and control options that are missing from building energy simulation programs.
- Contribute software development effort to upgrade critical building energy simulation programs so they can model the full catalog of configuration and control options.
- Document for users how to model the catalog of configuration and control options in selected building energy simulation programs.

Deliverables

- 1a. Provide an annotated bibliography on plant configurations that include engine and absorption chillers in addition to standard electric chillers.
- 1b. Catalog the configuration options and control options for central plants that include engine and absorption chillers specifically for understanding the range of simulation models needed.
- 2a. Document the current building energy simulation programs used by designers for assessing central plants. 2b. Assess the capability of selected building energy simulation programs to simulate the full catalog of configuration and control options.
- 3a. Recommend a list of priority upgrades to the simulation programs in order to fully support the full catalog of configuration and control options.
- 3b. For those simulation programs that are proprietary, submit the recommended upgrades to the program vendors.
- Create and document the algorithms for selected configuration and control options that are missing from building energy simulation programs.
- For those simulation programs where source code can be contributed, develop upgrades to support selected configuration and control options that are missing.
- Provide general and program specific documentation to provide to building designers and simulation users to help create models of their buildings with complex engine and absorption chiller configurations and controls.

8.1.4 Control Options for Absorption Chillers in Central Chilled Water Plants

Objective

Explore control and supervisory control options for absorption chillers in chilled water plants alone or when coupled with electric chillers or with power generation and heat recovery, and create example control sequences and point lists and how they should be integrated into building automation systems.

Background

Typical central chilled water plants using electric chillers require supervisory controls in order to achieve near optimal operation but the added complexity of absorption chillers, heat recovery and power generation equipment makes achieving optimal and near optimal control even more difficult. Several researchers (see references) have begun to explore options on how the controls should work including fault detection and diagnosis, the impact of TOU and RTP utility rates. Issues include (based on Maor 2008) sensitivity to simplifying assumptions, improvements in equipment models, effect of uncertainties, refinements to objective function, time step of simulation, improvement in definition of optimal control, alternative near optimal strategies, continuous control, and prototype implementation.

Tasks

- Perform a literature review of central plant controls when applied to plants with absorption chillers especially when used in conjunction with power generation and heat recovery.
- Examine knowledge gaps in literature and summarize. Recommend specific tasks to overcome these gaps.
- Select range of plant configurations for testing supervisor control algorithms and range of buildings.
- Select metrics for best algorithm including overall energy cost, maintenance, usability, and adaptability.
- Test control options including performing sensitivity analysis of major parameters and assess established metrics.
- Implement control as a prototype on actual building and monitor results.

Deliverables

- Summary and annotated bibliography of literature related to controls for absorption chillers in central chilled water plants.
- Produce a knowledge gap report based on areas identified in the literature as well as interviews of experts. Include recommendations for tasks.
- 1a. Produce a building selection report that identifies buildings and the parameters for a building energy model to represent these typical buildings.
- 1b. Produce a plant configurations report that identifies various configurations of absorption chillers along with electric chillers, power generation equipment and heat recovery.
- Write a report describing evaluation metrics to assess the value of various algorithms.

- Document the selected control options and how they were tested and the results of the testing including sensitivity testing.
- Identify and implement selected control options in an actual building and monitor.

8.1.5 Fault Detection and Diagnosis Models for Absorption and Engine Chillers with Maintenance Procedure Development

Objective

Create fault detection and diagnosis model for absorption chillers and engine driven chillers as well as condition based maintenance procedures.

Background

Automated fault detection is based on monitoring the performance of equipment in a central plant and determining when it is operating outside of normal ranges. After detection of a fault, the automated system would diagnose the possible reasons for the fault and alert the operator. Depending on the severity of the fault, modify the operation of the equipment, possibly shutting down portions of the central plant. The fundamental approach to fault detection is the comparison between monitored data from the central plant to a computerized model of the interconnected components. Comparing actual central plant monitored data to a computerized model of the interconnected components and looking for variances is the fundamental approach of fault detection. This approach has been applied to electric chillers but not to absorption chillers or engine driven chillers, which have different operating characteristics.

Tasks

- Literature search for software models for absorption and engine driven chillers. This should include looking at major building energy simulation programs in use around the world for the basis of these specific models.
- Classify and rate all models. Based on models found in literature search, classify the models based on Sreedharan 2001 approach for accuracy, calibration effort, training data requirements, computational scheme, and physical relevance of parameters. Recommend specific models to evaluate.
- Monitor absorption and engine-driven chillers in operation over a range of loads and conditions either in the laboratory or in the field or both.
- Using monitored data from actual buildings, exercise the models of the absorption and engine chillers to see if faults are detected including false positive faults and false negatives.
- Implement as a prototype the best algorithms and connect to an operating chilled water plant containing absorption and engine chillers as test.

Deliverables

- Annotated bibliography and summary of results from literature search of software models for absorption and engine driven chillers.
- Provide a report on the models found and classify and rate the relative values of each model including recommendations.
- Data summary report of the major parameters affecting the overall performance of the chillers based on monitoring the chillers either in the laboratory, in the field, or both.
- Report the results of using monitored data as a practice set of the fault detection algorithms.
- Report on long term testing of prototype fault detection and diagnosis software on actual chillers in selected buildings.

8.1.7 Create Functional Performance Tests for Absorption and Engine Chiller Installations

Objective

Create functional performance tests for absorption and engine chiller installations for a variety of configurations.

Background

According to ASHRAE Guideline 1, functional performance testing is defined as "the process of determining the ability of the HVAC system to deliver heating, ventilating and air-conditioning services in accordance with the final design intent." The tests are specific for each type of equipment and include the test prerequisites, list of points to monitor, sensor calibration checks, device calibration checks, and test procedures. The Portland Energy Conservation Inc website shows tests for a variety of plant equipment including functional tests for chillers with 61 specific test steps. These tests include false loading the chillers to see how they perform under a variety of conditions.

Tasks

- Perform literature search on existing chiller functional performance testing procedures including those recommended by manufacturers.
- Create functional tests including detailed procedures for engine-driven chillers.
- Create functional tests including detailed procedures for absorption chillers.
- Create functional tests for complex plants that include multiple chillers, either engine-driven or absorption chillers, and electric chillers or power generators with heat recovery.
- Distribute functional performance tests to commissioning organizations and standards organizations such as ASHRAE.

Deliverables

- Annotated bibliography and summary of results from literature search of functional tests for chillers.
- 1a. Report describing the derivation of the functional test procedures for engine-driven chillers.
- 1b. Functional test procedures for engine-driven chillers.
- 2a. Report describing the derivation of the functional test procedures for absorption chillers. 3b. Functional test procedures for absorption chillers.
- 3a. Report describing the derivation of the functional test procedures for complex plants that include multiple chillers, include either engine-driven or absorption chillers, and electric chillers or power generators with heat recovery.
- 3b. Functional test procedures for complex plants that include multiple chillers, include either engine-driven or absorption chillers, and electric chillers or power generators with heat recovery.
- 4a. Plan for distributing functional performance tests.
- 4b. Report describing availability of created functional performance tests.

8.1.8 Final Outreach Plan

Leveraging existing energy efficiency programs and resources that provide information to design professionals and facility owners is probably one of the most cost effective methods to provide information. For this reason, the focus of this section is how to integrate the results of the project into appropriate existing energy efficiency programs and resources. Clearly, energy efficiency programs that are based in California are the highest priority, but national programs were also investigated. Programs that focus on regions outside of California were not targeted. The energy efficiency programs that may be the easiest to provide this information to are those that are managed by PG&E or are part of work funded by the Public Interest Energy Research program which is part of Energy Commission's Research Development and Demonstration (RD&D) Division. Existing energy efficiency programs were reviewed and those with a potential to include the materials, especially the best practices, are highlighted.

A second method is direct contact with design professionals and facility owners. For facility owners of gas and thermally driven chilled water plants, contacts through the manufacturers and service firms may be possible. Mailing lists from the manufacturers that are targeted to buildings that have purchased absorption and engine driven chillers as well as service firms that provide service to these systems, may be available to distribute the information gathered and developed during the Gas Cooling Scoping Study and subsequent related studies. For building designers, organizations that represent designers could also have mailing lists that could be purchased in order to directly provide information to HVAC design professionals. Unfortunately, direct

contact means sending literature to individuals through the mail or email and both methods are just as likely to result in being discarded as junk mail as being read. Even if read by the intended audience, the timing of providing the information versus when the person may need it, is likely to be poor. In many ways, providing a resource that can be found using an internet search engine or a link from a common site is a superior approach to sending out direct mail to design professionals and facility owners.

APPENDIX A:
Existing Programs

The web sites shown in Appendix A were searched for energy efficiency programs and resources related to the design and operation of chilled water plants. A summary of the information obtained is provided below in four categories: PG&E, PIER, California, and National.

PG&E

PG&E's web site was scanned under the "For My Business" side looking at various programs under "Energy Savings and Rebates" and found both programs operated directly by PG&E and links to programs that PG&E helps to support.

Pacific Energy Center

Energy Training Center-Stockton

Retrocommissioning (RCx) Program

Non Residential Retrofit (NRR) also known statewide as Standard Performance Contracting – SPC

Non Residential New Construction also known statewide as Savings by Design. Part of this program is the Energy Design Resources program.

Energy Efficiency for Trade Professionals

High Tech – Central Plant

California Multifamily New Homes Program

Both the Pacific Energy Center and the Energy Training Center in Stockton may be best utilized for their training facilities if a training program results from the project. The Retrocommissioning and Non-Residential Retrofit programs are well suited to help convey information to those operating and maintaining existing buildings and who are interested in making those buildings more energy efficient.

The Non-Residential New Construction program, which PG&E and other utilities manage, includes the http://www.savingsbydesign.com web site which "offers service and incentives to help decision makers raise energy performance to a top priority." The http://www.energydesignresources.com web site is also part of this program which "offers a valuable palette of decision making tools and resources that help make it easier to design, build and operate more energy-efficient buildings in California." These two web sites are possible avenues to publish the reports from this work. In addition, they provide a venue for training.

The Energy Efficiency for Trade Professionals is aimed at third party vendors who sell, market, install or manufacture energy-efficient products. Included in this web site are resources for trade professionals which could also include materials related to this project.

Aimed at data centers, the PG&E High Tech-Central Plant program provides advice on increasing energy efficiency. This program could provide additional advice on avoiding the use of electric chiller solutions and avoiding increasing electric demand by using absorption and engine chillers for these crucial applications.

Another targeted audience is the California Multifamiliy New Homes Program sponsored by PG&E and operating by Herschong Mahone Group, which includes a focus on high efficiency space heating and cooling equipment. It includes financial incentives and design assistance.

PIER

- Based on the PIER web site showing the portfolio of projects from 1997 to 2007, several programs were identified as related to this project
- California CHP Market Assessment
- Performance Testing Protocols and a Database for Distributed Generation Systems
- Realistic Application and AQ Implications of DG-CHP
- Building Design Advisor
- Conceptual Design Energy Analysis Tool/Green Building Studio
- Commercial Building Commissioning R&D
- An Integrated Anti-Fouling Technology for Energy Efficient Chillers
- Commercial Cooling and Heating Pump Applications which specifically looked at absorption chillers
- DER Technologies Assessment and Databases
- California Distributed Energy Resources Guide at http://www.energy.ca.gov/distgen/
- Evaluation of Policy Impacts on the Economic Viability from a Project Owner's Perspective of California Based Distributed Generation/Combined Heat and Power
- Integrated Cooling and Heating Module Development

- Pacific Region Combined Heat and Power Application Center at http://www.chpcenterpr.org
- Feasibility of Solar-Fired, Compressor-Assisted Absorption Chillers
- Design and Optimization of Solar Absorption Chillers
- Large HVAC Building Survey Information as part of Integrated Energy Systems: Productivity & Building Science

Of these, the California Distributed Energy Resources and Pacific Region Combined Heat and Power Application Center show the most promise as avenues to distribute information. In addition, the Large HVAC Building Survey is based on list of buildings over 100,000 square feet and may be a source of information to directly contact building owners and operators.

California

Southern California Edison has a Self-Generation Incentive Program which includes gas-turbines and IC engines that might be appropriate to use with heat recovery and absorption chillers. In addition, SCE operates the Customer Technology Application Center that provides training.

San Diego Gas and Electric offers on-line training as well as training at the San Diego Energy Resource Center including training for Building Operator Certification.

Southern California Gas Company has an energy efficiency program for large business customers as well as a self-generation incentive. They also operate an Energy Resources Center and have a web page directly discussing gas cooling with a link to http://www.gasairconditioning.org/

The California Commissioning Collaborative has an extensive library of articles on all aspects of building commissioning including ten items specific to central plant commissioning. It is possible that the materials developed in this project and future projects could be adapted for use in commissioning gas and thermal chilled water system.

While the focus of the Pacific Region CHP Application Center is on combined heat and power systems, the discussion of the use of absorption chillers would certainly be pertinent. Links to reports on this site would be a good method of providing information to building designers and operators.

The Flex Your Power web site includes best practices guides and project guides for typical commercial buildings such as hotels and offices and, in addition, includes product guides on chillers that could be expanded to include engine-driven and absorption chillers.

The California Measurement Advisory Council (CALMAC) maintains a database of reports which includes reports on chillers. While the organization is focused on measurement, some of the information gathered during this research project may be useful.

The California Green Building Initiative, California Climate Change Portal and the Green California are all state of California government web sites which include links to a variety of programs that could possibly have references to the project.

Energy Design Resources is an extensive web site that offers "valuable palette of decision-making tools and resources that help make it easier to design, build and operate more energy-efficient buildings in California." Included in the web site are specific resources for chilled water plant design such as "Design Briefs: Chiller Plant Efficiency" and "Design Briefs: Design Details". It is a web site packed with design information and would be a good location to place information gathered and developed during this project. In addition, the web site links to training opportunities include both classes and webinars and online courses.

Savings by Design is a web site that "provides the resources you need to make the right choices at each step in the design of new commercial buildings." It is focused on incentives offered by various California utilities for both owners of new buildings as well as design teams. In addition, it offers awards to recognize highperformance buildings in California. It has two types of design assistance including the Whole Building Approach which uses energy simulation modeling and the Systems Approach.

National

The American Society of Heating, Refrigeration, and Air-Conditioning Engineers published the multivolume ASHRAE Handbook which is one of the most commonly used publications for mechanical design in the industry. It includes chapters on chillers and chilled water systems which could be enhanced by including materials gathered and developed as part of this research project. In addition, training programs are provided by ASHRAE (both online and in person), was well as extensive conferences twice per year which are operated in conjunction with the Air-Conditioning, Heating and Refrigeration Institute (AHRI). Much of the work of ASHRAE is based on volunteer work by members of technical committees representing different facets of the industry, including TC 8.3 Absorption and Heat Operated Machines, TC 1.10 Cogeneration Systems, TC 6.1 Hydronic and Steam Equipment and Systems, TC 6.2 District Energy, TC 6.10 Fuels and Combustion, TC 8.1 Positive Displacement, and TC 8.2 Centrifugal Machines. The ASHRAE Journal is a monthly publication and provides articles on the design of mechanical systems in buildings.

The Association of Energy Engineers provides training for topics in the HVAC industry. One of the publications it provides is the Cogeneration and Distributed Generation

Journal that may include topics related to heat operated chillers. They organize a number of conferences including the World Energy Engineering Congress.

The Building Owners and Managers Association International provides classes and webinars on building operation and would be a logical place for a building operator to look for information on operating and maintaining absorption and engine-driven chillers.

The Building Operator Certification "is a nationally recognized training and certification program for building operators offering improved job skills and more comfortable, energy-efficient facilities." The focus of the organization is providing certification training classes and exams for building operators. Several courses deal with HVAC including: HVAC Systems and Controls, HVAC Troubleshooting & Maintenance, and HVAC Controls and Optimization. Materials from the project could be included in one of these courses although they are focused on preparing individuals for the certification exams.

The Whole Building Design Guide web site contains a lot of information about building design and operation "to create a successful high-performance building by applying an integrated design and team approach to the project during the planning and programming phases." The web site includes many links and a significant amount of original content. It is possible that the content about absorption chillers and engine-driven chillers developed during the project could be added to certain pages of the web site, which is part of the National Institute of Building Sciences.

The Gas-Fired Air Conditioning Equipment web site (http://www.gasairconditioning.org/) is sponsored by the Energy Solution Center, which is a 501(c)6 organization of utilities and equipment vendors. Both web sites contain pages describing absorption and engine-driven chillers, including links to specific manufacturer's chillers. The focus of the gasairconditioning.org web site is so closely assigned with the research and information gathered by the project that it is an obvious choice of how to distribute the information. The resources included in the web sites are articles, brochures, case studies, product sheets and tools.

The U.S. Department of Energy Distributed Energy and U.S. Environmental Protection Agency Combined Heat and Power Partnership web sites both provide extensive information about power generation equipment for buildings along with heat recovery. They briefly discuss using the recovered heat for absorption chillers and could benefit from the material developed during the project, but it is not clear if they would use the material since it was not developed by those agencies. Related web sites by NREL and ORNL are similar.

The New Buildings Institute sponsored the development of guidelines on absorption chillers and engine- driven chillers and those guidelines are available on their web site.

The guides are from 1998 and were developed by GARD Analytics and have not been updated since.

The Gas Technology Institute published "Natural Gas-Fired Cooling Technologies and Economics" by Punwani, Ryan, and Kalensky, a text book on absorption and engine chillers with extensive information. The Gas Technology Institute performs research in this area. They provide education and training, both in the classroom and online, but focused on natural gas extraction, distribution and delivery rather than end-use.

A UK web site, the Combined Heat and Power Association, provides information about combined heat and power as well as news and case studies. The web site mentions absorption as part of combined cooling, heat and power but provides little information on the topic.

The Functional Testing and Design Guides include information about how to provide functional tests for chiller installations. This list could be expanded for engine-driven and absorption chillers. It includes sample forms as well as checklists and tips on testing procedures.

Manufacturers of absorption chillers and engine-driven chillers provide detailed information on their products, including catalog information, service guides, application manuals and other product literature. The manufacturers are unlikely to incorporate information generated by this project since they are focused on the equipment that they sell and how it can be differentiated in the market.

Outreach Recommendations

The most effective approach to distribute the information generated from the project would be to contact all of the energy efficiency programs identified and work with each one individually to distribute the information from the project customized for each program. Unfortunately, the time and resources to follow such a broad strategy are not usually available. Instead, the following recommendations highlight an approach:

Provide all materials to the authors of the revision to the CoolTools Chilled Water Plant and Specification Guide to expand the sections on absorption and engine chillers in the Chilled Water Plant Equipment and Hydronic Distribution Systems chapters. could add a new dimension to that web site and help those looking to provide cooling as well as power and heat to their buildings.

The http://www.gasairconditioning.org/ web site is another location where links to the materials developed for this project would be ideally located.

Working with the operators of the Flex Your Power web site could be very useful so that reports produced for this project could be directly posted or linked.

Members of the ASHRAE Technical Committees should receive copies of selected materials generated by this project.

If a follow-on project is initiated, some additional work can produce materials suitable for other applications:

Training slides and training script on absorption and engine-driven chiller design and operation

Web-based training

Absorption and engine-driven chiller design and operation guides

A research paper summarizing the results of the project for possible presentation at an ASHRAE conference

The training materials, specifically, could be used in several different forums including the training facilities operated by PG&E, other California utilities, and other programs that feature training. The research paper would allow future researchers to locate the information gathered and developed during the project to make further advancements more effective.

APPENDIX B:
Gas Cooling Design Process

Introduction

The contained annotated bibliography uses the following key for the portions after the annotation summary of the document shown in brackets.

Key Meaning

Pages The number of pages in the document

EA Assessment of the equipment and applications goal on a scale of 1 to 5 where 1 has no relevance and 5 is extremely relevant. This corresponds to "market intelligence identifying types of equipment and typical applications such as combined heat and power systems" from the workplan.

MS Assessment of the modeling and simulation goal on a scale of 1 to 5 where 1 has no relevance and 5 is extremely relevant. This corresponds to part of "best practice in equipment modeling, plant configuration, plant simulation and plant control optimization" from the workplan.

CC Assessment of the configuration and control goal on a scale of 1 to 5 where 1 has no relevance and 5 is extremely relevant. This corresponds to part of "best practice in equipment modeling, plant configuration, plant simulation and plant control optimization" from the workplan.

TDV Assessment of time dependent valuation (TDV) goal on a scale of 1 to 5 where 1 has no relevance and 5 is extremely relevant. This corresponds to "impact of CEC T24 2005 TDV on design" from the workplan.

FS Assessment of the fuel switching, supply and demand response goal on a scale of 1 to 5 where 1 has no relevance and 5 is extremely relevant. This corresponds to "fuel switching, fuel supply, and demand response." from the workplan.

Annotated Bibliography Sorted by Name

Aki, Hirohisa; Akinobu Murata. 2004. *A Fundamental Study on the Introduction of Natural Gas Cogeneration in Urban Commercial Building in China.* 20th Conference on Energy, Economy and Environment

The brief paper describes the possible use of building cooling, heating and power systems in China to reduce CO2 emissions. The article includes a simple mathematical model for CO2 reduction for the configuration. [Pages:4 EA:3 MS:3 CC:3 TDV:1 FS:1]

American Gas Association and American Gas Cooling Center. 1993. *Natural Gas Cooling Market Study - Executive Summary.*

The executive summary volume of a three volume report. Contains a marketing assessment for natural gas cooling. Describes how favorable the market is for gas cooling, what marketing actions are needed, strategic issues of competing with electric

cooling, how to reach key customers, overcoming cost issues, long term cost differences, reliability and service availability, research and development, market localization, and projected market size. [Pages:15 EA:3 MS:1 CC:1 TDV:1 FS:4]

American Gas Association and American Gas Cooling Center. 1993. *Natural Gas Cooling Market Study - Final Report Part 1 Summary Report.*

The summary report volume of a three volume report. Much of the report shown as slides. Contains a marketing assessment for natural gas cooling. Describes how favorable the market is for gas cooling, what marketing actions are needed, strategic issues of competing with electric cooling, how to reach key customers, overcoming cost issues, long term cost differences, reliability and service availability, research and development, market localization, and projected market size. [Pages:~40 EA:3 MS:1 CC:1 TDV:1 FS:4]

American Gas Association and American Gas Cooling Center. 1993. *Natural Gas Cooling Market Study - Final Report Part 2 Summary of Supporting Research and Analysis.*

The summary of supporting research and analysis volume of a three volume report. Much of the report shown as slides. Contains a marketing assessment for natural gas cooling. Describes how favorable the market is for gas cooling, what marketing actions are needed, strategic issues of competing with electric cooling, how to reach key customers, overcoming cost issues, long term cost differences, reliability and service availability, research and development, market localization, and projected market size. [Pages:~120 EA:3 MS:1 CC:1 TDV:1 FS:4]

American Gas Cooling Center. 1992. *Natural Gas Cooling Equipment Guide.*

Replaced by later edition. A comprehensive listing of all gas cooling equipment available at time of printing. Each particular piece of equipment by model number and manufacturer, has two page summary including key features, options, pictures of the equipment and equipment diagram. Sections on absorption systems, engine-driven systems, custom gas engine-driven systems, desiccant systems, as well as systems under development. [Pages:80 EA:5 MS:1 CC:2 TDV:1 FS:1]

American Gas Cooling Center. 1993. *Natural Gas Space Conditioning Segmentation Research and Product Opportunity Analysis.*

The marketing study looked at homeowners and segments them into urban educated, urban upscale, down home folks, and urban machos. The first part is titled segmentation research followed by opportunity analysis. Written in the format of marketing reports, much of the content is bullet listed paragraphs, tables and graphs. Results of a survey are included. [Pages:~50 EA:2 MS:1 CC:2 TDV:1 FS:2]

American Gas Cooling Center. 1994. *Applications Engineering Manual for Direct-Fired Absorption.*

An engineering manual for helping apply direct-fired absorption chillers to a building. The chapters include an overview of the technology, economics of gas cooling, system

design configurations, installation and maintenance. Includes discussion of control systems for absorption chillers and various system configurations. [Pages:48 EA:4 MS:2 CC:4 TDV:1 FS:2]

American Gas Cooling Center. 1996. *Application Engineering Manual for Engine-Driven Chillers.*

This very detailed engineering manual is focused on engine-driven chillers. Chapters include economics, system design, installation, operation and maintenance. Many technical details are included in the manual which is designed for engineers. [Pages:45 EA:5 MS:2 CC:4 TDV:1 FS:1]

American Gas Cooling Center. 1999. *Applications Engineering Manual for Engine-Driven Chillers, 2nd Edition.*

This second edition describes the use of engine-driven chillers as an alternative to electric chillers. Includes description of chillers products, applications and operation, market perspective, load shifting, and market potential. Additional section on new developments in engine-driven cooling and related technologies is included. [Pages:67 EA:5 MS:2 CC:4 TDV:1 FS:1]

American Gas Cooling Center. 1999. *Application Engineering Manual for Engine-Driven Commercial and Industrial Refrigeration Systems.*

Examines the use of refrigeration systems using engine-driven chillers across various industrial settings. Looks at various industrial markets by SIC code. Fundamentals of the engine-driven refrigeration equipment covers the controls and performance. Includes chapters on installation and operation, emissions, coolant systems and waste heat recovery, and economics. [Pages:120 EA:5 MS:2 CC:5 TDV:1 FS:2]

American Gas Cooling Center. 1999. *Applications Engineering Manual for Integrated Systems Design.*

Closely related to the Technology Transfer Workshop Workbook on Integrated Systems Design some pages refer to that other publication. Seems to include the same material as that other publication with some additional examples and explanations. [Pages:198 EA:5 MS:4 CC:4 TDV:1 FS:2]

American Gas Cooling Center. 1994. *Chiller Analysis for a Chicago Building: A Review of EPRI Chiller Report TR- 100537.*

The report is focused on refuting an EPRI report showing that gas-fired absorption chillers were not economically justified. The report uses several building energy simulation programs to show that absorption is cost effective. [Pages:~40 EA:3 MS:5 CC:2 TDV:1 FS:3]

American Gas Cooling Center. 2000. *CoolTimes.*

This newsletter was published by the American Gas Cooling Center from October 1992 through October 2000. Issues prior to 1992 may exist since that is considered volume 3. About 50 issues were published. Each issue is about 20 pages and includes news items on equipment and specific equipment installations of gas cooling. Some issues included background or design information on how to apply various gas cooling technologies. [Pages:~20 EA:4 MS:2 CC:3 TDV:1 FS:2]

American Gas Cooling Center. 1999. *Equipment Guide and Case Study Folio.*

The CD contains over 300 case studies of installations of gas cooling equipment. Each case study is two-pages of details on a specific building installing gas cooling including a photograph of the building and of the equipment room. Also included are over 100 descriptions from manufacturers of equipment related gas cooling. In addition, four short videos on gas cooling technology are included. [Pages:n/a EA:5 MS:1 CC:3 TDV:1 FS:1]

American Gas Cooling Center. 1996. *Gas Cooling Center Case Studies Folio, The.*

The report contains hundreds of case studies of installations of gas cooling equipment. The studies are organized into commercial/retail, education, government, health, hotels, industrial/laboratory, residential, restaurants, sports, and supermarkets. Each case study is two-pages of details on a specific building installing gas cooling including a photograph of the building and of the equipment room. [Pages:~200 EA:5 MS:1 CC:3 TDV:1 FS:1]

American Gas Cooling Center. 1994. *Gas Cooling Study: Does Gas Cooling Meet the Criteria of Integrated Resource Planning.*

The report is about 30 pages with the remainder being appendices and is divided into two main sections: analytic approach and benefit/cost analysis. The report looks at integrated resource planning, an offshoot of demand side management. Fourteen different equipment configurations are assessed incorporating six including gas cooling. The assessments include energy savings, CO2, SOx, Nox, as well as integrated resource planning tests for participants and society. [Pages:180 EA:2 MS:2 CC:2 TDV:1 FS:4]

American Gas Cooling Center. 1996. *GRI Commercial PAG Briefing - Natural Gas Air Conditioning, Dehumidification and Refrigeraiton Technology, Application and Future.*

The report includes two presentations and a paper report describing gas air conditioning. The paper is on natural gas air conditioning, dehumidification and refrigeration and focuses on the US and global markets for equipment/ [Pages:~60 EA:3 MS:1 CC:2 TDV:1 FS:2]

American Gas Cooling Center. 1994. *Natural Gas Cooling Applications & Equipment Resource Kit.*

Large listing of installation summaries of natural gas cooling equipment. The report is made up of two- page summaries of actual buildings that equipment is installed including some specific information on the building, the equipment, and the location. Sections include education, government, hospital and nursing home, manufacturing, office, retail, supermarkets, food service, hotels and motels. [Pages:~200 EA:5 MS:1 CC:3 TDV:1 FS:1]

American Gas Cooling Center. 1994. *Natural Gas Cooling Equipment Guide, 2nd Edition.*

Replaced by later edition. A comprehensive listing of all gas cooling equipment available at time of printing. Each particular piece of equipment by model number

and manufacturer, has two-page summary including key features, options, pictures of the equipment and equipment diagram. Sections on absorption systems, engine-driven systems, desiccant systems, as well as systems under development. [Pages:108 EA:5 MS:1 CC:2 TDV:1 FS:1]

American Gas Cooling Center. 1995. *Natural Gas Cooling Equipment Guide, 3rd Edition.*

Replaced by later edition. A comprehensive listing of all gas cooling equipment available at time of printing. Each particular piece of equipment by model number and manufacturer, has two-page summary including key features, options, pictures of the equipment and equipment diagram. Sections on absorption systems, absorption components, engine-driven systems, commercial and industrial refrigeration, engines and turbines, desiccant systems, desiccant components, as well as systems under development. [Pages:146 EA:5 MS:2 CC:3 TDV:1 FS:1]

American Gas Cooling Center. 1996. *Natural Gas Cooling Equipment Guide, 4th Edition.*

Replaced by later edition. A comprehensive listing of all gas cooling equipment available at time of printing. Each particular piece of equipment by model number and manufacturer, has two-page summary including key features, options, pictures of the equipment and equipment diagram. Sections on absorption systems, absorption components, engine-driven systems, commercial and industrial refrigeration, engines and turbines, desiccant systems, desiccant components, as well as systems under development. [Pages:160 EA:5 MS:2 CC:3 TDV:1 FS:1]

American Gas Cooling Center. 1998. *Natural Gas Cooling Equipment and Services Guide, Fifth Edition.*

A comprehensive listing of all gas cooling equipment available at time of printing. Each particular piece of equipment by model number and manufacturer, has two-page summary including key features, options, pictures of the equipment and equipment diagram. Sections on absorption systems, absorption components, engine-driven systems, commercial and industrial refrigeration, engines, desiccant systems, desiccant components, as well as systems under development. In addition, a new section on alternative energy financial services was added. [Pages:182 EA:5 MS:2 CC:3 TDV:1 FS:1]

American Gas Cooling Center. 1998. *Technology Transfer Workshop Workbook: Integrated Systems Design.*

The workbook for a course covering all common types of gas cooling including desiccants, absorption, engine-driven chillers in the context of integrated systems. The main sections include an overview of major HVAC systems, gas cooling technology, and various system configurations. A description of several case studies of a school, hospital and office building are included. System diagrams along with modeling assumptions for use with building energy simulation programs are included. [Pages:~200 EA:5 MS:4 CC:4 TDV:1 FS:1]

American Society of Heating, Refrigeration and Air Conditioning Engineers, Inc. 2006. *Absorption Cooling, Heating and Refrigeration Equipment (Chapter 41 of 2006 ASHRAE Handbook - Refrigeration).* Atlanta GA.

This chapter of the ASHRAE handbook on refrigeration is focused on absorption. The detailed description of the components in an absorption chiller is followed by detailed component diagrams for single-effect and double-effect chilers. Altenative plumbing arrangements are described and how they alter the cycle. The operation and maintenance of absorption chillers including operational controls and limit and safety controls is included. Residential sized ammonia-water absorption equipment is also described. [Pages:11 EA:4 MS:1 CC:4 TDV:1 FS:1]

American Society of Heating, Refrigeration and Air Conditioning Engineers, Inc. 1995. *Desiccant and Absorption Cooling.* Atlanta GA.

This is a collection of 10 papers on the desiccant and absorption cooling. Six of the papers are on absorption and they are titled: Hotel Room Air Conditioner Design Based on the Diffusion-Absorption Cycle, Transient Analysis and Design Model of a LiBr-H20 Absorber with Rotating Drums, Commercial Absorption Chiler Models for Evaluation of Control Strategies, Pinch-Point Analysis An Aid to Understanding the GAX Absorption Cycle, Simulation and Performance of an Ammonia-Water Absorption Heat Pump Based on the Generator Heat Exchange (GAX) Cycle, and Model of an Ammonia-Water Bubble Absorber. [Pages:112 EA:4 MS:4 CC:4 TDV:1 FS:1]

American Society of Heating, Refrigeration and Air Conditioning Engineers, Inc. 2000. *Engine-Driven Heating and Cooling Equipment (Chapter 47 of 2000 ASHRAE Systems and Equipment Handbook).* Atlanta GA.

Describes the components of engine-driven chillers and how they are rated and part load performance. Also describes maintenance and operation including a table of services needed at specific time intervals. Design and appllication issues such as noise and vibration, emissions and permitting, engine-room ventilation and combustion air requirements are included. Also describes smaller engine- driven air conditioners and heat pumps as well as refrigeration equipment. [Pages:11 EA:4 MS:1 CC:4 TDV:1 FS:1]

Andrews, J. W.; T. A. Butcher; R. W. Leigh; R. J. McDonald; B. L. Pierce. 1996. *Advanced Cogeneration and Absorption Chillers Potential for Service to Navy Bases.* BNL-63101

The report focuses on use of cogeneration and absorption chillers. Much of the report is on analysis of such systems for different navy facilities. Assumptions and results of simulations are included. Comparative economic analysis for a model facility is used to guide decisions on using cogeneration and absorption chillers in other facilities througout the country. Emission regulation is described which is applicable to engine chillers as well. [Pages:220 EA:3 MS:5 CC:3 TDV:1 FS:3]

Architectural Energy Corp. 2003. *Hawaii Commerical Building Guidelines for Energy Efficiency: Building Cooling, Heating and Power Generation Systems.*

This portion fo the Hawaii commerical building guidelines covers building cooling, heating and power generation systems. The recommendation is to apply BCHP when

signficant heating and cooling loads both exists and buildings operate for many hours per year. [Pages:13 EA:3 MS:2 CC:3 TDV:1 FS:2]

Arnold, R.; W. P. Bahnfleth. 1998. *Peak shaving using natural gas engine driven chillers.* Heating, Piping and Air Conditioning p 51 59.

The article describes the use of engine-driven chillers in peak shaving applications. It is primarily a case study on a large office building. Describes engine chillers and some application issues such as acoustics, heat recovery, engine weight, and engine maintenance. Includes economic analysis and how to optimize for peak shaving application. [Pages:8 EA:4 MS:3 CC:4 TDV:1 FS:3]

Arthur D. Little Inc. 1985. *Assessment of Large Tonnage Gas-Fired Cooling Technologies for the Commercial Sector .*

GRI-88/0162

Simulation study of the economics of using gas cooling systems including engine-driven cooling systems and absorption chillers. The sectors evaluated included large office, large hotel, large retail and restaurant. [Pages:~100 EA:4 MS:5 CC:3 TDV:1 FS:1]

Association of Energy Engineers. 1996. *Gas Cooling Technology Conference and Exposition.* Gas Cooling Technology Conference & Expo

Contains 14 papers related to natural gas cooling including case studies, impact of deregulation, customer preferences, standards, emissions, and financing. [Pages:~100 EA:3 MS:1 CC:2 TDV:1 FS:4]

Association of Energy Engineers. 1997. *Gas Cooling Technology Conference & Expo.* Gas Cooling Technology Conference & Expo

Contains several slide presentations and brief papers on topics related to gas cooling including marketing, regulations, standards, case studies, and energy services. [Pages:~30 EA:3 MS:1 CC:2 TDV:1 FS:4]

Association of Energy Engineers. 1998. *Gas Cooling Technology Conference and Exposition.* Gas Cooling Technology Conference & Expo

Contains six papers or slide presentations on the following topics: integration of natural gas cooling systems in educational facilities, chiller options at family court, GRI tools for the purchaser and marketer, retrofit of a small chilled water system with a natural gas-driven reciprocating chiller, selling gas cooling with lease financing, CNN Center thorough study yields big savings. [Pages:~150 EA:3 MS:1 CC:3 TDV:1 FS:3]

Bailey, O.; Boubekeur Ouaglal; Emily Bartholomew; Chris Marnay. 2002. *An Engineering-Economic Analysis of Combined Heat and Power Technologies in a μGrid Application.* Berkeley,CA..LBNL-50023

Report includes a background on micro-grid and CHP technologies including a brief description of absorption chiller and desiccants. A model of combined heat and power was developed based on a hypothetical small shopping mall. A customer adoption model was developed for distributed generation systems. [Pages:72 EA:3 MS:3 CC:3 TDV:1 FS:2]

Bell, Jeff. 2005. *Building integrated cooling, heat and power for cost effective carbon mitigation: 2005 status and prospects for Canada, China, India, and the USA.*

The report looks at Canada, United States, China and India, the worlds four heaviest energy users, and how BCHP can be applied to reduce carbon emissions. The report objective "indicates that BCHP expansion can not only make a major contribution to carbon emission reduction in the power sector, but can also deliver cost savings in energy generation and supply." Most of the focus is on the generator side. Market projections are included. [Pages:48 EA:3 MS:2 CC:2 TDV:1 FS:3]

Berry, J. B.; R. Schwass; J. Teigen; K. Rhodes. 2005. *Advanced absorption chiller converts turbine exhaust to air conditioning.* International Sorption Heat Pump Conference Proceedings of the International Sorption Heat Pump Conference ISHPC-095-2005

A Texas multi-use complex is outfitted with a turbine generator that has its exhaust fed directly into absorption chiller. An economic analysis was performed to see how many operating hours per year make it cost effective. [Pages:6 EA:4 MS:3 CC:3 TDV:1 FS:3]

Bode, Dave. 1991. *Gas engine cooled buildings. Wave of the future?.* Diesel Progress: Engines & Drives Diesel Prog Engines v 57 n 1 p 6.

The article briefly describes the engine-driven cooling technologies by two companies: Thermoking and Trane. The Trane equipment described is a small chiller. [Pages:5 EA:3 MS:1 CC:2 TDV:1 FS:1]

Braun, J. E. 2006. *Optimized Operation of Chiller Equipment in Hybrid Machinery Rooms and Associated Operating and Control Strategies - 1200-RP.*

The report describes a set of operating strategies that minimize the cost of operating plants that include both chillers power by electricity and natural gas. Natural gas chillers described include both absorption and engine-driven chillers. The report includes system modeling, plant control optimization, cooling tower control strategy, chiller sequencing and load control strategies, monthly demand limit strategy, control strategy implementation, and cost savings for demand limiting control. [Pages:92 EA:4 MS:5 CC:5 TDV:1 FS:3]

Broad. 2006. *Direct-Fired Chiller.*

This manufacters brochure for a direct fired chiller describes the components of the chiller, how the chiller reduces the chance of crystalization of the solution, automatic purge, and other technologies. The brochure describes the models in the product line and their capacities, flow rates, and performance. [Pages:13 EA:4 MS:1 CC:2 TDV:1 FS:1]

CADDET. 1998. *Demonstration of a Gas-Engine-Driven Chiller.* Result 304. CA 97.502/3C.F04

An engine-driven chiller was demonstrated at the Trent University in Ontario Canada. While the unit showed annual energy cost savings, due to the short cooling period it had a long payback period. [Pages:4 EA:3 MS:1 CC:2 TDV:1 FS:2]

California Energy Commission. 2005. *2004 Annual Review of PIER Program - Vol 7 Energy System Integration.*

Report summarizes projects in California related to a select PIER program. Several of the summaries are related to combined heating and power or distributed generation. The terms cooling, chiller and absorption are only mentioned a few times but many good examples on power generation some with heat recovery. [Pages:168 EA:3 MS:1 CC:2 TDV:1 FS:2]

CDH Energy. 2004. *Monitoring and Data Collection Standard for Distributed Generatino/Combined Heat and Power (DG/CHP) Systems*

While the document does not focus on chillers, its section on monitoring of CHP systems will be valuable in monitoring combined systems that do include chillers. From the introduction "the monitored data are intended to quantify facility load profiles, generator power output, fuel consumption, useful thermal outputs, parasitic loads and equipment runtimes." Some diagrams do include absorption chillers. Includes appendix on data point naming convention. [Pages:17 EA:3 MS:1 CC:2 TDV:1 FS:1]

Cowie, M.; A. Marantan; P. W. Garland; R. Radermacher. 2002. *CHP for buildings: the challenge of delivering value to the commercial sector.* Proceedings of IMECE2002, ASME International Mechanical Engineering Congress and Exposition New Orleans, LA.

The abstract states that it is a: "a broad discussion of the challenges that CHP faces when competing in the commercial sector and the technologies and strategies that will help overcome them." Sections of the paper address energy demand, the ratio of thermal to electric power, operating hours, energy consumption savings, waste heat recovery, installation complexity, and a test center. [Pages:8 EA:4 MS:1 CC:4 TDV:1 FS:2]

Crowther, Hugh. 2000. *Installing Absorption Chillers.* ASHRAE Journal July Atlanta GA.

Article describes the roles of the architect, structural engineering, mechanical designer, and commissioning agent when installing absorption chiller plants. A good list of other installation considerations are included. [Pages:2 EA:4 MS:1 CC:2 TDV:1 FS:1]

Czachorski, Marek; William Ryan; John Kelly. 2002. *Building load profiles and optimal CHP systems.* ASHRAE Transactions v 108 pt 2 p 682-690. Atlanta GA.

Five building types were evaluated using simulation: hospital, large retail, large education, large hotel, and large office building in regards to their loads and how well they would work with a combined cooling, heating and power system. A detailed economic analysis is included. Several non-dimensional parameters are used to generalize the results. [Pages:9 EA:3 MS:5 CC:3 TDV:1 FS:3]

Decker, Marvin. 1988. *Development of a Gas-Fired Absorption Chiller for the United States Market.* GRI-92/0334

A detailed engineering description of the testing of a new design for a double-effect absorption chiller. Testing included U.L tests for compliance and reliability

assessments. Tests included the burner, ARI ratings, a flue gas recirculation. [Pages:75 EA:4 MS:1 CC:3 TDV:1 FS:1]

Discovery Insights. 2005. *2005 CHP Action Agenda: Innovating, Advocating, Raising Awareness, and Delivering Solution.* 6th Annual CHP Roadmap Workshop New York, NY.

The report lays out a action agenda related to CHP technology. The report describes the top achievements from action plan. Progress since the previous roadmap was established. The report summarizes technology development and commercialization, advocating and legislation, increased awareness, and market development and implementation. [Pages:32 EA:3 MS:1 CC:3 TDV:1 FS:2]

Dorgan, Chad B.; Steven P. Leight; Charles E. Dorgan. 1995. *Application Guide for Absorption Cooling/Refrigeration Using Recovered Heat.*

The introduction states "ASHRAE commissioning this application guide in response to the need for a comprehensive refernece manual for the application of indirect-fired absorption machines." The book includes sections on system characteristics, economics, heat recovery, various absorption cycles, applications, and related technologies. Appendices include tabular data and algorithms for simulation models. [Pages:186 EA:4 MS:5 CC:2 TDV:1 FS:1]

Dorgan, C. B.; R. J. Linder. 1998. *Cooling Plant Optimization Guide.* TR-110404

The abstract states in part: "This buide identifies opportunities for optimizing a central cooling plant and provides a simplified optimization procedure. The guide focuses on plant optimization from the standpoint of minimizing energy costs and maximizing efficiencies. Two case studies demonstrate utility of the procedure." While the focus of the guide is on mutliple chiller plants some mention of gas chillers are included. [Pages:86 EA:3 MS:3 CC:5 TDV:1 FS:3]

Electric Power Research Institute. 1997. *Chiller Maintenance.* SU-108397

This electric industry article describes how maintenance costs are for various types of chillers. The maintance costs are divided into critical routine tasks, major long-term tasks and annual full service maintenance costs. It shows that engine chillers are the most expensive, followed by double-effect

absorption chillers, and then electric chillers are the least expensive. [Pages:4 EA:3 MS:1 CC:2 TDV:1 FS:3]

Electric Power Research Institute. 1998. *Chiller Plant Optimization Offers Significant Savings.* MI-111713

The case study by an electric utility showed how better staging of a hybrid chiller plant that included both electric chiller and an absorption chiller would result in additional annual energy savings. The plant originally operated by using the electric chiller as the peak chiller but the study showed savings when using the electric chiller as the base load chiller. [Pages:3 EA:3 MS:2 CC:3 TDV:1 FS:2]

Electric Power Research Institute. 1997. *Chiller Selection.* SU-103433-R3

The electric industry article describes the process to select a chiller. The article covers many types of electric and gas chillers including absorption chillers and engine-driven chillers. The article briefly covers the energy and installation costs, emissions, maintenance costs, and source energy use. [Pages:4 EA:3 MS:1 CC:2 TDV:1 FS:2]

Electric Power Research Institute. 1998. *Electric Chiller Handbook.* TR-105951-R1

The focus of the report is on electric chillers but it does include market share and engineering information about absorption and engine-driven chillers as a means of comparison. It also compares maintenance needs for electric and gas cooling equipment. Includes about 15 case studies with some related to replacing gas chillers with electric ones. [Pages:158 EA:4 MS:3 CC:4 TDV:1 FS:4]

Electric Power Research Institute. 1997. *Electric Chillers Offer Shorter Paybacks Than Gas Options.* SU-107636

This electric industry case study indicates for a large office building in Connecticut, that moving from a district heating and cooling system to a electric chiller system saved money. In addition, options with absorption chillers were considered and not chosen. [Pages:2 EA:3 MS:2 CC:2 TDV:1 FS:2]

Electric Power Research Institute. 1997. *Study Raises Concerns About Absorption Chillers.* SU-107595

The electric industry case study finds that gas-fired chillers actual operation was lower than expected and their emissions of Nox do not allow them to operate full time. In addition, maintenance costs for absorption chillers are shown as higher than conventional electric chillers. [Pages:4 EA:3 MS:1 CC:2 TDV:1 FS:3]

Electric Power Research Institute. 1998. *The Chiller's Role Within a Utility's Marketing Strategy.* TR-110373

This electric industry report is subtitled "using chiller related produces and services to winand retain customers." The portion of the report discussing non-electric chillers is focused on how to convince customers to not use them. The study included interviews of end-users, chiller and control manufacturers, and electric utilities. Grouped customers into green, professional management, real estate and "too lean." [Pages:108 EA:3 MS:2 CC:3 TDV:1 FS:3]

Eley, Charles; Steve Taylor; Paul DuPont; Bruce Jones; Tom Hartman; Mark Hydeman. 2000. *CoolTools Chilled Water Plant Design and Specification Guide.* CoolTools Report #CT-016

The abstract states: "The CoolTools™ Chilled Water Plant Design and Specification Guide is targeted to a technical design audience. It includes design issues such as selection of coils, application of different piping distribution systems, design and applications of controls, mitigation of low delta-t syndrome, and a myriad of other performance critical issues. It also includes a section on Performance Specifications, which is targeted to equipment specifiers, including engineers and facility purchasing agents. It details methods to request and analyze the performance data of submitted equipment. Topics include zero tolerance performance specifications, applications of witness tests, and performance tables for bid alternates." It includes only a few pages on

absorption and engine-driven chillers. Special notes related to absorption and engine-driven chillers appear throughout the report. [Pages:302 EA:3 MS:5 CC:3 TDV:1 FS:2]

Emho, Laszlo. 2002. *District energy efficiency improvement with absorption cooling: The Hungarian experience.*

ASHRAE Transactions v 108 pt 2 p 589-594. Atlanta GA.

The paper focuses on how the utilization of waste heat to drive absorption chillers can increase the overall energy conversion efficiency of a cogeneration system. Brief case studies of a Hungarian shopping center, an office building complex, shopping center with hotel and condominiums, convention center and construction camp with residential and community buildings. [Pages:6 EA:2 MS:1 CC:3 TDV:1 FS:1]

Energy Center of Wisconsin. 1993. *Field Monitoring of Alternative Cooling Technologies - Commercial Cooling Project Task III.* 157-1-EN00EP

From the abstract "to provide performance data on alternative cooling technologies in Wisconsin, we monitored two absorption chillers, three gas-engine chilers, two gas-engine DX units, and one electric thermal storage unit for one to three years between 1992 and 1994." The results were compared with simulations of electric cooling systems. Absorption and engine chillers were found to cost less to operate but substantial auxiliar energy was used. [Pages:55 EA:4 MS:3 CC:4 TDV:1 FS:3]

Energy Center of Wisconsin. 1997. *Hybrid Cooling Assessment.*

Four case studies in Wisconsin of cooling systems that include both gas-fired and electric components. The results show significantly lower demand and lower operating costs. The "most promising candidates for hybrid cooling systems appear to be office buildings, schools and buildings with office- like cooling load profiles. Candidates tolerant of longer payback periods, such as municipalities, school boards, and government agencies, are also promising." Results of monitoring buildings are presented. [Pages:70 EA:4 MS:2 CC:4 TDV:1 FS:3]

Energy and Environmental Analysis. 2003. *Market Potential for Advanced Thermally Activated BCHP in 5 National Account Sectors.*

The report is focused on hospitals and nursing homes, supermarkets, hotels and motels, restaurants and big-box retail markets and how they are potential markets for cooling, heating and power integrated plants. The report descibes current use of similar equipment in those markets. Both absorption and desiccant use of waste heat are described. Hospitals and hotels account for two-thirds of the future potential installations by capacity. [Pages:49 EA:4 MS:3 CC:3 TDV:1 FS:3]

Engineered Systems. 2002. *Mall managers sold on absorption cooling and on-site electricity generation.* Engineered Systems v 19 n 11 p 28-30.

This short article describes on how a retail mall in Florida has employed engine-driven generators and is using the waste heat from them to power absorption chillers used to

cool the mall. A description of the components in the plant is included. [Pages:2 EA:3 MS:1 CC:2 TDV:1 FS:1]

Engineered Systems. 2005. *Natural Gas: A Cool Solution to the High Cost of Cooling.*

The report is essentially a long brochure encouraging the use of natural gas cooling technologies and is aimed at consumers and business decision makers. Covers absorption chillers, engine-driven cooling, steam turbine-drive chillers, hybrid electric and gas chiller plants, and combined heat and power. [Pages:22 EA:3 MS:1 CC:2 TDV:1 FS:2]

Engineered Systems. 2001. *Steam helps crack Walnut Street system update.* Engineered Systems v 18 n 11 p 16-18.

The brief article describes how a 25 floor office tower installed a hybrid cooling plant including a 600 ton single stage absorption chiller and a 600 ton electric centrifugal chiller along with a backpressue turbine generator. The high pressure steam entering the building went through the tubine generator that would reduce the pressure and generate electricity for the building. The reduced pressure steam feeds the absorber and then preheats the domestic hot water for the building. [Pages:2 EA:4 MS:1 CC:4 TDV:1 FS:2]

Engineered Systems. 2002. *Time and life makes news with rare trifuel chiller plant.* Engineered Systems v 19 n 11 p 20- 22.

The brief article describes the chiller plant for the Time and Life Building consisting of an electric chiller, a steam turbine chiller and two gas engine-driven chillers. The energy cost savings exceeded $1 million in 2001 and were on track to do the same in 2002. [Pages:2 EA:2 MS:1 CC:2 TDV:1 FS:1]

Environmental Protection Agency. 2006. *Catalogue of CHP Technologies.*

The first 14 pages include an overview of combined heat and power systems and include descriptions and efficiency formulas. In addition installed cost, operating and maintenance costs, star up time, availability, thermal output, efficiency, and emissions and briefly described. The remainder of the report contains technology characterizations for gas turbines, microturbines, reciprocating engines, steam turbines, and fuel cells. Each of the technology characterizations contains many details about the generators. [Pages:150 EA:3 MS:2 CC:3 TDV:1 FS:2]

Erickson, Donald C.; G. Anard; Icksoo Kyung. 2004. *Heat-Activated Dual-Function Absorption Cycle.* ASHRAE AN- 04-7-3

The paper describes a new absorption cycle called dual-function absorption that can utilize low grade waste heat. The cycle is described and analyzed and a cost estimate is described along with what applications it would be well suited for and its benefits. [Pages:10 EA:3 MS:2 CC:3 TDV:1 FS:1]

ource. 2006. *HVAC: Natural Gas Chillers.*

The paper describes the various gas chiller options including single- and multiple-effect absorption and engine-driven chillers. One section on how to make the

best choice includes steps that should be taken on the chiller selection process. [Pages:5 EA:3 MS:1 CC:3 TDV:1 FS:2]

European Commision, Directorate-General for Energy. 2001. *Energy savings by combined heat cooling and power plants (CHCP) in the hotel sector.*

The main portion of the report is 128 pages with the balance being appendices. The analysis was based on detailed energy audits of European hotels and then looking at the economics of cogeneration plants that utilize the waste heat including for cooling. The economic analysis is the bulk of the report with appendices on the audit results for the specific hotels. Hotels were in Cyprus, Greece, Italy, Portugal and Sweden. Appendices on the technologies of combined heat and power and on absorption chillers show information unique to Europe. [Pages:390 EA:4 MS:3 CC:4 TDV:1 FS:3]

Fineblum, Solomon. 2001. *Economics of Absorption Chillers Powered by Low-Grade Heat with, and without, Vortex- Induced Pressure Reduction in the Generator.* ASHRAE 4461

The paper looks at how absorption chillers can be modified to reduce the pressue in the generator using with a vortex-induced pressure reducer. This enables the use of lower grade (lower temperature) waste heat. The paper discusses the technology which is patented as well as the economics. [Pages:6 EA:3 MS:3 CC:3 TDV:1 FS:2]

Fischer, Steve. 2004. *Assessing Value of CHP Systems.* ASHRAE Journal June Atlanta GA.

The paper focuses on a simplified economic assessment of using waste heat from on-site cogeneration. Matching the loads for space heating, cooling, and hot water with the amount available from the generator. How to estimate the payback of such a system and the impact of demand charges. [Pages:7 EA:3 MS:3 CC:2 TDV:1 FS:3]

Fischer, Steve K.; P. J. Hughes; S. Carlson; H. Henderson. 2001. *CHP Demonstration Projects at Federal Facilities.*

Paper is focused on use of combined heating and power plants in the federal sector with one specific site at Fort Bragg being described in detail. Absorption chillers were not used at that site so cooling is not described other than a future possibility. [Pages:7 EA:2 MS:1 CC:2 TDV:1 FS:1]

Gabel, Steve. 2006. *Modular Integrated Energy Systems - Task 5: Control and Optimization Performance Report.*

The report describes an installation of cooling, heating and power at Ft. Bragg, NC. The introduction states that the document includes: "the results of the development and implementation of a control optimization capability for application to integrated energy systems." The system included an exhaust- driven absorption chiller. The focus of the document is on the control system. [Pages:47 EA:4 MS:4 CC:5 TDV:1 FS:2]

Gas Technology Institute. 1989. *Gas Cooling Markets in the Commercial Sector.*

The short paper shows different climate regions and buildings with various daily space cooling load profiles and how they generally impact the economics of gas cooling. The paper is a summary of a larger analysis titled Assessment of Large Tonnage Gas-Fired Cooling Technologies for the Commerical Sector. The discussion

in the paper on equipment and operation is at a very abstract level. [Pages:5 EA:2 MS:4 CC:2 TDV:1 FS:3]

Gas Technology Institute. 1999. *Gas Engine Chiller Ready Reference Guide .* GRI-99/0147

Describes the design, operation, performance, and economics of gas engine chillers. Looks at the customer profile and target market for engine chillers. Explores requirements such as permitting, noise, maintenance and service for engine chillers. [Pages:27 EA:4 MS:1 CC:3 TDV:1 FS:2]

Gas Technology Institute. 2005. *Natural gas fired cooling technologies and economics.*

According to the preface "the overall objective of this textook is to provide a comprehensive source of information on technologies and economics for using natural gas cooling." The chapters include an introduction to absorption cooling, performance characteristics and system design, operation of absorption equipment, absorption applications and target markets, absorption equipment, an introduction to gas-engine-driven chillers, their design, installation, service and maintenance, applications, availability, and economics. In addition the book covers desiccants. [Pages:286 EA:5 MS:4 CC:5 TDV:1 FS:3]

Gibson, Gerald L. 1997. *Supervisory controller for optimization of building central cooling systems.* ASHRAE Transactions v 103 n 1 p 486-493. Atlanta GA.

This paper describes how artificial neural networks and genetic algorithms can be applied to optimize a central cooling plant that contains an electric screw chiller and a gas-fired engine chiller. This appoach was applied to a equipment operating in a high school. [Pages:8 EA:2 MS:3 CC:4 TDV:1 FS:2]

Glazer, Jason; Roger Hedrick; Robert H. Henninger; Michael J. Witte. 1999. *GasMod 1998 Interim Report.*

The abstract includes: "GasMod is the module of PG&E's CoolTools™ project that covers the integration of absorption and engine-driven chiller manufacturers and filed test data with hourly simulation tools. The report includes a detailed plan, manufacturers data, field test information, algorithms for hourly simulation of engine-driven and absorption chillers. In addition, the future development needs of the GasMod project are discussed." Overall the report is very focused on building energy simulation and comparing the results to monitored building data. [Pages:226 EA:3 MS:5 CC:3 TDV:1 FS:1]

Grossman, Gershon; Joseph E. Rasson. 2003. *Absorption Systems for Combined Heat and Power: The Problem of Part- Load Operation.* ASHRAE CH-03-5-1

The paper examines issues related to part load operation in building plants that combine power, heating and cooling. Provides information on turbine exhaust temperatures, mass flow rate, and heat recovered at part load. Describes a technology of using an auxiliary desorber to recover heat at lower temperatures. [Pages:8 EA:4 MS:2 CC:3 TDV:1 FS:1]

Haefke, Clifford P; John J. Cuttica. 2005. *CHP Market Entry Status in the Midwest: A State-by-State Analysis.*

The report is primarily focused on combined heating and cooling system. According to the executive summary "This study identified 13 factors that influence the feasibility of CHP installations within the eight Midwest states of Illinois, Indiana, Iowa, Michigan, Minnesota, Missouri, Ohio, and Wisconsin."

The 13 factors were focused on the generating aspect of CHP systems. [Pages:61 EA:2 MS:1 CC:2 TDV:1 FS:3]

Hedman, Bruce. 2004. *CHP Subcontractors Coordination Review Meeting, CHP/DG Applications and Analytical Support.*

The presentation describes a project with five tasks: CHP facility database, installation cost analysis for small CHP, DG/CHP financing options, electric rate primer, and lessons learned from small packaged CHP projects. [Pages:22 EA:2 MS:2 CC:2 TDV:1 FS:1]

Henkel, E. Thomas. 2005. *New solar thermal energy applications for commercial, industrial, and government facilities.*

Energy Engineering: Journal of the Association of Energy Engineering v 102 n 2 p 39-58.

Primarily describes the use of solar energy collection and its applications in general. Portions describe use of heat from solar energy driven absorption chiller. [Pages:20 EA:3 MS:2 CC:3 TDV:1 FS:1]

Herold, Keith E.; Reinhard Radermacher; Sanford A. Klein. 1996. *Aborption Chillers And Heat Pumps.* 0849394279

This textbook includes homework problems with each chapter. It covers absorption chillers and heat pumps in detail starting with absorption cycle fundamentals and the properties of working fluids. It is focused on the thermodynamics of the various cycles, some commonly used in commercial equipment, and some not. Many equations and graphs allow students studying absorption systems in an acedemic setting to get a good background. [Pages:329 EA:4 MS:4 CC:3 TDV:1 FS:1]

Higa, Randall. 2001. *SoCal Gas Pico Rivera BCHP.* AGCC Chiller Committee meeting, Tampa Florida

The slide presentation provides background on the Pico Rivera facility including the current chilled water system and the replacement BCHP system. Plans of the site piping are shown as well as schematics of the mechanical, electrical and instrumentation systems. [Pages:19 EA:4 MS:1 CC:3 TDV:1 FS:2]

Hudson, Randy. 2003. *Survey of DER/CHP Software.*

This slide presentation describes a variety of software programs available to evaluate or help design DER/CHP applications for building, campuses and industry. It presentation does not include typical simulation programs such as Trace, HAP or EnergyPlus. Nine software programs are described. The main inputs and outputs are shown for each program. [Pages:42 EA:3 MS:5 CC:3 TDV:1 FS:3]

Hudson, C. Randy. 2005. *ORNL CHP Capacity Optimizer User's Manual.* ORNL/TM-2005/267

The abstract states that this: "document provides a guide to the use of the automated spreadsheet tool that can be used by end-users and system developers to determine the

most appropriate capacities for prime mover and chiller that will maximize the life-cycle, net present value savings produced by CHP systems." An appendix also provides a detailed description of the algorithm used. [Pages:56 EA:4 MS:5 CC:5 TDV:1 FS:2]

Hughes, Patrick. 2001. *FEMP:Making CHP Accessible to Federal Agencies.* CADER Presentation International Symposium on Distributed Energy Resources.

The slide presentation examines how to make combined heat and power systems more accessable to federal agencies. Describes how many CHP systems are serving federal sites and how more are being discovered regularly. A market prediction across major states and building types is included. Describes the value of packaging CHP so that they are more easily specified. [Pages:28 EA:4 MS:1 CC:3 TDV:1 FS:2]

Itteilag, Richard L. 1994. *A Guide To Natural Gas Cooling .*

The book is focused on natural gas cooling. The bulk of the book is spent addressing the main technologies such as absorption, engine-driven cooling, desiccants and rooftop systems. The balance of the book is on demand side management, how gas cooling compares to thermal storage, and the impact on the environment. [Pages:158 EA:5 MS:2 CC:3 TDV:1 FS:3]

Jalalzadeh, Ali A.; Steven J. Slayzak; Joseph R. Ryan. 2002. *Evaluation of Cooling, Heating, and Power (CHP) for Office Buildings.* ASHRAE AC-02-18-3

Two different cooling, heating and power configurations are considered in the evaluation discussed in the paper. One to maximize conservation of fossil fuels and reduce emissions and ther other to provide the electrical load of the building to provide independence from the electric utility. These configurations were analyzed in Atlanta, Salt Lake City, and Boston. [Pages:7 EA:3 MS:4 CC:4 TDV:1 FS:3]

Jalalzadeh-Azar, Ali A. 2003. *A Parametric Analysis of a Grid-Independent BCHP System - Focusing on Impact of Technological Advancements.* ASHARE 4637

The paper describes the results of a parameteric analysis of looking at 12 scenarios involving microturbines and absorption chillers in a grid-independent system for an office building. [Pages:10 EA:3 MS:3 CC:3 TDV:1 FS:1]

Jalalzadeh-Azar, Ali A. 2004. *A Comparison of Electrical- and Thermal-Load Following CHP Systems.* ASHRAE 4701

The abstract states "the objectives of this study are to evaluate the thermodynamic performance of a thermal-load-following CHP system for the same building and to compare results with those of the previous study." The previous study was on an electric-load-following CHP system. A parametric analysis is included. [Pages:10 EA:3 MS:3 CC:3 TDV:1 FS:2]

Katipamula, S.; M. R. Brambley. 2006. *Advanced CHP Control Algorithms: Scope Specification.* PNNL-15796

The report lists the algorithms to be developed for control of combined cooling, heating and power systems durign a multiyear project. The report includes summaries

"of interviews conducted with CHP owners and users on their needs and issues with CHP systems." Also included are potential CHP configurations, instrumentation and control requirements. [Pages:45 EA:4 MS:3 CC:5 TDV:1 FS:1]

Kistler, Paul. 1997. *Advantages and Disadvantages of Using Absorption Chillers to Lower Utility Bills.*

The brief paper describes the history of absorption chillers and their improvements. Also describes the technology of absorption chiller and the components. [Pages:5 EA:3 MS:1 CC:3 TDV:1 FS:1]

Kline, Keith; Stan Hadley; Julia Kelly. 2002. *ADD CHP: Accelerated Development and Deployment of Combined Cooling, Heat, and Power at Federal Facilities.* ACEEE Summer Study

The paper describes the accelerated development and deployment of combined cooling, heat and power systems being performed by the U.S. Department of Energy's Federal Energy Management Program. The program protes "teamwork among private- and public sector partners - project developers, energy servcie companies (ESCOs), financiers, industry manufacturers, federal facility managers, and DOE staff." Current and projected federal use of CHP is described along with barriers and strategies to overcome them. [Pages:12 EA:3 MS:1 CC:3 TDV:1 FS:2]

Koeppel, E. A.; S. A. Klein; J. W. Mitchell; B. A. Flake. 1995. *Optimal supervisor control of an absorption chiller system.* HVAC&R Research Journal v 1 n4 p 325-340.

The paper describes research of using a simulation program TRNSYS along with an optimization algorithm to evaluate different supervisory control options for a direct-fired double-effect absorption chiller. The control options evaluated included the baseline, variable chilled and cooling water pump speed and tower fan speed, variable water pump speed and tower fan speed, variable tower fan speed, and two-speed tower fan. [Pages:17 EA:4 MS:5 CC:5 TDV:1 FS:1]

Kren, Christoph; Cristian Keil; Stefan Plura; Michael Radspieler; Matthias Schicktanz; Christian Schweigler. 2007.

Applications of Customized Absorption Heat Pumps with Heating Capacities above 500 kW. ASHRAE DA-07-008

This paper describes the utilization of waste heat from a German municipal composting plant. A direct fired single stage absorption chiller increases the temperature of the waste heat and utilizes it for producing chilled water. In another application, a spa using a combined heating and power plant drives a two-stage absorption heat pump. Finally, the last case study is a housing development that uses solar assisted heat for absorption cooling. [Pages:15 EA:4 MS:2 CC:4 TDV:1 FS:1]

Lee, Shun-Fu; S. A. Sherif. 2001. *Thermoeconomic Analysis of Absorption Systems for Cooling.* ASHRAE AT-01-9-1

The paper describes the application of thermoeconomics, a discipline that combines both thermodynamic and economic analysis, to absorption chillers. The evaluation of the life-cycle costs are compared between a electric chiller, a single-effect absorption chiller, double-effect absorption chiller, and triple-effect absorption chiller. [Pages:9 EA:3 MS:3 CC:2 TDV:1 FS:3]

LeMar, Paul. 2002. *Integrated Energy Systems (IES): A Market Assesment.* ORNL/SUB/409200

Report describes integrated energy systems, combined heat and power systems, absorption chillers, engine-driven chillers and desiccant systems. Sections are describe the market potential for integrated energy systems as well as technical and market barriers. [Pages:77 EA:3 MS:1 CC:3 TDV:1 FS:3]

Lindmark, Susanne. 2005. *The Role of Absorption Cooling for Reaching Sustainable Energy Systems.*

This thesis looks at home absorption cooling is part of a strategy for greater sustainability by utilizing otherwise wasted waste heat. The focus is on understanding the reduction in CO2 emissions by using absorption technology with waste heat from a waste incinerator or distributed energy system. [Pages:55 EA:4 MS:1 CC:4 TDV:1 FS:3]

Mahone, Douglas. 1998. *Absorption Chillers - Advanced Design Guidelines.* Fair Oaks, CA.

Part of the advanced design guide series, this report focuses on providing graphs to determine if absorption chillers are cost effective for a specific application. Also included are chapters describing the absorption chillers and their history. The graphs include economics for medium office buildings, large office buildings, retail stores, strip retail, hospital, junior high school, hotel, full service restaurant, and fast food restaurant. [Pages:97 EA:3 MS:2 CC:2 TDV:1 FS:3]

Mahone, Douglas. 1998. *Gas Engine-Driven Chillers.*

Part of the advanced design guide series, this report focuses on providing graphs to determine if engine-driven chillers are cost effective for a specific application. Also included are chapters describing the engine-driven chillers and their history. [Pages:102 EA:4 MS:3 CC:3 TDV:1 FS:3]

Maor, Itzhak; Agami Reddy. 2008. *Near-Optimal Scheduling Control of Combined Heat and Power Systems for Buildings.* 1340-RP

The abstract starts with "this research addresses the importance of proper scheduling control of equipment in Combined Heat and Power (CHP) systems for commerical/institutional buildings." The report investigates near-optimal controls of components in a BCHP system where near optimal is due to the control of equipment already selected to be operational in a given day. Many simulations were performance to analyze various control scenarios. An overview of the BCHP market is included featuring statistics on buildings. Rules-of-thumb for design choices are described. Seven representative cities were chosen with two in California. A literative review is also included. [Pages:111 EA:5 MS:5 CC:5 TDV:1 FS:3]

Maor, Itzhak; Agami Reddy. 2009. *Cost Penalties of Near-Optimal Scheduling Control of BCHP Systems: Part I: Selection of Case Study Scenarios and Data Generation (RP 1340).* 1340-RP

The paper describes an analysis that "assessed the impact in energy reduction and cost savings of optimal versus near-optimal operation of building combined heat and power (BCHP) plants." The analysis used simulation models of BCHP systems to

compare their operation and the costs associated with the operation. [Pages:33 EA:4 MS:4 CC:5 TDV:1 FS:2]

Marantan, Aristotle; Predag Popovic; Reinhard Radermacher. 2002. *The Potential of CHP Technology in Commercial Buildings - Characterizing the CHP Demonstration Building.* ASHRAE AC-02-18-1

The paper describes combined cooling, heating and power plants in general and describes a building on a university campus in Maryland as an example application. Power consumption versus time of day and in relation to outside air temperature help characterize the building. [Pages:7 EA:3 MS:2 CC:3 TDV:1 FS:1]

Meckler, Milton; Ross Meriwether; Robert Henninger; Kevin McGahey. 1995. *Technology Transfer Workshop: Engine Systems.*

The workbook for a course covering engine chillers. The main sections include an overview of the gas- engine chiller technology, a description of a case study of a hospital, the process of selecting and designing a plant using engine chillers, and economic analysis including utility rates. The slides from the course are approximately half the pages. Disks are included of the example problems. The analysis is shown using several building energy simulation programs. [Pages:~200 EA:5 MS:5 CC:3 TDV:1 FS:1]

Meckler, Milton. 1998. *Rethinking Chiller Plant Design.* Heating, Piping and Air Conditioning

An brief article about how deregulation may affect the choice of chillers in a plant. Choices including gas engine-driven chillers and absorption chillers alone or in conjunction with electric chillers should be part of the design process. [Pages:3 EA:2 MS:1 CC:2 TDV:1 FS:3]

Meckler, Milton. 2002. *BCHP design for dual phase medical complex.* Applied Thermal Engineering v 22 n 5 p 535-543.

The paper describes the use of combined cooling, heating and power for a medical complex including office buildigns and hospital. [Pages:6 EA:3 MS:1 CC:3 TDV:1 FS:1]

Meckler, Milton; Lucas B. Hyman. 2005. *Thermal tracking CHP and gas cooling.* Engineered Systems

The article describes how thermal tracking in a cooling heating and power plant for a building should be considered when using a turbine generator. The use of heat recovery via high temperature resistant heat transfer fluids can provide high temeprature heat and reduce the cost of the heat recovery. [Pages:5 EA:3 MS:1 CC:3 TDV:1 FS:1]

Meckler, Milton; Lucas B. Hyman; Kyle Landis. 2007. *Designing sustainable on-site CHP systems.* ASHRAE Transactions v 113 pt 1 p 80-88. Atlanta GA.

According to the abstract " this paper demonstrates the use of prefabricated, skid-mounted hybrid steam generates with internal headers, fully integrated with low pressure drop heat-extraction coils located in the gas turbine exhaust and employing environmentally benign heat transfer fluids." The novel CHP plant configuration includes absorption chillers to utilize the waste heat and is compared to conventional CHP plants. [Pages:9 EA:4 MS:1 CC:4 TDV:1 FS:1]

Midwest CHP Application Center. 2005. *Baseline Analysis for the CHP Market in Indiana.*

According to the executive summary: 'The purpose of this baseline analysis is to assess the prevailing environment for Combined Heat and Power (CHP) systems from regulatory, private market and technology perspectives in the state. This information will be used to develop educational and market transformation programs, which will foster CHP applications." In addition: "Large industrial facilities, schools and universities seem to be particularly attractive for CHP systems in Indiana, followed by hospitals, hotels and district heating systems." [Pages:57 EA:2 MS:1 CC:2 TDV:1 FS:3]

Midwest CHP Application Center. 2002. *BCHP Baseline Analysis for the Illinois Market 2002 Update.*

This report updates a report on Illinois market for building cooling, heating and power systems including additional installations and efforts made to make permitting easier in Illinois. The report identifies the barriers including interconnection, capital costs and payback time frames, operating costs uncertainty due to gas prices, and standby electric charges. [Pages:75 EA:3 MS:1 CC:3 TDV:1 FS:3]

Midwest CHP Application Center. 2003. *BCHP Baseline Analysis for the Missouri Market.*

This report on the Missouri market for building cooling, heating and power systems including additional installations and efforts made to make permitting easier in Missouri. According the the executive summary "schools and Universities seem to be particularly attractive candidates for BCHP in Missouri, followed by district heating systems." The report describes the barriers for deployment of BCHP in the state and compares it with other states. [Pages:46 EA:3 MS:1 CC:2 TDV:1 FS:3]

Midwest CHP Application Center. 2005. *CHP Baseline Analysis for the Iowa Market.*

The market for combined heat and power in Iowa is described in this report along with a list of current applications in the state. The reports indicates that 372,800 kW of CHP systems exist in Iowa. Organizations that could help in the deployment of CHP in Iowa include: Governor's Energy Coordinating Council, Iowa Department of Natural Resources Energy Center, Iowa Utilities Board, Iowa Energy Center, Midwest CHP Initiative [Pages:48 EA:2 MS:1 CC:2 TDV:1 FS:3]

Midwest CHP Application Center. 2004. *BCHP Baseline Analysis for the Ohio Market.*

According to the executive summary: "Focusing on BCHP systems in commercial installations, the Midwest CHP Application Center (MAC) identified a total of 6 BCHP installations producing close to 11,000 kW in Ohio, three of these installations are located at schools (Colleges)." Fifity key firms were identified as having project experience related to the installation of BCHP systems in Ohio. Comparisons with other states were also made. [Pages:47 EA:3 MS:1 CC:3 TDV:1 FS:3]

Midwest CHP Application Center. 2003. *BCHP Baseline Analysis for the Minnesota Market.*

Examines the market for BCHP systems in Minnesota including what firms have experience or capabilities, a survey of current Minnesota installations, pricing issues,

policy issues, and market potential. The executive summary states: "District Energy systems seem to be a particularly attractive application for BCHP systems in Minnesota with over 115,000 kW installed, followed by installations at universities (47,000 kW), and then hospitals (34,000 kW)." [Pages:46 EA:3 MS:1 CC:3 TDV:1 FS:3]

Midwest CHP Application Center & Avalon Consulting. 2003. *Combined Heat and Power (CHP) Resource Guide.*

The preface states in part: "to provide a ready reference for the basic principles of Combined Heat and Power (CHP) and Rules-of-Thumb that apply when considering the application of CHP." The guide includes information in an outline format with many tables and diagrams. A newer version of this guide is also shown in the bibliography. [Pages:51 EA:4 MS:2 CC:4 TDV:1 FS:3]

Midwest CHP Application Center & Avalon Consulting. 2005. *Combined Heat & Power (CHP) Resource Guide.*

This is the updaetd version of the previous guide. The preface states in part: "to provide a ready reference for the basic principles of Combined Heat and Power (CHP) and Rules-of-Thumb that apply when considering the application of CHP." The guide includes information in an outline format with many tables and diagrams. [Pages:66 EA:4 MS:2 CC:4 TDV:1 FS:3]

Midwest CHP Application Center & Avalon Consulting. 2007. *Combined Heat & Power (CHP) Resource Guide for Hospital Applications.*

A reference book for hospitals considering installating combined heating and power systems for their facilities. Sections include energy concerns of U.S. hospitals, CHP basics, energy sysetms at hospitals, CHP and hospitals - a good match, CHP equipment, feasibility evaluation, hospital energy loads, and hospital CHP installations. [Pages:81 EA:2 MS:1 CC:2 TDV:1 FS:2]

Midwest CHP Application Center. 2002. *Elgin Community College Site Report for CHP Applications.* 27. MAC #2002- 004

Describes the installation of a combined heat and power plant in a Chicago area community college. As part of the upgrade of the chiller plant a new absorption chiller replaced the old absorption chiller. The report describes the energy analysis, financial analysis, financial considerations, operability analysis, installation analysis, environmental considerations, and lessons learned. [Pages:27 EA:3 MS:1 CC:3 TDV:1 FS:2]

Midwest CHP Application Center. 2003. *Illinois CHP/BCHP Environmental Permitting Guidebook - Roadmapping the Permitting Process and Permitting Issues.*

The guidebook was prepared to help guide new CHP installations through the Clean Air Act permitting process in Illinois. Nearly half of the surveyed installations needed permits and used an outside consultant to help obtain the permit. Attainment and non-attainment areas require different processes. Process diagrams and steps to complete forms are included. Second volume focuses on the survey performed and results from it. [Pages:89 EA:2 MS:1 CC:2 TDV:1 FS:2]

Midwest CHP Application Center. 2001. *University of Illinois at Chicago East Campus.* MAC#2001-001

Describes a combined cooling, heating and power plant that will be serving the east campus of a large university. It will be linked to a similar plant already operating for the nearby west campus. The paper describes the details of the components in the new plant and in addition includes an energy analysis and a financial analysis of a baseline plant versus the BCHP system. [Pages:16 EA:4 MS:3 CC:3 TDV:1 FS:3]

Mississippi State University. 2004. *Cooling, Heating and Power for Buildings (CHP-B) Instructional Module.*

The introduction states that "this instruction module has been developed to introduce undergraduate engineering students to Cooing, Heating and Power for Buildings (CHP-B). Chapters on the CHP-B system, internal combustion engines, combustion turbines, fuel cells, heat exchangers, absorption chillers, desiccant dehumidifiers, and a case study on a medical center. The report includes slides appropriate for a lecture and also many equations since it is aimed at engineering students. [Pages:168 EA:4 MS:3 CC:4 TDV:1 FS:1]

National Association of Regulatory Utility Commissioners. 2005. *Natural Gas Cooling* .

The report describes the impact of gas cooling both on end-uses, utilities, and emissions. Technology issues are raised for vapor compression, absorption and desiccant cooling. The outlook of interest groups favoring and adversely affected by gas cooling is described. [Pages:51 EA:3 MS:1 CC:2 TDV:1 FS:5]

Nayak, Sandeep M. 2003. *Simulation of Trigen CHP at UMCHP.*

The slide presentation relates to a simulation of a cooling heating and power plant at the University of Maryland at College Park. The plant described includes two gas turbines, one back pressure steam turbine with a total capacity of 27 MW also included are two heat recovery steam generators and two steam turbine driven chillers providing up to 7600 tons of cooling. Simulation was performed during design and presented. Photos of the installation are also included. [Pages:29 EA:3 MS:3 CC:3 TDV:1 FS:1]

Nowakowski, Gary. 1998. *Engine-Driven Chillers: Product Design, Performance, Installation, Maintenance, Service and Operating Economics an ASHRAE Short Course.*

This slide presentation was prepared largely by GARD Analytics for use as an ASHRAE short course. It covers the basic configuration and components in an engine-driven chiller, product availability, features and benefits, product design, performance, installation requirements, maintenance and service, operating economics, market description, and product applications. The presentation includes many good photos of chillers and engines. Some unique information about mechanical room layout. [Pages:107 EA:5 MS:3 CC:4 TDV:1 FS:3]

Nowakowski, Gary A.; Mark Gramlich. 1999. *New Developments in Hybrid Natural Gas/Electric Cooling.* ASHRAE Journal September Atlanta GA.

Describes the use of hybrid plants consisting of electric chillers and engine-driven chillers. The section of the article on electiric costs shows the 40 percent or more of the

typical all electric air conditioning electric bill is the demand charge. Due to high electric costs being avoided the hybrid chiller plants are often cost effective. Five specific buildings are described. The specific design of a hybrid plant is described. [Pages:7 EA:4 MS:3 CC:4 TDV:1 FS:3]

Nowakowski, Gary A.; Rebecca L. Busby. 2002. *Advances in Natural Gas Cooling.* ASHRAE Journal April Atlanta GA.

The article "reviews the history of natural gas coolings, describes recent advances in natural gas cooling technology, and characterizes the commercial cooling market and applications." Touches on economics of absorption and engine-driven cooling technologies. Looks at trends in the chiller market. [Pages:6 EA:3 MS:1 CC:2 TDV:1 FS:3]

Oakridge National Laboratory Office of Power Technologies. 2005. *Cooling, Heating and Power (CHP): Conserving resources and reducing emissions.*

A series of five one page factsheets or brochures describing: how to conserve resources and reduce emissions by using cooling, heating and power; a triple-effect absorption chiller being field tested; desiccant dehumidification; ammonia-water absorption chillers prototypes that show dramatic gains in heating efficiency; and a next-generation absorption cycle called hi-cool being developed. [Pages:6 EA:3 MS:1 CC:3 TDV:1 FS:1]

O'Farrell, Peter M. 1986. *Applications Assessment for Gas Engine-Driven Chillers.* Chicago, Illinois.GRI-86/0246.

Describes the use of engine-driven chillers as an alternative to electric chillers. Includes description of chillers products, applications and operation, market perspective, load shifting, and market potential. [Pages:133 EA:3 MS:1 CC:3 TDV:1 FS:3]

Oland, C. B. 2004. *Guide to Combined Heat and Power Systems for Boiler Owners and Operators.* ORNL/TM- 2004/144

The primary focus of the report is combined heat and power systems and generators. Only a few pages are devoted to absorption chillers. Much of the text is applicable for adding generator systems to a building that already has boilers. Includes a decision process diagram for evaluating CHP systems. Good discussion of heat recovery equipment. Many sysem configuration diagrams are included. [Pages:207 EA:4 MS:1 CC:4 TDV:1 FS:1]

Oliver, Jason Ryan. 2005. *A micro-Cooling, Heating and Power (m-CHP) Instructional Module.*

The report is a masters thesis related to residential and small commercial sized cooling heating and power systems. It includes a chapter on absorption chillers. Other chapters are on generators, heat recovery, desiccants, and biofuels. In addition one chapter is on the European experience with small cooling, heating and power systems. Includes problems because it is expected to be used as a instructional aid to teaching a course on the topic. [Pages:227 EA:4 MS:2 CC:3 TDV:1 FS:1]

Onsite Sycom Energy. 2000. *Guidebook for Combined Heat and Power.* P700-00-011

Eleven pages set up as frequently asked questions and answers with the remainder of the paper describing four CHP sites in California. Describes the history of cogeneration. Does not describe specific technologies but addresses overall issues and policy questions. Little discussion of cooling. [Pages:17 EA:3 MS:1 CC:3 TDV:1 FS:3]

Orlando, Joseph A. 1996. *Cogeneration Design Guide.*

The focus of this report is on cogeneration and describes in detail the generators, interconnections, costs, design, and two case studies. Only a small portion of the report, about 6 pages, talks about absorption cooling. [Pages:346 EA:3 MS:2 CC:3 TDV:1 FS:1]

Parsons, J. A.; Bin Li. 2005. *A CHP System Optimization with Microturbine Recuperation Control.* ASHRAE OR-05- 9-1

The abstract states that the paper documents an analytical study of microturbine-based CHP system for a small commercial building. The flow existing the microturbine turbine (exhaust) either enters the hot side of the microturbine recuperator or is allowed to bypass this recuperators for variable recuperation. While bypassing reduces the microturbine thermal efficiency theri si better matching of the CHP thermal and electrical outputs to the building thermall and electrical loads, respectively. Absorption chilling, hot water space heating, and domestic hot water heating are employed. The overall CHP system yearly performance is investigated for various CHP and microturbine operating modes." Little of the paper describes absorption chillers. [Pages:11 EA:3 MS:1 CC:4 TDV:1 FS:1]

Pathakji, Neil; J . Dyer; J. B. Berry; S. Gabel. 2005. *Exhaust-driven absorption chiller-heater and reference designs advance the use of IES technologies.* International Sorption Heat Pump Conference Proceedings of the International Sorption Heat Pump Conference ISHPC-096-2005

This paper describes "an absorption chiller employing an advanced exhaust-driven design is the key elemetn in a new integrated energy system (IES) recently installed at a major military installation." The

development and use of reference designs will aid the design process in the future. Specific layouts of equipment are included in the paper. [Pages:8 EA:4 MS:1 CC:4 TDV:1 FS:1]

Patnaik, Vikas. 2004. *Experimental verification of an absorption chiller for BCHP applications.* ASHRAE Transactions p 489-493. Atlanta GA.

The short article looks at a system with a 615 kW reciprocating engine and a 90 ton single-effect absorption chiller. Lab performance matched expectations. Performance curves are presented. Using higher temperature waste heat provided additional chiller capacity with the same chiller. [Pages:5 EA:4 MS:4 CC:3 TDV:1 FS:1]

Pedersen, Timothy W.; Michael K. Brewer; Daryl Matsui; Richard E. Rundas; Thomas E. Durbin; Christopher L. Dilks; Michael A. Caponegro; Ralph E. Moshage. 1996. *Gas-Fueled Cooling Technologies at DOD Fixed Facilities.* Technical Report 96/62

The abstract states: "At DOD fixed facilities, energy costs can be reduced by conserving electrical energy or by replacing electrical consuming devices with alternative fuel-driven mechanisms, such as those that use natural gas, which currently accounts for only 38 percent of the fuel consumed and 20 percent of the total energy expenditures. Absorption chillers, engine-driven chillers, and desiccant based air-conditioning units are possible alternatives to electrical cooling equipment. Using these state- of-the-art gas cooling technologies to replace existing electric driven cooling devices may reduce the installation's electric demand, provide domestic hot water, and lessen environmenal impacts normally attributed to electric-driven chillers. This study evaluated the effectiveness of gas cooling technologies at selected DOD installations." [Pages:54 EA:3 MS:4 CC:3 TDV:1 FS:3]

Petchers, Neil. 2003. *Combined Heating, Cooling & Power Handbook.* 0881734330 0824742338

Example pages of this book were examined and especially the table of contents. The large handbook includes a section on refrigeration and air conditioning but much of the book is devoted to generation. [Pages:~900 EA:4 MS:2 CC:5 TDV:1 FS:2]

Petrill, Ellen; Dan Rastler. 2005. *Assessment of California CHP Market and Policy Options for Increased Penetrations.*

CEC-500-2005-060-D

The abstract states: "Since CHP could have a potentially large role in supporting California's loading order, this research proejct was undertaken. This report provides information to help California stakeholders understand the technical and economic potential for CHP in Califorina, end-user drivers and adoption barriers to CHP, cost and benefits of incentives and policy options necessary to realize the CHP opportunity, and technology gaps and R&D needs to move the CHP market opportunity forward." While most of the report is on CHP without cooling, some portions do discuss including cooling. [Pages:185 EA:4 MS:3 CC:3 TDV:1 FS:4]

Petrov, Andrie; Abdolreza Zaltash; Solomon D. Labinov; D. Tom Rizy; Randall L. Linkous. 2005. *Dyanmic Performance of a 30-kW Microturbine-Based CHP System.* ASHRAE OR-05-9-3

The paper describes two configurations of CHP systems that utilize desiccants and absorption chillers. The configurations were instrumented and tested in the CHP integration laboratory. [Pages:8 EA:3 MS:2 CC:3 TDV:1 FS:1]

Popovic, Predag; Aristotle Marantan; Reinhard Radermacher; Patricia Garland. 2002. *Integration of Microturbine with Single-Effect Exhaust-Driven Absorption Chiller and a Solid Wheel Desiccant System.* ASHRAE HI-02-5-3

The paper describes an integrated cooling, heating and power system that has a 53 percent heat utilization efficiency by utilizing both absorption and desiccant systems with waste heat from microturbines. [Pages:9 EA:4 MS:1 CC:4 TDV:1 FS:3]

Radermacher, R.; S. A. Klein; D. A. Didion. 1984. *Investigation of the Part-Load Performance of an Absorption Chiller.*

ASHRAE 2749

This paper discribes testing of a single-effect ammonia-water absorption chiller before and after some modifications to make it more efficient. The modifications included some added valves to reduce the consumption of parasitic electric energy during the "spin down" period and insulation within the chiller body. [Pages:10 EA:4 MS:1 CC:3 TDV:1 FS:1]

Rector, J. Douglas. 1997. *Maintaining Gas Cooling Equipment.* ASHRAE Journal May Atlanta GA.

Describes the maintenace requirements of absorption chillers. Describes the cylces for single- and double-effect absorption and the critical nature of purging and problems of crystalization. Monitoring the solution chemistry of the chiller is described including the use of corrosion inhibitors. [Pages:8 EA:4 MS:1 CC:3 TDV:1 FS:1]

Reddy, Agami; Itzhak Maor. 2009. *Cost Penalties of Near-Optimal Scheduling Control of BCHP Systems: Part II: Modeling, Optimization and Analysis Results (RP 1340).*

The abstract states: "This paper addresses the importance of proper scheduling control of equipment in Combined Heat and Power (CHP) systems for commercial/institutional buildings. These plants require more careful and sophisticated equipment scheduling and control methods as compared to those in industrial CHP, due to the large variability in thermal and electric loads as well as the equipment scheduling issue." A cost penalty ratio was defined to describe how far from optimal was the plant operation. Simulations were performed as part of the analysis. [Pages:31 EA:3 MS:4 CC:5 TDV:1 FS:2]

Reid, Ed; Bill Saulino. 1998. *Technology Transfer Workshop: Absorption Systems.*

The workbook for a course covering absorption chillers. The main sections include an overview of the absorption chiller technology, a description of a case study of a office building, the process of selecting and designing a plant using absorption chillers, and economic analysis including utility rates. The slides from the course are approximately half the pages. Disks are included of the example problems. The analysis is shown using several building energy simulation programs. [Pages:~200 EA:5 MS:5 CC:3 TDV:1 FS:1]

Rose, Robert J.; Don Anderson. 1998. *QuickChill Software for Efficient Chiller Upgrade Assessment.* ACEEE Summer Study

Describes the use of QuikChill software to assess efficient chiller upgrades. The QuikChill software was developed by EPA. No mention of either absorption or engine-driven chillers are in the paper. [Pages:9 EA:3 MS:3 CC:3 TDV:1 FS:1]

Ryan, William. 2001. *Deregulation and chiller plant load.* ASHRAE Journal June p 18-22. Atlanta GA.

Describes how deregulation in the electric industry may impact the cost of supplying cooling using electric chillers. Altenatives to conventional cooling plants are described including absorption and engine chillers and thermal storage. [Pages:4 EA:3 MS:1 CC:3 TDV:1 FS:4]

Ryan, William. 2001. *Gas Cooling in the Era of Deregulation.* ASHRAE Journal. Atlanta GA.

The paper describes how gas and electric deregulation is providing new choices for how to cool buildings. Altnernatives include higher efficiency electric chillers, gas-fired absorbers, gas-fired engine chillers, chilled water storage and ice storage. The alternative all reduce the peak demand load on the building. Distributed generation is another option discussed. [Pages:6 EA:3 MS:1 CC:3 TDV:1 FS:3]

Ryan, William. 2002. *Economics of Cogeneration.* ASHRAE Journal October. Atlanta GA.

The article describes the national economic situation related to electricity prices and available capacity. The efficiency of cogeneration provides additional benefits of higher efficiency and useful waste heat recovery. [Pages:6 EA:3 MS:1 CC:3 TDV:1 FS:3]

Ryan, William. 2002. *New Developments in Gas Cooling.* ASHRAE Journal April. Atlanta GA.

The article is focused on the residential sized generator-absorber heat exhange (GAX) systems that use an ammonia-water solution. The economics of such systems is driven by the relative costs of gas and electricity. Larger GAX system for larger commerical buildings is also described as possibly being available in the future. [Pages:4 EA:3 MS:1 CC:2 TDV:1 FS:3]

Ryan, William. 2003. *New Applications for Gas Cooling.* ASHRAE Journal April. Atlanta GA.

Describes gas cooling technologies that were recently developed at the time of the article. One application in Ohio is micro cogeneration where a microturbine supplies electricity to a building while heat from its exhaust is used for the gas air conditioner. Another application in California is of a ammonia-water absorption cooling in a larger home.An additional application described is of a microturbine serving only the cooling load parasitics and usinng the heat to drive an absorption chiller. The microturbine and chiller follow the cooling load. [Pages:4 EA:4 MS:1 CC:3 TDV:1 FS:2]

Ryan, William. 2004. *Driving Absorption Chillers Using Heat Recovery.* ASHRAE Journal September. Atlanta GA.

Describes the wide use of cogeneration systems and how absorption chillers can be combined with them to provide cooling. Engines provide jacket heat and exhaust heat that can used with single- and double-effect chillers. The performance of heat recovery heat exchangers is described. Sizing and controls is also briefly described. [Pages:7 EA:4 MS:1 CC:4 TDV:1 FS:1]

Salo, Ilkka. 2001. *Local cooling with surplus heat.* ABB Review p 39-43. Switzerland.

The article describes how absorption chillers can be used to provide cooling during the summer months when district heating systems have lower loads. It is demonstrated in Finland and Denmark using lower temperature heat. [Pages:5 EA:3 MS:2 CC:3 TDV:1 FS:1]

Schwedler, Mick. 1987. *Multiple Chiller System Design and Control.* La Cross WI.

This application engineering manual is from a chiller manufacturer and focuses on the design and control of chilled water plants that include mulitple chillers. Although absorption chillers are mentioned most of the discussion is on chiller configuration that

is not specific to gas cooling technologies. Describes many system configurations and pumping arrangements as well as various control sequences. [Pages:100 EA:3 MS:2 CC:5 TDV:1 FS:1]

Schwedler, Mick; Darryl Brunsvold. 1995. *Applications Engineering Manual: Absorption Chiller System Design.* SYS- AM-13

This application engineering manual from a manufacturer of absorption chillers provides an overview of the different cycles. In addition, it describes a simplified economic analysis including maintenance costs. System design considerations including effects of cooling water temperature are described. Special applications such as when heat is available is described. Control options and configuration arrangements in hybrid plants are shown along with installation and maintenance issues. [Pages:75 EA:4 MS:3 CC:4 TDV:1 FS:3]

Schweigler, Chistian J.; Hans-Martin Hellmann. 1998. *Operation and Performance of a 350 kW (100 RT) Single- Effect/Double-Lift Absorption Chiller in a District Heating Network.* ASHRAE SF-98-18-2

The paper describes a double-lift single-effect absorption chiller that is a unique cycle intended for use with district heating systems since it can utilize low temperature heat and return water at appropriate temperatures for a district cooling plant. [Pages:7 EA:3 MS:3 CC:3 TDV:1 FS:1]

Siddiqui, Afzal S.; Ryan M. Firestone; Srijay Ghosh; Michael Stadler; Jennifer L. Edwards; Chris Marnay. 2004. *Distributed Energy Resources Customer Adoption Modeling with Combined Heat and Power Applications.* LBNL- 52718/CEC500-04-006.

A economic model of customer adoption for distributed energy resources is described including combined heat and power applications. Absorption chillers are only briefly mentioned as a method to utilize waste heat. [Pages:126 EA:3 MS:2 CC:3 TDV:1 FS:3]

Siemens. 2004. *Cooling plant optimization application guide.* 125-1898, Version 3

The report is focused on optimization of cooling plants regarding the control system. It includes a good description of many different plant configurations. It includes a chapter on absorption chillers and controls for them as well as a chapter on steam turbine chiller controls. In addition it contains chapters on pumping and hydronics, free cooling, savings measures, and commissioning. [Pages:212 EA:5 MS:5 CC:5 TDV:1 FS:1]

Smith, Brian. 2002. *Economic analysis of hybrid chiller plants.* ASHRAE Journal July p 7. Atlanta GA.

The brief article describes how hybrid chiller plants can be used in conjunction with buildings served by real time pricing or time of use electric rates to reduce the cost of operation. [Pages:4 EA:3 MS:2 CC:3 TDV:1 FS:3]

Southern California Gas Company. 2003. *Gas Cooling Compliance Options for Residential and Non-Residential Buildings.* Code Change Proposal for 2005 Title 24 Building Energy Efficiency Standards Update

The document proposes language changes to Title 24 standards and ACM manuals related to gas cooling. It includes an analysis that justifies the changes and background

on the equipment and how to model the equipment in building energy simulation programs. [Pages:101 EA:4 MS:5 CC:4 TDV:4 FS:3]

Sohn, Chang W.; William T. Brown; Richard E. Rundas; Timothy W. Pedersen; Thomas E. Durbin; Michael A. Caponegro; Daryl Matsui. 1997. *Natural Gas Cooling in DOD Facilities.* Technical Report 97/125

The report "reviewed the status fo the natural gas cooling demonstration programs for DOD facilities to document the progress of the Congressional natural gas cooling projects in various stages of execution." At the time of publication 8 facilities were being designed, 11 were in operation, and contruction was occuring at 23. Feedback from the field on the operation as well as lessons learned from the demonstration project are included. [Pages:33 EA:4 MS:1 CC:4 TDV:1 FS:1]

Soo, S. L.; D. N. Anderson; T. A. Bauch; C. W. Sohn. 1997. *Technical Assessment of Advanced Cooling Technologies in the Current Market.* Technical Report 97/127

The study's objective was to "review cooling technolgies available in the current market and to promote the introduction of advanced cooling technologies to Army facilities." Detailed cost and efficiency information is presented. A life-cycle cost analysis is shown. [Pages:93 EA:4 MS:3 CC:3 TDV:1 FS:3]

Spanwich, Ian. 2003. *Advances in Steam.* ASHRAE Journal September Atlanta GA.

The article describes single- and double-effect absorption chillers and how they can utilize steam to produce cooling. One case study is included of a sports arena at a university. Hybrid plants that include both absorption and electric chillers are discussed. [Pages:5 EA:4 MS:1 CC:3 TDV:1 FS:2]

Sreedharan, Priya; Philip Haves. 2001. *Comparison of Chiller Models for use in Model-Based Fault Detection.*

Describes the use of models to detect problems with the operation of chillers. Several different models are compared. Focused on electric chillers not on gas chillers. [Pages:10 EA:2 MS:5 CC:2 TDV:1 FS:1]

Stambler, Irwin. 2004. *4.6 MW Plant with a Indirect Fired 2600 Ton Chiller at 76.8% Efficiency.* Gas Turbine World

A brief article describing a city of Austin cooling, heating and power plant utilzing a turbine generator and a large absorption chiller. Descriptions of the controls as well as good photos of the installation are included. [Pages:4 EA:4 MS:1 CC:4 TDV:1 FS:1]

Sweetser, Richard. 1996. *Fundamentals of Natural Gas Cooling.* 088173232X

The foreward describes the book as a "primer intended to provide an overview of gas cooling technologies for building owners, architects, engineers, utility representatives, planners and contractors" and most of the book is spent describing the equipment and how it is applied. [Pages:213 EA:5 MS:2 CC:4 TDV:1 FS:1]

Sweetser, Richard; Robert DeVault; Gearoid Foley. 2000. *Absorption Technologies for Buildings: Cooling, Heating and Power (BCHP) Systems.* Heating, Piping and Air Conditioning July p 51 - 56.

The article describes the use of absorption chillers as part of a BCHP system. The sections include Improvements in Absorption Technology, Co-Fired Microturbine Absorption Systems, Air-Cooled Absorption Systems, Turbine Inlet cooling systems, Direct-fired chiller.heater plants, and on-site installations with existing chillers. [Pages:4 EA:4 MS:1 CC:3 TDV:1 FS:1]

Sweetser, Richard; Hugh Henderson; David Brooks; John Berndt. 2000. *Performance of an Engine-Driven/Electric Motor Hybrid Refrigeration System Integrated with Desiccant Dehumidifiers in an Ice Rink.* ACEEE Summer Study

Describes an ice-rink that uses electric and engine-driven chillers for the ice sheet which using the heat from the engine for a desiccant system. The system was instrumented and monitored. [Pages:14 EA:3 MS:2 CC:3 TDV:1 FS:1]

Sweetser, Richard; Bruce Hedman. 2004. *Single Cooling, Heating and Power (CHP) Performance Metric and Energy Savings Assessment.* USDOE Draft Rev 10.

The report attempts to develop a performance metric that will describe the overall performance of a cooling, heating and power system. Seven different example configurations are described along with explanation of how to apply the peformance metrics to each one. [Pages:29 EA:3 MS:2 CC:4 TDV:1 FS:2]

Tecogen. 2000. *Operation and Maintenance - TECOCHILL DTx series gas engine driven chiller.*

The manufacturers manual includes sections on system description, system operation, troubleshooting, and routine service for a model of engine-driven chillers. The manual includes many details that cannot be found in any other location concerning engine-driven chillers. Many sections including toubleshooting and routine maintenance are probably applicable for a wide range of engine-driven chillers even from other manufacturers. [Pages:234 EA:5 MS:1 CC:4 TDV:1 FS:1]

Tecogen. 1995. *Operation Manual - TECOCHILL HT series gas engine driven chiller.*

The manufacturers manual includes sections on system description, system operation, troubleshooting, and routine service for a model of engine-driven chillers. The manual includes many details that cannot be found in any other location concerning engine-driven chillers. Many sections including toubleshooting and routine maintenance are probably applicable for a wide range of engine-driven chillers even from other manufacturers. [Pages:111 EA:5 MS:1 CC:4 TDV:1 FS:1]

Thies, Roger M.; William Bahnfleth. 1998. *Gas-fired chiller-heaters as a central plant alternative for small office buildings.* Heating, Piping and Air Conditioning v 70 n 1 p 103-107, 110-112.

The article describes a case study of a small office building and the economics of installing a gas-fired absorption chiller instead of an electric chiller in the building. It looks at operating and first costs. In addition, the article describes the absorption chiller heater and how it can operate to cool, heat or both. [Pages:8 EA:4 MS:2 CC:3 TDV:1 FS:3]

The Trane Company. 2001. *Absorption Chillers in Commerce.*La Cross WI.

This brochure briefly describes the absorption chillers available from Trane, their advantages, and the type of applications where they are typically used. [Pages:6 EA:3 MS:1 CC:3 TDV:1 FS:3]

The Trane Company. 2003. *Four Times Square.* La Cross WI.

This brochure describes a case study of using absorption chillers as part of the Four Times Square building in New York. [Pages:4 EA:3 MS:1 CC:3 TDV:1 FS:1]

United States Department of Energy. 2000. *Building CHP Technology Roadmap.* Rev 7

The report lays out a roadmap related to CHP technology including reseach into new technnologies, market implementations, and policy and regulations. The report describes an action plan with many specific tasks. Priorities are places on the various tasks described. [Pages:75 EA:3 MS:2 CC:3 TDV:1 FS:1]

United States Department of Energy. 2005. *CHP Calculation Methodology for LEED-NC v2.2 EA Credit 1.*

The short paper addresses how treat combined heat and power systems when getting LEED credit which is regulated by ASHRAE 90.1 appendix G. Four cases are examined depending on the ownership of the CHP and the building, the location of the CHP system, use of the electricity, and whether thermal energy is recovered. [Pages:4 EA:3 MS:5 CC:3 TDV:1 FS:1]

United States Department of Energy. 2002. *CHP Potential at Federal Sites.*

The paper summarizes the results from a in depth report of similar title. Shows the state by state capacity of CHP systems as well as briefly describe what CHP is. According to the paper "nearly all CHP potential is found amoung nine agencies: the three military services, VA hospitals, DOE, NASA, General Services Administration (GSA), the U.S. Postal Service, and the Departmetn of Justice." [Pages:16 EA:3 MS:2 CC:2 TDV:1 FS:2]

United States Department of Energy. 2003. *Thermally Activated Technologies Technolgy Roadmap.*

The executive summary states that the "purpose of this technology roadmap is to outline a set of actions for government and industry to develop thermally activated technology for converting America's wasted heat resources into a reservoir of pollution-free energy for electric power, heating, cooling, refrigeration, and humidity control." Describes a path forward including strategic goals and challenges. [Pages:52 EA:2 MS:1 CC:2 TDV:1 FS:1]

UTC Power, A United Technologies Company. 2006. *PureComfort Cooling Heating & Power Solutions.*

This brochure for a combined cooling, heating and power system from UTC power. Describes the technology of using microturbines and double-effect absorption chillers together. Focused on retail, supermarket, health care, hotels, educational institutions, and public buildings. Shows typical cost savings as well as describes reliability and energy security benefits. [Pages:8 EA:4 MS:1 CC:3 TDV:1 FS:3]

Watt, G. M. 2002. *Gas Cooling in Austrilia: Past, Present and Future.* Official Journal of AIRAH March

According to the paper's abstract it "provides a rundown of the history, status and future of gas-fired air conditioning and refrieration in Australia and reviews the competitive positions of gas cooling

technologies." The paper concludes that maximum potential reduction in CO2 emissions is in the finance, property and business services market sector. [Pages:7 EA:3 MS:2 CC:3 TDV:1 FS:2]

Wisconsin Center for Demand Side Research. 2005. *Optimal Equipment Configurations and Operational Strategies for Hybrid Cooling Systems.* UK.

Focused on cooling systems that include both gas-fired and electrically driven components. Analysis was performed using simple models for buildings and cooling systems. Models for gas engine-driven chillers and absorption chillers are described. Buildings modeled include large office, small office, small retail and large medical. [Pages:64 EA:3 MS:4 CC:3 TDV:1 FS:3]

Woods, Richard R. 1990. *Economic and Market Opportunities for Gas-Fueled Cooling Systems .*

The paper describes the economics of using gas fueled air conditioning systems in general assuming favorable electric and gas rates. It uses simplified nomographs and diagrams to provide a preliminary assessment for single-effect, double-effect and engine-driven chillers. The equivalent full load hours approach is used for the calculations presented. [Pages:15 EA:2 MS:3 CC:2 TDV:1 FS:3]

Wu, D. W.; R. Z. Wang. 2005. *Combined cooling, heating and power: A review.* Progress in Energy and Combustion Science v 32 p 459–495.

This long article describes components of combined cooling, heating and power plants and includes numerous references. A significant portion of the article is devoted to development of combined cooling, heating and power systems throughout the world. Over 100 references are cited in this review article. [Pages:37 EA:3 MS:1 CC:3 TDV:1 FS:2]

Wurm, J. 1988. *Assessment of Absorption Cooling Technology- Final Report.* GRI-94/0270

Looks at manufacturing costs for absorption chillers and how they can be reduced. Examines specific components in absorption chillers and how they are manufactured and how they could be manufactured using less costly methods. Also examines if new technologies could reduce manufacturing costs. [Pages:58 EA:4 MS:1 CC:3 TDV:1 FS:1]

York. 2002. *Chiller-Plant Design in a Deregulated Electric Environment.*

The article describes how electric deregulation may result in much more expense peak energy costs, perhaps through real time pricing rates. These higher costs may prompt the use of alternative chiller configurations. The article describes a baseline all electric plant using two centrifugal chillers as well as plants with an one electrical centrifugal chiller and a gas chiller such as a single-effect absorption chiller, double-effect

absorption chiller, and gas engine-driven centrifugal chiller. Paybacks ranged from one-half to 5 years. [Pages:6 EA:4 MS:4 CC:3 TDV:1 FS:3]

Zhong, Yongfang; Guangming Chen. 2004. *Theoretical and Experimental Study of a New Absorption Refrigeration Cycle.* ASHRAE AN-04-7-2

The abstract states "a new auto-cascade absorption refrigeration cycle is proposed to obtain low refrigerating tempertures in order to widen the industry application of absorption refrigeration. The characteristics of the new cycle are analyzed and compared to those of the traditional single-effect absorption refrigeration cycle theoretically. Preliminary experiments are conducted and provide valuable experience for further research." [Pages:7 EA:3 MS:3 CC:3 TDV:1 FS:1]

Zogg, Robert; Kurt Roth; James Brodrick. 2005. *Using CHP Systems in Commercial Buildings.* ASHRAE Journal September Atlanta GA.

Describes the use of combined heat and power plants in commercial buildings and how they can also provide cooling via absorption and desiccant systems. The energy savings potential and market factors are also deescribed. [Pages:2 EA:3 MS:1 CC:3 TDV:1 FS:2]

Zogg, Robert A.; Detlef Westphalen. 2006. *Guide to Developing Air-Cooled LiBr Absorption for Combined Heat and Power Applications.* HVAC and R Research v 12 n 3 B p 731-747.

The report is focused on applications of absorption chillers in the range of 10 to 150 tons. The chillers in this range are air cooled. Crystalization is a bigger risk with air cooled operation because of higher heat rejections temperatures. Technologies to address this are different solution chemistry, a rotating absorber, and intermittant evaporative cooling. A list of past efforts and related patents is included. [Pages:50 EA:4 MS:1 CC:4 TDV:1 FS:1] Appendix A: Gas Cooling Configurations and Options

The Application Summary (Appendix F), design guides and other promising items found from the annotated bibliography were reviewed for configurations or configuration options.

Section 4.0, Gas Cooling Configurations, contains nine figures that use a range of configurations and options. The items shown with an asterisk are directly represented in one of the nine figures. The remaining items are described as possible options to those nine figures where appropriate.

Chiller configurations

Constant flow single gas or thermal chiller*

Two chillers in series with lead chiller being gas or thermal chiller*

Two chillers in series with lag chiller being gas or thermal chiller

Primary only variable flow single gas or thermal chiller

Two or more chillers in parallel with primary only variable flow with one, some or all being gas or thermal chillers*

Two or more chillers in parallel with primary/secondary pumping (decoupled) with one, some or all being gas or thermal chillers*

Two or more chillers in parallel with primary/secondary pumping (decoupled) with one being a gas or thermal chillers and bypass located after all chillers which will load gas or thermal chiller *

One or more electric chillers in parallel with primary/secondary pumping (decoupled) with one gas or thermal chiller in series with chilled water return prior to bypass often called a sidestream configuration *

Two or more chillers in parallel with bypass with constant flow pumps and variable flow chilled water pump and valves to isolate the operation of each chiller often called variable priority pumping

Chiller Options

Gas or thermal chiller options include:

Single-effect steam driven absorption

Single-effect hot water driven absorption

Double-effect steam driven absorption*

Double-effect turbine exhaust driven absorption*

Natural gas direct-fired single-effect absorption

Natural gas direct-fired double-effect absorption*

Steam turbine driven reciprocating compressor chiller

Steam turbine driven screw compressor chiller

Steam turbine driven scroll compressor chiller

Steam turbine driven centrifugal compressor chiller

Engine driven reciprocating compressor chiller

Engine driven screw compressor chiller

Engine driven scroll compressor chiller

Engine-driven centrifugal compressor chiller.

Chilled water options include:

Constant chilled water flow

Variable chilled water flow

In configurations with two or more chillers, make the chiller sizes equal.

In configurations with two or more chillers, make the chiller sizes unequal.

Chilled Water Configuration Options

Option of ice storage.

Option chilled water storage.*

Optional heat exchanger in parallel with chillers to allow for heat exchange between condenser water and chilled water.*

Condenser Water Configuration Options

Gas and thermal chiller or chillers sharing same condenser water circuit with other chillers.*

Gas and thermal chiller or chillers using separate condenser water circuit than other chillers.*

Gas and thermal chiller or chillers using air cooled condensers.*

Option to use of a deep well to provide condensing water instead of a cooling tower.

Lakes, rivers, and other bodies of water may be used for rejecting heat instead of a cooling tower.

Absorption Chiller Heat Source Options

Option for when single-effect absorption chillers include using district steam.

Option for when absorption chillers include using gas boiler.*

Option for when single-effect absorption chillers include using district steam that was reduced in pressure using a turbine generator.

Option for when using steam driven or hot water driven absorption

chiller includes using condensate after chiller to preheat domestic hot water.

Option for double effect absorption chiller with turbine generator to use exhaust gases directly in absorber.*

Natural gas engine generator creates hot water and electricity and hot water is used to drive single effect absorption chillers.

Natural gas micro-turbine generator creates electricity and exhaust gases and the heat from the exhaust gases are recovered and are used to drive an absorption chiller.

Natural gas turbine generator creates electricity and exhaust gases and the heat from the exhaust gases are recovered and are used to drive an absorption chiller.

Industrial process creates excess hot water used to drive the absorption system.

Industrial process creates hot air or gas stream that goes through heat exchanger to create hot water to drive the absorption system.

Industrial process creates hot air or gas stream directly used in the absorption chiller.

Solar assisted to warm water prior to boiler and feed into absorption chiller.

Miscellaneous Absorption Options

Option for direct-fired absorption chillers can also provide hot water for space heating, domestic hot water or other hot water load. This option is usually referred to as chiller/heater.*

For residential and light commercial applications, an ammonia-water absorption chiller cycle coupled with an air cooled condenser may be used.

For low temperature industrial processes, an ammonia-water absorption chiller cycle may be used.*

Engine Chiller Options

Option for engine-driven chillers is having electric motor parallel driveline so compressor can be driven by engine or electric motor.

Options for engine driven chiller heat recovery from intercooler, lube oil, jacket heat, or exhaust.*

Option for engine driven chiller is using it to drive refrigeration system.

Option for engine driven chiller is using it to freeze an ice skating rink.

Option for engine-driven chiller is to use ammonia for refrigerant.

Option for engine-driven chiller is to use ammonia for refrigerant for lower temperature refrigeration applications.*

Engine Chiller Waste Heat Output Utilization Options

Option for engine-driven chillers is to use waste heat recovered for desiccant recharging.

Option for engine-driven chillers is to use waste heat recovered for domestic hot water.*

Option for engine-driven chillers is to use waste heat recovered for swimming pool.

Option for engine-driven chillers is to use waste heat recovered for laundry.

Option for engine-driven chillers is to use waste heat recovered for kitchen.

Generator Options

Waste heat from a generator can also be used with a solid desiccant system to reduce humidity in the outside air intake.

A turbine generator with absorption can use the chilled water produced by the absorber to cool the inlet air to the turbine.

To recover high temperature heat from a turbine generator and special transfer fluid may be used such as an oil.

Options for engine generator heat recovery from intercooler, lube oil, jacket heat, exhaust.*

Multiple stages of heat exchange from generator waste heat, the first being the hottest for an absorption chiller and the second stage being for service hot water.

If exhaust heat is not sufficient from turbine generator, a duct heater can be used to supplement the waste heat produced.*

Steam turbine generator can be driven from gas turbine heat recovered through heat recovery steam generator.

Natural gas turbine-generator that has direct drive to open driven chiller.*

Steam Turbine Chiller Options

Option for steam turbine driven chillers includes single stage absorption chillers to recover heat remaining after the turbines.

Open Drive Chiller Options

Open drive chillers can be reciprocating, screw or centrifugal.*

Waste Heat Recovery Options

Option for waste heat recovered is to have supplementary boiler or supplementary burner.

Use heat recovery steam generator from high temperature source.*

Desiccant can use exhaust gases to regenerate or hot water recovered from exhaust using heat exchanger. Appendix B: Gas Cooling Decision Process Diagram

Page 1

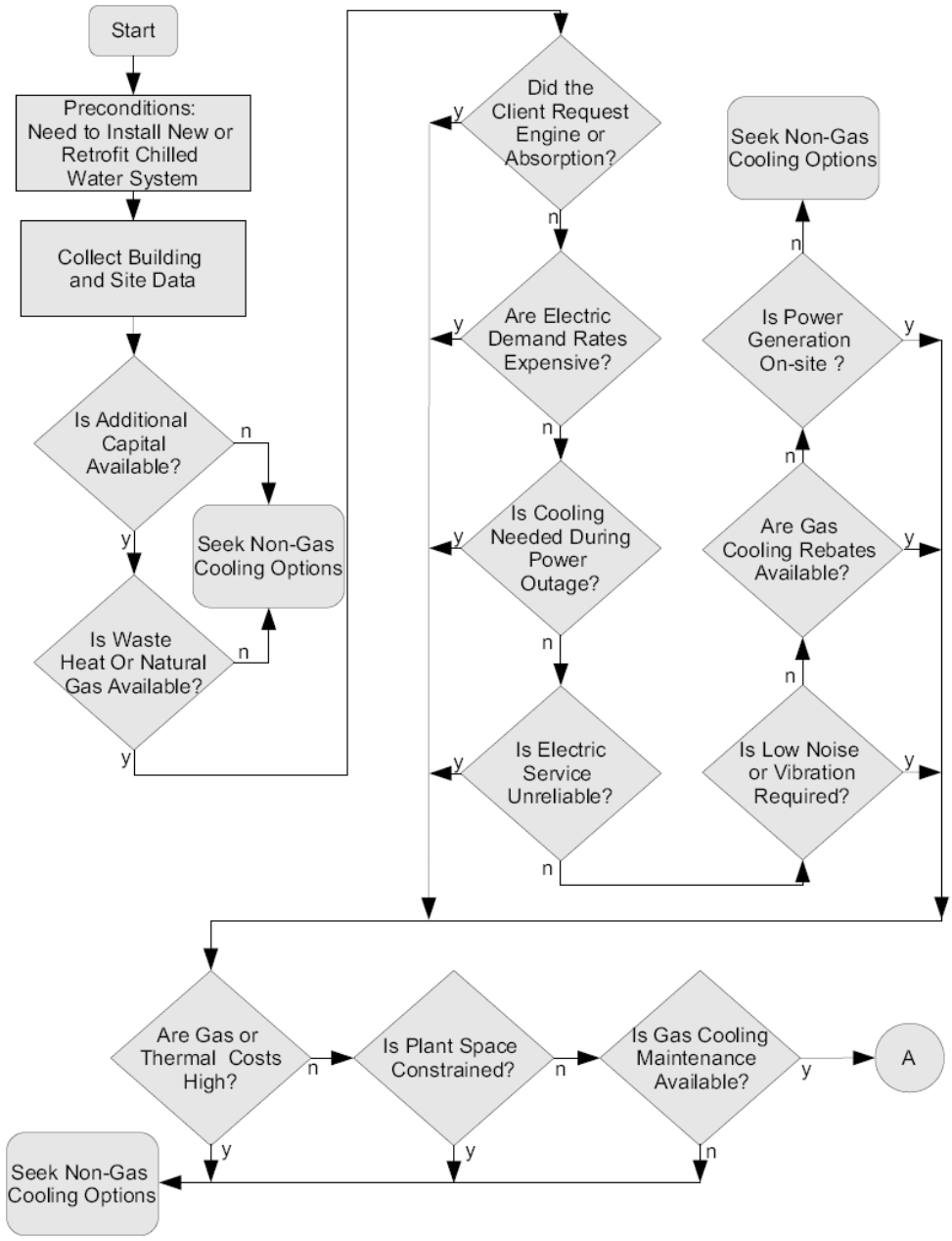
Start
Preconditions: Need to Install New or Retrofit Chilled Water System
Collect Building and Site Data
Is Additional Capital Available?
n
y
Seek Non-Gas Cooling Options
Is Waste Heat Or Natural Gas Available?
n
y
Did the Client Request Engine or Absorption?
y
n
Are Electric Demand Rates Expensive?
y
n
Is Cooling Needed During Power Outage?
y
n
Is Electric Service Unreliable?
y
n
Seek Non-Gas Cooling Options
n
Is Power Generation On-site ?
y
n
Are Gas Cooling Rebates Available?
y
n
Is Low Noise or Vibration Required?
y
n
Are Gas or Thermal Costs High?
n
y
Is Plant Space Constrained?
n
y
Is Gas Cooling Maintenance Available?
y
n
A
Seek Non-Gas Cooling Options

Page 2

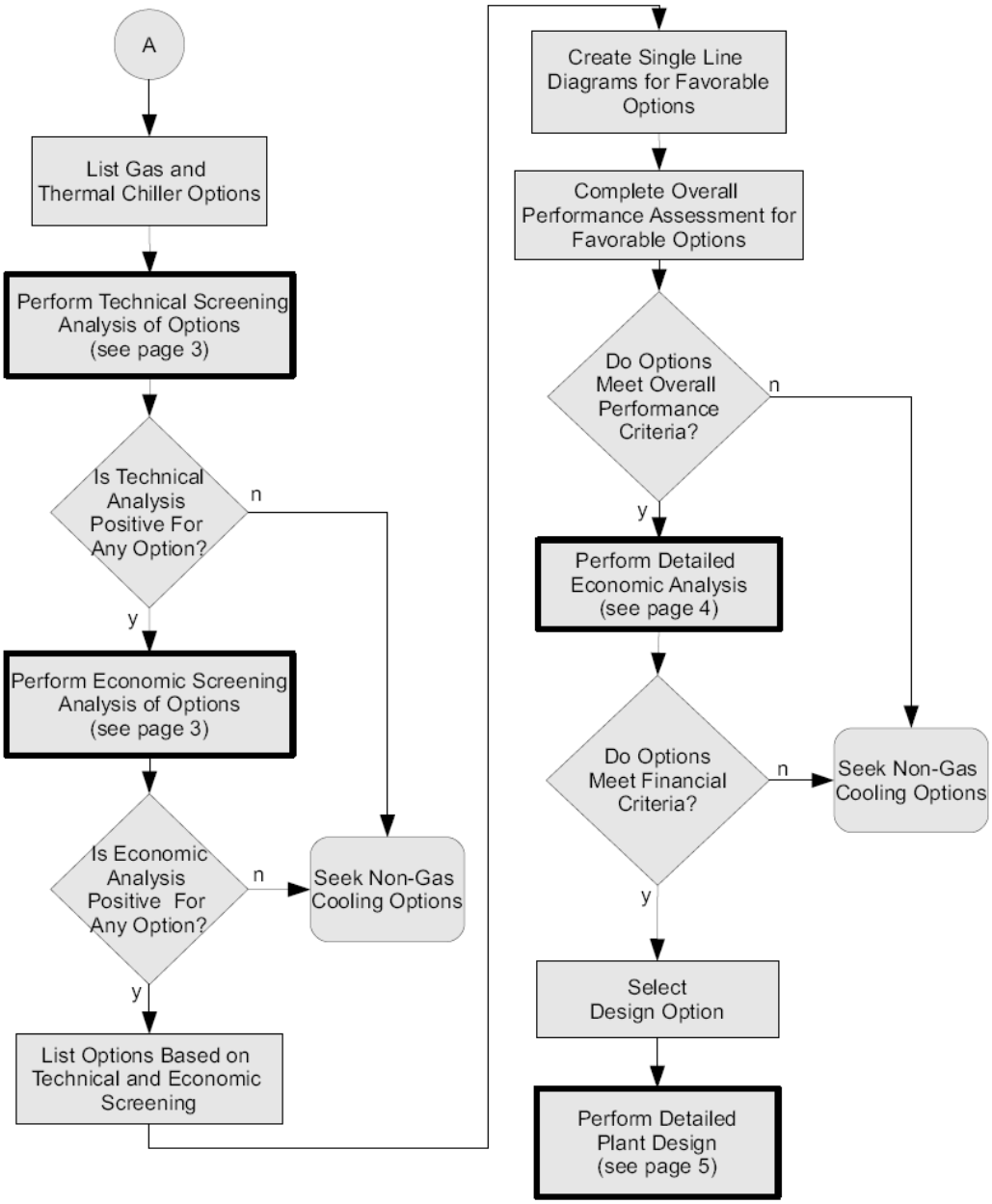
A
List Gas and Thermal Chiller Options
Perform Technical Screening Analysis of Options (see page 3)
Is Technical Analysis Positive For Any Option?
n
y
Perform Economic Screening Analysis of Options (see page 3)
Is Economic Analysis Positive For Any Option?
n
Seek Non-Gas Cooling Options
y
List Options Based on Technical and Economic Screening
Create Single Line Diagrams for Favorable Options
Complete Overall Performance Assessment for Favorable Options
Do Options Meet Overall Performance Criteria?
n
y
Perform Detailed Economic Analysis (see page 4)
Do Options Meet Financial Criteria?
n
Seek Non-Gas Cooling Options
y
Select Design Option
Perform Detailed Plant Design (see page 5)

Page 3

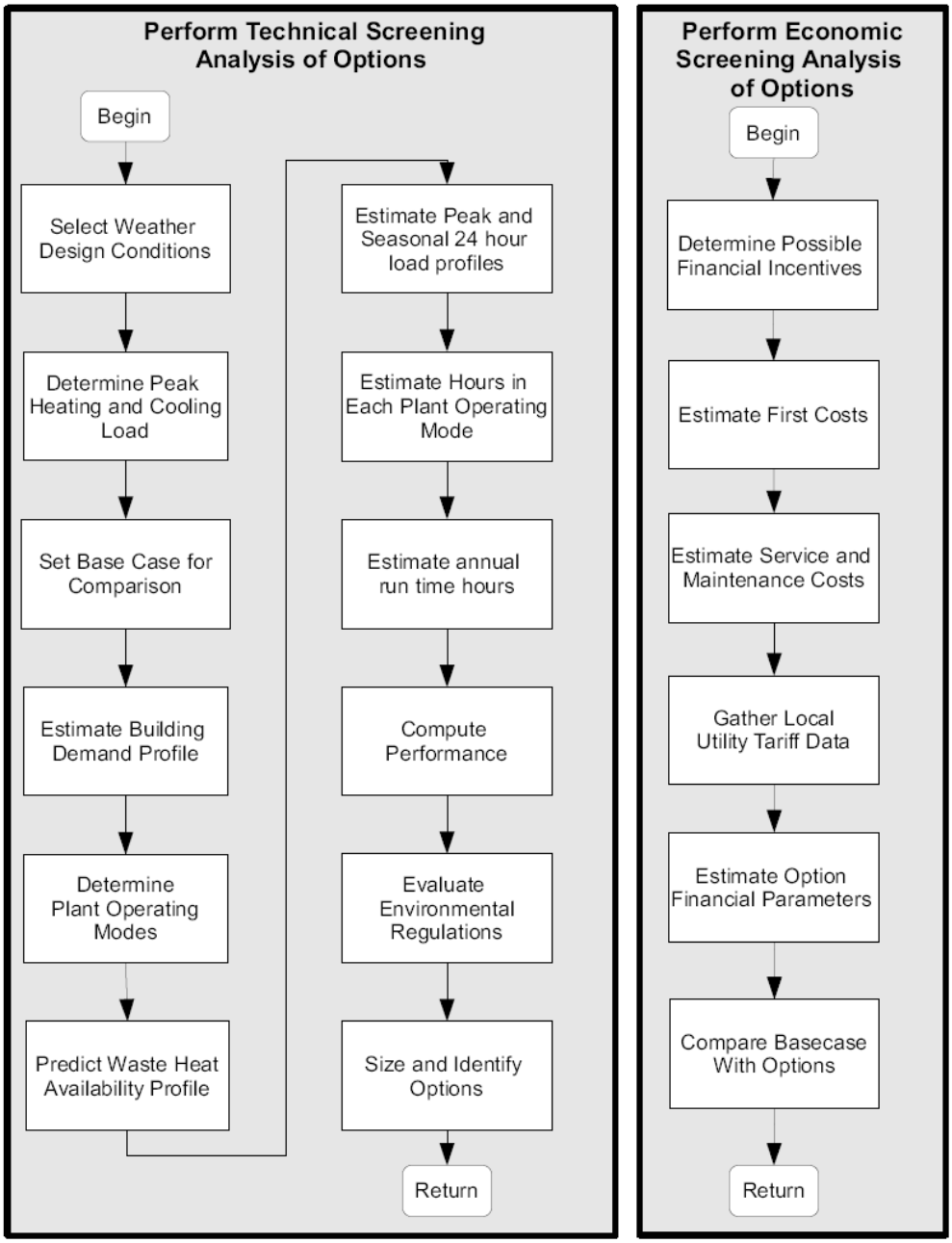
Perform Technical Screening Analysis of Options
Begin
Select Weather Design Conditions
Determine Peak Heating and Cooling Load
Set Base Case for Comparison
Estimate Building Demand Profile
Determine Plant Operating Modes
Predict Waste Heat Availability Profile
Estimate Peak and Seasonal 24 hour load profiles
Estimate Hours in Each Plant Operating Mode
Estimate annual run time hours
Compute Performance
Evaluate Environmental Regulations
Size and Identify Options
Return
Perform Economic Screening Analysis of Options
Begin
Determine Possible Financial Incentives
Estimate First Costs
Estimate Service and Maintenance Costs
Gather Local Utility Tariff Data
Estimate Option Financial Parameters
Compare Basecase With Options
Return

Page 4

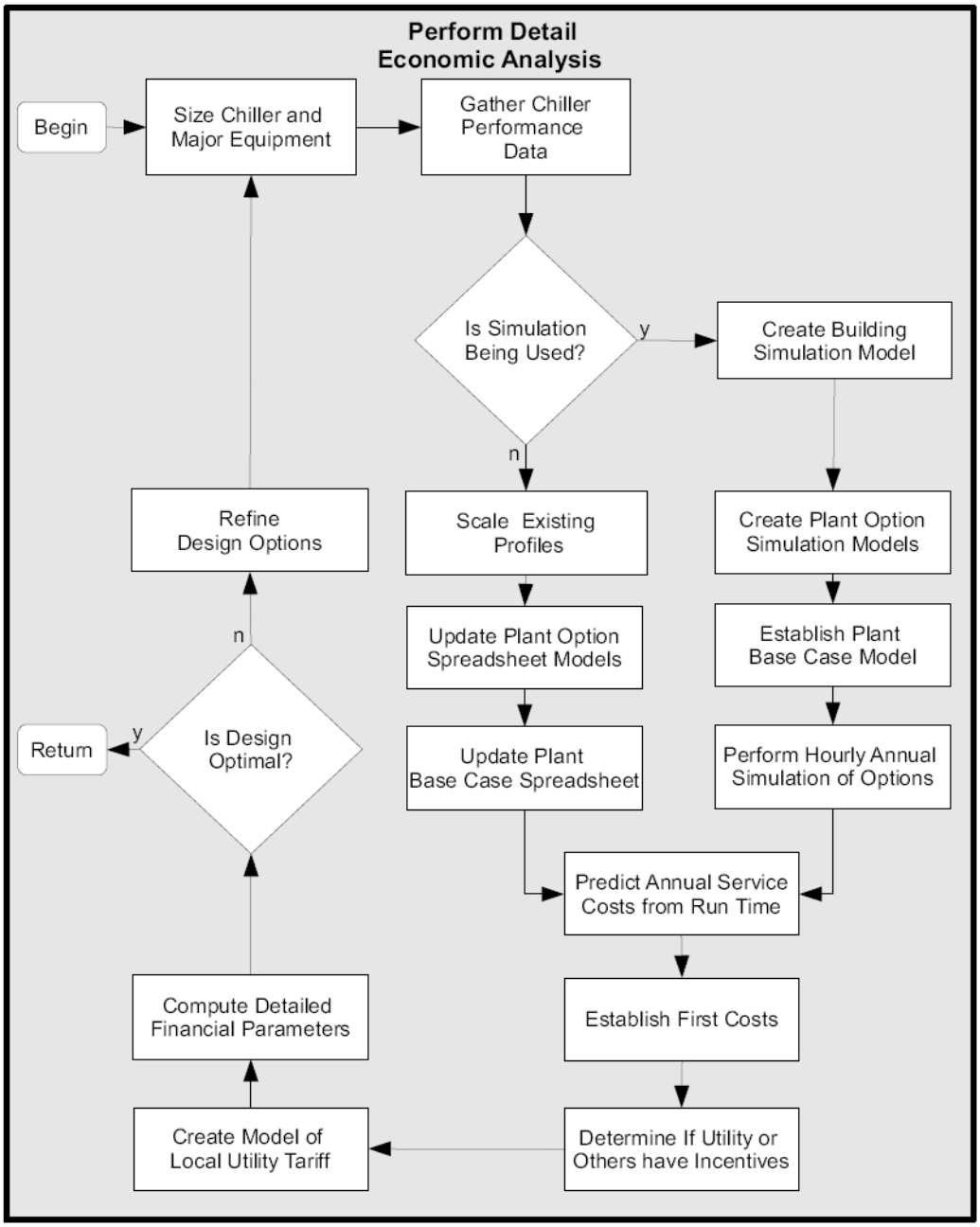
Perform Detail
Economic Analysis
Begin
Size Chiller and Major Equipment
Gather Chiller Performance Data
Is Simulation Being Used?
y
Create Building Simulation Model
n
Refine Design Options
Scale Existing Profiles
Create Plant Option Simulation Models
Update Plant Option Spreadsheet Models
Establish Plant Base Case Model
n
Return
y
Is Design Optimal?
Update Plant Base Case Spreadsheet
Perform Hourly Annual Simulation of Options
Predict Annual Service Costs from Run Time
Compute Detailed Financial Parameters
Establish First Costs
Create Model of Local Utility Tariff
Determine If Utility or Others have Incentives

Page 5

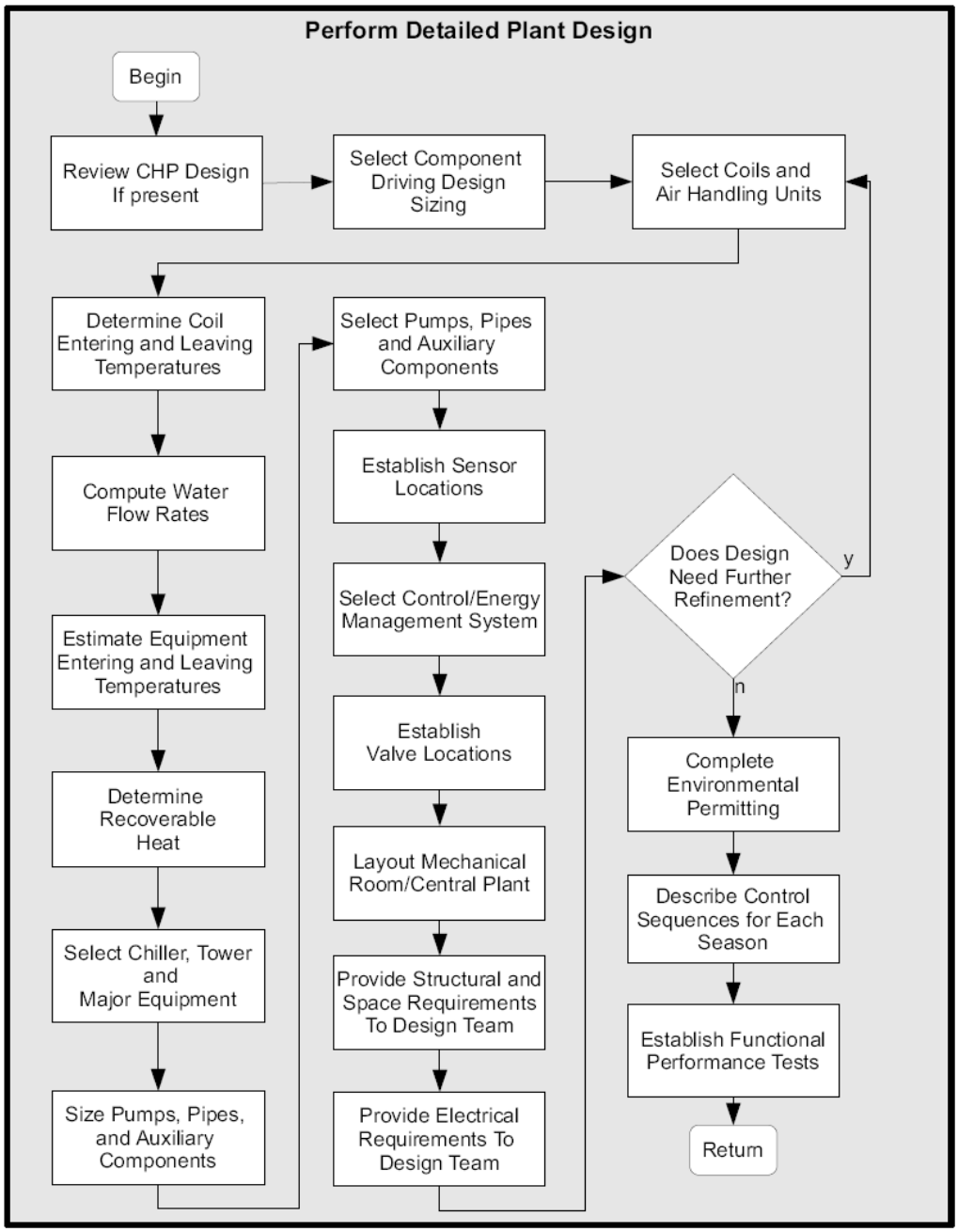
Perform Detailed Plant Design
Begin
Review CHP Design If present
Select Component Driving Design Sizing
Select Coils and Air Handling Units
Determine Coil Entering and Leaving Temperatures
Compute Water Flow Rates
Estimate Equipment Entering and Leaving Temperatures
Determine Recoverable Heat
Select Chiller, Tower and Major Equipment
Size Pumps, Pipes, and Auxiliary Components
Select Pumps, Pipes and Auxiliary Components
Establish Sensor Locations
Select Control/Energy Management System
Establish Valve Locations
Layout Mechanical Room/Central Plant
Provide Structural and Space Requirements To Design Team
Provide Electrical Requirements To Design Team
Does Design Need Further Refinement?
y
n
Complete Environmental Permitting
Describe Control Sequences for Each Season
Establish Functional Performance Tests
Return

APPENDIX C:
Survey for Design and Operation of Gas and Thermal Chillers

We are attempting to document best practices in the design and operation of gas and thermal chillers in central chilled water plant design. We would appreciate you completing the following brief survey. Please specify what kind of chillers you are referring to in each question. Please feel free to describe the practice in as much detail as possible.

Design of Central Chilled Water Plants Using Gas and Thermal Chillers

What are the best uses for these chillers?

For the uses identified in #1 above, what are the preferred plant configurations to best utilize the chiller's capabilities?

Under what circumstances of electric prices, gas prices, and building loads would you consider the use of these chillers in your design options?

Please identify potential design options that help minimize maintenance costs?

Please identify potential design options that minimize annual operating cost?

When using these chillers, particularly in a hybrid plant, which design options result in the simplest plant to operate?

What design options are the simplest to specify?

What is the best combination of these chillers and electric chillers?

104

For plants which include electric chillers with series chiller configurations:

Where should the electric chiller be placed? How would each chiller be sized (based on delta T)?

Which gas and/or thermal chiller technologies are best suited for this application?

For plants which include electric chillers with parallel chiller configurations:

Please discuss how each chiller in the plant is sized?

Which gas and/or thermal chiller technologies are best suited for this application?

What are the best chilled water piping configurations: primary only, primary secondary, other?

What are the best condenser water piping configurations: dedicated or mixed use cooling towers?

Options for sequencing and control:

Which of the following reset strategies can be used in plants with gas and thermal chillers: chilled water supply temperature, condenser water supply temperature, cooling tower fan speed; other (please define)

Which of the following reset strategies can be used in hybrid plants: chilled water supply temperature, condenser water supply temperature, cooling tower fan speed; other (please define)

What strategy is used to stage chillers on and off

Other?

What are the best design options for other components of such a chilled water plant?

What special tools are used in the design process when including gas and thermal chillers?

What additional tools would be useful for the design these chilled water plants?

Operation of Central Chilled Water Plants Using Gas and Thermal Chillers

What operational approaches are used to minimize annual operating costs?

What operational approaches are used to maximize the life of these chillers?

What unique operating practices have you adopted or seen adopted?

What can be done to simplify the operation of these chillers?

What changes in central plant design would improve the operation of these chillers?

What tools including software are used in the operation of the plant?

What additional tools would be useful for the operation the plant?

Please identify any best practices you may have learned for operating the plant?

Are control strategies specified during design typically implemented successfully? If not, what recommendations would you make to improve the outcome?

For plants with multiple chillers, what strategy, if any, is used for enabling or disabling a chiller with the seasons or other outside influence?

APPENDIX D:
Customer Issues Survey

Gas Cooling Customer Interview/Survey Questions

Plant Owner/Operator Name and Location (Information already available from project profiles):

Name and Job Title of the Interviewee/Person Answering the Questionnaire: **Name: Title:**

What is the heat source for your gas cooling system? □ Natural gas □ Gas turbine exhaust

Engine exhaust □ Engine jacket water □ Microturbine exhaust □ Boiler

What is the heat source medium for your gas cooling system? □ High-pressure steam □ Low-pressure steam (12 psig) □ Hot water □ Natural Gas

Which gas cooling technologies are you using? □ Double-effect steam heated ($LiBr/H_2O$) □ Single- effect steam-heated ($LiBr/H_2O$) □ Single-effect water-heated ($LiBr/H_2O$) □ Steam turbine-driven mechanical □ Direct-fired double-effect ($LiBr/H_2O$) □ Other (Pease specify):

When was gas cooling brought online? ___

How many total number, and what type and capacity of chillers do you have at your facility? □

Electric Total number: ; and Individual capacities: -------Tons ;

Gas Cooling Total number: ; and Individual capacities: -------Tons

What chiller configuration are you using at your facility?

□ Single gas or thermal chiller: □ Constant-flow □ Variable-flow

□ Two chillers in series: Lead chiller is □ Thermal or □ Electric

□ Two or more chillers in parallel: □ Primary only variable flow □ Primary/Secondary pumping decoupled; Other (Please specify): The decision for the lead chiller changes with the electric and gas prices for the day _____

What are your reasons for choosing the heat source you selected for your gas cooling system?

What are your reasons for choosing the gas cooling technology you selected for your facility?

What are your reasons for choosing the chiller configuration you selected for your facility?

What is your experience with the operational capacity performance delivered by your gas cooling system (Relative to the rated capacity)?

108

Better than the rated capacity; Tons □ Rated capacity □ Less than the rated capacity;_ Tons

What is your experience with the operational efficiency performance delivered by your gas cooling system (Relative to the rated efficiency):

Better than the rated efficiency; _ % □ Rated efficiency □ Less than the rated efficiency; _ %

How do you like the operational control flexibility of your gas cooling system with the prime mover?

Very flexible (No Problems) □ Okay (No Major Problem) □ Very difficult □ Not applicable

How does your gas cooling system interface/Integrate with your direct digital control system?

Better than expected □ As expected □ Worse than expected □ Do not have DDC

How would you rate the reliability of your gas cooling system?

Less than expected □ As expected □ Greater than expected

How would you rate your maintenance experience with your gas cooling system?

More difficult than expected □ As expected □ Easier than expected

What is your experience with the cost of maintaining your gas cooling system?

Higher than expected □ As expected □ Lower than expected;
What is your annual cost for maintaining it? $____

Who maintains your gas cooling system? □ Your own personnel □ An outside contractor

How would you rate your overall experience with gas cooling?

Excellent □ Good □ Fair □ Poor

If you had a choice, would choose gas cooling again? □**Yes** □ **No**

Based on your experience with gas cooling what would you like to suggest to gas cooling equipment OEMs to make gas cooling more attractive to you?

If necessary, is it Okay with you if we talk with the engineering company that designed and installed your gas cooling system? □ Yes □ No

APPENDIX E:
Complete List of Research Opportunities

The opportunities identified in this report are divided in to four areas:

Chiller Enhancements

Engineering Selection Support

Engineering Design Support

Operation Support

The order of listing of research opportunities in the above areas does not necessarily represent the order of priority in which the information/tool should be developed. Some opportunity statements are followed by comments from the project team (shown in italics) relating to the opportunity.

Chiller Enhancements

For absorption chillers, many different cycles are possible and more are being developed. Several years ago the GAX cycle was applied to very small single effect chillers to increase their efficiency. It is possible that research into other existing cycles would result in higher performance and less expensive absorption chillers. (Soo 1997, Fineblum 2001, Zhong 2004, Zogg 2006, Erickson 2004, Grossman 2005,

Ludovisi 2007)

Important but not a priority to the end-user; could be high risk.

The possibility of crystallization in absorption chillers has been reduced by better controls and chemical monitoring. Additional additives could reduce the chance of crystallization further without significant impact on heat transfer. (Sweetser 2000)

Many companies have such products, but their performance in the field needs to be better monitored and analyzed since some of the claims seem dubious.

Many of the components of absorption chillers could be reengineered to possibly reduce their first cost.

Cost reductions would result in a small overall premium for absorption chillers compared to other chillers. (Wurm 1988)

High priority.

If necessary, perform research to develop a direct-fired absorption chiller that does not require operation on a weekly basis to purge air leaks. (Punwani 2009 Item 1)

Currently, absorption chillers can cost more to maintain than electric chillers of the same capacity.

Reducing the maintenance costs to be comparable to electric chillers would increase their use. Develop an absorption chiller that is simpler to maintain with reduced maintenance costs. Simplifying the maintenance would also make it more likely that service providers, other than manufacturers, would provide maintenance. (Punwani 2009 Items 2 and 3)

High priority.

Develop absorption chillers that can operate properly with lower condenser water temperatures. (Punwani 2009 Item 4)

110

Some absorption chillers use hot water as the energy into the absorption cycle to produce chilled water.

These chillers need hot water provided over a specific temperature range. Research should be performed to develop an absorption chiller that increases the temperature range so that waste heat and recovered heat from other processes can be utilized even when performing at various part loads. (Punwani 2009 Item 5)

Looks interesting.

Current absorption chillers often require much more space in the mechanical room compared to electric chiller of similar capacity. Perform research to develop an absorption chiller with a reduced footprint comparable to electric chillers. This would decrease one barrier for specifying absorption chillers. (Punwani 2009 Item 7)

Important to the end-user.

Engineering Selection Support

Systems that include on-site power generation with heat recovery used by an absorption chiller are complex to engineer. To overcome this complexity, prepackaged or pre-engineered designs can reduce the effort to specify them. Research and development can be performed to create these prepackaged or pre-engineered solutions for a variety of applications and capacities including their control systems. (LeMar 2002, Pathakji 2005, United States Department of Energy 2000)

Develop metrics for plants combining power generation, heat recovery, and absorption chillers. It is difficult to describe the overall efficiency of these systems and compare them to the existing metrics describing more conventional chilled water plants. By establishing standard metrics for more complex plant configurations, they can be more easily compared. (Sweetser 2004)

Much work already done and equations proposed; the problem is that there is no clear cut definition on which everyone can agree.

Enhance building energy simulation software tools to better support the detailed performance and options of engine and absorption chillers as well as complex configurations such as absorption chillers as part of an on-site power generation system with heat recovery. (United States Department of Energy 2000)

Existing tools may be adequate, but need to be made more user-friendly; a more in depth evaluation might be benefitial.

Develop a library of models and example files for modern building energy simulation tools containing specific engine and absorption chillers as well as example configurations for absorption chillers as part of an on-site power generation system with heat recovery. (United States Department of Energy 2000)

This has been done to some extent. Not a high priority.

Develop an easy to use and flexible software screening tool using a modern building energy simulation program to help understand the economics of using gas and thermal chillers with and without power generation and heat recovery compared to more typical chilled water plant designs. (United States Department of Energy 2000)

Such tools exist but can always be tweaked and improved upon; many are proprietary.

111

Many facilities, such as wastewater treatment and municipal solid waste landfills as well as industrial and agricultural waste processing, may produce biogas that can be utilized for heating and cooling with engine and absorption chillers. Provide engineering and technical support for these applications and information on the locations and availability of biogas. (United States Department of Energy 2003)

CHP centers currently do this already, however they could use more funding in the area.

Engineering Design Support

Explore control and supervisory control options for absorption chillers in chilled water plants alone or when coupled with electric chillers or with power generation and heat recovery and create example control sequences and point lists and how they should be integrated into building automation systems. (Koeppel 1995, Katipamula 2006, Maor 2008, Maor 2009)

High priority.

Create standard design guide and commissioning procedures for absorption and engine chillers. (Sohn 1997)

One attempt at this was done by NYSERDA; a commissioning procedure is available in PECI's literature.

Additional research is required in the area of optimal controls for absorption chillers when coupled with on-site power generation with heat recovery systems including sensitivity to simplifying assumptions, improvements in equipment models, effect of uncertainties, refinement of objective function, time step simulation, improvement in definition of optimal control, alternative near-optimal strategies, continuous control, maximizing efficiency, minimizing operating costs, following the thermal loads, and implementation of prototype controls. (Maor 2008, Maor 2009, Katipamula 2006, United States Department of Energy 2000).

High priority.

Guidance on how to provide for emissions monitoring, reporting and control related to absorption chillers when used alone or with on-site power generation and heat recovery systems. (Katipamula 2006)

Important.

Guidance on how to provide for monitoring of input contaminants related to absorption chillers when used alone or with on-site power generation and heat recovery systems. (Katipamula 2006)

Operation Support

Create fault detection and diagnosis model for absorption chillers and engine driven chillers as well as condition based maintenance procedures. (Sreedharan 2001, Katipamula 2006)

High priority.

Create functional performance tests for absorption and engine chiller installations for a variety of configurations – relates to item 16). (Elleson 1997)

Important.

112

Provide operation decision support and guidance concerning economic dispatch for chilled water plants using absorption chillers with on-site power generation and heat recovery. This should include guidance how to provide forecasting of thermal and electric loads to optimize the dispatch sequence for chillers and generators. (Katipamula 2006).

High priority - overlaps with item 17.

Provide guidance on methods to monitor performance of individual components for chilled water plants using absorption chillers with on-site power generation and heat recovery. (Katipamula 2006).

Monitor existing gas and thermal chiller installations to validate models used in modern building energy simulation programs. (United States Department of Energy 2000)

High priority.

For absorption chillers without automatic purging systems, develop an add-on to existing chillers to automate regular purging. (Punwani 2009 Item 6)

APPENDIX F:
Additional References on Optimal Plant Control

The following section includes references on controls for chilled water plants. They are not specific to thermal or gas chillers but are included because they are related. They were not reviewed and not annotated. The references were provided by Agami Reddy.

ASHRAE, 2007. HVAC Applications, Chapter 41: Supervisory Control Strategies and Optimization, ASHRAE Atlanta, GA.

Baughman, M. L., N. A. Eisner and P. S. Merrill, 1989. Optimizing Combined Cogeneration and Thermal Storage Systems: An Engineering Economics Approach. *IEEE Trans. on Power Systems*, Vol. 4, No. 3, August 1989.

Jiang, W. 2005. "Framework Combining Static Optimization, Dynamic Scheduling and Decision Analysis Applicable to Complex Primary HVAC&R Systems", Ph.D. thesis, Civil Architectural and Environmental Engineering Department, Drexel University, December.

Jiang, W., and T.A. Reddy, 2007. Combining Engineering Optimization of Primary HVAC&R Plants with Decision Analysis Methods- Part I: Deterministic Analysis, *HVAC&R Research Journal*,13(1), p.93, January.

Jiang, W., T.A. Reddy and P. Gurian.2007. Combining Engineering Optimization of Primary HVAC&R Plants with Decision Analysis Methods- Part II: Uncertainty and Decision Analysis, *HVAC&R Research Journal*, 13(1), p.119, January.

Massie, D. D., 2002. Optimization of a Building's Cooling Plant for Operating Cost and Energy Use.

International Journal of Thermal Sciences 41 (2002) 1121–1129.

Olson, R.T., 1988. Optimal allocation of building cooling loads to chilled water equipment. Ph.D. dissertation, University of Illinois at Urbana-Champaign.

Olson, R.T., and J.S. Liebman, 1990. Optimization of a chilled water plant using sequential quadratic programming. *Engineering Optimization* Vol. 15, pp171-191.

Olson, R.T., C.O. Pedersen and J.S. Liebman, 1993. A dynamic procedure for the optimal sequencing of plant equipment part I: algorithm fundamentals. *Engineering Optimization* Vol. 21(1), pp63-78.

Olson, R.T., C.O. Pedersen and J.S. Liebman, 1994. A dynamic procedure for the optimal sequencing of plant equipment part I: validation and sensitivity analysis. *Engineering Optimization* Vol. 22, pp163-183.

APPENDIX G:
Current Gas Cooling Applications

Office Buildings

A 32 year old office building on Walnut Street in Philadelphia with 352,000 square feet on 25 floors including five floors of parking was served by a local district steam system, Trigen. The CFC-based electric chillers were replaced with a single-stage absorption chiller and an electric centrifugal chiller of equal size. A backpressure turbine generator took the district steam delivered at 170 psig and reduced it to 15 psig while generating 150 kW of electricity for the building motor control center. The chiller utilized the 15 psig steam and the condensate from the absorber went through a heat exchanger to preheat domestic hot water for the building. Reasons for conversions were: First, Pennsylvania had recently started electric deregulation, and no one could really predict where electric prices were going. Consequently, they didn't want to rely solely on electric chillers to cool the building for the next 25 to 30 years. Secondly, the owners were looking for the lowest possible first cost. In exchange for a long-term agreement, Trigen offered an attractive rebate program that could pay for a portion of the new steam cooling equipment. Thirdly, Trigen also had an attractive rate for cooling steam consumption that was competitive with the alternative utility. Finally, Trigen also offered to provide a 150-kW backpressure turbine generator as part of the rebate package." (Anonymous 2001)

A 48 story, 1.9 million square foott office building built in 1959 is occupied by Time & Life. The plant was designed by Atkinson Koven Feinberg Engineers LLP (AKF). The plant consistes of a 2100 ton electric chiller, 1500 ton steam-turbine-driven chiller and two 1850 ton gas engine-driven chillers. One of the gas engine chillers also has an "electric-motor-driven parallel driveline, allowing operators to switch between gas and electric energy sources, depending on which is most economical at a given time." According to John Farrel, a partnet of AKF "We wanted the owners of the Time & Life Building to be in a good position to take advantage of lower natural-gas rates during peak electric-demand periods and reduce dependency on the electric grid." (Anonymous 2002)

A Hungarian office building complex using natural gas engine generators and boilers to provide electricity and hot water. The hot water is used to drive two 600 kW absorption chillers (Ehmo 2002).

A university administrative office is served by a 75 kW microturbine where heat from the exhaust gases is used by an absorption chiller and a solid desiccant system to provide cool dry air. The system was intrumented and monitored for a short time (Popovic 2002).

The Southern California Gas Pico Rivera Facility includes an engineering analysis center, operations training, meter repair shop and material storage. The new plant includes a double-effect gas absorption chiller heater, microturbine, heat recovery unit, and turbine inlet cooling. The benefits were seen as improving the utilization of energy by "keeping gas lines full in the summer when gas demand is lowest and relieving the electric lines when they experience their highest loads." In addition, improved source efficiency, reducing peak demand, lowering operating costs and reducing emissions were also reasons cited. The BCHP consultant was Ying Yu from Conservation Technology and the mechanical and electrical engineering was done by Mike Gilmore of Donn C. Glimore Associates.

In Sohn (1997) an overview of natural gas cooling at various DOD facilities are described including office buildings at the Barnes Building in Boston MA and Youngstown-Warren Air Reserve Station OH. These are demonstrations but are part of an overall objective to reduce energy use.

The Four Times Square building in New York is a 52 story office building with 1.6 million square feet. The architect for the building was Fox & Fowle of New York. The building uses six gas fired absorption chillers

115

each rated at 620 tons. According to Jonathan Durst, the building operator, the absorbers were selected "because of its high operating efficiency." And "Our strategy was to minimize the use of energy resources, as well as avoiding expense and environmental impact from electric power plant operation." (The Trane Company 2003)

Hospitals

A 100,000 square meter hospital and medical office building complex was constructed in Toledo, Ohio. The system uses a hot-oil transfer fluid to recover heat from a combined turbine exhaust and hot water and steam generators. The heat recovery is used in part to drive an indirect-fired single stage absorption chiller to provide chilled water to the facility. The author appears to be the mechanical design engineer on the project (Meckler 2002).

The Mississippi Baptist Medical Center is a 694 bed hospital and medical complex in Jackson Mississippi with a CHP system installed in 1991. The system was installed with the aim of reducing energy costs. The design includes a turbine generator, waste heat recovery boiler and two steam absorption chillers. One of the chillers is 1250 tons and the other is 750 tons. Both are double-effect chillers utilizing 115 psi steam. The high reliability of all system components is one of the many factors leading to its long term success. (Anonymous 2004)

In Sohn (1997) an overview of natural gas cooling at various DOD facilities are described including hospitals at Ft Riley KS, Ft Eustis VA, and Ft Hauchuca AZ. These are demonstrations but are part of an overall objective to reduce energy use.

The Resurrection Hospital in Chicago Illinois installed a 550 ton single effect absorption chiller made by Carrier for its 1,000,000 square foot facility. Gary Curtin, chief engineer, "was looking for something that would use the cogen system's waste heat and act as primary chiller in the moderate weather of spring and fall days." The plant also includes two 1500 ton centrifugal chillers but they don't need to be run on cooler days to meet the load and this avoids electric demand charges. (American Gas Cooling Center 1996).

Sherman Hospital in Elgin Illinois installed four indirect-fired single-effect absorption Carrier chillers totaling 1140 tons to serve the 485,000 square foot hospital. "Perhaps the largest factor in the decision to add absorption chillers was that the 419-bed hospitals newly installed cogeneration system allowed economical steam generation for the chillers through heat recovery equipment." The lack of CFCs was also cited as a reason. (American Gas Cooling Center 1996).

Manufacturing

Cardinal Health's Red Lion Road facility provides contract packaging services to the pharmaceutical industry. They installed two 300 ton York direct-fired double-effect absorption chiller/heaters. Later when the facility was expanded, two 630 ton York direct-fired absorption chillers were added as well as a Trane 780 ton electric chiller and a 780 ton direct-fired absorption chiller. The hybrid plant allowed the most cost effective chiller to operate depending on the utility rate in affect at the time. Special gas cooling rates made the decision economical. (http://www.energysolutionscenter.org/resources/PDFs/GT_SP04_CoolingProcessFacilities.pdf)

Ultra Tool and Plastics in Buffalo, New York added a 170 ton Chillco engine driven chiller to its 100,000 square feet plant. "A single, small footprint process chiller supplies cooling water as low as 37F to 30 injection molding machines and replaces individual portable chillers at each machine. The chiller improves part manufacturing by providing optimal water temperature and flow, cutting cycle time, and increasing employee work space." (American Gas Cooling Center 1996).

Nutrilite Produces of Buena Park, California installed a 400 ton McQuay direct-fired absorption chiller along with its 300 ton electric chiller to serve the 150,000 square foot facility that produces vitamins. The installation was primarily for energy cost savings. (American Gas Cooling Center 1996).

SVG Lithography Systems is a Wilton, Connecticut manufacturer with a 250,000 square foot building. Two 175 ton Tecochill gas engine-driven chillers were installed to supplement the existing plant "to help us conserve energy and save on our utility bills." The units also recover hot water to reduce boiler loads by reheating return water. Mark Wcislo is the facility operations engineer. (American Gas Cooling Center 1996).

Nishikawa Standard of Topeka, Indiana installed a 150 ton Tecochill engine-driven chiller for its automotive weather stripping production facility. It was installed to save energy costs since the process requires cooling the frictional heat generated when mixing rubber. "We turn different pieces of equipment off and on all day. That results in a fluctuating load. At the same time, we need to maintain a tight tolerance in our water temperature. The gas fired chiller provides modulated tracking for a constant temperature." Sheldon Begley is the facility manager at the plant. (American Gas Cooling Center 1996).

Somerset Pharmaceuticals of Tampa, Florida has a 24,000 square foot facility which they are cooling with two 75 ton Tecochill engine driven chillers. Waste heat is recoverd for hot water requirements of the facility. Energy cost savings and efficiency were the reasons for installing the system. (American Gas Cooling Center 1996).

Kendall-Jackson Winwood facility in Geyserville, California installed an FES engine-driven refrigeration system and recovered heat to produce hot water for cleaning. This avoided the purchasing of an additional boiler when the plant was being expanded. Three chillers, each of 150 tons, were installed. Energy costs, heat reclaim, and capacity control were the reasons cited for the installation. Mike Davidson, IRAPP, provided the engineering. (American Gas Cooling Center. GRI Commercial PAG Briefing)

Universities

Vassar College located 70 miles north of New York City converted its campus from using many distributed cooling systems to a centralized system. The campus occupies 1000 acres and has 39 buildings totaling 1.5 million square feet. Goldman Copeland Associates, P.C. was the engineering firm. The plant consists of one 1000 ton electric chiller and one 1000 ton gas fired absorption chiller to permit fuel switching based on

the price of electricity and gas.
(http://findarticles.com/p/articles/mi_m0BPR/is_6_22/ai_n14709500/pg_4)

Trent University in Peterborough, Ontario installed an engine-driven chiller (Tecochill CH-150) and monitored it for three years as part of a demonstration program. The chiller provided "space cooling for a commons and library complex with a combined floor space of 12,300 square meter". It was installed beside an existing electric chiller to make piping connections easy. The chiller "was connected to the existing primary/secondary configuration, although the chillers only operate one at a time." The gas chiller is about a third of the total cooling capacity of the plant. Waste heat was used for the building's domestic hot water system. "A priority control system in the chiller's controls provides the excess heat initially to the engine jacket water, secondly to the heat-recovery system, and finally to the heat rejection circuit. Another priority system in the domestic hot water controls lets the Tecochill chiller provide all of the domestic heat, if enough is available, but turns on a gas fired boiler to provide heat if the chiller cannot meet the heating demand or if it is shut down for the season." The reason for installation appears to be: "the absence of long-term hazardous waste and lake warming effects, two risks commonly associated with nuclear power." (CADDET 1998)

A combined cooling, heating and power plant is serving the east campus of the University of Illinois at Chicago. It will be linked to a similar plant already operating for the nearby west campus. The electricity from

117

the plant serves 3.8 million square feet and delivers heating and cooling through a loop. Several absorption chillers are used with a total capacity of 1350 tons. An additional 1000 tons of absorption chillers were installed later. The paper describing the plant is focused on the financial reasons for installing such a plant but other reasons are also cited including efficiency, reliability, and emissions (Midwest CHP Application Center 2001).

The University of California at San Francisco which includes a hospital uses two turbines to generate electricity and the waste heat from them drives an absorption chiller (Onsite Sycom Energy 2000).

The University of California at Los Angeles uses a pair of combustion turbine generators to produce much of its electricity. Exhaust gases are directed to heat recovery steam generators which produce 660 psig steam. These drive a turbine generator and two steam turbine driven centrifugal chillers. Four additional single stage absorption chillers utilize waste heat. The system serves 13.5 million square feet of campus (Onsite Sycom Energy 2000).

The Miramar Campus, part of San Diego City College District, is using a 300 ton Alturdyne gas engine driven recriprocating chiller to provide cooling to two buildings. A second 100 ton electric chiller is only needed during the extremely hot weather. They wanted to reduce their summer peak demand and "avoid adding more pollutants to the environment." (American Gas Cooling Center 1996)

Louisiana State University installed a gas turbine directly driving an open drive chiller. The turbine drove the 4200 ton chiller and produced large quantities of steam through a waste heat boiler with supplemental burner. CES/Way and Texas Energy Engineers/ccrd Partners designed the system. The system distributed chilled and hot water througout the campus. It was opporated under an energy service contract with CES/Way. (Association of Energy Engineers 1997)

Schools

Hinsdale High School District 86 has two high schools that have both installed engine-driven chillers. The Central and South schools originally were not cooled and cooling was desired to implement summer programs at the school. The current electrical system would need a significant upgrade in order to install electric chillers. This upgrade would cause the school to not have electrical service for a time. Due to this and the economics, engine-driven chillers were chosen instead. In addition, one of

the high schools had a coal storage bin which was used to house the engine chiller avoiding further construction costs. (http://www.berg- eng.com/hinsdale.htm)

Two high schools in the Brownville Texas School District installed 100 ton natural gas engine-driven air cooled chillers. Each school already had three 100 ton electric chillers but wanted a chiller to follow the load below 100 tons better which was possible with the load following characteristics of the Alturdyne engine chillers. (American Gas Cooling Center 1996)

The Illinois Mathematics and Science Academy in Aurora Illinois is a 330,000 square foot school using 680 tons of indirect-fired single-effect absorption chillers. The steam is supplied by existing natural gas boilers and energy savings was the primary goal. (American Gas Cooling Center 1996)

Peabody High School in the Pittsburgh Public School system installed 150 tons cooling by using two gas engine driven screw chillers to cool the 285,000 square foot building. By reducing demand, significant energy cost savings was realized. Heat from the chiller is used to "heat the schools swimming pool and to heat perimeter classrooms during times when heating and cooling are needed simultaneously." (American Gas Cooling Center 1996)

In El Paso, Texas is Ysleta High School with 244,000 square feet which uses 485 tons of engine-driven Tecochill chillers. Bath Engineering Corp conducted the study that recommended the chillers. Simplifying the existing plant and energy cost savings were both realized by using the chillers. (American Gas Cooling Center 1996)

Northbrook Junior High School in Northbrook, Illinois installed 200 tons of direct-fired absorption chiller/heater made by York. No additional space was needed since it was installed where a boiler had been. In addition, energy cost savings was used to justify the purchase. Tim Metling is the director of buildings and grounds at the school. (American Gas Cooling Center 1996)

Residential

Williamsburg Apartments of Decatur, Georgia installed a 200 ton Alturdyne engine-driven chiller for its 416 unit apartment complex. The primary reason for installation appears to be energy cost savings. (American Gas Cooling Center 1996).

Peachtree Tower in Atlanta, Georgia is a 418,000 square foot high rise condominium complex with 335 units and uses three 150 ton engine-driven chillers. Heat recovery from the engine provides domestic hot water. Energy cost savings appears to be the motivation for installing the engine chillers. (Mahone 1998)

Boston YMCA has 140 living quarters in the 106,000 square foot building. A 150 ton chiller has waste heat recovery used to provide heat to the swimming pool and laundry. Energy savings were cited. (Mahone 1998)

St. Tropez Condominium in New York City is a 35 story, 327 unit building served by two York 400 ton direct- fired absorption chillers. "Since these chillers can also supply heat, an existing boiler was removed which meant no additional mechanical space was required." Reduced operating and maintenance costs as well as increased reliability compared to older chillers was cited as the reasons for the change. Dan Leff, Phil Herman P.E., Steve Axel and Paul Matejov all from FMES Technologies, Inc were credited as key project participants. (Sweetser 1996)

Villas Appartments in Tempe Arizona already had gas cooling when it decided to replace those units with a new 55 ton engine driven chiller from Cummins Southwest. The unit included a Cummins G5.9 engine, a industrial compressor from Royce, and a control system for the engine and refrigeration from Total Control, Inc. The apartment building contains 46 units each of about 1000 square feet. Reduced energy cost and

temperature complaints from the residents were the reason for the installation. (American Gas Cooling Center 1996).

Warehouse/Distribution

Rotelle's West Point, Pennsylvania distribution center is 498,000 square feet and uses 1700 tons of gas engine- driven refrigeration. The system was installed to reduce energy costs and to replace the CFC chillers. In addition, the new chillers have added capacity to the plant without affecting the scheduled use of the facility. (American Gas Cooling Center 1996).

Nestle of New Lehigh Valley, Pennsylvania is a 400,000 square foot warehouse and distribution center using two 400 ton York double-effect absorption chillers. The facilities engineering manager is Gary Ramthun. Champion Partners designed the facility. Nestle selected the chillers "for three main reasons: environmental benefits, low operating cost and reliability." (American Gas Cooling Center 1996).

Allegheny Cold Storage in Pittsburgh Pennsylvania provides near constant below zero cold storage for food. A 65-ton FES gas engine-driven refrigeration unit is used with an ammonia refrigerant. Energy cost savings was the primary goal by reducing the electrical demand. (Sweetser 1996)

119

The Kemp McLeod peach farm in McBee, South Carolina has over 500 acres of orchards. To ensure freshness and taste, the peaches are refrigerated soon after being harvested. Two natural gas driven John Deer engines provide most of the energy required to cool the fruit. Economics compared to electric chillers was the main reason for the use of engine chillers. (American Gas Cooling Center 1996)

Dominick V. Daniels Processing and Distribution Center in Kearny, New Jersey installed three 700 ton McQuay absorption chillers. The mail distribution facility has 1 million square feet and handles 1.3 billion pieces of mail per year. Richard Wagner, chief mechanical engineer with Kruse Associates did the design. The plant engineer stated that the new chillers have "increased employee satisfaction with their environment and made my job a lot more pleasant." (American Gas Cooling Center 1996)

Nursing Homes

The Queen of Peace Residence in Queens Village, New York needed to replace their CFC based chillers and chose to use Techochill gas engine-driven screw chillers providing 350 tons of cooling to the 150,000 square foot residential care facility. In addition, annual energy cost savings was expected from the new chillers. (American Gas Cooling Center 1996).

The 225 bed Corinthian Nursing Home in Westlake, Ohio, installed a Tecochill 150 ton engine driven chiller. It saves energy costs and "waste heat from the engine is recovered to produce hot water." (American Gas Cooling Center 1996).

The Oxford Manor – Steward Home is a nursing home in Oxford Pennsylvania that installed a 150 ton double- effect direct-fired absorption chiller primarily to save on annual energy costs. The chiller also produces hot water for space heating. (American Gas Cooling Center 1996)

Integrated Health Services at Green Briar, located in Miami, Florida is a 75,000 square foot nursing home which uses 160 tons of Tecogen natural gas engine chillers. Heat recovery from the engine supplies most of the hot water needed for the laundry, kitchen and domestic purposes. Richard Furman was the engineering consultant on the initial installation. (American Gas Cooling Center 1996)

Philadelphia Presbytery Homes and Services for the Aging Broomall Presbyterian Home is a 68,000 square foot facility using 125 tons of Tecogen gas engine-driven chillers. Energy savings from operating the gas engine instead of electric chillers was

the primary reason for the installation. Waste heat from the engine is used for providing hot water to the bathrooms, kitchens, and administrative offices during the summer. Tom Moody was the installation's engineer. (American Gas Cooling Center 1996)

Government

DuPage County Government Complex in Wheaton, Illinois is a 12 building campus of 1.5 million square feet including administrative building, jail, sheriff's office, judicial office building, health department, convalescent center, and juvenile detention center. A hybrid chiller plant solution of two electric centrifugal chillers and one Trane absorption chiller with 1150 ton capacity was installed. In addition, a chilled water storage system is used to shift the time of chiller operation. (www.retscreen.net/download.php/ang/512/3/CHP24-C.pdf)

A 30,869 square foot municipal complex in Warner Robins, Georgia replaced existing chillers with two gas engine-driven 100 ton Alturdyne chillers. Excellent load following and the fact that it was replacing absorption chillers were cited as reasons (American Gas Cooling Center 1996)

A city hall in Mesquite, Texas uses four Yazaki absorption chiller/heaters with 200 tons of total cooling. Desiring the best economics and efficiency, they chose this system. In addition, the few moving parts for an absorption chiller has meant reduced maintenance. (American Gas Cooling Center 1996).

120

The Oakland County Courthouse in Pontiac Michigan uses two 1000 ton steam fired double-effect absorption chiller heaters from Carrier. The building was already served by the district steam system. Vern Kors of Kors Engineering was the engineering consultant on the project. (American Gas Cooling Center 1996).

Three 700 ton McQuay absorption chillers serve a Kearny, New Jersey mail distribution center. The facilty was adding automated mail handling equipment at the same time and did not want to increase the total electric demand. In addition the gas price was low and the electric price was high at the time of installation. Richard Wagner from Kruse Associates was the design engineer. (American Gas Cooling Center 1996).

A 55,000 square foot city hall annex in Dearborn, Michigan installed a Tecochill 150 ton gas engine driven screw chiller. Economics was the reason cited for installing the chiller. Dick Elliott was the energy coordinator for the city of Dearborn. (American Gas Cooling Center 1996).

Aurora Municipal Justic Center in Aurora, Colorado, is a 276,000 square foot courthouse and police building and uses a 500 ton York double-effect direct-fired absorption chiller/heater. It provides cooling and domestic hot water heating as well as the last stage of space heating. Energy cost savings were cited as the reason for installation. (Sweetser 1996)

Hotel/Motel

Hotel Via, a four story South Miami, Florida hotel, installed 150 ton Tecochill gas-engine water chillers. The option was chosen because it is more energy efficient than individual room conditioning units and heat recovered can be used for the kitchen, laundry, swimming pool, and other domestic uses. Guillermo Terrones was the chief engineer on the project. (American Gas Cooling Center 1996).

The Guest Quarters Suite Hotel in Chicago installed 535 tons of two-stage direct-fired absorption chillers made by York in this 330,281 square foot building. The chilled water plant also includes a 500 ton electric chiller. They operate the gas chiller during times when electricity is more expensive. In addition, the chiller uses no CFCs or HCFCs. Also, the system was chosen "for the unit's ability to operate very efficiently under partial load conditions" and "our unit is highly efficient when operating at low capacity." James Whitby is the director of building services. (American Gas Cooling Center 1996).

The Marriot in Philadelphia, Pennsylvania has 22 stories, 1 million square feet, and takes up a city block. Mark Shulman of Giovanetti-Shulman Associates of Drexel Hill, Pennsylvania was involved in the design. Economics and energy efficiency were essential for the Marriot. The chiller installed was a 1000 ton double- effect direct-fired absorption chiller. An additional centrifugal chiller is also located in the plant and is used on hot summer days. (American Gas Cooling Center 1996)

City Cigar Motel and Restaurant in Tampa, Florida has 36,000 square feet and has 80 tons of natural gas engine-driven chiller cooling capacity. Mike Charles of CGM Services recommended the Alturdyne chiller. Heat from the chiller is used for all hot water needed in the building. Cost of electricity was prohibitive so the unit was installed to avoid demand charges. (American Gas Cooling Center 1996)

Museum

The Toledo Museum of Art, 150,000 square feet, located in Toledo, Ohio is using a two stage absorption 240 ton chiller made by York. The decision to buy the chiller was based on economics to reduce demand charges. The operating costs were reduced by 25% by installing the chiller. Physical plant manager Paul Bernard chose to use this type of chiller. (American Gas Cooling Center 1996)

The New Jersey State Aquarium has 120,000 square feet of floor area and is located in Camden, New Jersey. It installed a 330 ton Tecochill gas engine driven chiller. The chiller is used to maintain space conditions as well

121

as exhibit temperatures. It was installed primarily to reduce operating costs. (American Gas Cooling Center 1996)

The Philadelphia Zoo Aviary is a 672 square foot exhibit using 15 tons of refrigeration. They installed Servel absorption chillers which save on annual operating costs. Quiet operation, single phase electricity, and lack of cooling towers helped in the selection. (American Gas Cooling Center 1996)

The Jungle World in the Bronx Zoo has 36,000 square feet of exhibit area. It is cooled with 400 tons of direct- fired absorption chiller by York. The high cost of electricity in New York was a major factor in the decision. David Cole is the director of operations in the zoo. Fewer moving parts meant that is was simpler to maintain compared to electric chillers. (American Gas Cooling Center 1996)

The Science Place in Dallas, Texas is a science center with a theatre addition. It uses 330 ton Yazaki gas absorption chillers to cool the 15,000 square foot center. "We chose gas cooling for its reliability, monthly costs, lower maintenance, cost efficiency, and responsiveness and because we think it will benefit the city in terms of savings. We are able to justify our decision based the energy and money saved in operating." The plant includes one 30 ton and three 100 ton absorption chillers. (American Gas Cooling Center 1996)

Religious

Carpenter's Home Church in Lakeland, Florida is a 167,000 square foot building that has used two 150 ton Tecochill chillers since 1987. Energy cost savings appears to be the main reason for the installation. (Mahone 1998 and http://www.bellgossett.com/Stories/IS-Church-Cut.asp)

Franciscan Sisters of Mary's St. Louis Mother House uses a York direct-fired absorption chiller with 200 tons of capacity to cool the 128,890 square feet including a chapel, office and home. Gene Koenig, manager of congregational property services said that their goals were to "stay ahead of air quality standards and improve operating efficiencies." The lack of CFC refrigerants and reduction in peak demand charges were among the reasons to install the absorption chiller. (American Gas Cooling Center 1996)

St. Patrick's in Brooklyn, New York is a church served by two Yazaki 50 ton direct-fired absorption chiller/heaters. Utility cost was the main reason for the installation. The installation was restricted because of trying to work within an existing structure and the quiet operation of the chiller was important. (American Gas Cooling Center 1996)

St. Patrick/St. Anthony in Hartford, Connecticut is a 6,500 square foot church served by four direct single effect chillers made by Servel with 20 total refrigeration tons. The church was built in 1876. "They approached the task with six points to consider 1) installation cost, 2) design and layout, 3) operating costs, 4) source of energy,

5) value for the money, 6) noise of the equipment." In addition no rewiring or reconstruction was needed in the Church to make the chiller work. (American Gas Cooling Center 1996)

Transportation Terminal

The USAir terminal at LaGuardia in Queens New York has 305,000 square feet and uses three two-stage direct- fired chiller/heaters providing 1500 tons of cooling. The "management was looking for the most efficient, economical and environmentally friendly method" for conditioning the building. In addition "maintenance is simplified and space is saved by using one system to perform both heating and cooling function." Thomas Jaske is USAir's regional director of facilities. (American Gas Cooling Center 1996)

Denver Airport uses 12,450 tons of York gas fired engine chillers to cool 6.5 million square feet. Three Waukesha 2585 hp, turbocharged, lean burn, natural gas engines which drive three 4150 ton York Turbomaster centrifugal chillers comprise the cooling plant. By using the gas chillers, they avoided the

122

construction of an additional 25,000 volt electric feeder. They also will realize significant energy cost reduction. No CFCs were used in the chillers. (American Gas Cooling Center 1996)

Capital City Terminal in Harrisburg, Pennsylvania uses a 70 ton engine driven chiller made by Cummins Southwest. Charles Johnson Jr., chief mechanical engineer of Integrated Building Arts, a Benatec company, selected the chiller in order to reduce annual operating costs. Heat recovery was planned to be used for hot water for a fitness center. (American Gas Cooling Center 1996)

Norfolk International Airport in Virginia is a 295,642 square foot facility that uses a 550 ton McQuay-Sanyo double-effect direct-fired absorption chiller to provide cooling. The hybrid plant also includes an electric chiller. The gas chiller was chosen because it was environmentally friendly, lack of CFCs, and reduced operating expense. (American Gas Cooling Center 1996)

Arena

The Comcast Center at the University of Maryland is a 470,000 square foot basketball arena and includes 2,100 tons of cooling using both an electric centrifugal chiller and a steam turbine centrifugal chiller. The hybrid plant saves annual energy cost over a conventional plant. It utilizes extra steam available from the university cogeneration plant that was not being used during warm weather (Spanswick 2003).

The 192,000 square foot building at the Aqueduct Racetrack chose to use two 175 ton gas engine-driven screw chillers by Tecochill. This avoided high demand charges and the new system avoided costly maintenance on the old system. Heat is recovered for use in the building's hot water system. (American Gas Cooling Center 1996)

National Hockey League ice arena in Columbus, Ohio contains "an 800 ton engine-driven chiller and two 1,000 ton electric units are being installed to provide air conditioning." (Nowakowski 1999)

The Meadowlands Sports Complex in East Rutherford, New Jersey includes the Giants Stadiums and the Continental Airlines Arena. The complex is served by 3,450 tons of gas engine driven chillers made by Tecochill. The plant consists of six chillers: a 500 ton chiller cools the luxury boxes and administrative offices at Giants stadium, another 500 ton chiller cools the Continental Airlines Arena, a 350 ton chiller freezes the ice surface in the arena, and three 700 ton chillers cool the racetrack grandstand. The plant saves $2

million in operating costs per year. A heat recovery system enhances the system. (American Gas Cooling Center 1996)

Jay Lively Activity Center in Flagstaff, Arizona uses 375 tons of engine driven chillers for a skating rink and for ice making. Operating cost was cited as the main reason to use the engine chillers. (American Gas Cooling Center 1996)

Convention Center

Philadelphia Convention Center contains 1.3 million square feet of area and uses two 1,500 ton and two 1,000 ton direct-fired absorption chillers for the entire cooling and heating load on the building. "The units provide all of the heating and cooling, so no boilers were required, which reduced space requirements by 40%. They were also selected because of quiet operation." (Mahone 1998)

Retail

A JC Penny store in Austin Texas has over 213,142 square feet and uses 300 tons of gas engine driven chillers. Two 150 ton Alturdyne chillers were chosen. By significantly reducing peak demand, the store reduced its electric bill and repaid the investment in a few years due to some rebates. (American Gas Cooling Center 1996)

123

The Colosseum Mall in Jamaica, New York uses 400 tons of gas fired absorption chiller/heaters for 120,000 square feet of indoor flea market and mall. Instead of a cooling tower a deep well under the property provided low temperature cooling water. Energy cost savings coupled with rebates were the reason the system was chosen. (American Gas Cooling Center 1996)

Merritt Square Mall in Merritt Island, Florida has 100 retailers and 800,000 square feet. Originally the building owners installed an independent power system due to its location in an under developed area. Heat recovery from the generators drives absorption chillers. Each Trane absorption chillers is 550 tons. Warrren Meissner is the chief engineer for the building. (Anonymous 2002).

Bank

Owensboro National Bank in Owensboro, Kentucky is a 58,000 square foot bank and uses 180 tons of absorption chillers. The plant consists of 26 Robur absorption chillers. They installed the chillers to reduce their annual utility bill. "Cost of additional power [to the facility] would be a minimum of $150,000." Ted Lolley's Park Romel, a project engineer selected the plant configuration. The chiller is expected to save on utility bills but also freed up an entire floor of the building that had housed the mechanical room. (American Gas Cooling Center 1996)

Casino

Near Minnesota's Twin Cities, Grand Casino Hinckley contains 80,000 square feet of floor area and uses a 550- ton York engine-driven centrifugal chiller. The casino includes gaming, arcade, hotel, and restaurants. Frequent summer power outages prompted the casino to invest in an engine chiller since generators could not support two electric chillers. The plant includes electric chillers that are run during shoulder months to optimize reductions in energy costs. Reducing the operating cost is another benefit realized from the plant. LKPB engineers were the plant designers. (American Gas Cooling Center 1996)

Military

In Sohn (1997) an overview of natural gas cooling at various DOD facilities are described including various military buildings at Ft Dix NJ, Ft Polk LA, Ft Jackson SC, Ft Campbell KY, Robins AFB GA, Davis Monthan AFB AZ, and Utah ANG UT. These are demonstrations but are part of an overall objective to reduce energy use.

Fort Campbell, Kentucky needed to expand their cooling plant but the electrical service for the facility was at its limit. An anticipated $50,000 to upgrade the electrical system prompted them to consider options to electric cooling. The installed nine gas engine-driven TECOCHILL chillers totaling 2,400 tons. The chillers serve offices and barracks. (American Gas Cooling Center 1996)

Restaurant

In Sohn (1997) an overview of natural gas cooling at various DOD facilities are described including dining halls at Ft Bliss. These are demonstrations but are part of an overall objective to reduce energy use.

New England Culinary Institute in Montpelier, Vermont has 14,000 square feet of restaurant, kitchen and walk-in coolers. Two 50 ton air cooled engine-driven chillers were installed. "The system saves major operating expenses for the institute." John Pifer, a gas sales engineer for Vermont Gas said "the design/build mechanical contractor had difficulty laying out the ductwork for a conventional electric system." The roof mounted gas chillers were able to be located on the roof above the air handlers. Heat recovery is used to provide hot water for the building and some space heating. (American Gas Cooling Center 1996)

Supermarket

The Western Beef Company is a 70,000 square foot warehouse supermarket located in Queens, New York. It installed a Hill PHOENIX natural gas engine-driven refrigeration system with 180 tons of capacity. Estimates show that the supermarket will save $160,000 per year in energy savings. Operating cost savings seems to be the primary reason for the installation. (American Gas Cooling Center 1996)

Theatre

New England Conservatory of Music's Jordan Hall located in Boston, Massachusetts installed 120 tons of direct-fired double-effect absorption chillers. The 6,000 square foot building is a National Historic Landmark. The use of the Hall during summer required air conditioning but a major concern was that the noise of a conventional air conditioning system would diminish the good acoustics of the auditorium. Four 30-ton Yazaki direct-fired absorption chiller heaters were located atop Brown Hall, an adjacent building. R. G. Vaderweil Engineering of Boston designed the system to cut noise and vibration. (American Gas Cooling Center 1996)

Daycare Center

In Sohn (1997) an overview of natural gas cooling at various DOD facilities are described including a day care center at Ft Hamilton NY. These are demonstrations but are part of an overall objective to reduce energy use.

Multiple Applications

A 165,000 square meter complex in Hungary includes a shopping center, hotel, high-rise condominiums, and parking garage. A 922 kW natural gas engine driven generator provides heat to a 700 kW absorption chiller in a cooling plant that also contains three electric centrifugal chillers. Equipment was sized to baseload the absorption chiller. "Owners and investors were interested to use more power from their own energy supply companies." (Ehmo 2002)

APPENDIX H:
Organization Web Site Search for Efficiency Programs

California Utility

Los Angeles Department of Water and Power	http://www.ladwp.com/
NV Energy (Sierra Pacific)	http://www.nvenergy.com/
PG&E	http://pge.com/
Sacramento Municipal Utility District	http://www.smud.org/
Sempra (San Diego Gas and Electric)	http://www.sdge.com/
Southern California Edison	http://www.sce.com/
Southern California Gas	http://www.socalgas.com/
Southwest Gas	http://www.swgas.com/

California Programs

Best Practices Benchmarking for Energy Efficiency Programs	http://www.eebestpractices.com/
California Climate Change Portal	http://www.climatechange.ca.gov/
California Climate Registry	http://www.climateregistry.org/
California Commissioning Collaborative	http://www.cacx.org/
California Distributed Energy Resources Guide	http://www.energy.ca.gov/distgen/
California Energy Commission	http://energy.ca.gov/
California Energy Efficiency	http://www.californiaenergyefficiency.com/
California Green Building Initiative	http://www.energy.ca.gov/greenbuilding/index.html
California Measurement Advisory Council	http://www.calmac.org/
California Public Utilities Commission	http://www.cpuc.ca.gov/puc/

CoolTools™ Chilled Water Plant Design and Specification Guide	http://www.taylor-engineering.com/publications/design_guides.shtml
Database for Energy Efficient Resources	http://www.deeresources.com/
Energy Design Resources	http://www.energydesignresources.com/
Flex Your Power	http://www.fypower.com/
Green California	http://www.green.ca.gov/default.htm

Pacific Region Combined Heat and Power Application Center	http://www.chpcenterpr.org
Savings by Design	http://www.savingsbydesign.com/

Air-Conditioning, Heating and Refrigeration Institute	http://www.ahrinet.org/
Alliance to Save Energy	http://ase.org/
American Council for an Energy-Efficient Economy	http://aceee.org/
American Gas Association	http://aga.org/
American Society of Heating, Refrigeration, and Air-Conditioning Engineers	http://www.ashrae.org/
Association of Energy Engineers	http://www.aeecenter.org/
Building Operator Certification	http://www.theboc.info/
Building Owners and Managers Association International	http://www.boma.org/
The Collaborative for High Performance Schools	http://www.chps.net/
Combined Heat and Power Association	http://www.chpa.co.uk/
Commercial Buildings Initiative	http://www.zeroenergycbi.org/
Energy Efficient Building Association	http://www.eeba.org/
Energy Solutions Center	http://www.energysolutionscenter.org/
ENERGY STAR	http://www.energystar.gov/
Functional Testing and Design Guides	http://www.peci.org/ftguide/
Gas-Fired Air Conditioning Equipment	http://www.gasairconditioning.org/
Gas Technology Institute	http://www.gastechnology.org/
National Institute of Building Sciences	http://www.nibs.org/
National Renewable Energy Laboratory – Cooling, Heating, and Power	http://www.nrel.gov/learning/eds_chp.html
Natural Resources Defense Council	http://www.nrdc.org/
New Buildings Institute	http://www.newbuildings.org/
Oak Ridge National Laboratory – Cooling, Heating and Power Technologies Program	http://www.ornl.gov/sci/engineering_science_technology/cooling_heating_power/

127

Propane Council	http://www.propanecouncil.org/
Sustainable Building Industry Council	http://www.sbicouncil.org/
Sustainable Communities Network	http://www.sustainable.org/
U.S. Clean Heat & Power Association	http://www.uschpa.org
U.S. Department of Energy Distributed Energy	http://www.eere.energy.gov/de/
U.S. Environmental Protection Agency Combined Heat and Power Partnership	http://www.epa.gov/chp/
U.S. Green Building Council	http://www.usgbc.org/
Whole Building Design Guide	http://www.wbdg.org/

Manufacturers

http://www.alturdyne.com/ http://www.centioncorp.com/
http://www.commercial.carrier.com/
http://www.energy-concepts.com/http://www.mcquay.com/

http://www.robur.com/

http://www.tecogen.com/

http://www.trane.com/

http://www.yazakienergy.com/

http://www.york.com/