Energy Research and Development Division
FINAL PROJECT REPORT

CHALLENGES TO THE INTEGRATION OF RENEWABLE RESOURCES AT HIGH SYSTEM PENETRATION

Prepared for: California Energy Commission
Prepared by: California Institute for Energy and Environment

MAY 2014
CEC-500-2014-042

PREPARED BY:

Primary Author(s):
Alexandra von Meier

California Institute for Energy and Environment
University of California
2087 Addison St.
Berkeley, CA 94704
http://uc-ciee.org/

Contract Number: 500-99-013

Prepared for:

California Energy Commission

Steve Ghadiri
Contract Manager

Fernando Pina
Office Manager
Energy Systems Research Office

Laurie ten Hope
Deputy Director
ENERGY RESEARCH AND DEVELOPMENT DIVISION

Robert P. Oglesby
Executive Director

DISCLAIMER

This report was prepared as the result of work sponsored by the California Energy Commission. It does not necessarily represent the views of the Energy Commission, its employees or the State of California. The Energy Commission, the State of California, its employees, contractors and subcontractors make no warranty, express or implied, and assume no legal liability for the information in this report; nor does any party represent that the uses of this information will not infringe upon privately owned rights. This report has not been approved or disapproved by the California Energy Commission nor has the California Energy Commission passed upon the accuracy or adequacy of the information in this report.

ACKNOWLEDGEMENTS

The author thanks the California Energy Commission for providing the funding for this project. The author would like to thank her colleagues for their guidance, insights and feedback on this project: Gary Baldwin, Obadiah Bartholomy, Carl Blumstein, Karl Brown, Merwin Brown, Lloyd Cibulka, Harlan Coomes, Joe Eto, Harold Galicer, David Hawkins, Ron Hofmann, Chris Marnay, Alex McEachern, Larry Miller, Dan Pearson, Therese Peffer, Mark Rawson, Dan Shugar, Jim Williams and Gaymond Yee. The responsibility for any errors or omissions is mine alone.

PREFACE

The California Energy Commission Energy Research and Development Division supports public interest energy research and development that will help improve the quality of life in California by bringing environmentally safe, affordable, and reliable energy services and products to the marketplace.

The Energy Research and Development Division conducts public interest research, development, and demonstration (RD&D) projects to benefit California.

The Energy Research and Development Division strives to conduct the most promising public interest energy research by partnering with RD&D entities, including individuals, businesses, utilities, and public or private research institutions.

Energy Research and Development Division funding efforts are focused on the following RD&D program areas:

- Buildings End-Use Energy Efficiency
- Energy Innovations Small Grants
- Energy-Related Environmental Research
- Energy Systems Integration
- Environmentally Preferred Advanced Generation
- Industrial/Agricultural/Water End-Use Energy Efficiency
- Renewable Energy Technologies
- Transportation

Challenges to the Integration of Renewable Resources at High System Penetration is the final report for the Modeling the Development of Load Control Strategies and the Integration of Electric Generators Driven by Renewable Resources project (contract number 500-99-013) conducted by California Institute for Energy and Environment. The information from this project contributes to Energy Research and Development Division's Energy Systems Integration Program.

For more information about the Energy Research and Development Division, please visit the Energy Commission's website at www.energy.ca.gov/research/ or contact the Energy Commission at 916-327-1551.

ABSTRACT

Successfully integrating renewable resources into the electric grid at penetration levels to meet a 33 percent Renewables Portfolio Standard for California presents diverse technical and organizational challenges. This report characterizes these challenges by coordinating problems in time and space, balancing electric power on a range of scales from microseconds to decades and from individual homes to hundreds of miles. Crucial research needs were identified related to grid operation, standards and procedures, system design and analysis, and incentives, and public engagement in each scale of analysis.

Performing this coordination on more refined scales of time and space independent of any particular technology, is defined as a "smart grid." "Smart" coordination of the grid should mitigate technical difficulties associated with intermittent and distributed generation, support grid stability and reliability, and maximize benefits to California ratepayers by using the most economic technologies, design and operating approaches.

Keywords: renewable resources, wind, solar, intermittence, storage, demand response, stability, oscillations, operations, transmission, distribution, microgrids, voltage regulation, protection

Please use the following citation for this report:

Meier, Alexandra von. (California Institute for Energy and Environment). 2010. ***Challenges to the Integration of Renewable Resources at High System Penetration.*** California Energy Commission. Publication number: CEC-500-2014-042.

TABLE OF CONTENTS

Acknowledgements ..... **i**

PREFACE ..... **ii**

ABSTRACT ..... **iii**

TABLE OF CONTENTS ..... **iv**

LIST OF FIGURES ..... **v**

EXECUTIVE SUMMARY **1**

Introduction 1

Project Purpose 2

Project Results 2

Project Benefits 3

CHAPTER 1: Introduction to the Coordination Problem **4**

CHAPTER 2: Temporal Coordination **7**

2.1 Balancing generation and load 7

2.1.1 Background: Intermittence 7

2.1.2 Research Needs Related to Intermittence 8

2.1.3 Background: Firming Resources 9

2.1.4 Research Needs Related to Firming Resources 11

2.1.5 Background: Demand Response 13

2.1.6 Research Needs Related to Demand Response 13

2.2 Dynamic Behavior and Grid Stability 15

2.2.1 Background: Dynamic Behavior 15

2.2.2 Research Needs Related to Dynamic Behavior 19

CHAPTER 3: Spatial Coordination **21**

3.1 Transmission Level: Long-distance Issues 21

3.1.1 Background: Transmission Issues 21

3.1.2 Research Needs Related to Transmission 22

3.2 Distribution Level: Local Issues 23

3.2.1 Background: Overview of Distributed Generation and Technical Issues 23
3.2.2 Background: Voltage Regulation 25
3.2.3 Research Needs Related to Voltage Regulation 28
3.2.4 Background: Circuit Protection 30
3.2.5 Research Needs Related to Circuit Protection 32
3.2.6 Background: Islanding 34
3.2.7 Research Needs Related to Islanding 35
3.2.8 Microgrids 36
CHAPTER 4: Overarching Coordination Issues 39
CHAPTER 5: Conclusion 44
REFERENCES 45

LIST OF FIGURES

Figure 1: Time Scales for Power System Planning and Operation 5
Figure 2: Distance Scales for Power System Planning and Operation 5
Figure 3: Load Duration Curve Filled with Renewables 8
Figure 4: Resource Modeling and Forecasting Time Scales 9
Figure 5: Energy Storage Time Scales 11
Figure 6: Demand Response Time Scales 14
Figure 7: Small A.C. Power Flow Model 16
Figure 8: Power Flow Oscillations 18
Figure 9: Generator Stability 19
Figure 10: Transmission and Distribution System Diagram 24
Figure 11: Voltage Drop 26
Figure 12: Voltage Adjustment 27
Figure 13: Voltage Drop with DG 29
Figure 14: Radial Distribution System Layout 31
Figure 15: Protection Zones 31
Figure 16: Power Island 34
Figure 17: Microgrid 37
Figure 18: Logic Flow 39

EXECUTIVE SUMMARY

Introduction

Successfully integrating renewable resources into the electric grid at penetration levels necessary to meet a 33 percent Renewables Portfolio Standard for California involves diverse technical and organizational challenges and major coordination.

Renewable and distributed resources introduce space (spatial) and time (temporal) constraints on resource availability and are not always available where or when they are wanted. Although every energy resource has limitations, the constraints associated with renewables may be more stringent and different from those constraints that baseload power systems were designed and built around.

These unique constraints must be addressed to mitigate problems and overcome difficulties while maximizing the benefits of renewable resources. New efforts are required to coordinate time and space within the electric grid at greater resolution or with a higher degree of refinement than in the past.

This requires measuring and actively controlling diverse components of the power system on smaller time scales while working toward long-term goals. These smaller time scales may be hourly or by the minute, but could also be in the milli- or even microsecond range. It also important to plan and design around the diverse details of local distribution circuits while considering systemic interactions throughout the Western interconnect. Simultaneously coordinating or balancing these resources in an electric under a variety of time and distances, without any specific technology to assist, is defined as a "smart grid."

Temporal coordination specifically addresses the renewable resources time-varying behavior and how this intermittency interacts with other components on the grid where not only quantities of power but rates of change and response times are crucially important.

Research needs for temporal coordination relate to: resource intermittence, forecasting and modeling on finer time scales; electric storage and implementation on different time scales; demand response and its implementation as a firm resource; and dynamic behavior of the alternating current grid, including stability and low-frequency oscillations, and the related behavior of switch-controlled generation. Different technologies, management strategies and incentive mechanisms are necessary to address coordination on different time scales.

Spatial coordination refers to how resources are interconnected and connected to loads through the transmission and distribution system. This means connecting remote resources and also addressing the location-specific effects of a given resource being connected in a particular place. The latter is particularly relevant for distributed generation, which includes numerous smaller units interconnected at the distribution rather than the transmission level.

Research needs for spatial coordination relate to: technical, social and economic challenges for long-distance transmission expansion; problematic aspects of high-penetration distributed generation on distribution circuits, including clustering, capacity limitations, modeling of

generation and load, voltage regulation, circuit protection, and prevention of unintentional islanding; and microgrids and potential strategic development of microgrid concepts, including intentional islanding and variable power quality and reliability.

A challenge to "smart grid" coordination is managing unprecedented amounts of data associated with an unprecedented number of decisions and control actions at various levels throughout the grid.

Project Purpose

This project explored and discussed some of the crucial technical challenges for refining temporal and spatial energy and information management. Researchers identified areas that are poorly or insufficiently understood especially where new or continuing research is necessary.

Project Results

Five levels of logic flow were presented in this report: critical points, information aggregation, action items, locus of control, and failure correction. These provided a reference basis or checklist for research on any particular aspect of system coordination. The report also categorized research needs by "action areas," or areas of activity where new knowledge would be applied or implemented. The action areas were:

- System operation.
- Standards, rules and procedures.
- System design and analysis.
- Incentives and public engagement.

These action areas are interrelated and attention to every area will be required for ultimate progress toward renewable resource integration goals.

Strategically, "smart" coordination functions should serve to:

- Mitigate technical difficulties associated with renewable resources, thereby enabling California to meet its policy goals for a Renewables Portfolio Standard.
- Maximize the beneficial functions that renewable generation can perform toward supporting grid stability and reliability.
- Maximize benefits to California ratepayers by enabling use of the most economic technologies, design and operating approaches.

This report outlined substantial challenges on the way to meeting these goals. The research suggested that although the problems associated with integrating renewable resources at high penetration levels were considerable in number and significance, they ought to be tractable in principle. It seemed plausible that the technical difficulties around employing large amounts of intermittent and distributed generation could be overcome and that the investment in doing so coincided with the strategic development of a "smart grid" that was desirable or even necessary for reasons other than reducing carbon emissions, specifically economy and reliable electric service.

More work is required to move from the status quo to a system with 33 percent of intermittent renewables. The complex nature of the grid and the refining temporal and spatial coordination represented a profound departure from the capabilities of the legacy or baseload system. Any "smart grid" development will require time for learning, especially by drawing on empirical performance data as they become available. Researchers concluded that time was of the essence in answering the many foundational questions about how to design and evaluate new system capabilities, how to re-write standards and procedures accordingly, how to create incentives to elicit the most constructive behavior from market participants and how to support operators in their efforts to keep the grid working reliably during these transitions. Addressing these questions early may help prevent costly mistakes and delays later on. Aggressive research efforts make it more likely that California will be able to meet its 2020 goals for renewable resource integration.

Project Benefits

This report outlined some of the challenges of integrating renewable into the electric grid at the high penetration levels necessary to meet California's Renewables Portfolio Standard goals. Successful integration of renewable will reduce greenhouse gas emissions that contribute to climate change and could also help increase the reliability of the electric grid.

CHAPTER 1:
Introduction to the Coordination Challenge

Successfully integrating renewable resources in the electric grid at high penetration levels – that is, meeting a 33 percent renewables portfolio standard for California – requires diverse technical and organizational challenges. Some of these challenges have been well-recognized in the literature, while others are emerging from more recent observations. What these challenges have in common is that they can be characterized as a coordination challenge.

Renewable and distributed resources introduce space or location (spatial) and time (temporal) constraints on resource availability. It is not always possible to have the resources available where and when they are required. Though the same is true to some extent for every energy resource, the constraints associated with renewables may be more stringent, and simply different from those constraints which legacy power systems were designed and built around.

New efforts will be required to coordinate these resources in space and time within the electric grid.

Spatial coordination refers to the way resources are interconnected, and ultimately connected to loads, through the transmission and distribution (T&D) system. More precisely, researchers are interested in the location-specific effects of a given resource being connected in a particular place; however, more importantly they must function in relation to other components of the T&D system. Coordination issues include transmission capacity and several distinct aspects of distribution infrastructure such as protection and voltage regulation.

Temporal coordination relates to the time-varying behavior of renewable resources, and how this behavior interacts with other time-varying components – some controllable, some not – on the grid. These other components include electric demand, storage and firming generation of various types, while balancing instantaneous power. Of particular interest is alternating current stability, which is related not only to the crude (hourly) output profile of each resource, but to its dynamic behavior on a much finer time scale.

Operating power systems has changed in recent years in that how various decisions are made has been pushed out in directions of time and distance. Long-term strategic planning has taken on a special significance greenhouse gas reduction goals are considered over future decades. Simultaneously, a combination of economic and technical pressures has made grid operators pay more attention to the grid's dynamic behaviors, some of which occur within a fraction of an alternating current cycle (one-sixtieth of a second). The entire range of these relevant time increments in electric grid operation and planning spans fifteen orders of magnitude: from the micro-second interval on which a solid-state switching device operates, to the tens of years it may take to bring a new fleet of generation and transmission resources online or as a billion seconds (Figure 1).

Figure 1: Time Scales for Power System Planning and Operation

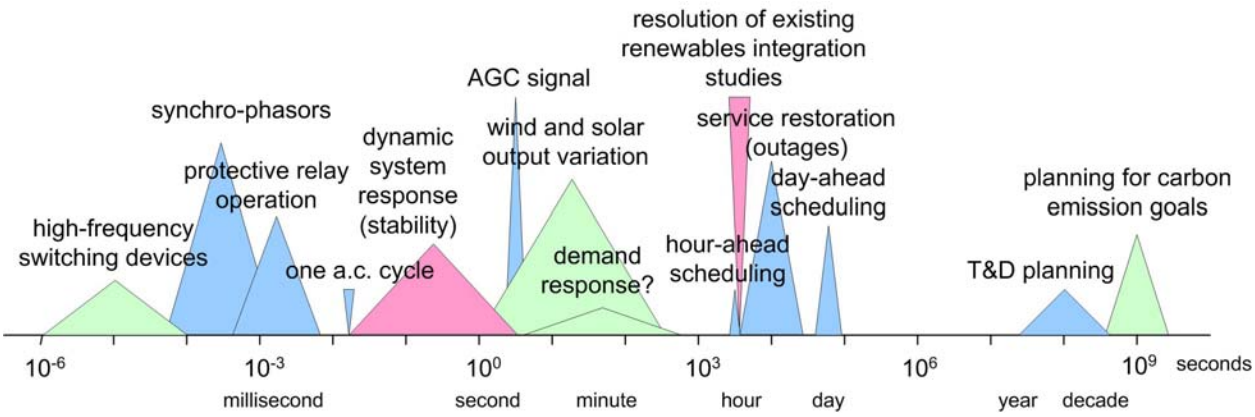

In the spatial dimension, it is also the case that power systems have expanded geographically and become strongly interdependent over long distances, while local effects such as power quality are simultaneously gaining importance. About six orders of magnitude covered - from the very proximate impacts of harmonics (on the scale of an individual building) to the wide-area stability and reliability effects that reach across the Western Interconnect, on the scale of a thousand miles.

The analogous spatial range is illustrated in Figure 2.

Figure 2: Distance Scales for Power System Planning and Operation

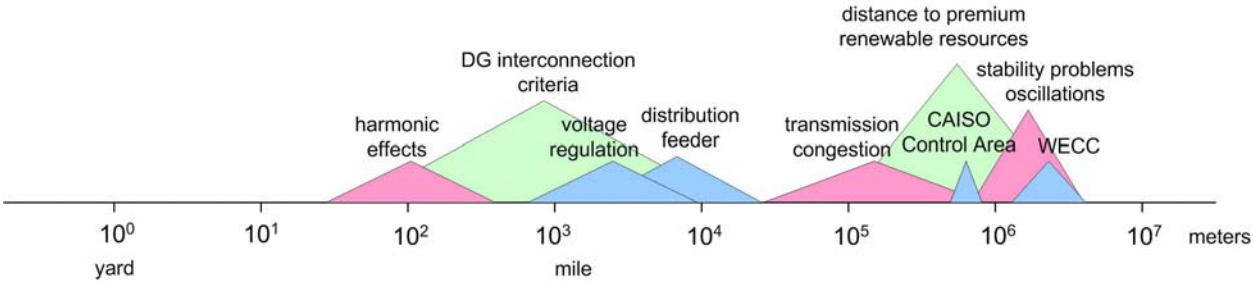

Because of their unique properties, any effort to integrate renewable resources to a high penetration level will push outward time and distance scales on which the grid is operated. For example, it will force distant resource locations to be considered as well as unprecedented levels of distributed generation on customer rooftops. The physical characteristics of these new generators will have important implications for system dynamic behavior. In extending the time and distance scales for grid operations and planning, integrating renewable resources adds to and possibly compounds other, pre-existing technical end economic pressures.

This suggests at least a partial definition for what has recently emerged as a" Holy Grail" or the "smart grid." The "smart grid" is one that allows or facilitates managing electric power systems simultaneously on larger and smaller scales of distance and time. Special emphasis is at the smaller end of each scale, where a "smart grid" allows managing energy and information at higher resolution than the legacy or baseload system. This definition makes no assumptions about the specific management objectives, nor the particular technologies implemented to achieve them. Addressing the challenges of integrating renewable resources will require some forms of "smart" refinement of coordination among resources and capabilities within the grid.

This white paper explains some of the crucial technical challenges, organized as temporal and spatial refinement of energy and information management. It identifies areas that are poorly or insufficiently understood, and where a clear need exists for new or continuing research.

It also categorizes research needs by "action areas," which are activates where new knowledge acquired through research would be applied or implemented. The action areas are:

- System operation
- Standards, rules & procedures
- System design & analysis
- Incentives & public engagement

This categorization is a step toward prioritizing research needs, although these activities do not imply a ranking of urgency or importance. Specific knowledge areas in these action areas should assist placing research projects into policy priorities, while recognizing that work must proceed simultaneously on multiple fronts.

CHAPTER 2:
Temporal Coordination

2.1 Balancing generation and load

2.1.1 Background: Intermittence

The fact that solar and wind power are intermittent and non-dispatchable is widely recognized. More specifically, the problematic aspects of intermittence include the following:

- **High variability of wind power**
  Not only can wind speeds change rapidly, but because the mechanical power contained in the wind is proportional to wind speed cubed, a small change in wind speed causes a large change in power output from a wind rotor.
- **High correlation of hourly average wind speed among prime California wind areas**
  With many wind farms on the grid, the variability of wind power is somewhat mitigated by randomness: especially the most rapid variations tend to be statistically smoothed out once the output from many wind areas is summed up. However, while brief gusts of wind do not tend to occur simultaneously everywhere, the overall daily and even hourly patterns for the best California wind sites tend to be quite similar, because they are driven by the same overall weather patterns across the state.
- **Time lag between solar generation peak and late afternoon demand peak**
  The availability of solar power generally has an excellent coincidence with summer-peaking demand. However, while the highest load days are reliably sunny, the peak air-conditioning loads occur later in the afternoon due to the thermal inertia of buildings, typically lagging peak insolation by several hours.
- **Rapid solar output variation due to passing clouds**
  Passing cloud events tend to be randomized over larger areas, but can cause very rapid output variations locally. This effect is therefore more important for large, contiguous photovoltaic arrays (that can be affected by a cloud all at once) than for the sum of many smaller, distributed PV arrays. Passing clouds are also less important for solar thermal generation than for PV because the ramp rate is mitigated by thermal inertia (and because concentrating solar plants tend to be built in relatively cloudless climates, since they can only use direct, not diffuse sunlight).
- **Limited forecasting abilities**
  Rapid change of power output is especially problematic when it comes without warning.

In principle, intermittence can be addressed by firming resources, including

- reserve generation capacity
- dispatchable generation with high ramp rates
- generation with regulation capability
- dispatchable electric storage

- electric demand response

that can be used in various combinations to offset the variability of renewable generation output. Vital characteristics of these firming resources include not only the capacity they can provide, but their response times and ramp rates.

2.1.2 Research Needs Related to Intermittence

Existing models for combining large contributions of renewable resources, and matching them broadly with firming resources such as reserve generation, use a standard one-hour time resolution. Hourly modeling addresses crucial concerns about resource availability and fits into standard planning tools, such as filling the area under a load duration curve.

Figure 3 illustrates a hypothetical scenario for fitting a set of renewable resources within a load duration curve, which shows system-wide electric demand on an hourly basis with the 8760 hours of the year ranked from highest to lowest demand. This particular graphic was produced as part of a modeling exercise over 20 years ago by PG&E's Research and Development Department; it never represented an actual plan or corporate strategy. However, the graphic nicely illustrates the concept of matching non-dispatchable with dispatchable generating resources on an hourly basis, and it shows the researchers' prescience and courage to imagine out loud a renewable portfolio as high as 100 percent.

Figure 3: Load Duration Curve Filled with Renewables

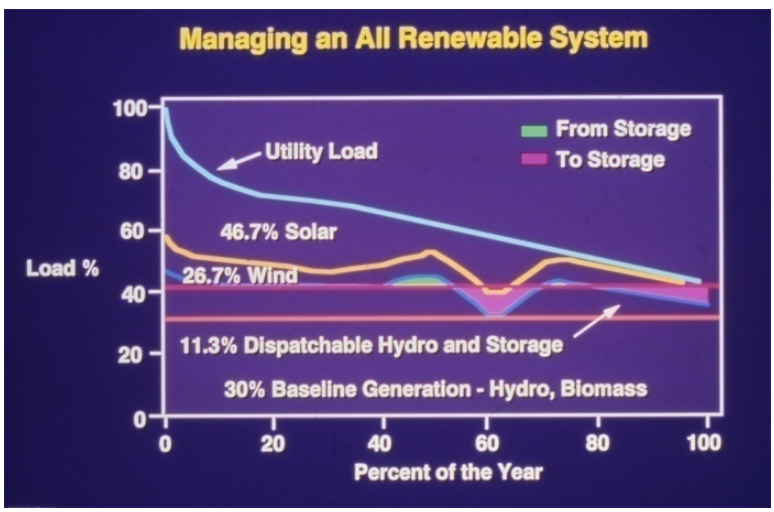

Source: PG&E, 1989

Consistent with contemporary observation, Figure 3 suggests that while the integration of renewable resources at very high system penetration may present some serious problems, matching generation with load on an hourly basis, at least from the theoretical standpoint of resource availability, is probably not one of them. Rather, the more critical technical issues seem to appear at finer time resolution, as illustrated in Figure 4.

One problematic aspect is resource forecasting on a short time scale. Solar and wind power forecasting obviously hinges on the ability to predict temperature, sunshine and wind

conditions. While weather services can offer reasonably good forecasts for larger areas within a resolution of hours to days, ranges of uncertainty increase significantly for very local forecasts.

Ideally, advance warning could be provided at the earliest possible time before variations in solar and wind output occur, to provide actionable intelligence to system operators.

Figure 1: Resource Modeling and Forecasting Time Scales

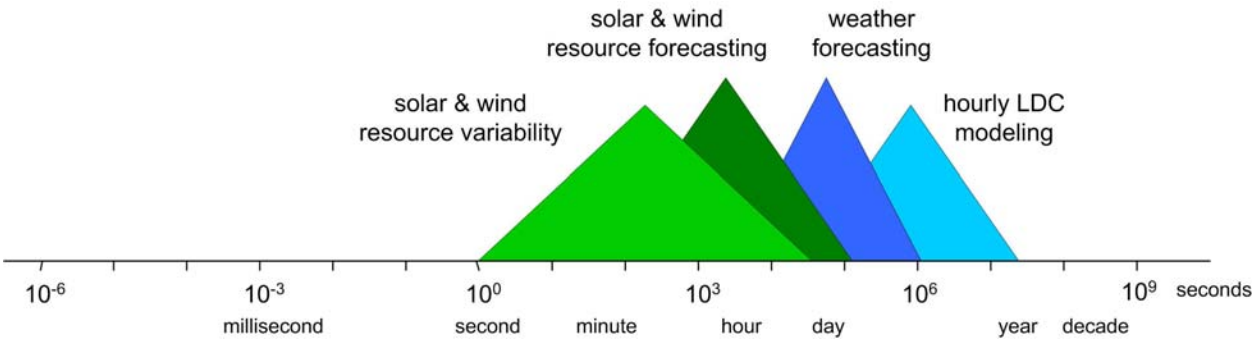

Needed:

- Real-time forecasting tools for wind speed, temperature, total insolation (for PV) and direct normal insolation (for concentrating solar), down to the time scale of minutes
- Tools for operators that translate weather forecast into renewable output forecast and action items to compensate for variations.

A related question is the extent to which the variability of renewable resources will cancel or compound at high penetration levels, locally and system-wide. Specifically, we wish to know how rapidly aggregate output will vary for large and diverse collections of solar and wind resources.

Needed:

- Analysis of short-term variability for solar and wind resources, individually and aggregate, to estimate quantity and ramp rates of firming resources required.
- Analysis of wide area deployment of balancing resources such as storage, shared among control areas, to compensate effectively for short-term variability.[1]

The above research needs apply to Action Area I: System Operation.

2.1.3 Background: Firming Resources

Resources to "firm up" intermittent generation include

- reserve generation capacity
- dispatchable generation with high ramp rates

[1] Research by Makarov et al. (Pacific Northwest National Laboratory) under CEC Contract 500-07-037 (Tasks 3.1 and 4.2) addresses this question.

- generation with regulation capability
- dispatchable electric storage
- electric demand response

The various types of firming generation resources are distinguished by the time scale on which they can be called to operate and the rate at which they can ramp power output up or down. Characteristically, the most responsive resources would include hydroelectric generators and gas turbines. Since these technologies and their applications are well understood, this white paper does not address firming generation in further detail. The more difficult question is how much of each might be needed.

Electric storage includes a range of standard and emerging technologies:

- pumped hydro
- stationary battery banks
- thermal storage at solar plants
- electric vehicles
- compressed air (CAES)
- supercapacitors
- flywheels
- superconducting magnetic (SMES)
- hydrogen from electrolysis or thermal decomposition of H_2O

Note that an inexpensive, practical, controllable, scalable and rapidly deployable storage technology would substantially relieve systemic constraints related to renewables integration. This white paper focuses on research needs assuming no such panacea, but only incremental improvements of available technologies.

A crucial observation about electric storage is that different time targets likely match with different technologies and deployment strategies, and system operators would use these storage resources for distinct purposes. The spectrum of time scales for different storage applications is illustrated in Figure 5.

- months: seasonal energy storage
- 4-8 hours: demand shifting
- 2 hours: supplemental energy dispatch
- 15-30 minutes: up- and down-regulation
- seconds to minutes: solar & wind output smoothing

- sub-milliseconds: power quality adjustment; flexible AC transmission system (FACTS) devices that shift power within a single cycle

Figure 5: Energy Storage Time Scales

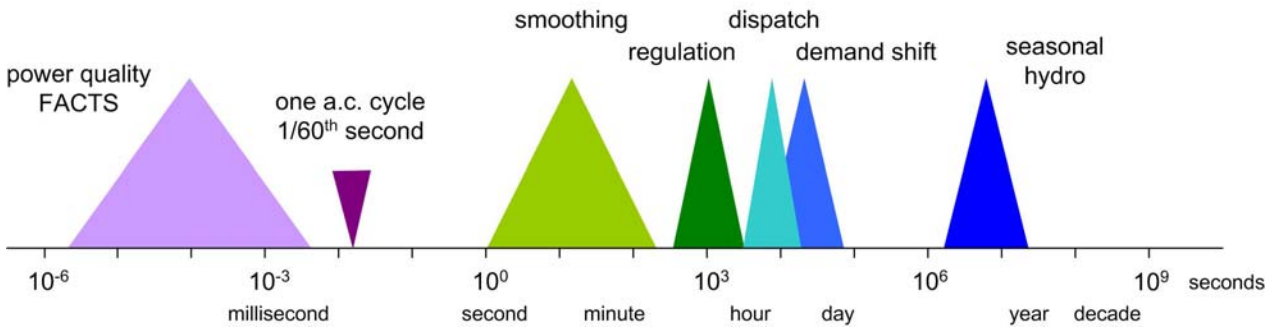

2.1.4 Research Needs Related to Firming Resources

Given that storing electric energy is generally expensive compared to the intrinsic value of the energy, the pertinent questions at this time concern what incentives there are for electric storage, at what level or type of implementation, and for what time target. Three fundamentally different implementation types and some of their key characteristics are as follows:

- **Storage at system level**

Electric storage is considered as a resource supporting the transmission and distribution (T&D) system as a whole, controlled by grid operators.

Potential benefits of this approach include economies of scale, and opportunities to optimize design, sizing and siting with system needs in mind.

The economic value of system-wide storage can be quantified in terms of the arbitrage value of buying and selling energy at different times and prices, and in terms of ancillary services to the grid (similar to, say, spinning reserve). Whether these market values provide sufficient incentive for storage capacity to be built at the system level, or to what extent storage would be a rate-based investment by utilities, are open questions.

- **Storage packaged with generation**

Packaging storage capacity with intermittent renewable generation would allow these generators to bid firm capacity into the market.

A potential benefit of this approach is that the incentive threshold for installing storage capacity may be lower if it is part of a generation project under concurrent construction. Its economic value would be estimated in terms of the market viability of the generator as a firm versus non-firm bid.

Unless storage is thermal, it need not strictly be physically co-located with generation, although netting generation against storage before the point of common coupling (PCC) with the grid would be the simplest and most obvious arrangement.

Another possible benefit of local storage packaged with intermittent generation is that it implies a reduced need for data flow and central control as compared to system-wide storage.

A possible economic downside is that storage capacity (for either power or energy) may not be maximally utilized if it serves only one specific generator.

- **Electric vehicles**

Plug-in electric vehicles, with the options of both Grid-to-Vehicle (G2V) and Vehicle-to-Grid (V2G) power flow, might be considered the elephant in the room of electric energy storage. Depending on the market penetration of electric vehicles, the collective MWh capacity represented by car batteries could dominate all other grid-connected storage. To appreciate the significance, consider that the physical work done in an average day of driving is easily on the same order of magnitude as a day's worth of residential electricity consumption. The catch, of course, is utilizing this storage capacity in some organized manner, considering that consumers purchase decisions and usage of the technology will likely be motivated in large part by factors unrelated to electric grids.

Electric vehicle batteries as grid-connected storage capacity could thus imply a vast range of systemic impacts, from highly advantageous to highly problematic, depending on how successfully the timing of vehicle charging and/or discharging can be controlled or encouraged to coincide with the grid's needs.

In addition to timing mismatch between EV charging and available generation, local distribution capacity is likely to be an important constraint – especially the capacity of primary-to-secondary distribution transformers.

Needed:

- Technological research, development and demonstration on emerging storage technologies and systems

This research need applies to Action Area I: System Operation.

- Ongoing study of electric vehicle impacts, including mechanisms for controlling charging patterns or designing incentives

This research need applies to Action Areas I, II and IV: Operation; Standards, Rules & Procedures; Incentives & Public Engagement.

- Methods and policies for valuing and compensation of firming resources
- Comparative economic analysis of incentive mechanisms for storage:
    - at different levels (e.g., systemic approach vs. packaged with generation)
    - for different time targets
    - barriers to implementation

These needs apply to Action Areas III and IV: System Design & Analysis; Incentives & Public Engagement.

2.1.5 Background: Demand Response

Demand response (DR) approaches include

- consumer response to time-of-use or real-time pricing
- rotating outages (undesirable)
- local automated thermostat control (responsive to price signal)
- remote thermostat control
- direct load control (remote off-switching)

It is important to distinguish between human and technical components of demand response, all of which must be in place for the response action to occur. In sequence, these components are:

- human preference decision (e.g. motivation to participate in DR program; personal trade-off between $ and kW)
- human action (e.g. flipping switch; turning load on at a particular time)
- information transfer (e.g. real-time price to meter; signal to load device)
- device action (e.g. thermostat changes setpoint; device flips switch)

The overarching goal of demand response is to combine the above components in functional mechanisms to maximize social benefit, providing technical relief to grid and human satisfaction to customers.

2.1.6 Research Needs Related to Demand Response

A critical human dimension for the success of demand response is the simple question: What do and don't customers want in their homes? Demand response could be framed in a customer's mind in any number of ways:

- The opportunity to earn a windfall?
- Relief from excessive bills?
- Responsible citizenship?
- Environmental action?
- Privacy intrusion?
- Rationing?
- Rip-off?

Customers' priorities may be diverse and sometimes conflicting; they may include being "green," frugal, technophile, or valuing convenience. Even if preferences are expressed – e.g., in survey responses – it is not given that customers' actual behavior will always be consistent with declared preferences.

Needed:

- Psychological, behavioral and linguistic research to
  - clarify customer views and preferences
  - enable effective communication strategies
  - help design DR programs to achieve intended results
- Information technology research to help assure data security
- Technical and legal specifications for appropriate privacy protocols

These needs apply to Action Areas II and IV: Standards, Rules & Procedures; Incentives & Public Engagement.

Technical dimensions that we do not understand well include the following:

- How best to match hardware, communications platforms and protocols with control strategies and response objectives?
- How to attain maximal aggregate response with minimal impact on individual device performance?
- On what time scale can response be realistically achieved and matched to variable generation from renewable resources as a firming resource? (See Figure 6.)
- What is the magnitude and persistence of response we can realistically plan to achieve?[2]

Figure 6: Demand Response Time Scales

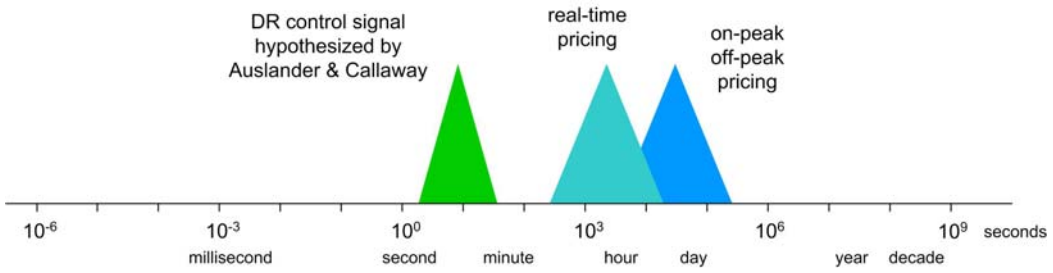

[2] Work by Auslander & Callaway (U.C. Berkeley) under CEC Contract 500-99-013, POB 231-B45 (Tasks 4, 5, 6) addresses the above questions, specifically examining demand response on the time scale of several seconds.

Needed:

- Characterization of diverse hardware, communications platforms and protocols
- Statistical modeling of aggregate demand response under diverse control scenarios
- Evaluation of demand response as a practical and economic tool for up- and down-regulation
- Detailed simulation of control scenarios, leading to *in situ* implementation of experimental pilots

These needs apply to Action Areas I and III: System Operation; System Design & Analysis.

2.2 Dynamic Behavior and Grid Stability

2.2.1 Background: Dynamic Behavior

Alternating-current (a.c.) power systems exhibit behavior distinct from direct-current (d.c.) circuits. Their essential characteristics during steady-state operation, such as average power transfer from one node to another, can usually be adequately predicted by referring to d.c. models. But as a.c. systems become larger and more complex, and as their utilization approaches the limits of their capacity, peculiar and transient behaviors unique to a.c. become more important.

A simplified view of power flow through a transmission network can be represented by a d.c. equivalent model that captures basic quantities of power in MW produced and consumed at different locations (nodes) in the grid, and the amount of electric current or power traveling through each link in the network. For modeling at the transmission system level, each network node or bus represents a generator, a load (such as a substation) or both, and the line flows are determined by computer simulation (power flow analysis). This type of analysis can show if different scenarios of meeting demand with combinations of supply (dispatch) are fundamentally consistent with thermal transmission limits and security constraints. (In the days before computers, grid operators actually referred to a physical scale model of wires carrying d.c. to simulate line flows in their grid.)

However, the physical characteristics of alternating current in a highly interconnected network used at near maximum capacity demand a far more involved analysis than the d.c. equivalent model. For one, a.c. power flow must account for both real and reactive power balance at any given instant in time. (Reactive power refers to an oscillating power transfer between generators and loads that is driven by a timing or phase shift between voltage and current, produced by "reactive" loads such as motors.)

Furthermore, a.c. power flow involves a subtle profile of variations in the magnitude and the precise timing or "phase" of the alternating voltage (that is, the timing of the voltage itself, not the phase difference between voltage and current). This voltage phase angle is measured in degrees, where 360° represents a complete oscillation. The precise magnitude of voltage at any given point in the network is measured on a "per unit" (p.u.) basis relative to its nominal value.

The combination of voltage magnitude and angle is expressed in engineering shorthand as a "phasor," based on a convenient mathematical representation.

Figure 7 illustrates an a.c. power flow case for a very simple six-bus network. Note that each bus is has a different voltage phasor, where each phasor comprises a magnitude and an angle. As a general rule, real power tends to flow from greater to lesser voltage angle, and reactive power from greater to lesser voltage magnitude. The precise relationship continually changes with operating conditions and can only be predicted with a numerical simulation model. Note that California has not six but over 4,000 buses for purposes of transmission modeling.

Figure 7: Small A.C. Power Flow Model

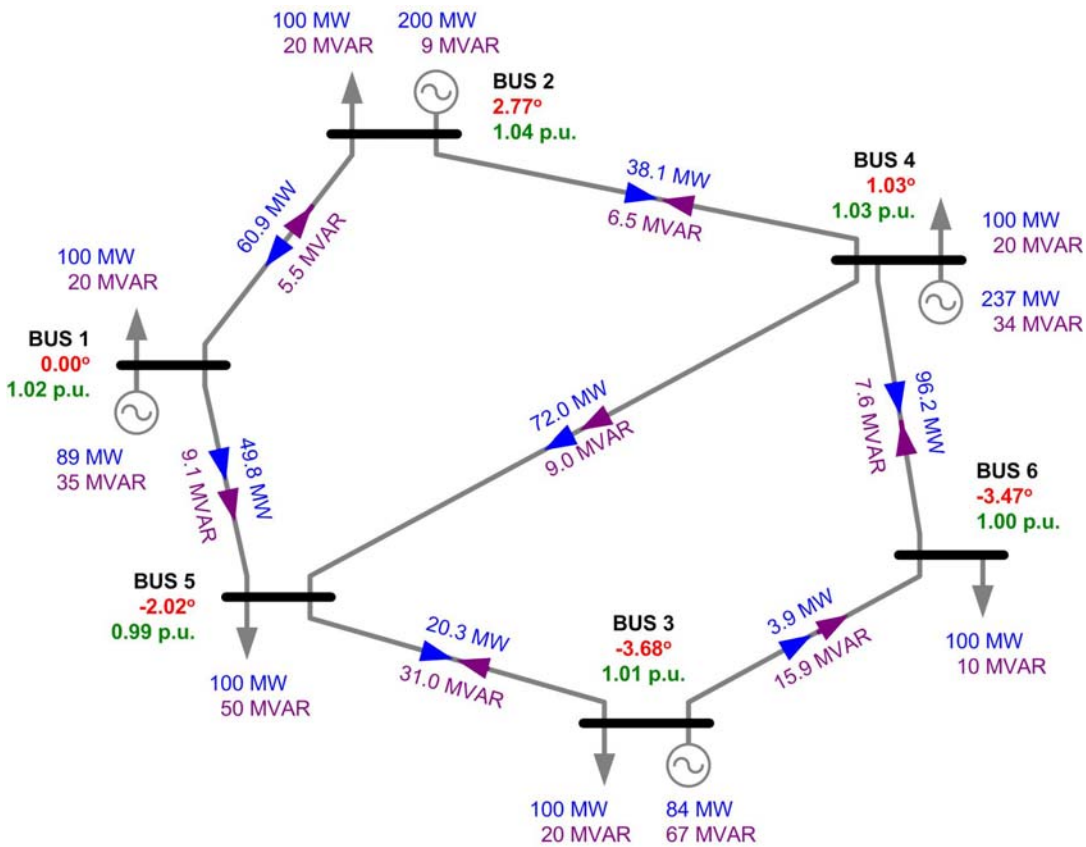

A.c. system stability requires that voltage magnitudes and angles maintain a specific relationship with real and reactive power at each bus. The voltage phase angle at each generator is primarily related to its real power injection (angle stability), and voltage magnitude is primarily related to reactive power (voltage stability). Angle stability means that any departure from equilibrium (i.e., the generator pulling ahead or dropping behind) will meet with a restoring force that tends to return the generator to synchronicity with other generators at the system frequency (60 Hz). This restoring force is essentially a negative feedback effect, resulting from electromagnetic interaction, that makes accelerating generators push harder and decelerating generators push less hard. Angle stability is also assisted by the mechanical inertia of traditional large turbine-generators, which resists changes in rotational speed.

The difference between phase angles at any two generators must not exceed a certain value, or else this negative feedback between them may be lost; if this happens, generators will under- or over-speed and protective relays will separate them from the system. The permissible difference in phase angles across any given transmission link is referred to as the "stability limit," and for long a.c. lines in California the stability limit may be more stringent than a line's thermal rating.

Large a.c. systems may also exhibit low-frequency (on the order of 1 Hz) oscillations of voltage phasors across wide areas, which are an as yet poorly understood phenomenon. Such oscillations are most likely to occur when large amounts of power are sent over long distances in a complex network. Until recently, oscillations were difficult to even detect, as legacy power systems had no means of providing relevant phasor data. This is because the relevant information lies in the timing of voltage *relative* to other locations, requiring not only instrumentation to precisely measure the voltage sine wave at a given location, but a precise time stamp to synchronize each measurement with others via GPS satellite – thus the term "synchro-phasors."

Building on recent R&D efforts,[3] California has begun to take a leadership role in implementing synchro-phasors. The introduction of phasor measurement units (PMUs) at different points in the network allows operators to see a profile of phasors in real-time, which offers an essential characterization of the system's overall operating state as well as a diagnostic indicator of potentially developing problems.

Figure 8 illustrates oscillations measured at the California-Oregon border prior to a major outage in 1996 with phasor measurements (which were not available to system operators in real-time). Note the contrast with the power flow model that indicates no impending problems.

[3] Eto, Joe et al. 2008. *Real Time Grid Reliability Management.* California Energy Commission, PIER Transmission research Program. CEC-500-2008-049.

Figure 8: Power Flow Oscillations

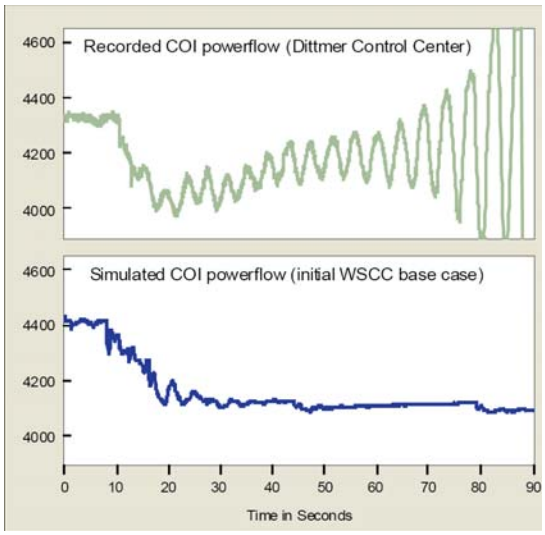

A "steady-state" analysis of an a.c. power system refers to a set of voltages, angles and power flows that are holding steady under a given configuration of generation and load. By contrast, oscillations are an example of dynamic behavior, because even without changes in generation and load, the operating state is not holding steady. The analysis of dynamic stability is primarily concerned with the question of how well oscillations are damped: in other words, how rapidly will the system return to a steady state if a perturbation arises?

In addition to oscillations that arise spontaneously in large and complex systems, perturbations from the steady operating state may include any number of commonplace events (such as the sudden loss of a generator or transmission link) or transient conditions (such as two phases of a transmission line briefly touching). These perturbations mean that the system has to either recover its former operating state, or transition from one operating state to another. Dynamic stability addresses the question of whether and how smoothly the system can recover, or transition to the new operating state without further incident.

Traditional rotating generators support grid stability by resisting changes in rotational speed, both due to magnetic forces and their own mechanical rotational inertia; this is illustrated in Figure 9. Through their inherent tendency to keep rotating at a constant speed, these generators give the entire a.c. system a tendency to return to a steady operating state in the face of disturbances. Legacy power systems were designed with this inertial behavior in mind.

Figure 9: Generator Stability

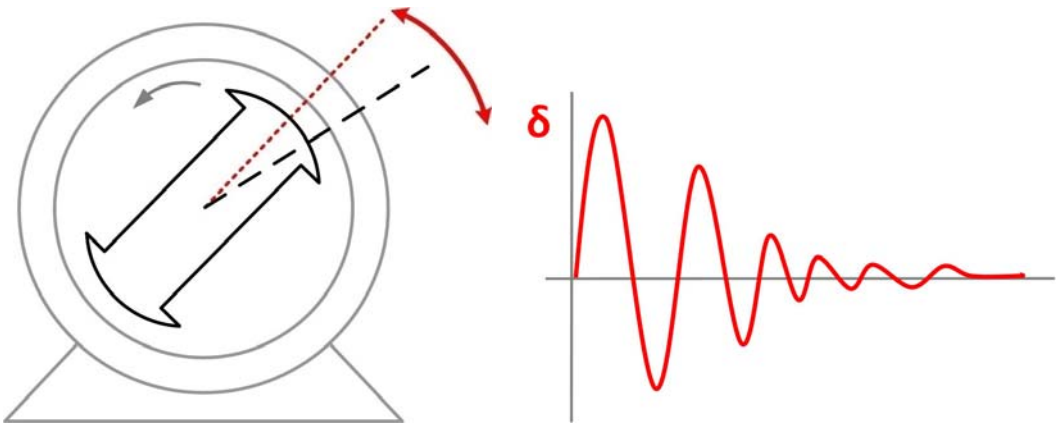

2.2.2 Research Needs Related to Dynamic Behavior

Unlike conventional rotating generators, inverters produce alternating current by very rapid on-off switching within solid-state semiconductor materials. Inverters are used whenever 60-Hz a.c. power is supplied to the grid from

- d.c. sources such as PV modules, fuel cells or batteries
- variable speed generators, such as wind whose output is conditioned by successive a.c.-d.c.-a.c. conversion (this does not include all wind generators, but a significant fraction of newly installed machines).

What we do not understand well are the dynamic effects on a.c. systems of switch-controlled generation:

- How will switch-controlled generators collectively respond to temporary disturbances, and how can they act to stabilize system voltage and frequency?
- What will be the effect of switch-controlled generation on wide-area, low-frequency oscillations?
- Can inverters "fake" inertia and what would it take to program them accordingly?
- What is the minimum system-wide contribution from large, rotating generators required for stability?

Needed:

- Modeling of high-penetration renewable scenarios on a shorter time scale, including dynamic behavior of generation units that impacts voltage and frequency stability
- Generator models for solar and wind machines

- Inverter performance analysis, standardization and specification of interconnection requirements that includes dynamic behavior
- Synchro-phasor measurements at an increased number of locations, including distribution circuits, to diagnose problems and inform optimal management of inverters

These needs apply to Action Areas I, II and III: System Operation; Standards, Rules & Procedures; System Design & Analysis.

CHAPTER 3:
Spatial Coordination

Relevant distance scales in power system operation span six orders of magnitude, from local effects of power quality on the scale of an individual building to hundreds or even thousands of miles across interconnected systems. A "smart grid" with high penetration of renewables will require simultaneous consideration of small- and large-scale compatibilities and coordination.

3.1 Transmission Level: Long-distance Issues

3.1.1 Background: Transmission Issues

The need for transmission capacity to remote areas with prime solar and wind resources is widely recognized. It is worth noting that renewable resources are not unique in imposing new transmission requirements. For example, a new fleet of nuclear power plants would likely be constrained by siting considerations that would similarly require the construction of new transmission capacity. In the case of solar and wind power, however, we know where the most attractive resources are – and they are not where most people live.

Challenges for transmission expansion include social, economic and technical factors. Social and economic challenges for transmission expansion include

- Long project lead times for transmission siting, sometimes significantly exceeding lead times for generation
- NIMBY resistance to transmission siting based on aesthetics and other concerns (e.g., exposure to electromagnetic fields)
- Higher cost of alternatives to visible overhead transmission
- Uncertainty about future transmission needs and economically optimal levels

On the technical side,

- Long-distance a.c. power transfers are constrained by stability limits (phase angle separation) regardless of thermal transmission capacity
- Increased long-distance a.c. power transfers may exacerbate low-frequency oscillations (phase angle and voltage), potentially compromising system stability and security

Both of the above technical constraints can in theory be addressed with a.c.-d.c. conversion, at significant cost. The crucial point, however, is that simply adding more, bigger wires will not always provide increased transmission capacity for the grid. Instead, it appears that legacy a.c. systems are reaching or have reached a maximum of geographic expansion and interconnectivity that still leaves them operable in terms of the system's dynamic behavior. Further expansion of long-distance power transfers, whether from renewable or other sources, will very likely require the increased use of newer technologies in transmission systems to overcome the dynamic constraints.

3.1.2 Research Needs Related to Transmission

On the social-political and economic side, research needs relate to the problems of deciding how much transmission is needed where, and at what reasonable cost to whom. In addition, options for addressing siting constraints can be expanded by making transmission lines less visible or otherwise less obtrusive.

Needed:

- Analysis of economic costs and benefits to communities hosting rights of way
- Political evaluation of accelerated siting processes
- Continuing analysis to identify optimal investment level in transmission capacity relative to intermittent generation capacity, and to evaluate incentives
- Public education, including interpretation of findings regarding EMF exposure
- Continuing R&D on lower-visibility transmission technologies, including compact designs and underground cables

These needs apply to Action Areas II, III and IV: Standards, Rules & Procedures; System design & analysis; Incentives & Public Engagement.

On the technical side, research needs relate to the technical capability of making the system work effectively, even given the political and economic means to install the desired hardware.

Needed:

- Dynamic system modeling on large geographic scale (WECC) providing analysis of
  - likely stability problems to be encountered in transmission expansion scenarios
  - benefit potential of various d.c. link options
- Continuing R&D on new infrastructure materials, devices and techniques that enable transmission capacity increases, including
  - dynamic thermal rating
  - power flow control, e.g. FACTS devices
  - fault current controllers
  - intelligent protection systems, e.g. adaptive relaying
  - stochastic planning and modeling tools
  - new conductor materials and engineered line and system configurations[4]

[4] Brown, Merwin, et al., *Transmission Technology Research for Renewable Integration*, California Institute for Energy and Environment, University of California, 2008, provides a detailed discussion of these research needs.

3.2 Distribution Level: Local Issues

A significant class of challenges to the integration of renewable resources is associated primarily with distributed siting, and only secondarily with intermittence of output. These site-specific issues apply equally to renewable and non-renewable resources, collectively termed distributed generation (DG).

However, DG and renewable generation categories overlap to a large extent due to

- technical and environmental feasibility of siting renewables close to loads
- high public interest in owning renewable generation, especially photovoltaics (PV)
- distributed siting as an avenue to meet renewable portfolio standards (RPS), augmenting the contribution from large-scale installations

Motivation exists; therefore, to facilitate the integration of distributed generation, possibly at substantial cost and effort, if this generation is based on renewable resources.

3.2.1 Background: Overview of Distributed Generation and Technical Issues

DG is generation connected at the distribution level (primary or secondary), signifying

- jurisdiction: involves specific standards and distribution division of utility
- functional placement: low-voltage, customer side of substation
- voltage level: 120V up to tens, not hundreds of kilovolts (kV)
- scale: generally less than 1 MW, with many installations of few kW

Figure 10 provides a visual context for the distinction between distribution and transmission. One-line diagrams like this are not drawn to scale geographically, but emphasize functional connectivity. Each of the heavy vertical lines represents a "bus "that would be a node in an analysis of the transmission network; the wavy symbols represent transformers, and the square symbols represent circuit breakers. Each color corresponds to a particular voltage level. While traditional central-station generation is shown interconnecting at the transmission level, distributed generation would be interconnected within the brown or red-colored portions of the system in the diagram.

A crucial characteristic of distributed generation is that the initiative for it comes from a large number of customers. Utilities can prohibit distributed generation if it does not meet criteria specified in interconnection rules, or encourage its deployment through incentives, but they lack certainty and positive control over when and where DG will be sited.

Distributed generation may therefore be clustered, with much higher penetration on individual distribution feeders than the system-wide average, for any number of reasons outside the utility's control, including local government initiatives, socio-economic factors, or neighborhood social dynamics.

Figure 10: Transmission and Distribution System Diagram

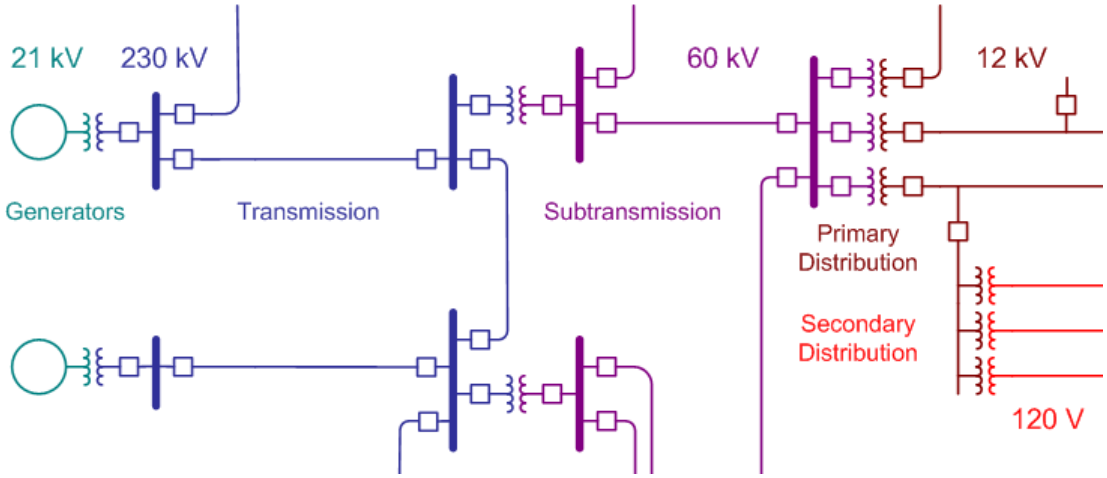

The actual effects of distributed generation at high penetration levels are still unknown but are likely to be very location specific, depending on the particular characteristics of individual distribution feeders.

Penetration limits are presently imposed by interconnection standards, which include the national IEEE 1547 standard as well as California's Rule 21. These standards require ongoing revision in view of new technological capabilities, pressure to meet RPS objectives, and empirical performance data as DG levels increase.5

Technical issues associated with high local penetration of distributed generation include

- **Clustering:**

  The local effects of distributed generation depend on local, not system-wide penetration (percent contribution).
  Local penetration level of distributed generation may be clustered on individual feeders for reasons outside the utility's control, such as
  - local government initiatives
  - socio-economic factors, including neighborhood social dynamics

  Clustering density is relative to the distribution system's functional connectivity, not just geographic proximity, and may therefore not be obvious to outside observers.
- **Transformer capacity:**

  Locally, the relative impact of DG is measured relative to load – specifically, current. Equipment, especially distribution transformers, may have insufficient capacity to accommodate amounts of distributed generation desired by customers.
  Financial responsibility for capacity upgrades may need to be negotiated politically.

[5] Work by Vadhva et al. (Sacramento State) under POB231-B45 (Task 1) details and examines adequacy of current interconnection standards

- **Modeling:**

  From the grid perspective, DG is observed in terms of net load. Neither the amount of actual generation nor the unmasked load may be known to the utility or system operator. Without this information, however, it is impossible to construct an accurate model of local load, for purposes of
  - forecasting future load, including ramp rates
  - ascertaining system reliability and security in case DG fails

  Models of load with high local DG penetration will have to account for both generation and load explicitly in order to predict their combined behavior.
- **Voltage regulation:**

  Areas of concern, explained in more detail in the Background section below, include
  - maintaining voltage in permissible range
  - wear on existing voltage regulation equipment
  - reactive power (VAR) support from DG
- **Protection:**

  Areas of concern, explained in more detail in the Background section below, include
  - backfeed (reverse power flow)
  - fault current contribution from DG
  - relay desensitization
- **Islanding:**

  Areas of concern and strategic interest, explained in more detail in the Background section below, include
  - preventing unintentional islanding
  - application of microgrid concept
  - variable power quality and reliability

Overall, the effect of distributed generation on distribution systems can vary widely between positive and negative, depending on specific circumstances that include

- the layout of distribution circuits
- existing voltage regulation and protection equipment
- the precise location of DG on the circuit

One crucial observation, therefore, is that the siting of DG cannot be arbitrary relative to the existing distribution system, but that specific locational effects must be considered.

3.2.2 Background: Voltage Regulation

Utilities are required to provide voltage at every customer service entrance within permissible range, generally ±5 percent of nominal. For example, a nominal residential service voltage of 120V means that the actual voltage at the service entrance may vary between 114 and 126 V. Due to the relative paucity of instrumentation in the legacy grid, the precise voltage at different points in the distribution system is often unknown, but estimated by engineers as a function of system characteristics and varying load conditions.

Figure 11: Voltage Drop

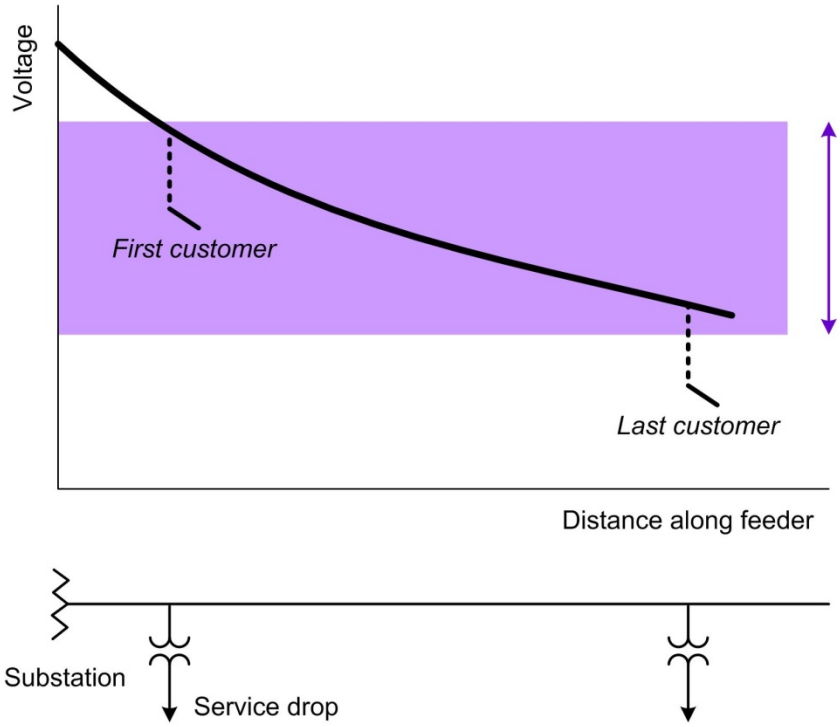

The laws of physics dictate that a voltage drop occurs along distribution line, as illustrated in Figure 11. The slope of this voltage drop depends on the line's electrical impedance and the current flow. Figure 12 illustrates how voltage may be adjusted so that it falls within the permissible range everywhere on the feeder.

Figure 12: Voltage Adjustment

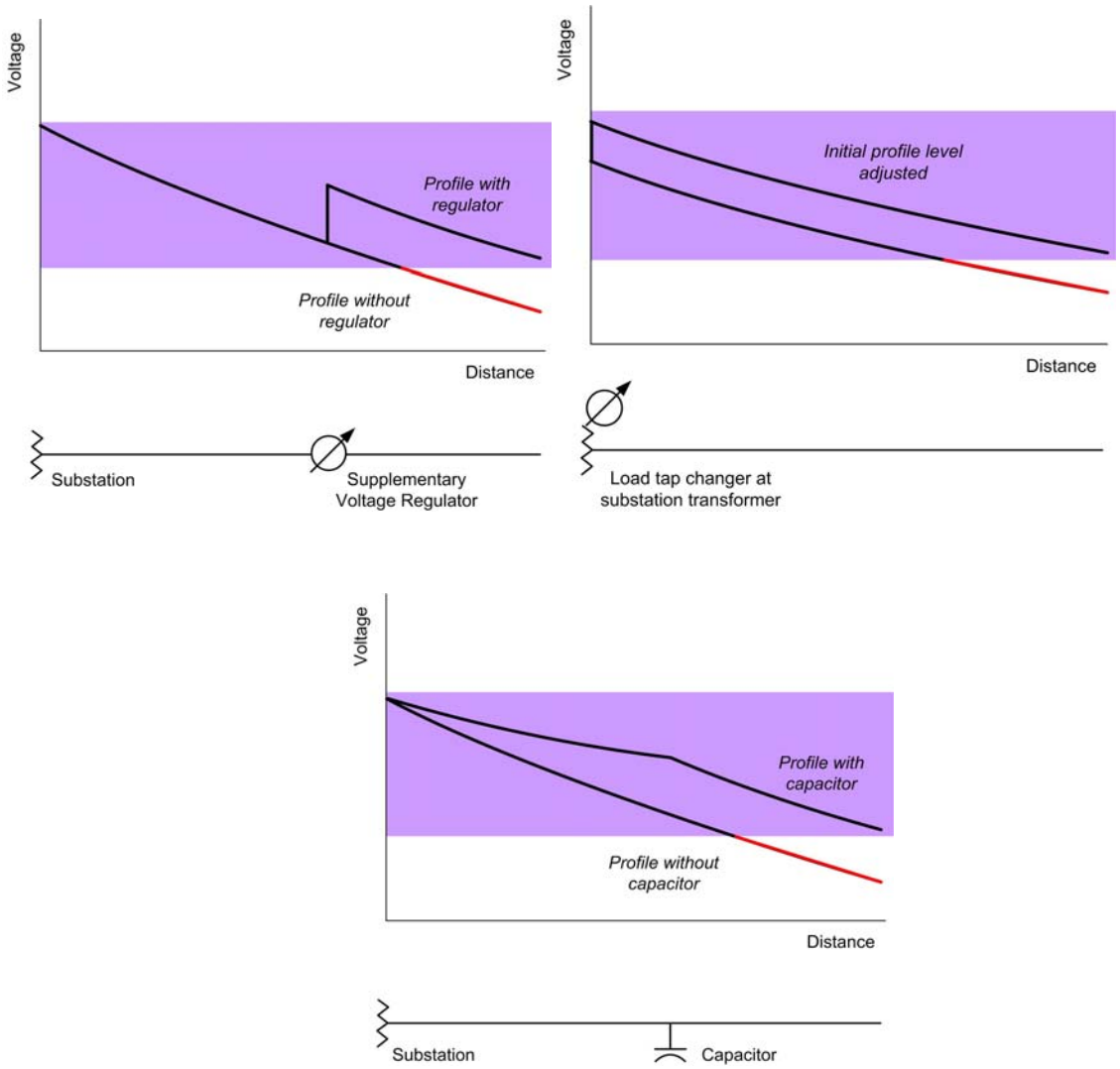

The substation transformer at the beginning of a feeder generally allows adjustment of the initial voltage level through a movable connection called a load tap changer, or LTC. Load tap changers adjust the secondary (output) voltage by changing the number of effective wire turns in a transformer, with a range of steps where the line contacts or taps the transformer coil.

If feeder is long and voltage drop is too steep to stay within range throughout, further adjustments are made along the way, using voltage regulators or capacitors. Voltage regulators are essentially adjustable transformers.

Capacitors reduce the slope of voltage drop by locally reducing reactive power flow. Reactive power is associated with a time lag between current and voltage, caused by reactive loads (primarily motors, but anything based on coils of wire), that force additional current to circulate through lines. This circulating current does not transport useful energy from power plants to loads; rather, it is wasteful in that it takes up equipment capacity (limited by heat) and contributes to line losses.

Reactive compensation (also known as VAR support, where VAR stands for "volt-ampere reactive," a unit very similar to watts that measures reactive power) reduces current flow by counteracting the time lag between current and voltage ("power factor correction"). This means that the current associated with reactive power has to circulate only between the load and the capacitor (installed somewhere on the distribution system), rather than circulating all the way back to a power plant. As a result, the current flow upstream from the capacitor is reduced, which also reduces the voltage drop leading to it. Reactive compensation may be provided by

- capacitors, which basically consist of parallel conducting plates
- synchronous generators or synchronous condensers, which are rotating machines with an adjustable magnetic field
- static VAR compensators (SVCs), which contain a combination of capacitors and solid-state switching apparatus
- switch-controlled generation, i.e. solid-state inverters with adjustable power factor

Banks of capacitors can simply be switched on or off; other reactive compensation devices may be adjusted to provide variable amounts of reactive power (and thus make continuous voltage adjustments over a range).

Adjustments to voltage regulation equipment settings can be initiated by

- Manual setting on location, seasonally or based on information (e.g. load level) gathered elsewhere
- Direct voltage measurement by LTC or voltage regulator, which senses voltage and automatically adjusts step
- Remote signal to switch capacitor bank on or off, transmitted by radio or other communications, based on real-time load data gathered elsewhere
- Timers, based on known correlation of voltage drop with load, and load with time of day, is sometimes used for capacitor bank switching

Note that instrumentation for real-time voltage measurement may not be in place along many distribution feeders.

3.2.3 Research Needs Related to Voltage Regulation

By changing local load, distributed generation directly impacts the voltage drop along a distribution feeder and thus impacts the need for voltage regulation. When DG is on and reduces net load, it reduces the slope of voltage drop and increases local voltage.

Different settings of load tap changer (LTC) or other voltage regulation equipment may be required to maintain voltage in permissible range as DG turns on and off.

Potential problems include the following:

- DG drives voltage out of the range of existing equipment's ability to control

- Due to varying output, DG provokes frequent operation of voltage regulation equipment, causing excessive wear
- DG creates conditions where voltage profile status is not transparent to operators

Figure 13 illustrates how DG may drive the voltage outside the range unless voltage regulation settings are changed according to DG output at any given time.

Figure 13: Voltage Drop with DG

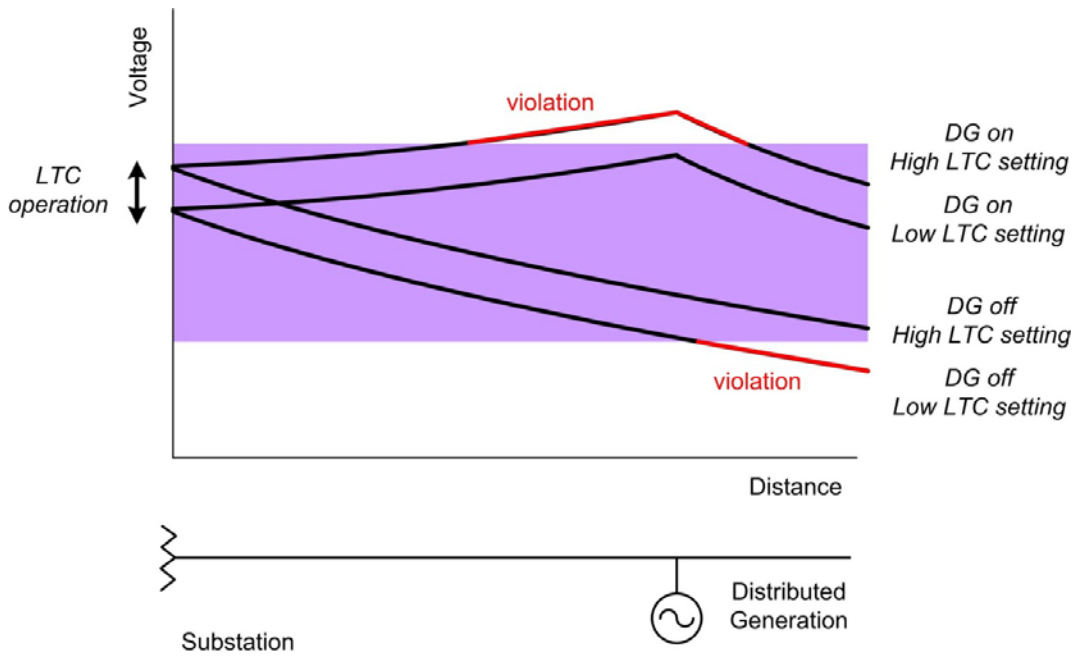

However, because DG provides a means to raise voltage – not only by reducing net load, but also by offsetting reactive power – it also offers, in principle, potential benefits:

- DG with adjustable power factor may obviate or defer the need for alternative investments in VAR support (although only to the extent that peak reactive power needs can be met without DG in case it becomes unavailable)
- DG may provide additional VAR support, increasing systemic efficiency by reducing losses in lines and transformers
- DG may allow narrowing the voltage range along feeder, potentially resulting in some loads' reduced power consumption

Fundamentally, voltage regulation is a solvable problem, regardless of the level of DG penetration. However, it may not be possible to regulate voltage properly on a given distribution feeder with existing voltage regulation equipment if substantial DG is added. Thus a high level of DG may necessitate upgrading voltage regulation capabilities, possibly at significant cost.

Research is needed to determine the best and most cost-effective ways to provide voltage regulation, where utility distribution system equipment and DG complement each other.

Needed:

- Detailed modeling of voltage profiles and simulated operation of diverse distribution circuits with high DG penetration
- Collaborative study of empirical performance data from existing high-DG circuits
- Economic analysis of enhanced voltage regulation and monitoring capabilities that would need to be added to distribution feeders to facilitate higher DG penetration
- Simulation and economic analysis of potential VAR support benefits

These needs apply to Action Areas I and III: System Operation; System Design and Analysis.

3.2.4 Background: Circuit Protection

Legacy power distribution systems generally have a radial design, meaning power flows in only one direction: outward from substations toward customers. The "outward" or "downstream" direction of power flow is intuitive on a diagram; on location, it can be defined in terms of the voltage drop (i.e., power flows from higher to lower voltage).

If distributed generation exceeds load in its vicinity at any one moment, power may flow in the opposite direction, or "upstream" on the distribution circuit. To date, interconnection standards are written with the intention to prevent such "upstream" power flow. Figure 14 illustrates a radial distribution system with DG.

The function of circuit protection is to interrupt power flow in case of a fault, i.e. a dangerous electrical contact between wires, ground, trees or animals that results in an abnormal current (fault current). Protective devices include fuses (which simply melt under excessive current), circuit breakers (which are opened by a relay) and reclosers (which are designed to re-establish contact if the fault has gone away).

Figure 14: Radial Distribution System Layout

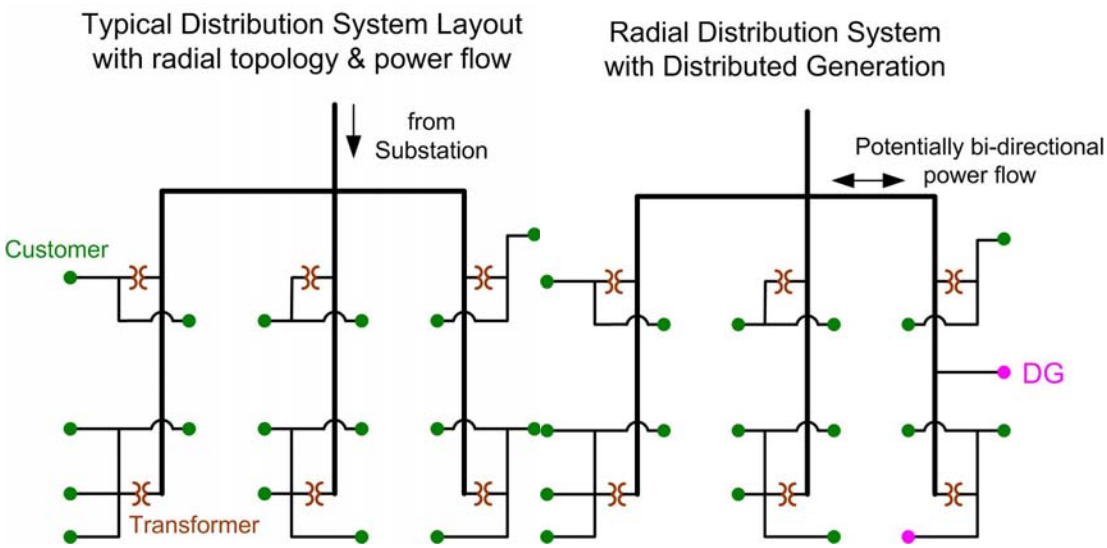

Figure 15: Protection Zones

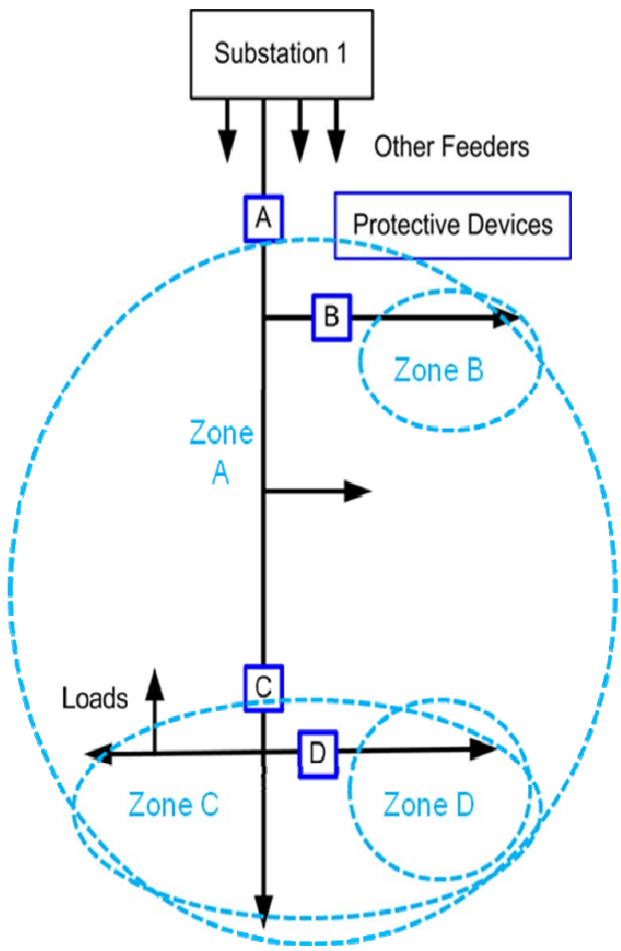

In order to minimally interrupt electric service, protection is coordinated so that only the device closest to a fault will actuate. To accomplish this, protection coordination involves matching

response times of different devices at specific fault currents, and assigning "protection zones" of responsibility to each. This coordination is dramatically facilitated by a radial design with one-way power flow. Figure 15 illustrates nested protection zones on a radial feeder, where each protection device (A through D) is responsible for clearing a fault in the zone "downstream" from it.

There are a variety of alternative layouts for distribution systems that allow for some redundancy to increase service reliability; these include looped and selective systems in which a given customer could be supplied from different sources or directions. Switching the configuration is usually done on a temporary basis on a time scale of hours (for example, to work around a local outage).

Importantly, while there may exist loops, these include open switches so that at any given time, the system is operated with a strictly radial topology. Again, this preserves the protection logic.

The exception is a networked system, where redundant supply is always present. Networks are more complicated to protect and require special circuit breakers called "network protectors" to prevent circulating or reverse power flow. If connected within such a networked system, DG is automatically prevented from backfeeding into the grid. Due to their considerable cost, networked distribution systems are common only in dense urban areas with a high concentration of critical loads, such as downtown Sacramento or San Francisco, and account for a small percentage of distribution feeders in California.

3.2.5 Research Needs Related to Circuit Protection

The presence of distributed generation complicates protection coordination in several ways:

- The fault must now be isolated not only from the substation ("upstream") power source, but also from DG
- Until the fault is isolated, DG contributes a fault current that must be modeled and safely managed
- Shifting fault current contributions can compromise the safe functioning of other protective devices: it may delay or prevent their actuation (relay desensitization), and it may increase the energy (I^2t) that needs to be dissipated by each device.[6]

Interconnection standards limit permissible fault current contributions (specifically, no more than 10 percent of total for all DG collectively on a given feeder). The complexity of protection coordination and modeling increases dramatically with increasing number of connected DG units, and innovative protection strategies are likely required to enable higher penetration of DG.

[6] Work by Vadhva et al. (Sacramento State) under POB231-B45 (Task 2) models protection impacts of DG and examines the adequacy of interconnection standards.

One such set of strategies are known as transfer trip schemes (similar to adaptive relaying at the transmission level). Transfer trip schemes involve communication among protective devices, rather than autonomous operation. This means that a device may actuate, or not actuate, based on currents measured elsewhere and on a programmed decision algorithm, rather than solely on what it senses at its own location.

Research needs related to circuit protection center on adapting protection schemes to safely handle power flow from multiple locations within the distribution system.

Needed:

- Modeling of fault scenarios in diverse distribution circuits with high DG penetration to specify constraint parameters for safe performance
- Collaborative study of empirical performance data from existing high-DG circuits
- Continuing evaluation of interconnection standards to ensure consistency with policy goals and technological capabilities of DG equipment
- Study of alternative protection methods, including transfer trip schemes that would facilitate high DG penetration.

These needs apply to Action Areas I, II and III: System Operation; Standards, Rules & Procedures; System Design and Analysis.

3.2.6 Background: Islanding

The concept of a power island is illustrated in Figure 16.

Figure 16: Power Island

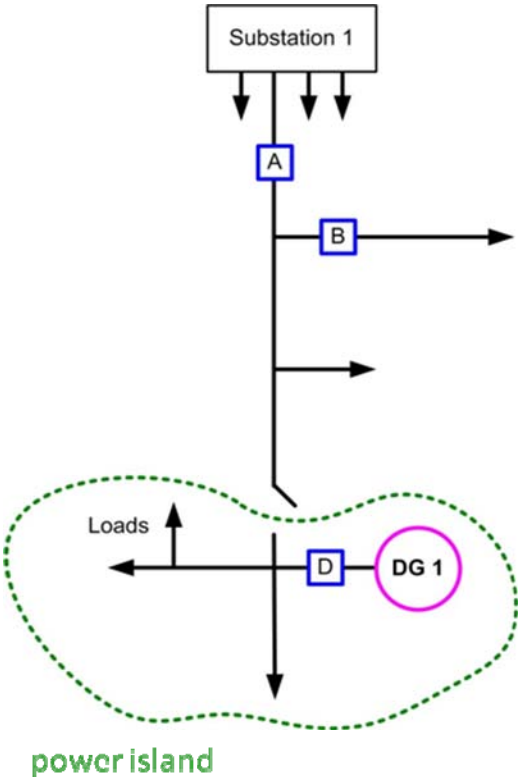

Standard utility operating procedures in the United States do not ordinarily permit power islands. The main exception is the restoration of service after an outage, during which islanded portions of the grid are re-connected in a systematic, sequential process; in this case, each island is controlled by one or larger, utility-operated generators.

Interconnection rules for distributed generation aim to prevent unintentional islanding. To this end, they require that DG shall disconnect in response to disturbances, such as voltage or frequency excursions, that might be precursors to an event that will isolate the distribution circuit with DG from its substation source. Disconnecting the DG is intended to assure that if the distribution circuit becomes isolated, it will not be energized.

This policy is based on several risks entailed by power islands:

- **Safety of utility crews:**

  If lines are unexpectedly energized by DG, they may pose an electrocution hazard, especially to line workers sent to repair the cause of the interruption. It is important to keep in mind that even though a small DG facility such as a rooftop solar array has limited capacity to provide power, it would still energize the primary distribution line

with high voltage through its transformer connection, and is therefore just as potentially lethal as any larger power source.

- **Power quality:**

  DG may be unable to maintain local voltage and frequency within desired or legally mandated parameters for other customers on its power island, especially without provisions for matching generation to local load. Voltage and frequency departures may cause property damage for which the utility could be held liable, although it would have no control over DG and power quality on the island.

- **Re-synchronization:**

  When energized power islands are connected to each other, the frequency and phase of the a.c. cycle must match precisely (i.e., be synchronized), or else generators could be severely damaged. DG may lack the capability to synchronize its output with the grid upon re-connection of an island.

3.2.7 Research Needs Related to Islanding

In view of the above risks, most experts agree that specifications for the behavior of DG should be sufficiently restrictive to prevent unintentional islanding. Interconnection rules aim to do this by requiring DG to disconnect within a particular time frame in response to a voltage or frequency deviation of particular magnitude, disconnecting more quickly (down to 0.16 seconds, or 10 cycles) in response to a larger deviation. At the same time, however, specifications should not be too conservative to prevent DG from supporting power quality and reliability when it is most needed.

For example, if the voltage on the distribution circuit sags below a specified value, disconnecting DG would assure that the circuit is de-energized if and when it does fail completely, but would also increase the probability of such a failure occurring in the first place. By contrast, keeping DG online during the voltage sag ("low-voltage ride-through") and thus providing generation at a critical time and location would tend to help stabilize voltage and reduce the chances of actual service interruptions.

There is no broad consensus among experts at this time about how best to reconcile the competing goals of minimizing the probability of unintentional islanding, while also maximizing the beneficial contribution from DG to distribution circuits.

As for the possibility of permitting DG to intentionally support power islands on portions of the utility distribution system, there is a lack of knowledge and empirical data concerning how power quality might be safely and effectively controlled by different types of DG, and what requirements and procedures would have to be in place to assure the safe creation and re-connection of islands. Because of these uncertainties, the subject of islanding seems likely to remain somewhat controversial for some time.

Needed:

- Modeling of DG behavior at high local penetrations, including

  - prevention of unintentional islanding
  - DG control capabilities during intentional islanding

- Collaboration across utility and DG industries to facilitate DG performance standardization, reliability and trust. This means that utilities can depend on DG equipment to perform according to expectations during critical times and abnormal conditions on the distribution system, the handling of which is ultimately the utility's responsibility.

- Ongoing examination of interconnection standards, to assure they reflect
  - policy priorities
  - state of technological development for DG and distribution systems

These needs apply to Action Areas I and II: System Operation; Standards, Rules & Procedures.

3.2.8 Microgrids

In the long run, intentional islanding capabilities – with appropriate safety and power quality control – may be strategically desirable for reliability goals, security and optimal resource utilization. Such hypothetical power islands are related to but distinct from the concept of microgrids, in that they would be scaled up to the primary distribution system rather than limited to a single customer's premises.

A microgrid is a power island on customer premises, intermittently connected to the distribution system behind a point of common coupling (PCC) that may comprise a diversity of DG resources, energy storage, loads, and control infrastructure.

Three key features of a microgrid are

- **Design around total system energy requirements:**

For example, combined heat and power can be strategically used to meet thermal end uses on location; day-peaking generation such as PV can be sized to meet day-peaking loads.

Figure 17: Microgrid

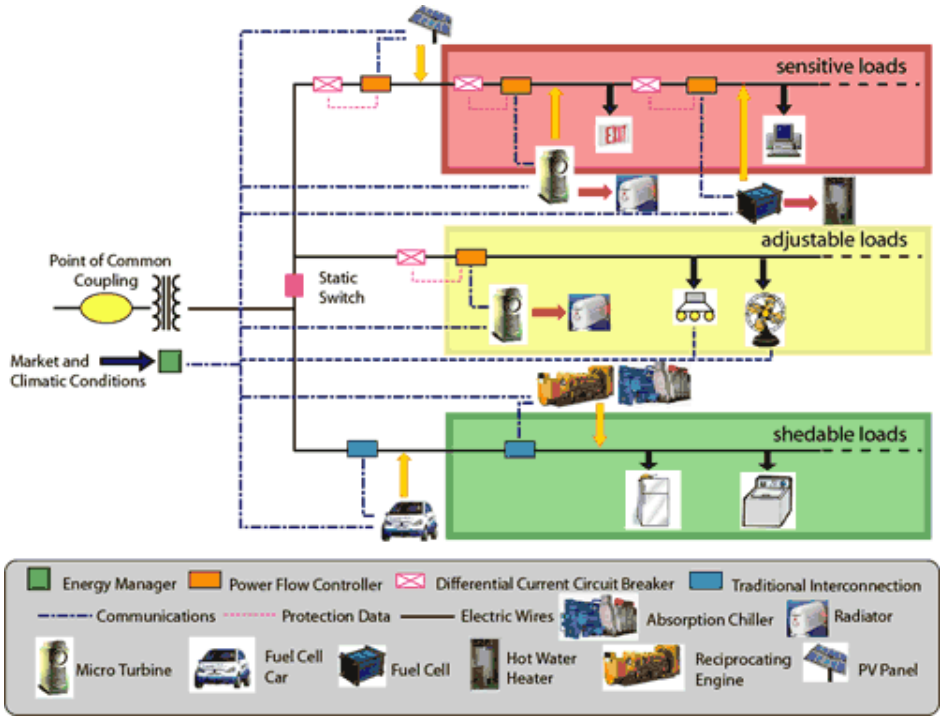

Source: CERTS, Lawrence Berkeley National Laboratory

Depending on their importance, time preference or sensitivity to power quality, different loads may be assigned to different primary and/or back-up generation sources, storage, or uninterruptible power supplies (UPS). A crucial concept is that the expense of providing highly reliable, high-quality power (i.e., very tightly controlled voltage and frequency) can be focused on those loads where it really matters to the end user (or life of the appliance), at considerable overall economic savings. However, the provision of heterogeneous power quality and reliability (PQR) requires a strategic decision of what service level is desired for each load, as well as the technical capability to discriminate among connected loads and perform appropriate switching operations.

- **Presentation to the macrogrid as a single controlled entity:**

  At the point of common coupling, the microgrid appears to the utility distribution system simply as a time-varying load. The complexity and information management involved in coordinating generation, storage and loads is thus contained within the local boundaries of the microgrid.

Note that the concepts of microgrids and power islands differ profoundly in terms of

- ownership
- legal responsibility (i.e. for safety and power quality)
- legality of power transfers (i.e., selling power to loads behind other meters)

- regulatory jurisdiction
- investment incentives

Nevertheless, microgrids and hypothetical power islands on distribution systems involve many of the same fundamental technical issues. In the long run, the increased application of the microgrid concept, possibly at a higher level in distribution systems, may offer a means for integrating renewable DG at high penetration levels, while managing coordination issues and optimizing resource utilization locally.

Research Needs:

- Empirical performance validation of microgrids
- Study of the implications of applying microgrid concepts to higher levels of distribution circuits, including
    - time-varying connectivity
    - heterogeneous power quality and reliability
    - local coordination of resources and end-uses

  to strategically optimize local benefits of distributed renewable generation
- Study of interactions among multiple microgrids

These needs apply to Action Areas I, II, III and IV: System Operation; Standards, Rules & Procedures; System Design & Analysis; Incentives & Public Engagement.

CHAPTER 4:
Overarching Coordination Issues

Refinement of both spatial and temporal coordination – in other words, "smartness" – demands a substantial increase of information flow among various components on the electric grid. This information flow has implications for system control strategies, including the role of human operators.

Some of this coordination is specifically associated with renewable and distributed resources, requiring increased information volume for

- mitigating intermittence of renewable resources
- accommodating siting constraints for renewable and distributed generation
- maximizing resource benefits locally and systemically

Increased information volume is also implied by developments other than the increased use of renewables, including

- economic optimization (e.g. power markets, advanced metering, demand response)
- desire for enhanced grid reliability (e.g. distribution automation)

An important general question is, given the goal of refined coordination with high information volume, how does one best design and manage the operational logic flow?

The notion of logic flow in grid operation is one way to situate the various coordination challenges arising with "smart grids." This logic flow can be visualized in terms of five distinct aspects, as illustrated by the graphic in Figure 18.

Figure 18: Logic Flow

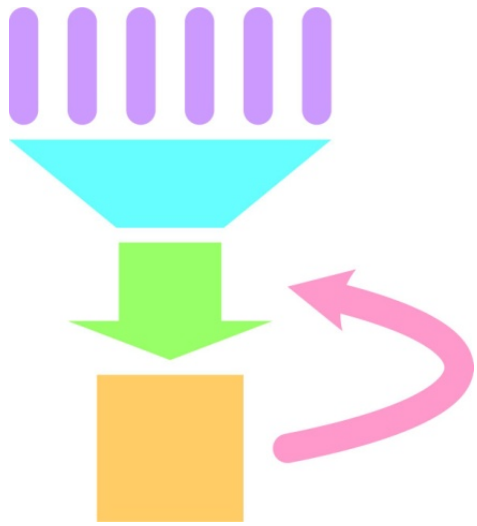

In summary, the five aspects of logic flow are

1. Critical Points
2. Information Aggregation
3. Actionable Items
4. Locus of Control
5. Failure Correction

1. Critical Points

The term 'critical points' here is taken to mean the points from which vital data are collected: for example, the customer meter, point of common coupling (PCC), generator bus, substation, or transformer. It is fairly well understood what the critical points are in electric power systems, i.e. the nodes at which one would like to know voltage, current, or phase angle. What may not be obvious is how to prioritize critical points for retrofit instrumentation, how to choose the most appropriate sensing instrumentation, and how to perform installations most economically.

Needed:

- Ongoing technological R&D for better and cheaper instrumentation
- Prioritization of critical points for instrumentation (for example, phasor measurement units)
- Evaluation of customers' priorities, where applicable, to align data collection approach and means

2. Information Aggregation

Information aggregation refers to how data are summarized in space and time, and where data are stored and analyzed. For example, a large number of individual measurements might be aggregated to represent total feeder load or generation from distributed resources over a particular time interval. In another example, a large number of data such as phasor measurements may be collected over time, but only the abnormal values are of interest, so these values need to be somehow selected and isolated for observation and analysis.

Problematic issues in the context of information aggregation include the following:

- How much data volume is manageable for both operators and communications systems?
- What level of resolution needs to be preserved?
- What data must be monitored continuously, and what opportunities exist to filter data by exceptional events?
- How can information best be presented to operators to support situational awareness?

Needed:

- Modeling of system operation, especially at the distribution level
- Study of situational awareness requirements for distribution operators
- Continuing development of visualization tools for operators, including comparative analysis of digital and analog formats

3. Actionable Items

Once data have been selected and aggregated into manageable batches, they must be translated or somehow used to frame and inform action items for operators. For example, we might ask what local information goes into an operator's decision to switch a particular feeder section, or to dispatch demand response, generation or storage. Operating procedures are necessarily based on the particular sets of information and control tools available to operators. The introduction of significant volumes of new data as well as potential control capabilities on more refined temporal and spatial scales also forces decisions about how this information is to be used, strategically and practically.

Issues concerning actionable items include the following:

- What new tasks and responsibilities are created for grid operators, especially distribution operators, by distributed resources?
- How are these tasks defined?
- What control actions may be taken by parties other than utility operators?

Needed:

- Modeling of distribution circuit operation with high penetration of diverse distributed resources, including evaluation of control strategies.

4. Locus of Control

A question related to the definition of action items is who, exactly, is taking the action. With large amounts of data to be evaluated and many decisions to be made in potentially a short time frame, it is natural to surmise that some set of decisions would be made and actions initiated by automated systems of some sort, whether they be open-loop with human oversight or closed-loop "expert systems" that are assigned domains of responsibility. Such domains may range from small to substantial: for example, automation may mean a load thermostat that automatically resets itself in response to an input (e.g. price or demand response signal); distributed storage that charges or discharges in response to a schedule, signal or measurement of circuit conditions; or it could mean entire distribution feeders being switched automatically.

Fundamental questions about the locus of control include:

- What operating actions can or should be automated?
- What are constraints and opportunities for "distributed intelligence," i.e. local decision-making based on local data that does not require action from a centrally located operator?
- Can operators trust processes outside their control to perform as expected? How is confidence established?

Needed:

- Modeling of operation and control strategies for distribution circuits with high penetration of diverse distributed resources

- Study of situational awareness requirements for distribution operators, specifically related to high data volumes and interaction with automated systems

5. Failure Correction

Finally, it would be naive to expect any substantial innovation in a technical system as complex as the electric grid to proceed without setbacks, or for an updated and improved system to operate henceforth without failures. Rather than wishing away mistakes and untoward events, the crucial question is what corrective feedback mechanisms are available, not if but when failures do occur. This includes, for example, contingency plans in response to failures of hardware, communications or control algorithms, cyber-security breach, or any other unexpected behavior on the part of a system component, human or machine.

A higher degree of spatial and temporal resolution in coordinating electric grids – more information, more decisions, and more actions – means many more opportunities for intervention and correction, but first it means many more opportunities for things to go wrong. From a design standpoint, it is useful to think about "graceful failures," which may be characterized as those failures that are

- contained: their propagation is self-limited
- correctable: operators retain situational awareness and tools to intervene
- enable learning: processes are transparent, information is accessible

Graceful failure is one aspect of a system's robustness, a property sometimes defined as invariance of a system's functionality with respect to assumptions made during its design. Short of knowing all the right assumptions to make in the design and implementation of a "smart grid," a promising strategy for creating a robust system would be to consider how the grid will behave in case our assumptions about any given system aspect turn out to be wrong (for example, what happens if communications are lost?).

Needed:

- Explicit consideration of diverse failure scenarios in modeling and simulation of new technologies and algorithms
- Data acquisition and forensic capability to analyze events
- Prevention of clogged data channels during anomalies
- Flexibility of implementation plans to account for failures

In summary, an overarching challenge of "smart grid" coordination lies in the management of unprecedented amounts of data, associated with an unprecedented number of decisions and control actions at various levels throughout the grid.

System design and logic flow should

- support operators' situational awareness

- support operators' analysis, decision, action and resolution of system anomalies
- support flexible operations
- tend to make the system robust with respect to departures from designers' assumptions

The five levels of logic flow presented here provide a reference basis or checklist for research on any particular aspect of system coordination.

CHAPTER 5: Conclusion

The effective integration of large amounts of new resources, including distributed and renewable resources, hinges on the ability to coordinate the electric grid in space and time on a wide range of scales. The capability to perform such coordination, independent of any particular technology used to accomplish it, can be taken to define a "smart grid."

Ultimately, "smart" coordination of the grid should serve to

- mitigate technical difficulties associated with renewable resources, thereby enabling California to meet its policy goals for a renewable portfolio
- maximize beneficial functions renewable generation can perform toward supporting grid stability and reliability
- maximize benefits to California ratepayers by enabling use of the most economic technologies, design and operating approaches.

This white paper outlines substantial challenges on the way to meeting the above goals. It also suggests that the problems associated with integrating renewable resources at high penetration levels, while considerable in number and significance, ought to be tractable in principle. In other words, it seems plausible that the technical difficulties around employing large amounts of intermittent and distributed generation can be overcome, and, moreover, that the investment in doing so coincides with the strategic development of a "smart grid" that is desirable or even necessary for reasons other than reducing carbon emissions – namely, economy and reliability of electric service.

However, much work lies between the status quo and a system with 33 percent of intermittent renewables. Due to the complex nature of the grid, and because the refinement of temporal and spatial coordination represents a profound departure from the capabilities of our legacy system, any "smart grid" development will require time for learning, and will need to draw on empirical performance data as they become available. Time is of the essence, therefore, in answering the many foundational questions about how to design and evaluate new system capabilities, how to re-write standards and procedures accordingly, how to incentivize the most constructive behavior from market participants, and how to support operators in their efforts to keep the grid working reliably in the face of these transitions. With all the research needs detailed in this white paper, the hope is that questions addressed early may help prevent costly mistakes and delays later on. The more aggressively these research efforts are pursued, the more likely California will be able to meet its 2020 goals for renewable resource integration.

REFERENCES

Brown, Merwin et al. *Transmission Technology Research for Renewable Integration,* California Institute for Energy and Environment, University of California, September 2008. http://uc-ciee.org/piertrans/documents/TransmissionTechnologyResearchforRenewablesFinalReport.pdf

Eto, Joe et al. *Real Time Grid Reliability Management.* California Energy Commission, PIER Transmission Research Program, 2008. CEC-500-2008-049.

Lasseter, Robert et al. *Integration of Distributed Energy Resources: The CERTS MicroGrid Concept*. Consortium for Electric Reliability Technology Solutions, Lawrence Berkeley National Laboratory, April 2002. http://certs.lbl.gov/pdf/50829-app.pdf

National Renewable Energy Laboratory. *Western Wind and Solar Integration Study*. May 2010. http://wind.nrel.gov/public/WWIS/

Power Systems Engineering Research Center. *U.S. Energy Infrastructure Investment: Large-Scale Integrated Smart Grid Solutions with High Penetration of Renewable Resources, Dispersed Generation, and Customer Participation.* PSERC White Paper, Publication 09-01, March 2009.

Price, Snuller et al. *Meeting California's Long-Term Greenhouse Gas Reduction Goals*. Energy and Environmental Economics, Inc. San Francisco, CA, November 2009.

Vittal, Vijay, "The Impact of Renewable Resources on the Performance and Reliability of the Electricity Grid." National Academy of Engineering Publications, Vol. 40 No. 1, March 2010. http://www.nae.edu/Publications/TheBridge/Archives/TheElectricityGrid/18587.aspx