Energy Research and Development Division
FINAL PROJECT REPORT

MICROGRID DEMONSTRATION PROJECT

Appendices A-E

Prepared for: California Energy Commission
Prepared by: Sacramento Municipal Utility District

DECEMBER 2012
CEC-500-2014-045-0AP

PREPARED BY:

Primary Author(s):
Mark Rawson
Jeff Berkheimer

Sacramento Municipal Utility District
6201 S Street
Sacramento, California 95817-1899

Contract Number: 500-08-009

Prepared for:

California Energy Commission

Steve Ghadiri
Contract Manager

Fernando Pina
Office Manager
Energy Systems Research Office

Laurie ten Hope
Deputy Director
ENERGY RESEARCH AND DEVELOPMENT DIVISION

Robert P. Oglesby
Executive Director

DISCLAIMER

This report was prepared as the result of work sponsored by the California Energy Commission. It does not necessarily represent the views of the Energy Commission, its employees or the State of California. The Energy Commission, the State of California, its employees, contractors and subcontractors make no warranty, express or implied, and assume no legal liability for the information in this report; nor does any party represent that the uses of this information will not infringe upon privately owned rights. This report has not been approved or disapproved by the California Energy Commission nor has the California Energy Commission passed upon the accuracy or adequacy of the information in this report.

ACKNOWLEDGEMENTS

The authors wish to thank the Public Interest Energy Research Program for their support of this research. They would also like to thank the Consortium for Electric Reliability Technology Solutions and the following individuals for their invaluable help in performing the project work and preparing this document.

DE Solutions, Inc. .....Keith Davidson

Energy Tech Consultants .....Rick Kuchenig

Integrated CHP Systems Corp. .....Gearoid Foley

National Renewable Energy Laboratory .....Ben Kroposki and Mariko Shirazi

Peters Engineering .....Jan Black

Sacramento Municipal Utility District .....Jim Dayringer and Jim Ellering
University of Wisconsin-Madison Robert Lasseter

PREFACE

The California Energy Commission Energy Research and Development Division supports public interest energy research and development that will help improve the quality of life in California by bringing environmentally safe, affordable, and reliable energy services and products to the marketplace.

The Energy Research and Development Division conducts public interest research, development, and demonstration (RD&D) projects to benefit California.

The Energy Research and Development Division strives to conduct the most promising public interest energy research by partnering with RD&D entities, including individuals, businesses, utilities, and public or private research institutions.

Energy Research and Development Division funding efforts are focused on the following RD&D program areas:

- Buildings End-Use Energy Efficiency
- Energy Innovations Small Grants
- Energy-Related Environmental Research
- Energy Systems Integration
- Environmentally Preferred Advanced Generation
- Industrial/Agricultural/Water End-Use Energy Efficiency
- Renewable Energy Technologies
- Transportation

Microgrid Demonstration Project is the final report for the Microgrid Demonstration Project (contract number 500-08-009) conducted by Sacramento Municipal Utility District. The information from this project contributes to Energy Research and Development Division's Energy Systems Integration Program.

For more information about the Energy Research and Development Division, please visit the Energy Commission's website at www.energy.ca.gov/research/ or contact the Energy Commission at 916-327-1551.

ABSTRACT

A micro grid is a network of generators linked together to serve buildings with electricity; some systems also provide heating and cooling. One advantage of a micro grid is reliability. A micro grid can operate while connected to the main utility grid and it can immediately disconnect if the power goes out. The microgrid still provides some electricity, heat, and cooling even when isolated from the utility. A microgrid can also offer customers higher quality power. The system can disconnect whenever the main grid's power quality threatens the stable operation of sensitive equipment such as computers and other electronics.

This research demonstrated a microgrid at the Sacramento Municipal Utility District. The project involved the design, construction, and demonstration of a microgrid based on combined heat and power technology. The microgrid was integrated with the Sacramento Municipal Utility District's central heating and cooling equipment, including a chilled-water storage tank. A fast-response static switch enabled the microgrid to isolate itself from the grid without electrical disturbances on either side and then reconnect when the utility restored high-quality power. The project also included plans for commissioning the microgrid, monitoring its operation, analyzing the market for similar systems and disseminating research results.

Researchers planned to document any abnormal events and corrective actions taken once the microgrid is operating, as well as to explain what the data say about the microgrid's performance. Researchers also intended to develop a plan to transfer the microgrid technology to key decision-makers and the general public, and to implement a focused marketing program to educate customers in all market sectors about the benefits of combined heat and power.

Keywords: microgrid, combined heat and power, distributed energy resources, energy

Please use the following citation for this report:

Rawson, Mark; Jeff Berkheimer. (Sacramento Municipal Utility District). 2012. ***Microgrid Demonstration Project.*** California Energy Commission. Publication number: CEC-500-2014-045.

TABLE OF CONTENTS

Acknowledgements i

PREFACE ii

ABSTRACT iii

TABLE OF CONTENTS iv

APPENDIX A: A-1

APPENDIX B: B-1

APPENDIX C: C-1

APPENDIX D: D-1

APPENDIX E: E-1

APPENDIX A:
Thomas & Betts Smart Switch Documents

Appendix A – Thomas & Betts Smart Switch Documents

SMUD
MICROGRID SMART SWITCH

Drawing Package
September 9, 2010

5900 Eastport Blvd., Bldg. V • Richmond, VA 23231-4453 • T: 804.236.3300 • F: 804.236.4040 • www.cyberex.com

SMUD Microgrid Smart Switch

Submittal

TABLE OF CONTENTS

Tab 1 ..... Bill of Material

Tab 2 ..... Drawings

Tab 3 ..... Alarm List

Tab 4 ..... Spare Parts List

Tab 5 ..... Start-Up Checklist

Tab 6 ..... Warranty

TAB 1 – BILL OF MATERIAL

5900 Eastport Blvd., Bldg. V • Richmond, VA 23231-4453 • T: 804.236.3300 • F: 804.236.4040 • www.cyberex.com

Static Transfer Switch (STS)
Bill of Material

Item	Bill of Material	Qty.
100	**Cyberex Brand, Power Static Transfer Switch (STS)** P/N: **Custom STS / "Smart Switch"** **Rated: 1200 Amps** **Input Voltage: 480V, 3-Phase, 3W+Gnd, 60 Hz** **Output Voltage: 480V, 3-Phase, 3W+Gnd, 60 Hz** (Neutral: Un-Switched) ▸ (1) Input Non-Automatic Switch, Rated: 1200 Amps ▸ (1) Bypass Non-Automatic Switch, Rated: 1200 Amps ▸ (1) Output Non-Automatic Switch, Rated: 1200 Amps ▸ 100 kA withstand **Product Features (Partial List)** ▸ Hockey Puck Style SCR's (Type-II) Architecture ▸ Fiber Optic Control Links ▸ Comprehensive Super Switch3, Metering, Monitoring, Control, and Alarm Package ▸ 40kA TVSS per source ▸ RS 232/485 and TCP/IP Remote Communications with Modbus ▸ Color LCD Display ▸ Bottom Cable Entry/Exit ▸ Color: Cyberex Black ▸ 5 Relay Alarm Contacts ▸ Separate LED Based Mimic Panel ▸	1
200	**Engineered Options** ▸ Custom firmware and controls based on SMUD Microgrid design build specifications (refer to spec review comments for exceptions, deviations and clarficiations) ▸	
	Layout **Dim: 66"W x 34"D x 78"H / Est. Weight 2000 lbs.**	
300	**Site Services (Performed by Factory Field Engineer)** ▸ **Startup Service M-F (8-5 PM)** ▸ **On-Site Commissioning** ▸ **Training**	

Thomas&Betts
Power Solutions

5900 Eastport Boulevard
Richmond, VA 23231
Main Tel: (804) 236-3300
Service: (800) 292-3739
www.cyberex.com

TAB 2 – DRAWINGS

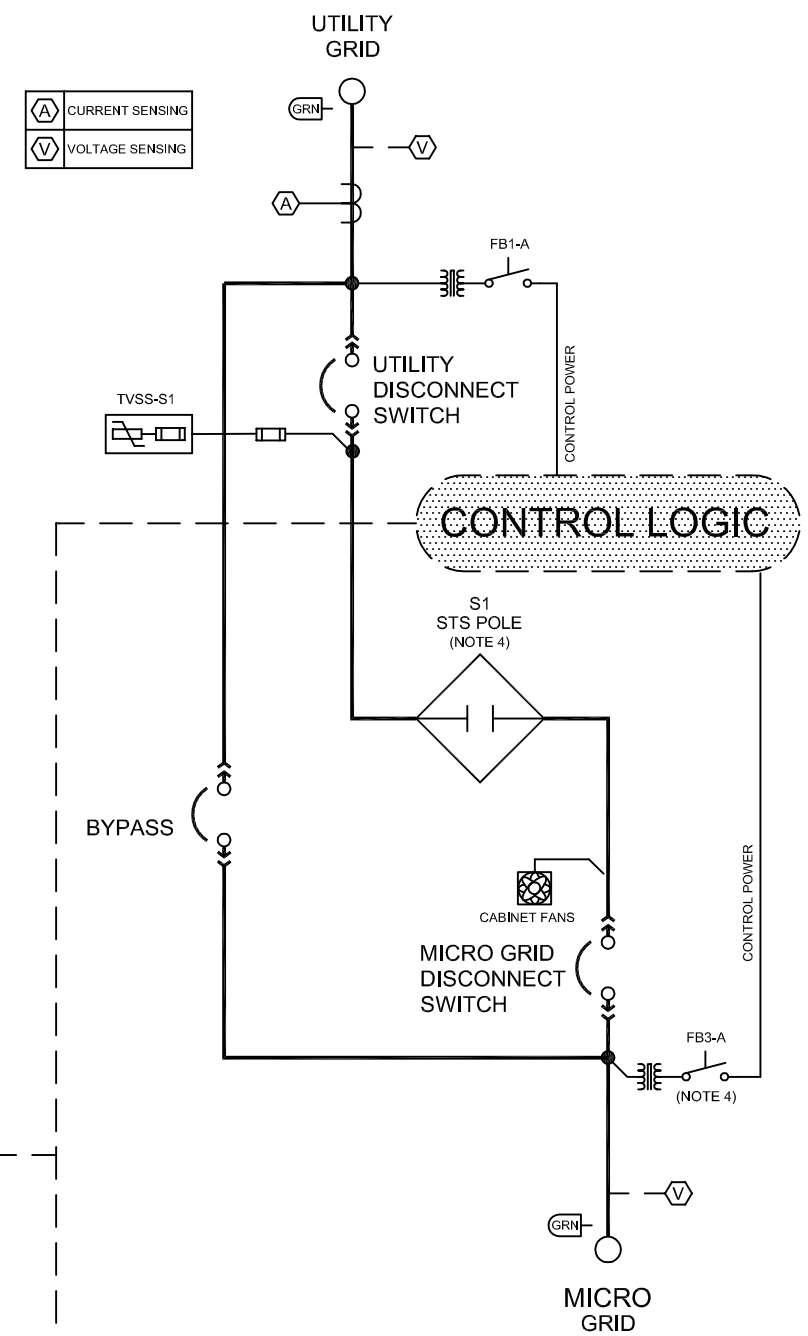

NOTES:

1. PHASE SEQUENCE IS SET-UP TO BE A-B-C.
2. SCR's ARE MONITORED FOR FAILURES, SHORTED AND OPEN (CONTINUITY MONITOR) CONDITIONS ARE ALARMED WITH APPROPRIATE AUTOMATIC ACTION.
3. WHEN SOURCE NEUTRALS ARE BROUGHT TO STS, CONNECTION TO OUTPUT IS SOLID (UN-SWITCHED).
4. FUSE (FB3-A) POWERS THE LOGIC WHILE IN BYPASS. FOLLOW OPERATING INSTRUCTIONS FULLY.
5. OPTIONAL LOCAL "EMERGENCY POWER OFF" PUSHBUTTON WILL SHUNT TRIP SOURCE INPUT AND BYPASS BREAKERS.
6. ALARM RELAY CONTACTS RATED 2 AMPS @ 120 VAC OR 28 VDC. CFA = CLOSED FOR ALARM, OFA = OPEN FOR ALARM
7. SWITCHING TIME FOR CLOSE OR OPEN WILL BE WITHIN THE ITIC CURVE (< 1 CYCLE) FOR ALL CASES.
8. CONTROL FUNCTIONS WILL COMPLY WITH IEEE 1547 WITH RESPECT TO OVER/UNDER VOLTAGE, OVER/UNDER FREQUENCY, SYNCH CHECK, DIRECTIONAL POWER, RECLOSE DELAY, AND UNINTENTIONAL ISLANDING.

USER INTERFACE BOARD (PHYSICAL LAYOUT)

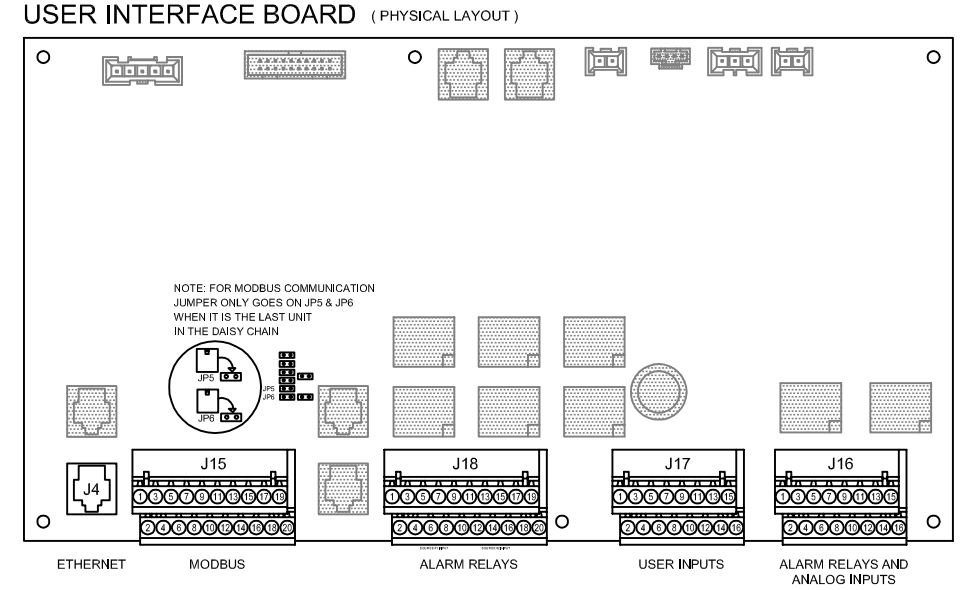

USER INTERFACE BOARD

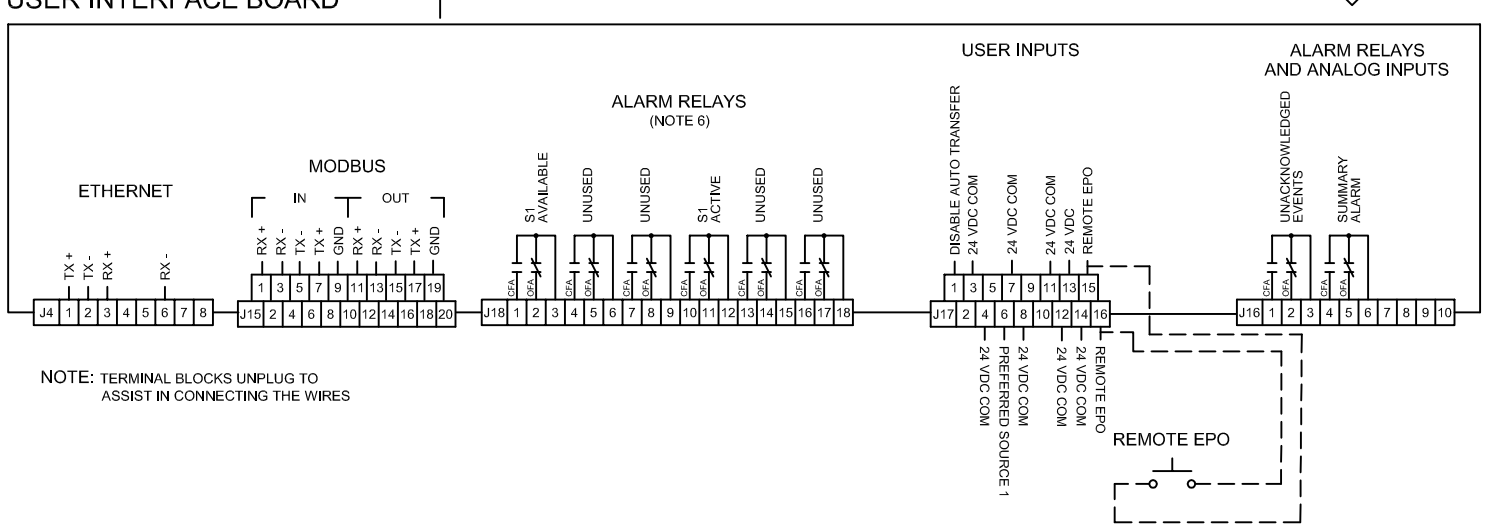

NOTE: TERMINAL BLOCKS UNPLUG TO ASSIST IN CONNECTING THE WIRES

ISSUE	ECN#	DESCRIPTION	BY	APPVD	DATE
C		REVISED TITLE BLOCK TO REFLECT NEW REQUIREMENTS	GBY	-	09/03/10
B		ADDED TITLEBLOCK INFO	GBY	-	06/22/10
A	-	RELEASED D65205-2 'D'	JHB	JB	18 NOV 09

CYBEREX.

GTX-12002-316-480-3N100-XLI0XX
SMUD MICRO-GRID 1200A SWITCH
ONE LINE DIAGRAM

JOB : J022740	SCALE N/A	DRWN: JHB	CHKD: JB
ORDER : 49512		APPVD: JB	DATE: 18 NOV 09

Thomas&Betts Power Solutions

DWG, SIZE, NUMBER B0049512-1-1 C

SHEET 1 OF 1

This document is the property of Thomas & Betts Power Solutions, LLC. Under copyright law, distribution and reproduction of this document, in whole or in part, is prohibited without prior written permission from Thomas & Betts Power Solutions, LLC.

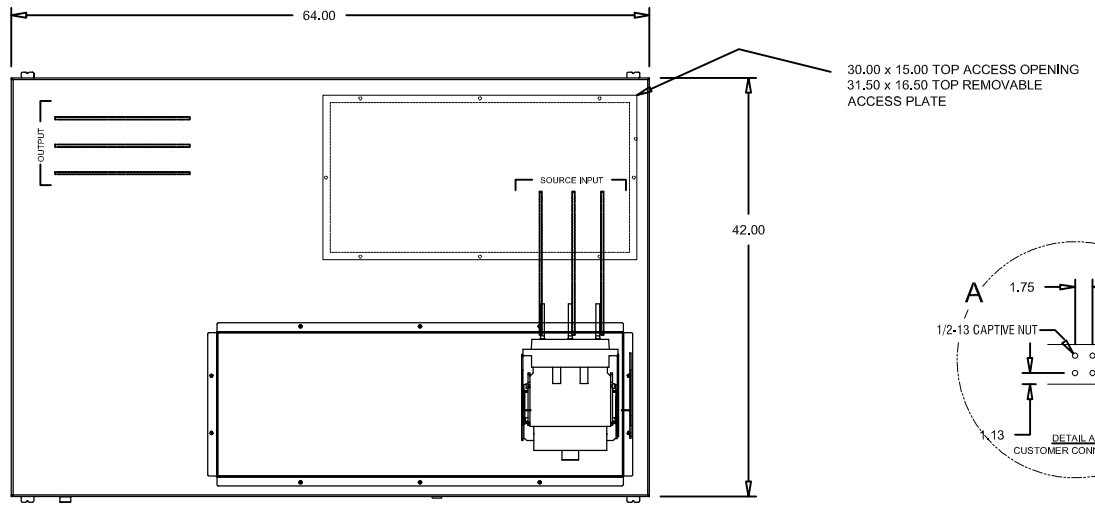

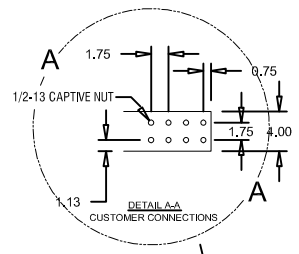

NOTES:

1. ALL DIMENSIONS EXPRESSED IN INCHES.
2. AMBIENT TEMPERATURE RANGE: 0° TO 40°C.
3. SYSTEM COOLING REQUIREMENTS: FORCED AIR COOLED
4. SYSTEM WEIGHT: 1800 LBS -ESTIMATE
5. OPERATIONAL ACCESS VIA FRONT & LEFT DOORS. MAINTENANCE AND CONNECTION ACCESS VIA FRONT DOOR AND REMOVABLE SIDE PANEL OR FRONT AND REAR DOORS (DEPENDING ON ACCESS - SEE NOTE 6).
6. RECOMMENDED MINIMUM CLEARANCES:
   FRONT = 36.00
   REAR = 4.00 IF RIGHT & LEFT SIDE ACCESS AVAILABLE.
   36.00 IF NO RIGHT & LEFT SIDE ACCESS AVAILABLE.
   LEFT SIDE = 36.00 IF NO REAR ACCESS AVAILABLE.
   RIGHT SIDE = 36.00 IF NO REAR ACCESS AVAILABLE.
   TOP = 20.00
7. SYSTEM MUST HAVE ALL PANELS AND DOORS INSTALLED FOR PROPER OPERATION.
8. PAINT : MIDNIGHT BLACK

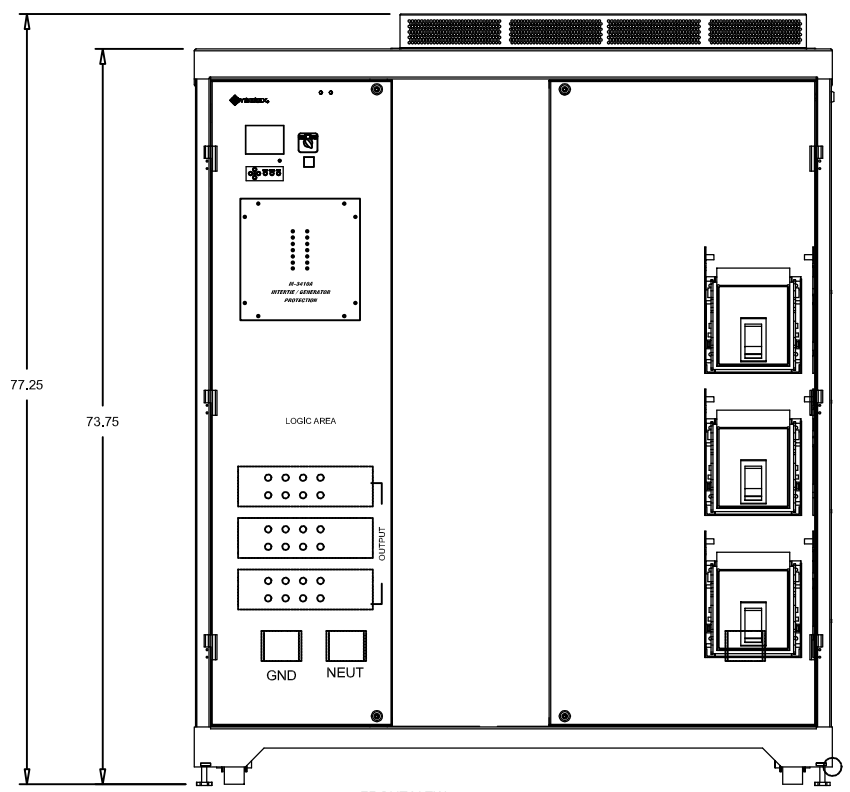

FRONT VIEW

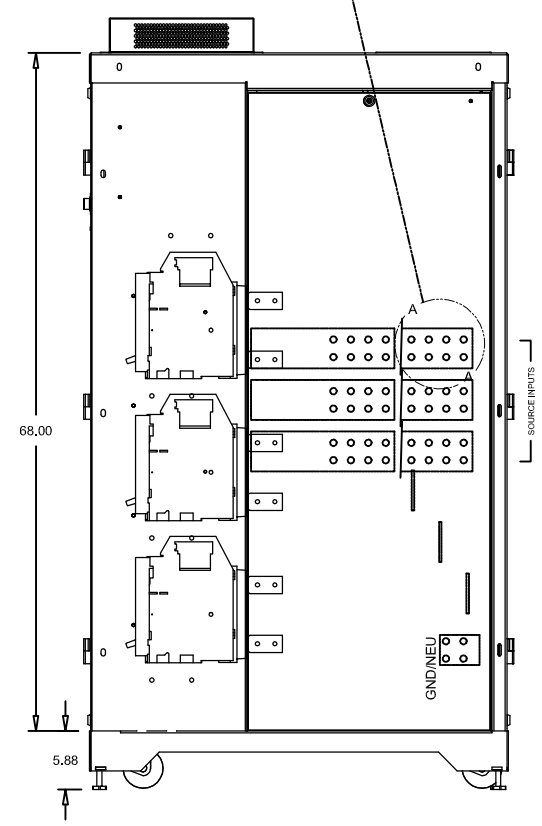

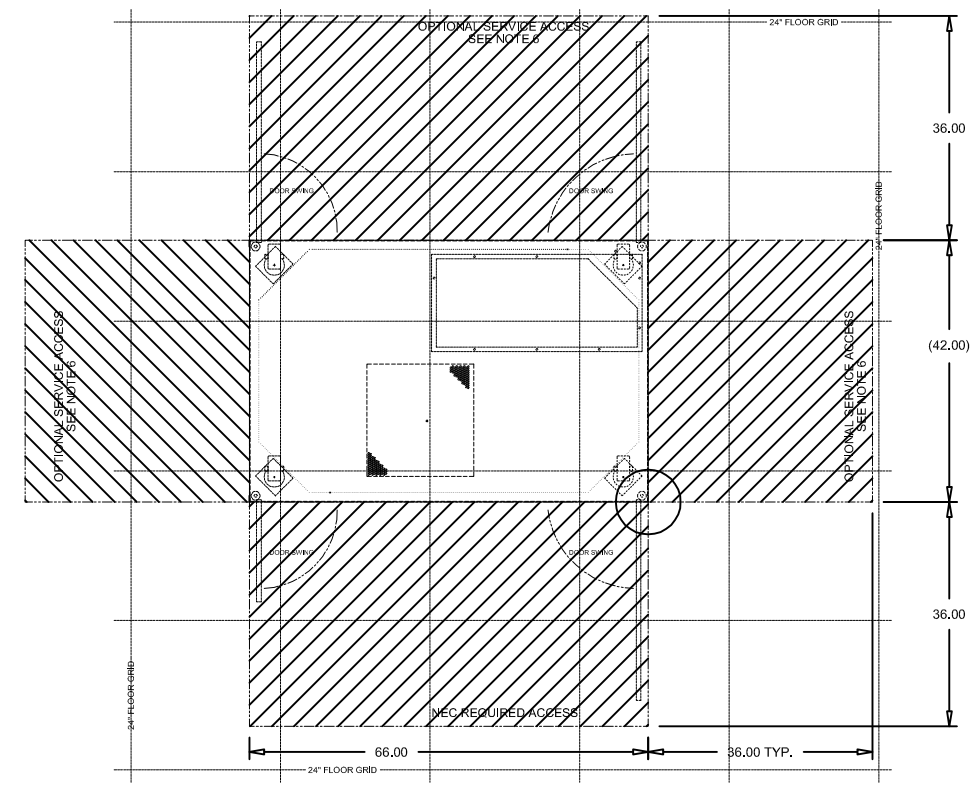

FLOOR LAYOUT / ACCESS REQUIREMENTS

PLAN VIEW

SCALE: 5/8

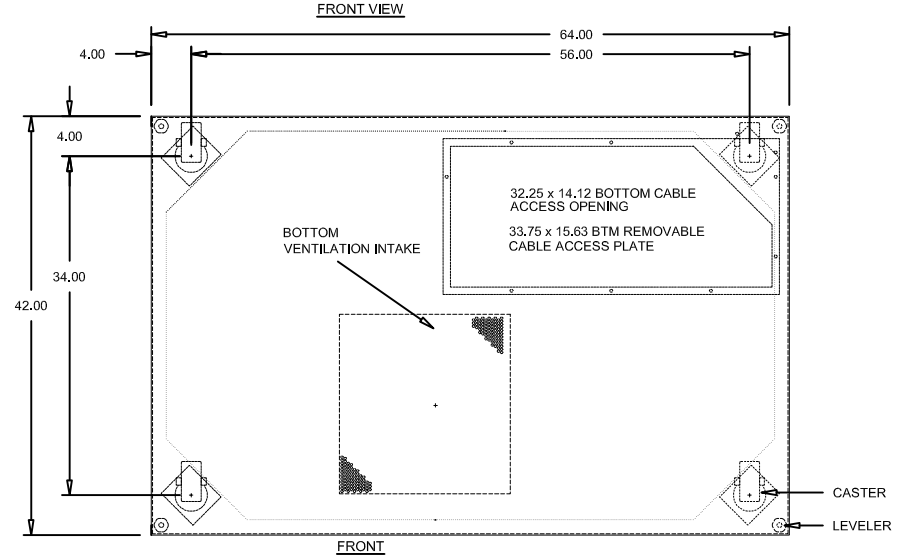

FRONT

PLAN VIEW

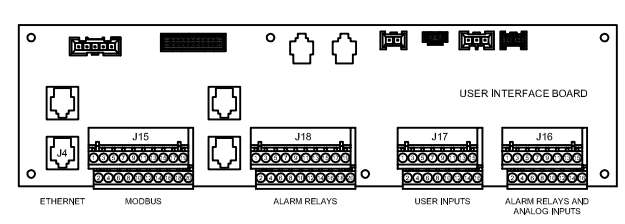

USER INTERFACE CONNECTIONS

ISSUE	DESCRIPTION	BY	APPVD	DATE
B	REMOVED EXTRA INPUT AND BUSS WORK	GBY	GBY	09/07/10
A	PRELIMINARY ISSUE	GBY	GBY	09/03/10

CYBEREX.

GTX-12002-316-480-3N100-XLI0XX
SMUD MICRO-GRID 1200A SWITCH
OUTLINE DIAGRAM

JOB : J022740	SCALE	DRWN: GBY	CHKD: GBY
ORDER : 49512	1:12	APPVD: GBY	DATE: 09/03/10

Thomas&Betts
Power Solutions

DWG, SIZE, NUMBER
B0049512-1-2 B

SHEET 1 OF 1

This document is the property of T&B Power Solutions . Under copyright law, distribution and reproduction of this document, in whole or in part, is prohibited without prior written permission from T&B Power Solutions

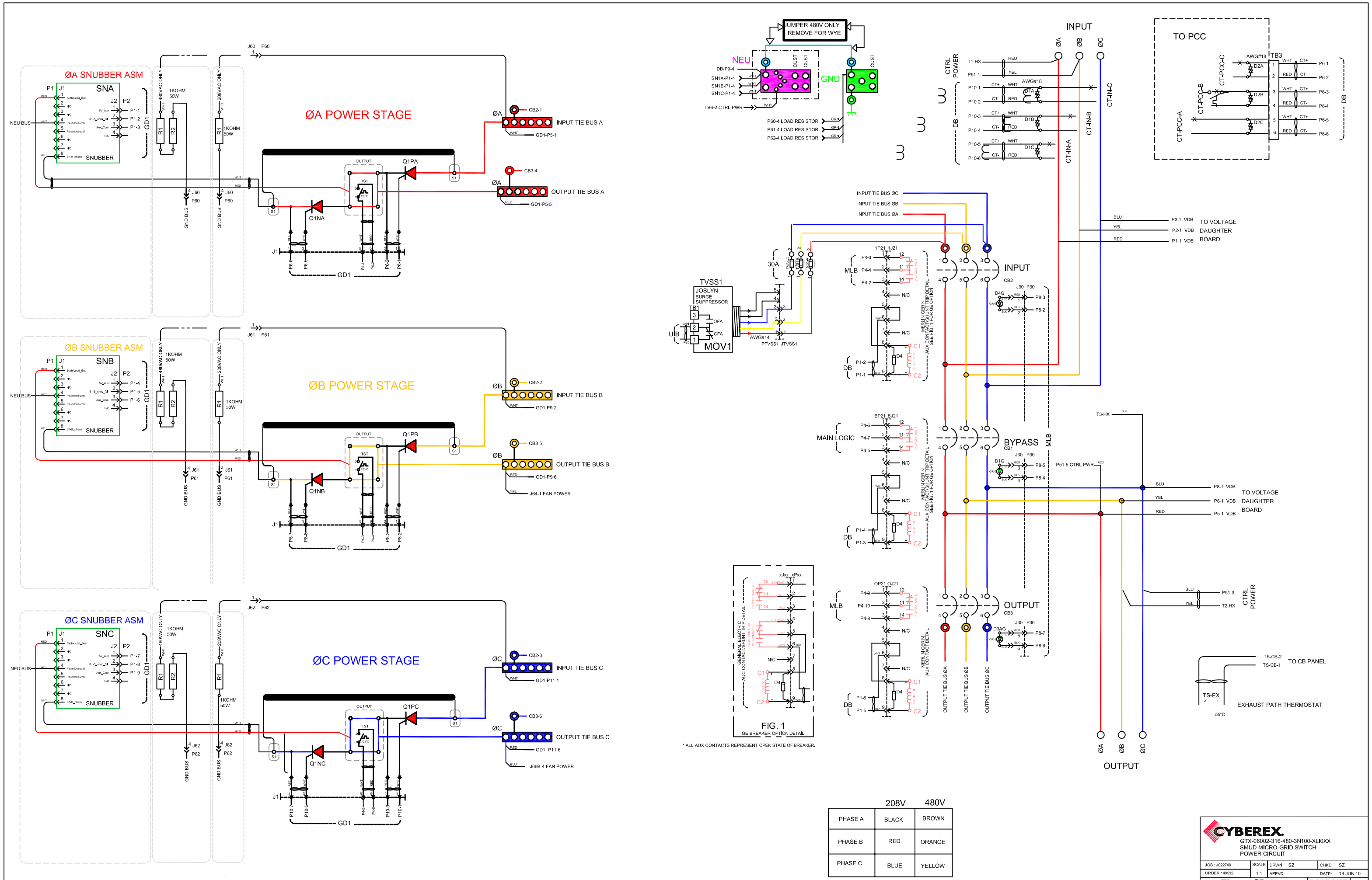

	208V	480V
PHASE A	BLACK	BROWN
PHASE B	RED	ORANGE
PHASE C	BLUE	YELLOW

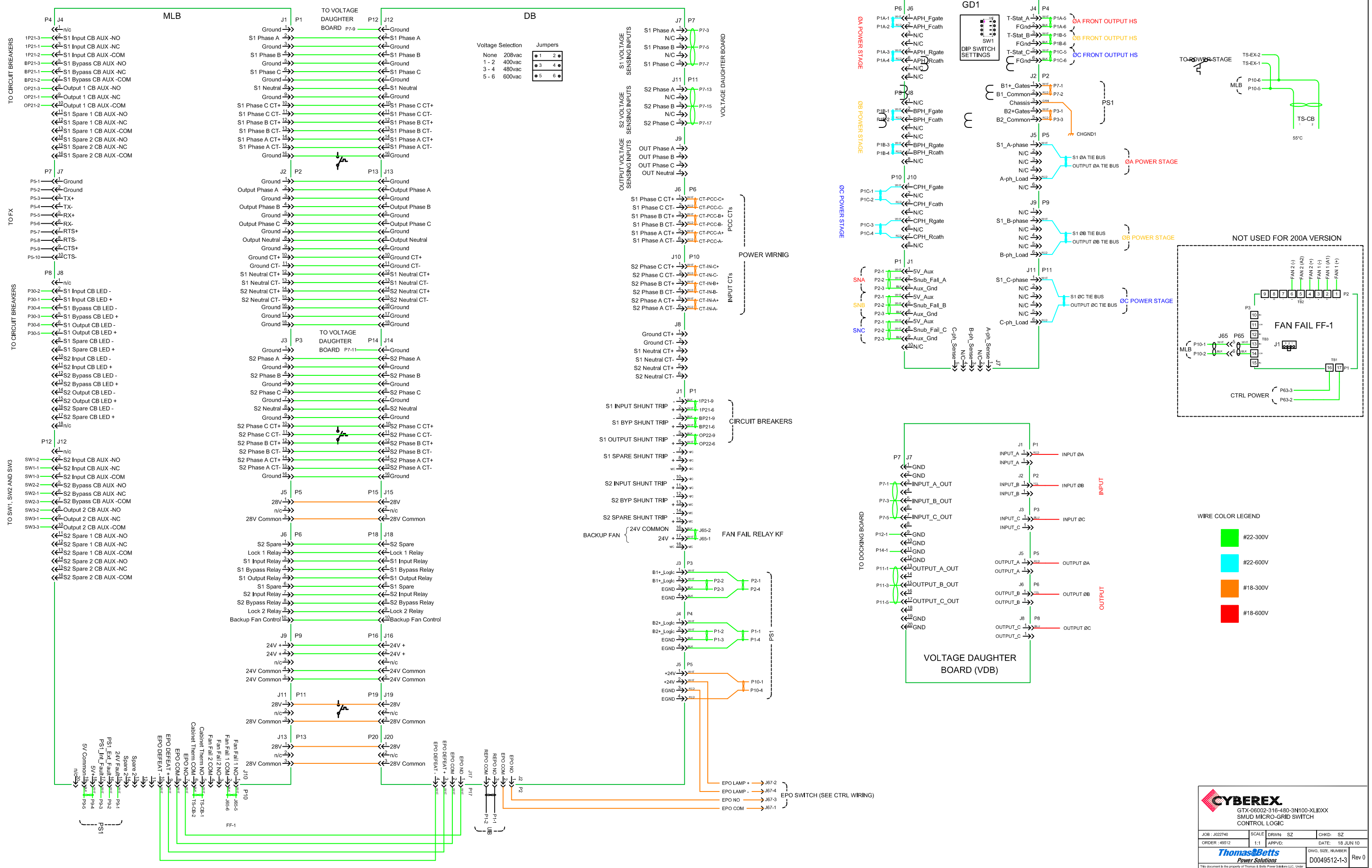

CYBEREX.

GTX-06002-316-480-3N100-XLI0XX
SMUD MICRO-GRID SWITCH
CONTROL LOGIC

JOB : J022740	SCALE 1:1	DRWN: SZ	CHKD: SZ
ORDER : 49512		APPVD:	DATE: 18 JUN 10

Thomas&Betts Power Solutions

This document is the property of Thomas & Betts Power Solutions LLC. Under copyright law, distribution and reproduction of this document, in whole or in part, is prohibited without prior written permission from Thomas & Betts Power Solutions LLC.

DWG, SIZE, NUMBER: D0049512-1-3 Rev 0

SHEET 2 OF 4

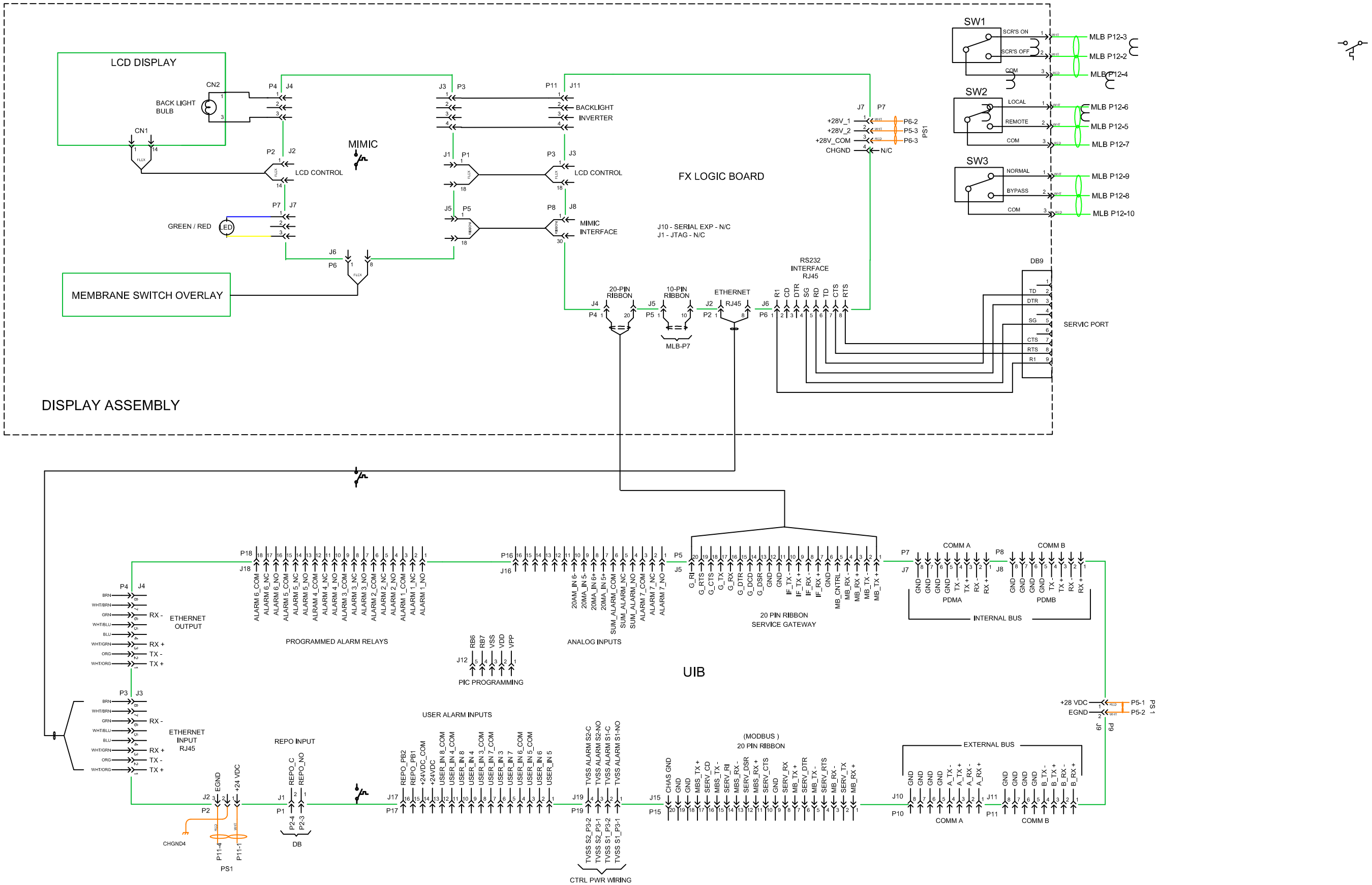

CYBEREX.

GTX-06002-316-480-3N100-XLI0XX
SMUD MICRO-GRID SWITCH
DISPLAY AND UIB

JOB : J022740	SCALE	DRWN: SZ	CHKD: SZ
ORDER : 49512	1:1	APPVD:	DATE: 18 JUN 10
Thomas&Betts Power Solutions		DWG, SIZE, NUMBER D0049512-1-3	Rev 0
		SHEET 3 OF 4	

This document is the property of Thomas & Betts Power Solutions LLC. Under copyright law, distribution and reproduction of this document, in whole or in part, is prohibited without prior written permission from Thomas & Betts Power Solutions LLC.

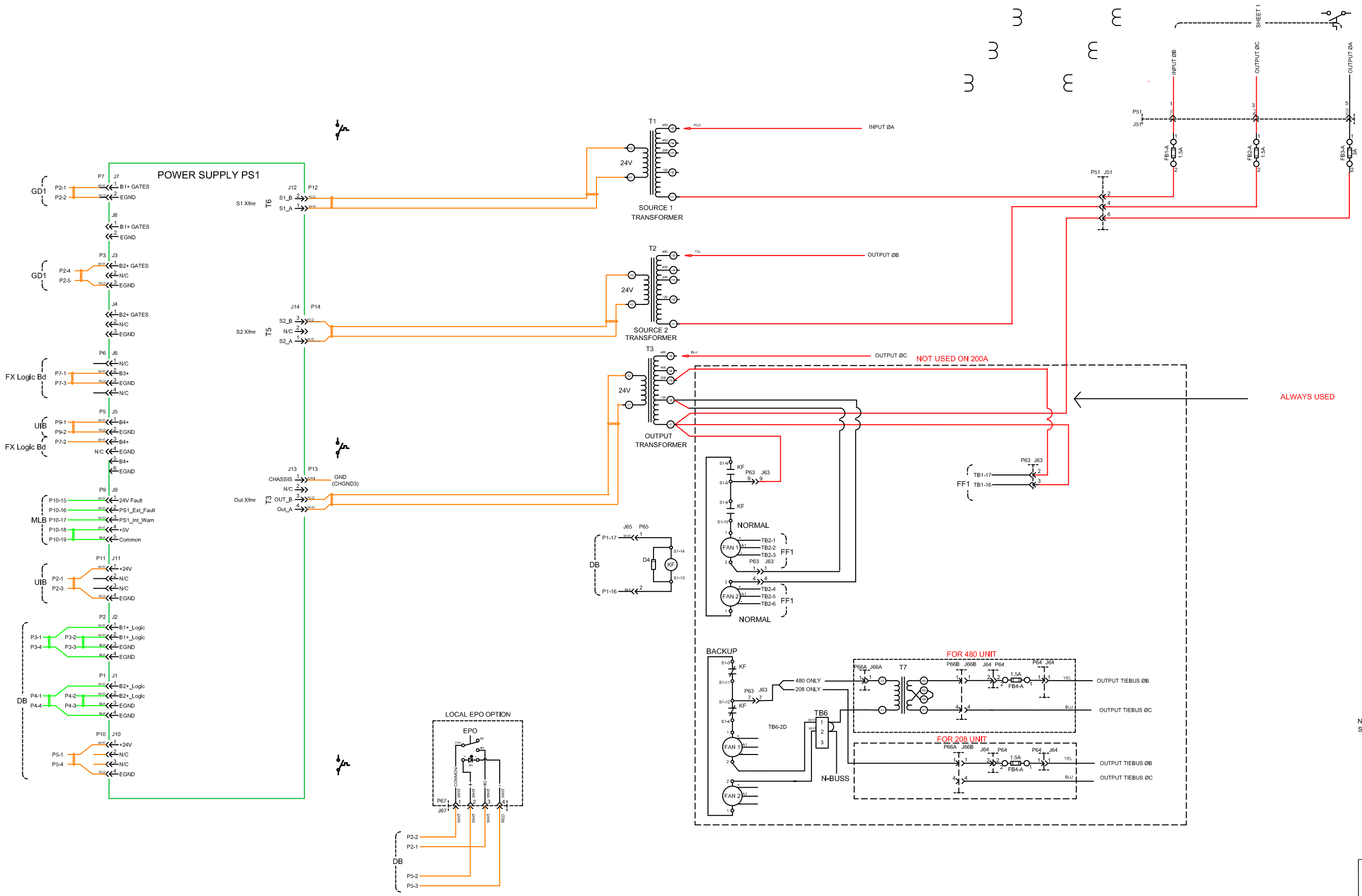
POWER SUPPLY PS1
GD1
P2-1
P2-2
P7
J7
B1+ GATES
EGND
J8
B1+ GATES
EGND
P3
J3
P2-4
P2-5
B2+ GATES
N/C
EGND
J4
B2+ GATES
N/C
EGND
FX Logic Bd
P7-1
P7-3
P6
J6
B3+
EGND
N/C
UIB
P9-1
P9-2
P7-2
P5
J5
B4+
EGND
B4+
EGND
MLB
P10-15
P10-16
P10-17
P10-18
P10-19
P9
J9
24V Fault
PS1_Ext_Fault
PS1_Int_Warn
+5V
Common
P2-1
P2-3
P11
J11
+24V
N/C
EGND
DB
P3-1
P3-2
P3-3
P3-4
P2
J2
B1+_Logic
EGND
P4-1
P4-2
P4-3
P4-4
P1
J1
B2+_Logic
EGND
P5-1
P5-4
P10
J10
+24V
N/C
EGND
S1 Xfmr
T6
J12
P12
S1_B
S1_A
S2 Xfmr
T5
J14
P14
S2_B
N/C
S2_A
Out Xfmr
T3
J13
P13
CHASSIS
N/C
OUT_B
Out_A
GND
(CHGND3)
T1
24V
SOURCE 1
TRANSFORMER
INPUT ØA
T2
24V
SOURCE 2
TRANSFORMER
OUTPUT ØB
T3
24V
OUTPUT
TRANSFORMER
OUTPUT ØC
NOT USED ON 200A
ALWAYS USED
P51
J51
INPUT ØB
OUTPUT ØC
OUTPUT ØA
SHEET 1
FB1-A
1.5A
FB2-A
1.5A
FB3-A
1.5A
FF1
TB1-17
TB1-16
P63
J63
KF
NORMAL
FAN 1
FAN 2
TB2-1
TB2-2
TB2-3
TB2-4
TB2-5
TB2-6
DB
P1-17
P1-16
J65
P65
D4
BACKUP
480 ONLY
208 ONLY
TB6-2D
TB6
N-BUSS
T7
FOR 480 UNIT
FOR 208 UNIT
P66A
J66A
P66B
J66B
J64
P64
FB4-A
OUTPUT TIEBUS ØB
OUTPUT TIEBUS ØC
LOCAL EPO OPTION
EPO
COMMON
NC
P67
J67
P2-2
P2-1
P5-2
P5-3
WIRE COLOR LEGEND
#22-300V
#22-600V
#18-300V
#18-600V
NOTE 1. CONNECTION DEPENDS UPON SYSTEM VOLTAGE.
CYBEREX
GTX-06002-316-480-3N100-XLI0XX
SMUD MICRO-GRID SWITCH
CONTROL POWER
JOB : J022740
ORDER : 49512
SCALE 1:1
DRWN: SZ
CHKD: SZ
APPVD:
DATE: 18 JUN 10
Thomas&Betts
Power Solutions
DWG. SIZE. NUMBER
D0049512-1-3
Rev 0
SHEET 4 OF 4

TAB 3 – ALARM LIST

5900 Eastport Blvd., Bldg. V • Richmond, VA 23231-4453 • T: 804.236.3300 • F: 804.236.4040 • www.cyberex.com

APPENDIX TABLE A-2
System Event Table (Ref. Section 4.4.7)

Event Text	Sev	Req Ack	Active	Arguments Saved with Event	Description	Corrective Action
* Display software VA1.A2 *	I			major version, minor version	The display software has begun its initialization of the system. The version number of the software is stated.	The message is informational.
A1 over temperature	W	x	x	who (string)	A portion of the unit is over the preset temperature required for normal operation. The unit may still operate normally. Temperature sensors are on the heatsinks and cabinet.	Contact DPS representative immediately.
A1 returned to normal temperature	I			who (string)	A portion of the unit has returned to a normal operating temperature. Temperature sensors are on the heatsinks and cabinet.	The message is informational.
Auto transfer is now enabled	I				The auto transfer feature has been enabled.	The message is informational and is intended to provide traceability.
Auto transfer is now disabled	W				The auto transfer feature has been disabled.	The message is informational and is intended to provide traceability.
Breaker A1 Form C failure	W	x		breaker name (see note at end)	The unit has encountered a failure in reading the state of a breaker.	Contact DPS representative for immediate replacement.
Breaker A1 is now closed	W			breaker name (see note at end)	A Load or Input breaker has been closed on the unit.	The message is informational.
Breaker A1 is now closed	W			breaker name (see note at end)	A Bypass breaker has been closed on the unit. Bypass breakers should normally remain open.	For normal operation, return the unit to a condition where the closed breaker is open again. The message is informational.
Breaker A1 is now open	A	x	x	breaker name (see note at end)	A Load or Input breaker has been opened on the unit. Load and Input breakers should normally remain closed.	For normal operation, return the unit to a condition where the open breaker is closed again. The message is informational.
Breaker A1 is now open	I		x	breaker name (see note at end)	A Bypass breaker has been opened on the unit.	The message is informational.
Breaker A1 shunt tripped	A	x		breaker name (see note at end)	The unit intentionally shunt tripped a breaker.	The message is informational.
Can not read non-volatile parameters, using defaults	A	x			The display software is unable to load user set points and system configuration information. Default values have been used. This system's Ethernet will not work correctly.	Contact DPS representative for immediate replacement.
Can not read valid display temperature	W	x			The display is unable to utilize the onboard temperature sensor. The product may still function normally without sensing temperature.	Contact DPS representative for replacement.
Can not sense state on breaker A1	A	x		breaker name (see note at end)	The unit attempted to check the state of a breaker (open or closed) but the indication was conflicting.	Contact DPS representative immediately.
Can not trip breaker A1	A	x		breaker name (see note at end)	The unit attempted to shunt trip and breaker but failed to see an indication that the breaker was tripped.	Contact DPS representative immediately.
Display battery is dead, logs will be lost	A	x			The battery powers the event log is dead. Event logs have been lost.	Contact DPS representative for replacement.
Display battery is low, replace soon	W				The battery that powers the event log needs replacement.	Contact DPS representative for replacement.
Display initialization complete	I				The display software of the given revision has booted normally.	The message always occurs at power-up or reset.
Display restarted due to internal reset	W				The display was booted due to a previous internal system reset.	The message is informational.
Display restarted due to power up	W				The display was booted due to a previous loss of power.	The message is informational.
Display restarted due to watchdog reset	W				The display was booted due to an internal reset.	The message is informational.

APPENDIX TABLE A-2
System Event Table (Ref. Section 4.4.7)

Event Text	Sev	Req Ack	Active	Arguments Saved with Event	Description	Corrective Action
Downgraded software	I				The user downgraded the display software.	The message is informational.
Email failed to find server at specified address	W			address #	The unit attempted to send an email to the email server at the given IP address. However, the unit could not find an email server at that address.	Verify a physical connection is possible to that IP address. Validity the IP address with the IT administrator for your site. Verify the unit has permission to write to the email server at that IP address.
Email failed, invalid Ethernet setup	W			address #	The unit attempted to send an email to the email server. However, the unit does not have ethernet properly configured.	Verify a physical connection is possible to that IP address. Validity the IP addresses with the IT administrator for your site. Verify the unit has permission to write to the email server at that IP address.
Email failed, server denied send request	W			address #	The unit attempted to send an email to the email server at the given IP address. However, the unit was denied a connection to the email server at that address.	Verify a physical connection is possible to that IP address. Validity the IP address with the IT administrator for your site. Verify the unit has permission to write to the email server at that IP address.
Email send setup failed	W				The unit attempted to send an email to the email. However, the unit could not configure the email properly.	Verify a physical connection is possible to that IP address. Validity the IP address with the IT administrator for your site. Verify the unit has permission to write to the email server at that IP address.
Email send to address #A1 failed (A2)	W			address #, error #	The unit attempted to send an email to the email server at the given IP address. However, the unit encountered an error.	Verify a physical connection is possible to that IP address. Validity the IP address with the IT administrator for your site. Verify the unit has permission to write to the email server at that IP address. Contact DPS representative immediately.
EPO (Emer Power Off) has been defeated	W	x			The EPO or Emergency Power Off feature has been defeated by the user.	The message is informational and is intended to provide traceability.
EPO (Emer Power Off) has been enabled	I				The EPO or Emergency Power Off feature has been enabled by the user.	The message is informational and is intended to provide traceability.
Event info memory is available	I				The amount of free memory used for event log arguments has dropped to recommended levels.	The message is informational.
Event info memory is full	A	x	x		The display memory used to store arguments for events is full. Events will still be stored, but arguments will be indicated with a “(lost)” in place of the argument field.	Delete unnecessary events and more memory will become available.
Event info memory is low	W		x		The display memory used to store arguments for events is low. Events will still be stored with arguments until memory is completed exhausted.	Delete unnecessary events and more memory will become available.
Event log corrupt, log restarted	W				During the boot up procedure the event log data was found to be corrupt and unusable. The log was erased and restarted.	The message is informational.
Event log restarted	W				The display could not find a previously stored event log on power up. If a previous event log was available, it was lost.	Check for battery warnings in the event log. The battery may need to be replaced. Contact DPS representative for replacement.
Event memory is available	I				The amount of free memory used for events has dropped to recommended levels.	The message is informational.

APPENDIX TABLE A-2
System Event Table (Ref. Section 4.4.7)

Event Text	Sev	Req Ack	Active	Arguments Saved with Event	Description	Corrective Action
Event memory is full	A	x	x		The display memory used to store events is full. Events will still be stored, but earlier events will be lost.	Delete unnecessary events to prevent loss of earlier events.
Event memory is low	W		x		The display memory used to store events is low. Events will still be stored, but earlier events may be lost when memory fills.	Delete unnecessary events to prevent loss of earlier events.
Event wave capture memory is avail	I				The amount of free memory used for event log waveform capture has dropped to recommended levels.	The message is informational.
Event wave capture memory is full	A	x	x		The display memory used to store waveform captures for events is full. Events will still be stored, but waveform captures will be indicated with a "(lost)" in place of the argument field.	Delete unnecessary events with waveform captures attached to them and more memory will become available.
Event wave capture memory is low	W		x		The display memory used to store waveform captures for events is low. Events will still be stored normally until memory is completed exhausted.	Delete unnecessary events with waveform captures attached to them and more memory will become available.
Failed to find contact buttons & LEDs	A				The display is unable to utilize the mimic, buttons, & knob. The product may still function normally without those inputs. Use other connectivity means to verify.	Contact DPS representative for immediate replacement.
Failed to start general bus driver	A	x			The driver for the external components has failed to begin at boot time. The transfer logic will still function normally, but other functionality such as User-Interface or Thermal Scan may fail.	Internal Error. Contact DPS.
Failed to start main logic driver	A	x			The driver for the main logic component has failed to begin at boot time. Logic may be working with default set points, or may not be working at all.	Internal Error. Contact DPS immediately.
Fan #A1 has been restored	I			fan (int)	The fan has begun operating normally.	The message is informational.
Fan #A1 has failed	W	x	x	fan (int)	There is an indication that a fan has stopped flowing air.	Check for obstruction or contact DPS representative.
Gate Drive A1 communication high retries	W		x	gd # (int)	The number of failures for packets between the logic and gate drive is above the recommended level. The unit may still operate normally.	Contact DPS representative immediately. This may be the result of hardware failure or cabling.
Gate Drive A1 communication lost	A	x	x	gd # (int)	The logic lost communication to the gate drive. Some gate drive features may be lost. The gate drives may lock in their current positions.	Contact DPS representative immediately. This may be the result of hardware failure or cabling.
Gate Drive A1 communication restored	I			gd # (int)	The logic restored communication to the gate drive. Normal operation will continue.	The message is informational.
Gate drive fuse fault on source A1	A	x	x	source (int)	The gate drive has indicated a blown fuse.	Contact DPS representative immediately. This may be the result of hardware failure.
Gate drive power fault on source A1	A	x	x	source (int)	The gate drive has indicated a power fault.	Contact DPS representative immediately. This may be the result of hardware failure.
Gate drive stuck opto on source A1	A	x	x	source (int)	The gate drive has indicated a stuck component.	Contact DPS representative immediately. This may be the result of hardware failure.

APPENDIX TABLE A-2
System Event Table (Ref. Section 4.4.7)

Event Text	Sev	Req Ack	Active	Arguments Saved with Event	Description	Corrective Action
Gate hold on source A1 due to 'A2'	A	x	x	source (int), reason (string)	The unit has held onto a single source because of the encountered condition 'A2' and will not transfer. This hold remains in effect until the condition is cleared.	The unit held on a single source and is not operational. Contact DPS representative immediately to determine a corrective action.
Gate hold removed on source A1	I			source (int)	The condition which caused gate hold has been cleared and the gate hold was removed. The unit is now functioning normally.	The message is informational.
Gate lock on source A1 due to 'A2'	A	x	x	source (int), reason (string)	The unit has locked onto a single source because of the encountered condition 'A2'. This lock remains in effect until the unit is restarted.	The unit has locked onto a single source and is not operational. Contact DPS representative immediately to determine a corrective action.
High retries to A1 board	W			board (string)	The number of failures for packets from the display to another board is above the recommended level. The unit operates normally because packets are sent again.	Contact DPS representative. This may be the result of hardware failure or cabling.
Illegal access to Modbus TCP from IP address A1	W			IP address attempting request	An attempt was made to utilize Modbus TCP via Ethernet functionality from an IP address that does not have access rights.	Check the IP address in the event. If deemed "'safe," add the IP address to the "Modbus Configuration" window. (Options/Access/Config)
ISOC detected on source A1	A	x		source (int)	The inactive source was found to have an over current condition (ISOC). The unit has taken appropriate action.	
Item, A1 (A2), is above high limit (A3)	A	x	x	id, value, limit	The data item has reached a value that is above the preset high limit of the unit.	Depending on the item, this may be an indication of a power quality problem. Contact DPS representative.
Item, A1 (A2), is above high yellow limit (A3)	W		x	id, value, limit	The data item has reached a value that is above the preset yellow high limit of the unit.	Depending on the item, this may be an indication of a power quality problem. Contact DPS representative.
Item, A1 (A2), is below low limit (A3)	A	x	x	id, value, limit	The data item has reached a value that is below the preset low limit of the unit.	Depending on the item, this may be an indication of a power quality problem. Contact DPS representative.
Item, A1 (A2), is below low yellow limit (A3)	W		x	id, value, limit	The data item has reached a value that is below the preset yellow low limit of the unit. The index may be used to indicate the source.	Depending on the item, this may be an indication of a power quality problem. Contact DPS representative.
Item, A1 (A2), is normal	I			value, limit	The data item has returned to a value that is within the limits of the unit.	The message is informational.
Item, A1 A2 (A3), is above high limit (A4)	A	x	x	id, index, value, limit	The data item has reached a value that is above the preset high limit of the unit. The index may be used to indicate the source.	Depending on the item, this may be an indication of a power quality problem. Contact DPS representative.
Item, A1 A2 (A3), is above high yellow limit (A4)	W		x	id, index, value, limit	The data item has reached a value that is above the preset yellow high limit of the unit. The index may be used to indicate the source.	Depending on the item, this may be an indication of a power quality problem. Contact DPS representative.
Item, A1 A2 (A3), is below low limit (A4)	A	x	x	id, index, value, limit	The data item has reached a value that is below the preset low limit of the unit. The index may be used to indicate the source.	Depending on the item, this may be an indication of a power quality problem. Contact DPS representative.
Item, A1 A2 (A3), is below low yellow limit (A4)	W		x	id, index, value, limit	The data item has reached a value that is above the preset high limit of the unit. The index may be used to indicate the source.	Depending on the item, this may be an indication of a power quality problem. Contact DPS representative.

APPENDIX TABLE A-2
System Event Table (Ref. Section 4.4.7)

Event Text	Sev	Req Ack	Active	Arguments Saved with Event	Description	Corrective Action
Item, A1 A2 (A3), is normal	I			value, limit, index	The data item has returned to a value that is within the limits of the unit. The index may be used to indicate the source.	The message is informational.
Logic A1 communication high retries	W		x	section (DSP A, DSP B, Gate, Display)	The number of failures for packets between DSPs in the logic is above the recommended level. The unit may still operate normally.	Contact DPS representative immediately. This may be the result of hardware failure, cabling, or noise interference.
Logic A1 communication lost	A	x	x	section (DSP A, DSP B, Gate, Display)	The logic lost communication within itself. Some logic features maybe lost.	Contact DPS representative immediately. This may be the result of hardware failure, cabling, or noise interference.
Logic A1 communication restored	I			section (DSP A, DSP B, Gate, Display)	The logic restored communication within itself. Normal operation will continue.	The message is informational.
Logic VA1.A2 initialization failed	A	x		major version, minor version	The logic has failed to initialize.	Contact DPS representative immediately.
Logic VA1.A2 initialized successfully	I			major version, minor version	The logic has initialized successfully.	The message is informational.
Lost communication to A1 board	A	x	x	name of board	The display lost communication with a desired component. Some operational features maybe lost depending on the purpose of the component.	Contact DPS representative immediately. This may be the result of hardware failure or cabling.
Manual transfer can not find a better source	W				The user initiated a manual transfer. However, the unit could not find a source of equal or better quality to transfer to. The unit disallowed the transfer.	Make sure a source of equal or better quality exists before attempting a manual transfer.
Manual transfer to a worse quality source	A				The user commanded the unit to transfer to a poor quality source.	The message is informational.
Modbus driver failed to start	A	x			The driver for the Modbus component has failed to begin at boot time. Display and transfer logic will be working properly, but Modbus RS-485 & TCP have failed.	Internal Error. Contact DPS.
Modbus TCP internal error A1	A	x		error number	The Modbus TCP driver encountered and error transmitting a TCP/IP packet.	Contact DPS representative.
No email address enabled	W				The user requested an email be sent or an automatic email was generated, but no email address was enabled. The email could not be sent.	Use the email configuration dialog to enable stored email address to be the destination of the request email.
Output is available	I				A previously unavailable output is now available.	The message is informational.
Output is unavailable	A	x	x		The output of the unit is no longer available. Previous event entries indicated possible reasons.	Previous event entries indicate possible reasons. If necessary, contact DPS for aiding resolution.
Packet to A1 failed after max retries	A	x		name of board, header	A packet sent by the display never reached its destination. A requested feature may not proceed properly, but normal operation may continue.	Contact DPS representative. This may be the result of hardware failure or cabling.
Peak current overload inhibit	A		x		There is a peak current overload which has inhibited transfer to another source.	The message is informational.
Peak current overload uninhibit	I				There is a peak current overload condition has been removed. The unit may be operating normally.	The message is informational.
Phase rotation on source A1	A	x	x	source (int)	A phase rotation has been detected on a source.	Contact DPS representative. This may be the result of hardware failure or cabling.

APPENDIX TABLE A-2
System Event Table (Ref. Section 4.4.7)

Event Text	Sev	Req Ack	Active	Arguments Saved with Event	Description	Corrective Action
Power supply normal	I			none	The power supply is now functioning normally.	The message is informational.
Power supply type A1 failure	W	x		power supply	24V = Failure of the 24 VDC supply. DC = One of the output fuses of the PS1 has failed. AC = One of the control panel switches is open, or loss of control power source, or one of the input fuses of the PS1 has failed.	If all control panel switches are closed and both sources are available to the static switch, then contact a DPS service representative immediately.
Preferred source is now A1	W			value (int)	The user changed the preferred source.	The message is informational and to provide traceability.
Restarted clock	W				The clock on the display has been restarted.	The message is informational, but may be in conjunction with a clock failure. It may occur normally with a battery change.
Retransfer is now disabled	W				The retransfer feature has been disabled. The unit will not transfer back to the preferred source.	The message is informational and is intended to provide traceability.
Retransfer is now enabled	I				The retransfer feature has been enabled.	The message is informational and is intended to provide traceability.
RMS current overload inhibit	W		x		There is a RMS current overload which has inhibited transfer to another source.	The message is informational.
RMS current overload uninhibit	I				There is a RMS current overload condition has been removed. The unit may be operating normally.	The message is informational.
SCR locked open on source A1	A	x	x	source (int)	The unit sensed an Open SCR. Defensive action can be taken to automatically transfer away from the source and lock.	Contact DPS representative immediately.
SCR shorted on source A1	A	x	x	source (int)	The unit sensed a Shorted SCR. Defensive action can be taken to automatically transfer toward the source and lock.	Contact DPS representative immediately.
SNMP functionality A1	I			state (Enabled, Disabled)	The telnet feature can be enabled or disabled by the user. This event logs its state and occurs only at power-up or reset.	The message always occurs at power-up or reset.
Snubber failed on source A1	A	x	x	source (int)	The snubber board has encountered a failure.	Contact DPS representative. This may be the result of hardware failure or cabling.
Snubber restored on source A1	I			source (int)	The snubber board failure has been corrected.	The message is informational.
Source A1 is available (green PQ)	I			source (int)	The source is available as a transfer destination.	The message is informational.
Source A1 is poor (yellow PQ)	W		x	source (int)	The source is unavailable to transfer to due to poor power quality in the yellow zone.	Contact the source provider to determine a corrective action for the power quality condition.
Source A1 is unavailable (red PQ)	A		x	source (int)	The source is unavailable to transfer to due to poor power quality in the red zone.	Contact the source provider to determine a corrective action for the power quality condition.
Started communication with A1 board	I			name of board	The display obtained communication with a desired component. Normal operation will continue.	The message is informational.
System event A1 (Code: A2)	I			string, number	This is an internal error that should not ever be present.	Contact DPS.
System fault A1 (Code: A2)	A			string, number	This is an internal error that should not ever be present.	Contact DPS.

APPENDIX TABLE A-2
System Event Table (Ref. Section 4.4.7)

Event Text	Sev	Req Ack	Active	Arguments Saved with Event	Description	Corrective Action
TCP/IP functionality A1 for 'A2' (A3)	I			state (Enabled, Disabled), hostname, ip addr	The TCP/IP functionality is necessary for a number of features. This event logs its start and key parameters to its operation. It occurs only at power-up or reset.	The message always occurs at power-up or reset.
Telnet functionality A1	I			state (Enabled, Disabled)	The telnet feature can be enabled or disabled by the user. This event logs its state and occurs only at power-up or reset.	The message always occurs at power-up or reset.
Transfer due to A1 failed	A	x		reason (string), from (int), to (int)	The logic found it necessary to begin a transfer, but the transfer did not complete successfully.	Contact DPS representative.
Transfer due to A1 forcefully completed	W	x		reason (string), from (int), to (int)	A transfer has occurred. However, the transfer completed in a non-optimal manner.	The message is informational.
Transfer due to A1 successfully completed	I			reason (string), from (int), to (int)	A transfer has occurred and complete successfully.	The message is informational.
TVSS fault on source A1	W	x		source (int)	One of the TVSS modules for the unit is indicating a failure. The unit will operate normally with reduced protection.	Contact DPS representative.
TVSS restored for source A1	I			source (int)	The TVSS issue has been resolved.	The message is informational.
Un/Bypass sequence cancelled on step A1 A2	A	x		unbypass, step, breaker states	The user cancelled the bypass or unbypass sequence midway through the sequence.	Verify the unit's breaker state is as expected. Contact DPS representative with any issues.
Un/Bypass sequence failure on step A1 A2	A	x		unbypass, step, breaker states	The bypass or unbypass sequence failed midway through the sequence. This normally is because of a breaker failure.	Verify the unit's breaker state is as expected. Contact DPS representative with any issues.
Un/Bypass sequence successful	I				The guided breaker bypass or unbypass sequence was successfully completed.	The message is informational.
Unable to contact lcd display	A	x			The display is unable to utilize the LCD screen. The unit may still function normally without the LCD screen and be accessible via Ethernet.	Contact DPS representative for immediate replacement.
Unable to read real time clock	A	x			The current time and date were not available from the real time clock. The unit will use a default time and date. The event log may not function properly.	Contact DPS representative for replacement.
Unit is in TEST MODE	W				A service professional has placed the unit in test mode.	The message is informational and to provide traceability.
Unit is in UL TEST MODE	W				A service professional has placed the unit in UL test mode.	The message is informational and to provide traceability.
Unit is now in normal operation	I				The unit has been placed in normal operating mode from test mode.	The message is informational and to provide traceability.
Unknown system event (test use only)	A	x	x	number	This is an internal error that should not ever be present.	Contact DPS.
Unknown system event reset (test use only)	I			number	This is an internal error that should not ever be present.	Contact DPS.
Upgrade Logic Software	I				The logic software has been upgraded by the user.	The message is informational.
Upgraded software	I				The user upgraded the display software via TCP/IP.	The message is informational.

APPENDIX TABLE A-2
System Event Table (Ref. Section 4.4.7)

Event Text	Sev	Req Ack	Active	Arguments Saved with Event	Description	Corrective Action
User activated EPO (Emer Power Off)	A	x			The EPO or Emergency Power Off circuit has been activated. All breakers have been shunt tripped.	The message is informational.
User forced transfer from A1 to A2	I			source from (int), source to (int)	The user directed the unit to the manually/forcefully transfer output to another source.	The message is informational and to provide traceability.
User reboot of display	I				A command was issued to do a normal reboot of the display. The product will still operate normally.	The message is informational.
User Undo of un/bypass sequence on step A1 A2	W			unbypass, step, breaker states	The user cancelled the bypass or unbypass sequence midway through the sequence.	The undo functionality should return the unit to its previous state.
Web functionality A1	I			state (Enabled, Disabled)	The telnet feature can be enabled or disabled by the user. This event logs its state and occurs only at power-up or reset.	The message always occurs at power-up or reset.
Note: possible breaker names are as follows: S1 Input, S2 Input, S3 Input, S1 Bypass, S2 Bypass, S3 Bypass, Load A, Load B						

TAB 4 – SPARE PARTS LIST

5900 Eastport Blvd., Bldg. V • Richmond, VA 23231-4453 • T: 804.236.3300 • F: 804.236.4040 • www.cyberex.com

SP1-SMUD-1200480

LEVEL 1 SPARES KIT

Item	Description	Qty
01456-49-R	AC SURGE PROTECTOR, 480/277V	1
07-14-000007	630 CFM W2E200-HH86-90 ROT SENS	3
07-30-000060	FAN FAIL SENS PWB 208/240V	1
07-30-000068	AIR FILTER DISPOSABLE 18X20X1	1
08-35-020022	FUSE, 3A 600V DELAY FNQ-R-3	5
08-35-020024	FUSE: 1.5A 600V FNQ-R-1-1/2	5
08-35-020028	FUSE: 3-1/2 600V DELAY FNQ-R-3.5	5
420000002004	FUSE 600 VAC 30AMP SLOBLO CLASS-CC CART	6

SP3-SMUD-1200480

LEVEL 3 SPARES KIT

Item	Description	Qty
01456-49-R	AC SURGE PROTECTOR, 480/277V	1
07-14-000007	630 CFM W2E200-HH86-90 ROT SENS	3
07-30-000060	FAN FAIL SENS PWB 208/240V	1
07-30-000068	AIR FILTER DISPOSABLE 18X20X1	1
08-35-020022	FUSE, 3A 600V DELAY FNQ-R-3	5
08-35-020024	FUSE: 1.5A 600V FNQ-R-1-1/2	5
08-35-020028	FUSE: 3-1/2 600V DELAY FNQ-R-3.5	5
16-25-025004	CT: 1600:.1 CT2707-01 SPL_C	3
170310140000	SS3 GATE DRIVE, XG-GD	2
170310141003	SNUBBER, XG-480V-800A	3
170310142001	SS3 NEW MAIN LOGIC, XG-MLB	1
170310143000	POWER SUPPLY, XG-PS1	1
170310145002	SS3 LARGE AMP DOCKING PCA	1
170310148000	SS3 USER INTERFACE, XG-UI	1
170310150000	SS3 F7 MIMIC, XG	1
30-83-000017	XFRMR 480. .208:120 HC0500-4400-FKP2	1
30-83-000028	XFRMR, MULTI-TAP 120/208/400/480 SEC SS3	2
41-98-000054	PWR SPLY SWITCHING 100-240VAC:24VDC 200W	1
41-98-657041	PCA, FX BOARD	1
420000002004	FUSE 600 VAC 30AMP SLOBLO CLASS-CC CART	6
45-40-674505	H.S. ASSEM, 1200 SS3	3

TAB 5 – START-UP CHECKLIST

5900 Eastport Blvd., Bldg. V • Richmond, VA 23231-4453 • T: 804.236.3300 • F: 804.236.4040 • www.cyberex.com

SUPERSWITCH3 TECHNOLOGY	Field Procedure		
	NO. **FP-SS3-001**	Rev: **B04**	01-20-07
	Description: **Field Startup Checklist**		
Site Support Services	Originator: S. Wendell		09-30-05
	Equipment Affected: **Cyberex Super Switch 3**		

The material disclosed herein is propriety and confidential to Danaher Power Solution. This document is issued for DPS Field Service information only. Further distribution of this documentation is prohibited without the prior written authority from Danaher Power Solutions.

A11 – 01-23-06	Added Reference to MAC ID Programming (Joe F.)
B01- 05-31-06	Added CB trip setting chart on last page –
B02- 10-05-06	Added Guided Bypass Section 7.0, also relabeled MLB DSP & MLB PIC IC's. (Joe F.)
B03- 01-04-07	Relabeled MLB DSP & MLB PIC IC's. (Joe F.)
B03- 01-20-07	Added UPS Upstream Information Page (Joe F.)

Guidelines for commissioning Cyberex SS-3 Digital Static Transfer Switches

Tools Required: Digital Multi Meter – i.e.: Fluke 87
Phase Sequence Meter – i.e.: Syntel T471
Miscellaneous Hand Tools – Nut-drivers, Screwdrivers, etc….
Laptop Computer

Equipment Affected: Super Switch 3

Date: _____ Model No**:** _____

Customer: _____ Serial No: _____

On-Site Contact: _____ Version Software: _____

Field Engineer: _____ Current Rating of Equipment _____amps

1.0 PRELIMINARY CHECKOUT

_____ 1.01 Permanent installation (Y or N)
_____ 1.02 Inspect side panels for damage
_____ 1.03 Remove side panels and inspect internal assemblies and wiring

2.0 INTERNAL CABINET INSPECTION

_____ 2.01 All packing material removed
_____ 2.02 Clean inside of cabinets- Look for metal shavings from conduit installation.
_____ 2.03 Wiring harness inspected for worn/damaged insulation
_____ 2.04 All crimp-on connectors Inspected for good electrical and physical connections
_____ 2.05 Check connector plugs in the control logic area for good electrical and physical integrity.
_____ 2.06 All customer-installed input/output wiring sized correctly.
_____ 2.07 All cabinets properly grounded; verify external ground wire brought into cabinet and connected to ground bus bar.
_____ 2.07 Record all the boards' information per the **PCB Serial Number Tracking Form** in **Section 9.0** at the end of this form.

3.0 PRE-POWER CHECKS

_____3.01 Verify that all internal breakers and switches are **OFF.**
_____3.02 Verify Source 1 voltage and phase rotation are correct.
_____3.03 Verify Source 2 voltage and phase rotation are correct.
_____3.04 Both sources in sync (measure phase A to phase A etc…of both sources).
Check all three phases. Voltage should be less than 10 volts.
_____3.05 Verify ground conductor is brought into unit and connected to Ground Bus bar.

_____3.06

If only 3 wires are brought in on each source measure each phase to ground to verify if sources have a grounded neutral. Should measure either 120 or 277 volts depending on if sources are 208 or 480v. Contact DPS Tech Support if measured voltages to ground are unbalanced.

_____ 3.07

WARNING

THE FOLLOWING STEPS WILL SUPPLY POWER TO THE OUTPUT OF THE SWITCH.

Before you close either of the two bypass switches or any of the output switches ask the customer if it is **OK** to apply power to the output of the STS.

When the incoming power to the STS is supplied by a **UPS,** remind the customer that it might be advisable to have the **UPS** in the bypass mode. This will avoid problems associated with in-rush currents or mis-wires downstream from the STS causing the UPS to have an overload condition.

4.0 LOGIC POWER-UP TEST

Start the Process from full bypass to Source #1

_____4.01 Close SW1, SW2, SW3 logic power switches.
_____4.02 Verify proper boot-up and proper operation of LED's.
_____4.03 Power supply green LED's on all outputs should be "on."
_____4.04 Close Source # 1 and Source# 2 Input Breakers and Load A & B Breakers.
_____4.05 Main Logic Board (MLB) 3 input power LED's should be "on" (LED's LD3, LD11 & LD7).
_____4.06 MLB blinking LED's should be blinking (LED's LD13, LD14, LD15 & LD51).
_____4.07 Gate Drive (GD) blinking LED's should be blinking (both boards, LED LD2).
_____4.08 F7 LCD screen should be on with startup menu.
_____4.09 F7 LED D5 will be on (D6 OFF).
_____4.10 User Interface Board (UIB) blinking LED should be blinking (LED 16).
_____4.11 Verify 6 "gate on" LED's are "on" on the SI GD board LED's 10, 11, 13, 17, 20 & 24.___
_____4.12 Verify input voltage metering on Graphical User Interface (LCD) for Source #1.
_____4.13 Open Source #1 input circuit breaker and verify transfer to Source #2.
_____4.14 Verify 6 "gate on" LED's are "on" on the S2 GD board LED's 10, 11, 13, 17, 20 & 24.
_____4.15 Verify input voltage metering on LCD for Source # 2.
_____4.16 Close Source #1's input circuit breaker and verify transfer back to Source #1.
_____4.17 Verify unit can be successfully by-passed to each source.

By-pass to Source #1 by using GUI and following prompts in the bypass menu as follows:

1. Open Source #2 input breaker to prevent transfer. (Unit shunt trips opposite input breaker.)
2. Close Source #1 by-pass breaker to by-pass unit. (Operator closes by-pass breaker).
3. Open Load A breaker to isolate load. (Operator opens Load A breaker).
4. Open Load B breaker to isolate load. (Unit shunt trips Load B breaker).
5. Open Source #1 input breaker to isolate unit from power. (Unit shunt trips input breaker).

_____4.18 Perform manual by-pass without GUI using the instruction placard on the door.
_____4.19 Repeat the above by-pass steps for Source #2.
_____4.20 Verify date and time set properly. If necessary adjust using GUI (Options > Time ….)
_____4.21 Record circuit breaker settings on attached page. If applicable.
_____4.22 EPO circuit checked (Consult with customer before testing).
_____4.23 Verify all Mimic Panel indicators are operational and accurate.
_____4.24 Verify accuracy of LCD meter values with Digital Multi-meter (DMM).

5.0 ENVIRONMENT

_____5.01 Clearance around cabinet Top: _____ Ft. Rear:_____ Ft.
_____5.02 Type of ventilation in the area
A/C _____ Forced Air _____
_____5.03 All cabinet fans operational (if applicable)

6.0 TRAINING

_____ Instruct site personnel on basic operation of equipment.
Indicate name and company of personnel instructed:

_____ _____

_____ _____
Name Company

7.0 GUIDED BYPASS VERIFICATION.
7.01 Verify that the unit can successfully be bypassed to source # 1 _____
7.02 Verify that the unit can successfully be bypassed to source # 2 _____

8.0 FINAL MEASUREMENTS

8.01 Record final measurements

SOURCE 1 VOLTAGE A-B _____ B-C _____ C-A _____

Does source have an input neutral conductor? _____

8.02 SOURCE 2 VOLTAGE A-B _____ B-C _____ C-A _____

Does source have an input neutral conductor? _____

8.03 STATIC SWITCH OUTPUT Which source is designated as preferred _____

Voltage A-B _____ B-C _____ C-A _____

Current A _____ B _____ C _____

8.04 Review the System and Transfer Configuration Screens and record settings below.

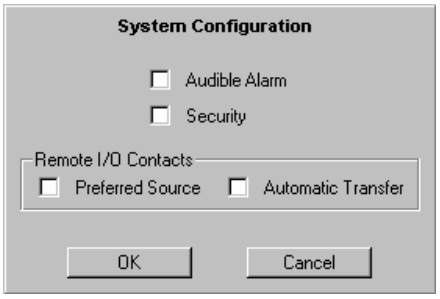

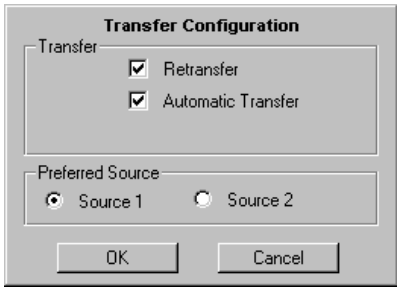

8.05 Download the Events and TLM logs via the Service Port and email to TAC.
(Name file with serial number of unit)

- ***The STS's are designed to operate with two AC input sources.***
  Extended operation (days) with only one source is not advised. In such cases it is recommended that the STS be placed in the Bypass mode until such time that both sources are available.

9.0 FINAL DISPOSITION

_____9.01 Unit On-line upon departure

_____On Source 1 _____ On Source 2

_____9.02 Unit In Bypass upon departure

_____ On Source 1 _____ On Source 2

10.0 MAC ID Identification

Section # 10.0 requires to record the MAC ID of each unit. Reference procedure # **FP-SS3-006 (MAC ID Programming)** for details on how to read each programmed MAC ID.

11.0 PCB Serial Number Tracking Form

This is to be filled out for every unit that is started **BEFORE the unit goes on line.**

The purpose of this form is to document the revision level of the critical PCB's for future reference.

CUSTOMER: _____ **DATE:** _____

UNIT SERIAL NUMBER: _____ **MAC ID:** _____

Please record the following information:

PCB	**PCB Serial Number**	**PCB Rev Number**	**Software version**
MAIN LOGIC BOARD (MLB)			(MLB - DSP A/B) - (MLB DSP C) - (MLB PIC) -
GATE DRIVE 1 (GD1)			U16 -
GATE DRIVE 2 (GD2)			U16 -
F7 LOGIC BOARD (F7)			Version:
F7 MIMIC BOARD			
DOCKING BOARD (DB)			
USER INTERFACE BOARD (UIB)			U22 -
LCD			
POWER SUPPLY (PS1)			
Note: Any units that have version 1.24 or higher the Focus 7 & MLB version can be verified by Pressing MENU-----VIEW-----SYSTEM.			

BREAKER TRIP SETTINGS (If Applicable)

	Long Time	Short Time Pick-up	Short Time Delay	Gnd Fault Pick-up	Gnd Fault Delay
CB 1	_____	_____	_____	_____	_____
CB 2	_____	_____	_____	_____	_____
CB 3	_____	_____	_____	_____	_____
CB 4	_____	_____	_____	_____	_____
CB 5	_____	_____	_____	_____	_____

UPSTREAM UPS DATA

Customer Name _____ Date _____

SRO # _____

DPS Equipment on onsite STS ____, PDM ___, RPP ____, Other _____

UPS Type (Name Brand) _____

KVA Size _____

Three Phase ☐ Single Phase ☐

Commercial ☐ Industrial ☐

Comments:

_____

_____

TAB 6 – WARRANTY

5900 Eastport Blvd., Bldg. V • Richmond, VA 23231-4453 • T: 804.236.3300 • F: 804.236.4040 • www.cyberex.com

THOMAS & BETTS POWER SOLUTIONS
LIMITED WARRANTY AND WARRANTY REGISTRATION

Cyberex and/or United Power

THANK YOU

Thomas & Betts Power Solutions would like to thank you for purchasing Cyberex and/or United Power products. To validate the limited warranty provided with this product and to identify yourself as the original purchaser/end-user entitled to the limited warranty, please register your product(s) online at www.cyberex.com, or call us at **800-559-6441**.

LIMITED WARRANTIES

Thomas & Betts Power Solutions (TNBPS) warrants to the original purchaser/end-user that all Cyberex and United Power products other than TVSS will be free from defects in materials and workmanship for a period of ninety (90) days from the ship date. During such limited warranty period, TNBPS will repair or replace at Thomas & Betts Power Solutions option the product, part, or component (with the same or similar product, part or component) which proves to have a defect in materials or workmanship at the TNBPS manufacturing facility in Richmond, Virginia or at the purchaser/end-user's location.

During such ninety (90) day limited warranty, TNBPS shall bear the costs and expenses it incurs in connection with the diagnosis, repair and/or replacement of the defective product, part, or component including shipping cost to and from the purchaser/end-user's location. All costs and expenses incurred in connection with the removal, handling, and re-installation of the repaired or replaced product shall be borne by the purchaser/end-user. In addition, travel expenses shall be borne by the purchaser/end-user for diagnosis and/or repair by a TNBPS certified technician for products installed outside the continental United States.

TNBPS also warrants to the original purchaser/end-user that TNBPS product(s) will be free from defects in materials and workmanship for a period of one (1) year from the ship date. During such limited warranty period, TNBPS, without charge to the original purchaser/end user, will repair or replace at Thomas & Betts Power Solutions option the product, part or component (with the same or similar product, part or component) which proves to have a defect in materials or workmanship, provided the product, part or component is returned pre-paid, at the cost and expense of the purchaser/end-user, to TNBPS's manufacturing facility in Richmond, Virginia within the limited warranty period. All costs and expenses incurred in connection with the removal, shipment, handling and re-installation of the repaired or replaced part or component, as well as diagnosis, shall be borne by the purchaser/end-user.

At the request of the purchaser/end-user, and at the cost and expense to the purchaser/end-user (at our currently published rates, portal-to-portal), and with reasonable expectation of payment, TNBPS will: (i) provide assistance in the diagnosis, removal, and reinstallation of a repaired or replaced product, part or component; (ii) undertake to repair or replace any product, part or component at a location other than TNBPS's manufacturing facility in Richmond, Virginia.

All warranty services performed Monday through Friday 8:00 A.M. to 5:00 PM (EST), exclusive of Thomas & Betts Power Solutions observed holidays.

Thomas & Betts Power Solutions also warrants to the original purchaser/end-user that all products other than TVSS products, if ***purchased with Factory Start-up Services provided by TNBPS***, will be free from defects in materials and workmanship for a period of one (1) year from the date of factory start-up, not to exceed eighteen (18) months from the ship date.

During such limited warranty period, TNBPS will repair or replace at Thomas & Betts Power Solutions option the product, part, or component (with the same or similar product, part or component) which proves to have a defect in materials or workmanship at the TNBPS manufacturing facility in Richmond, Virginia or at the purchaser/end-user's location.

During such limited warranty, TNBPS shall bear the costs and expenses it incurs in connection with the diagnosis, repair and/or replacement, of the defective product, part, or component including shipping cost to and from the purchaser/end-user's location. All costs and expenses incurred in connection with the removal, handling, and re-installation of the repaired or replaced product shall be borne by the purchaser/end-user. In addition, travel expenses shall be borne by the purchaser/end-user for diagnosis and/or repair by a TNBPS certified technician for products installed outside the continental United States.

The foregoing limited warranties only apply if the product is registered with TNBPS within thirty (30) days after the ship date. The foregoing limited warranties shall not apply if the product, or any parts or components, are modified, tampered with, misused, misapplied, or subjected to abnormal working conditions (including, but not limited to, water, lightning or other overexposure). The limited warranty period for repaired product or replacement product, parts or components will be only the remaining portion of the original limited warranty.

THESE LIMITED WARRANTIES DO NOT GUARANTEE UNINTERRUPTED SERVICE. REPAIR OR REPLACEMENT AS PROVIDED UNDER THESE LIMITED WARRANTIES ARE THE EXCLUSIVE REMEDY OF THE PURCHASER/END-USER. THESE LIMITED WARRANTIES ARE IN LIEU OF ALL OTHER WARRANTIES, EXPRESSED OR IMPLIED, INCLUDING, BUT NOT LIMITED TO, ANY IMPLIED WARRANTY OF MERCHANTABILITY OR FITNESS FOR A PARTICULAR USE OR PURPOSE: ALL OF WHICH ARE HEREBY EXCLUDED AND EXPRESSLY DISCLAIMED. THOMAS & BETTS POWER SOLUTIONS SHALL IN NO EVENT BE LIABLE FOR ANY SPECIAL, INDIRECT, INCIDENTAL, PUNITIVE, OR CONSEQENTIAL DAMAGES OF ANY KIND OR CHARACTER, INCLUDING, WITHOUT LIMITATION, LOSS OF REVENUE OR PROFITS, FAILURE TO REALIZE SAVINGS OR OTHER BENEFITS, LOSS OF DATA OR USE, DAMAGE TO EQUIPMENT AND CLAIMS AGAINST THE PURCHASER/END-USER BY ANY THIRD PERSON, EVEN IF THOMAS & BETTS POWER SOLUTIONS HAS BEEN ADVISED OF THE POSSIBILITY OF SUCH DAMAGES. THOMAS & BETTS POWER SOLUTIONS' TOTAL LIABILITY ON ANY CLAIM MADE AGAINST IT SHALL NOT IN ANY EVENT EXCEED THE PURCHASE PRICE PAID TO THOMAS & BETTS POWER SOLUTIONS FOR THE DEFECTIVE PRODUCT.

WARRANTY SERVICE

To obtain service under this limited warranty, contact Thomas & Betts Power Solutions by telephone at **800-238-5000**, or by mail at 5900 Eastport Boulevard, Richmond, VA 23231.

SUPERSWITCH3™ by CYBEREX®

Installation, Operation and Service Manual

SMARTSWITCH
Digital Static Grid Tie Switch
Type II: 1200 Amps
60 Hz, 3-Phase, 1-Source

Document No.: 94-12-630007
Rev No.: 01
Release Date: 12.07.10

THOMAS & BETTS POWER SOLUTIONS
5900 EASTPORT BOULEVARD, RICHMOND, VIRGINIA 23231-4453
TEL: 800.238.5000 • FAX: 804.236.4040 • WWW.CYBEREX.COM

TABLE OF CONTENTS

TABLE OF CONTENTS 2
1.0 General Information 4
1.1 Introduction 4
1.2 General 4
1.3 Electrical Safety Precautions 4
1.4 Equipment Description - Overview 4
2.0 Installation 5
2.1 Pre-Installation Inspection and Unpacking 5
2.2 Handling 6
2.3 Inspection 6
2.4 Installation Location 6
2.5 Power Connections 7
3.0 Operation and Functional Overview 8
3.1 Introduction 8
3.2 Functionality 8
3.3 Functional Assemblies 9
3.4 Start-up Procedure 9
3.5 Bypassing the SMARTSWITCH 10
4.0 User Control 10
4.1 Overview 10
4.2 Basic System Operation 11
4.3 System/Option Information 15
4.4 Security 16
4.5 Basic System Options and Settings 17
4.6 System Events 22
4.7 Metering 26
4.8 Configuration Settings 29
4.9 Software Upgrades 33
5.0 Functional Description 36
5.1 Introduction 36
5.2 Functional Description of the SMARTSWITCH Circuit Boards 36
5.3 Status and Fault LEDs 40
5.4 Internal Circuit Breakers 41
5.5 Other Assemblies 41
6.0 External Protection 42
7.0 Specifications 42
7.1 Standards 42
7.2 SMARTSWITCH Electrical Characteristics 43
7.3 Environmental Characteristics 43
7.4 Physical and Thermal Properties 43
8.0 System Maintenance 44
8.1 Tightening Torques 44

8.2 Testing the Unit 44
Appendix A-1: Menu Structure Table 46
Appendix A-2: System Events Table 47
Appendix A-3: Metering Table 52
Appendix A-4: Set Points Table 53
Appendix A-5: Modbus Register Map 55
Appendix A-6: PS1 Indicator Table 62
Appendix A-7: FX Display Board LED Indicators Tables 63
Appendix A-8: Main Logic Board LED Indicator Table 64
Appendix A-9: Gate Drive Board LED Indicator Table 67
Appendix A-10: User-Interface Board LED Indicator Table 68
Appendix B-1: PS1 LED Indicators Illustration 69
Appendix B-2: FX Display Board Illustration 70
Appendix B-3: Main Logic Board Illustration 71
Appendix B-4: Gate Drive Board Illustration 72
Appendix B-5: User Interface Board Illustration 73
Appendix B-6: Docking Board Illustration 74
Appendix C-1: Miscellaneous Notes 75

DRAWINGS

D0049512-1-2 SMARTSWITCH OUTLINE
B0049512-1-1 SMARTSWITCH ONE-LINE
D0049512-1-3 SMARTSWITCH WIRING DIAGRAM

1.0 General Information

1.1 Introduction

This manual is provided to aid the user in the installation, operation, and maintenance of the SMARTSWITCH – manufactured by Cyberex, a Thomas & Betts Power Solutions.

1.2 General

SMARTSWITCH is designed for indoor applications only and must be protected from excessive moisture or corrosive environments. The SMARTSWITCH is not intended for use in the presence of explosive gases.

This unit complies with the limits for a Class A digital device in accordance with Part 15, Subpart J of the FCC rules; therefore, it is suitable for use in a commercial environment. If not used in accordance with its design intent, and in accordance with the instructions contained within this manual, SMARTSWITCH may cause interference with radio frequency communications.

1.3 Electrical Safety Precautions

SMARTSWITCH is designed for operation from a three (3) phase, three (3) wire power source or from a three (3) phase, four (4) wire, grounded neutral wye system. (Refer to the unit's nameplate for the specific model designation, operating voltage, and input power configuration.) Input over-current protection is to be supplied by the user in accordance with nameplate ratings.

WARNING: SMARTSWITCH IS DESIGNED TO RECEIVE POWER FROM MORE THAN ONE (1) POWER SOURCE. WHEN ANY OF THE POWER SOURCES IS ENERGIZED, THIS UNIT CONTAINS HAZARDOUS VOLTAGES. HAZARDOUS VOLTAGES EXIST WITHIN THE SMARTSWITCH SWITCH REGARDLESS OF THE MODE OF OPERATION (ACTIVE, IDLE, OR BYPASS). BEFORE MAKING ANY CONNECTIONS TO THE UNIT OR PERFORMING ANY MAINTENANCE, ENSURE THAT ALL POWER SOURCES ARE TURNED OFF AND LOCKED OUT.

AS LETHAL VOLTAGES EXIST WITHIN ALL OPERATING MODES OF THE SMARTSWITCH, MAINTENANCE CAN ONLY BE PERFORMED BY QUALIFIED AND AUTHORIZED TRAINED SERVICE PERSONNEL.

THOMAS & BETTS POWER SOLUTIONS NEITHER RECOMMENDS NOR KNOWINGLY SELLS THIS PRODUCT FOR USE WITH LIFE SUPPORT APPLICATIONS OR OTHER FDA DESIGNATED CRITICAL APPLICATIONS.

ALL WIRING SHOULD BE PERFORMED BY QUALIFIED ELECTRICIANS AND IN ACCORDANCE WITH LOCAL AND NATIONAL ELECTRICAL SAFETY CODES. BEFORE PLACING THE UNIT INTO SERVICE, A THOROUGH INSPECTION AND SUPERVISED START-UP SHOULD BE PERFORMED BY A QUALIFIED TECHNICIAN.

1.4 Equipment Description - Overview

SMARTSWITCH is a solid state, three (3) phase dual position switch, which connects a set of three (3) phase load terminals to a set of three (3) phase input terminals. Six (6) pairs of silicon-controlled rectifiers (SCRs) connected in an AC switch configuration, rated to carry the full load, perform the Connect and Disconnect function of the SMARTSWITCH.

A manually operated maintenance bypass switching and isolating arrangement consisting of Molded Case (up to 1200amps) or Insulated Case (above 1200amps) Switches or Circuit Breakers may be provided to permit isolation of the SCRs and logic elements for servicing without disrupting power to the critical load.

The STS consists of four (4) major assemblies and sub-assemblies:

- Heatsink Assembly
  - Twelve (12) SCRs (6 used, 6 unused)
  - Heatsinks
  - Bus links to each source and the SCR bus
  - Snubber Boards
  - Pre-load resistors
  - Fan assembly

- Control Assembly
  - Control transformers
  - Protective fuses
  - Gate Drive Board
  - Main Logic Board
  - Docking Board
  - Power Supply Board

- Display/Interface Assembly
  - FX Display Module
  - User-Interface Board

- Molded Case Switches/Breakers
  - Three (3) Molded Case (up to 1200amps) or Insulated Case (above 1200amps) Switches for Type II models
  - One (1) Circuit Breaker, Input 1, and two (2) Molded Case (up to 1200amps) or Insulated Case (above 1200amps) Switches for Type III models
  - TVSS module

2.0 Installation

2.1 Pre-Installation Inspection and Unpacking

1) Inspect the SMARTSWITCH and shipping container for any signs of damage or mishandling before removing any packing material or attempting to unload the unit from the truck.

2) Check Shock Indicator located on the outside of unit packaging.

   - If red, note on shipper's receipt and inspect for concealed damage.

   - If damage is observed, file a damage claim with the shipper immediately and contact your Thomas & Betts Power Solutions representative to inform them of the equipment condition and claim.

   - If there is no visible sign of damage or indication of excessive shock, verify the equipment received to the bill of lading. Report any missing or incorrect items to your Thomas & Betts Power Solutions representative immediately.

   - If the unit will be in storage before installation, use the original packing materials or other suitable means to keep the unit clean and to prevent damage. Note: Storage environment to be dry and within the temperature range of -40°C to 70°C (-40°F to 158°F).

2.2 Handling

CAUTION – RISK OF UNIT DAMAGE

EXERCISE EXTREME CARE TO AVOID EQUIPMENT DAMAGE OR INJURY TO PERSONNEL.

DO NOT EXCEED A 15° TILT BY FORKLIFT OR INCLINE RAMP.

NOTE THE LOCATION OF CASTERS AND LEVELING FEET WHEN USING FORKLIFT OR PALLET JACK.

DETERMINE THE UNIT'S WEIGHT AND LOCATE THE CENTER OF GRAVITY SYMBOL BEFORE HANDLING THE CABINET.

1) The unit is bolted to a shipping pallet to allow handling by forklift or pallet jack.
2) Set the packaged unit in a level area with sufficient room for removal from the shipping pallet. Remove external shipping material; locate and remove the bolts at the base of the unit (used to secure unit to the pallet). Using a forklift, raise the unit off the pallet and onto the floor. Ensure the forklift clears the casters and leveling feet.
3) Internally inspect the unit per inspection items listed in Section 2.3 below. NOTE: Regardless of packing, your SMARTSWITCH is not designed to rest on its ends or sides.

2.3 Inspection

1) Verify all items have been received, including spare parts if purchased.
2) Verify model numbers match the numbers shown on your order. Model and serial numbers are located on the inside front door. Record these numbers in the front of this installation manual.
3) Open the doors and interior access panels to check for shipping damage.
4) Check for unsecured components or any loose connections in the cabinet.
5) Check for any unsafe condition that may be a potential safety hazard.
6) Once the inspection has been completed and no problems found, the unit may then be moved to the installation location.

2.4 Installation Location

1) Operating Environment: The SMARTSWITCH unit is designed for indoor installation.
   - Ambient: 0°C to 40°C (32°F to 104°F)
   - Relative Humidity: 0 to 95% Non-Condensing
   - Altitude: 6000 Feet (1800 meters)
2) SMARTSWITCH requires either front and side or front and rear access for installation and maintenance. Adequate space is required above the unit for conduit. Top entry/exit and ventilation is required (see Section 2.4.4 for clearances).

   Either top or bottom cable entry/exit within the same unit is provided as a standard feature. Bottom cable entry/exit requires sufficient cable bending space below the unit and must be provided by means of a raised floor or floor stands.

See Outline drawings D0049512-1-2 in Appendix (Tables/Drawings) for specific model dimensional data.

3) Leveling and Anchoring

SMARTSWITCH incorporates integral casters and leveling feet. Adjust the leveling feet (located at each corner) after final positioning to level and stabilize the unit to the floor. SMARTSWITCH can be anchored to a concrete floor (or floor stands) via an optional Floor Anchor kit (consult factory).

4) Recommended Minimum Service Clearances

Service clearance is required at the front and either side or rear, depending on installation. The minimum service clearance is 36 inches (91.4cm) at the front and either side or rear (depending on installation). Clearance of 20 inches (50.8cm) is required at the top for ventilation.

2.5 Power Connections

The labels shown below will be placed throughout the enclosure to identify potentially dangerous areas that require extra safety precautions during equipment installation.

CAUTION – RISK OF UNIT DAMAGE

WARNING – RISK OF ELECTRIC SHOCK

VERIFY INPUT AND CONTROL CIRCUITS ARE DE-ENERGIZED BEFORE MAKING ANY CONNECTIONS INSIDE THE UNIT.

EXERCISE EXTREME CARE TO AVOID EQUIPMENT DAMAGE OR INJURY TO PERSONNEL.

Power and control wiring must comply with the NEC and applicable local codes. A qualified electrician must install any wiring.

SMARTSWITCH is designed for operation with three (3) or four (4) wire solidly grounded sources only.

1) Bus bars (to accommodate standard NEMA two [2] hole lugs) are provided internal to the unit for input and output power connections and, depending on installation, are accessible from the side or rear. Cable entrance/exit is from either the top or bottom of the unit via removable conduit plates.

Bus bars are provided internal to the unit for ground and neutral connections. Input and output power connections must include an equipment grounding means as required by NEC and local codes.

Each input and output power feed should include an insulated ground conductor sized per NEC based on the upstream over-current protection device.

The common source neutral must be connected to SMARTSWITCH for operation from a four (4) wire power source. This unit is designed to operate from a power source with a phase rotation of A-B-C. Both sources of power to SMARTSWITCH must be within the phase tolerance window, normally $\pm$15 degrees for best operation.

CAUTION – IMPROPER PHASE ROTATION

MAY CAUSE LOSS OF THE CRITICAL LOAD

See Outline drawings D0049512-1-2 in Appendix (Tables/Drawings) for specific model connection details.

After completion of installation and connections, clean the equipment carefully to remove any debris, wire strands, etc., which may have accumulated.

2) Connections for External Wiring Connected to the SMARTSWITCH

Use lugs consistent with applicable codes. Check bolted joints for tightness. Always use two (2) wrenches when tightening connections to prevent distortion or damage. Reference Section 8.1 for torque specifications.

WARNING

WARNING - DO NOT TIGHTEN THE BOLTS ON HEATSINK SCR CLAMPS.

3.0 Operation and Functional Overview

3.1 Introduction

The SMARTSWITCH is designed to support Micro Grid technology. Micro Grid is defined as the customer's system grid that contains distributed generation (DG) and feeders with connected critical load.

The SMARTSWITCH will separate critical load, which have connected DG, from the utility grid during system disturbances. The SMARTSWITCH will automatically reconnect the critical load and DG back to the utility grid when the utility system is within tolerance.

This section will provide a brief functional description for each of the key assemblies that comprise the SMARTSWITCH.

3.2 Functionality

A three (3) phase SMARTSWITCH consists of three (3) pairs of SCRs (silicon controlled rectifiers) connected in a three (3) pole configuration. Each SCR is controlled by the SMARTSWITCH logic to separate the critical load and DG from the utility grid or reconnect the critical load and DG to the utility grid.

The SMARTSWITCH shall open the SCR's in four basic categories:

- IEEE 1547 protection. The principle function include under/over voltage, under/over frequency and unintentional islanding protection. Voltage set points, frequency set points and clearing time shall be field settable per IEEE 1547. With no programmed time delay, the total response time shall be less than 20 msec.
- Power quality function. This function has an adjustable over and under RMS voltage level with an adjustable response time delay. With no delay, the total response time shall be less than 20 msec.
- Fault protection functions for zero and negative sequence fault currents; phase instantaneous over currents and phase time over currents. The protection level shall be filed settable.
- The SMARTSWITCH shall accept the following external open commands.
    - External open command with no delay from SCADA system
    - External open command with no delay from backup protection relay
    - External open command with adjustable delay from external transfer trip signal

The input and output circuit breakers shall open if the SCR's do not open within two cycles of being commanded to open.

The SMARTSWITCH shall close the SCR's only when the voltage and phase difference across the SCR's is near zero provided the systems on both sides of the SCR's are within normal range. The close command function shall have an adjustable delay between the utility system becoming normal and the initiation of the close command.

3.3 Functional Assemblies

The SMARTSWITCH contains the following functional assemblies:

- Power stage
- Circuit breakers
- Main Logic
- Gate Control Logic
- Display
- User-Interface

For more details on these and other assemblies within the SMARTSWITCH, refer to Section 5.6 (Other Assemblies).

3.4 Start-up Procedure

For first time operation, the steps below must be followed:

1) Before closing the external input breakers, measure the voltage of the utility. The voltages must be within the safe operating limits for the SMARTSWITCH to be energized.

2) Ensure phase rotation is the same for DG and utility grid.

3) Verify the potential between Phase A (utility grid) and Phase A (DG) is less than 10 Volts. (The same is true for equivalent phases of both sources.)

4) Ensure the chosen breakers or fused disconnects upstream of the SMARTSWITCH provide the required protection.

5) All circuit breakers within the SMARTSWITCH must be open. Control power fuses (FB1-A, FB2-A, and FB3-A) on the fuse panel must be open. **Note:** For 1200A (480VAC) **also** remove both FB4-A and FB5-A

6) Verify key switches SW1 and SW2 are in the correct positions. SW1 shall be in "Disconnect" position. SW2 shall be in "Local" position.

7) Close the upstream breaker, which applies power to Source 1 of the SMARTSWITCH.

8) Insert FB1-A on the fuse panel (located above circuit breaker section) within the SMARTSWITCH. This will energize the logic of the SMARTSWITCH and the display. [Note: The cabinet door on the breaker side must be open to access these fuses.]

9) Close Load A breaker to connect the SMARTSWITCH to the DG and critical load.

10) Insert FB2-A and FB3-A, FB4-A (as applicable) and FB5-A (as applicable) on the fuse panel within the SMARTSWITCH. Review all operational parameters.

11) Close S1 Input breaker.

12) Rotate key switch SW1 to "Connect" position.

13) The SMARTSWITCH logic will automatically turn on the SCR's to connect DG to the utility grid, only when the voltage and phase difference across the SCR's is near zero provided both DG and utility are within normal range.

14) The critical load and DG are now tied to the utility grid through the SMARTSWITCH.

15) Using the display, select the appropriate menu that will guide you through completion of the next desired function.

3.5 Bypassing the SMARTSWITCH

The SMARTSWITCH CANNOT automatically switch to bypass mode when there is a component failure within the SMARTSWITCH which prevent the switch function as desired.

Before attempting to manually bypass the SMARTSWITCH, it is necessary to determine the resulting function. If the SMARTSWITCH is down for maintenance, it may not be able to shunt trip the bypass breaker when the critical load and DG need to be disconnected from the utility grid.

This procedure is intended for manual bypassing only.

3.5.1 Bypass Critical Load and DG to Utility Grid

1. Verify both DG and utility are within "normal range", provided the voltage and phase difference of the DG and utility is near zero
2. Unlock the S1 BYPASS CB and close.
3. Verify S1 INPUT CB and LOAD A CB shunt trip. If these CB's do not shunt trip, manually open them.
4. Isolate the SMARTSWITCH, Remove FB1-A, FB2-A and FB3-A. **Note:** For 1200A (480VAC) **also** remove both FB4-A and FB5-A.

Return to Normal Operation

1. Verify FB1-A, FB2-A and FB3-A, FB4-A (as applicable) and FB5-A (as applicable) are inserted and LCD is on. Verify no anomalies in event log.
2. Close LOAD A CB.
3. Close S1 INPUT CB.
4. Verify that SCR's are gated on prior to continuing.
5. Open and lock S1 BYPASS CB.

4.0 User Control

4.1 Overview

4.1.1 Control Panel

The Control Panel includes an LCD display screen, an alarm LED indicator, a keypad, and an audible alarm, as shown below in Figure 4.1-1.

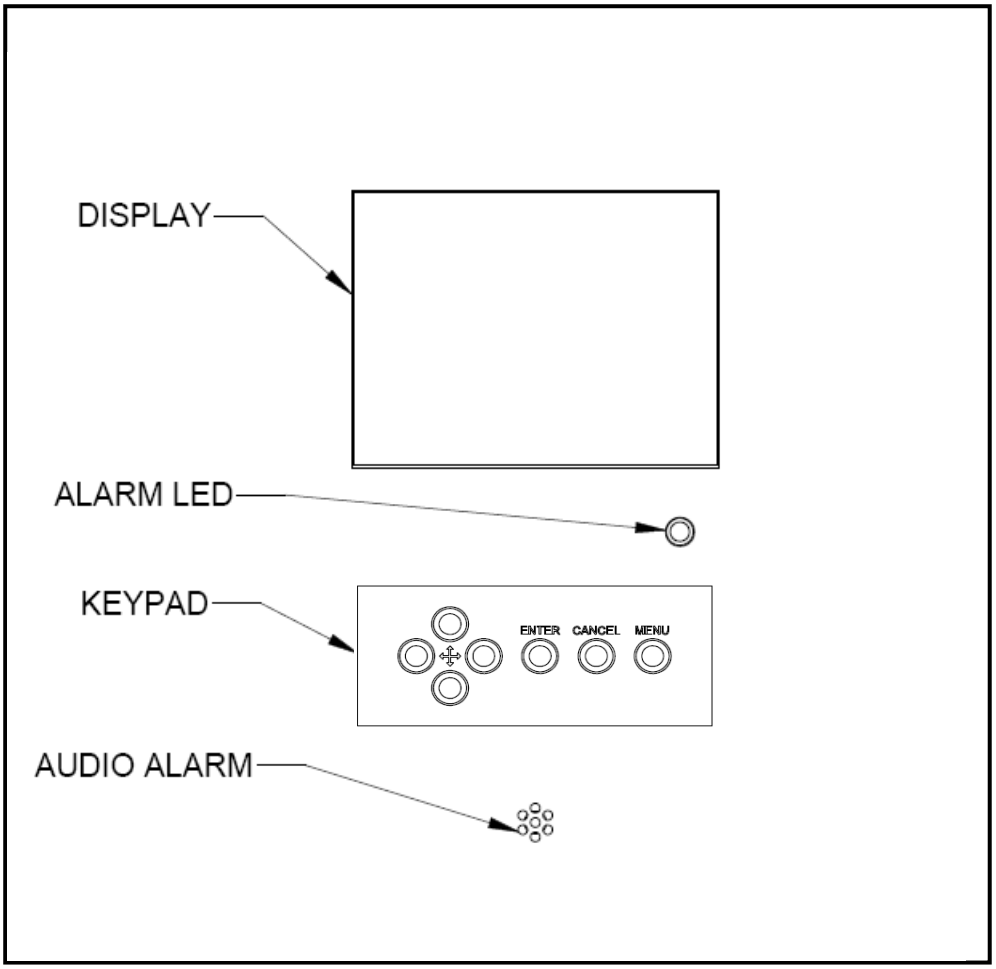

Figure 4.1-1: SMARTSWITCH Control Panel

4.1.2 Graphical User-Interface

The graphical user-interface is designed to operate similar to traditional Windows™ and MacOS™ interfaces. The four navigation buttons on the left-hand side of the keypad are used to select objects on the screen. When a selection is made, the object's appearance changes by color, highlighting, or encircling. To activate the selection, the user must press the Enter button.

The basic system objects that require user interaction are menus, buttons, radio buttons, checkboxes, dropdown boxes, and dialog boxes. System commands are covered in detail throughout this manual. Generally, after making changes on the various screens shown below, you then must select the 'OK' button to save the new settings, or select the 'Cancel' button to cancel the new changes.

4.2 Basic System Operation

4.2.1 Status Overview

When the system is powered up, the initial GUI (LCD) screen displays a general overview of the operation of the unit as shown below in Figure 4.2-1. Note the status icon, which appears between the "In Breaker" and "Out Breaker". Table 4.2-1 below shows the possible status icons and messages that may appear on this screen.

Also note below in Figure 4.2-1 that the circuit breaker icons show the present state of the breakers. Table 4.2-2 below shows the icons representing the two possible states for the circuit breakers.

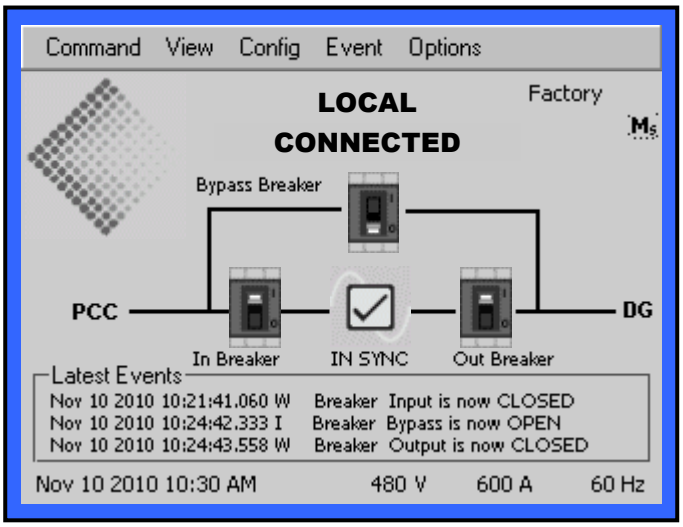

Figure 4.2-1: Initial GUI Screen

Table 4.2-1: System Status Messages and Icons

Message	Icon	Description
DISCONNECTED		The static switch is disconnected.
READY TO CONN		The static switch is ready to connect.
CONNECTED		The static switch is connected.

Table 4.2-2: Circuit Breaker Icons

Icon	Description
	The breaker is open.
	The breaker is closed.

The following additional information also appears on this screen:

- **System Events**: The last three (3) events are shown.
  Note: To view or manipulate the event log, the user must access the Event menu.
- **Date and Time**
- **Unit Identification**: Includes the unit's hostname, voltage, frequency, and current ratings.

4.2.2 GUI Menus

As can be seen above in Figure 4.2-1, there are five (5) “high” level menus items on the menu bar, which are grouped by functions, as follows.

Command Menu: Contains functions required to command the switch to perform certain functions.

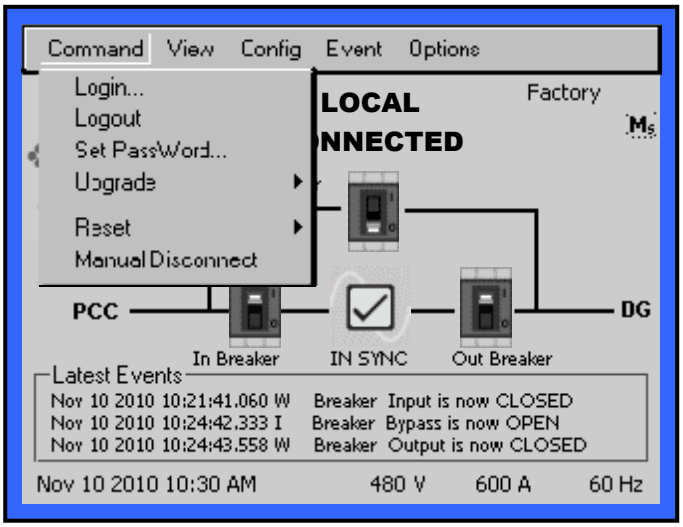

Figure 4.2-2: Command Menu

View Menu: Allows viewing of configuration, status, and metering information.

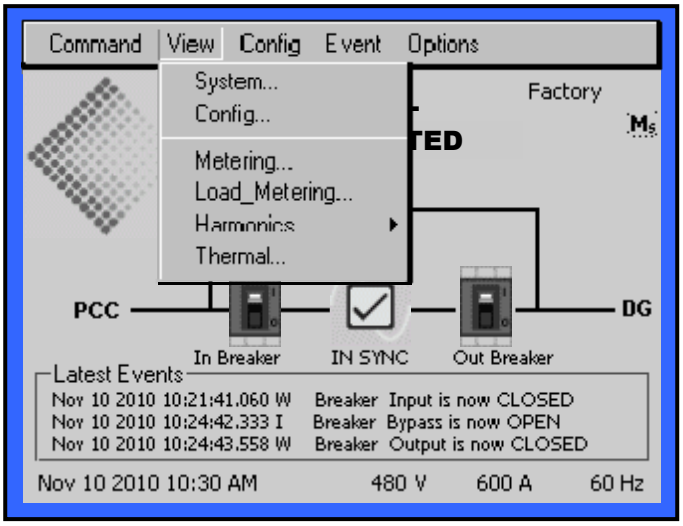

Figure 4.2-3: View Menu

Config Menu: Contains menu items for configuring the parameters that define the operation of the system. Note that most of this functionality is not available when security is enabled. (See Section 4.3 for more details.)

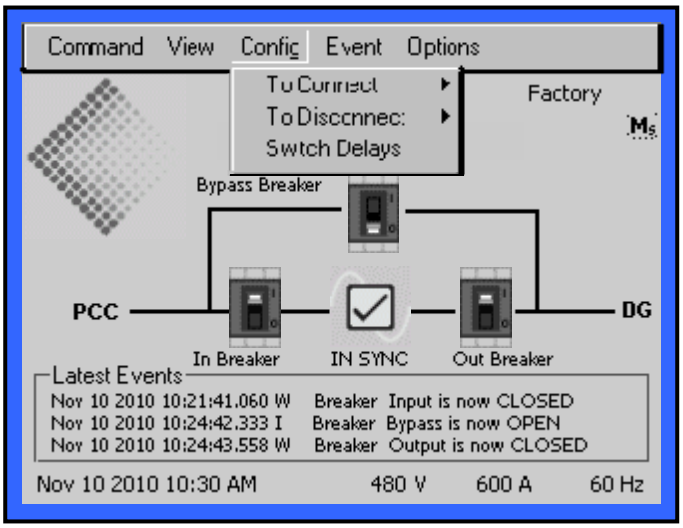

Figure 4.2-4: Config Menu

Event Menu: Contains items required for viewing and manipulating the event log. (Note that some of these functions are not available until individual events are selected.)

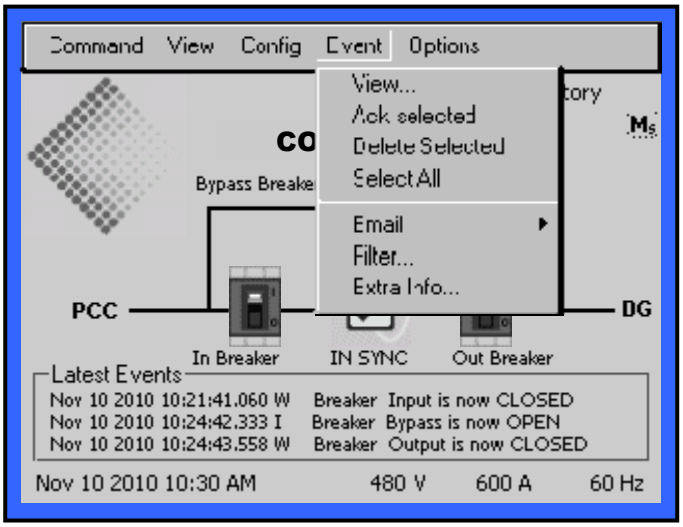

Figure 4.2-5: Event Menu

Options Menu: Contains items for changing the parameters that define the operation of the system. Note that most of this functionality is not available when security is enabled. (See Section 4.3 for more details.)

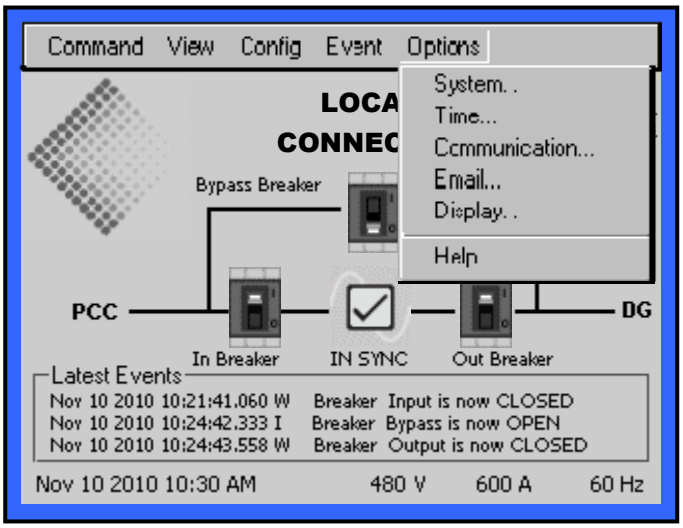

Figure 4.2-6: Options Menu

Appendix table A-1 provides an exploded view of the available menus.

4.3 System/Option Information

The basic system information and options can be viewed on the following two windows in this section.

4.3.1 System Information Window

The System Information window is shown below.
To open this window, select View >> System on the menu bar.

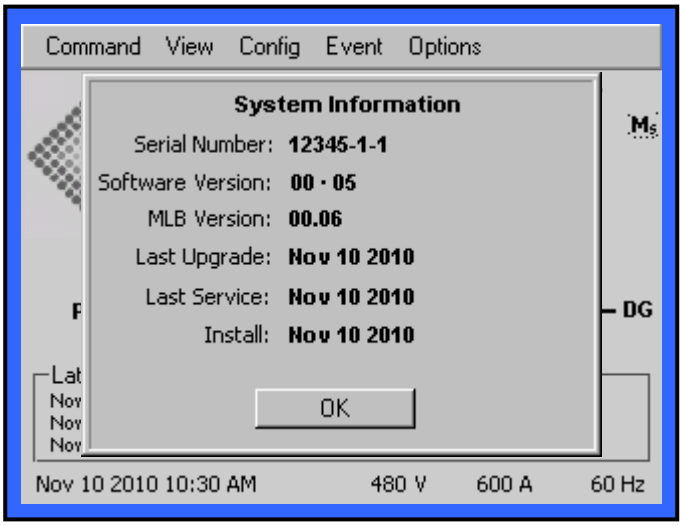

Figure 4.3-1: System Information Window

4.3.2 Option Information Window

The Option Information window is shown below.
To open this window, select View >> Config on the menu bar.

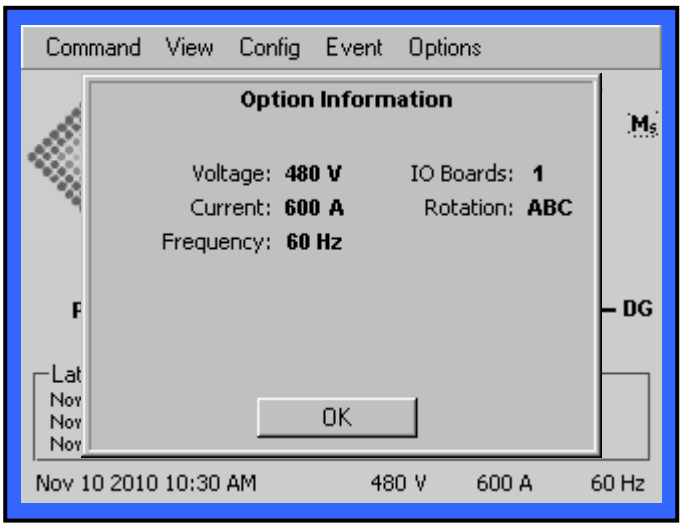

Figure 4.3-2: Option Information Window

4.4 Security

4.4.1 Overview

The unit maintains six (6) security levels and requires a password based on functionality. The following table describes the security levels.

Table 4.4-1: Login Levels

Level	User	Function
0	default	Permits monitoring of operating status and parameters. No password required.
1	user	Permits operation of the product. Password protected.
2	admin	Permits setup and configuration. Password protected.
3	service	Permits setup, configuration, and software upgrades. Password protected.
4	manufacture	For factory use. Password protected.
5	super	For developers use. Password protected.

4.4.2 Login

To log in, select Command >> Login on the menu bar. The 'Security Login' window will then open as shown below. In the 'Security Login' window, select the User Name and Password, and then select the OK button using the navigation buttons on the keypad.

Figure 4.4-1: Security Login Window

4.4.3 Logout

To log out of the current security level, select Command >> Logout on the menu bar. When this is done, the GUI will be in the lowest (default) security level.

4.4.4 Changing Passwords

To change a password, you must be logged in to Level 1 (user) or higher. To change a password, select 'Command >> Set PassWord' on the menu bar. The 'Set Password' window will then open as shown below. In the 'Set Password' window, select the User Name, Old Password, New Password, and then select the OK button using the navigation buttons on the keypad.

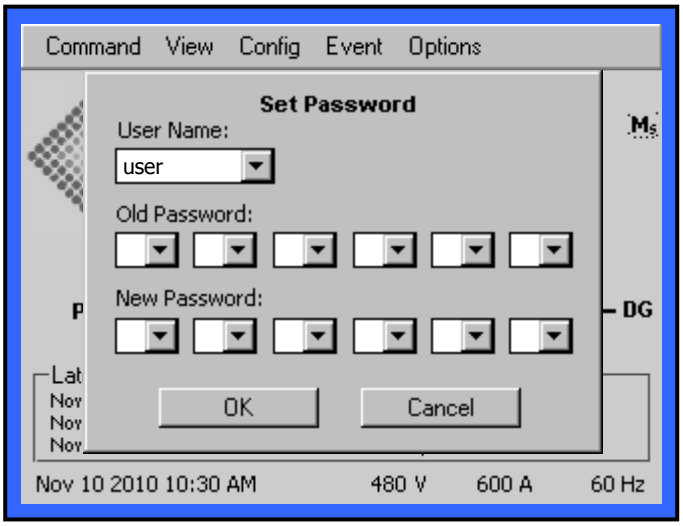

Figure 4.4-2: Set Password Window

4.5 Basic System Options and Settings

The basic options and settings can be configured using the menu items in the Options menu as follows. You must be logged in to Level 2 (admin) or higher to access the windows addressed in this section.

4.5.1 System Configuration

The following items can be enabled/disabled on the System Configuration window as shown in Figure 4.5-1 below. To access this window, select Options >> System on the menu bar. You must be logged in to Level 2 (admin) or higher to access this window.

- Audible Alarm
- Security
- Auto Re-Connect Disable
- Remote Trip Enable

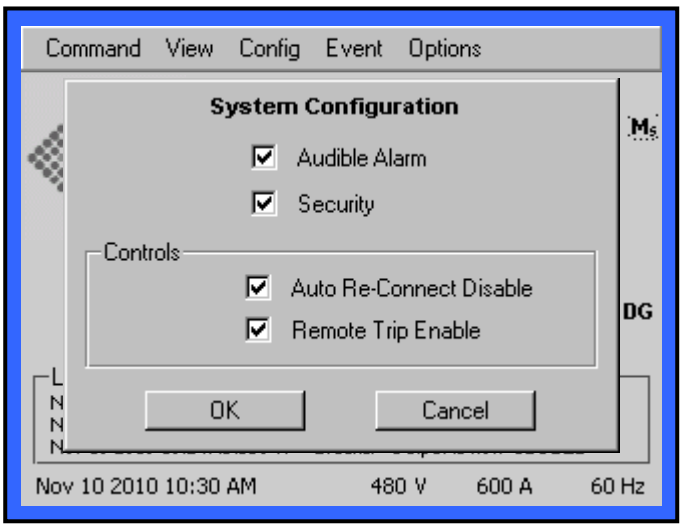

Figure 4.5-1: System Configuration Window

4.5.2 Time and Date Configuration

The time and date can be set on the Time & Date Configuration window as shown in Figure 4.5-2 below. To access this window, select Options >> Time on the menu bar. You must be logged in to Level 2 (admin) or higher to access this window.

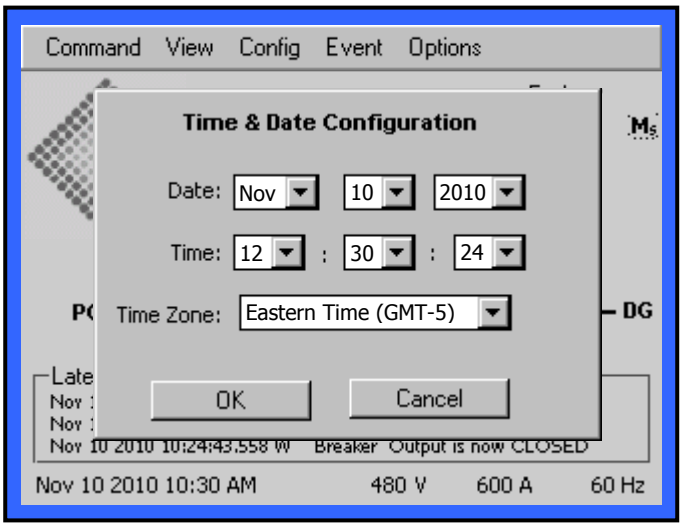

Figure 4.5-2: Time & Date Configuration Window

4.5.3 Access Configuration

The following table lists the available interfaces and their configuration parameters.

Table 4.5-1: Available Protocols and Settings

Interface	Description	Configuration Parameters	References
Email	Not currently available.	N/A	N/A
Telnet	Remote command-line interface for Thomas & Betts Power Solutions use.	IP Address IP Gateway Subnet Mask	Figure 4.5-4
Web	Not currently available.	N/A	N/A
SNMP	Not currently available.	N/A	N/A
Modbus TCP	Modbus protocol over the Ethernet interface.	IP Address IP Gateway Subnet Mask	Figure 4.5-4
		Client #1 IP Address Client #2 IP Address Unit ID	
Modbus RS-485	Modbus protocol over the RS-485 interface.	Baud Rate Stop-Bits Parity Unit ID	

The Access Configuration window (shown below) is used to enable or disable the various interfaces and protocols listed above in Table 4.5-1. To open this window, select Options >> Communications on the menu bar. You must be logged in to Level 2 (admin) or higher to access and change settings in this window. Note that changing the state of an interface will require a reboot of the display before the actual interface changes states.

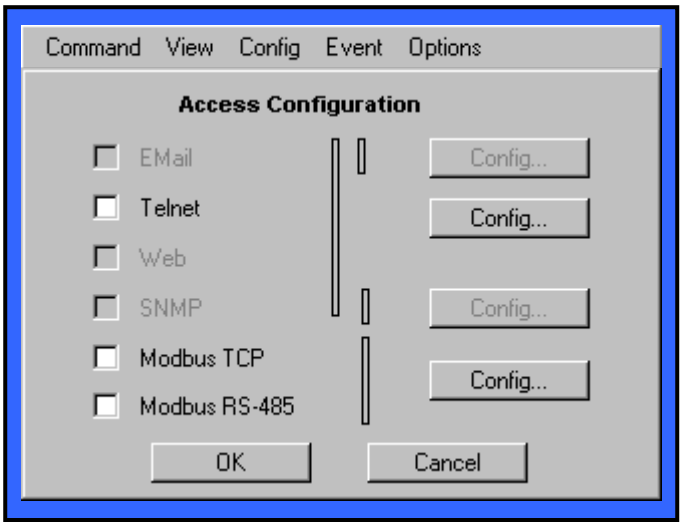

Figure 4.5-3: Access Configuration Window

4.5.3.1 Ethernet and TCP/IP Configuration

Setup of the TCP/IP parameters (IP Address, Gateway, and Subnet Mask) may be required to use the Telnet and Modbus TCP functions. These parameters can be configured in the TCP/IP Configuration window shown below.

Note that the unit uses only static IP addresses.

The 'Hostname' can also be set in this window. The 'Hostname' appears near the upper right-hand corner of the initial GUI screen as can be seen in Figure 4.2-1 above. This parameter can be set even if the unit is not on an Ethernet network.

To open the TCP/IP Configuration window, select the second "Config" button (from the top) on the Access Configuration window (shown above in Figure 4.5-3).

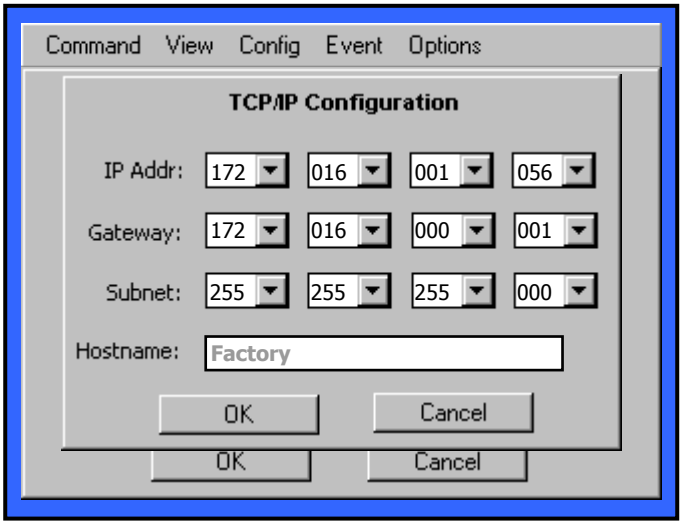

Figure 4.5-4: TCP/IP Configuration Window

4.5.3.2 Modbus Configuration

The Modbus related parameters are configured in the Modbus Configuration window shown below. To open this window, select the lower "Config" button in the Access Configuration window (shown above in Figure 4.5-3).

See Table 4.5-1 (Available Protocols and Settings) above for more guidance.

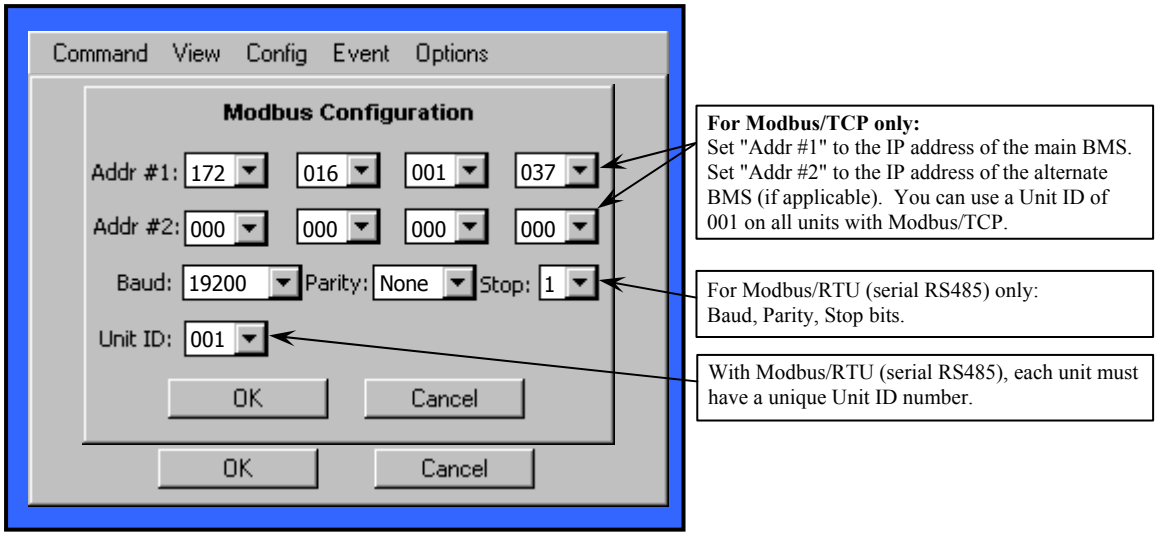

Figure 4.5-5: Modbus Configuration Window

4.5.4 LCD Contrast Configuration

The LCD display contrast level can be adjusted on the LCD Contrast window as shown in Figure 4.5-6 below. To access this window, select Options >> Display on the menu bar. You must be logged in to Level 2 (admin) or higher to access this window.

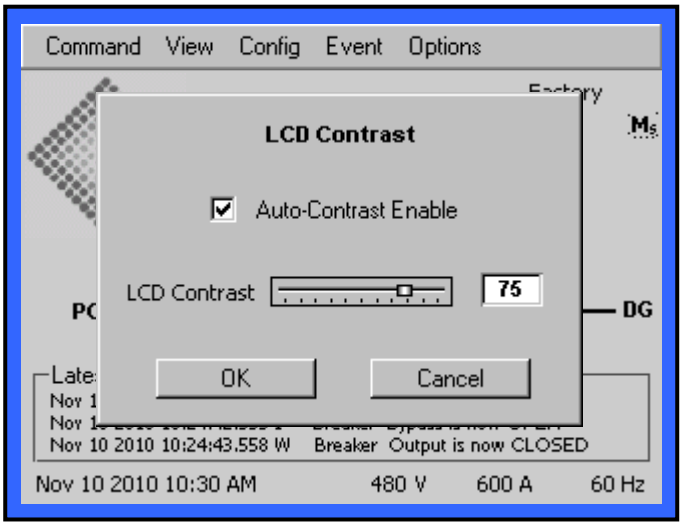

Figure 4.5-6: LCD Contrast Window

4.6 System Events

4.6.1 Overview

System events are logged in the Event Log. Each event contains the following attributes:

- Timestamp
- Severity of Event (I = Informational, W = Warning, A = Alarm)
  - Informational: Notifies user that a harmless event has taken place on the system. These events may include system startup, system upgrade, preferred source set, etc.
  - Warning: Notifies user of a potential future problem on the system. These events include high voltage, high current, etc.
  - Alarm: Indicates a critical issue on the system including component failure, etc.
- Active State
- Acknowledgement State
- Event Description

Some types of events remain active in the event log as long as the cause of the event remains active and become inactive afterwards. For example, an event triggered by a metered value that exceeds a high limit will remain active until that data value falls back below the high limit.

Some types of alarm/warning events also require acknowledgement from the user after they become inactive. This will be discussed below. Other types of alarm/warning events do not require acknowledgement.

Note that the Email feature (which appears on the Event submenu) is not currently available.

4.6.2 Viewing Events

The events can be viewed in the Event Log window. To access this window, select Event >> View on the menu bar. An example screenshot of the Event Log window is shown below in Figure 4.6-1.

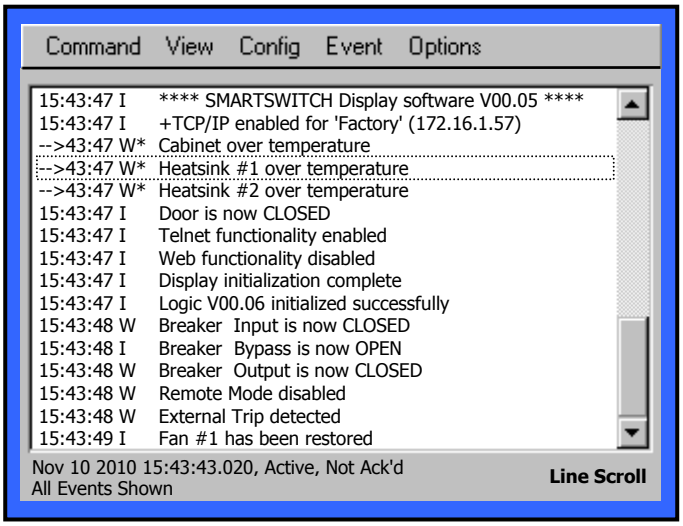

Figure 4.6-1: Event Log Window

Each event is represented by a text line on the Event screen with the attributes listed above. The following symbols are used in the event log display to convey the following attributes:

*	An asterisk indicates the event is active.
-->	An arrow indicates the event requires acknowledgement.
+	A plus sign indicates extra information is stored with an event.

Examples:

The following event will appear in the event log if there is an active "Heatsink #1 Over Temperature" condition.

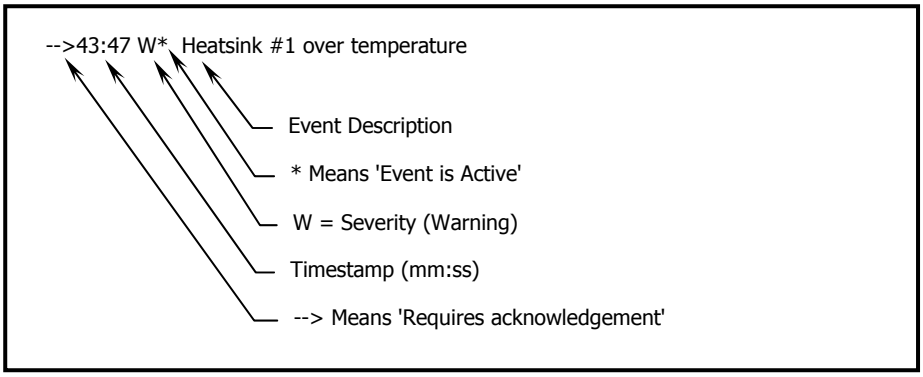

Figure 4.6-2: Active Warning Event Example

If the over-temperature condition (above) goes away, the following event will appear in the event log. Also, the asterisk (active event marker) in the previous event (above) will disappear, but the arrow (requires-acknowledgement marker) will remain until the event is acknowledged by the user.

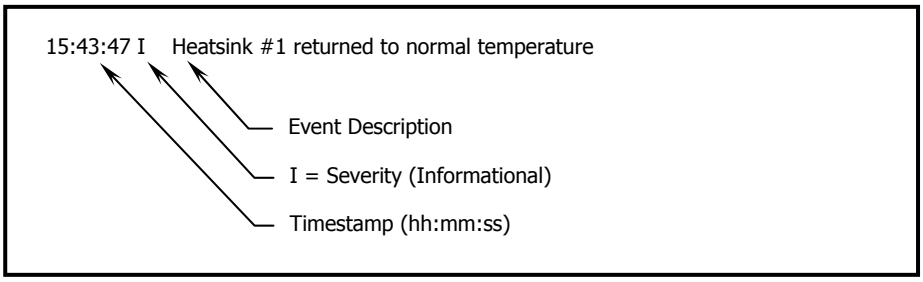

Figure 4.6-3: Informational Event Example

4.6.3 Acknowledging Events

To acknowledge events, you must be logged in to Security Level 2 (admin) or higher. The user has the choice to acknowledge events individually, or to acknowledge all events at once as follows.

4.6.3.1 Acknowledging Individual Events

1) With the event log showing on the LCD, use the navigation (up/down) buttons to highlight the event to be acknowledged. The "highlighted" event will be surrounded by dotted lines as shown in the example below.

```
-->43:47 W*  Heatsink #1 over temperature
```

2) Select the "highlighted" event by pressing the Enter button. The selected event will appear as shown in the example below.

```
-->43:47 W*  Heatsink #1 over temperature
```

3) The event can be unselected by pressing the Enter key again. You can select multiple events in this manner.

4) To acknowledge the selected events, press the menu button and select Event >> Ack Selected on the menu bar as shown in the following screenshot example.

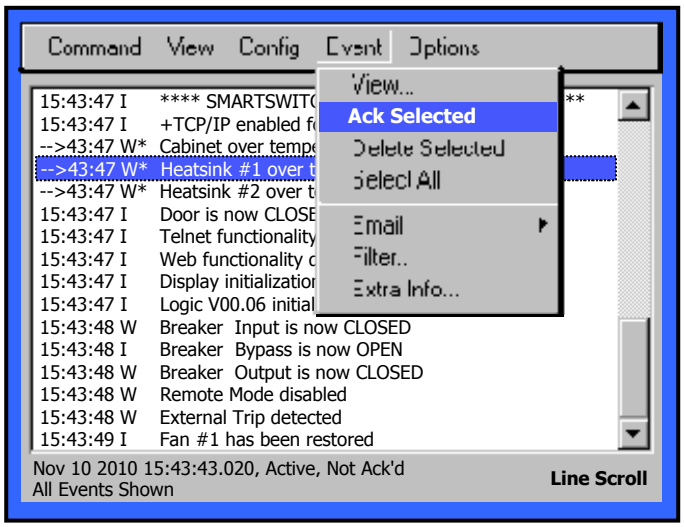

Figure 4.6-4: Acknowledging an Individual Event

4.6.3.2 Acknowledging All Events at Once

1) With the event log showing on the LCD, press the menu button and select Event >> Select All on the menu.

2) Press the menu button again and select Event >> Ack Selected on the menu bar as shown in the following screenshot example.

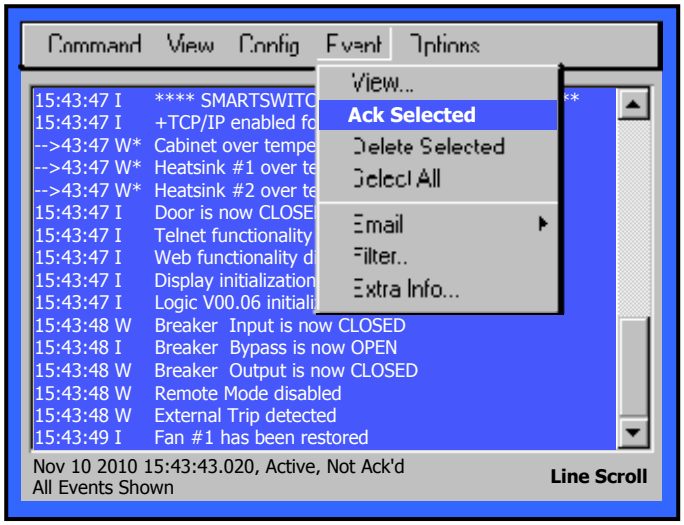

Figure 4.6-5: Acknowledging All Events

4.6.4 Deleting Events

To delete events in the event log, you must be logged in to Security Level 2 (admin) or higher. Note that when deleting events, you may lose important information needed for troubleshooting issues.

As with 'Acknowledging Events' (shown above in Section 4.6.3), the user has the choice to delete events individually or all at once. To delete events, follow the procedures shown above for 'Acknowledging Events', but on the final step, select "Event >> Delete Selected" instead of "Event >> Ack Selected".

4.6.5 Viewing Extra Info

Some events contain more information than visible with the one (1) line entry in the event log window, which may be essential in explaining the cause of the event. These events are annotated by a plus sign (+) at the beginning of the text description. To view this "Extra Info" for an event, select the event (as shown above in Section 4.6.3.1) and then select Event >> Extra Info on the menu bar.

4.6.6 Filter Data

Viewing large event logs may be cumbersome and may require that irrelevant data be filtered. Viewed events can be filtered by start date, end date, severity, and acknowledgement state by using the Event Filtering window shown below in Figure 4.6-6. To open this window, while the Event Log window is open, select Event >> Filter on the menu bar.

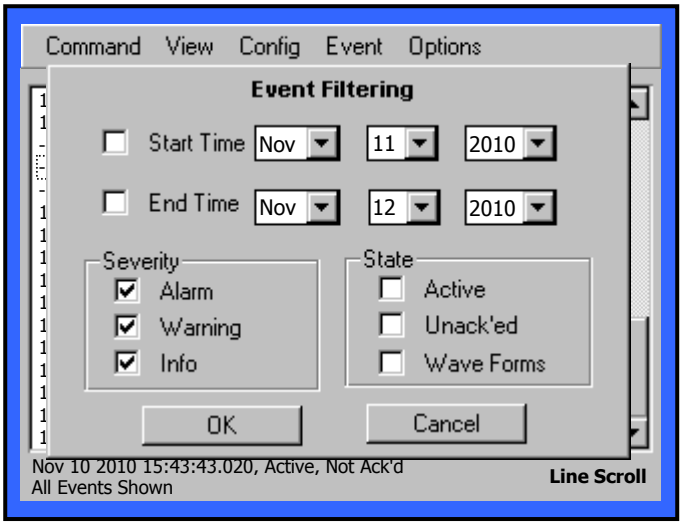

Figure 4.6-6: Event Filtering Window

Note: If a time criterion is used, the Option menu allows the user to enter the exact date. The entered date will be saved, even if the criterion is not enabled; however, it will not be used. A disabled start date assumes the first available date in the event log. A disabled end date assumes the last available date in the event log.

The text description at the bottom of the viewed log describes any filters present on the displayed events.

4.6.7 System Event Table

For a complete list of System Events, see Appendix A-2.

4.7 Metering

The unit displays a variety of metering information to help diagnose power source problems and confirm the integrity of the power generated by the unit. Items metered include Power, Peaks, Voltages, Currents, Phase, and Thermal. The following are examples of metering information displays. See Appendix Table A-3 for metered variables.

4.7.1 Metering Window

The Metering window is shown below.
To open this window, select View >> Metering on the menu bar.

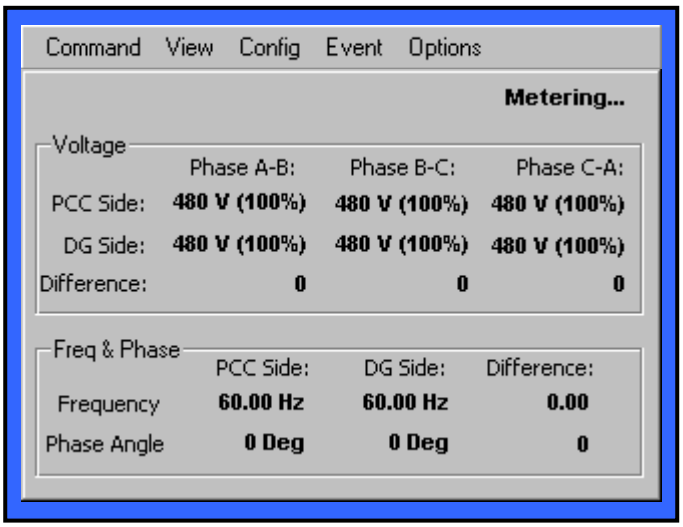

Figure 4.7-1: Metering Window

4.7.2 Load_Metering Window

The Load_Metering window is shown below.
To open this window, select View >> Load_Metering on the menu bar.

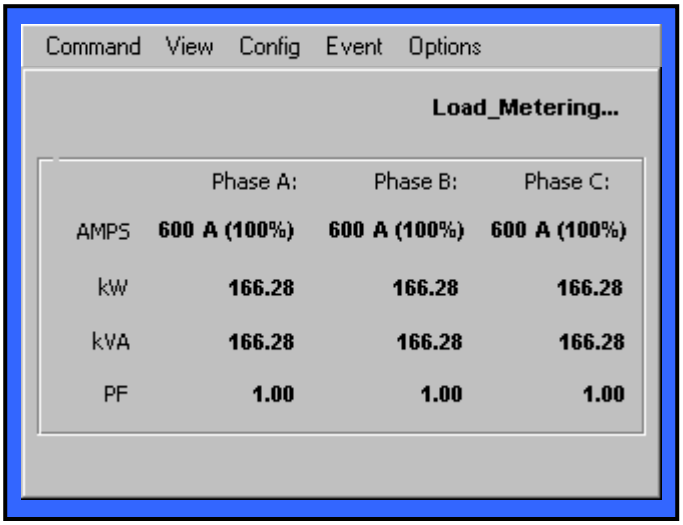

Figure 4.7-2: Load_Metering Window

4.7.3 Harmonic Analyzer Windows

The Harmonic Analyzer windows are shown below.
To open these windows, select View >> Harmonics >> PCC and View >> Harmonics >> DG on the menu bar.

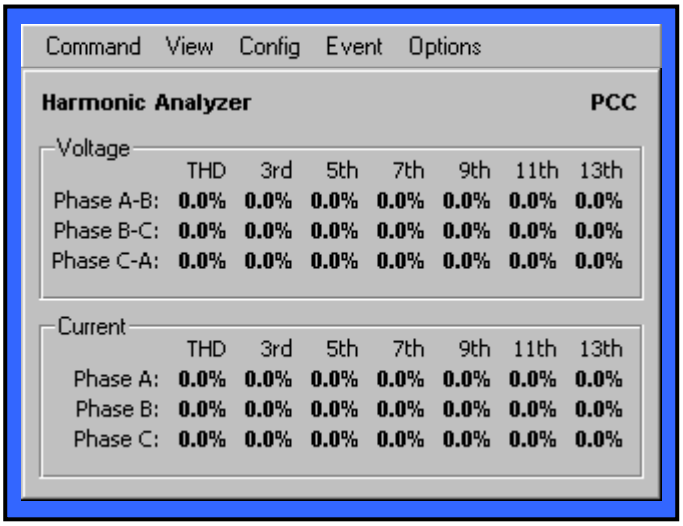

Figure 4.7-3: PCC Harmonic Analyzer Window

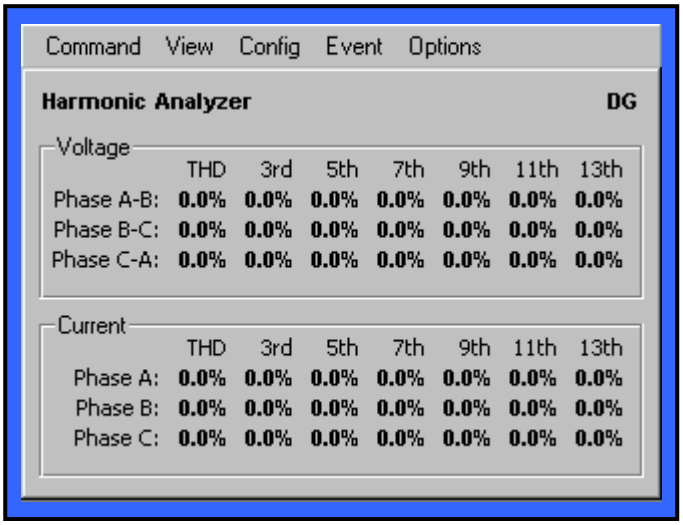

Figure 4.7-4: DG Harmonic Analyzer Window

4.7.4 Thermal Window

The Thermal window is shown below.
To open this window, select View >> Thermal on the menu bar.

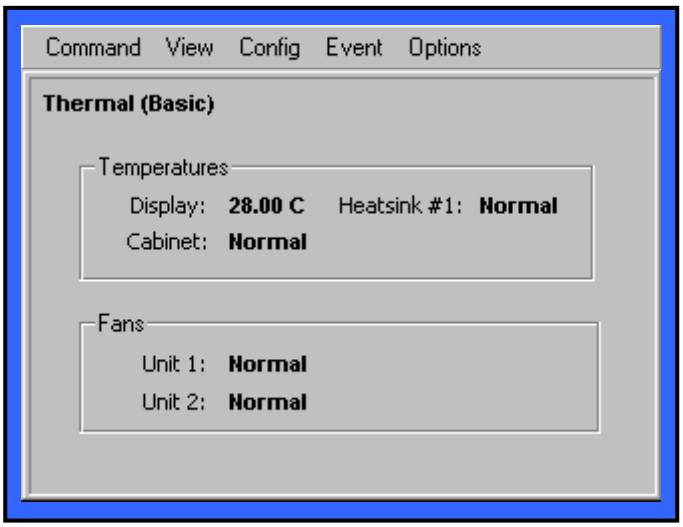

Figure 4.7-5: Thermal Window

4.8 Configuration Settings

The Configuration Settings in this section are accessed by selecting the menu items under 'Config' on the menu bar. These windows can be opened for viewing at any security level, but you have to be logged in to Level 1 (user) or higher to change the settings on the windows.

To change settings on the windows in this section, use the following procedure.

1) Navigate to the specific slider control using the up/down navigation buttons.
(Each slider will become sequentially highlighted.)

2) Select the highlighted slider by pressing the Enter button one time.

3) Change the value of the selected slider using the left/right navigation buttons.
(Note: Values can only be set to predefined increments to an absolute maximum and minimum.)

4) Select the new value by pressing the Enter button one time.

5) Change additional setting by following the previous steps.

6) When finished changing values on the window, to save the new settings and close the window, navigate to the OK button (using the up/down navigation buttons) and press the Enter button. To cancel the new settings and close the window, navigate to the Cancel button and press the Enter button. (To cancel and close the window, you can also press the Cancel button on the keypad.)

Note: Setpoints are automatically saved when the user activates the “OK” button on any dialog. If a power failure occurs, the last saved Setpoints are resorted on power up.

4.8.1 Sync Check to Connect Window

The "Sync Check to Connect" window is shown below.
To open this window, select Config >> To Connect >> Sync Check on the menu bar.

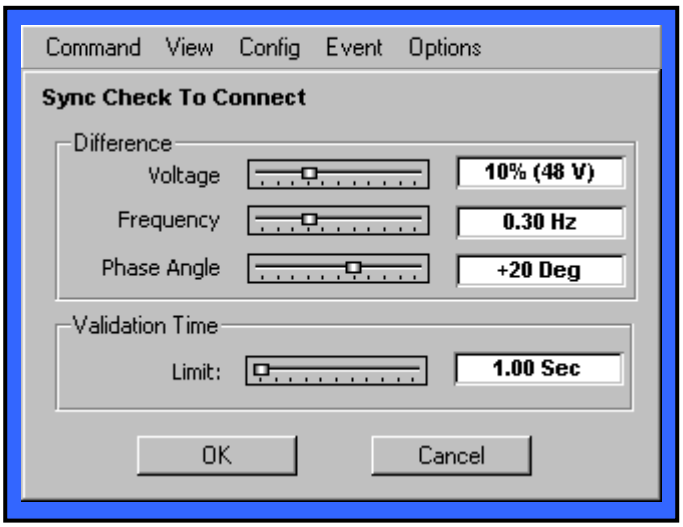

Figure 4.8-1: Sync Check to Connect Window

4.8.2 PQ Check to Connect Window

The "PQ Check to Connect" window is shown below.
To open this window, select Config >> To Connect >> PQ on the menu bar.

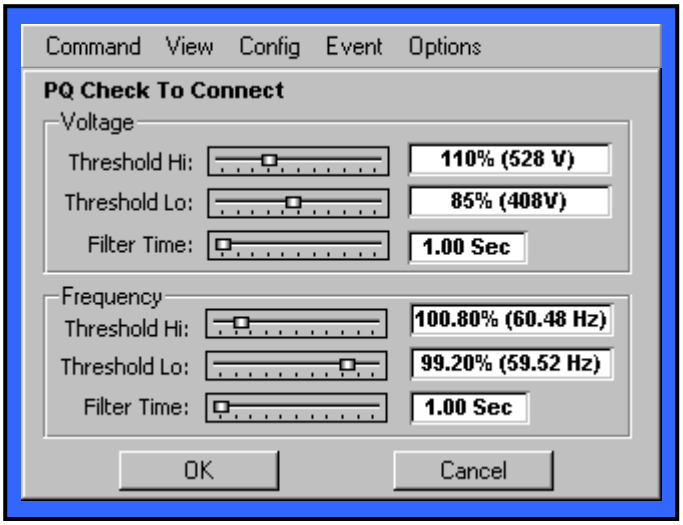

Figure 4.8-2: PQ Check to Connect Window

4.8.3 PQ Check to Disconnect – UV Window

The "PQ Check to Disconnect – UV" window is shown below.
To open this window, select Config >> To Disconnect >> PQCheck UV on the menu bar.

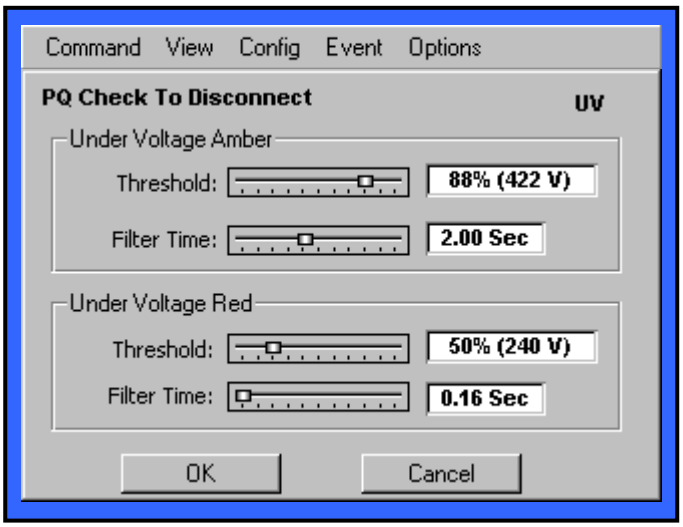

Figure 4.8-3: PQ Check to Disconnect – UV Window

4.8.4 PQ Check to Disconnect – OV Window

The "PQ Check to Disconnect – OV" window is shown below.
To open this window, select Config >> To Disconnect >> PQCheck OV on the menu bar.

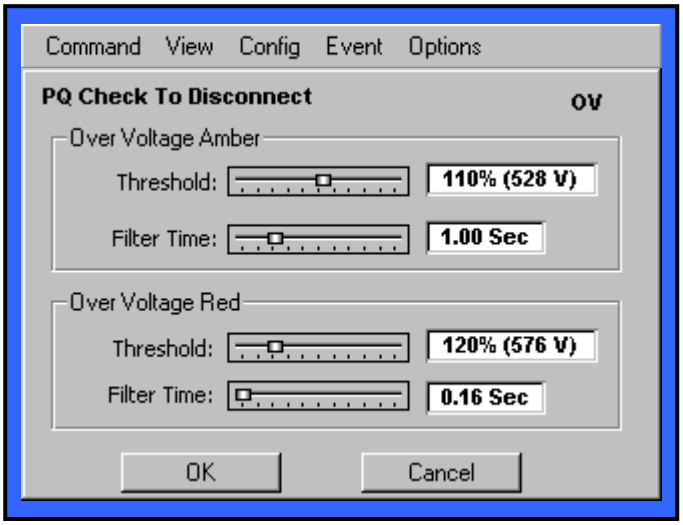

Figure 4.8-4: PQ Check to Disconnect – OV Window

4.8.5 PQ Check to Disconnect – Frequency Window

The "PQ Check to Disconnect – Frequency" window is shown below.
To open this window, select Config >> To Disconnect >> PQCheck Freq on the menu bar.

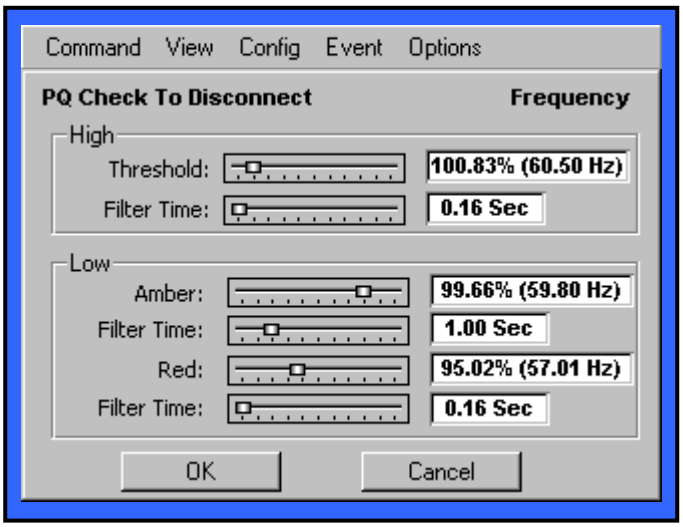

Figure 4.8-5: PQ Check to Disconnect – Frequency Window

4.8.6 Load Fault Window

The "Load Fault" window is shown below.
To open this window, select Config >> To Disconnect >> Load Fault on the menu bar.

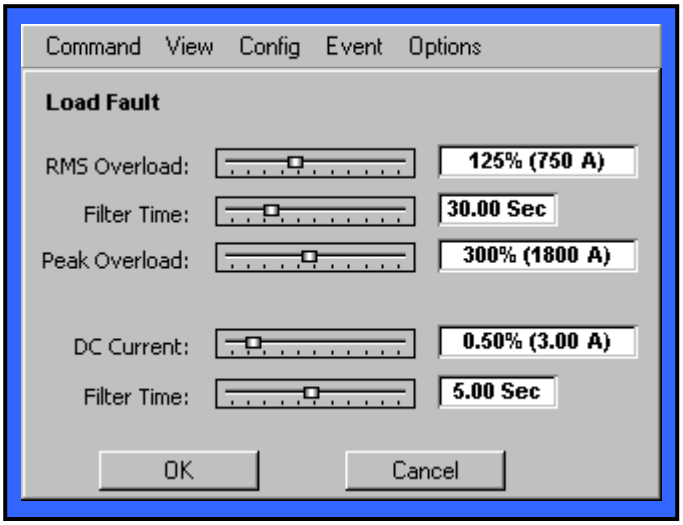

Figure 4.8-6: Load Fault Window

4.8.7 Power Flow Window

The "Power Flow" window is shown below.
To open this window, select Config >> To Disconnect >> Power Flow on the menu bar.

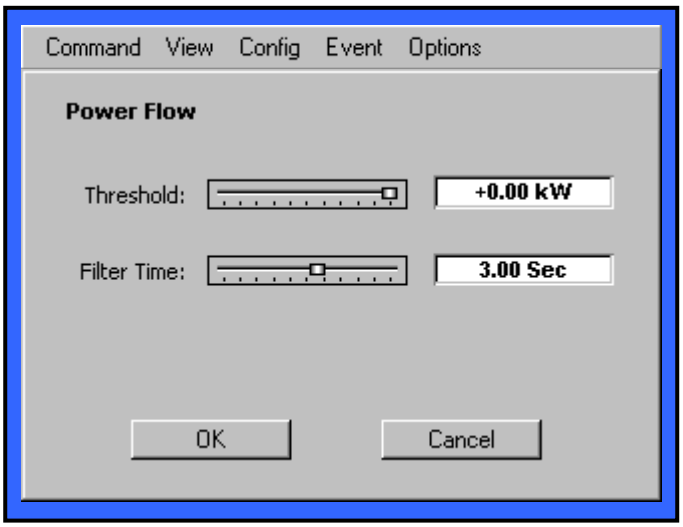

Figure 4.8-7: Power Flow Window

4.8.8 Switch Delays Window

The "Switch Delays" window is shown below.
To open this window, select Config >> To Disconnect >> Switch Delays on the menu bar.

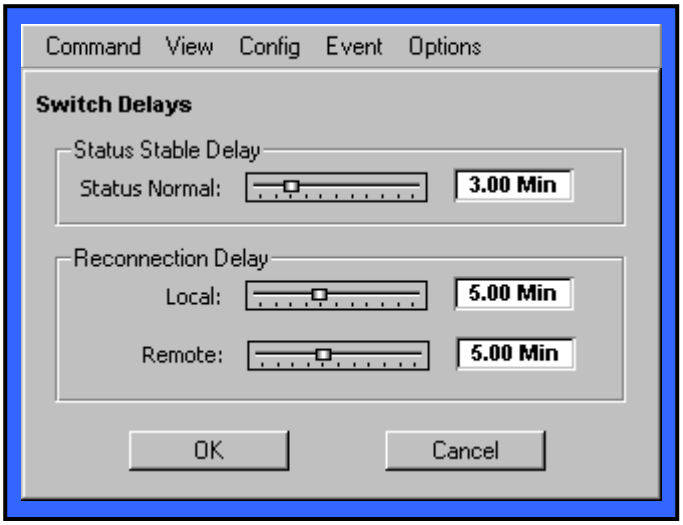

Figure 4.8-8: Switch Delays Window

4.9 Software Upgrades

The both Display Module (FX) software and the Main Logic Board (MLB) software can be upgraded using the procedures in this section. Upgrades can be performed using either the FTP or TFTP protocol. To access the windows and perform software upgrades as shown in this section, you must be logged in to Security Level 3 (service) or higher.

Note:

- FX upgrade files must have “romz” in the filename (case-sensitive).
- MLB upgrade files must have “dsp_ab” or “dsp_c” in the filename (case-sensitive).
- All upgrade filenames must end in “.bin”.

4.9.1 FTP Upgrades

To perform a software upgrade via FTP, enter the FTP Upgrade Mode by selecting Command >>Upgrade >> FTP on the menu bar. Once in FTP Upgrade Mode, execute an FTP (File Transfer Protocol) application from a remote host using the unit’s IP address. When prompted from the FTP application, enter the user name “admin” and then the “admin” password for the unit.

At the FTP prompt, enter “put xxx.bin”, where "xxx.bin" is the software upgrade filename. The file transfer should begin, and the status will be displayed in the Upgrade Progress popup window (shown below). The unit will automatically reboot after completion.

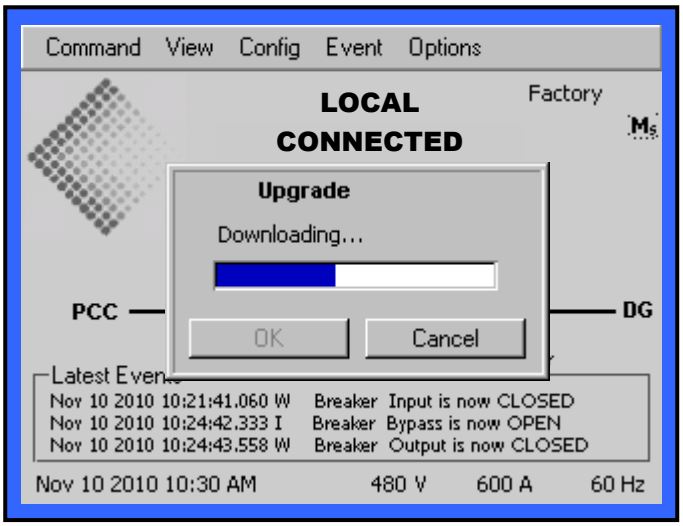

Figure 4.9-1: Upgrade in Process

4.9.2 TFTP Upgrades

To perform a software upgrade via TFTP, select Command >>Upgrade >> TFTP on the menu bar. A TFTP server must also be running on the host device. Enter the file name and the TFTP host address in the TFTP Configuration window (shown below). When the OK button is clicked, the file transfer will begin, and the status will be displayed in the Upgrade Progress popup window (shown above). The unit will automatically reboot after completion. .

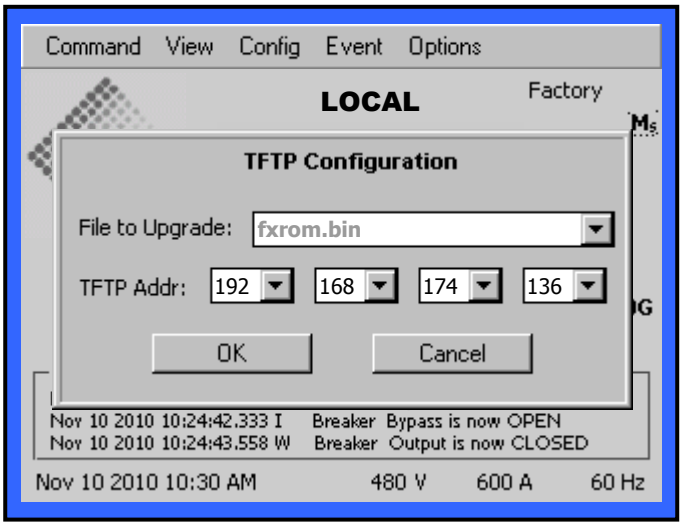

Figure 4.9-2: TFTP Configuration Window

5.0 Functional Description

5.1 Introduction

The essential function of the SMARTSWITCH is to separate critical load, which have connected DG, from the utility grid during system disturbances. The SMARTSWITCH will automatically reconnect the critical load and DG back to the utility grid when the utility system is within tolerance.

In order to carry out the protection functions, the SMARTSWITCH continuously monitors the quality of the utility grid and DG. The voltage, current and frequency on utility side of the switch are continuously monitored. The voltage and frequency on DG side of the switch are continuously monitored for synchronization check protection. The power flow at PCC is also continuously monitored for unintentional islanding protection.

The principal functionality of the SMARTSWITCH is divided among nine (9) printed circuit board assemblies:

- Central Power Supply
- FX Display Board
- Main Logic Board
- Gate Drive Board
- User-Interface Board
- Docking Board
- Voltage Daughter Board
- Fan Fail Board

5.2 Functional Description of the SMARTSWITCH Circuit Boards

5.2.1 Central Power Supply

The Power Supply Board is fed by three (3) individual transformers, which step the voltage down from source voltage to the necessary voltage to feed the power supply board rectifiers.

- Transformer 1 fed by the utility grid, Phase A to Phase B (T1 on D0049512-1-3)
- Transformer 2 fed by DG, Phase B to Phase C (T2 on D0049512-1-3)
- Transformer 3 fed by DG, Phase C to Phase A (T3 on D0049512-1-3)

The power supply delivers:

- Two (2) independent 28 VDC buses for the Gate Drive Board
- A separate 28 VDC bus for the FX Display Board
- A separate 28 VDC bus for the User-Interface Board and other options
- Two (2) redundant 28 VDC power supplies for the Main Logic Board
- Two (2) redundant 24 VDC power supplies for the Docking and User-Interface Boards
- A 28 VDC bus (powered by utility through T1 and DG through T3) for the backup protection relay
- Output DC buses will be 28 VDC, unregulated +15%/-30%
- Power for a minimum of 100 milliseconds after all sources have failed (assumes that at least one [1] source was at nominal voltage immediately prior to the loss of all AC input voltage)

Power Supply Board features:

- Monitoring differentiates and identifies individual bus and input failures
- A coded, three (3) bit word will convey fault information to the Main Logic Board. (The Main Logic Board will evaluate input failure with source availability to determine the nature of the failure.)
- Indicating LEDs aid in identification of faults.
- Each output is fused.
- Each output is supported by sufficient capacitance to blow the output fuse when a short circuit occurs on an individual bus

5.2.2 FX Board and Display Assembly

The FX is the display portion of the SMARTSWITCH. It provides the Graphical User-Interface (GUI) and communicates with the Main Logic and User-Interface Boards.

The FX presents information to the user via an LCD display. Buttons on the front display panel are used to navigate menus that allow the user to access various control and metering functions.

LEDs resident on the board give indication of critical component failures, such as memory. The serial port and event log give indication of non-critical component failures, such as the LCD display.

- LCD backlighting circuits
- Contains a real-time clock to provide time stamps for all events
- Ambient temperature circuit

Two key switches are provided on the front display panel to select the following control functions.

- SW1 – Disconnect or Connect
  Turn off SCR's to disconnect DG from utility or Enable SCR control by the SMARTSWITCH to connect DG to utility only when conditions are meet

- SW2 – Local or Remote
  In local mode, the SMARTSWITCH is controlled by internal logic.
  In remote mode, the SMARTSWITCH can accept open and close commands from SCADA system. However, when closing back to the utility, the SMARTSWITCH shall validate sync check function before initiate the close command.

The position of the key switches is directly monitored by the Main Logic Board.

A local EPO button is also provided on the front display panel. Pressing the EPO button will shunt trip the input, bypass and load circuit breakers through the Docking Board. The SCR's will also be turned off upon receiving the EPO command. The SMARTSWITCH will be out of service.

5.2.3 Main Logic Board

The Main Logic Board contains three (3) separate sections: Utility grid and PCC monitoring, DG monitoring, and Main Control Logic. Each has a dedicated section to sense, analyze, and respond to conditions pertinent to controlling the SMARTSWITCH. The key component to this function is a DSP, which monitors the quality of each source (utility grid or DG).

Partitioning the Main Logic Board into three (3) sections provides separate "fault-containment" regions. Each section receives its own 28 Volt control power source from the Main Power Supply via the Docking Board. All regulated digital and analog sources required for each section are derived from its own 28 Volt supply. Each section's 28 Volt supply is diode-isolated and fused separately from the others.

The microprocessor in the Main Control Logic Section serves as a flight recorder and communicator of all SMARTSWITCH functions.

The Main Logic Board detects and responds to the following system fault conditions:

- IEEE 1547 protection type of faults (under/over voltage, under/over frequency and unintentional islanding)
- Power quality faults (adjustable over and under RMS voltage level with adjustable response time delay)
- Fault level over-currents
- Open SCR
- Shorted SCR
- Gate Drive power supply failure
- Communication failures
- Main Logic Board power supply failures
- Fan failures
- Cabinet over-temperature
- Tripped circuit breakers

The Main Logic Board accepts open command without delay from the backup protection relay through form C relay output contacts.

5.2.4 Gate Drive Module

The Gate Drive Board conveys information to the Main Logic Board regarding the status of input power source and output bus. Based on commands from the Main Logic Board, the Gate Drive controls the SCRs that determine if the DG shall be connected to the utility grid. The Gate Drive Board communicates with the Main Logic Board via fiber optic cables to provide a fast, noise-immune communication link. See section 9.0, Drawings.

The Gate Drive Board produces independent, isolated voltages for the monitoring and firing of the SCRs for each of the three (3) phases of its source. These independent, isolated voltages are ±15 Volts for the analog monitoring circuits and +15VDC (actual voltage is less than 15 volts) for each phase.

CAUTION!

HIGH VOLTAGES (EQUAL TO SYSTEM SOURCE VOLTAGE) ARE PRESENT ON THIS BOARD AT CONNECTORS J5, J6, J7, J8, J9, J10, and J11. **OBSERVE PROPER SAFETY MEASURES**. Many sections of this board are electrically isolated and require great care in the use of monitoring instruments. Test points for referencing the instruments are identified in the test point table. With some equipment it will be necessary to "float" (isolate from electrical ground) the equipment at the voltage of the circuit in which the measurement is to be taken. **For other measurements, it may be necessary to use high voltage differential probes.**

5.2.5 User-Interface Board

The User-Interface Board (UIB) provides interface for connecting the SMARTSWITCH to external monitoring and control equipment. The main features of this board include:

1) Relay contacts indicating status of the SMARTSWITCH:

Reference drawing C65205-2.

Designation	Contacts	Alarm Function
Alarm_1	J18:1-3	SCR's open and close status
Alarm_2	J18:4-6	SCR's "ready to close" signal
Alarm_3	---	Not Used
Alarm_4	J18:10-12	Input circuit breaker status
Alarm_5	J18:13-15	Output circuit breaker status
Alarm_6	J18:16-18	Bypass circuit breaker status
Alarm_7	J16:1-3	Summary Unacked
Sum_Alarm	J16:4-5	Summary Alarm

2) Alarm contacts:
   - Summary alarm or loss of UIB communications (J16-4, J16-5, and J16-6)
   - Unacknowledged events (J16-1, J16-2 and J16-3)

3) Isolated inputs (dry contacts) for user remote control commands for the SMARTSWITCH:
   - Remote EPO (Emergency Power Off) input directly to Docking Board to force a shunt-trip on input, bypass and load breakers. (J17-15 and J17-16)
   - External open command without delay from SCADA system (J17-6)
   - External open command with adjustable delay originated from an external transfer trip signal (J17-9)

4) RJ-45 plug for user Ethernet connection and connection to display (J4)

5) RS485, five (5) pin Phoenix for Modbus user connection and also Modbus connection to slave units.

6) Service gateway serial port ten (10) pin Phoenix.

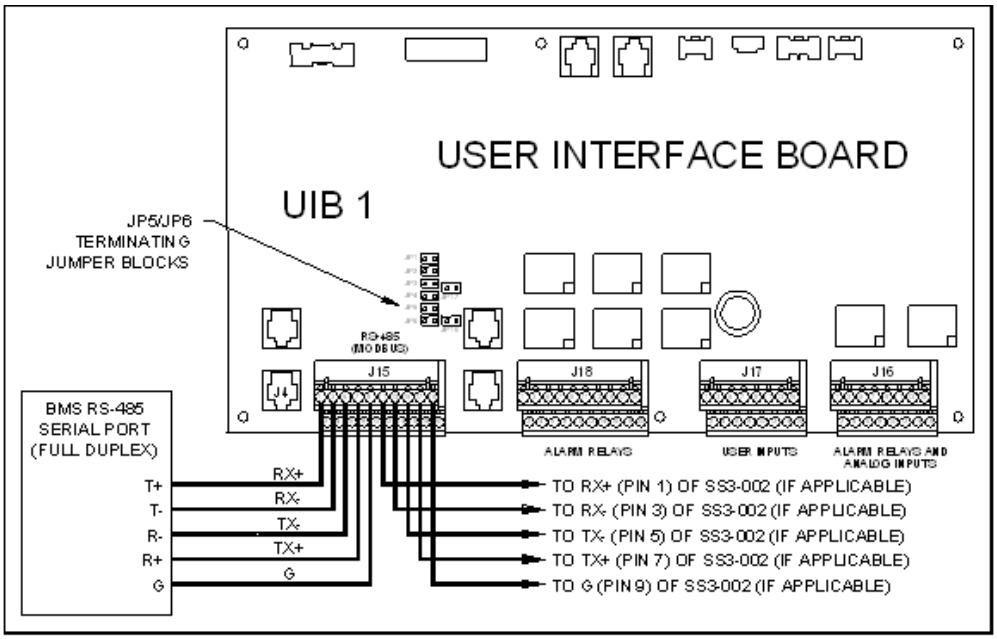

5.2.6 Docking Board

The Docking Board provides a "patch panel tie point" for various signals that interface between the system control elements (mainly the Main Logic Board) and other devices in the cabinet, such as voltage and current monitoring transducer elements.

The basic function of the Docking Board is to provide a mechanically convenient (for manufacturability, testability, and field serviceability) interconnect means to aggregate signals and cables from a variety of locations to the Main Logic Board. Signal processing circuits are also present on this board, which provide a buffer between MLB logic (or low-level signal levels) and the high-level inputs to or outputs from the MLB to other devices in the system. The principal functions of the Docking Board include:

1) Utility input sensing (utility side of the SMARTSWITCH):
   - Each phase voltage (3) sensed line-line
   - Each phase current (3)

2) DG sensing (load side of the SMARTSWITCH):
   - Each phase voltage (3) sensed line-line

3) PCC sensing (point of common coupling):
   - Each phase current (3)

The Docking Board also shunt trips the input, bypass or load circuit breakers following the local or remote EPO command or shunt trip command from the Main Logic Board.

5.2.7 Voltage Daughter Board

The Voltage Daughter Board steps down the sensing voltages from the utility grid and DG. The stepped down sensing voltages are fed to the Docking Board.

5.3 Status and Fault LEDs

5.3.1 PS1 LED Indicators

For a listing of LED indicators, see table in Appendix A-6. Refer to illustration in Appendix B-1.

5.3.2 FX Logic Board

In normal operation, the green LED is ON and the red LED is OFF. In failure mode, the red LED is blinking and the green LED is OFF. During boot-up, both LEDs flicker at various rates and times for approximately ten (10) seconds.

See Appendix A-7 for a list of LED indicators. Refer to illustration in Appendix B-2.

5.3.3 Main Logic Board

The Main Logic Board LEDs indicate main logic and gate drive status. For a list of LED indicators, see Appendix A-8. Refer to illustration in Appendix B-3.

5.3.4 Gate Drive Board

The Gate Drive Board LEDs indicate the power stage status. For a list of LED indicators, see Appendix Table A-9. Refer to illustration in Appendix B-4.

5.3.5 User-Interface Board

The User-Interface Board LEDs indicate the system status. For a list of LED indicators, see Appendix Table A-10 and refer to illustration in Appendix B-5.

5.3.6 Docking Board

The Docking Board contains one LED that when on indicates the EPO circuit has been enabled. Refer illustration in Appendix B-6.

5.4 Internal Circuit Breakers

SMARTSWITCH is equipped with three breakers (S1 Input, S1 Bypass, and Load A). Molded Case is used for the 1200A SMARTSWITCH. All breakers are equipped with shunt trip coils. These are controlled by the logic to ensure proper and safe operation.

S1 Bypass breaker is controlled by "Kirk-Keys". The operator shall verify both DG and utility are within normal range, provided the voltage and phase difference of the DG and utility is near zero before closing the bypass breaker.

Note: All internal breakers are 100% rated. The SMARTSWITCH is equipped with non-automatic circuit breakers unless otherwise specified. As such, they provide no long-term over-current protection. Overload and fault protection must be user supplied in the form of upstream breakers or fused disconnect switches.

Note: Unless otherwise noted on the unit's nameplate, breakers are rated for fault-withstand current of 100 kA.

5.5 Other Assemblies

5.5.1 Power Stage

The Power Stage is comprised of the following elements:

- Heatsink assemblies
- Cooling Fans
- Snubber Boards

There are three (3) heatsink assemblies, one (1) for each of the three (3) phases of the power sources. Each heatsink assembly contains one (1) pairs of anti-parallel connected SCRs, connected between the input and output buses of each phase. Each heatsink assembly can be removed separately for servicing.

Cooling fans are required to maintain safe operating temperatures. The cabinet fans (3) are located in the top portions of the SMARTSWITCH cabinet. From this position, the fans create a low velocity of inlet air at the bottom of the cabinet, negating the need for inlet air filters. The heatsink fans (3) are located in the front of the heatsink assemblies. If any one (1) of the cabinet fans or heatsink fans fails, its failure is sensed and reported. The remaining fans are fully rated for all SMARTSWITCH operating conditions.

Fault messages are issued to alert the user when service is needed.

Three (3) Snubber Boards (one [1] for each SCR switch pair) are provided to protect the SMARTSWITCH from externally generated transient voltages and to limit the dv/dt seen by the SCRs during a transfer.

5.5.2 TVSS Modules

The SMARTSWITCH is equipped with Transient Voltage Surge Suppression (TVSS) protection modules for its input power source (utility grid). These modules provide protection from externally generated voltage transients. The standard protection level provided is up to a 20,000-volt spike, per IEEE C62.41 Category C3 Standards.

6.0 External Protection

All branch circuits and loads connected to the output bus of the SMARTSWITCH should be protected and isolated by protective devices supplied by the user in accordance with local codes and ordinances.

Properly selected upstream protection for both sources connected to the SMARTSWITCH is required in order to ensure safe operation of the system. The user's upstream protection must supply continuous over-current protection, i.e. a SMARTSWITCH rated for 1200 amps must have long-term protection sized for 1200 amps.

Note: Although Molded Case (up to 1200amps switches supplied internal to the SMARTSWITCH have trip functions, their operation is not certified by Underwriters Laboratories (UL) and cannot be part of the UL Listed system protection scheme. The user should be aware that these devices will open under fault currents of eight to ten times the rated current of the SMARTSWITCH. 100% rated external breaker or fused disconnect switch shall be provided for upstream or downstream protection (for both utility and DG side of the switch)

Table 6.1
SMARTSWITCH External Protection Breakers
Current Rating: 1200 Amp

MODEL	RECOMMENDED UPSTREAM PROTECTION BREAKER MFR	MFR PART NO.	IPEAK LET-THROUGH (AMPS)	I^2T LET-THROUGH X 1,000,000	TOTAL CLEARING Time (Msec.)	AVAILABLE SOURCE FAULT CURRENT
GTX-12002-316-480-3N100	Square D	PLL34120CU31A	115,000	38	16-32	100kA

7.0 Specifications

7.1 Standards

The SMARTSWITCH is in compliance with the applicable requirements of:

- Institute of Electrical and Electronics Engineers (IEEE)
  - 1547-2003 Standard for Interconnection Distributed Resource with Electric Power Systems
  - C62.41.2-2002 IEEE Recommended Practice on Characterization of Surges in Low-Voltage (1000V and Less) AC Power Circuits.

- ANSI/NFPA 70 (2002)
- National Electrical Code, 2002

7.2 SMARTSWITCH Electrical Characteristics

- Nominal Source Voltages:
  480 VAC, 3 phase, 4 wire, grounded system
- Source Frequencies: 60Hz
- Current Rating: 1200A continuous.
- Load Power Factor: Unity to 0.50 lagging or leading
- Overload Rating:
  125% for five (5) minutes
  150% for one (1) minute
  200% for ten (10) seconds
  1000% for three (3) cycles
  1500% for one (1) cycle
- Harmonic Current Feedback from the load: Unlimited
- Source Harmonic Voltage Content in the line feeding the load:
  Maximum 5% total harmonics or as acceptable to the load
  Maximum 3% single harmonics or as acceptable to the load
- Voltage Transient Withstand without failure or malfunction, present on the line: Up to 20,000-volt spike, per IEEE C62.41 Category C3 Standards.
- Over-current Protection: The internal Molded Case switches are rated for the nameplate current rating. These Type II SMARTSWITCH devices are non-automatic rated at 100kAIC.

7.3 Environmental Characteristics

The SMARTSWITCH is capable of withstanding any combinations of environmental conditions listed below without mechanical or electrical damage or degradation of operation.

- Operating ambient temperature: 0 to 40° C
- Non-operating and storage ambient temperature: 0 to 70° C
- Relative humidity: 0 to 95% non-condensing
- Noise Level: <70dba at six feet from the unit
- Barometric Pressure: At elevations up to 6000 feet above sea level
- Equipment is designated for indoor use in a clean (dust free), temperature and humidity-controlled environment.
- AC to AC efficiency (defined as AC output kW divided by AC input kW at full nominal rating of 0.8 power factor load) is not less than 99%

7.4 Physical and Thermal Properties

Table 7.4 below details the physical and thermal properties of selected SMARTSWITCH models.

Table 7.4
Physical & Thermal Properties

MODEL NO.	CONTINUOUS CURRENT	VOLTS	HZ	WIDTH (IN.)	DEPTH (IN.)	HEIGHT (IN.)	WEIGHT (LB.)	BTU/HR.
GTX-12002-316-480	1200	480	60	64	42	77.25	?	10000

8.0 System Maintenance

WARNING

WARNING -- ONLY QUALIFIED SERVICE PERSONNEL SHOULD PERFORM MAINTENANCE ON THE SMARTSWITCH.

EXERCISE EXTREME CARE TO AVOID EQUIPMENT DAMAGE OR INJURY TO PERSONNEL.

LETHAL VOLTAGES EXIST INSIDE THE UNIT DURING NORMAL OPERATION.

THE UNIT IS SUPPLIED BY MULTIPLE SOURCES OF AC POWER. DISCONNECT AND LOCK OUT ALL SOURCES OF POWER BEFORE WORKING INSIDE THE UNIT.

Minimal periodic maintenance of the unit is required. As with all electrical distribution components, this system should be regularly inspected for electrical connection integrity, signs of excessive temperature, accumulation of dirt, and proper system operation.

8.1 Tightening Torques

Recommended tightening torque for all nuts and bolts is listed in the table below. As applicable, torque seal has been utilized to indicate bolt torquing.

Table 8.1
Recommended Tightening Torque

THREAD SIZE	SAE GRADE 0-1-2 74,000 psi Low Carbon Steel		SAE GRADE 3 100,000 psi Med. Carbon Steel		SAE GRADE 5 120,000 psi Med. Carbon Heat T.	
Inch	Lb-In.	N-M	Lb-In.	N-M	Lb-In.	N-M
#6	8.7	1.0				
#8	17.8	2.0				
#10	29.7	3.4				
1/4	53.1	6	79.7	9	88.5	10
5/16	106.2	12	150.5	17	168.2	19
3/8	177.0	20	265.5	30	292.1	33
1/2	416.0	47	610.7	69	690.4	78

ALL INTERNAL BOLTS ARE SAE GRADE 5.
NOTE BOLT HEAD MARKINGS ABOVE TO DISTINGUISH BETWEEN GRADES.
ALL INTERNAL MACHINE SCREWS ARE GRADE 2.

8.2 Testing the Unit

This unit includes comprehensive alarms and fault detection for identification of operational problems. Periodic transfer tests should be performed, including changing the preferred source and switching sources.

See Sections 3.0, 4.0, and 5.0 for specific instructions on source switching, transfers, and preferred source selection.

Installation, Operation & Service Manual

APPENDIX

Appendix A-1: Menu Structure Table
(Ref. Section 4.2.2)

Top Level Menu	Menu Item	Sub Menu	Function	Security					
				0	1	2	3	4	5
Command				X	X	X	X	X	X
	Login…		Opens the 'Login' window. (Section 4.4.2).	X	X	X	X	X	X
	Logout		Logout from current security level. (Section 4.4.3).	–	①	①	①	①	①
	Set PassWord…		Opens the 'Set PassWord' window. (Section 4.4.4).	–	①	①	①	①	①
	Upgrade			–	–	–	X	X	X
		TFTP	Opens the 'TFTP Configuration' window. (Section 4.9.2)	–	–	–	X	X	X
		FTP	Places unit in FTP Upgrade Mode. (Section 4.9.1)	–	–	–	X	X	X
	--------			–	–	–	–	–	–
	Reset			–	–	X	X	X	X
		Peak Current…	Resets Peak Current.	–	–	X	X	X	X
		Min/Max…	Resets Min/Max data	–	–	X	X	X	X
	Manual Disconnect		Manually opens the static switch.	–	–	④	④	④	④
View				X	X	X	X	X	X
	System…		Opens the 'System Information' window. (Section 4.3.1)	X	X	X	X	X	X
	Config…		Opens the 'Option Information' window. (Section 4.3.2)	X	X	X	X	X	X
	--------			–	–	–	–	–	–
	Metering…		Opens the 'Metering' window. (Section 4.7.1)	X	X	X	X	X	X
	Load_Metering…		Opens the 'Load_Metering' window. (Section 4.7.2)	X	X	X	X	X	X
	Harmonics			X	X	X	X	X	X
		PCC	Opens PCC 'Harmonic Analyzer' window. (Section 4.7.3)	X	X	X	X	X	X
		DG	Opens DG 'Harmonic Analyzer' window. (Section 4.7.3)	X	X	X	X	X	X
	Thermal…		Opens the 'Thermal' window. (Section 4.7.4)	X	X	X	X	X	X
Config				X	X	X	X	X	X
	To Connect			X	X	X	X	X	X
		Sync Check	Opens the 'Sync Check to Connect' window. (Section 4.8.1)	X	X	X	X	X	X
		PQ Check	Opens the 'PQ Check to Connect' window. (Section 4.8.2)	X	X	X	X	X	X
	To Disconnect			X	X	X	X	X	X
		PQ Check UV	Opens 'PQ Check to Disconnect' - UV window. (Section 4.8.3)	X	X	X	X	X	X
		PQ Check OV	Opens 'PQ Check to Disconnect' - OV window. (Section 4.8.4)	X	X	X	X	X	X
		PQ Check Freq	Opens 'PQ Check to Disconnect' - Frequency window. (Sect. 4.8.4)	X	X	X	X	X	X
		Load Fault	Opens the 'Load Fault' window. (Section 4.8.6)	X	X	X	X	X	X
		Power Flow	Opens the 'Power Flow' window. (Section 4.8.7)	X	X	X	X	X	X
		Harmonics…		–	–	–	–	–	–
	Switch Delays		Opens the 'Switch Delays' window. (Section 4.8.8)	X	X	X	X	X	X
Event				X	X	X	X	X	X
	View…		Opens the 'Event Log' window. (Section 4.6.2)	X	X	X	X	X	X
	Ack Selected		Acknowledge selected events.	–	–	③	③	③	③
	Delete Selected		Delete selected events.	–	–	③	③	③	③
	Select All		Select all events in the log.	②	②	②	②	②	②
	--------			–	–	–	–	–	–
	Email		Function not currently available.	X	X	X	X	X	X
		Last 100…	Function not currently available.	–	–	–	–	–	–
		Filtered…	Function not currently available.	②	②	②	②	②	②
		All…	Function not currently available.	–	–	–	–	–	–
	Filter…		Opens the 'Event Filtering window. (Section 4.6.6)	②	②	②	②	②	②
	Extra Info…		Display additional event information. (Section 4.6.5)	②	②	②	②	②	②
Options				X	X	X	X	X	X
	System…		Opens the 'System Configuration' window. (Section 4.5.1)	–	–	X	X	X	X
	Time…		Opens the 'Time & Date Configuration' window. (Section 4.5.2)	–	–	X	X	X	X
	Communication…		Opens the 'Access Configuration' window. (Section 4.5.3)	X	X	X	X	X	X
	Email…		Function not currently available.	–	–	–	–	–	–
	Display…		Opens the 'LCD Contrast' window. (Section 4.5.4)	–	–	X	X	X	X
	--------			–	–	–	–	–	–
	Help		Opens the 'System Help' window (for service phone numbers).	X	X	X	X	X	X

– Menu item is disabled.
X Menu item is enabled.
① Menu item is enabled only while logged in.
② Menu item is enabled only while the event log screen is showing.
③ Menu item is enabled only while events are selected on the event log screen.
④ Menu item is enabled only while Static Switch is closed.

Appendix A-2: System Events Table
(Ref. Section 4.6)

Event Text	Sev	Req Ack	Active	Arguments Saved with Event	Description	Corrective Action
* Display software VA1.A2 *	I			Major Version, Minor Version	The display software has begun its initialization of the system. The version number of the software is stated.	The message is informational.
A1 Form C failure	W	x		Input, Output, Bypass, SCR On/Off switch, Remote/Local switch, External Trip	The unit has encountered a failure in reading the state of a breaker/switch.	Contact TNB representative for immediate replacement.
A1 over temperature	W	x	x	Cabinet, Heatsink #1, Heatsink #2	A portion of the unit is over the preset temperature required for normal operation. The unit may still operate normally.	Contact TNB representative immediately.
A1 returned to normal temperature	I			Cabinet, Heatsink #1, Heatsink #2	A portion of the unit has returned to a normal operating temperature.	The message is informational.
A1 Power Quality is Bad (Red)	W		x	PCC, DG	Bad power quality was detected.	The message is informational.
A1 Power Quality is Poor (Yellow)	W		x	PCC, DG	Poor power quality was detected.	The message is informational.
Breaker A1 is now closed	W			Input, Output	The Input or Output breaker has been closed on the unit.	The message is informational.
Breaker A1 is now closed	W		x	Bypass	The Bypass breaker has been closed on the unit.	The message is informational.
Breaker A1 is now open	A	x	x	Input, Output	The Input or Output breaker has been opened on the unit.	The message is informational.
Breaker A1 is now open	I			Bypass	The Bypass breaker has been opened on the unit.	The message is informational.
Breaker A1 Shunt Tripped	A	x		Input, Output, Bypass	The unit intentionally shunt tripped a breaker.	The message is informational.
Cannot read non-volatile parameters, using defaults	A	x			The display software is unable to load user set points and system configuration information. Default values have been used. This system's Ethernet will not work correctly.	Contact TNB representative for immediate replacement.
Cannot read valid display temperature	W	x			The display is unable to utilize the onboard temperature sensor. The product may still function normally without sensing temperature.	Contact TNB representative for replacement.
Can not sense state on breaker A1	A	x		Breaker name ① (See note at end.)	The unit attempted to check the state of a breaker (open or closed) but the indication was conflicting.	Contact TNB representative immediately.
Can not trip breaker A1	A	x		Breaker name ① (See note at end.)	The unit attempted to shunt trip and breaker but failed to see an indication that the breaker was tripped.	Contact TNB representative immediately.
Display battery is dead, logs will be lost	A	x			The battery that powers the event log is dead. Event logs have been lost.	Contact TNB representative for replacement.
Display battery is low, replace soon	W				The battery that powers the event log needs replacement.	Contact TNB representative for replacement.
Display initialization complete	I				The display software of the given revision has booted normally.	The message always occurs at power-up or reset.
Display restarted due to internal reset	W				The display was booted due to a previous internal system reset.	The message is informational.
Display restarted due to power up	W				The display was booted due to a previous loss of power.	The message is informational.
Display restarted due to watchdog reset	W				The display was booted due to an internal reset.	The message is informational.
Door is now CLOSED	I				The door is now closed.	The message is informational.
Door is now OPEN	W		x		The door is now open.	The message is informational.
Downgraded software	I				The user downgraded the display software.	The message is informational.
EPO (Emer Power Off) has been defeated	W	x			The EPO or Emergency Power Off feature has been defeated by the user.	The message is informational and is intended to provide traceability.
EPO (Emer Power Off) has been enabled	I				The EPO or Emergency Power Off feature has been enabled by the user.	The message is informational and is intended to provide traceability.
Event info memory is available	I				The amount of free memory used for event log arguments has dropped to recommended levels.	The message is informational.

Event Text	Sev	Req Ack	Active	Arguments Saved with Event	Description	Corrective Action
Event info memory is full	A	x	x		The display memory used to store arguments for events is full. Events will still be stored, but arguments will be indicated with a “(lost)” in place of the argument field.	Delete unnecessary events and more memory will become available.
Event info memory is low	W		x		The display memory used to store arguments for events is low. Events will still be stored with arguments until memory is completed exhausted.	Delete unnecessary events and more memory will become available.
Event log corrupt, log restarted	W				During the boot up procedure the event log data was found to be corrupt and unusable. The log was erased and restarted.	The message is informational.
Event log restarted	W				The display could not find a previously stored event log on power up. If a previous event log was available, it was lost.	Check for battery warnings in the event log. The battery may need to be replaced. Contact TNB representative for replacement.
Event memory is available	I				The amount of free memory used for events has dropped to recommended levels.	The message is informational.
Event memory is full	A	x	x		The display memory used to store events is full. Events will still be stored, but earlier events will be lost.	Delete unnecessary events to prevent loss of earlier events.
Event memory is low	W		x		The display memory used to store events is low. Events will still be stored, but earlier events may be lost when memory fills.	Delete unnecessary events to prevent loss of earlier events.
Event wave capture memory is available	I				The amount of free memory used for event log waveform capture has dropped to recommended levels.	The message is informational.
Event wave capture memory is full	A	x	x		The display memory used to store waveform captures for events is full. Events will still be stored, but waveform captures will be indicated with a “(lost)” in place of the argument field.	Delete unnecessary events with waveform captures attached to them and more memory will become available.
Event wave capture memory is low	W		x		The display memory used to store waveform captures for events is low. Events will still be stored normally until memory is completed exhausted.	Delete unnecessary events with waveform captures attached to them and more memory will become available.
Failed to find contact buttons & LEDs	A				The display is unable to utilize the mimic, buttons, & knob. The product may still function normally without those inputs. Use other connectivity means to verify.	Contact TNB representative for immediate replacement.
Failed to start general bus driver	A	x			The driver for the external components has failed to begin at boot time. The transfer logic will still function normally, but other functionality such as User-Interface or Thermal Scan may fail.	Internal Error. Contact TNB.
Failed to start main logic driver	A	x			The driver for the main logic component has failed to begin at boot time. Logic may be working with default set points, or may not be working at all.	Internal Error. Contact TNB immediately.
Fan #A1 has been restored	I			1, 2, 3	The fan has begun operating normally.	The message is informational.
Fan #A1 has failed	W	x	x	1, 2, 3	There is an indication that a fan has stopped flowing air.	Check for obstruction or contact TNB representative.
Faults Clear req from GUI	I				A fault-clear request was made from the GUI.	The message is informational.
Gate drive bit failure	A	x	x		A gate drive bit failure was detected.	Contact DPS representative immediately. This may be the result of hardware failure.
Gate drive bit restored	I				The gate drive bit failure condition has cleared.	The message is informational.

Event Text	Sev	Req Ack	Active	Arguments Saved with Event	Description	Corrective Action
High retries to A1 board	W			Board name	The number of failures for packets from the display to another board is above the recommended level. The unit operates normally because packets are sent again.	Contact TNB representative. This may be the result of hardware failure or cabling.
Illegal access to Modbus TCP from IP address A1	W			IP address attempting request	An attempt was made to utilize Modbus TCP via Ethernet functionality from an IP address that does not have access rights.	Check the IP address in the event. If deemed "'safe," add the IP address to the "Modbus Configuration" window.
Item, A1 (A2), is above high limit (A3)	A	x	x	ID, Value, Limit	The data item has reached a value that is above the preset high limit of the unit.	Depending on the item, this may be an indication of a power quality problem. Contact TNB representative.
Item, A1 (A2), is above high yellow limit (A3)	W		x	ID, Value, Limit	The data item has reached a value that is above the preset yellow high limit of the unit.	Depending on the item, this may be an indication of a power quality problem. Contact TNB representative.
Item, A1 (A2), is below low limit (A3)	A	x	x	ID, Value, Limit	The data item has reached a value that is below the preset low limit of the unit.	Depending on the item, this may be an indication of a power quality problem. Contact TNB representative.
Item, A1 (A2), is below low yellow limit (A3)	W		x	ID, Value, Limit	The data item has reached a value that is below the preset yellow low limit of the unit. The index may be used to indicate the source.	Depending on the item, this may be an indication of a power quality problem. Contact TNB representative.
Item, A1 (A2), is normal	I			Value, Limit	The data item has returned to a value that is within the limits of the unit.	The message is informational.
Item, A1 A2 (A3), is above high limit (A4)	A	x	x	ID, Index, Value, Limit	The data item has reached a value that is above the preset high limit of the unit. The index may be used to indicate the source.	Depending on the item, this may be an indication of a power quality problem. Contact TNB representative.
Item, A1 A2 (A3), is above high yellow limit (A4)	W		x	ID, Index, Value, Limit	The data item has reached a value that is above the preset yellow high limit of the unit. The index may be used to indicate the source.	Depending on the item, this may be an indication of a power quality problem. Contact TNB representative.
Item, A1 A2 (A3), is below low limit (A4)	A	x	x	ID, Index, Value, Limit	The data item has reached a value that is below the preset low limit of the unit. The index may be used to indicate the source.	Depending on the item, this may be an indication of a power quality problem. Contact TNB representative.
Item, A1 A2 (A3), is below low yellow limit (A4)	W		x	ID, Index, Value, Limit	The data item has reached a value that is above the preset high limit of the unit. The index may be used to indicate the source.	Depending on the item, this may be an indication of a power quality problem. Contact TNB representative.
Item, A1 A2 (A3), is normal	I			Value, Limit, Index	The data item has returned to a value that is within the limits of the unit. The index may be used to indicate the source.	The message is informational.
LCD display not functioning	A	x			The display is unable to utilize the LCD screen. The unit may still function normally without the LCD screen and be accessible via Ethernet.	Contact TNB representative for immediate replacement.
Logic VA1.A2 initialization failed	A	x		Major version, Minor version	The logic has failed to initialize.	Contact TNB representative immediately.
Logic VA1.A2 initialized successfully	I			Major version, Minor version	The logic has initialized successfully.	The message is informational.
Lost communication to A1 board	A	x	x	Name of board	The display lost communication with a desired component. Some operational features maybe lost depending on the purpose of the component.	Contact TNB representative immediately. This may be the result of hardware failure or cabling.
Modbus driver failed to start	A	x			The driver for the Modbus component has failed to begin at boot time. Display and transfer logic will be working properly, but Modbus RS-485 & TCP have failed.	Internal Error. Contact TNB.
Modbus TCP internal error A1	A	x		Error number	The Modbus TCP driver encountered and error transmitting a TCP/IP packet.	Contact TNB representative.
Open SCR on Phase A1	A	x	x	A, B, C	The unit sensed an Open SCR.	Contact TNB representative immediately.
Open State Over Current on Phase A1, A2	A	x		A, B, C / Current Reading	Open-state over-current was detected.	The message is informational.

Event Text	Sev	Req Ack	Active	Arguments Saved with Event	Description	Corrective Action
Output is available	I				A previously unavailable output is now available.	The message is informational.
Over DC current on Phase A1, A2	A	x		A, B, C / current reading	DC over-current was detected.	The message is informational.
Over Negative sequence components	A	x	x		Over negative sequence components were detected.	The message is informational.
Over Zero sequence components	A	x	x		Over zero sequence components were detected.	The message is informational.
Packet to A1 failed after max retries	A	x		Name of board, Header	A packet sent by the display never reached its destination. A requested feature may not proceed properly, but normal operation may continue.	Contact TNB representative. This may be the result of hardware failure or cabling.
Peak Overload on Phase A1, A2	A	x	x	A, B, C / Current Reading	A peak current overload was detected.	The message is informational.
Phase Rotation A1	A			Normal, Reversed	Phase Rotation is either Normal or Reversed.	The message is informational.
Power flow fault	A	x			Power flow fault was detected.	The message is informational.
Power supply A1 normal	I			24V, DC, AC	The power supply is now functioning normally.	The message is informational.
Power supply A1 failure	W	x	x	24V, DC, AC	24V = Failure of the 24 VDC supply. DC = One of the output fuses of the PS1 has failed. AC = One of the control panel switches is open, or loss of control power source, or one of the input fuses of the PS1 has failed.	If all control panel switches are closed and both sources are available to the static switch, then contact a TNB service representative immediately.
Remote commanded to Close	I				Remote commanded to close.	The message is informational.
Remote commanded to Open	I				Remote commanded to open.	The message is informational.
Remote Mode disabled	W				Remote Mode was disabled.	The message is informational.
Remote Mode enabled	I				Remote Mode was enabled.	The message is informational.
Restarted clock	W				The clock on the display has been restarted.	The message is informational, but may be in conjunction with a clock failure. It may occur normally with a battery change.
RMS Overload on Phase A1, A2	W	x	x	A, B, C / Current Reading	An RMS current overload was detected.	The message is informational.
Shorted SCR on Phase A1	A	x	x	A, B, C	The unit sensed a Shorted SCR.	Contact TNB representative immediately.
Sources in sync	I				The sources are in sync.	The message is informational.
Sources out of sync	W				The sources are out of sync.	The message is informational.
Snubber Fault	A	x	x		The snubber board has encountered a failure.	Contact TNB representative. This may be the result of hardware or cabling failure.
Snubber restored on source A1	I			Source (int)	The snubber board failure has been corrected.	The message is informational.
Started communication with A1 board	I			Board name	The display obtained communication with a desired component. Normal operation will continue.	The message is informational.
Switch is Fault Tripped	A	x			The static switch is fault tripped.	The message is informational.
Switch is now Closed	I				The static switch is now closed.	The message is informational.
Switch is now Open	W	x	x		The static switch is now open.	The message is informational.
Switch Close Initiated Due to A1	I			Reason	A switch-close was initiated.	The message is informational.
Switch Open Initiated Due to A1	W	x		Reason	A switch-open was initiated.	The message is informational.
Switch Close Due to A1 Failed because A2	A	x		Reason	A switch-close attempt failed.	The message is informational.
Switch Open Due to A1 Failed because A2	A	x		Reason, Reason failed	A switch-open attempt failed..	The message is informational.
Switch Close Due to A1 Forcefully completed	W	x		Reason, Reason failed	A switch-close was forcefully completed.	The message is informational.
Switch Open Due to A1 Forcefully completed	W	x		Reason	A switch-open was forcefully completed.	The message is informational.

Event Text	Sev	Req Ack	Active	Arguments Saved with Event	Description	Corrective Action
TCP/IP A1 for 'A2' (A3)	I			State (enabled, disabled), Hostname, IP Address	The TCP/IP functionality is necessary for a number of features. This event logs its start and key parameters to its operation. It occurs only at power-up or reset.	The message always occurs at power-up or reset.
Telnet functionality A1	I			State (enabled, disabled)	The telnet feature can be enabled or disabled by the user. This event logs its state and occurs only at power-up or reset.	The message always occurs at power-up or reset.
TVSS fault	W	x			One of the TVSS modules for the unit is indicating a failure. The unit will operate normally with reduced protection.	Contact TNB representative.
Restored from TVSS fault	I				The TVSS fault condition has cleared.	The message is informational.
Unable to read real time clock	A	x			The current time and date were not available from the real time clock. The unit will use a default time and date. The event log may not function properly.	Contact TNB representative for replacement.
User activated EPO (Emer Power Off)	A	x			EPO was activated by a user.	The message is informational.
Upgrade Logic Software	I				The logic software has been upgraded by the user.	The message is informational.
Upgraded software	I				The user upgraded the display software via TCP/IP.	The message is informational.
User activated EPO (Emer Power Off)	A	x			The EPO or Emergency Power Off circuit has been activated. All breakers have been shunt tripped.	The message is informational.
EPO (Emer Power Off) has been defeated	A	x			The EPO or Emergency Power Off circuit has been defeated (or disabled).	The message is informational.
EPO (Emer Power Off) has been enabled	I					The message is informational.
User reboot of display	I				A command was issued to do a normal reboot of the display. The product will still operate normally.	The message is informational.

① Breaker names: "Input", "SCR On/Off switch", "Bypass", "Remote/Local switch", "Output", "External Trip"

Appendix A-3: Metering Table
(Ref. Section 4.7)

Menu Item	Metering Available
View >> Metering (See Section 4.7.1)	Voltage, PCC, øA-B
	Voltage, PCC, øB-C
	Voltage, PCC, øC-A
	Voltage, DG, øA-B
	Voltage, DG, øB-C
	Voltage, DG, øC-A
	Difference Voltage (PCC - DG), øA-B
	Difference Voltage (PCC - DG), øB-C
	Difference Voltage (PCC - DG), øC-A
	Frequency, PCC
	Frequency, DG
	Difference Frequency (PCC - DG)
	Phase Angle, PCC
	Phase Angle, DG
	Difference Phase Angle (PCC - DG)
View >> Load_Metering (See Section 4.7.2)	Amps, øA
	Amps, øB
	Amps, øC
	kW, øA
	kW, øB
	kW, øC
	kVA, øA
	kVA, øB
	kVA, øC
	PF, øA
	PF, øB
	PF, øC
View >> Harmonics >> PCC (See Section 4.7.3)	THD, 3rd, 5th, 7th, 9th, 11th, 13th, Voltage, PCC, øA-B
	THD, 3rd, 5th, 7th, 9th, 11th, 13th, Voltage, PCC, øB-C
	THD, 3rd, 5th, 7th, 9th, 11th, 13th, Voltage, PCC, øC-A
	THD, 3rd, 5th, 7th, 9th, 11th, 13th, Current, PCC, øA-B
	THD, 3rd, 5th, 7th, 9th, 11th, 13th, Current, PCC, øB-C
	THD, 3rd, 5th, 7th, 9th, 11th, 13th, Current, PCC, øC-A
View >> Harmonics >> DG (See Section 4.7.3)	THD, 3rd, 5th, 7th, 9th, 11th, 13th, Voltage, DG, øA-B
	THD, 3rd, 5th, 7th, 9th, 11th, 13th, Voltage, DG, øB-C
	THD, 3rd, 5th, 7th, 9th, 11th, 13th, Voltage, DG, øC-A
	THD, 3rd, 5th, 7th, 9th, 11th, 13th, Current, DG, øA-B
	THD, 3rd, 5th, 7th, 9th, 11th, 13th, Current, DG, øB-C
	THD, 3rd, 5th, 7th, 9th, 11th, 13th, Current, DG, øC-A
View >> Thermal See Section 4.8.2)	Display Module Temperature
	Cabinet Temperature Status
	Heatsink #1 Temperature Status
	Fan, Unit 1, Status
	Fan, Unit 2, Status

Appendix A-4: Set Points Table
(Ref. Section 4.8)

Menu Item	Set Points Available	Description	Unit	Step Size	Min Set Point	Default Set Point	Max Set Point
Config >> To Connect >> Sync Check (See Section 4.8.1)	Voltage Difference	Percent of nominal rating determining the voltage difference limit to allow the static switch to connect.	%	1	5	10	20
	Frequency Difference	Determines the frequency difference limit to allow the static switch to connect.	Hz	0.10	0.20	0.30	0.50
	Phase Angle Difference	Determines the phase angle difference limit to allow the static switch to connect.	Deg.	1	+5	+20	+30
	Validation Time	Determines the period the other parameters in this window must be in spec before the static switch will connect.	sec.	1.00	1.00	1.00	5.00
Config >> To Connect >> PQ (See Section 4.8.2)	Voltage Threshold Hi	Percent of nominal rating determining the PQ status to allow connection.	%	1	105	110	120
	Voltage Threshold Lo	Percent of nominal rating determining the PQ status to allow connection.	%	1	75	85	95
	Voltage Filter Time	Time required for voltage to remain in spec before connection is allowed.	sec.	1.00	1.00	1.00	5.00
	Frequency Threshold Hi	Percent of nominal rating determining the PQ status to allow connection.	%	0.10	100.20	100.80	107.00
	Frequency Threshold Lo	Percent of nominal rating determining the PQ status to allow connection.	%	0.10	95.00	99.20	99.80
	Frequency Filter Time	Time required for frequency to remain in spec before connection is allowed.	sec.	1.00	1.00	1.00	5.00
Config >> To Disconnect >> PQCheck UV (See Section 4.8.3)	Under Voltage Amber Threshold	Percent of nominal rating under which power quality enters an amber state.	%	1	66	88	93
	Under Voltage Amber Filter Time	Time required for voltage to remain at or below UV threshold before being declared as an amber state.	sec.	0.10	0.10	2.00	5.00
	Under Voltage Red Threshold	Percent of nominal rating under which power quality enters a red state.	%	1	45	50	65
	Under Voltage Red Filter Time	Time required for voltage to remain at or below UV threshold before being declared as a red state.	sec.	0.01	0.01	0.16	5.00
Config >> To Disconnect >> PQCheck OV (See Section 4.8.4)	Over Voltage Amber Threshold	Percent of nominal rating over which power quality enters an amber state.	%	1	105	110	115
	Over Voltage Amber Filter Time	Time required for voltage to remain at or above OV threshold before being declared as an amber state.	sec.	0.10	0.10	1.00	5.00
	Over Voltage Red Threshold	Percent of nominal rating over which power quality enters a red state.	%	1	116	120	135
	Over Voltage Red Filter Time	Time required for voltage to remain at or above OV threshold before being declared as a red state.	sec.	0.01	0.01	0.16	5.00
Config >> To Disconnect >> PQCheck Freq (See Section 4.8.5)	High Frequency Threshold	Percent of nominal frequency rating over which power quality enters a red state.	%	0.01	100.20	100.83	107.00
	High Frequency Filter Time	Time required for frequency to remain at or above OF threshold before being declared as a red state.	sec.	0.01	0.01	0.16	5.00
	Low Frequency Amber	Percent of nominal frequency rating under which power quality enters an amber state.	%	0.01	99.00	99.66	99.80
	Low Frequency Amber Filter Time	Time required for frequency to remain at or below UF threshold before being declared as an amber state.	sec.	0.10	0.10	1.00	5.00
	Low Frequency Red	Percent of nominal frequency rating under which power quality enters a red state.	%	0.01	93.00	95.02	98.0
	Low Frequency Red Filter Time	Time required for frequency to remain at or below UF threshold before being declared as a red state.	sec.	0.01	0.01	0.16	5.00
Config >> To Disconnect >> Load Fault (See Section 4.8.6)	RMS Overload	Percent of nominal current rating over which the RMS Overload Filter Timer is started.	%	5	110	125	150
	RMS Overload Filter Time	Time required for current to remain at or above the threshold before an RMS Overload is declared.	sec.	1.00	20.00	30.00	60.00
	Peak Overload	Percent of nominal current rating over which a Peak Overload is declared.	%	10	200	300	400
	DC Current	Percent of nominal current rating over which the DC Current Filter Timer is started.	%	0.10	0.20	0.50	2.00
	DC Current Filter Time	Time required for the DC current to remain at or above the threshold before a DC Over-Current is declared.	sec.	1.00	0.00	5.00	10.00

Menu Item	Set Points Available	Description	Unit	Step Size	Min Set Point	Default Set Point	Max Set Point
Config >> To Disconnect >> Power Flow (See Section 4.8.7)	Power Flow Threshold	KW Threshold over which the Power Flow Filter Timer is started.	kW	0.01	-20.00	+0.00	+0.00
	Power Flow Filter Time	Time required for the KW to remain at or above the threshold before a Power Flow Fault is declared.	sec.	0.10	0.10	3.00	5.00
Config >> To Disconnect >> Switch Delays (See Section 4.8.8)	Status Stable Delay	Time required for status to be declared as stable.	min.	0.10	1.00	3.00	10.00
	Reconnection Delay - Local	Local reconnection delay setting.	min.	0.10	1.00	5.00	10.00
	Reconnection Delay - Remote	Remote reconnection delay setting.	min.	1.00	1.00	5.00	10.00

Appendix A-5: Modbus Register Map

The following Modbus functions are supported:

For Read-Only (R) registers:

- Read Holding Registers (Function Code 03)

For Read-Write (R/W) registers:

- Read Holding Registers (Function Code 03)
- Preset Multiple Registers (Function Code 16)

Items in Table A-5-1 below, which are designated as the "float" type, are floating-point registers, which use two (2) registers. Floating-point numbers are expressed in the IEEE-754 (32-bit) format. The low-order 16-bit word is placed at the lower Modbus address and the high-order 16-bit word is placed at the higher Modbus address. For example, a reading of 60.0 Hz for "Frequency Rating" would be expressed as follows.

Reg. No.	Data (decimal)	Data (hex)
1303	0	0000
1304	17008	4270

Table A-5-1: Modbus Registers

Reg.	Description	Type	Permission	Unit	Remarks
1001	PCC Voltage, øA-N	uint16	R	V	*
1002	PCC Voltage, øB-N	uint16	R	V	*
1003	PCC Voltage, øC-N	uint16	R	V	*
1004	PCC Voltage, øA-B	uint16	R	V	*
1005	PCC Voltage, øB-C	uint16	R	V	*
1006	PCC Voltage, øC-A	uint16	R	V	*
1007	PCC Current, øA	uint16	R	A	*
1008	PCC Current, øB	uint16	R	A	*
1009	PCC Current, øC	uint16	R	A	*
1010	PCC Peak Current, øA	uint16	R	A	*
1011	PCC Peak Current, øB	uint16	R	A	*
1012	PCC Peak Current, øC	uint16	R	A	*
1013	PCC KW, øA	float	R	KW	*
1015	PCC KW, øB	float	R	KW	*
1017	PCC KW, øC	float	R	KW	*
1019	PCC KVA, øA	float	R	KVA	*
1021	PCC KVA, øB	float	R	KVA	*
1023	PCC KVA, øC	float	R	KVA	*
1025	PCC KVAR, øA	float	R	KVAR	*
1027	PCC KVAR, øB	float	R	KVAR	*
1029	PCC KVAR, øC	float	R	KVAR	*
1031	PCC PF, øA	float	R	N/A	*
1033	PCC PF, øB	float	R	N/A	*
1035	PCC PF, øC	float	R	N/A	*

Reg.	Description	Type	Permission	Unit	Remarks
1037	PCC K-Factor, øA	float	R	N/A	*
1039	PCC K-Factor, øB	float	R	N/A	*
1041	PCC K-Factor, øC	float	R	N/A	*
1043	PCC THD, Voltage, øA-B	float	R	%	*
1045	PCC THD, Voltage, øB-C	float	R	%	*
1047	PCC THD, Voltage, øC-A	float	R	%	*
1049	PCC THD, Current, øA	float	R	%	*
1051	PCC THD, Current, øB	float	R	%	*
1053	PCC THD, Current, øC	float	R	%	*
1055	PCC 1st Harm, Voltage, øA-B	float	R	%	*
1057	PCC 1st Harm, Voltage, øB-C	float	R	%	*
1059	PCC 1st Harm, Voltage, øC-A	float	R	%	*
1061	PCC 2nd Harm, Voltage, øA-B	float	R	%	*
1063	PCC 2nd Harm, Voltage, øB-C	float	R	%	*
1065	PCC 2nd Harm, Voltage, øC-A	float	R	%	*
1067	PCC 3rd Harm, Voltage, øA-B	float	R	%	*
1069	PCC 3rd Harm, Voltage, øB-C	float	R	%	*
1071	PCC 3rd Harm, Voltage, øC-A	float	R	%	*
1073	PCC 4th Harm, Voltage, øA-B	float	R	%	*
1075	PCC 4th Harm, Voltage, øB-C	float	R	%	*
1077	PCC 4th Harm, Voltage, øC-A	float	R	%	*
1079	PCC 5th Harm, Voltage, øA-B	float	R	%	*
1081	PCC 5th Harm, Voltage, øB-C	float	R	%	*
1083	PCC 5th Harm, Voltage, øC-A	float	R	%	*
1085	PCC 6th Harm, Voltage, øA-B	float	R	%	*
1087	PCC 6th Harm, Voltage, øB-C	float	R	%	*
1089	PCC 6th Harm, Voltage, øC-A	float	R	%	*
1091	PCC 7th Harm, Voltage, øA-B	float	R	%	*
1093	PCC 7th Harm, Voltage, øB-C	float	R	%	*
1095	PCC 7th Harm, Voltage, øC-A	float	R	%	*
1097	PCC 8th Harm, Voltage, øA-B	float	R	%	*
1099	PCC 8th Harm, Voltage, øB-C	float	R	%	*
1101	PCC 8th Harm, Voltage, øC-A	float	R	%	*
1103	PCC 9th Harm, Voltage, øA-B	float	R	%	*
1105	PCC 9th Harm, Voltage, øB-C	float	R	%	*
1107	PCC 9th Harm, Voltage, øC-A	float	R	%	*
1109	PCC 10th Harm, Voltage, øA-B	float	R	%	*
1111	PCC 10th Harm, Voltage, øB-C	float	R	%	*
1113	PCC 10th Harm, Voltage, øC-A	float	R	%	*
1115	PCC 11th Harm, Voltage, øA-B	float	R	%	*
1117	PCC 11th Harm, Voltage, øB-C	float	R	%	*
1119	PCC 11th Harm, Voltage, øC-A	float	R	%	*
1121	PCC 12th Harm, Voltage, øA-B	float	R	%	*
1123	PCC 12th Harm, Voltage, øB-C	float	R	%	*
1125	PCC 12th Harm, Voltage, øC-A	float	R	%	*

Reg.	Description	Type	Permission	Unit	Remarks
1127	PCC 13th Harm, Voltage, øA-B	float	R	%	*
1129	PCC 13th Harm, Voltage, øB-C	float	R	%	*
1131	PCC 13th Harm, Voltage, øC-A	float	R	%	*
1133	PCC 1st Harm, Current, øA	float	R	%	*
1135	PCC 1st Harm, Current, øB	float	R	%	*
1137	PCC 1st Harm, Current, øC	float	R	%	*
1139	PCC 2nd Harm, Current, øA	float	R	%	*
1141	PCC 2nd Harm, Current, øB	float	R	%	*
1143	PCC 2nd Harm, Current, øC	float	R	%	*
1145	PCC 3rd Harm, Current, øA	float	R	%	*
1147	PCC 3rd Harm, Current, øB	float	R	%	*
1149	PCC 3rd Harm, Current, øC	float	R	%	*
1151	PCC 4th Harm, Current, øA	float	R	%	*
1153	PCC 4th Harm, Current, øB	float	R	%	*
1155	PCC 4th Harm, Current, øC	float	R	%	*
1157	PCC 5th Harm, Current, øA	float	R	%	*
1159	PCC 5th Harm, Current, øB	float	R	%	*
1161	PCC 5th Harm, Current, øC	float	R	%	*
1163	PCC 6th Harm, Current, øA	float	R	%	*
1165	PCC 6th Harm, Current, øB	float	R	%	*
1167	PCC 6th Harm, Current, øC	float	R	%	*
1169	PCC 7th Harm, Current, øA	float	R	%	*
1171	PCC 7th Harm, Current, øB	float	R	%	*
1173	PCC 7th Harm, Current, øC	float	R	%	*
1175	PCC 8th Harm, Current, øA	float	R	%	*
1177	PCC 8th Harm, Current, øB	float	R	%	*
1179	PCC 8th Harm, Current, øC	float	R	%	*
1181	PCC 9th Harm, Current, øA	float	R	%	*
1183	PCC 9th Harm, Current, øB	float	R	%	*
1185	PCC 9th Harm, Current, øC	float	R	%	*
1187	PCC 10th Harm, Current, øA	float	R	%	*
1189	PCC 10th Harm, Current, øB	float	R	%	*
1191	PCC 10th Harm, Current, øC	float	R	%	*
1193	PCC 11th Harm, Current, øA	float	R	%	*
1195	PCC 11th Harm, Current, øB	float	R	%	*
1197	PCC 11th Harm, Current, øC	float	R	%	*
1199	PCC 12th Harm, Current, øA	float	R	%	*
1201	PCC 12th Harm, Current, øB	float	R	%	*
1203	PCC 12th Harm, Current, øC	float	R	%	*
1205	PCC 13th Harm, Current, øA	float	R	%	*
1207	PCC 13th Harm, Current, øB	float	R	%	*
1209	PCC 13th Harm, Current, øC	float	R	%	*
1211	PCC Zero Sequence, øA	float	R	N/A	*
1213	PCC Zero Sequence, øB	float	R	N/A	*
1215	PCC Zero Sequence, øC	float	R	N/A	*

Reg.	Description	Type	Permission	Unit	Remarks
1217	PCC Negative Sequence, øA	float	R	N/A	*
1219	PCC Negative Sequence, øB	float	R	N/A	*
1221	PCC Negative Sequence, øC	float	R	N/A	*
1223	PCC Positive Sequence, øA	float	R	N/A	*
1225	PCC Positive Sequence, øB	float	R	N/A	*
1227	PCC Positive Sequence, øC	float	R	N/A	*
1229	PCC DC Current, øA	uint16	R	A	*
1230	PCC DC Current, øB	uint16	R	A	*
1231	PCC DC Current, øC	uint16	R	A	*
1232	Frequency	float	R	Hz	*
1234	Phase Angle	uint16	R	Deg.	*
1235	Input Breaker Status	uint16	R	N/A	0 = Open, 1 = Closed
1236	Output Breaker Status	uint16	R	N/A	0 = Open, 1 = Closed
1237	Bypass Breaker Status	uint16	R	N/A	0 = Open, 1 = Closed
1238	Remote Mode	uint16	R	N/A	0 = Disabled, 1 = Enabled
1239	Switch Status	uint16	R	N/A	0 = Unknown, 1 = Connected 2 = Disconnected 3 = Commanding GD 4 = Fault Tripped
1240	DG Available Status	uint16	R	N/A	0 = Red, 1 = Amber, 2 = Green
1241	PCC Available Status	uint16	R	N/A	0 = Red, 1 = Amber, 2 = Green
1242	Sync Status	uint16	R	N/A	1 = Out of Sync, 2 = In Sync
1243	Fan #1 State	uint16	R	N/A	0 = Normal, 1 = Failed 2 elements with offset of 1000
1244	Cabinet Temperature	uint16	R	N/A	0 = Normal, 1 = Over Temperature
1245	Heatsink #1 Temperature	uint16	R	N/A	0 = Normal, 1 = Over Temperature
1246	Door Status	uint16	R	N/A	0 = Opened, 1 = Closed
1247	Power Supply #1 Status	uint16	R	N/A	Bit 0: (Set = Power Supply 24V Failure) Bit 1: (Set = Power Supply DC Failure) Bit 2: (Set = Power Supply AC Failure)
1301	Voltage Rating	uint16	R/W	V	
1302	Current Rating	uint16	R/W	A	
1303	Frequency Rating	float	R/W	Hz	
1305	Rotation	uint16	R/W	N/A	0 = ABC, 1 = CBA
1306	Auto Reconnect	uint16	R/W	N/A	0 = Enable, 1 = Disable
1307	Remote Shunt Trips	uint16	R/W	N/A	0 = Disable, 1 = Enable
1308	FX Command	uint16	R/W	N/A	Write 10 to Connect, 11 to Disconnect.
1411	Month	uint16	R	N/A	Range: 1-12
1412	Day	uint16	R	N/A	Range: 1-31
1413	Year	uint16	R	N/A	Range: 1970-2030
1414	Hour	uint16	R	N/A	Range: 0-23
1415	Minute	uint16	R	N/A	Range: 0-59
1416	Second	uint16	R	N/A	Range: 0-59
1417	Millisecond	uint16	R	N/A	Range: 0-999
1501	User Inputs, UIB1	uint16	R	N/A	

Reg.	Description	Type	Permission	Unit	Remarks
1502	Output Relays, UIB1	uint16	R	N/A	
1503	Analog Inputs, UIB1	uint16	R	N/A	
1504	User Inputs, UIB2	uint16	R	N/A	
1505	Output Relays, UIB2	uint16	R	N/A	
1506	Analog Inputs, UIB2	uint16	R	N/A	
2001	DG Voltage, øA-N	uint16	R	V	*
2002	DG Voltage, øB-N	uint16	R	V	*
2003	DG Voltage, øC-N	uint16	R	V	*
2004	DG Voltage, øA-B	uint16	R	V	*
2005	DG Voltage, øB-C	uint16	R	V	*
2006	DG Voltage, øC-A	uint16	R	V	*
2007	DG Current, øA	uint16	R	A	*
2008	DG Current, øB	uint16	R	A	*
2009	DG Current, øC	uint16	R	A	*
2010	DG Peak Current, øA	uint16	R	A	*
2011	DG Peak Current, øB	uint16	R	A	*
2012	DG Peak Current, øC	uint16	R	A	*
2013	DG KW, øA	float	R	KW	*
2015	DG KW, øB	float	R	KW	*
2017	DG KW, øC	float	R	KW	*
2019	DG KVA, øA	float	R	KVA	*
2021	DG KVA, øB	float	R	KVA	*
2023	DG KVA, øC	float	R	KVA	*
2025	DG KVAR, øA	float	R	KVAR	*
2027	DG KVAR, øB	float	R	KVAR	*
2029	DG KVAR, øC	float	R	KVAR	*
2031	DG PF, øA	float	R	N/A	*
2033	DG PF, øB	float	R	N/A	*
2035	DG PF, øC	float	R	N/A	*
2037	DG K-Factor, øA	float	R	N/A	*
2039	DG K-Factor, øB	float	R	N/A	*
2041	DG K-Factor, øC	float	R	N/A	*
2043	DG THD, Voltage, øA-B	float	R	%	*
2045	DG THD, Voltage, øB-C	float	R	%	*
2047	DG THD, Voltage, øC-A	float	R	%	*
2049	DG THD, Current, øA	float	R	%	*
2051	DG THD, Current, øB	float	R	%	*
2053	DG THD, Current, øC	float	R	%	*
2055	DG 1st Harm, Voltage, øA-B	float	R	%	*
2057	DG 1st Harm, Voltage, øB-C	float	R	%	*
2059	DG 1st Harm, Voltage, øC-A	float	R	%	*
2061	DG 2nd Harm, Voltage, øA-B	float	R	%	*
2063	DG 2nd Harm, Voltage, øB-C	float	R	%	*
2065	DG 2nd Harm, Voltage, øC-A	float	R	%	*

Reg.	Description	Type	Permission	Unit	Remarks
2067	DG 3rd Harm, Voltage, øA-B	float	R	%	*
2069	DG 3rd Harm, Voltage, øB-C	float	R	%	*
2071	DG 3rd Harm, Voltage, øC-A	float	R	%	*
2073	DG 4th Harm, Voltage, øA-B	float	R	%	*
2075	DG 4th Harm, Voltage, øB-C	float	R	%	*
2077	DG 4th Harm, Voltage, øC-A	float	R	%	*
2079	DG 5th Harm, Voltage, øA-B	float	R	%	*
2081	DG 5th Harm, Voltage, øB-C	float	R	%	*
2083	DG 5th Harm, Voltage, øC-A	float	R	%	*
2085	DG 6th Harm, Voltage, øA-B	float	R	%	*
2087	DG 6th Harm, Voltage, øB-C	float	R	%	*
2089	DG 6th Harm, Voltage, øC-A	float	R	%	*
2091	DG 7th Harm, Voltage, øA-B	float	R	%	*
2093	DG 7th Harm, Voltage, øB-C	float	R	%	*
2095	DG 7th Harm, Voltage, øC-A	float	R	%	*
2097	DG 8th Harm, Voltage, øA-B	float	R	%	*
2099	DG 8th Harm, Voltage, øB-C	float	R	%	*
2101	DG 8th Harm, Voltage, øC-A	float	R	%	*
2103	DG 9th Harm, Voltage, øA-B	float	R	%	*
2105	DG 9th Harm, Voltage, øB-C	float	R	%	*
2107	DG 9th Harm, Voltage, øC-A	float	R	%	*
2109	DG 10th Harm, Voltage, øA-B	float	R	%	*
2111	DG 10th Harm, Voltage, øB-C	float	R	%	*
2113	DG 10th Harm, Voltage, øC-A	float	R	%	*
2115	DG 11th Harm, Voltage, øA-B	float	R	%	*
2117	DG 11th Harm, Voltage, øB-C	float	R	%	*
2119	DG 11th Harm, Voltage, øC-A	float	R	%	*
2121	DG 12th Harm, Voltage, øA-B	float	R	%	*
2123	DG 12th Harm, Voltage, øB-C	float	R	%	*
2125	DG 12th Harm, Voltage, øC-A	float	R	%	*
2127	DG 13th Harm, Voltage, øA-B	float	R	%	*
2129	DG 13th Harm, Voltage, øB-C	float	R	%	*
2131	DG 13th Harm, Voltage, øC-A	float	R	%	*
2133	DG 1st Harm, Current, øA	float	R	%	*
2135	DG 1st Harm, Current, øB	float	R	%	*
2137	DG 1st Harm, Current, øC	float	R	%	*
2139	DG 2nd Harm, Current, øA	float	R	%	*
2141	DG 2nd Harm, Current, øB	float	R	%	*
2143	DG 2nd Harm, Current, øC	float	R	%	*
2145	DG 3rd Harm, Current, øA	float	R	%	*
2147	DG 3rd Harm, Current, øB	float	R	%	*
2149	DG 3rd Harm, Current, øC	float	R	%	*
2151	DG 4th Harm, Current, øA	float	R	%	*
2153	DG 4th Harm, Current, øB	float	R	%	*
2155	DG 4th Harm, Current, øC	float	R	%	*

Reg.	Description	Type	Permission	Unit	Remarks
2157	DG 5th Harm, Current, øA	float	R	%	*
2159	DG 5th Harm, Current, øB	float	R	%	*
2161	DG 5th Harm, Current, øC	float	R	%	*
2163	DG 6th Harm, Current, øA	float	R	%	*
2165	DG 6th Harm, Current, øB	float	R	%	*
2167	DG 6th Harm, Current, øC	float	R	%	*
2169	DG 7th Harm, Current, øA	float	R	%	*
2171	DG 7th Harm, Current, øB	float	R	%	*
2173	DG 7th Harm, Current, øC	float	R	%	*
2175	DG 8th Harm, Current, øA	float	R	%	*
2177	DG 8th Harm, Current, øB	float	R	%	*
2179	DG 8th Harm, Current, øC	float	R	%	*
2181	DG 9th Harm, Current, øA	float	R	%	*
2183	DG 9th Harm, Current, øB	float	R	%	*
2185	DG 9th Harm, Current, øC	float	R	%	*
2187	DG 10th Harm, Current, øA	float	R	%	*
2189	DG 10th Harm, Current, øB	float	R	%	*
2191	DG 10th Harm, Current, øC	float	R	%	*
2193	DG 11th Harm, Current, øA	float	R	%	*
2195	DG 11th Harm, Current, øB	float	R	%	*
2197	DG 11th Harm, Current, øC	float	R	%	*
2199	DG 12th Harm, Current, øA	float	R	%	*
2201	DG 12th Harm, Current, øB	float	R	%	*
2203	DG 12th Harm, Current, øC	float	R	%	*
2205	DG 13th Harm, Current, øA	float	R	%	*
2207	DG 13th Harm, Current, øB	float	R	%	*
2209	DG 13th Harm, Current, øC	float	R	%	*
2211	DG Zero Sequence, øA	float	R	N/A	*
2213	DG Zero Sequence, øB	float	R	N/A	*
2215	DG Zero Sequence, øC	float	R	N/A	*
2217	DG Negative Sequence, øA	float	R	N/A	*
2219	DG Negative Sequence, øB	float	R	N/A	*
2221	DG Negative Sequence, øC	float	R	N/A	*
2223	DG Positive Sequence, øA	float	R	N/A	*
2225	DG Positive Sequence, øB	float	R	N/A	*
2227	DG Positive Sequence, øC	float	R	N/A	*
2229	DG DC Current, øA	uint16	R	A	*
2230	DG DC Current, øB	uint16	R	A	*
2231	DG DC Current, øC	uint16	R	A	*
2232	DG Frequency	float	R	Hz	*
2234	DG Phase Angle	uint16	R	Deg.	*
2243	Fan #2 State	uint16	R	N/A	0 = Normal, 1 = Failed 2 elements with offset of 1000

* Equivalent PCC & DG registers are offset by 1000, (i.e., DG register address = PCC register address + 1000).

Appendix A-6: PS1 Indicator Table
(Reference Sec. 5.4.1.1)

LED #	Color	Status	Indication
LD1	Green	On	Power is available at output J1.
LD1	Green	Off	Power is not available at J1 or F5 is open.
LD2	Green	On	Power is available from Source1
LD2	Green	Off	Either Source1 is not available or F16 and/or F19 are open.
LD3	Green	On	Power is available from Source2
LD3	Green	Off	Either Source2 is not available or F1 and/or F6 are open.
LD4	Green	On	Power is available at output J2.
LD4	Green	Off	Power is not available at J2 or F8 is open.
LD5	Green	On	Power is available from Source1
LD5	Green	Off	Either Source1 is not available or F18 and/or F21 are open.
LD6	Green	On	Power is available at output J3.
LD6	Green	Off	Power is not available at J3 or F15 is open.
LD7	Green	On	Power is available from Source2
LD7	Green	Off	Either Source2 is not available or F3 and/or F4 are open.
LD8	Green	On	Power is available at output J4.
LD8	Green	Off	Power is not available at J4 or F22 is open.
LD9	Green	On	Power is available from the Output
LD9	Green	Off	Either the Output is not available or F11 and/or F14 are open.
LD10	Green	On	Power is available from Source2
LD10	Green	Off	Either Source2 is not available or F2 and/or F7 are open.
LD11	Green	On	Power is available at output J5.
LD11	Green	Off	Power is not available at J5 or F23 is open.
LD12	Green	On	Power is available at output J6.
LD12	Green	Off	Power is not available at J6 or F24 is open.
LD13	Green	On	Power is available at output J7.
LD13	Green	Off	Power is not available at J7 or F25 is open.
LD14	Green	On	Power is available at output J8.
LD14	Green	Off	Power is not available at J8 or F27 is open.
LD15	Green	On	Power is available at J10.
LD15	Green	Off	Power is not available at J10 or F28 is open.
LD16	Green	On	Power is available at J11.
LD16	Green	Off	Power is not available at J11 or F29 is open.
LD17	Green	On	Local +5V supply is functional and status/fault information is available at J9.
LD17	Green	Off	Local +5V supply has failed or F26 is open.

Appendix A-7: FX Display Board LED Indicators Tables
(Ref. Section 5.4.2)

Table A7-1: FX Status LEDs

LD1	LD2	Indication
Off	On	Normal Operation
Blinking	Off	Abnormal Operation (Indication of error or failure.)

Table A7-2: TCP/IP Network Connection Status LEDs

LD3	LD4	Indication
On	Occasional Flashing	Normal state when connected to an active TCP/IP network.
Off	Off	Normal state when not connected to an active TCP/IP network.

Appendix A-8: Main Logic Board LED Indicator Table
(Ref. Section 5.4.3)

Control Section	LED #	Indication	
CONTROL POWER LEDs			
Source 1	LD1	3.3volts	ON = OK
	LD2	+15volts	ON = OK
	LD3	28volts	ON = OK
	LD4	-15volts	ON = OK
Source 2	LD5	3.3volts	ON = OK
	LD6	+15volts	ON = OK
	LD7	28volts	ON = OK
	LD8	-15volts	ON = OK
Gate	LD9	3.3volts	ON = OK
	LD10	+15volts	ON = OK
	LD11	28volts	ON = OK
	LD12	-15volts	ON = OK
DSP LEDs			
Source 1	LD13	DSP Heartbeat LED	Blinking = OK
Source 2	LD14	DSP Heartbeat LED	Blinking = OK
Gate	LD15	DSP Heartbeat LED	Blinking = OK
FAULT LEDs			
Source 1	LD16	S1 UV10: Source 1 has reached 10% under-voltage limit ON = Fault	
Source 1	LD17	S1 UV30: Source 1 has reached 30% under-voltage limit ON = Fault	
Source 1	LD18	S1 OV: Source 1 has reached 10% over-voltage limit ON = Fault	
Source 1	LD19	S1 OL: Source 1 has reached current overload limit ON = Fault	
Source 1	LD20	S1 PKOL: Source 1 has reached peak current overload limit ON = Fault	
Source 1	LD21	S1 BYPASS: Source 1 Bypass breaker has been closed ON = Breaker Closed	
Source 1	LD22	S1 OPEN: Source 1 open SCR has been detected ON = Open SCR Fault	
Source 1	LD23	S1 SHORT: Source 1 shorted SCR has been detected ON = Shorted SCR Fault	
Source 1	LD24	S1 INHIBIT: Source 1 Transfer has been inhibited ON = Transfer Inhibited	
Source 1	LD25	S1 SPARE: Source 1 Spare LED *NOT YET IDENTIFIED*	
Source 2	LD26	S2 UV10: Source 2 has reached 10% under-voltage limit ON = Fault	
Source 2	LD27	S2 UV30: Source 2 has reached 30% under-voltage limit ON = Fault	

Control Section	LED #	Indication
Source 2	LD28	S2 OV: Source 2 has reached 10% over-voltage limit ON = Fault
Source 2	LD29	S2 OL: Source 2 has reached current overload limit ON = Fault
Source 2	LD30	S2 PKOL: Source 2 has reached peak current overload limit ON = Fault
Source 2	LD31	S2 BYPASS: Source 2 Bypass breaker has been closed ON = Breaker Closed
Source 2	LD32	S2 OPEN: Source 2 open SCR has been detected ON = Open SCR Fault
Source 2	LD33	S2 SHORT: Source 2 shorted SCR has been detected ON = Shorted SCR Fault
Source 2	LD34	S2 INHIBIT: Source 2 Transfer has been inhibited ON = Transfer Inhibited
Source 2	LD35	S2 SPARE: Source 2 Spare LED *NOT YET IDENTIFIED*
CRASH PANEL LEDs		
Gate	LD36	S1 PREF: Indicates source 1 is preferred source ON = S1 Preferred
Gate	LD37	S2 PREF: Indicates source 2 is preferred source ON = S2 Preferred
Gate	LD38	FAULT RESET: Indicates switch 6 (Fault Reset) has been pushed ON = Switch has been pressed
Gate	LD39	RETRAN ON/OFF: Indicates auto retransfer function is on or off ON = Function is active
FAULT LEDs		
Gate	LD40	S1 ON: Source 1 SCRs are turned on ON = Side 1 ON
Gate	LD41	S2 ON: Source 2 SCRs are turned on ON = Side 2 ON
Gate	LD42	PH ERROR: Sources 1 and 2 are out of the phase window limit ON = Fault
Gate	LD43	VCC FAULT: Analog control power has failed (any section) ON = Fault
Gate	LD44	TEMP FAULT: Cabinet has reached over temperature limit, ON=Fault
Gate	LD45	GATE LOCK: SMARTSWITCH has gate locked the SCRs ON = Fault
Gate	LD46	FAN FAULT: Fan fail detector indicates a failed fan ON = Fault
Gate	LD47	FREQ ERROR: Source 1 or 2 is out of frequency window limit ON = Fault
Gate	LD48	GATE DR FAULT: Gate control DSP has received fault signal from either Gate Boards ON = Fault

Control Section	LED #	Indication
Gate	LD49	COMM ERR: Communication error exists between Gate control DSP and either source control DSPs, gate drive microprocessors, gate control section PIC microprocessor, or F7 microprocessor ON = Fault
Gate	LD50	EPO: Local EPO pushbutton or remote EPO pushbutton has been pressed ON = Pushbutton has been pushed
PIC MICROPROCESSOR LEDs		
Gate	LD51	PIC microprocessor heartbeat LED Blinking = OK

Appendix A-9: Gate Drive Board LED Indicator Table
(Ref. Section 5.4.4)

LED #	Color	Status	Indication
LD1	Green	On	+5VCC is available
LD1	Green	Off	+5VCC is not available
LD2	Green	Flashing	Microprocessor is functioning normally
LD2	Green	Off or on	Microprocessor in not functioning normally
LD3	Green	On	+5VAUX is available
LD3	Green	Off	+5VAUX is not available
LD4	Green	On	Gate voltage for A-phase reverse SCR is available at J6
LD4	Green	Off	Gate voltage for A-phase reverse SCR is not available at J6
LD5	Green	On	+15V_A is available
LD5	Green	Off	+15V_A is not available
LD6	Green	On	-15V_A is available
LD6	Green	Off	-15V_A is not available
LD7	Red	On	A-phase analog voltage is out of tolerance
LD7	Red	Off	A-phase analog voltage is within tolerance
LD8	Green	On	B1 bus is available for A-phase control supplies
LD8	Green	Off	B1 bus is unavailable, source not available or F6 is open
LD9	Green	On	B2 bus is available for A-phase control supplies
LD9	Green	Off	B2 bus is unavailable, source not available or F8 is open
LD10	Green	On	Gate voltage for A-phase forward SCR is available at J6
LD10	Green	Off	Gate voltage for A-phase forward SCR is not available at J6
LD11	Green	On	Gate voltage for B-phase reverse SCR is available at J8
LD11	Green	Off	Gate voltage for B-phase reverse SCR is not available at J8
LD12	Green	On	+15V_B is available
LD12	Green	Off	+15V_B is not available
LD13	Green	On	-15V_B is available
LD13	Green	Off	-15V_B is not available
LD14	Red	On	B-phase analog voltage is out of tolerance
LD14	Red	Off	B-phase analog voltage is within tolerance
LD15	Green	On	B1 bus is available for B-phase control supplies
LD15	Green	Off	B1 bus is unavailable, source not available or F10 is open
LD16	Green	On	B2 bus is available for B-phase control supplies
LD16	Green	Off	B2 bus is unavailable, source not available or F12 is open
LD17	Green	On	Gate voltage for B-phase forward SCR is available at J8
LD17	Green	Off	Gate voltage for B-phase forward SCR is not available at J8
LD18	Green	On	+15V_C is available
LD18	Green	Off	+15V_C is not available
LD19	Green	On	-15V_C is available
LD19	Green	Off	-15V_C is not available
LD20	Green	On	Gate voltage for CB-phase reverse SCR is available at J10

LED #	Color	Status	Indication
LD20	Green	Off	Gate voltage for C-phase reverse SCR is not available at J10
LD21	Red	On	C-phase analog voltage is out of tolerance
LD21	Red	Off	C-phase analog voltage is within tolerance
LD22	Green	On	B1 bus is available for C-phase control supplies
LD22	Green	Off	B1 bus is unavailable, source not available or F14 is open
LD23	Green	On	B2 bus is available for C-phase control supplies
LD23	Green	Off	B2 bus is unavailable, source not available or F16 is open
LD24	Green	On	Gate voltage for C-phase forward SCR is available at J10
LD24	Green	Off	Gate voltage for C-phase forward SCR is not available at J10

Appendix A-10: User-Interface Board LED Indicator Table
(Ref. Section 5.4.5)

LED #	Indication
LD1	15V power supply input power is present
LD2	+15V power supply (optional) output power is present
LD3	User Input 8 is active
LD4	User Input 7 is active
LD5	User Input 6 is active
LD6	User Input 5 is active
LD7	User Input 4 is active
LD8	User Input 3 is active
LD9	TVSS Fail #2 input is active
LD10	TVSS Fail #1 input is active
LD11	-15V power supply (optional) output power is present
LD12	+5V power supply output power is present
LD13	Alarm 1 Relay is active
LD14	Alarm 6 Relay is active
LD15	Alarm 5 Relay is active
LD16	User-Interface Board microprocessor is running
LD17	Alarm 4 Relay is active
LD18	Alarm 2 Relay is active
LD19	Alarm 3 Relay is active
LD20	Summary Alarm Relay is active
LD21	Alarm 7 Relay is active

Appendix B-1: PS1 LED Indicators Illustration

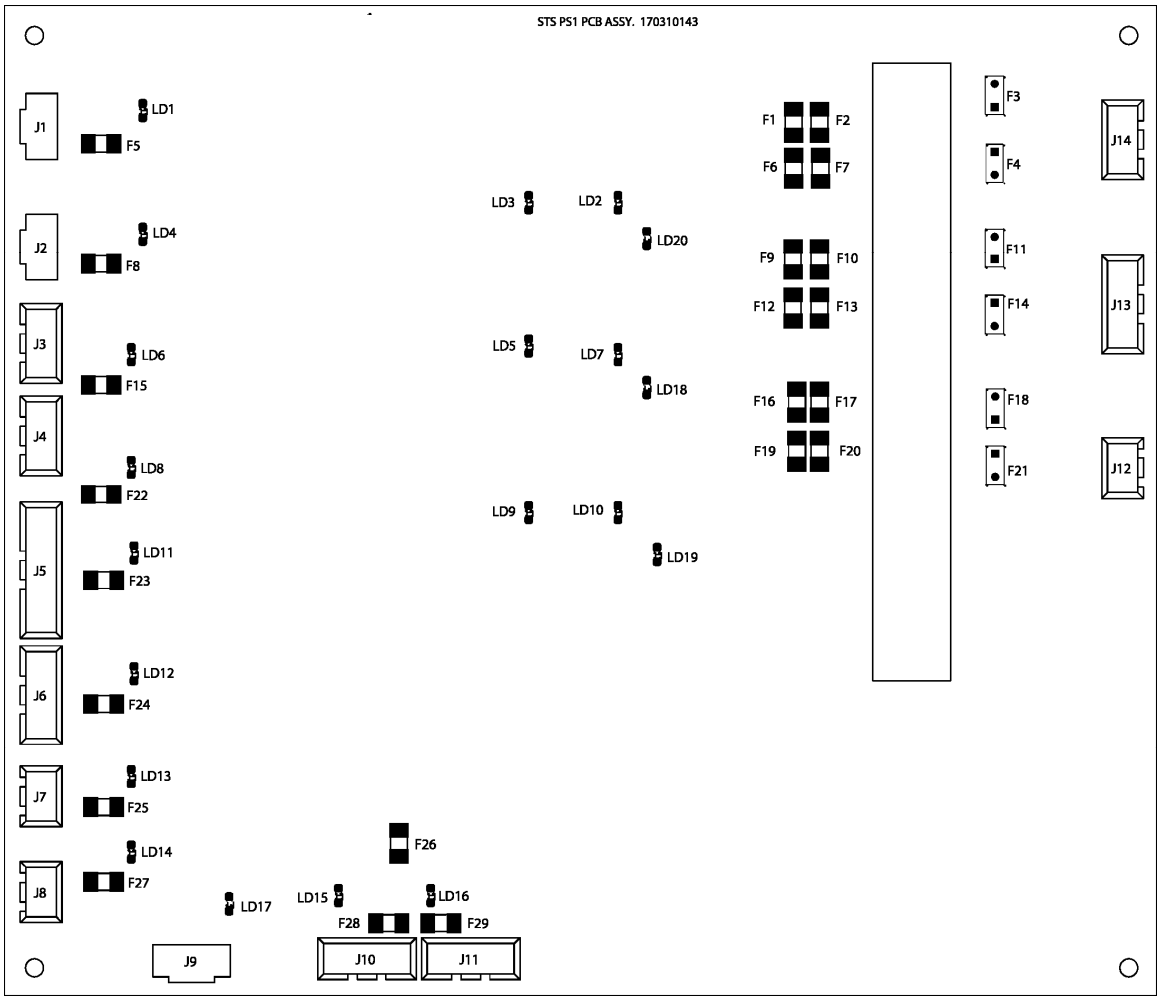

Appendix B-2: FX Display Board Illustration

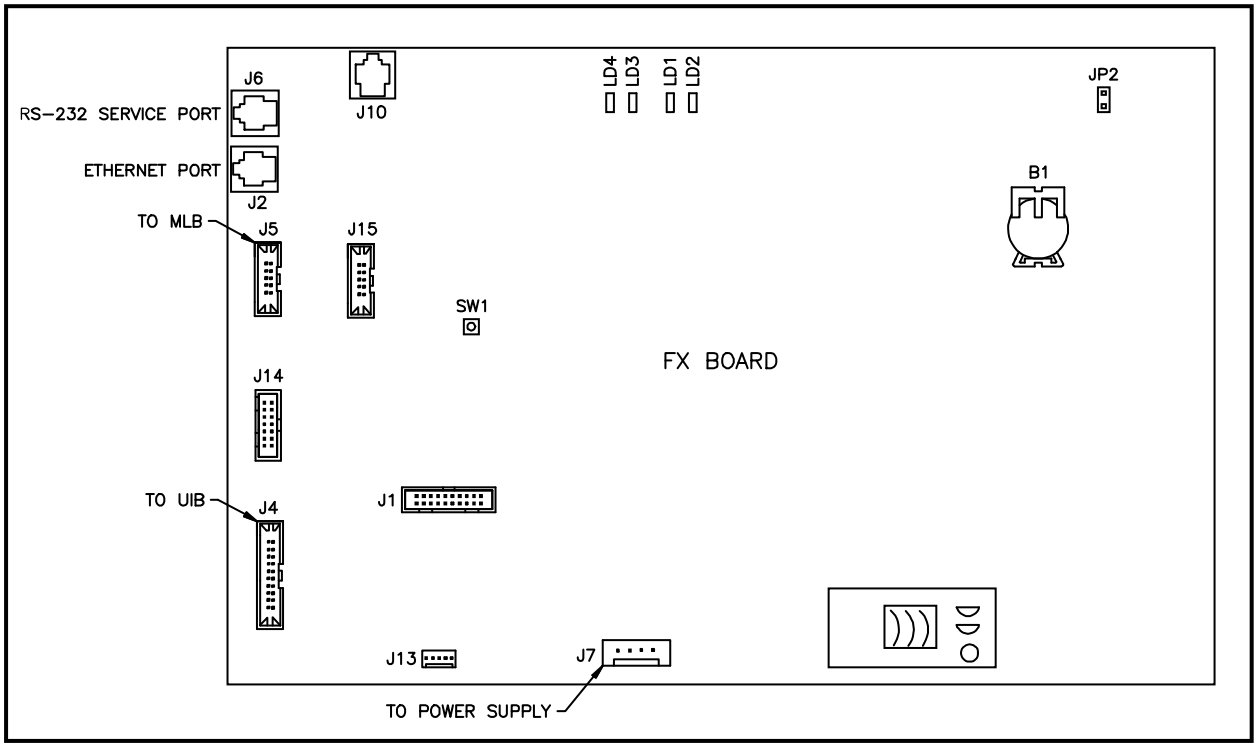

Appendix B-3: Main Logic Board Illustration

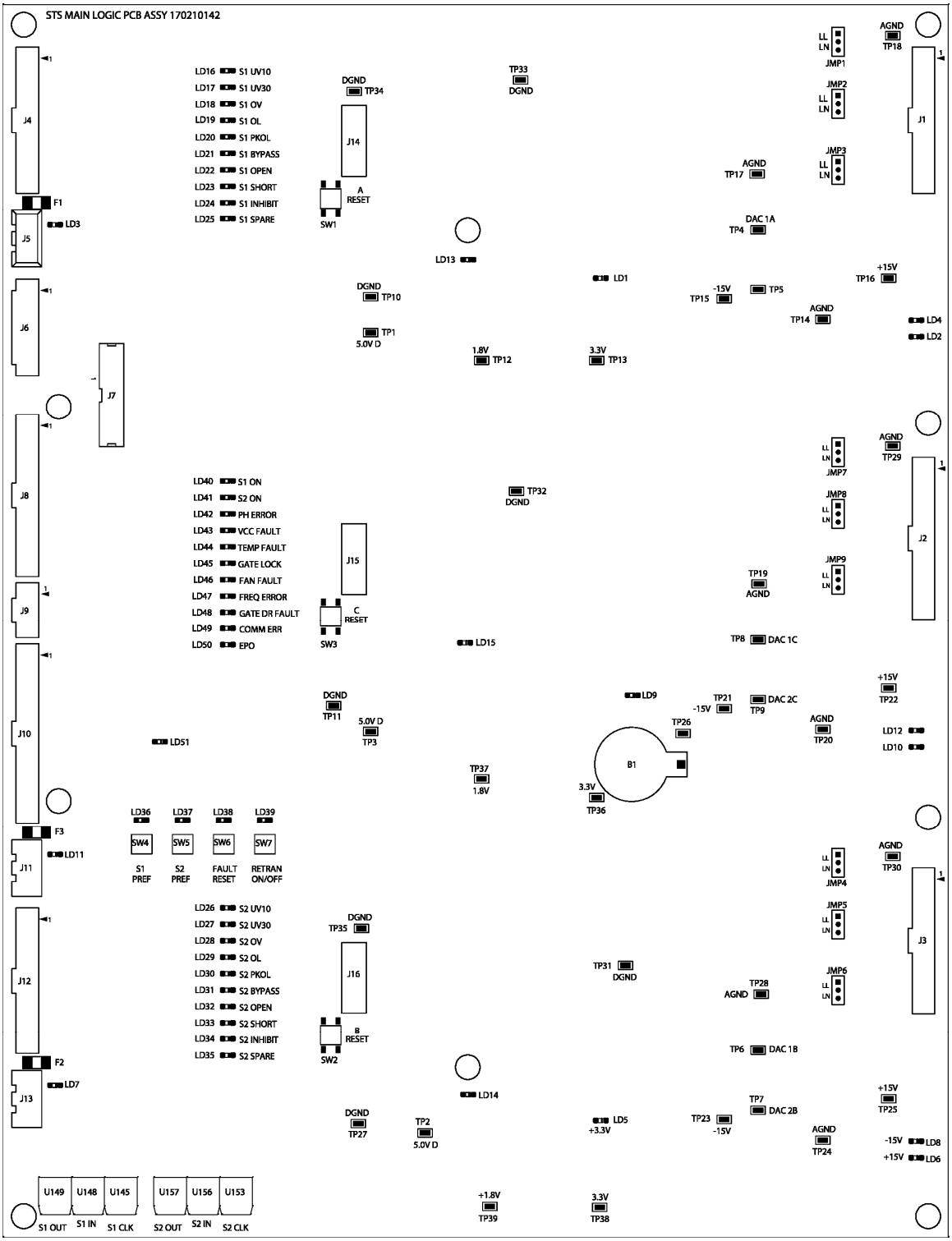

Appendix B-4: Gate Drive Board Illustration

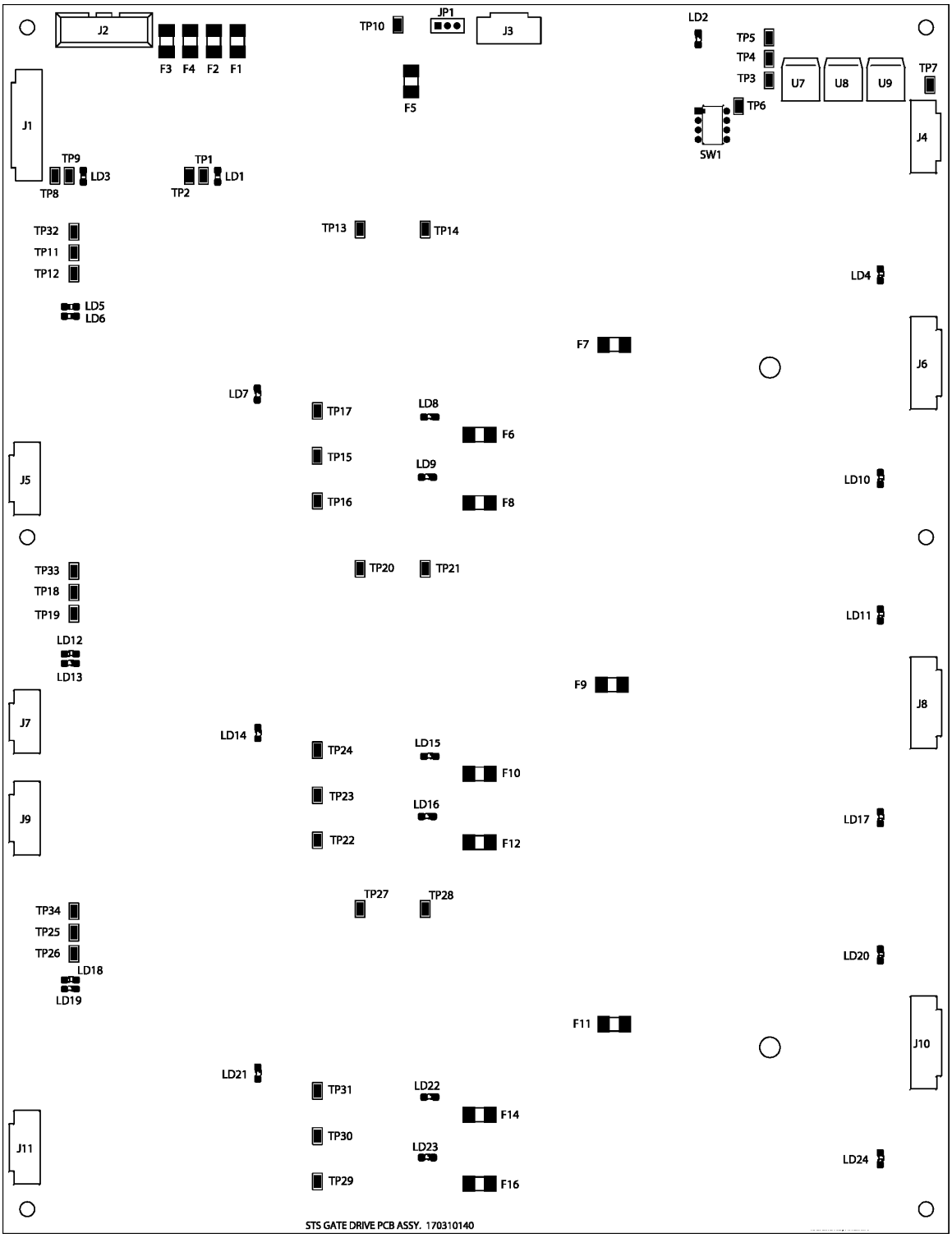

Appendix B-5: User Interface Board Illustration

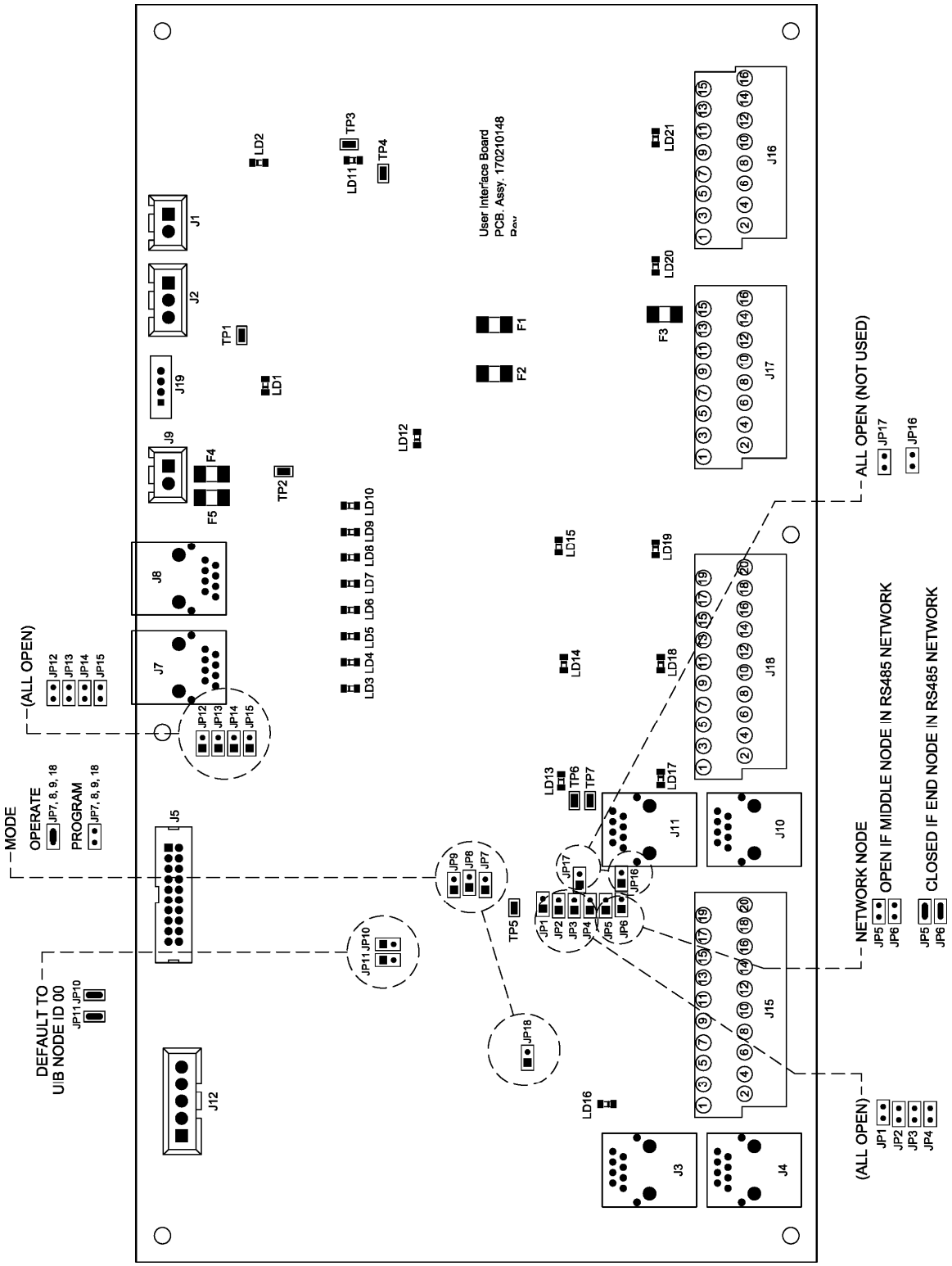

Appendix B-6: Docking Board Illustration

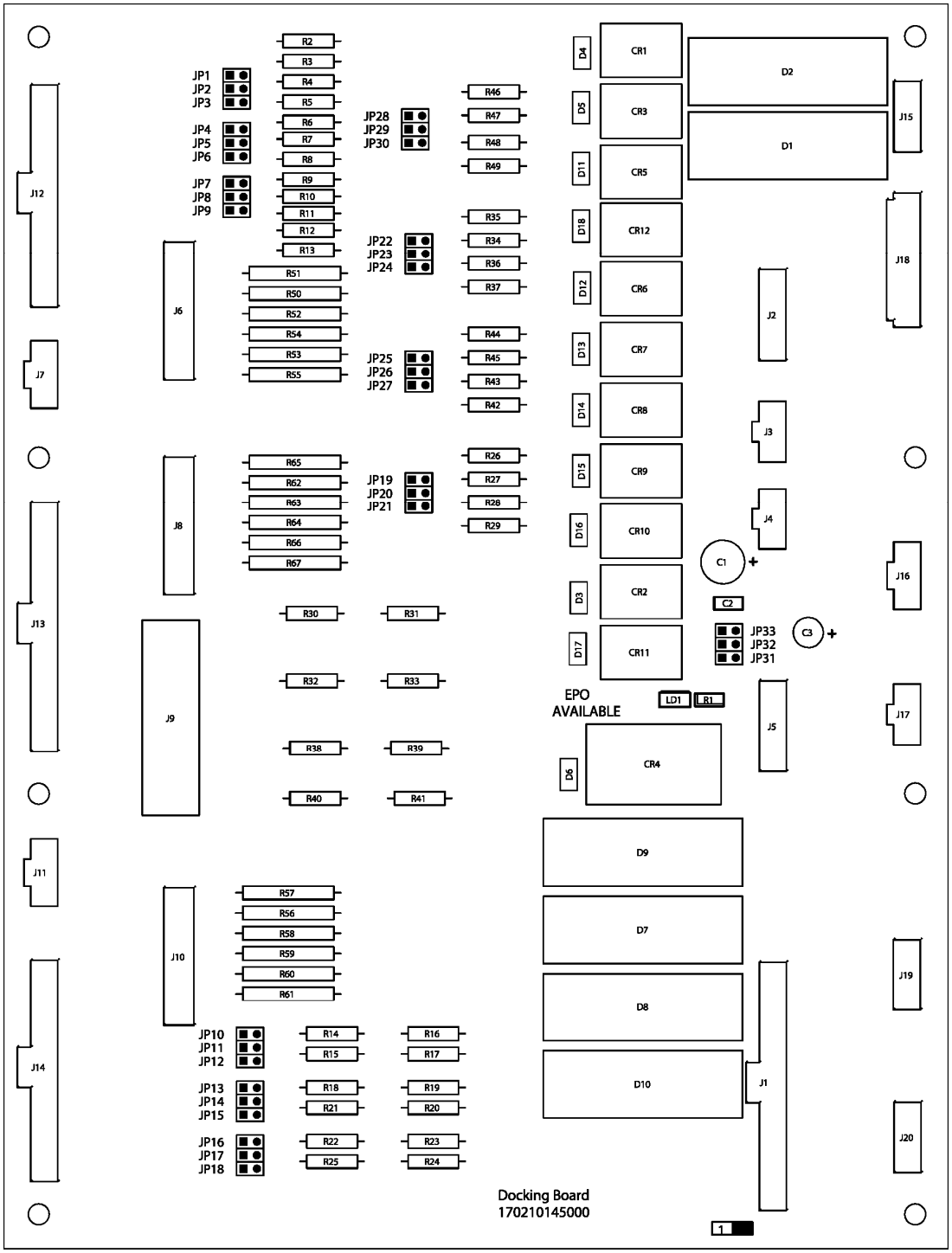

Appendix C-1: Miscellaneous Notes

1.0 Ethernet

- *Issue*: Ethernet may not function if the unit powers up without cable install.
- *Corrective Action*: Verify that all communication connections are secured prior to start-up of the unit.

2.0 Day Light Savings Time

- *Issue*: The unit does not adjust for Day Light Savings Time.
- *Corrective Action*: This adjustment must be performed manually from the user interface.

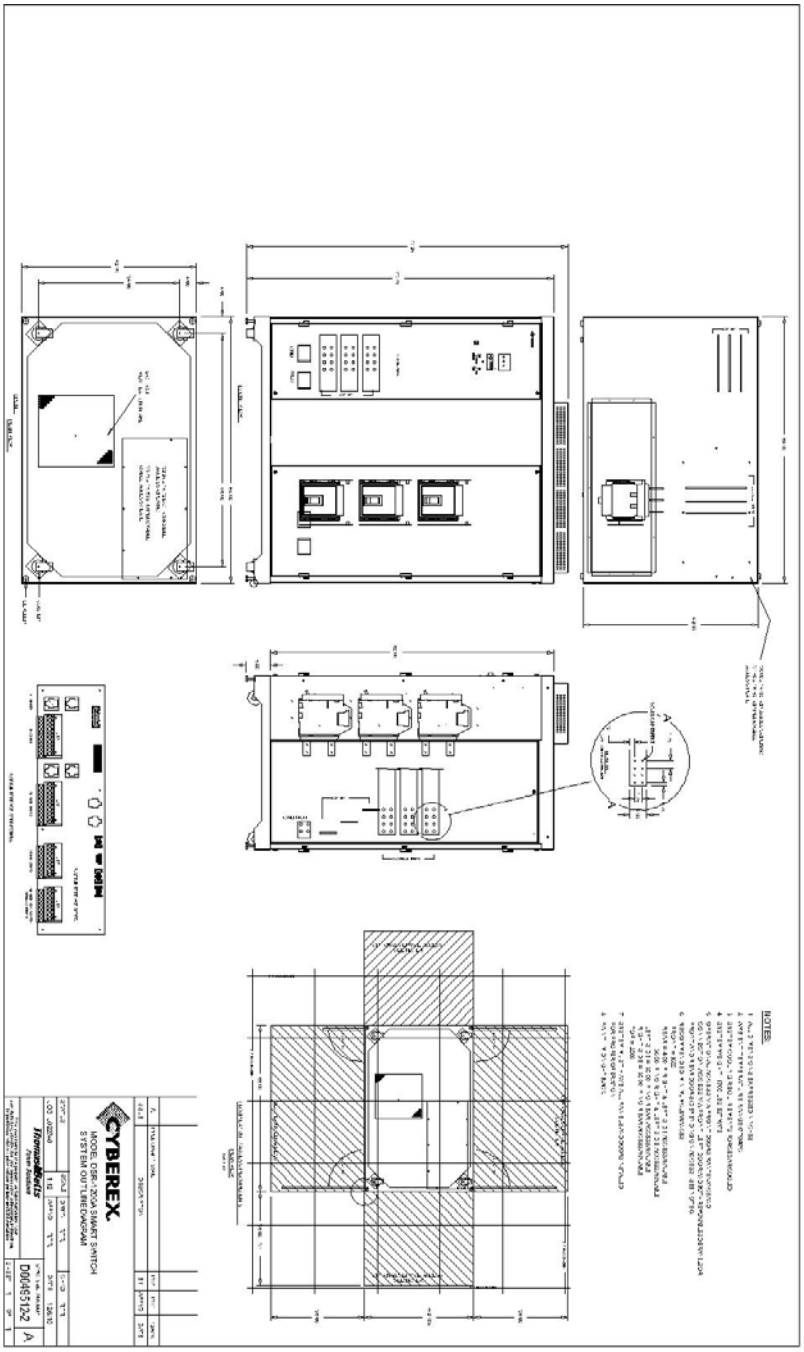
NOTES:
CYBEREX
MODEL DSR-1200A SMART SWITCH
SYSTEM OUTLINE DIAGRAM
D00495142
A

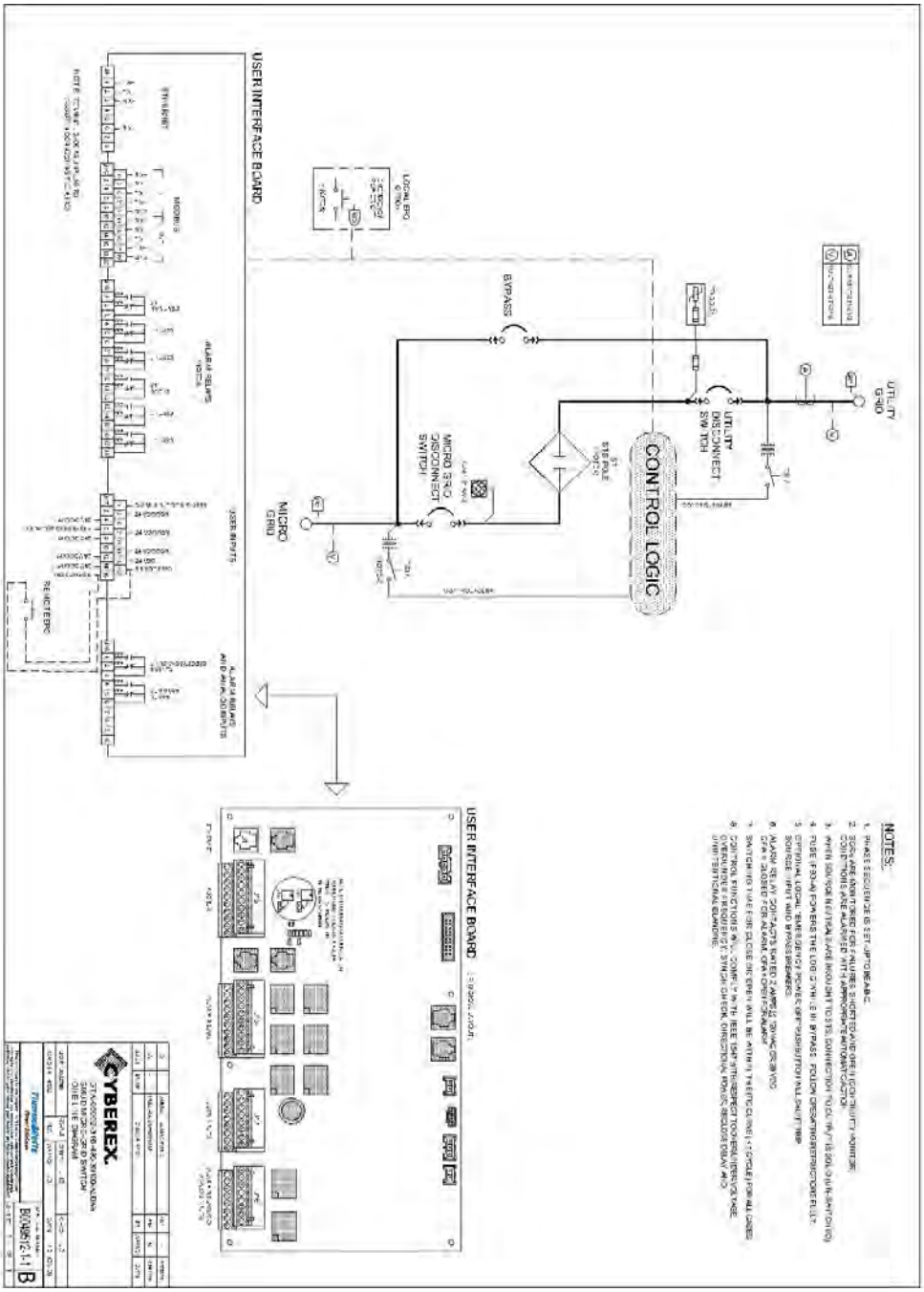
USER INTERFACE BOARD
CONTROL LOGIC
UTILITY GRID
UTILITY DISCONNECT SWITCH
MICRO GRID DISCONNECT SWITCH
MICRO GRID
BYPASS
NOTES:
CYBEREX

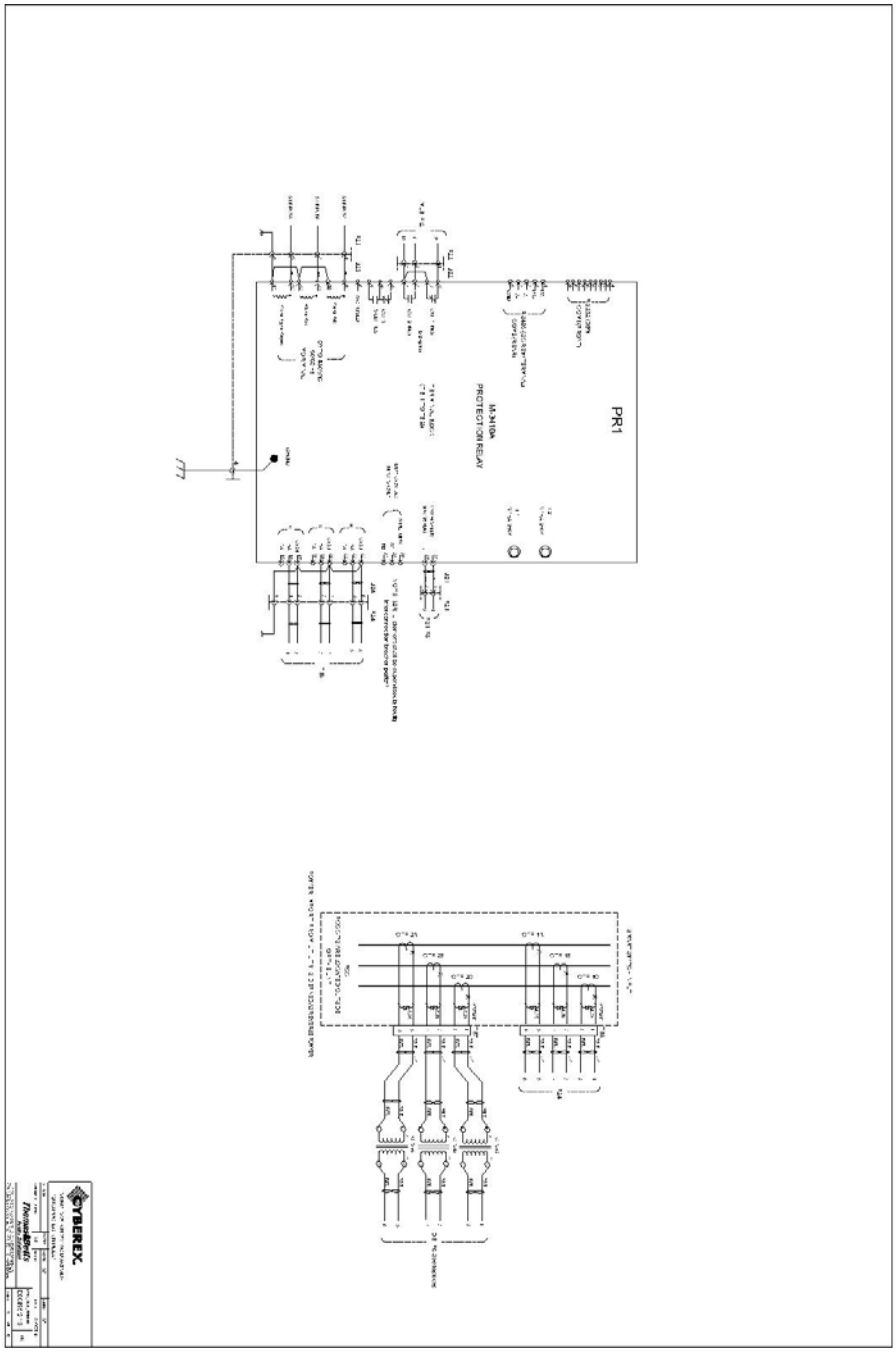
PR1
PROTECTOR RELAY
CYBEREX

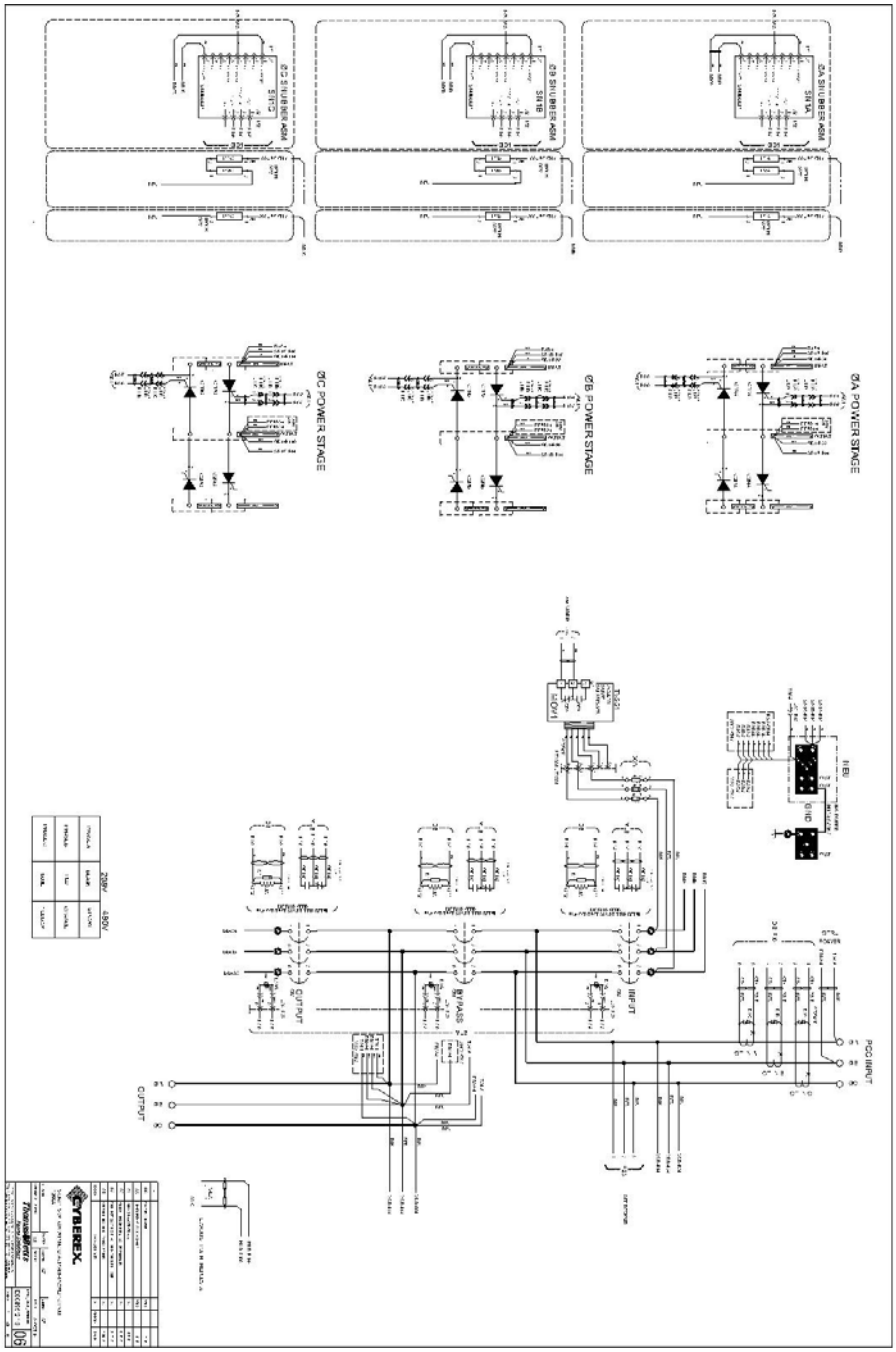
ØA SHUBBER ASM
ØB SHUBBER ASM
ØC SHUBBER ASM
ØA POWER STAGE
ØB POWER STAGE
ØC POWER STAGE
INPUT
BYPASS
OUTPUT
PCC INPUT
CYBEREX

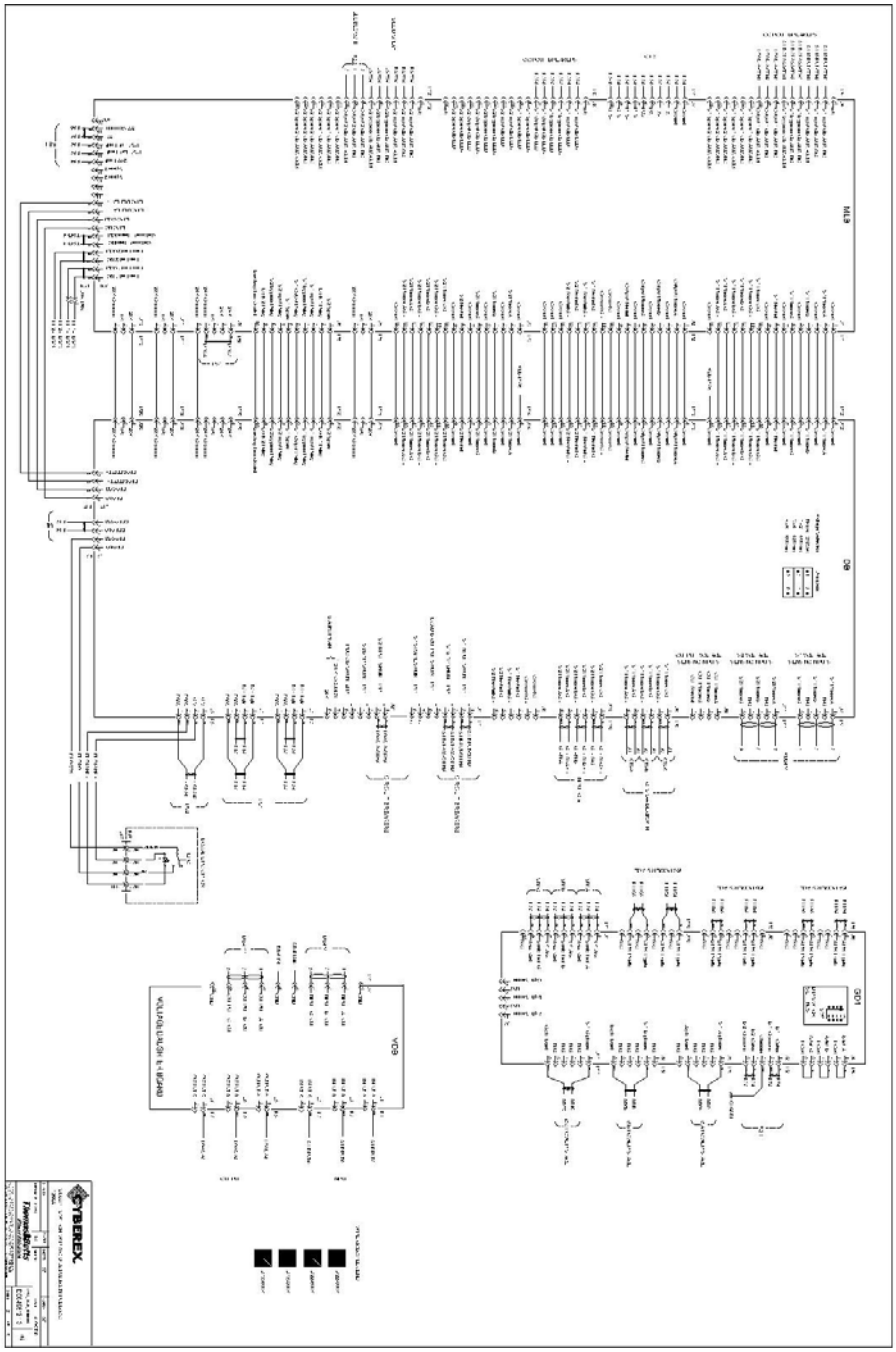

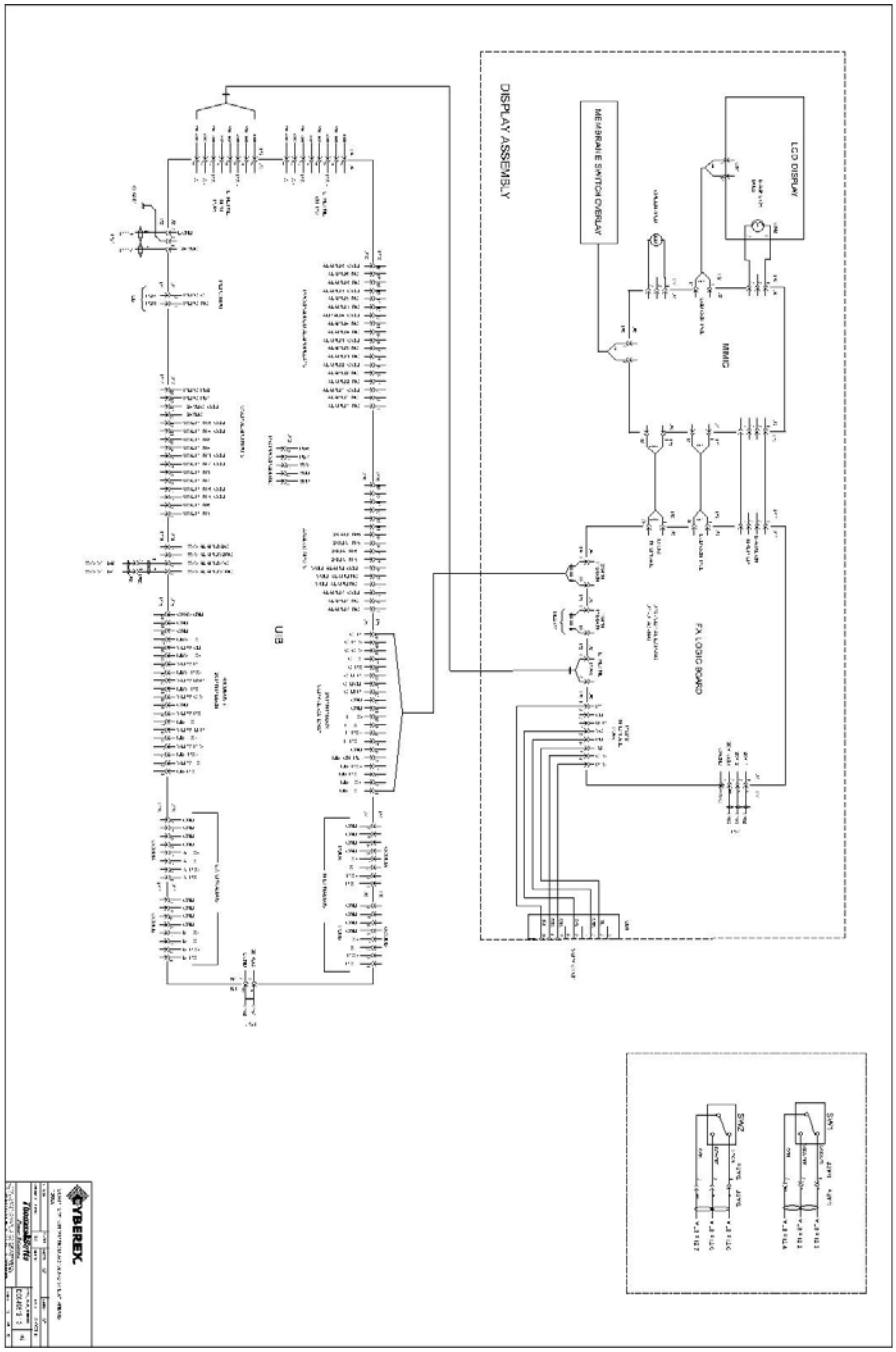
DISPLAY ASSEMBLY
MEMBRANE SWITCH OVERLAY
LCD DISPLAY
MMIC
FA LOGIC BOARD
U1
SW1
SW2
CYBEREX

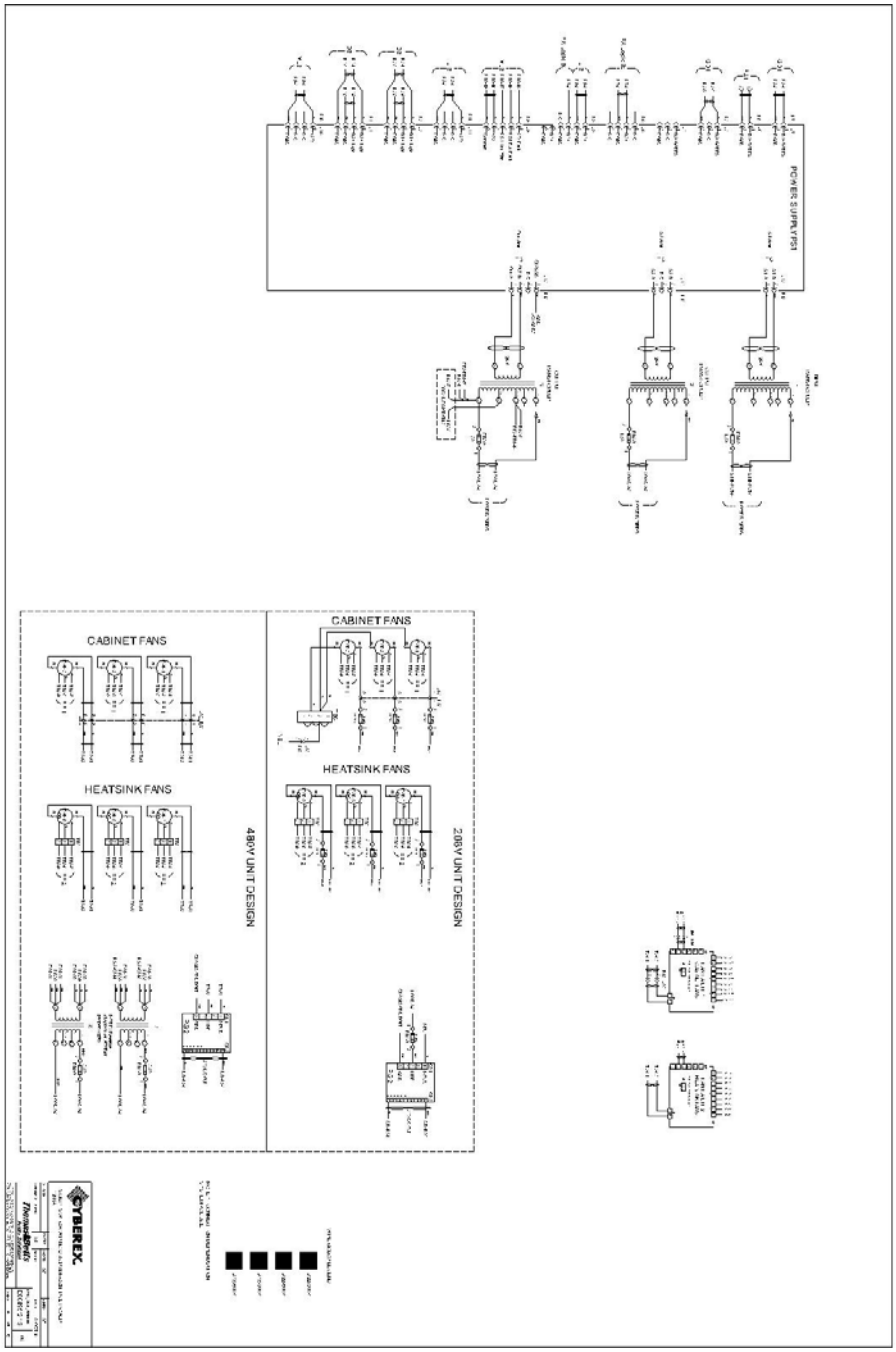
POWER SUPPLY PS1
CABINET FANS
HEATSINK FANS
208V UNIT DESIGN
CABINET FANS
HEATSINK FANS
480V UNIT DESIGN
CYBEREX

APPENDIX B:
Tecogen INV-100 CHP Module Document

Appendix B - Tecogen INV-100 CHP Module Document

TECOGEN®

Engineering Submittal

For Approval

INV-100

InVerdẽ® CHP Module

Sacramento Municipal Utility District (SMUD)
Sacramento, California

Submitted To:

Sacramento Municipal Utility District (SMUD)
6201 "S" Street
P.O. Box 15830
Sacramento, CA 95817

Prepared By:

Tecogen
45 First Avenue
Waltham, MA 02451

Table of Contents

1. Sale Information 3

2. General Specifications 5

3. Installation 6

Drawings

Drawing 1 INV-100 Installation Drawing—View 1 7
Drawing 2 INV-100 Installation Drawing—View 2 7
Drawing 3 INV-100 Installation Drawing—View 3 9
Drawing 4 INV-100 Installation Drawing—View 4 10
Drawing 5 INV-100 Installation Drawing—View 5 11
Drawing 6 INV-100 Installation Drawing—View 6 12
Drawing 7 INV-100 Customer Power Connections 13
Drawing 8 INV-100 Customer Control Interface Wiring 14
Drawing 9 INV-100 Master/Slave Building Power Control 15
Drawing 10 INV-100 Reactance Panel for Multiple Unit Standby 16
Drawing 11 INV-100 Natural Gas Piping 17
Drawing 12 INV-100 Exhaust System Piping 18
Drawing 13 INV-100 Heat Recovery Piping 19
Drawing 14 INV-100 Generator Cooling Loop Piping 20

4. Start-up 21

5. Warranty 22

6. Service Contract 23

7. Prestart Checklist 24

8. Material Delivery 27

9. Summary of Revisions .....

Disclaimer

Neither Tecogen, nor any person acting on its behalf: (a) makes any warranty or representation, express or implied, with respect to the accuracy, completeness, or usefulness of the information contained in this manual or that the use of any information, apparatus, method, or process disclosed in this manual may not infringe privately owned rights; or (b) assumes any liabilities with respect to the use of, or for damage resulting from the use of, any information, apparatus, method, or process disclosed in this manual. Information is subject to change without notice.

1. Sale Information

Sold To:	Sacramento Municipal Utility District (SMUD) 6201 “S” Street P.O. Box 15830 Sacramento, CA 95817
Project:	Sacramento Municipal Utility District (SMUD) 6201 “S” Street P.O. Box 15830 Sacramento, CA 95817
Purchase Order Number:	4500065725
Submittal Date:	August 23, 2010
Sale Number:	656
Engineer:	DE Solutions
Mechanical Contractor:	(TBD)
Tecogen Representative:	Bill Martini, Tecogen, 503-641-1768
Equipment Submitted	Three (3) TECOGEN® INV-100, InVerdẽ® Premium Power CHP Modules
Built-In Options Supplied, each with:	Outdoor Enclosure Option Direct Computer Connection “CERTS” Software Option “Extra-Low” Emission Catalyst (beyond “Level 2” California type) Reactance Panel w/ Disconnect Switch (mounted in weather proof cabinet on the outside of outdoor enclosures) 4” Carbon Steel Hospital Grade Silencers (mounted on top of the outdoor enclosures)
Accessories Supplied:	None
Additional Options:	Engineering and Technical Support during detailed design and engineering. Startup by Tecogen
Standard Warranty:	One Year Parts and Labor Warranty
Additional Warranty:	Service Maintenance Agreement (covers total of 20,000 unit-hours operation @ $2.00/hr per unit, or approx. 6,667 run-hrs/unit).
Shipment Terms:	F.O.B. Factory, First Destination

CHP Modules utilizing induction generators are capable of operating only when excitation power, external to the Module, is provided. In contrast, the **InVerdẽ®** CHP Module utilizes a power generation technology which enables the unit to provide premium power even when disconnected from an external power source. This feature allows end users to power properly interconnected devices during outages for the purpose of convenience only.

WARNING

*The **InVerdẽ®** is not intended to be applied in a Level 1 or Level 2 Emergency Power Supply System as defined by the National Fire Protection Association in Chapter 110. Further, the **InVerdẽ®** has not been tested or approved to this standard.*

*When operating disconnected from the grid, Tecogen defines the **InVerdẽ®** as a convenience or stand-alone power generator which is capable of energizing systems that end users **prefer** to be enabled in the event of a failure of the utility but are not necessary for compliance with local and/or national codes to comply with life-safety requirements. Devices within the facility that require power back-up for the purpose of code compliance, such as those codes related to life safety, require a separate alternative power source from the **InVerdẽ®** system that meets all aspects of the applicable codes. Systems that could cause serious injury or loss of human life if not operable at all times must be energized by alternate sources (Emergency Battery Units or Level 1 Emergency Power Systems).*

*Prior to the installation of the **InVerdẽ®** , the installing contractor, engineer and/or end user should consult local authorities and review the local building codes and this manual in order to properly install the **InVerdẽ®** as a stand-alone generating system."*

2. General Specifications

	INV-100	
	Continuous	*Peaking*[1]
Electrical Output (kW)	100 kW	125 kW
Standalone Electric Capacity[2]	100 kW /125 kVA	
Thermal Output (Btu/hr) **Engine** **Generator/Power Electronics**	700,000 27,000	920,000 34,000
Gas Input	1238 scfh	1625 scfh
Overall Efficiency **@LHV of 905 Btu/scf** **@HHV of 1020 Btu/scf**	92.9% 82.4%	91.5% 81.2%
Required Gas Pressure *(when operating at full load)*	10-28" wc	
Hot Water Flow	30 gpm	
Maximum Leaving Water Temperature	230 °F	
Maximum Entering Water Temperature	180 °F	
Air Emissions[3]**:** * Emissions levels for this project will be lower; see special emissions performance documentation provided separately.	NOx: 1.5 lb/MWh* CO: 2.0 lb/MWh* NMHC: 1.0 lb/MWh*	
Electrical Service	480 V, 3 PH, 4 – wire	
Operation Temperature Range	-4 to 104 °F (-20 °C to 40 °C)	
Storage Temperature Range	-4 to 104 °F (-20 °C to 40 °C)	
Acoustic Level	74 dBa @ 20'	
Dimensions (Indoor Unit)	7' 4" L x 4' W x 5.9" H	
Dimensions (Outdoor Unit)	10' 4" L x 6' 2" W x 7'5" H (8' H with Silencer on top)	
Weight (Indoor Unit)	4,500 lb	
Weight (Outdoor Unit)	5,900 lb	

Safety and Interconnection Compliance

ETL Listed—*Labeled for compliance with UL 1741—Utility Interactive; Inverters, Converters, Controllers and Interconnection System Equipment for Use with Distributed Energy Resources**

** Note: The UL 1741 listing is voided when the unit is operated in CERTS or standby mode.*

Notes
1. Peaking capacity is available for 100 hours per year only when grid connected.
2. Standalone capacity is the lesser of 100 kW or 125 kVA.
3. Lower emissions options are available with the use of additional catalyst material.
4. Above performance data is valid up to 104 °F ambient temperature.
5. All specifications are +/- 5% and are subject to change without notice.
6. The **InVerdē** *is not intended to be applied in a Level 1 or Level 2 Emergency Power Supply System as defined by the National Fire Protection Association in Chapter 110.*

3. Installation

The installation of the INV-100 InVerdẽ® CHP module is not provided by Tecogen, Inc. However, Tecogen has provided the attached Installation Drawings to assist design engineers, performance contractors, or mechanical contractors with this task. It contains the information required to install this equipment including the utility interconnect information, natural gas system, exhaust system, ventilation requirements, control interfaces, and the heat recovery water system. However, it is ultimately this third party's responsibility to identify the design details and specific job requirements to ensure an acceptable installation and one that conforms to local codes.

When piping to TECOGEN®, typical industry standards apply, as well as local building and mechanical codes. Piping should be self-supporting and not limit service access to the unit nor interfere with the opening of control panel doors. Materials should be appropriate for the conditions of use.

Important

Installation of this equipment should be performed only by personnel qualified in the areas of electrical wiring, mechanical and hydronic system piping, natural gas plumbing, hot exhaust piping, and ventilation.

All piping and wiring should conform to local and national codes.

The Installation Drawings presented in this submittal are as follows:

Drawing 1 INV-100 Installation Drawing—View 1 (with Outdoor Enclosure Option)

Drawing 2 INV-100 Installation Drawing—View 2 (with Outdoor Enclosure Option)

Drawing 3 INV-100 Installation Drawing—View 3 (with Outdoor Enclosure Option)

Drawing 4 INV-100 Installation Drawing—View 4 (with Outdoor Enclosure Option)

Drawing 5 INV-100 Installation Drawing—View 5 (with Outdoor Enclosure Option)

Drawing 6 INV-100 Installation Drawing—View 6 (with Outdoor Enclosure Option)

Drawing 7 INV-100 Customer Power Connections

Drawing 8 INV-100 Customer Control Interface Wiring

Drawing 9 INV-100 Master/Slave Building Power Control Wiring

Drawing 10 INV-100 Utility Interface and Protection Schematic

Drawing 11 INV-100 Natural Gas Piping ((with Outdoor Enclosure Option)

Drawing 12 INV-100 Exhaust System Piping

Drawing 13 INV-100 Heat Recovery Piping

Drawing 14 INV-100 Generator Cooling Loop Piping

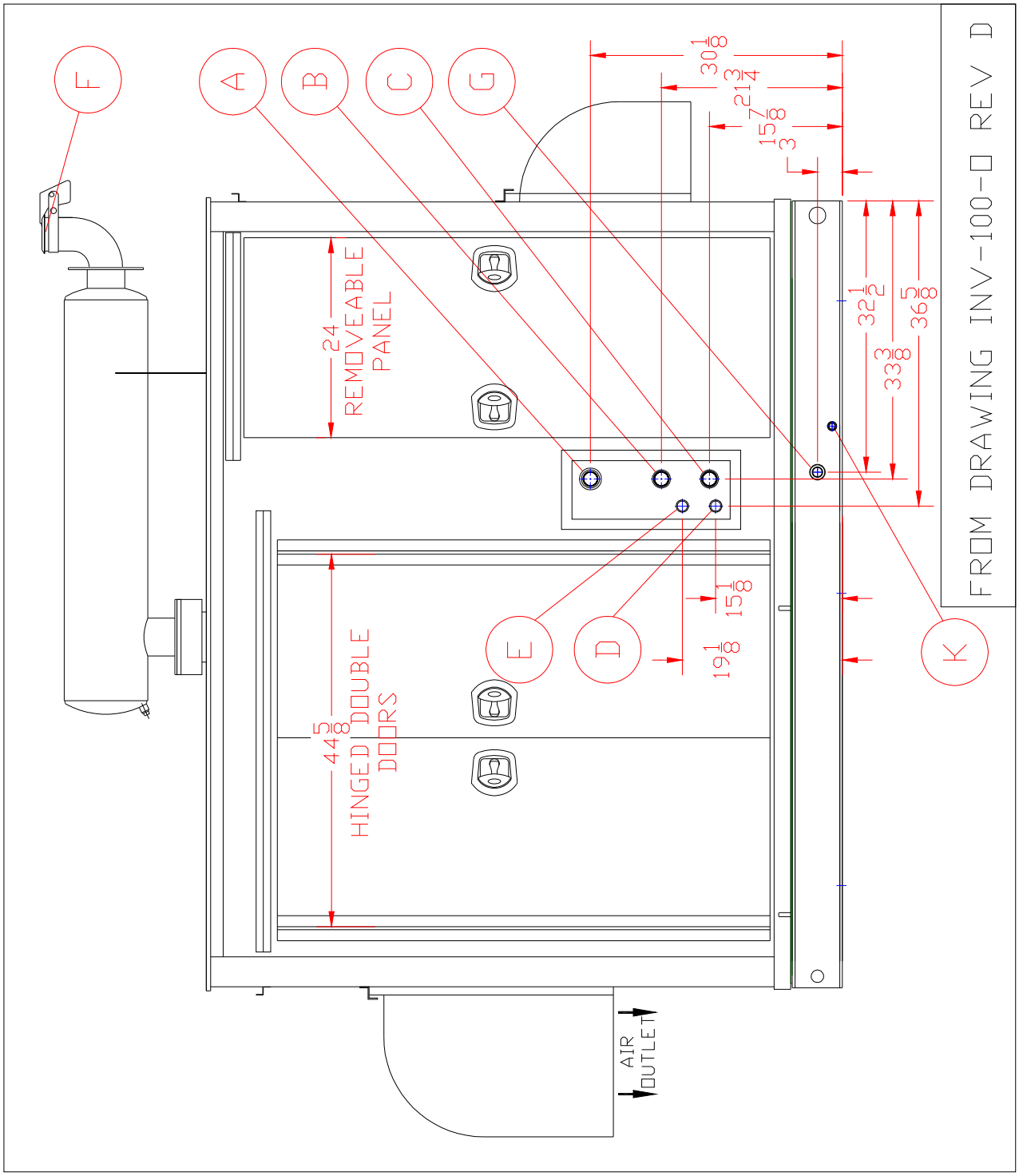

Drawing 1 INV-100 Installation Drawing—View 1
(special drawing, showing unit with Outdoor Enclosure Option)

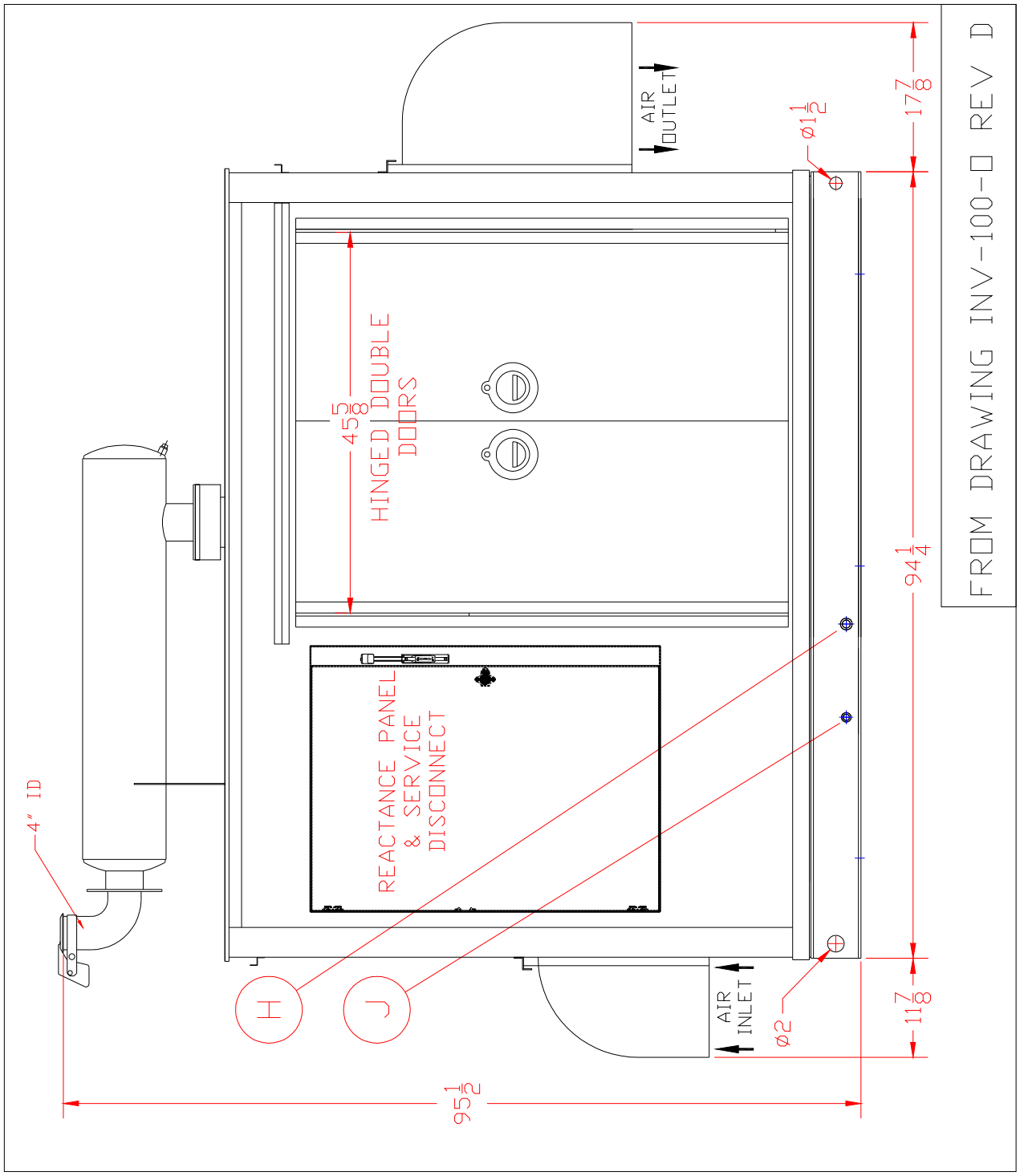

Drawing 2 INV-100 Installation Drawing—View 2
(special drawing, showing unit with Outdoor Enclosure Option)

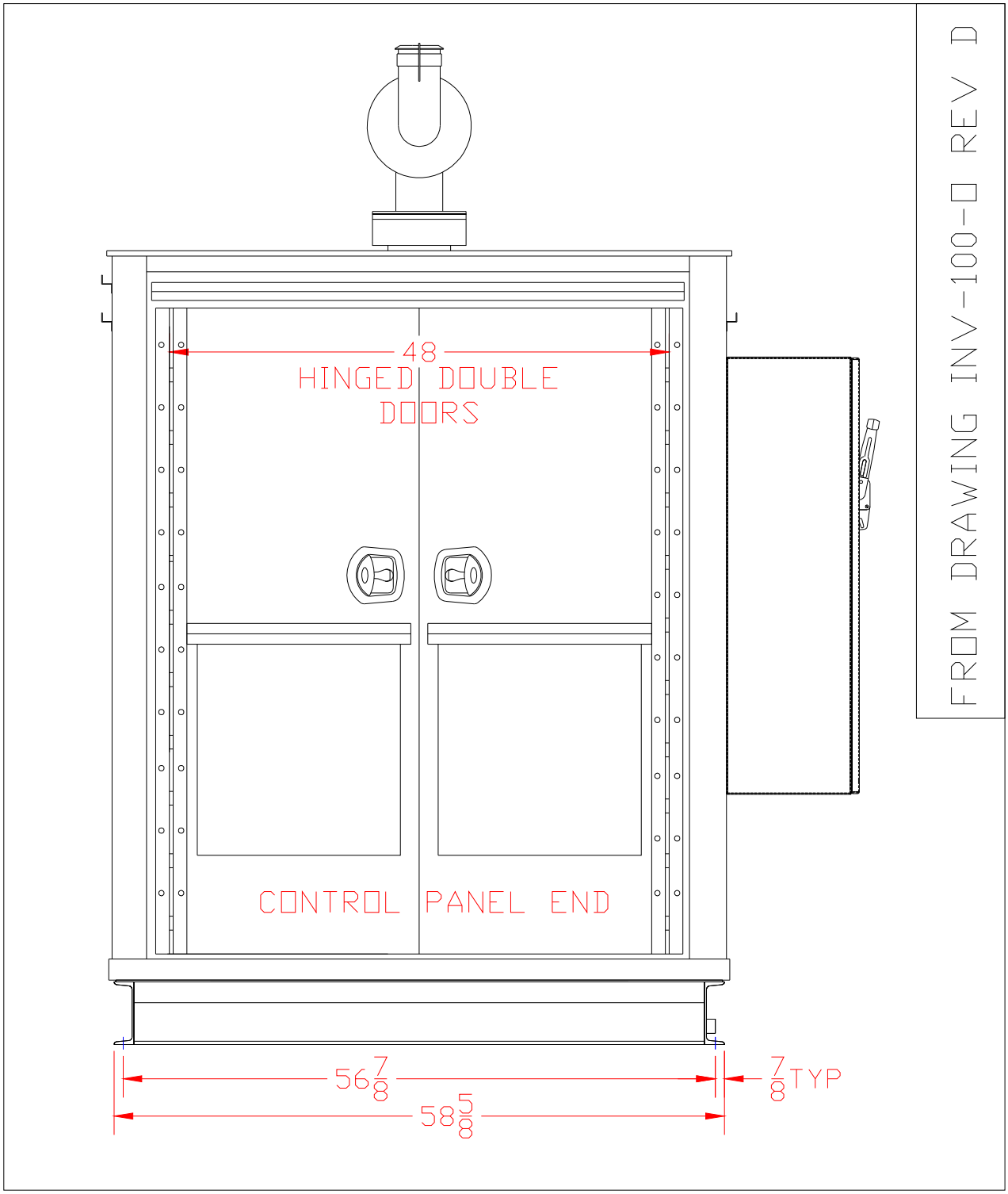

Drawing 3 INV-100 Installation Drawing—View 3

(special drawing, showing unit with Outdoor Enclosure Option)

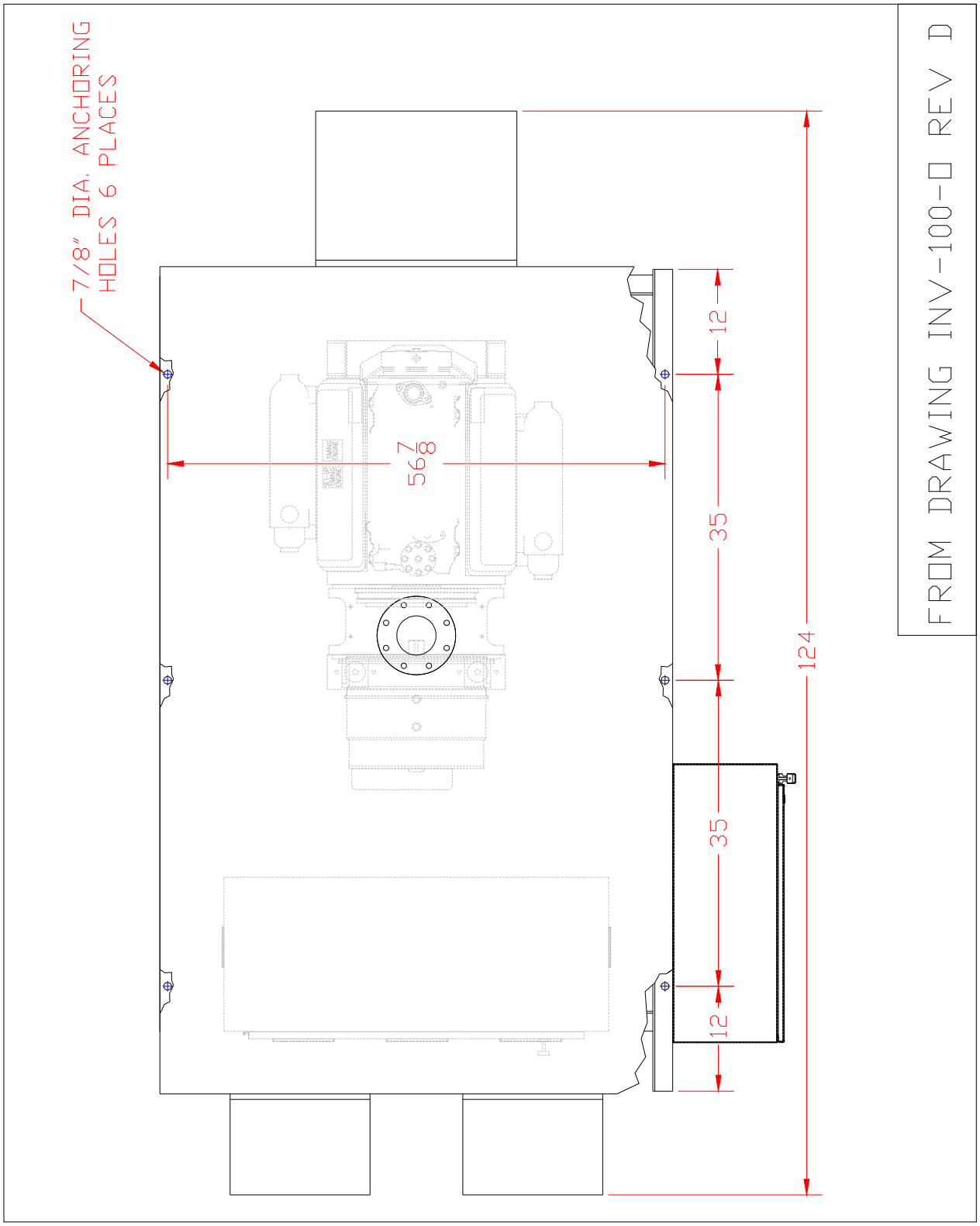

Drawing 4 INV-100 Installation Drawing—View 4
(special drawing, showing unit with Outdoor Enclosure Option)

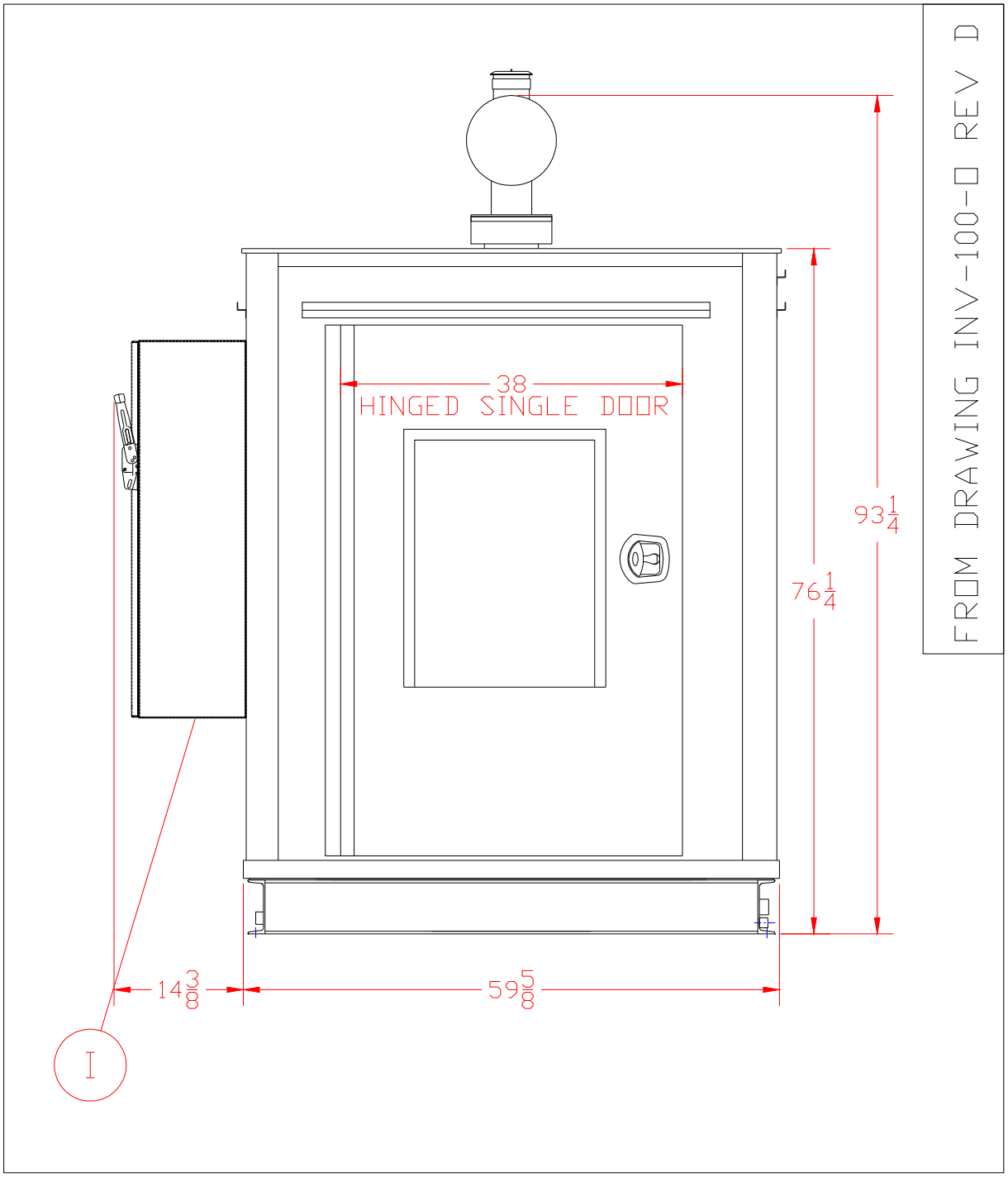

Drawing 5 INV-100 Installation Drawing—View 5

(special drawing, showing unit with Outdoor Enclosure Option)

CONNECTION TABLE			
CONN.	DESCRIPTION	SIZE	TYPE
A	GAS INLET	1 1/2"	FPT
B	HOT WATER OUT	1 1/2"	FPT
C	HOT WATER IN	1 1/2"	FPT
D	GENERATOR/POWER ELECTRONICS COOLING WATER IN	3/4"	FPT
E	GENERATOR/POWER ELECTRONICS COOLING WATER IN	3/4"	FPT
F	ENGINE EXHAUST OUTLET	4" ID	–
G	ENGINE COOLANT RELIEF VALVE DRAIN	1"	FPT
H	ENGINE OIL RESERVOIR DRAIN	3/4"	FPT
I	ELECTRICAL POWER (480V 3 PHASE)	2"	CONDUIT
J	ENGINE COOLANT SYSTEM DRAIN	1/2"	FPT
K	COOLANT PUMP DRIP PAN DRAIN	1/2"	FPT

NOTES:

1. APPROXIMATE RIGGING WEIGHT IS 5900 lbs.
2. ALLOW 4' CLEARANCE ALL AROUND UNIT FOR ROUTINE MAINTENANCE AND DOOR SWING. ALL CLEARANCES SHOULD COMPLY WITH LOCAL AND NATIONAL CODES.
3. A CONCRETE HOUSEKEEPING PAD IS RECOMMENDED: APPROX. 6" X 5' X 8'.

FROM DRAWING INV-100-0 REV D

Drawing 6 INV-100 Installation Drawing—View 6

(special drawing, showing unit with Outdoor Enclosure Option)

REV	DESCRIPTION	DATE	BY	APPR
A	RELEASED FOR PUBLICATION	10-22-08	J.F.	
B	REVISED NOTE 2	12-18-08	J.R.	
C	CORRECTED CONDUIT SIZE	09-08-09	J.R.	

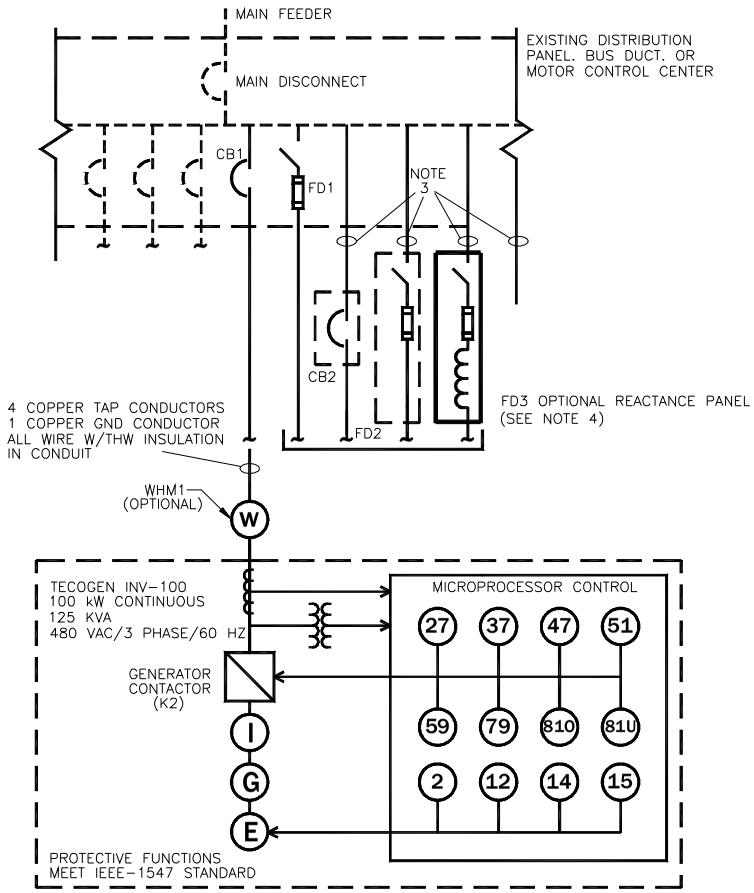

NOTES:

1. INSTALLATION AND WIRING METHODS SHALL BE IN ACCORDANCE WITH NEC, ANSI/NFPA 70, AND LOCAL CODES AND REGULATIONS. LOCAL ELECTRIC UTILITY APPROVAL IS REQUIRED BEFORE PARALLEL GENERATION.
2. OUTPUT NEUTRAL IS NOT BONDED TO GROUND. SYSTEM GROUNDING IS THE RESPONSIBILITY OF THE INSTALLER AND SHALL CONFORM WITH NEC ARTICLE 705 AND NFPA 70.
3. EACH INV-100 MODULE REQUIRES EITHER AN EXTERNAL CIRCUIT BREAKER OR FUSED DISCONNECT THAT EITHER FITS INTO EXISTING DISTRIBUTION PANEL, BUS DUCT, OR MOTOR CONTROL CENTER (CB1 OR FD1), IF SPACE IS AVAILABLE, OR BE FREE-STANDING (CB2 OR FD2).
4. IF DISCONNECT DEVICE IS LOCATED IN A SEPARATE PANEL, IT MUST BE INTERCONNECTED TO THE EXISTING DISTRIBUTION PANEL SO THAT IT IS ISOLATED WHEN THE MAIN DISCONNECT IS OPEN. ALSO, THIS SEPARATE PANEL SHOULD BE LOCATED WITHIN 10 FEET OF THE EXISTING DISTRIBUTION PANEL. HOWEVER, IT MAY BE LOCATED UP TO 25 FEET AWAY FROM THE EXISTING DISTRIBUTION PANEL IF THE COGENERATION MODULE'S AMPACITY IS AT LEAST 1/3 OF THE MAIN FEEDER'S AMPACITY.
5. FOR MULTIPLE UNITS RUNNING IN STAND-ALONE MODE, TECOGEN WILL SUPPLY A DISCONNECT PACKAGED WITH LINE REACTORS AS AN OPTION (FD3). REACTANCE PANEL SHOULD BE WITHIN 25 FEET OF INV-100 UNIT. THESE PANELS ARE NOT REQUIRED FOR SINGLE UNIT INSTALLATIONS OR IN MULTIPLE UNIT INSTALLATIONS WHERE STAND-ALONE MODE IS NOT REQUIRED.

Cogeneration Module Power Connection Specifications

SYSTEM VOLTAGE	FLA[1]	MCA (FLA x 1.25)[2]	TAP SIZE AWG [3]	GROUND SIZE AWG[4]	CONDUIT DIAMETER (in)	FUSE SIZE[5]
480 V	150	188	3/0	6	2.0	175

1. AT 125 kVA RATING.
2. FOR CONTINUOUS DUTY WIRE SIZING.
3. USE EQUIPMENT WITH LUGS RATED FOR 75°C. USE THW INSULATION OR EQUIVALENT. REFERENCE: NEC ARTICLE 310.
4. REFERENCE NEC ARTICLE 250.
5. CURRENT LIMITING, 200,000 AMP INTERRUPT CAPACITY FUSES. REFERENCE: NEC ARTICLE 430.

LEGEND

CB1	CIRCUIT BREAKER TO FIT EXISTING DISTRIBUTION PANEL, BUS DUCT, OR MOTOR CONTROL CENTER.
CB2	CIRCUIT BREAKER IN SEPARATE ENCLOSURE.
FD1	FUSED DISCONNECT TO FIT EXISTING DISTRIBUTION PANEL, BUS DUCT, OR MOTOR CONTROL CENTER.
FD2	FUSED DISCONNECT IN SEPARATE ENCLOSURE.
FD3	REACTANCE PANEL WITH FUSED DISCONNECT. (REQUIRED FOR MULTIPLE UNITS IN STAND-ALONE MODE)
WHM1	WATTHOUR METER IN SOCKET
I	INVERTER
G	GENERATOR
E	ENGINE

TECOGEN

45 First Avenue Waltham,MA 02451

DRAWN	DATE	ENGINEER
Joe Gehrel	10/20/08	

TITLE: TECOGEN INV-100 CUSTOMER POWER CONNECTIONS

SIZE	DRAWING NUMBER	SHEET	REV	CAD NUMBER
B	INV-100-07	1/1	C	INV-100-07

PRODUCTION PART NUMBER:

Drawing 7 INV-100 Customer Power Connections

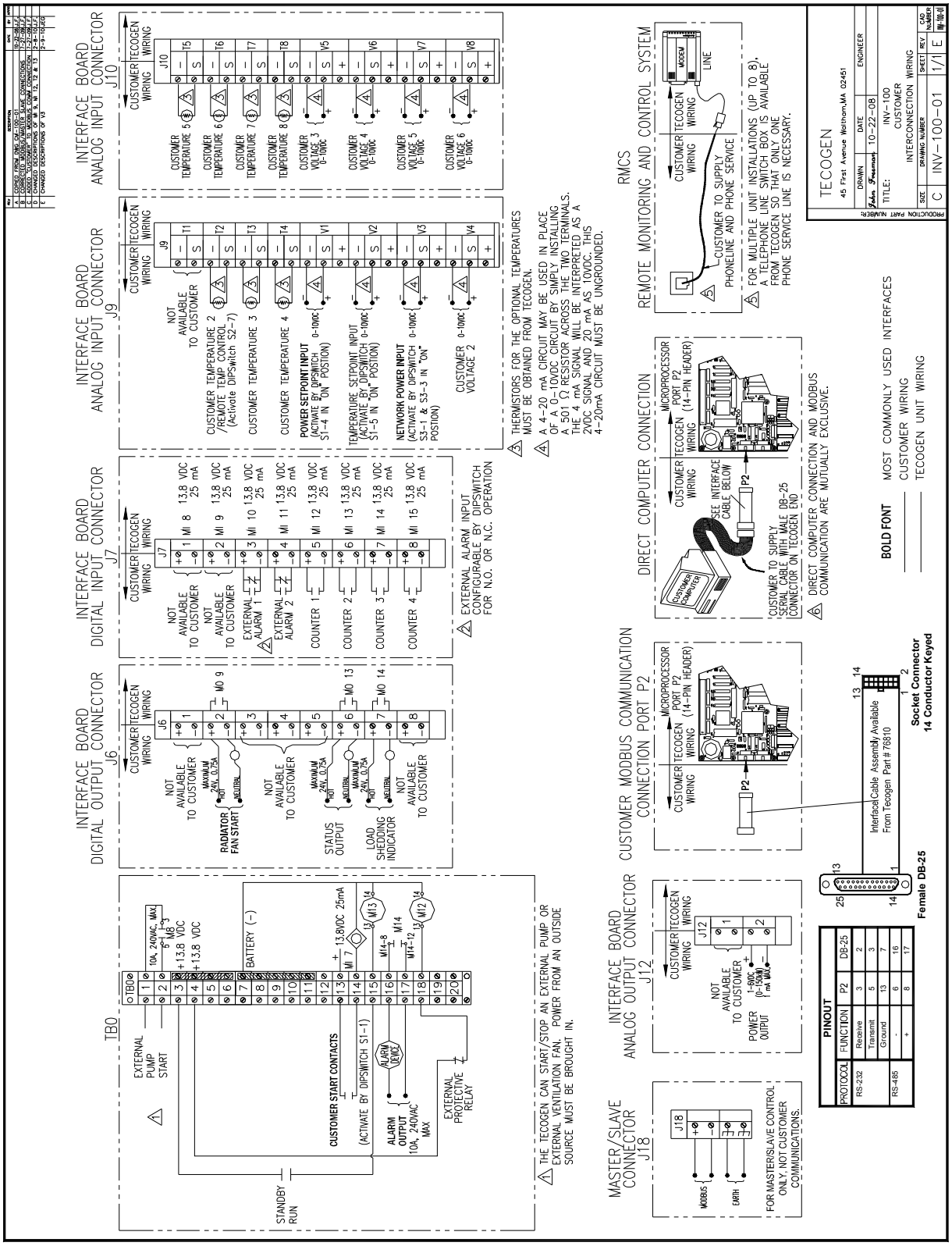

Drawing 8 INV-100 Customer Control Interface Wiring

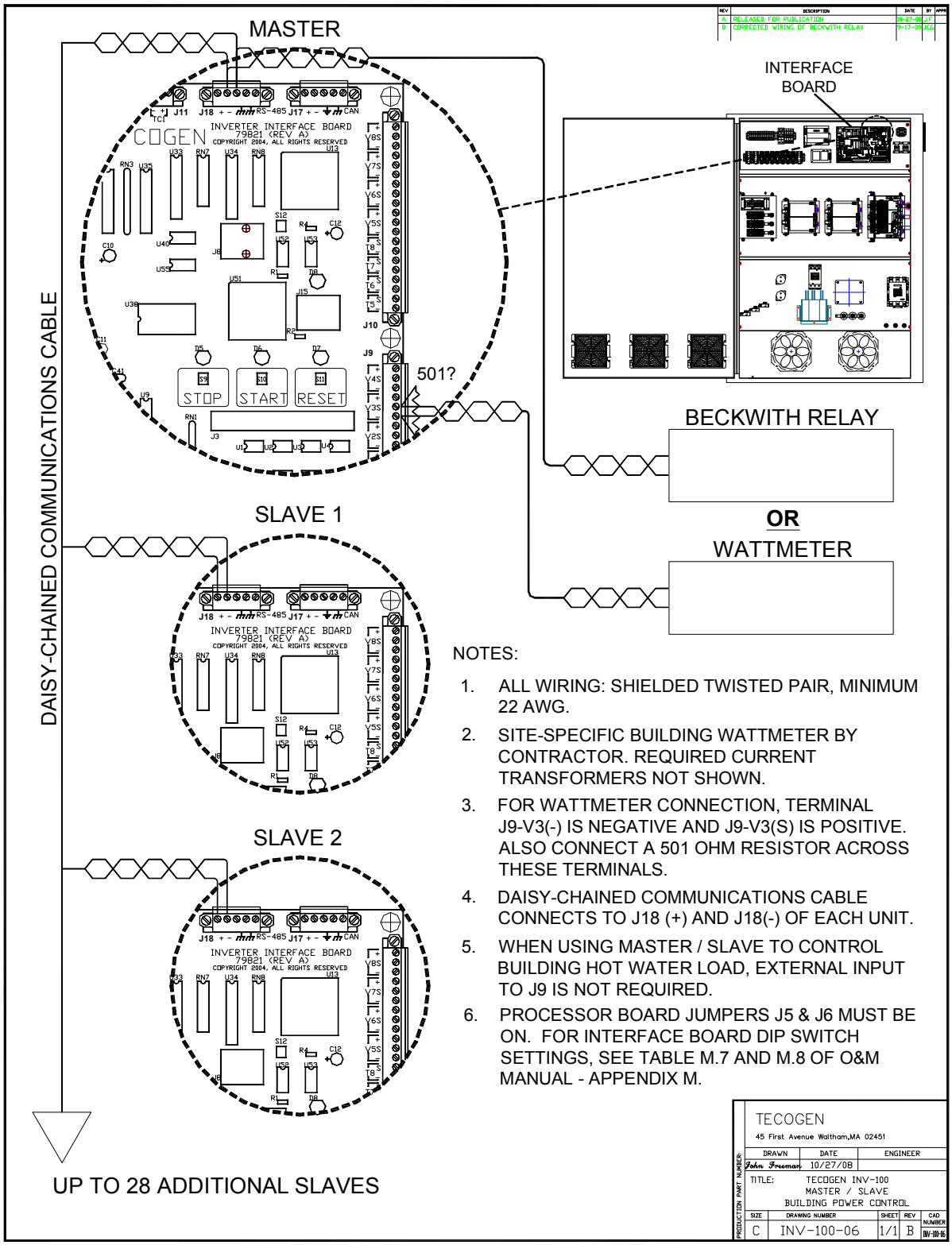

NOTES:

1. ALL WIRING: SHIELDED TWISTED PAIR, MINIMUM 22 AWG.
2. SITE-SPECIFIC BUILDING WATTMETER BY CONTRACTOR. REQUIRED CURRENT TRANSFORMERS NOT SHOWN.
3. FOR WATTMETER CONNECTION, TERMINAL J9-V3(-) IS NEGATIVE AND J9-V3(S) IS POSITIVE. ALSO CONNECT A 501 OHM RESISTOR ACROSS THESE TERMINALS.
4. DAISY-CHAINED COMMUNICATIONS CABLE CONNECTS TO J18 (+) AND J18(-) OF EACH UNIT.
5. WHEN USING MASTER / SLAVE TO CONTROL BUILDING HOT WATER LOAD, EXTERNAL INPUT TO J9 IS NOT REQUIRED.
6. PROCESSOR BOARD JUMPERS J5 & J6 MUST BE ON. FOR INTERFACE BOARD DIP SWITCH SETTINGS, SEE TABLE M.7 AND M.8 OF O&M MANUAL - APPENDIX M.

Drawing 9 INV-100 Master/Slave Building Power Control Wiring

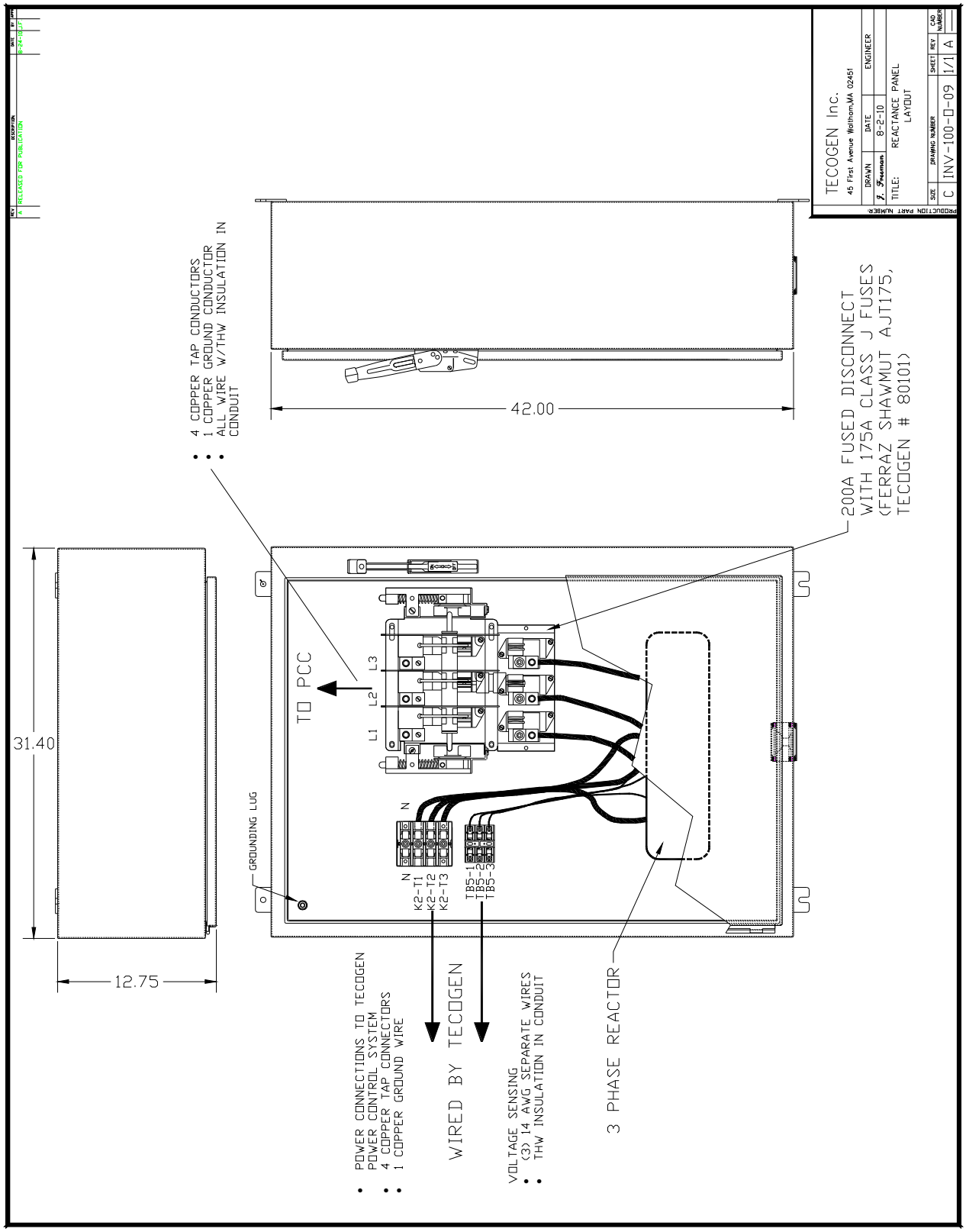

Drawing 10 INV-100 Reactance Panel for Multiple Unit Standby Operation

(special drawing, showing unit with Outdoor Enclosure Option)

REV	DESCRIPTION	DATE	BY	APPR
A	RELEASED FOR PUBLICATION	8-20-10	J.F.	

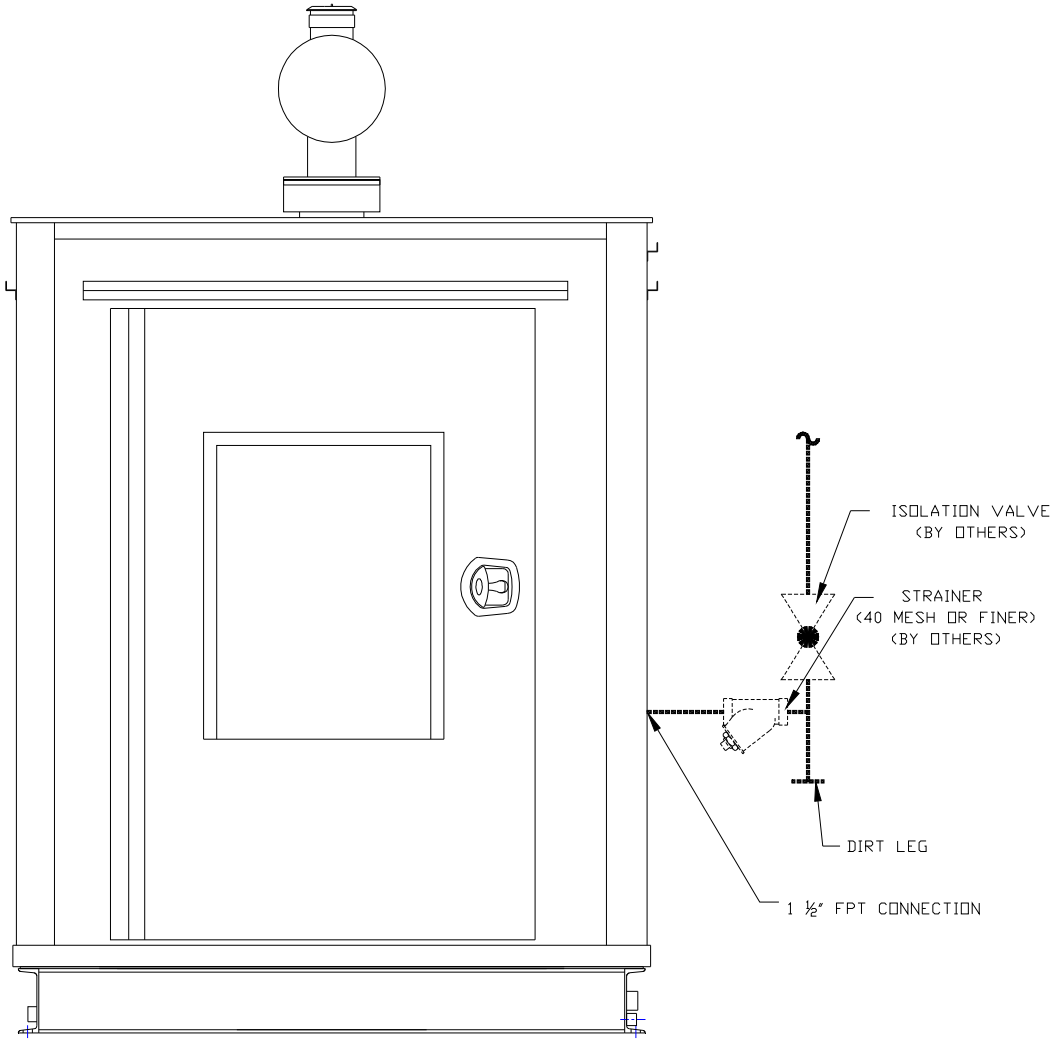

NOTES:

1. GAS SUPPLY PRESSURE (WHEN OPERATING AT FULL LOAD): 13-28"W.C.
2. IF BUILDING GAS PRESSURE EXCEEDS 28". THE CUSTOMER IS REQUIRED TO INSTALL ANOTHER REGULATOR UPSTREAM OF THE TECOGEN UNIT. THIS REGULATOR SHOULD BE A "DEAD-END LOCK-UP" TYPE TO MAINTAIN OUTLET PRESSURE SLIGHTLY ABOVE ADJUSTED PRESSURE WHEN NO GAS IS FLOWING. THIS PREVENTS THE OUTLET PRESSURE FROM EQUALIZING TO LINE PRESSURE, THEREBY PROTECTING THE DOWNSTREAM EQUIPMENT.
3. SELECT APPROPRIATE PIPE SIZE TO ENSURE ADEQUATE GAS PRESSURE FOR FULL LOAD CONDITIONS.

GAS PIPING SIZING (CFH).

EQUIVALENT LENGTH	BLACK IRON PIPE SIZE (inches)			
(feet)	1-1/2	2	2-1/2	3
10	1600	3050	4800	8500
20	1100	2100	3300	5900
40	760	1450	2300	4100
60	-	1150	1850	3250
80	-	990	1600	2800
100	-	870	1400	2500
200	-	-	980	1700

0.3 IN. W.C. PRESSURE DROP.
0.60 SPECIFIC GRAVITY.

4. FUEL PIPING SHOULD BE "BLACK IRON" (not steel coated). FITTINGS SHOULD BE MALLEABLE IRON FOR WELDING.
5. GAS PLUMBING SHOULD NOT INHIBIT ANY COMPONENT WHICH MAY REQUIRE SERVICE OR ACCESS.
6. GAS PLUMBING SHALL CONFORM TO NATIONAL FUEL GAS CODE (NFPA 54) AND/OR LOCAL CODES. ALL PLUMBING COMPONENTS MUST BE SUITED FOR NATURAL GAS. PLUMBING SHOULD BE PERFORMED BY LICENSED PLUMBER IN STATE OF INSTALLATION.

FIELD PIPING

TECOGEN
45 First Avenue Waltham,MA 02451

DRAWN	DATE	ENGINEER
John Freeman	8/20/10	

TITLE: TECOGEN INV-100 OUTDOOR FUEL PIPING RECOMMENDATIONS

PRODUCTION PART NUMBER:

SIZE	DRAWING NUMBER	SHEET	REV	CAD NUMBER
B	INV-100-0-04	1/1	A	INV-100-04

Drawing 11 INV-100 Natural Gas Piping

(special drawing, showing unit with Outdoor Enclosure Option)

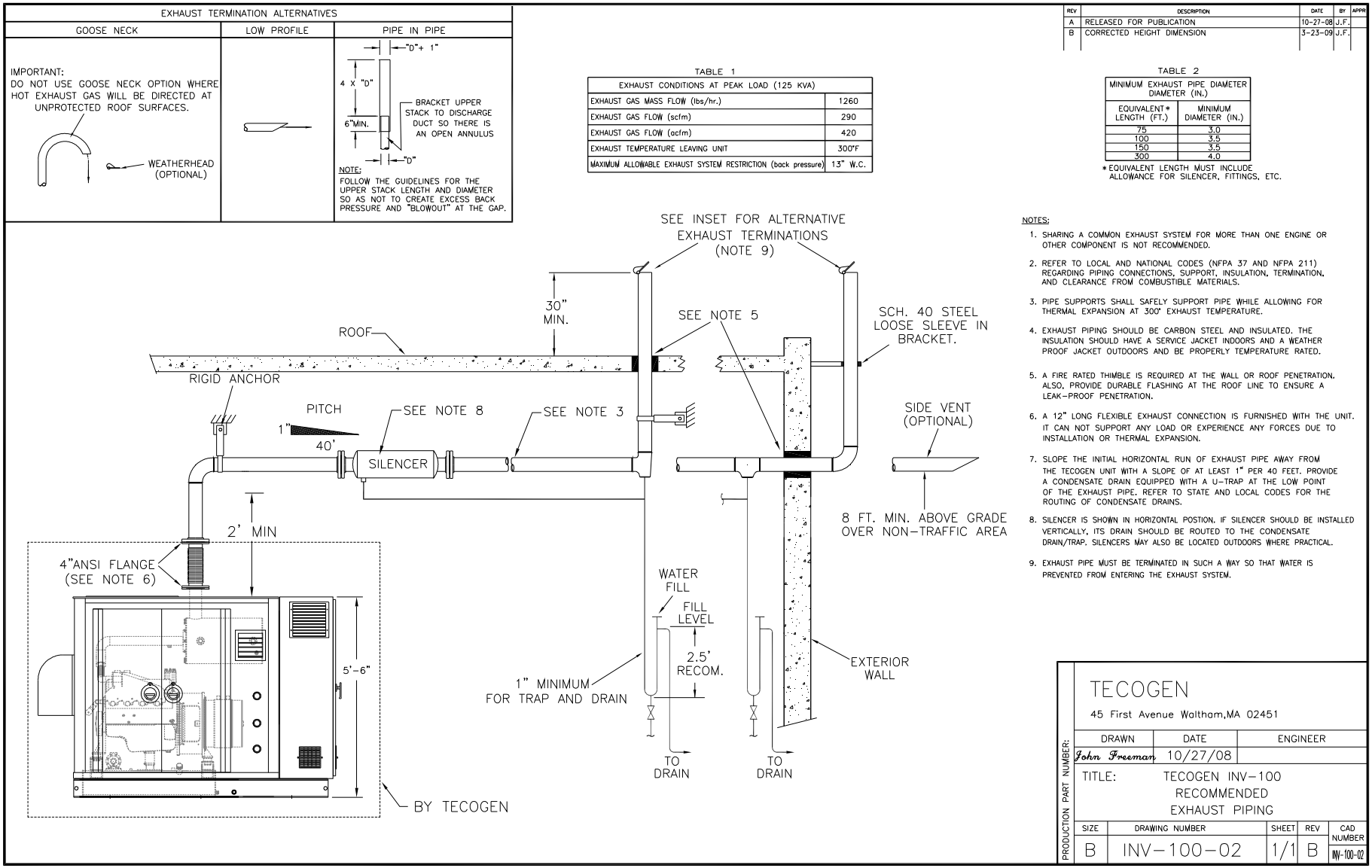

REV	DESCRIPTION	DATE	BY	APPR
A	RELEASED FOR PUBLICATION	10-27-08	J.F.	
B	CORRECTED HEIGHT DIMENSION	3-23-09	J.F.	

TABLE 1

EXHAUST CONDITIONS AT PEAK LOAD (125 KVA)	
EXHAUST GAS MASS FLOW (lbs/hr.)	1260
EXHAUST GAS FLOW (scfm)	290
EXHAUST GAS FLOW (acfm)	420
EXHAUST TEMPERATURE LEAVING UNIT	300°F
MAXIMUM ALLOWABLE EXHAUST SYSTEM RESTRICTION (back pressure)	13" W.C.

TABLE 2

MINIMUM EXHAUST PIPE DIAMETER DIAMETER (IN.)	
EQUIVALENT* LENGTH (FT.)	MINIMUM DIAMETER (IN.)
75	3.0
100	3.5
150	3.5
300	4.0

*EQUIVALENT LENGTH MUST INCLUDE ALLOWANCE FOR SILENCER, FITTINGS, ETC.

NOTES:

1. SHARING A COMMON EXHAUST SYSTEM FOR MORE THAN ONE ENGINE OR OTHER COMPONENT IS NOT RECOMMENDED.
2. REFER TO LOCAL AND NATIONAL CODES (NFPA 37 AND NFPA 211) REGARDING PIPING CONNECTIONS, SUPPORT, INSULATION, TERMINATION, AND CLEARANCE FROM COMBUSTIBLE MATERIALS.
3. PIPE SUPPORTS SHALL SAFELY SUPPORT PIPE WHILE ALLOWING FOR THERMAL EXPANSION AT 300° EXHAUST TEMPERATURE.
4. EXHAUST PIPING SHOULD BE CARBON STEEL AND INSULATED. THE INSULATION SHOULD HAVE A SERVICE JACKET INDOORS AND A WEATHER PROOF JACKET OUTDOORS AND BE PROPERLY TEMPERATURE RATED.
5. A FIRE RATED THIMBLE IS REQUIRED AT THE WALL OR ROOF PENETRATION. ALSO, PROVIDE DURABLE FLASHING AT THE ROOF LINE TO ENSURE A LEAK-PROOF PENETRATION.
6. A 12" LONG FLEXIBLE EXHAUST CONNECTION IS FURNISHED WITH THE UNIT. IT CAN NOT SUPPORT ANY LOAD OR EXPERIENCE ANY FORCES DUE TO INSTALLATION OR THERMAL EXPANSION.
7. SLOPE THE INITIAL HORIZONTAL RUN OF EXHAUST PIPE AWAY FROM THE TECOGEN UNIT WITH A SLOPE OF AT LEAST 1" PER 40 FEET. PROVIDE A CONDENSATE DRAIN EQUIPPED WITH A U-TRAP AT THE LOW POINT OF THE EXHAUST PIPE. REFER TO STATE AND LOCAL CODES FOR THE ROUTING OF CONDENSATE DRAINS.
8. SILENCER IS SHOWN IN HORIZONTAL POSTION. IF SILENCER SHOULD BE INSTALLED VERTICALLY, ITS DRAIN SHOULD BE ROUTED TO THE CONDENSATE DRAIN/TRAP. SILENCERS MAY ALSO BE LOCATED OUTDOORS WHERE PRACTICAL.
9. EXHAUST PIPE MUST BE TERMINATED IN SUCH A WAY SO THAT WATER IS PREVENTED FROM ENTERING THE EXHAUST SYSTEM.

TECOGEN

45 First Avenue Waltham,MA 02451

DRAWN	DATE	ENGINEER
John Freeman	10/27/08	

TITLE: TECOGEN INV-100 RECOMMENDED EXHAUST PIPING

PRODUCTION PART NUMBER:

SIZE	DRAWING NUMBER	SHEET	REV	CAD NUMBER
B	INV-100-02	1/1	B	INV-100-02

Drawing 12 INV-100 Exhaust System Piping

(this drawing shows unit with standard INDOOR enclosure, not applicable to this project)

REV	DESCRIPTION	DATE	BY	APPD
A	RELEASED FOR PUBLICATION	10-20-08	J.F.	
B	ADDED TABLE & BOLD NOTES	3-17-09	J.F.	
C	ADDED NOTE 9	3-10-10	JEG	

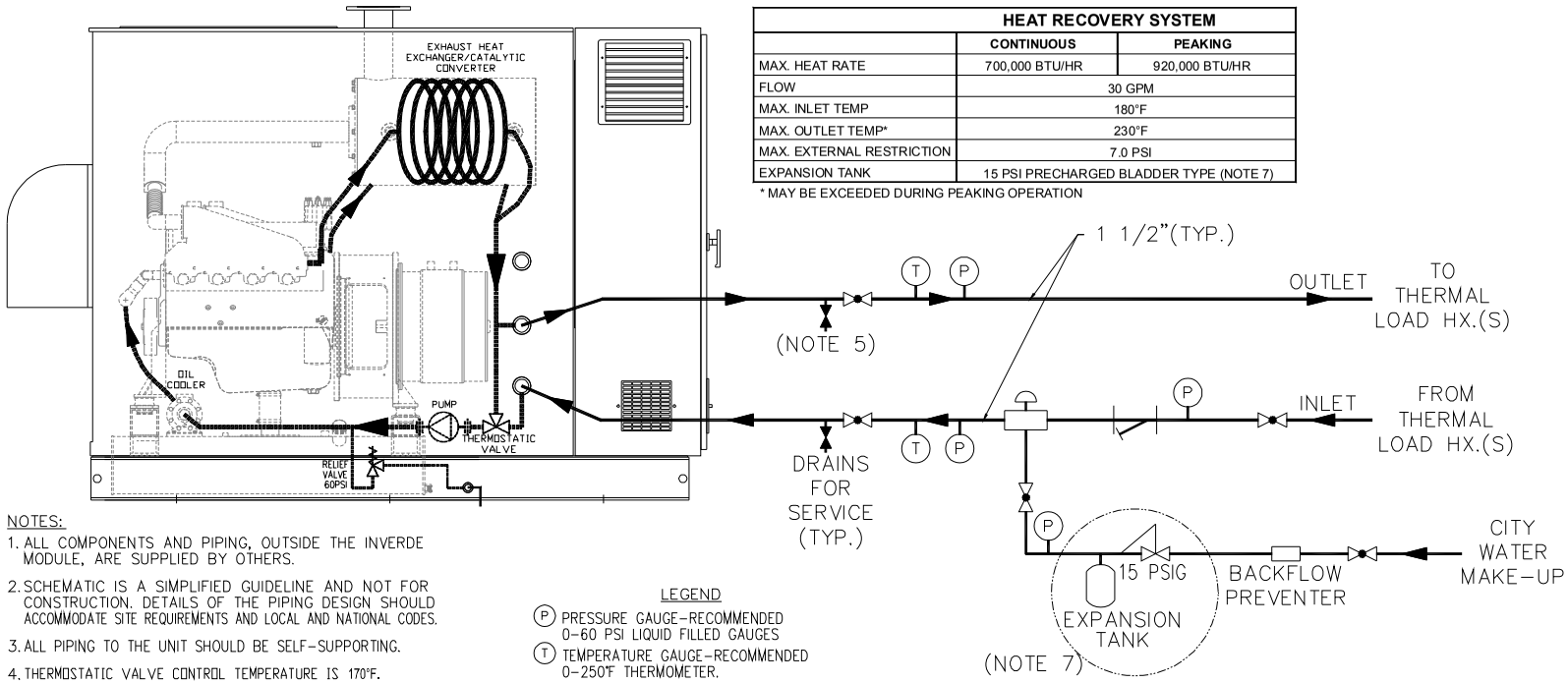

HEAT RECOVERY SYSTEM		
	CONTINUOUS	PEAKING
MAX. HEAT RATE	700,000 BTU/HR	920,000 BTU/HR
FLOW	30 GPM	
MAX. INLET TEMP	180°F	
MAX. OUTLET TEMP*	230°F	
MAX. EXTERNAL RESTRICTION	7.0 PSI	
EXPANSION TANK	15 PSI PRECHARGED BLADDER TYPE (NOTE 7)	

* MAY BE EXCEEDED DURING PEAKING OPERATION

NOTES:

1. ALL COMPONENTS AND PIPING, OUTSIDE THE INVERDE MODULE, ARE SUPPLIED BY OTHERS.
2. SCHEMATIC IS A SIMPLIFIED GUIDELINE AND NOT FOR CONSTRUCTION. DETAILS OF THE PIPING DESIGN SHOULD ACCOMMODATE SITE REQUIREMENTS AND LOCAL AND NATIONAL CODES.
3. ALL PIPING TO THE UNIT SHOULD BE SELF-SUPPORTING.
4. THERMOSTATIC VALVE CONTROL TEMPERATURE IS 170°F.
5. AUTOMATIC AIR VENTS SHOULD BE INSTALLED AT ALL SYSTEM HIGH POINTS. DRAINS SHOULD BE INSTALLED AT ALL SYSTEM LOW POINTS.
6. PUMP IS SIZED FOR 30 GPM CONTINUOUS FLOW INCLUDING 7.0 PSI RESTRICTION FOR PIPING EXTERNAL TO THE MODULE.
7. SELECT EXPANSION TANK FOR 15 PSIG FILL PRESSURE. EXPANSION TANKS ARE AVAILABLE FROM AMTROL THAT ARE PRECHARGED AND INCLUDE AN INTERNAL PRESSURE REDUCING VALVE (FILL-TROL MODEL)
8. ALL WATER PIPING SHOULD BE INSULATED AND INCLUDE AN ALL-SERVICE JACKET.
9. DO NOT INSTALL A CHECK VALVE ON THE DISCHARGE SIDE OF THE UNIT.

LEGEND

- (P) PRESSURE GAUGE-RECOMMENDED 0-60 PSI LIQUID FILLED GAUGES
- (T) TEMPERATURE GAUGE-RECOMMENDED 0-250°F THERMOMETER.
- NORMALLY-CLOSED VALVE
- NORMALLY-OPEN VALVE
- CHECK VALVE
- UNION
- STRAINER
- CUSTOMER PIPING
- TECOGEN PIPING

TECOGEN
45 First Avenue Waltham,MA 02451

DRAWN	DATE	ENGINEER
John Freeman	10-20-08	

TITLE: TECOGEN INV-100 HEAT RECOVERY PIPING

PRODUCTION PART NUMBER:

SIZE	DRAWING NUMBER	SHEET	REV	CAD NUMBER
B	INV-100-05	1/1	C	INV-100-05

Drawing 13 INV-100 Heat Recovery Piping

REV	DESCRIPTION	DATE	BY	APPR
A	RELEASED FOR PUBLICATION	10-27-08	JF	
B	ADDED TABLE	3-17-09	JF	

GENERATOR / PCS COOLING SYSTEM SPECIFICATION		
	CONTINUOUS	PEAKING / STANDALONE
TYPE	CUSTOMER SUPPLIED FLUID COOLER OR HEAT RECOVERY SYSTEM	
FLUID	50/50 PROPYLENE GLYCOL / WATER MIXTURE *	
MAX. HEAT RATE	27,000 BTU/HR	34,000 BTU/HR
FLOW	8 GPM	
MAX. INLET TEMP	129°F	
MAX. OUTLET TEMP	137°F	139°F
MIN. INLET TEMP	40°F	
MAX. EXTERNAL RESTRICTION	5.0 PSI	
EXPANSION TANK	15 PSI PRECHARGED BLADDER TYPE (NOTE 7)	

* GLYCOL CONCENTRATION IS DEPENDANT ON DEGREE OF FREEZE PROTECTION REQUIRED.

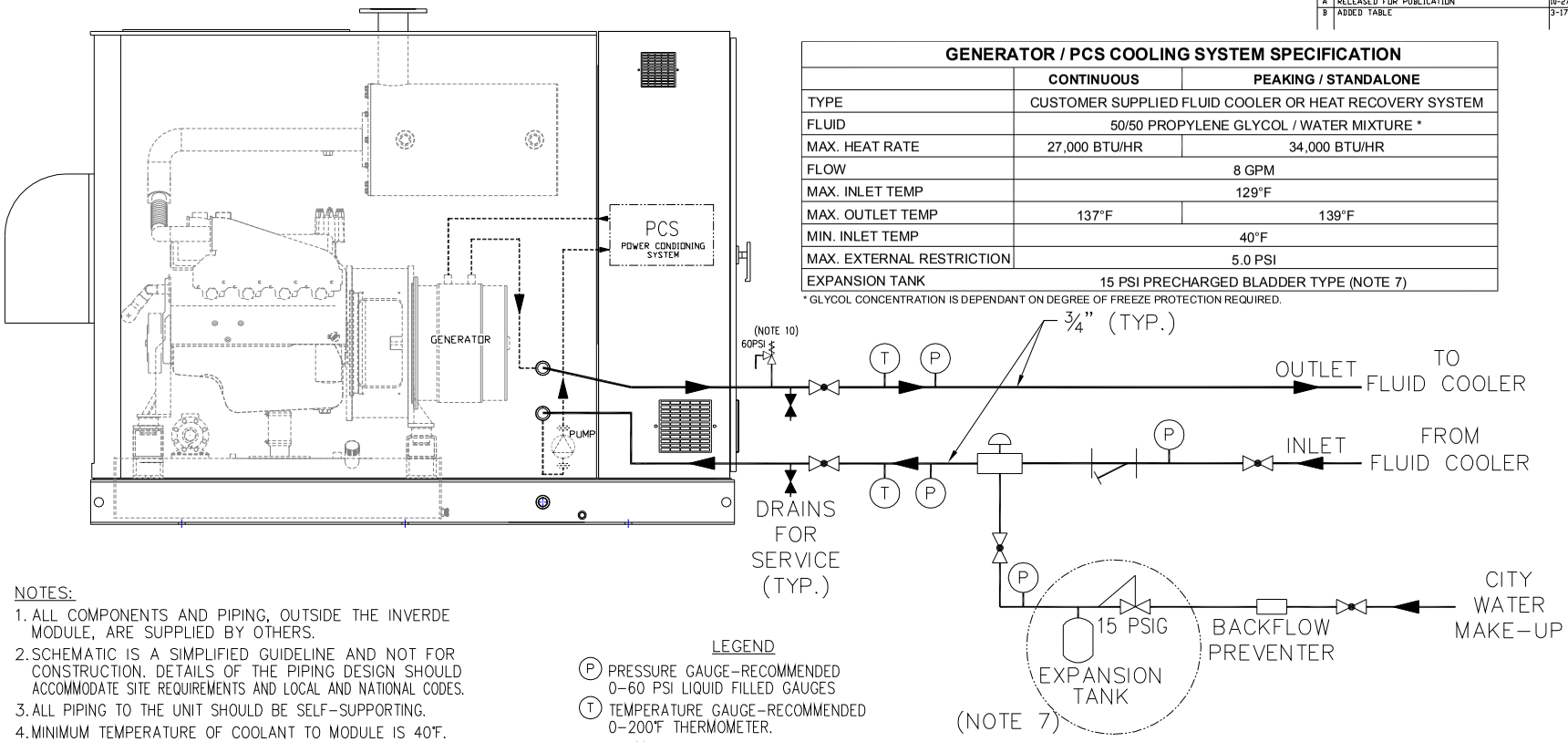

NOTES:

1. ALL COMPONENTS AND PIPING, OUTSIDE THE INVERDE MODULE, ARE SUPPLIED BY OTHERS.
2. SCHEMATIC IS A SIMPLIFIED GUIDELINE AND NOT FOR CONSTRUCTION. DETAILS OF THE PIPING DESIGN SHOULD ACCOMMODATE SITE REQUIREMENTS AND LOCAL AND NATIONAL CODES.
3. ALL PIPING TO THE UNIT SHOULD BE SELF-SUPPORTING.
4. MINIMUM TEMPERATURE OF COOLANT TO MODULE IS 40°F.
5. UNIT CONNECTION SIZE IS 3/4" FPT.
6. UNIT-MOUNTED PUMP IS SIZED FOR 8 GPM CONTINUOUS FLOW INCLUDING 5.0 PSI RESTRICTION FOR PIPING EXTERNAL TO THE MODULE.
7. SELECT EXPANSION TANK FOR 15 PSIG FILL PRESSURE. EXPANSION TANKS ARE AVAILABLE FROM AMTROL THAT ARE PRECHARGED AND INCLUDE AN INTERNAL PRESSURE REDUCING VALVE (FILL-TROL MODEL).
8. ALL WATER PIPING SHOULD BE INSULATED AND INCLUDE AN ALL-SERVICE JACKET.
9. AUTOMATIC VENTS SHOULD BE INSTALLED AT ALL SYSTEM HIGH POINTS. DRAINS SHOULD BE INSTALLED AT ALL SYSTEM LOW POINTS.
10. RELIEF VALVE SHOULD BE INSTALLED IN LOCATION SHOWN.

LEGEND

- (P) PRESSURE GAUGE-RECOMMENDED 0-60 PSI LIQUID FILLED GAUGES
- (T) TEMPERATURE GAUGE-RECOMMENDED 0-200°F THERMOMETER.
- NORMALLY-CLOSED VALVE
- NORMALLY-OPEN VALVE
- CHECK VALVE
- UNION
- STRAINER
- RELIEF VALVE 60 PSI, 35,000 BTU/HR
- CUSTOMER PIPING
- TECOGEN PIPING

TECOGEN

45 First Avenue Waltham,MA 02451

DRAWN	DATE	ENGINEER
John Freeman	10/27/08	

TITLE: TECOGEN INV-100 GENERATOR / PCS COOLANT SYSTEM PIPING

SIZE	DRAWING NUMBER	SHEET	REV	CAD NUMBER
B	INV-100-03	1/1	B	INV-100-03

PRODUCTION PART NUMBER:

Drawing 14 INV-100 Generator Cooling Loop Piping

4. Start-up [x] Supplied [ ] Not Supplied

Note

Tecogen strongly recommends that the start-up of the TECOGEN® be done by Tecogen factory personnel. If it is not done by Tecogen, it is necessary that those responsible obtain and follow a TECOGEN® INV-100 Start-up Procedure. This procedure should be completed and sent back to the Tecogen in order to initiate the warranty coverage. Operating units, that do not have this Start-up Procedure completed, will not be covered under warranty.

4.1 Pre-Start Checklist

Prior to start-up, Tecogen requires that the customer (or installing contractor) complete a Pre-start checklist before scheduling a start-up date. The checklist is available from Tecogen's National Service Manager at 781-466-6450. The completed checklist must be received and approved by Tecogen ten(10) working days before the start-up. Some of the items included in the checklist are as follows:

1. Water piping to unit must be complete and flows balanced. This includes a city water make-up line with 20 psi of pressure at the unit. Also, the expansion tank must be installed.
2. Exhaust piping must be complete and built to proper codes and Tecogen guidelines.
3. Gas piping must be complete and there should be adequate gas pressure at the unit (see table in Section 2). For units equipped with the emission control system option, 20 in wc is ideal.
4. Electrical power wiring to the unit must be complete.
5. Engine coolant relief valve drain must be installed.
6. There must be sufficient building load to run the unit.

4.2 Start-up Scope

The Tecogen Service person, who administers the start-up, will complete a Start-up Procedure. The scope of this includes the following:

1. Site inspection.
2. Verification of site parameters such as flows, gas pressure, city water pressure, and electrical power.
3. Verification of electrical interconnections. Voltage/Frequency Variation Test. (Required for compliance with California Rule 21, and NYSIR.)
4. Verification that the phoneline and modem are working properly. Download of updated software if necessary.
5. Operation and set-up of engine.
6. Running the unit at full load and verifying that operating parameters are within specification.
7. Recording data.
8. Write-up of any follow-up action items required by the site.
11. Obtaining responsible site person's signature that start-up is complete.

Once the start-up is complete, the warranty period will commence. Tecogen will send out a letter confirming the completion of start-up and reiterating any action items required.

5. Warranty

5.1 Standard Parts and Labor Warranty

All TECOGEN® cogeneration units are furnished with a standard Parts and Labor Warranty Statement. This is presented below.

Note

If a service call is initiated by the customer, where it is determined that the problem is not covered by this warranty, the customer will be billed for labor and expenses at our standard rates.

TECOGEN COGENERATION
STANDARD
PARTS AND LABOR
WARRANTY STATEMENT

Tecogen warrants the product to be free of defects in material and workmanship under normal use and service for six (6) months from the date of start-up, twelve (12) months from the date of shipment, or 1500 hours of operation, whichever occurs first. The product is covered if properly installed and maintained, and operated under normal conditions.

Any item which, within the warranty period, is promptly reported in writing to Tecogen as being defective and which is found to Tecogen's reasonable satisfaction to be defective upon examination by Tecogen will, at the option of Tecogen and within a reasonable time period, be repaired or replaced with a new item or factory-rebuilt item of at least the same quality as new.

Defective items replaced under this warranty shall, upon Tecogen's request, be returned to and shall become the property of Tecogen. Labor will be either by a factory technician or an authorized agent at Tecogen's option. Labor will only be furnished for the replacement of defective part or parts and does not cover the cost incurred in shipping or handling. In addition, an allowance will be made for a maximum of (4) hours for total diagnostic and travel time, which will only be paid if it results in a replacement of a warranty part.

Warranty does not cover, and Tecogen makes no warranty with respect to, any defect or failure resulting in whole or in part from: ordinary wear and tear, abuse, misuse, corrosion, chemical damage, negligence, accident, changes in government regulation, fire, theft, improper operation, overloading, war, riots, civil commotion, flood, storm, earthquake, or any similar event beyond the control of Tecogen. This warranty excludes liability for corrosion, erosion, algae, scaling or slime due to improperly treated or untreated water in this equipment.

Warranty is invalid if buyer: fails to protect product from weather or elements; removes product from its place of original installation; removes, defaces or alters serial number; uses a provider not authorized by Tecogen to maintain, repair, or alter product; fails to follow good and acceptable engineering specifications and trade practices and Tecogen's specifications and instructions for installation; or fails to provide reasonable, necessary, and required maintenance and replacement of scheduled replacement parts and follow Tecogen's operation and maintenance instructions.

Warranty of items furnished by Tecogen, but not manufactured by Tecogen, shall not extend beyond those transferable to buyer from the manufacturer of such items. Warranty does not cover any components not furnished by Tecogen. Tecogen is not liable for any damage to buildings or property (except damage to the product resulting from a defect covered by this warranty), loss of time or pay, personal injury, or for any consequential incidental or special damages or expenses resulting from the product or its performance or failure to perform.

Tecogen is not responsible for any expenses incurred without prior authorization in writing from Tecogen.

All warranty claims must be sent to Tecogen in writing to the following address:

c/o Service Manager
Tecogen
45 First Avenue
Waltham, MA 02451

THE FOREGOING WARRANTY IS EXCLUSIVE AND IN LIEU OF ALL OTHER WARRANTIES, EXPRESS OR IMPLIED, INCLUDING BUT NOT LIMITED TO ANY IMPLIED WARRANTY OF MERCHANTABILITY OR OF FITNESS FOR A PARTICULAR PURPOSE. NO IMPLIED WARRANTY ARISING BY USAGE OR TRADE, COURSE OF DEALING OR COURSE OF PERFORMANCE IS GIVEN BY TECOGEN OR SHALL ARISE BY OR IN CONNECTION WITH THE SALES AGREEMENT AND/OR TECOGEN'S AND/OR BUYER'S CONDUCT IN RELATION THERETO OR TO EACH OTHER, AND IN NO EVENT SHALL TECOGEN BE LIABLE ON ANY SUCH WARRANTY WITH RESPECT TO ANY PRODUCT.

6. Service Contract ☒ Supplied ☐ Not Supplied

Complete first-year Maintenance Contract is included for this project. Contract covers a total of 20,000 unit-hours operation @ $2.00/hr per unit, or approximately 6,667 cumulative run-hours per unit.

TECOGEN
Natural Gas Engine-Driven Products

TECOCHILL®
TECOFROST™
COGENERATION

June 7, 2010

Mr. Mark Rawson
Project Manager
Sacramento Municipal Utility District
Advanced, Renewable, and Distributed Generation
6201 S Street, MS B257
Sacramento, CA 95817

Subj: **SAMPLE MAINTENANCE QUOTATION & AGREEMENT FOR TECOGEN INV-100 PREMIUM POWER MODULES AT SMUD**

Dear Mark:

As requested, this provides info about maintenance costs for the three (3) Tecogen INV-100 Premium Power Modules planned for the Microgrid Demonstration Project at SMUD's headquarters in Sacramento.

This confirms that the cost for a comprehensive Tecogen factory service program would be $0.02 per kilowatt-hour. For example, if three (3) units are operated at 6631 run-hours/year, annual maintenance costs would work out to $39,786/ year.

In case it's helpful, attached is a copy of Tecogen's standard Maintenance Agreement, for reference. The agreement shows a standard maintenance rate of $2.00 per operating-hour per module, which is equivalent to $.02/ kWh, since each unit is rated at 100 kW.

This pricing is the same as was quoted to you 2½ years ago (February 2008).

If you have questions or need additional information, please call me at 503-641-1768, of course. Thank you.

Sincerely,

William R. Martini
District Manager

Attachments
:SMUDcertsDemo15-letterReMaintCost.doc

Western Office:
2245 111th Avenue
Portland, OR 97229
503.641.1768 (fax) 503.641.2689

Main Office:
45 First Avenue
Waltham, MA 02451
781.466.6400 (fax) 781.466.6466

6. Service Contract, page 2 of 6

TECOGEN
Natural Gas Engine-Driven Products

45 First Avenue, Waltham, MA 02154
ph: 781-466-6400 fax: 781-466-6466

TECOGEN'S
SERVICE & MAINTENANCE PROGRAM

Tecogen's factory service program has been very popular with its customers over the years. Almost every site has elected to participate in this optional factory program since the mid-1980's.

This comprehensive program covers much more than a conventional warranty does. It basically covers anything required by the "blue box" (i.e., the Tecogen unit), including:

- all scheduled maintenance (preventative maintenance, or P.M., including oil changes, plugs, tune-ups, etc.)
- all unscheduled service
- all major parts replacements, including engine and generator replacements, as needed
- all parts, labor, mileage, and consumables
- coverage of both defects and normal wear-and-tear.

The final page of attached sample agreement provides a more detailed breakdown ("schedule") of what regular scheduled service consists of. This is similar to what one would find in a car's owner's manual.

Typical contract terms are three to five years, but other terms are possible, of course.

All work is performed by locally based, fully trained, *factory* technicians. Work is done by Tecogen, the manufacturer, not by third parties.

Also, the agreement is structured so that Tecogen's maintenance charges are based on the system's *actual* run-hours. This simple structure is intended to keep Tecogen's interests aligned with a site's. In other words, if the unit(s) aren't running for a site, no charges are incurred. Maintenance billings are completely linked to the actual run-time of the units. This is a very fair way to structure the program. If the system runs a lot, then the monthly or quarterly or monthly bill goes up. If the system runs less or is off, then the monthly or quarterly maintenance charge goes down.

This linkage helps ensure that the energy cost savings a customer receives from the system are always much greater than the maintenance charges.

To put the maintenance program into effect, a customer simply needs to sign an agreement and return it to Tecogen.

6. Service Contract, page 3 of 6

TECOGEN *Natural Gas Engine-Driven Products*

TECOCHILL®
TECOFROST™
COGENERATION

45 First Avenue, Waltham, MA 02451
phone: 781.466.6400, fax: 781.466.6466

FOR OFFICE USE ONLY 070188
JOB NO. _____
MODEL NO. _____

Maintenance Agreement
TECOGEN® Cogeneration Systems

CUST NO: _____	**SITE NO:** _____ **SALE NO.** _____
BUYER:	**SITE:**
CORPORATE NAME: SMUD	**CORPORATE NAME:** (same)
STATE OF INCORPORATION: CA	**STATE OF INCORPORATION:** CA
ADDRESS:	**ADDRESS:** (same)
Sacramento, CA	
CONTACT:	**CONTACT:** (same)
PHONE/FAX: 916- - ; (email:)	**PHONE/FAX:** (same)

EQUIPMENT DESCRIPTION

a. **QUANTITY:** Three (3) TECOGEN® Cogeneration Module(s)
b. **MODEL #(S):** TECOGEN INV-100 Premium Power Module
c. **SERIAL #(S):** _____

SERVICE CHARGE

The maintenance service charge for each Cogeneration Module for the first 12-month period of the Maintenance Agreement shall be an amount equal to a flat rate of $ 2.00 times the number of hours of operation of each Cogeneration Module during the 12-month period.

TERMS OF PAYMENT

QUARTERLY BILLING WITH PREBILL ☐ If selected, Buyer will pay the Maintenance Service charge in advance on a quarterly basis, provided that the first payment shall not be due until 30 days following the commencement of operation of each module. The amount of each quarterly payment shall be based on an assumed 1500 hours of operation by each cogeneration module during the quarter. Seller will calculate an adjustment within 30 days following the end of each quarter to reflect the difference between the actual number of hours of operation during the quarter and the assumed 1500 hours of operation. Seller will pay Buyer the appropriate adjustment amount in the event that the actual operation is less than 1500 hours during the quarter. Buyer will pay Seller the appropriate additional amount in the event that the actual operation exceeds 1500 hours during the quarter. All adjustment amounts will be paid within 15 days following notice from Seller to Buyer setting forth the adjustment calculation.

MONTHLY BILLING ☒ If selected, Buyer will be billed each month, for actual hours of operation during previous month.

DURATION OF AGREEMENT: (12) MONTHS	**EFFECTIVE DATE:** / / 11 (start-up)
AUTOMATIC RENEWAL ☒	

NOTES: 1. Agreement covers complete Tecogen units ("the blue boxes"). Included are its special "integrated components" (pump & valve module, emissions controls). 2. Agreement does not cover external "system" components (i.e., HX's, radiators, expansion tanks, external relays, gas regulator, mixing valves, pumps, controls, meters, fans, phoneline, piping, etc.).

6. Service Contract, page 4 of 6

The Maintenance Agreement on the above equipment is further governed by the Terms and Conditions of Maintenance for TECOGEN Cogeneration Systems (attached) which forms an integral part of this agreement.

ACCEPTED AND AGREED TO BY:

SMUD (BUYER)	TECOGEN Inc. (SELLER)
BY:	BY:
NAME:	NAME: William R. Martini
TITLE:	TITLE: District Manager
DATE:	DATE: 6/7/10

TERMS & CONDITIONS OF MAINTENANCE
TECOGEN Cogeneration Systems

1. GENERAL. The Terms and Conditions stated herein shall, together with the attached Maintenance Agreement, form the agreement for maintenance of one or more TECOGEN Cogeneration Module(s) by a Buyer (Buyer) from TECOGEN (Seller).

   By its signature hereto, the Buyer agrees that the provisions of this Agreement shall supersede any term or condition regarding maintenance set forth in any purchase order, contract, or other document delivered by the Buyer to the Seller.

   This agreement covers only the Cogeneration Module(s) or portion(s) of the Cogeneration Module(s) specified in the attached SERVICE CHARGE section of the Maintenance Agreement and manufactured by Seller and not the associated installed equipment.

2. TERM. The maintenance period under this maintenance agreement shall be as set forth in the DURATION OF AGREEMENT section and shall begin on the earlier of commencement of operation of the Cogeneration Module(s) or 6 months following shipment of the Cogeneration Module(s), unless otherwise stated.

3. SERVICE ESCALATION. Seller will increase the maintenance service charge rate on each anniversary of the commencement date of the maintenance period of this Maintenance Agreement by a factor equal to (1) the rate of increase in the Consumer's Price Index as published by the U.S. Government for the year immediately preceding, plus 2%, or 5% whichever is higher, or as specified by the attached Tecogen Maintenance Quotation.

4. ACCESS. Buyer will allow Seller and Seller's representatives access to the Cogeneration Module(s) during regular business hours to perform scheduled and unscheduled maintenance and to make periodic inspections of the Cogeneration Module(s).

5. SCHEDULED MAINTENANCE SERVICE. Seller's representatives shall make routine maintenance visits to the Buyer's Cogeneration Module facility at least once in every 1,000 hours of operation, or at intervals prescribed in its "TECOGEN Service Interval Guideline", whichever is greater. Seller reserves the right to modify this guideline, including services performed and service intervals, at any time during the Agreement period at its discretion.

   Buyer shall notify Seller no less than five (5) days in advance of the passage of each 750 hours of operation for each module. In the event that the unit is equipped with the Tecogen Remote Monitoring and Control System option (RMCS), this Buyer requirement is waived, so long as Buyer maintains at his expense a working telephone line and allows Seller telephone access to the Cogeneration Module(s).

6. UNSCHEDULED REPAIR SERVICE. Seller responsibilities for unscheduled service repair shall be as follows:

   In the event of a breakdown, malfunction, or failure of the Cogeneration Module(s), Buyer shall promptly notify Seller of such event and Seller shall use its best efforts to repair the Cogeneration Module(s); provided, however, that if such breakdown, malfunction, or failure results from any of the exclusions set forth in this Agreement, Buyer shall reimburse Seller for all service charges paid to repair the Cogeneration Module(s) at the prevailing rate per hour of serviceperson time (shop-to-shop), plus all travel expenses and material costs paid. Any service performed after 5:00 p.m. will be charged at time and one-half and any service performed on Sundays will be charged at double time.

   Also, in the event of a breakdown, malfunction, or failure of any equipment or any part thereof *outside* the Cogeneration Module(s), Buyer will promptly notify Seller of such event.

   Buyer shall not, during the term of this Maintenance Agreement, without the prior written consent of Seller, allow any person other than Seller or Seller's representative to perform any maintenance service, repairs, or adjustments to the Cogeneration Module(s). However, those activities performed by the Buyer's designated maintenance specialist for the Cogeneration Module(s), where such activities are performed under the supervision of, or at the express request of, representatives or service personnel of Seller, shall be permitted.

   The Seller's responsibilities for unscheduled repair shall not extend to items not part of the Cogeneration Module(s), unless such coverage is explicitly stated on the front of this agreement as included.

7. EXCLUSIONS. This Maintenance Agreement does not cover any maintenance or repair to any Cogeneration Module(s) that results in whole or in part from:
   a. Willful damage, misconduct, or negligence of Buyer, its employees, agents or invitees;
   b. Fire, theft, or other risks now or hereafter normally covered by an "all risks" policy of insurance, including extended coverage;
   c. War, riots, civil commotion, flood, storm, earthquake, or any similar event;
   d. Any alteration, addition to, substitution, or replacement of any part of the Cogeneration Module(s) or related electrical, plumbing, or fuel connection not authorized by Seller;
   e. Adjustment, maintenance, service, or repair to the Cogeneration Modules(s) or related electrical plumbing or fuel connections not authorized by Seller;
   f. Any use of the Cogeneration Module(s) in any manner other than its designed use;
   g. Improper installation of the Cogeneration Module(s) by anyone other than Seller or Seller's authorized representatives;
   h. Buyer's failure to keep the Cogeneration Module(s) protected from the weather or elements;
   i. Buyer's failure to perform any covenant contained in this Maintenance Agreement.

8. PARTS REPLACEMENT. Buyer agrees that upon replacement of any parts, lubricants, refrigerants, components, or other materials by Seller during the term of this Maintenance Agreement, the corresponding items removed shall become the property of Seller.

   The engine(s) contained in the Cogeneration Module(s) will be repaired or replaced as necessary to correct mechanical defects or failures of an engine. The cost of engine replacement or repair is included in the maintenance service charge. In the event of engine replacement, Seller will supply a similar new engine or, for engine with removable cylinder liners, a similar rebuilt engine. The replaced engine that is removed from the Cogeneration Module shall become the property of Seller.

9. LIMITATIONS OF LIABILITY. In no event shall Seller or its agents be liable for any indirect, incidental, consequential, or special damages, including but not limited to loss of use or anticipated profits, whether in an action on contract or tort. The maximum liability of Seller to Buyer under this Agreement shall not exceed the maintenance service charge received by Seller prior to the determination of such liability.

10. ACCEPTANCE. All orders for maintenance are subject to acceptance in writing by an authorized employee of Seller.

11. OTHER. The terms of this Agreement shall be binding upon and inure to the benefit of the successors and assigns of each of the parties hereto. Except as set forth herein, neither party shall assign any of its rights or delegate any of its duties hereunder without the prior written consent of the other.

    The Maintenance Agreement including these Terms and Conditions sets forth the entire understanding of the parties regarding maintenance service of Cogeneration Module(s) and supersedes all prior agreements, communications, representations or warranties, whether oral or written, by an officer, employee or representative of either party regarding such maintenance service.

    Any performance or covenant under this Agreement may be waived in writing signed by both parties. No waiver by either party of any default shall operate as a waiver of any other default or of the same default on a future occasion.

    Any change in the terms of this Agreement must be in writing and signed by both parties.

    Buyer and Seller agree that if any provision of this Agreement is held by any court to be illegal or unenforceable, the remaining provision shall, to the extent practicable, remain in full force and effect.

    This agreement shall be construed and enforced in accordance with the laws of the Commonwealth of Massachusetts.

12. TERMINATION. This agreement may be terminated by either party upon 90 days written notification to the other party.

13. SUSPENSION. Service under this Agreement will be suspended upon written notification by Seller to Buyer if maintenance fees are in arrears.

14. ADDITIONAL CHARGES. In addition to the maintenance service charge set forth, Buyer shall also be responsible for the charges incurred as follow:
    a. Any outside rigging charges shall be billed to Buyer at cost.
    b. Any outside agency emissions testing charges shall be billed to Buyer at cost.
    c. Any maintenance or service covered by this Agreement requested by Buyer to be performed outside normal business hours shall be billed to Buyer at the difference between regular and overtime hourly rates then in effect.
    d. This Agreement only covers maintenance for the TECOGEN equipment specified. Buyer will be billed for any requested service calls and work due to problems outside the TECOGEN equipment at Seller's prevailing Time and Material Rates, including travel time, mileage, and actual hours worked. Seller will not exceed two hours of diagnosis and/or corrective work without the express approval of Buyer.

15. FINANCE CHARGE. A charge of 18% per annum will be charged on all late payments (i.e. all payments made outside the agreed upon payment terms).

16. COLLECTIONS. Buyer agrees to pay all costs and expenses of collections, including, but not limited to, all Attorneys' fees incurred up to the maximum permitted by applicable law.

Routine Service

Table 6.1 InVerdē®
Scheduled Service Interval Guidelines

Category	Interval	Item	Action
A	750 EFLH[1] OR 1000 Operating Hours (whichever occurs first)	Engine Lube Oil	Replace
		Engine Oil Filter	Replace
		Engine Air Filters[1]	Replace
		Spark Plugs	Replace
		Air Inlet Filters[1]	Inspect & Clean or Replace as Necessary
		PCV Valve	Inspect
		Battery	Inspect and Clean Terminals
		Timing	Check & Adjust if Necessary
		Coupling	Inspect
		Engine Mounts	Inspect
		Condensate Trap	Clean
		Ventilation Fans	Verify Operation
		Safety Circuit [2]	Verify Operation (DSHT, PSHT)
		General	Check for Leaks, Check Electrical Connectors
		Catalyst	Monitor Emission Levels
B	1500 EFLH[1] OR 2000 Operating Hours (whichever occurs first)	A Items	
		Generator	Grease Bearings
		Distributor Cap	Replace
		Rotor	Replace
		Distributor	Check for Shaft Bushing Wear
		Ignition Wires	Replace
		PCV Valve	Replace
		Engine Evaluation	Blowby & Compression Test (Omit on First "B" Service)
		Engine Valves	Adjust
		O_2 Sensors	Replace
C	6000 EFLH[1] OR 8000 Operating Hours (whichever occurs first)	"A" & "B" Items	See Above
		Cylinder Heads	Replace (if necessary)
		Catalyst [4]	Inspect, Wash or Replace every other interval (ie.16,000 Operating Hours)
D	Typical Life[3]	Engine, Partial	Replace as indicated by Blowby and Compression Tests
E	As Required Items	Thermostatic Valve	Replace Thermostatic Element
		Water Pump	Replace Shaft Seal

Notes:

1. *A dusty environment may require more frequent service for air filters.*
2. *The Safety Circuit acts as a redundant safety to ensure safe shutdown in the event of a microprocessor failure.*
3. *Typical engine life with proper service is 16,000-20,000 EFLH.*

7. Pre-Start Checklist

TECOGEN
45 First Avenue
Waltham, MA 02451
(781) 466-6400
FAX: (781) 466-6466

InVerdẽ®

TECOGEN PRE-START CHECK LIST

Verification of the following items is required prior to start-up. Please complete and mail, fax or email to Tecogen at least ten (10) working days before scheduled start-up. Check item if it is complete. Start up for unit (s) will not be scheduled until the following form is complete. If any are not complete when factory start-up person arrives on site, and additional days or an extra trip is required due to incomplete installation, additional labor and expenses will be charged.

Site Address:

_____
_____
_____
_____
_____

Site Contact, Phone Number (s) and email:

_____
_____
_____
_____

Installer Contact & Phone No.:

_____
_____

List Completed By:

_____
(Name & Title)

_____
(Date)

A. PACKAGE

1. Package leveled and properly secured. ☐

B. PIPING

1. Heat recovery piping completed, filled and pressurized. ☐
2. Generator/Electronics cooling piping completed, filled and pressurized. ☐
3. Fuel System piping completed. ☐
4. Piping leak tested, filled, air bled from all systems. ☐
5. System pumps tested and flow rates verified. ☐
6. City water make-up and expansion tanks of proper size properly installed with 15 psi static pressure on both systems. ☐

7. Pre-Start Checklist

C. ELECTRICAL SUPPLY

1. All electrical connections have been made at the **InVerde®**, voltages verified. ☐
2. All external control and interlock wiring connections have been checked and are operational (flow switches, time clocks, pump controls, etc.). ☐
3. Connections made to Reactance Panel (power wires and sensing wires) if applicable. Applies to multi-unit installations. (sensing wires must be twisted) ☐
4. If unit is to run in stand-alone mode all pumps, radiators, etc. are supplied from the stand-alone buss. ☐

D. GAS SUPPLY

1. Shipped loose Gas Solenoid Valve installed at gas inlet to unit in proper direction. See arrow on bottom of solenoid. ☐
2. Proper gas pressure (10" to 28" WC) at the **InVerde®** inlet connection. ☐
3. Strainer is installed in gas supply line, and is clean. ☐

F. EXHAUST PIPING

1. Installed with appropriate condensate drains and properly sloped away from the unit. ☐
2. Appropriate flex connections, constant supports, pipe guides, pipe supports, and insulation properly installed. ☐

G. CONTROL WIRING

1. All wiring is 18 ga. Twisted and shielded. No pirtails ☐
2. Wires from the protection relay have been terminated on TBO 4 and 18 or each **InVerde®** ☐
3. Communication wires between multiple **InVerde**'s have been installed on J18. ☐
4. Communication wires have been installed to the EMS. ☐
5. Wires terminated on interface board (including phone line) do not prevent the hinged panel from being fully opened. ☐
6. Wires have been terminated in the appropriate locations for thermal or electrical load following. ☐

7. Pre-Start Checklist

H. GENERAL

1. Contractor who will be available to assist and guide our start-up personnel. ☐

   Contact: _____

   Cell Phone or Pager: _____

2. All parts shipped loose with the unit are available at start-up. Check packing list to verify. ☐

3. Operating and or service personnel scheduled for training. ☐

4. Telephone line available for RMCS connection. ☐

   Number: _____

DESIRED START UP DATE:_____

DIRECTIONS TO JOB SITE/PARKING RESTRICTIONS:

_____

_____

_____

_____

_____

_____

_____

HOTELS (AND PHONE NUMBERS) NEAR JOB SITE:

_____

_____

_____

_____

_____

_____

Mail/Fax to:
Tecogen
Attention: Application's Engineer
45 First Avenue
Waltham, MA 02451

Phone: (781) 466-6400

8. Material Delivery

The following form is to be completed by an authorized representative of the purchasing company. Return this sheet to:

Tecogen
45 First Avenue
Waltham, MA 02451
Attn: Applications' Engineer

Requested Date of Delivery: _____

Signed: _____

Print: _____

Title: _____

Date: _____

TECOGEN
45 First Avenue
Waltham, MA 02451

(781) 466-6400
(781) 466-6466 (Fax)

TECOGEN® and TecoDrive are trademarks of Tecogen

APPENDIX C:
Trane/ Thermax LT-10-C Absorption Chiller Documents

Appendix C - Trane/Thermax LT-10-C Absorption Chiller Documents

Submittal

Prepared For:
Peters Engineering

Date: *August 15, 2011*

Customer P.O. Number:

Sold To:
SMUD

Job Name:
ARC Student Center

Trane U.S. Inc. is pleased to provide the enclosed submittal for your review and approval.

Product Summary

Qty	Product
1	Thermax Absorption Chiller
1	Automatic Tube Brushing System

Mike Harwood
Trane
Phone: (916) 577-1122
Fax: (916) 577-1175

The attached information describes the equipment we propose to furnish for this project, and is submitted for your approval.

SUBMITTALS

FOR

LOW TEMPERATURE HOT WATER FIRED ABSORPTION CHILLERS (COGENIE SERIES)

PROJECT: **SMUD**

CHILLER MODEL: **LT 10 C**

NO. OF CHILLERS: **1**

THERMAX INC.
21800, Haggerty road, Suite 112
Northville,
MI 48167
USA

THERMAX LIMITED
Cooling & Heating Division
D-13, R. D. Aga Road,
Chinchwad, Pune 411 019
INDIA

Visit us at : www.thermax-usa.com or www.thermaxindia.com

Improving your business is our business

Table of Contents

S.No	CONTENTS
1.	General Arrangement & Foundation Drawing
2.	External P&I Drawing
3.	Foundation Drawing
4.	Control Panel General Arrangement
5.	Wiring Diagram
6.	Technical Checklist
7.	Chiller Data Sheet
8.	Quality Assurance Plan
9.	Lifting / Leveling instructions
10.	Operation & Maintenance Manual
11.	Material Safety Data Sheets
12.	MODBUS Address List
13.	Limited Warranty Statement

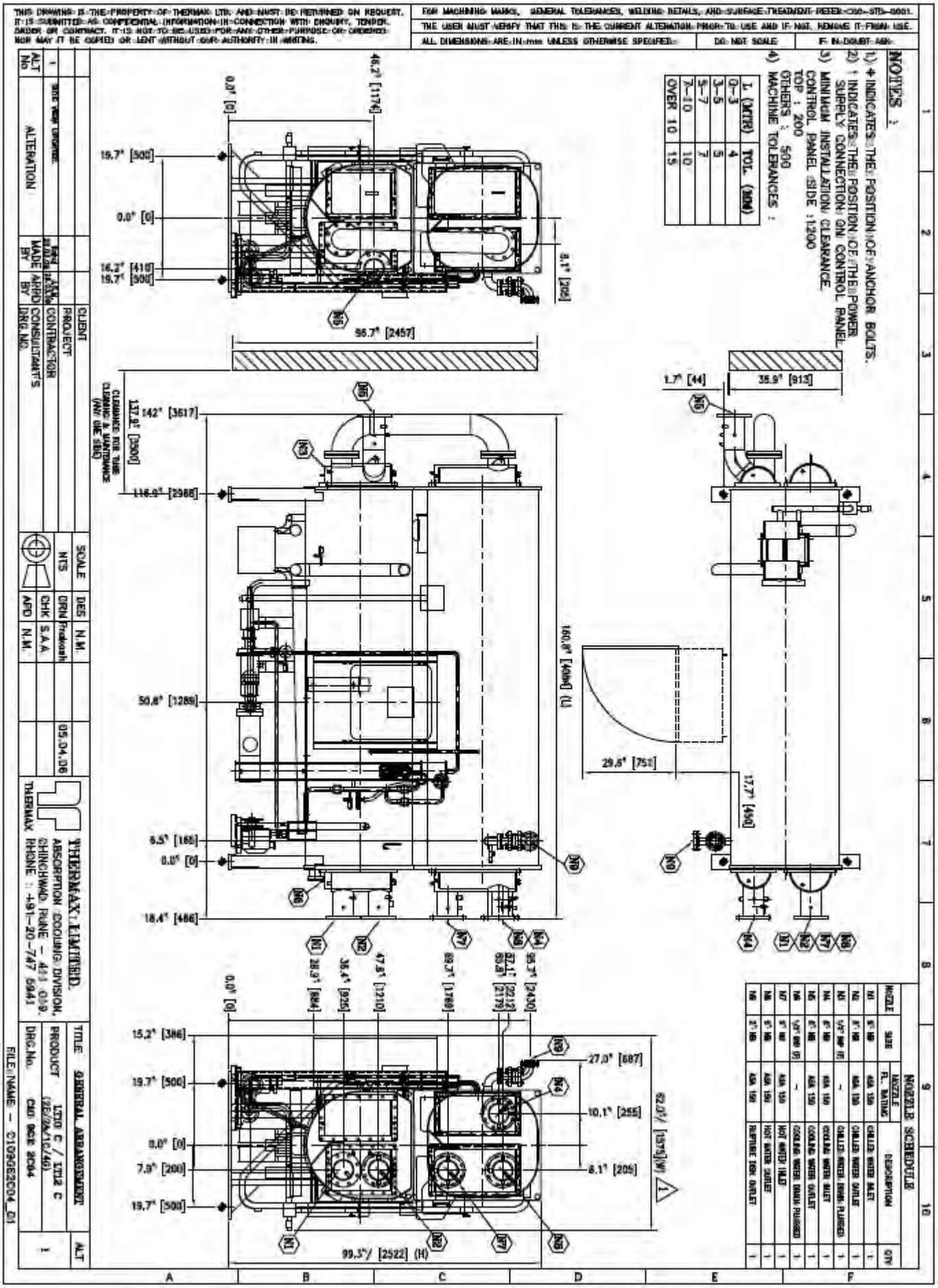
NOTES :
1) ◆ INDICATES THE POSITION OF ANCHOR BOLTS.
2) ! INDICATES THE POSITION OF THE POWER SUPPLY CONNECTION ON CONTROL PANEL.
3) MINIMUM INSTALLATION CLEARANCE
CONTROL PANEL SIDE : 1200
TOP : 200
OTHERS : 500
4) MACHINE TOLERANCES :
L (MTR) TOL. (MM)
0-3 4
3-5 5
5-7 7
7-10 10
OVER 10 15
NOZZLE SCHEDULE
DESCRIPTION
CHILLED WATER INLET
CHILLED WATER OUTLET
CHILLED WATER DRAIN PLUGGED
COOLING WATER INLET
COOLING WATER OUTLET
COOLING WATER DRAIN PLUGGED
HOT WATER INLET
HOT WATER OUTLET
RUPTURE DISK OUTLET
QTY
THERMAX LIMITED.
ABSORPTION COOLING DIVISION.
CHINCHWAD, PUNE - 411 019.
PHONE : +91-20-747 5941
TITLE GENERAL ARRANGEMENT
PRODUCT LTC0 C / LTC2 C
DRG.No. CAD DATE 2004
FILE NAME - C10A62C04_01
ALTERATION
SCALE NTS
DES N.M.
DRN Prakash
CHK S.A.A.
APD N.M.
05.04.06
CLIENT
PROJECT
CONTRACTOR
CONSULTANT'S
DRG.NO.
ALT NO.
MADE BY
APPD BY
THIS DRAWING IS THE PROPERTY OF THERMAX LTD. AND MUST BE RETURNED ON REQUEST. IT IS SUBMITTED AS CONFIDENTIAL INFORMATION IN CONNECTION WITH ENQUIRY, TENDER, ORDER OR CONTRACT. IT IS NOT TO BE USED FOR ANY OTHER PURPOSE OR CANNOT NOR MAY IT BE COPIED OR LENT WITHOUT OUR AUTHORITY IN WRITING.
FOR MACHINING MARKS, GENERAL TOLERANCES, WELDING DETAILS, AND SURFACE TREATMENT REFER CSO-STD-0001.
THE USER MUST VERIFY THAT THIS IS THE CURRENT ALTERATION PRIOR TO USE AND IF NOT, REMOVE IT FROM USE.
ALL DIMENSIONS ARE IN mm UNLESS OTHERWISE SPECIFIED.
DO NOT SCALE
IF IN DOUBT ASK.
46.2" [1174]
0.0" [0]
19.7" [500]
16.2" [410]
8.1" [206]
96.7" [2457]
142" [3617]
137.8" [3500]
116.9" [2968]
50.8" [1289]
6.5" [165]
18.4" [466]
160.8" [4084] (L)
1.7" [44]
35.9" [913]
29.6" [751]
17.7" [450]
15.2" [386]
27.0" [687]
10.1" [255]
7.9" [200]
62.0"/ [1575](W)
99.3"/ [2522] (H)

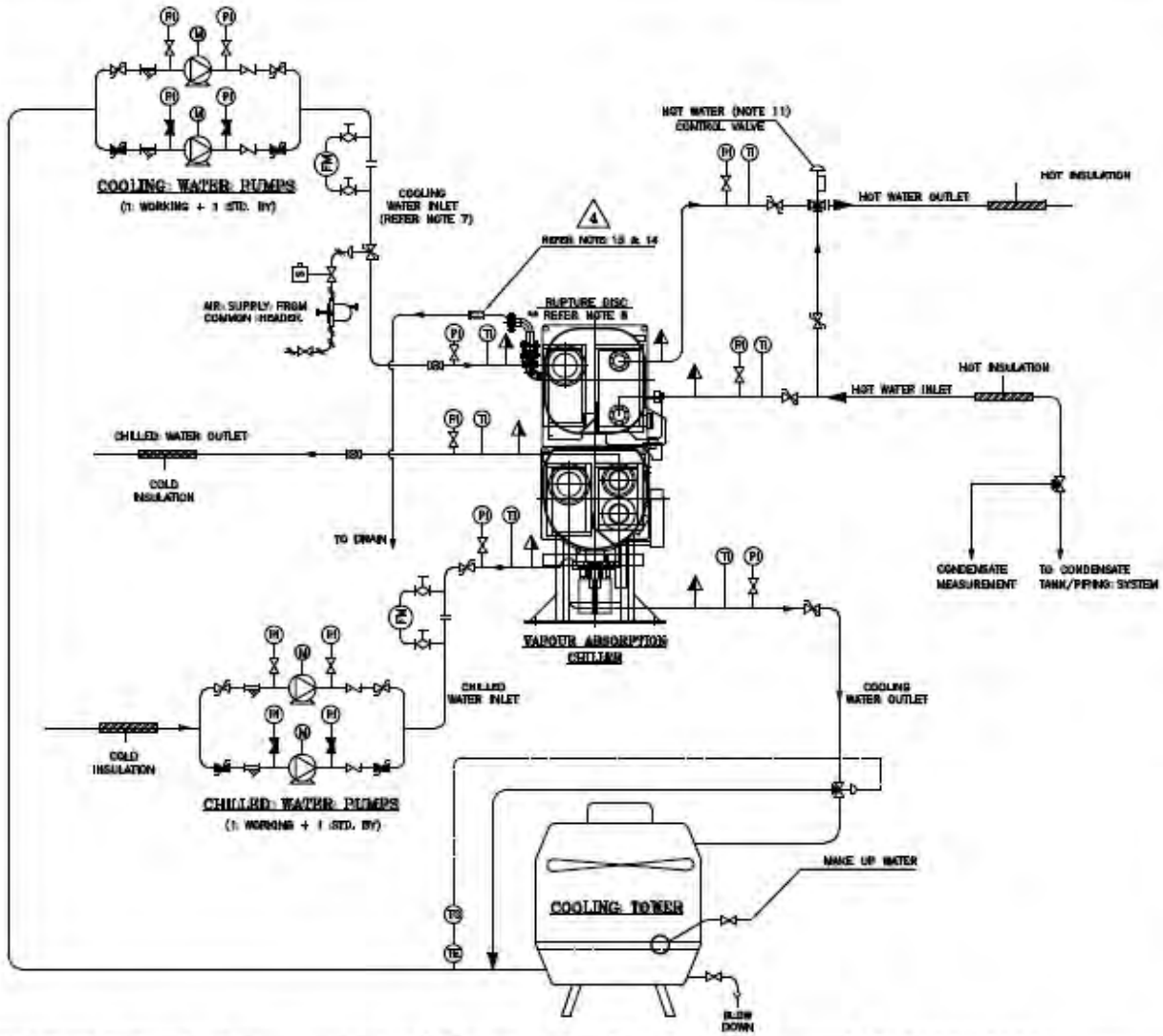

GENERAL REMARKS ON PIPE LAYING WORK

1. MAXIMUM WORKING PRESSURE IN COOLING/CHILLED WATER HEADERS IS 113.6 PSI(g). THIS SHOULD BE NOTED FOR DESIGN OF CHILLED WATER AND COOLING WATER SYSTEM.
2. MAXIMUM WORKING PRESSURE IN HOT WATER HEADERS IS 113.6 PSI(g). THIS SHOULD BE NOTED FOR DESIGN OF HOT WATER SYSTEM.
3. MINIMUM ALLOWABLE COOLING WATER INLET TEMPERATURE IS 64°F.
4. STEAM INLET TO THE CONTROL VALVE SHALL BE DRY SATURATED STEAM. DE-SUPERHEATER TO BE PROVIDED IF THE DEGREE OF SUPER HEAT EXCEEDS 27°F.
5. FOR FLANGES OF THE MACHINE REFER GENERAL ARRANGEMENT DRG.
6. LEASTCOUNT OF PRESSURE GAUGE IN CHILLED WATER & COOLING WATER LINE SHOULD BE 1 PSI OR LESS.
7. AUTO SHUT OFF VALVE IS MANDATORY IN COOLING WATER CIRCUIT. IF COOLING WATER PUMPS ARE NOT DEDICATED TO MACHINE.
8. RUPTURE DISK OUTLET TO BE PIPED OUT ACCORDING TO THE LOCAL RULES AND REGULATIONS. MAXIMUM PIPING ELEVATION SHALL NOT EXCEED THE HEIGHT OF M/C. (IF PROVIDED)
9. AUTOMATIC ARRANGEMENTS SHOULD BE PROVIDED TO STOP COOLING WATER FLOW IF THE CHILLED WATER FLOW STOPS.
10. NOZZLE ORIENTATIONS ARE SUBJECTED TO CHANGE AS PER FLOWS.
11. LEASTCOUNT OF PRESSURE GAUGE IN CHILLED WATER & COOLING WATER LINE SHOULD BE 0.1kg/sq.cm. OR BELOW.
12. AUTO SHUT OFF VALVE TO BE PROVIDED IF THE COOLING WATER PUMPS ARE NOT DEDICATED TO THE VAM.
13. RUPTURE DISK OUTLET TO BE PIPED OUT ACCORDING TO THE LOCAL RULES AND REGULATIONS. MAXIMUM PIPING ELEVATION SHALL NOT EXCEED THE HEIGHT OF M/C.
14. FLEXIBLE CONNECTION TO BE PROVIDED AFTER THE RUPTURE DISK OUTLET SO AS TO AVOID ANY LOAD ON THE RUPTURE DISK NOZZLE.

RECOMMENDED WATER QUALITY

ITEMS	CHILLED WATER (CIRCULATING)		COOLING WATER			
	For COPPER TUBES	For CARBON STEEL TUBES	FOR PLAIN COPPER TUBES		FOR CAR. STEEL TUBES	
			CIRCULATING	MAKE-UP	CIRCULATING	MAKE-UP
PH (25° C)	6.5 ~ 8.5	6.5 ~ 8.5	6.5 ~ 8.5	6.5 ~ 8.5	6.5 ~ 8.5	6.5 ~ 8.5
ELECTRIC COND. 25°C(mS/cm)	< 500	–	< 800	< 200	–	–
M ALKALINITY PPM	< 100	–	< 100	< 50	–	–
CHLORIDE ION (mg Cl/l)	< 100	< 1000	< 200	< 50	< 2000	< 500
SULPHURIC ACID ION (mg SO_4/l)	< 100	< 250	< 200	< 50	< 500	< 125
TOTAL HARDNESS (mg $CaCO_3$/l)	< 100	< 100	< 200	< 50	< 200	< 50
TOTAL IRON (mg Fe/l)	< 1.0	< 1.0	< 1.0	< 0.3	< 1.0	< 0.3
SULPHUR ION (mg S/l)	ND	ND	ND	ND	ND	ND
AMMONIUM ION (mg NH_4/l)	< 0.5	< 0.5	< 1.0	< 0.2	< 1.0	< 0.2
SILICA IN ION (SiO2 SiO_2) (mg SiO/l)	< 50	< 50	< 50	< 30	< 50	< 30
FREE CARBONIC ACID (mg HCO_3/l)	< 10	–	–	–	–	–
TURBIDITY (NTU)	–	< 10	–	–	< 20	< 5
SUSPENDED SOLIDS (mg/l)	–	< 10	–	–	< 20	< 5
BOD (PPM)	–	<100	–	–	–	< 100
COD (PPM)	–	<100	–	–	–	< 100

GATE VALVE (OPEN)
GATE VALVE (CLOSE)
GLOBE VALVE (OPEN)
GLOBE VALVE (CLOSE)
NON RETURN VALVE
3 WAY VALVE (CLOSE TO BYPASS)
BUTTERFLY VALVE (OPEN)
BUTTERFLY VALVE (CLOSE)
COCK
AIR FILTER REGULATOR
PNEUMATIC CONNERTER
PUMP
MOTOR
BALANCE VALVE
THERMOSTAT
PNEUMATIC LINE
"Y" STRAINER

P – PRESSURE
T – TEMPERATURE
F – FLOW
I – INDICATOR
R – RECORDER
L – LEVEL
M – METER
L – LOW
S – SWITCH

CLIENT SCOPE
THERMAX SCOPE

TE – TEMPERATURE ELEMENT
TC – TEMPERATURE CONTROLLER
CONTROL VALVE
BUTTERFLY ON-OFF VALVE(CLOSE)

ALT. NO.	ALTERATION	MADE BY DATE	APPROV DATE
4	MARKED NO. 13 & 14 NOTE ADDED	Suresh 07.03.08	J.S.M. 07.03.08
3	DESIGN PRESSURE IN HOT WATER CIRCUIT UPDATED.	S.V.J. 24.07.07	J.S.M. 24.07.07

CLIENT:–
PRODUCT:– VAPOUR ABSORPTION CHILLER
TITLE
SINGLE EFFECT LOW TEMP. HOT WATER FIRED CHILLER
P AND I DIAGRAM
FOR CHW TEMP. ABOVE 4.5° C

THERMAX LIMITED.
ABSORPTION COOLING DIVISION,
CHINCHWAD, PUNE-411 019.

SCALE
DESIGNED R.S.
DWN./TRCD. MANOH
CHECKED R.S.
APPROVED R.N.
REPLACED BY R.N.
PART NO. FILE NAME:–C109PEHL21
DRG. NO. C10 9PE HL21
ALT. NO. 4

IF IN DOUBT ASK
ALL DIMENSIONS ARE IN INCHES
DO NOT SCALE

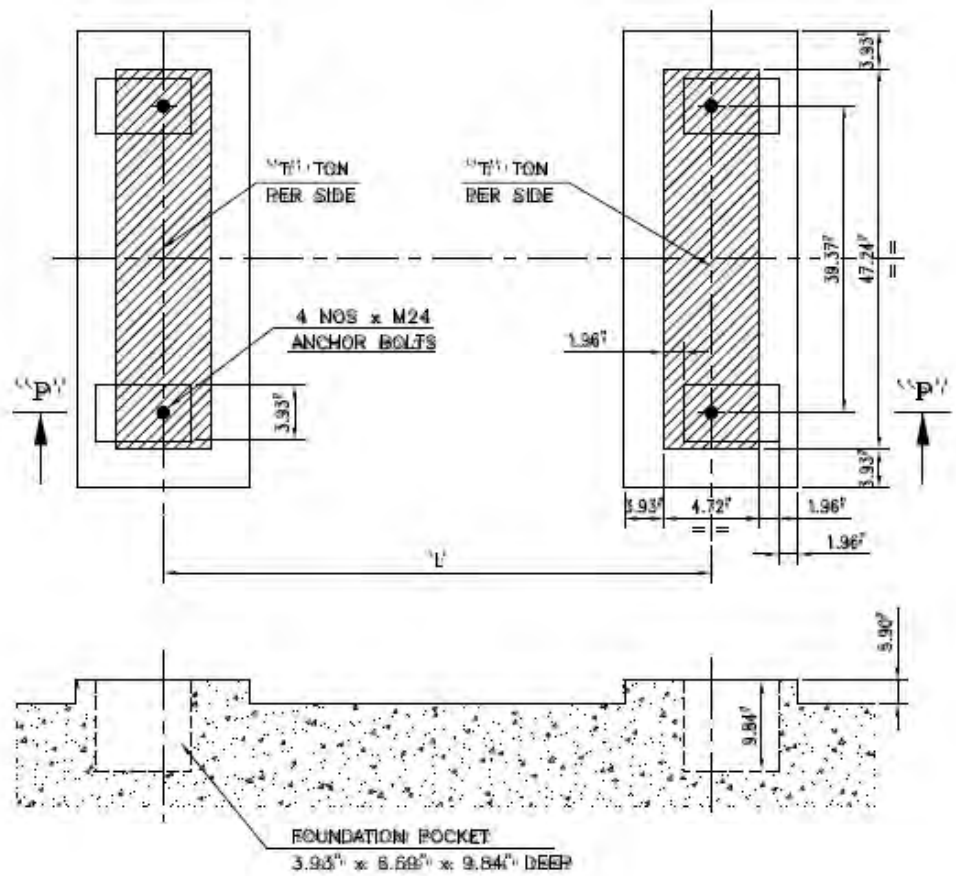

SECTION "P – P"

MODEL	"L" Inch	"T" TON(1000 Kgs)
LT6 C	76.6	2.5
LT8 C	76.6	2.6
LT10 C	116.8	3.0
LT12 C	116.8	3.2
LT14 C	140.7	3.5
LT16 C	140.7	3.6
LT18 C	180	4.1
LT21 C	180	4.3

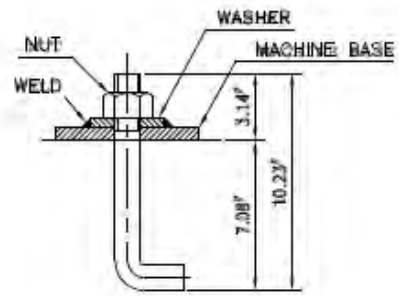

ARRANGEMENT AT ANCHOR

INDICATES THE BASE OF MACHINE

Note:-
The above drawing indicates the dimensions of the equipment base frame and foundation bolt pockets and suggested size of the footings. The foundation shall be designed to suit the soil conditions and other design considerations at site.

ALT No	ALTERATION	MADE BY	APPD BY	CLIENT / PROJECT / CONTRACTOR -- / CONSULTANT'S DRG.NO.	SCALE NTS	DES S.A.A. / DRN NAGESH / CHK S.A.A. / APD N.M.	05.04.06

THERMAX LIMITED.
ABSORPTION COOLING DIVISION,
CHINCHWAD PUNE – 411 019.
PHONE : +91-20-747 5941

TITLE FOUNDATION DETAILS
PRODUCT LT SERIES
DRG.No. C10 9FD HL21
ALT 0
FILE NAME –C109FDHL21_0

FLD = Furnished by Trane U.S. Inc. / Installed by Others
Equipment Submittal
Page 6 of 146

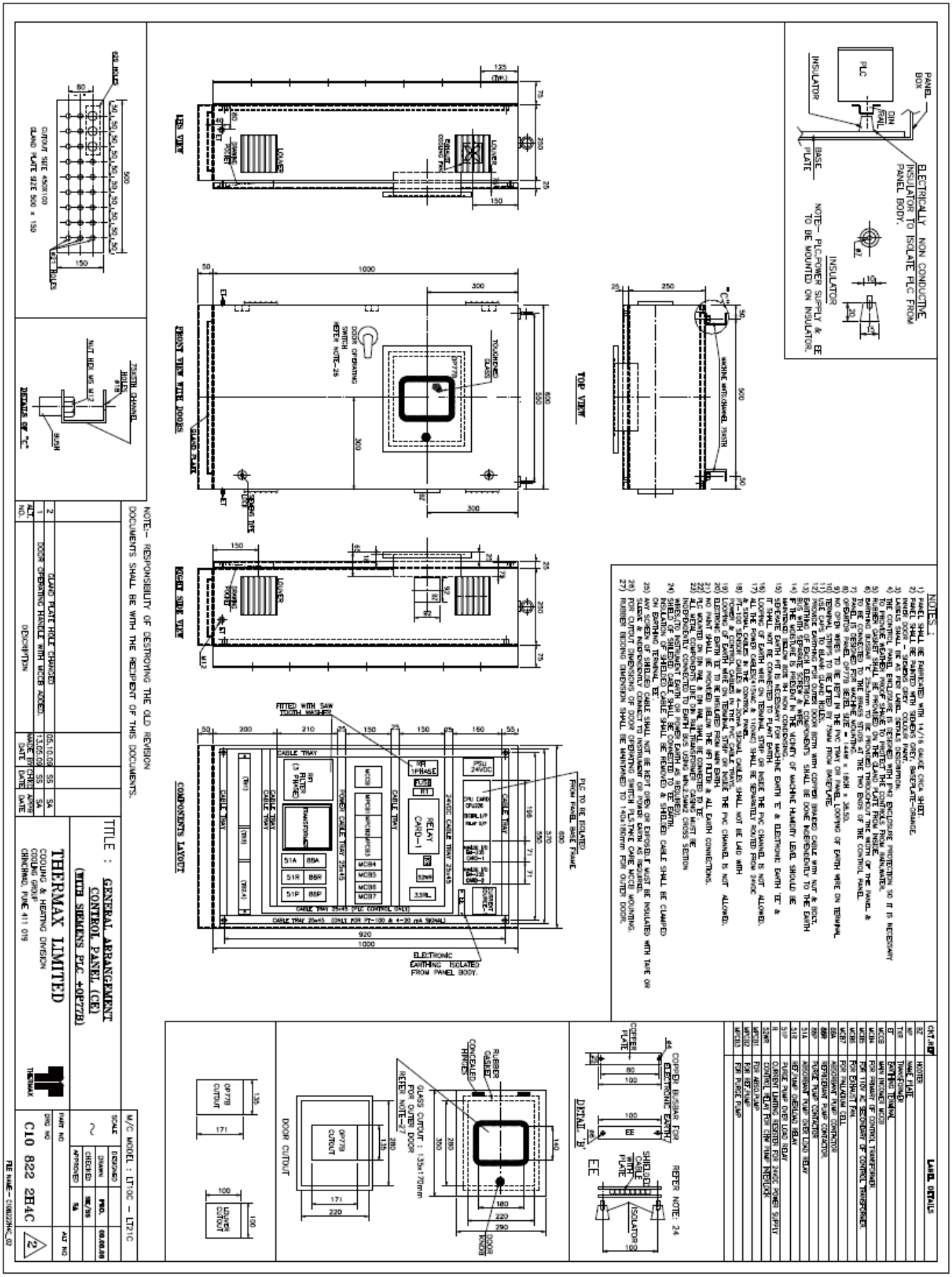
TITLE : GENERAL ARRANGEMENT CONTROL PANEL (CE)
(WITH SIEMENS PLC +OP77B)
THERMAX LIMITED
COOLING & HEATING DIVISION
COOLING GROUP
CHINCHWAD, PUNE 411 019
M/C MODEL : LT10C – LT21C
C10 822 2H4C
NOTE:– RESPONSIBILITY OF DESTROYING THE OLD REVISION DOCUMENTS SHALL BE WITH THE RECIPIENT OF THIS DOCUMENTS.
LEG VIEW
FRONT VIEW WITH DOORS
TOP VIEW
RIGHT SIDE VIEW
COMPONENTS LAYOUT
DOOR CUTOUT
DETAIL 'B'
LABEL DETAILS
NOTES:

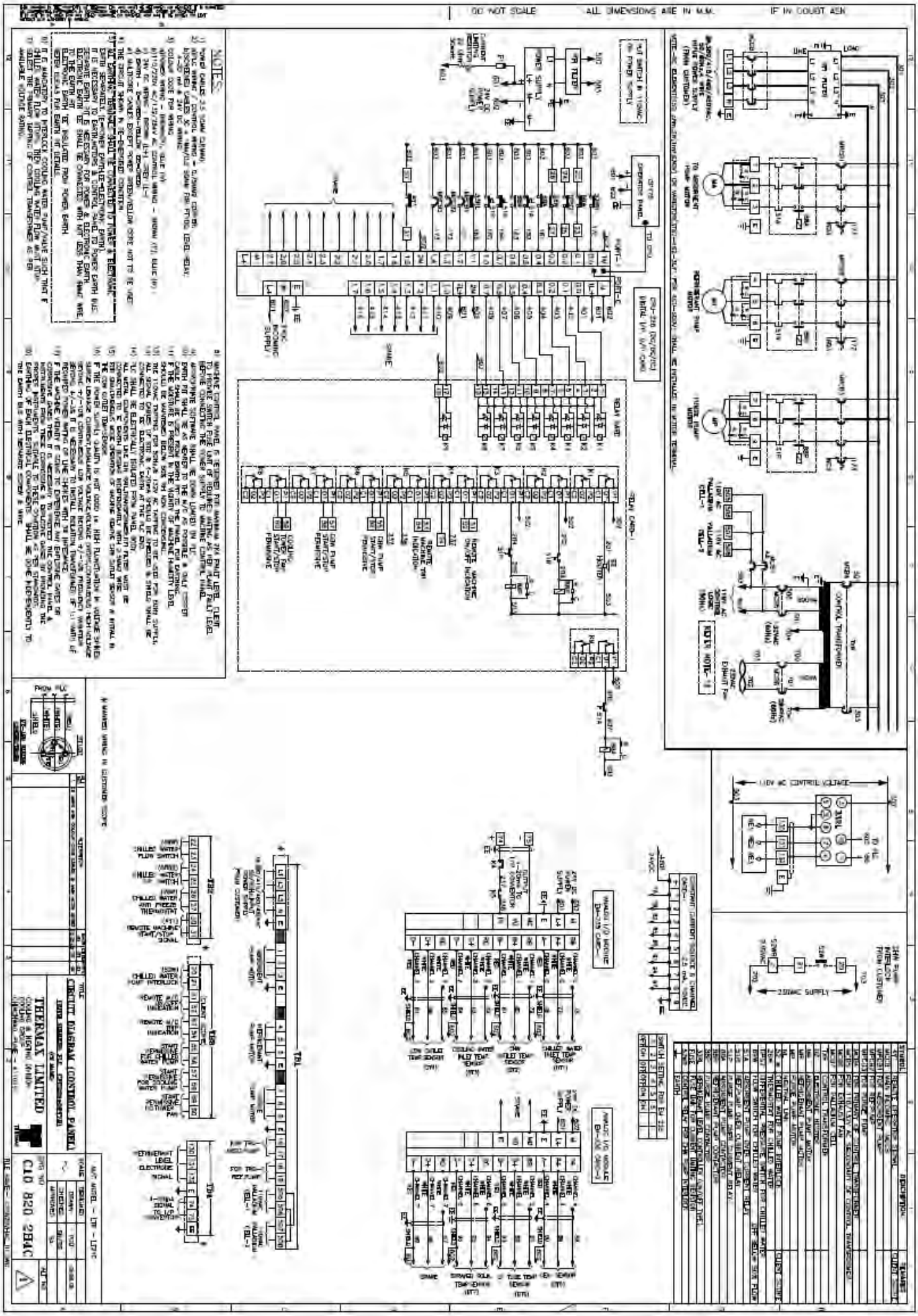
DO NOT SCALE
ALL DIMENSIONS ARE IN M.M.
IF IN DOUBT ASK
NOTES
THERMAX LIMITED
CIRCUIT DIAGRAM (CONTROL PANEL)
CLO 820 284C

Others

Technical Checklist

LT Hotwater Fired Single Effect VAM

Absorption Cooling Division
Thermax Limited, Pune 19

OC Number				Date	5/18/2011
Model	LT 10C			Quantity	1
Type	LTHW			Delivery	
Customer Name	Trane a/c SMUD				
Operating Parameters					
Parameters	Mode A	Mode B		Units	Remarks
CHILLED WATER CIRCUIT					
Capacity	120			TR	
Tolerance	3			%	± 3% (Specify if different)
Inlet Temp	57F	13.89		°C	
Outlet Temp	42F	5.5		°C	3.5°C min at Test bay
Flow Rate	191 GPM	43.38		m³/hr	380 m³/hr Max. at Test bay
Fouling factor	0.0001	0.00002		Metric	Specify if Non Standard
No. of passes	2				Specify if committed
Friction loss	5.6 'WC	1.71		mWC	Specify if committed
Pressure drop				mWC	Specify if committed
Max All Working Pr.	150 psig	10.54		kg/cm²(g)	Standard 8 kg/cm²(g)
COOLING WATER CIRCUIT					
Inlet Temp	80 F	26.67		°C	29°C min at Test bay
Outlet Temp	91.4 F	33		°C	
Flow Rate	600 GPM	136.28		m³/hr	950 m³/hr Max. at Test bay
Fouling factor	0.00025	0.00005		Metric	Specify if Non Standard
No. of passes	2/1				Specify if committed
Friction loss	24.3' WC	7.4		mWC	Specify if committed
Pressure drop				mWC	Specify if committed
Max All Working Pr.	150 psig	10.54		kg/cm²(g)	Standard 8 kg/cm²(g)
HOT WATER CIRCUIT (Low Temperature Circuit)					
Inlet Temp	207.5 F	97.5		°C	98°C max at Test bay
Outlet Temp	183.2F	84		°C	
Flow Rate	168 GPM	38.16		m³/hr	100 m³/hr Max at Test bay
Fouling factor	0.0001	0.00002		Metric	Specify if Non Standard
No. of passes	8				Specify if committed
Friction loss	29.5' WC			mWC	Specify if committed
Pressure drop	4.1' WC	8.99		mWC	Specify if committed
Max All Working Pr.	150 psig	10.54		kg/cm²(g)	Standard 5 kg/cm²(g)
ELECTRICAL CIRCUIT					
Power Supply	460/60/3, 3W				Std - 415V,50Hz;3ph (Specify if different)
Tolerance	Standard				Std - ±10%V & ±5%Hz (Specify if different)
Control supply	Not mentioned				Std - 110V & 230V;1ph (Specify if different)
Power Consumption		6.9		kVA	Specify if committed
Area Classification	Standard				Standard - Safe; Specify Zone if Hazardous
TUBE DETAILS					
Heat Exchanger		Standard			
	Domestic	Export	Type	Specify	Specify if Non Standard MOC/Thk/Type
Evaporator	Cu	Cu	Plain	Std/Non-Std	Cu finned 0.028" thk
Absorber	CuNi 95:5	Cu	Plain	Std/Non-Std	Cu Mini finned 0.028" thk
Condenser	CuNi 95:5	Cu	Plain	Std/Non-Std	Cu finned 0.028" thk
Generator	Cu	Cu	Mini Finned	Std/Non-Std	Cu-Ni 90:10 minifinned, 0.035" tl
LTHE	SS 316	SS 316	PHE	Std/Non-Std	Standard

Technical Checklist
LT Hotwater Fired Single Effect VAM

Absorption Cooling Division
Thermax Limited, Pune 19

3 - WAY CONTROL VALVES (Strike out if not in scope)		
Size	UL listed, by TZL; mixing configuration	Standard with Linear Trim
Make		Standard - Samson; Specify if others
Type	Electrical 3-way type	Standard - Pneumatic; Specify if others
CONTROL PANEL	Standard, MODBUS RTU control interface	Standard - Siemens PLC(CPU 226) + OP7 Specify for other config., make, connectivity reqmts etc.
STANDARD MARKING	ETL CHILLER	Specify If CE / ETL Required
INVERTER CONTROL	Not required	Specify If Required
INSTRUMENT MAKE	Standard	Specify complete details for Non Standard Requirements
ADDITIONAL SCOPE		
Insulation of Machine	Factory installed cold and hot insulation**	Specify Cold/Hot, at site or Factory insulated
Counter flange	Required	Specify If Required
INSPECTION REQUIREMENTS		
Visual Inspection of finished Unit	**Test Certificate required**	Specify If required by Client / Third Party
Stage Inspection	**Test Certificate required**	Mention Stages required
Material Identification	**Test Certificate required**	Specify If required by Client / Third Party
Assembly Inspection	**Test Certificate required**	Specify If required by Client / Third Party
Nitrogen Test	**Test Certificate required**	Specify If required by Client / Third Party
Helium Test	**Test Certificate required**	Specify If required by Client / Third Party
Performance Test	**Not required**	Specify If required by Client / Third Party
WATER QUALITY (Tick Appropriately)		
Water Quality	Std / Non - Std	Accepted / Not Accepted / Assumed as accepted
Sample drawn	Yes / No	Analysis Enclosed / Not enclosed

Testing Parameters (Strike out if same as Operating Parameters)

Parameters	Mode A	Mode B		Units	Remarks
CHILLED WATER CIRCUIT					
Capacity				TR	
Tolerance				%	
Inlet Temp				°C	3.5°C min
Outlet Temp				°C	
Flow Rate				m³/hr	380 m³/hr Max.
Friction loss				mWC	Specify if committed
Pressure drop				mWC	Specify if committed
COOLING WATER CIRCUIT					
Inlet Temp				°C	29°C min
Outlet Temp				°C	
Flow Rate				m³/hr	950 m³/hr Max.
Friction loss				mWC	Specify if committed
Pressure drop				mWC	Specify if committed
HOT WATER CIRCUIT (Low Temperature Circuit)					
Inlet Temp				°C	98°C max
Outlet Temp				°C	
Flow Rate				m³/hr	100 m³/hr Max
Friction loss				mWC	Specify if committed
Pressure drop				mWC	Specify if committed

Technical Checklist
LT Hotwater Fired Single Effect VAM

Absorption Cooling Division
Thermax Limited, Pune 19

SUBMISSIONS			
Document	Date	Document	Date
Final GA	11-Dec	Foundation	11-Dec
HW Valve submittal	11-Dec	Ext P&I	11-Dec
O&M Manual	11-Dec	Modbus address list	11-Dec
Wiring diagram	11-Dec	Control Panel GA	11-Dec

ENCLOSURES			
		Document	Mention Yes/No, If No give details
LOI Copy	Yes / No	Final Offer Copy	Yes / No
PO Copy	Yes / No	Selection Copy	Yes / No
All references, Cross references, Correspondences mentioned in the PO			Yes / No
If the order is for VAHP, are Heating Mode Specs included in the PO			Yes / No

Elaborate on things mentioned in the PO/LOI which are not agreed, Verbal commitments not mentioned in any douments above, Deviations not accepted?

LOW SIDE		
Does the order include Low side		If Yes, then give details
	Final Offer copy of Low Side is enclosed	

Give the complete scope of work for Lowside from Design Basis, Inspection requirements, Supply and Erection and Commissioning

OTHER COMMENTS / NON - STANDARD REQUIREMENTS / LOW SIDE REQUIREMENTS

1. Autopuring required
2. Single point disconnect switch
3. SS Ref pan
4. EEPROM
5. Cooling water flow switch
6. Generator pr. switch
7. Remote set point
8. Containerization of the chiller for outdoor installation. Please see the attached file for weather inforation at site location
9. **: Complete chiller to be insulated

Sales Engineer	Business Manager
Tech.Serv.Co-ordinator	HO Proposal

Cogenie

THERMAX

LOW TEMPERATURE HOT WATER FIRED ABSORPTION CHILLERS

THE LATEST ENERGY EFFICIENT Cogenie SERIES

Hot Water Driven Vapor Absorption Machine

Cogenie ProChill™

THE ECO-FRIENDLY SOLUTION –

FOR AIR CONDITIONING AND INDUSTRIAL COOLING

Table of Contents

S.No	CONTENTS	PAGE No.
I	SPECIFICATIONS FOR VAPOUR ABSORPTION CHILLER	4
II	SCOPE OF SUPPLY	5
III	THERMAX BATTERY LIMITS	7
IV	SCOPE OF SUPPLY OF THE PURCHASER	8
V	STANDARD MAKES OF INSTRUMENTS & COMPONENTS	9
VI	PERFORMANCE CRITERIA AT SITE	10
VII	SITE TEST & STANDARD WATER QUALITY	10
VIII	CYCLE OF OPERATION	11
IX	MATERIALS OF CONSTRUCTION	16
X	QUANTITIES OF LIQUIDS	17
XI	FEATURES IN SIEMENS PLC PANEL FOR VAC	18
XII	HANDLING, STORAGE & SAFETY METHODS OF LIBR	20
XIII	PAINTING PROCESS FOR CHILLER	22
XIV	DELIVERY DISCLAIMER	26

Cogenie

THERMAX

I. Specification for Vapor Absorption Chiller

	DESCRIPTION	UNITS	VALUE
	Chiller Model		**LT 10C**
	Cooling Capacity (±3%)	**TR**	**120**
		BTU/hr	**1439923**
A	**CHILLED WATER CIRCUIT:**		
1.	Chilled Water Inlet Temperature	°F	57.0
2.	Chilled Water Outlet Temperature	°F	42.0
3.	Chilled Water Flow Rate	GPM	191.0
4.	Passes in Evaporator	Nos.	2.0
5.	Chilled Water Circuit Friction Loss	ft WC	5.6
6.	Glycol in Chilled Water		NA
7.	Concentration of Glycol	%	0
8.	Fouling Factor	ft² hr °F/BTU	0.0001
9.	Connection Diameter (Indicative)	Inches	6.0
1(	Maximum Working Pressure	PSI g	150.0
B	**COOLING WATER CIRCUIT:**		
1.	Heat Rejected	MBH	3409.0
2.	Cooling Water Inlet Temperature	°F	80.0
3.	Cooling Water Outlet Temperature	°F	91.4
4.	Cooling Water Flow Rate	GPM	600.0
5.	Cooling Water Bypass Flow	GPM	0
6.	Passes in Absorber / Condenser	Nos.	2 / 1
7.	Cooling Water Circuit Friction Loss	ft WC	24.3
8.	Glycol in Cooling Water		NA
9.	Concentration of Glycol	%	0
1(	Fouling Factor	ft² hr °F/BTU	0.00025
1	Connection Diameter (Indicative)	Inches	6.0
1	Maximum Working Pressure	PSI g	150.0
C	**LT HOT WATER CIRCUIT:**		
1.	Heat Input	MBH	1969.0
2.	Hot Water Inlet Temperature	°F	207.5
3.	Hot Water Outlet Temperature	°F	183.2
4.	Hot Water Flow Rate	GPM	168.0
5.	Passes in Hot Water	Nos.	8.0
6.	Hot Water Circuit Friction Loss	ft WC	29.5
7.	Glycol in Hot Water		NA
8.	Concentration of Glycol	%	0
9.	Fouling Factor	ft² hr °F/BTU	0.0001
1(	Connection Diameter (Indicative)	Inches	3.2
1	Maximum Working Pressure	PSI g	150.0
D	**ELECTRICAL DATA:**		
	Power Supply (3 Phase + N)	V, Hz	460 (±10%) 60 (±5%)

Cogenie

THERMAX

	Absorbent pump - 1	kW(A)	1.5 (5.0)
	Refrigerant pump	kW(A)	0.3 (1.4)
	Vacuum pump	kW(A)	0.75 (1.8)
	Power consumption	kVA	6.9
E	**PHYSICAL DATA (APPROXIMATE, ±10%):**		
1.	Length	Inches	161.0
2.	Width	Inches	59.0
3.	Height	Inches	99.0
4.	Dry Weight	lbs	9921.0
5.	Operating Weight	lbs	13228.0
F	**TUBE METALLURGY:**		
1.	Evaporator		Copper finned
2.	Absorber		Copper minifinned
3.	Condenser		Copper finned
4.	Hot Water Generator		CuNi (90:10) minifinned

Note:
1. This Selection is valid for Insulated Chiller only.
2. For Non-Insulated Chiller, the Capacity & Heat Source Consumption will vary.
3. Plant room temperature should be from +5°C to +45°C (41°F to 113°F).
4. Please contact Thermax representative/office for Customized Specifications.
5. This selection is as per ARI 560 – 2000.

Cogenie

THERMAX

II. Scope of Supply of Single Effect Low temperature hot water Fired Vapour Absorption Chiller

1. **LOWER SHELL**
   - Evaporator
   - Gravity feed tray arrangement
   - Base
   - Absorber
   - Eliminators
   - Refrigerant level control

2. **UPPER SHELL**
   - Generator
   - Condenser
   - Eliminator

3. **REGENERATIVE HEAT EXCHANGERS**
   - Set of Low temperature heat exchanger

4. **PUMPS**
   - Absorbent pump set with isolating valves
   - Refrigerant pump set with isolating valves

5. **PURGE RECOVERY DEVICE**
   - Storage tank
   - Air separation device
   - Ejector device
   - Liquid trap
   - Piping and various valves

6. **PIPING AND INTERCONNECTING WIRING**
   - Refrigerant and absorbent piping
   - Internal power and control wiring

7. **VACUUM PUMP SET**

8. **CONTROL PANEL:**

- Panel unit
  Operator Terminal having Keypad facility for sequential operation of the unit.

- The following keys will be provided -
  a) Machine start/stop
  b) Vacuum pump start/stop
  c) Refrigerant pump start/stop
  d) Refrigerant pump auto/manual selector
  e) Hot water control valve auto/manual selector
  f) Set point local/remote
  g) Machine local/remote
  h) Cooling/simultaneous mode selector
  i) Alarm acknowledge/re-set

Cogenie

THERMAX

The following displays will be provided –

- Display of Chilled and Cooling water inlet temperatures, Generator outlet temperature and other heat exchanger temperatures for machine operation
- Display of chilled water set point entries and entries of safety set points, PID settings etc.
- Display of alarm messages for abnormal conditions
- Potential free contacts for machine run and trip indications
- Main circuit breaker
- Micro-processor based PLC (Programmable Logic Controller) including PID temperature control and high temperature cut-out for Generator
- Alarm buzzer
- Level relay for Evaporator and Generator
- Transformer
- Terminal strip

10. LOCALLY MOUNTED CONTROLS AND INSTRUMENTS:

- Electrical 3-way Hot water flow control valve
- Chilled water flow switch
- Chilled water DP (differential pressure) switch
- Temperature sensors (RTD type)
- Level electrodes for sensing level at Evaporator and generator
- Mercury Manometer

11. INITIAL CHARGE:

- Lithium Bromide duly inhibited 1 Lot
- Refrigerant water with octyl alcohol 1 Lot

12. PAINTING

- Main Unit : Rust Preventive Paint
- Control Panel : Finish Paint

13. PACKING - THERMAX standard packing

14. TECHNICAL - Instruction and service manual (Operation & Maintenance)

Cogenie

THERMAX

III. Thermax Battery Limits

Hot water	-	At Inlet nozzle flanges of generator box
	-	At Outlet nozzle flange of generator box
	-	Inlet/Outlet/Bypass flanges of flow control valve
Chilled water	-	At Inlet nozzle flanges of evaporator water box
	-	At Outlet nozzle flange of evaporator water box
Cooling water	-	At Inlet nozzle flange of absorber water box
	-	At Outlet nozzle flange of condenser water box
Power	-	Terminal connections on control panel
Earthing	-	Terminal connections on control panel Note: Separate instrumentation earthing for PLC panel
Instrument air	-	Instrument air tapping of the control valve assembly

Cogenie

THERMAX

IV. Scope of Supply of the Purchaser

- Unloading, transportation & insurance after F.O.B. BOMBAY
- Building and civil foundations
- Chilled water, Hot water and cooling water piping work including various safety valves, globe valves, isolating valves etc.
- Insulation of machine and piping
- Electrically/pneumatically operated cooling water on/off valve if cooling water Pump is not used exclusively for Absorption machine
- Low cooling water temperature, cooling tower fan cutout switch
- Various temperature / pressure gauges for water lines
- Cooling tower and water pumps
- External wiring for interlocks with cooling, chilled water pumps
- Rated power supply to control panel
- Dry, oil free, & dirt free air supply for control valve
- Hot, cooling, chilled water supply at rated conditions
- Soft water make up for hot, cooling & chilled water at respective pressure & quality
- Nitrogen gas for pressure testing
- Finish painting of the machine
- Cooling water flow switch / DP Switch
- Hot water pumps including check valves, strainers, isolation and flow control valves, hot water expansion tank, piping expansion joints, piping fittings etc, as per standard engineering practices / system P & I.
- Pressure relief safety valve.
- Hot water pressure, temperature and flow measurement instruments
- Intermediate heat recovery PHE, if demanded by process/Engine OEM (applicable only for engine jacket water heat recovery).
- Additional TCV (Thermostatic Temperature Control Valve with PID controller) for engine return water temperature control, for diverting water engine cooling system. (applicable only for engine jacket water heat recovery).
- Any other item not specifically mentioned in the scope of supply

Cogenie

THERMAX

V. Standard Makes of Instruments &Components

Programmable Logic Controller (PLC)	: Siemens
Operator Interface	: Siemens
Level Relay	: Omron, Japan
Level Electrodes	: Omron, Japan
Flow Switch	: Saginomiya, Japan
Differential Pressure Switch	: Switzer, India
PT-100 Sensors (RTD type)	: Nutech, India
Diaphragm valve	: Saunders
Manometer	: Technoflow
Vacuum Pump	: Indowoosung
Solution & Refrigerant pumps	: Teikoku Electric, / Chunin
Hot water control valve	: SAMSON

Note – If due to some unforeseen situation, it is not possible to use these makes, Thermax may choose other equivalent makes.

Cogenie

THERMAX

VI. Performance Criteria at Site

The following inputs to be provided by the purchaser.

A) Steady load

B) Inlet parameters:

I) Cooling water inlet temperature not above rated conditions but above 50 Deg. F.
ii) Chilled water inlet temperature not below rated temperature
iii) Chilled water & cooling water as per specifications mentioned. Alternatively, Thermax approval for water quality at site
iv) Water flow rates:
Chilled water within ±5% of rated flow. Cooling water within +5% -0% of rated flow
v) Heat source (i.e. Hot water) at rated flow rate and rated condition (Temperature and Pressure) Tolerance allowed is ± 5%

VII. Site Test and Standard Water Quality

SITE TEST:

Performance trials will be carried out within 15 days of commissioning the machine, at available load. In case load or rated utilities are not available, the unit will be deemed as handed over after performance trials are taken on available parameters.

STANDARD WATER QUALITY for Copper Tubes:

ITEM	UNITS	COOLING WATER	CHILLED WATER	MAKE-UP WATER
PH at 77 Deg F		6.5 - 8.5	6.5 - 8.5	6.5 - 8.5
Electrical conductivity	µs/cm	800 Max.	500 Max.	200 Max
M Alkalinity	ppm	100 Max.	100 Max.	50 Max
Total hardness	mg CaCO3/l	200 Max.	100 Max.	50 Max
Chloride ion	mg Cl/l	200 Max.	100 Max.	50 Max
Sulfate ion	mg SO4/l	200 Max.	100 Max.	50 Max
Total Iron	mg Fe/l	1.0 Max.	1.0 Max.	0.3 Max
Sulfide ion	mg S/l		Not detected	
Ammonium ion	mg NH4/l	1.0 Max.	0.5 Max.	0.2 Max
Silica in ion state	mg SiO2/l	50 Max.	50 Max.	30 Max
Free carbonic acid	mg CaCO3/l	--	10 Max.	10 Max.

VIII. Cycle of Operation

What is Refrigeration?

Refrigeration is defined as the process of extracting heat from a low temperature medium and transferring it to a high temperature heat sink. Refrigeration maintains the temperatures of the heat source below that of its surroundings while transferring the extracted heat to a heat sink.

Basic Principles

The boiling point of water is directly proportional to pressure. At atmospheric pressure water boils at 212°F. At lower pressure it boils at lower temperature. At 0.2366 inches Hg absolute pressure the boiling point of water is 38.66°F.

To change water from liquid to vapour it has to be heated. The water absorbs the heat and its temperature starts rising. However it rises until it reaches a point where the temperature stays constant and it starts boiling i.e. the liquid water vaporizes. This point it called the boiling point. At this point all the heat being absorbed by the water does not change its temperature but only its phase. This heat required to change the phase of a liquid to vapour is called the Latent of Vaporization. Similarly the heat rejected by a vapour when it condenses is called the Latent Heat of Condensation.

Lithium Bromide (LiBr) is a chemical similar to common salt (NaCl). LiBr is soluble in water. The LiBr water solution has a property to absorb water due to its chemical affinity. As the concentration of LiBr solution increases, its affinity towards water increases. Also as the temperature of LiBr solution decreases, its affinity to water increases.

Further there is a large difference between vapour pressure of LiBr and water. This means that if we heat the LiBr water solution, the water will vaporize but the LiBr will stay in the solution and become concentrated.

Absorption Cycle overview

Absorption systems use heat energy to produce a refrigerating effect. In these systems the refrigerant, i.e. water, absorbs heat at a low temperature and pressure during evaporation and releases heat at a high temperature and pressure during condensation.
A solution known as absorbent i.e. Lithium Bromide (LiBr) is used to absorb the vaporized refrigerant (after its evaporation at low pressure). This solution, containing the absorbed vapour is heated at a higher pressure. The refrigerant vaporizes and the solution is restored to its original concentration for re-use.

Cogenie

THERMAX

Cooling Mode - Schematic Diagram

A schematic diagram of the absorption cycle in the Cooling Mode is shown below.

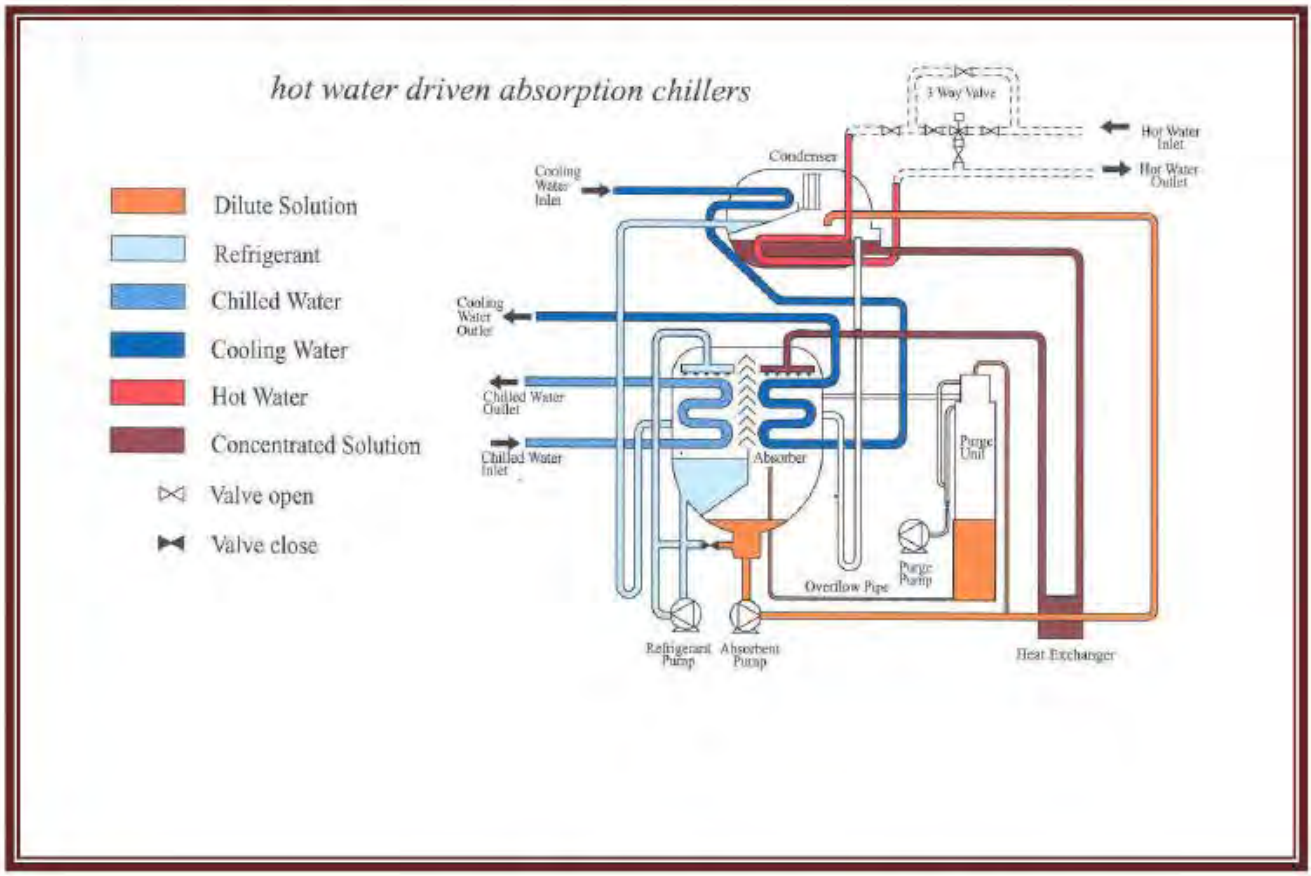

When the refrigerant undergoes a series of evaporation, absorption, pressurization, vaporization, condensation, throttling and expansion processes, absorbing heat from a low temperature heat source and releasing it to a high temperature sink so that its state is restored to its original one, it is said to have completed a refrigerating cycle.

Cogenie

THERMAX

Individual Parts

The various parts of the absorption machine are described below.

Evaporator

Evaporator consists of a tube bundle, an outer shell, distribution trays, and a refrigerant pan. A refrigerant pump circulates the refrigerant from the refrigerant pan into the distribution trays. From the trays the refrigerant falls on the evaporator tubes. The shell pressure is very low (≈0.2366 inches Hg). At this pressure the refrigerant evaporates at a low temperature and extracts latent heat of evaporation from the water being circulated through the evaporator tubes. Thus the heat is extracted from the water being circulated through the tubes and chilled water leaves the machine for process applications.

Absorber

Absorber consists of a tube bundle, an outer shell , distribution trays, and an absorbent collection sump. Concentrated absorbent solution from the High pressure generator is fed into the distribution trays. This solution falls on the low pressure absorber tubes. The vapourised refrigerant from the low pressure evaporator section is absorbed in this solution spray. Due to this absorption the vacuum in the shell is maintained at a low pressure, and ensures the heat extraction from the heat source water. The concentrated absorbent becomes diluted. The 'Heat of Dilution' generated during absorption is rejected in the cooling water flowing through the tubes. The diluted absorbent gets collected in the bottom of the shell.

Generator and Condenser

The Generator and Condenser tube bundles are enclosed in a shell and are separated by an insulation plate. Hot water at the rated inlet conditions first passes through the tubes of the high pressure generator. Here it heats up the dilute solution coming from Low pressure absorber. Due to boiling, the refrigerant vapours are generated. The vapours flow into the condenser side via the eliminators. In the condenser they get condensed in the shell side because of the cooling water flowing through the tubes. The condensed refrigerant gets collected in the bottom of the condenser. The absorbent, which has become concentrated in the high pressure generator drains to the low pressure absorber to begin a new absorbent cycle.

Cogenie

THERMAX

IX. Materials of Construction

1] Lower Shell

ITEM	MATERIAL
Shell	IS 2062 Gr B or equivalent
Tube Plate	IS 2062 Gr B or equivalent
Baffle	IS 2062 Gr B
Eliminator	SS 430
Tray	SS 430
Evaporator Tubes	DLP Grade Copper (Enhanced) 0.63 inches OD , 0.0224 inches(bare tube)thk (for models 100 – 500 NTR) 0.748 inches OD , 0.0224) inches(bare tube thk (for models 550 – 1400 NTR)
Absorber Tubes	DLP Grade Copper (Enhanced) 0.63 inches OD , 0.0256 inches(bare tube)thk (for models 100 – 500 NTR) 0.748 inches OD , 0.0256 inches(bare tube) thk (for models 550 – 1400 NTR)

2] Upper Shell

ITEM	MATERIAL
Shell	IS 2062 Gr B or equivalent
Tube Plate	IS 2062 Gr B or equivalent
Baffle	IS 2062 Gr B
Eliminator	SS 430
Low Generator Tubes	DLP Grade Copper (Enhanced) 0.63 inches OD , 0.0276 inches(bare tube)thk (for models 100 – 1400 NTR)
Condenser Tubes	DLP Grade Copper (Plain) 0.63 inches OD , 0.0224 inches thk (for models 100 – 500 NTR) 0.748 inches OD , 0.0224 inches thk (for models 550 – 1400 NTR)

Cogenie

THERMAX

3] **Heat Exchanger**: (LTHE)

ITEM	MATERIAL
Type	Plate type Heat Exchanger
M.O.C	SS plates with Copper brazing

4] **Nozzle Flange Ratings:**

Chilled Water	-	ANSI B 16.5 CLASS 150
Cooling Water	-	ANSI B 16.5 CLASS 150
Hot Water Inlet	-	ANSI B 16.5 CLASS 150
Hot Water Outlet	-	ANSI B 16.5 CLASS 150

5] **Insulation Details:**

Insulation of the machine is not in standard scope. May be offered at extra price.

Suggested Material:

Hot Insulation - Mineral Wool
2.953 inches thk in Generator
1.968 inches thk in Heat Exchanger
OR
EPDM Rubber foam insulation material 3/4" thick

Cold Insulation - Nitrile Rubber foam insulation material 3/4" thick

X. Quantities of Liquids

ITEM	DESCRIPTION	QUANTITY
Absorbent/solution	55% Aqueous LiBr	1 LOT
Refrigerant	Water	1 LOT
Inhibitor	Lithium molybdate	1 LOT
Heat transfer additives	Octyl Alcohol	1 LOT

XI. Features in Siemens PLC Panel for Vapor Absorption Chiller

1. Very powerful PLC micro-processor capable of handling maximum of 256 inputs & outputs 4 x 20 character display as standard & touch screen Graphic. Display as optional at extra cost.
2. 4 Function keys for each screen.
3. Numeric keypad for entering set points, values etc.
4. Arrow keys for navigation within a screen.
5. Online date & time adjustment for the real time clock.
6. Status display of all functions on the machine.
7. Display of alarm messages.
8. Powerful alarm detection. Almost all-possible abnormal conditions are detected & displayed. It even detects if the contractor coil is burnt / open.
9. Various set points facility to tune the machine according to all possible load / site conditions.
10. Definite ranges for each & every set point to prevent entry of out of range values beyond machines safe performance limits.
11. Onscreen display of all the logged data during any stage of operation.
12. Auto-detection of sensor error, sensor open or sensor short circuit.
13. Password protection for critical operations & set points to prevent unauthorized access.
14. PID temperature control loops for chilled water temperature control with facility to customize the PID parameters according to the load & site conditions.
15. Low cost remote operatability can be easily achieved using hardwired standard potential (voltage) free contacts for m/c on/off, m/c tripped, chw pump start/stop, and cow pump start/stop signals cooling tower fan start/stop.
16. PC connectivity as an option is available at an additional cost. The machine can be operated through a standard PC by using SCADA (Supervisory control & Data Acquisition) software.
17. Direct connectivity of our PLC panel with any third party system like BAS (Building Automation System), other PLC (Programmable Logic Controller), DCS (Distributed Control System) can be achieved .The third party system can share information with our panel, read temperatures, aquire status of all instruments once interfaced with our panel on Modbus_RTU protocol on RS485 network. This is an optional feature available at an additional cost.
18. The working memory (RAM) of the PLC also has a backup battery to restore & maintain the program in the RAM in the event of a power failure.
19. Information about total number of operating hours, number of m/c trips displayed on the screen.
20. The PLC is programmed to intelligently adjust machine parameters. For e.g. the machine will start closing the control valve if it finds that the chilled water outlet temperature has dropped below the Chilled water outlet temperature set point
21. A dedicated potential free contact output to start/ stop the cooling tower fan is provided to automatically maintain the cooling water inlet temperature above the trip set point.
22. PLC, Operator terminals & Drive are ETL certified. Also all major switchgear components are ETL certified.

23. Whenever the standard potential free contacts for auto start / stop of chilled water & cooling water pumps are used, the PLC automatically ensures that the cow pump stops whenever the chilled water pump stops.
24. Due to inherent PT 100 characteristic PT 100 sensors tend to develop a drift in readings over a period of time. Under such conditions the panel has a provision to correct this drift by entering the correction value.
25. The PLC also keeps a record of last six alarms along with the date & time when they occurred. This data can be viewed during any operating stage
26. In case of two or more machines supplying the same load, the machines can be networked with each other to automatically start / stop based on the actual load. This option is available at extra cost.
27. The PLC hardware used is upgradeable & expandable based on the input / output requirements
28. Unlike the custom built micro-processors where the operational sequence or program can not be altered easily, with our PLC the program can be easily modified as per certain specific requirements

XII. Handling, Storage and Safety Methods of Lithium Bromide

Properties:

LiBr is a clear liquid, which is odorless and yellow in color. It is stable at room temperature in closed containers. It gives hazardous reaction, in contact with strong Acids. It gives mild irritation to the skin, but is not considered carcinogenic. It also gives irritation to the eyes and its mist is not to be inhaled. It does not burn. In case of fire, water or dry chemical powder, foam or carbon dioxide and other extinguishers can be used.

Handling & Storage: -

LiBr has to be stored in a cool and well-ventilated location and possible contact with water is to be avoided. Special measures are not required for handling. However, while handling the chemical, exposure is to be avoided with minimum contact with skin and eye. It is not recommended to inhale LiBr smell too much. The emptied containers should be disposed of properly (as per applicable regulations).

Safety Measures: -

a] The work area should be provided with adequate local exhaust ventilation, where dust or mist may be generated. Local exhaust ventilation, confinement of the mist generation equipment and/or room ventilation system, as well as adequate engineering controls is needed, to ensure worker exposure below TLV (Threshold Limit Value for Chemical Substances in the Work Environment).

b] Number of persons exposed should be minimum.

c] Chemical goggles, rubber gloves and respiratory protection are recommended for Use.

d] Clothing should be close fitting and clean.

e] Eating, smoking and drinking are not permitted, while handling LiBr.

f] Breathing LiBr mist is prohibited.

g] A hot shower is recommended for the worker, handling the chemical, after the work shift.

h] The leaking and spilled liquid is to be collected in sealable containers as far as possible.

i] The remaining liquid has to be absorbed in dry sand or inert absorbent.

j] Washing away the chemical to sewer is not recommended.

Cogenie

THERMAX

First Aid Measures: -

a] **Eye Contact: -**

The affected eyes are to be gently rinsed with clean water for at least 15 minutes. If irritation persists, medical attention is required.

b] **Skin Contact: -**

The affected areas should be washed under running water, using mild soap. If irritation persists, medical attention is necessary.

c] **Inhalation: -**

The victim has to be removed from contamination immediately to fresh air. He/she has to be kept warm and quiet and medical attention should be provided at the earliest.

d] **Ingestion:** -

The mouth has to be rinsed with water. The victim has to try to vomit out the chemical. Medical attention should be provided as soon as possible.

XIII. Painting Process for Chiller

Background viz. Painting & the m/c.

Fundamentally any internal surface of m/c. coming in contact with LiBr / D.M. Water should be strictly paint free.

As an implication of above, a portion of external area e.g. shell cutouts will come in contact with LiBr / D.M. water because of fitting of external box during assly.
Painting of such areas & mistakes thereof can be avoided by external painting after completing sub assemblies.

"All welds / prepared edge / cutouts that are to be welded later i.e. non-structural type of welding that which will be either N_2 & He tested & / or hydro tested" are to be left unpainted in a 1" band.

As paint will contaminate tube to tube sheet expansion joint, tube plate holes & adjacent surfaces are required paint free. (Up to N_2/He test clearance stage)

PROCESS

1. WASHING
- Do washing of complete machine using power jet pump cleaner.
- Specifically tube sheet within header should be cleaned thoroughly for soap solution removal.

2. TUBE PLATE (WITHIN HEADER) & HEADER PAINTING.
- Stage: After completion of Nitrogen & Helium testing of assembled m/c.
- Since the tube plate & headers are already blasted, do manual (hand tool) surface preparation to remove all soap & rust.
- Additionally hand wire brush may be used to clean tube plate ligaments and header corners near tube plate.
- Apply I coat of G.P. 235, to unpainted areas (During this stage minimum paint should enter in tubes mouths).
- Apply II coat of G.P. 235.
- Add minimum / no thinner to get max. DFT per coat, i.e. 50 ~ 60 microns.

Note -Ensure minimum specified DFT of 100 ~ 120 microns.
-Inlet / outlet piping / nozzle connections need to be similarly cleaned prepared & painted to the extent of accessibility.

3. SURFACE PREPARATION - I

A. Pre condition of a Blasting surface preparation:
- All welding work completed (strictly no welding balance)
- Chiller Helium leak tested & Hydro/ pneumatic test duly completed.

Cogenie THERMAX

- Hydro tested header duly opened, drained, dried, gasket replaced & pneumatically tested.
- Performance test duly completed. (wherever applicable) Header opening & draining
- All sharp edges shall be ideally rounded before shot blasting to 1R or minimally at least have edges broken to avoid paint chipping & injury.

B. Blasting preparation:
- Remove the items before blasting e.g. Control panel, rupture disk, manometer assly, pressure gauge
- Do rubber wrapping of items where blasting is undesirable e.g. Service valve, Damper valve, Angle valve, Level electrode assly, Manometer assly, Pressure gauge, canned pump.
- Do masking of SS components of chiller e.g. SS headers, SS exhaust duct, SS auto purge system etc.
- Ensure always masking of clad (CuNi, Ti, SS etc…) surfaces, e.g. clad tube plates, clad headers, SS ducts etc.. (Do not blast & paint)
- Blank/ plug the openings: Cooling water in & out, Chilled water in & out, Steam in & out & drains, threaded couplings.
- Ensure that the check sheet is filled prior to send to blasting

C. Blasting:
- Do blasting to Grade: Sa 2.5
- I coat is to be done within maximum 4 hours of completion of blasting.
- Blasting in hard to reach area, need to be suitably addressed.

D. Cleaning: Do cleaning of machine to blow off any residual with the help of dry air after blasting

E. Remove masks, blanks, rubber wraps etc & again clean to blow off any residual using dry air.

4. I COAT

- Applicability: All prepared external surfaces except weld areas, tube plates & internals, with in maximum 4 hours of completion of blasting. As mentioned above.
- Name: High solids self priming epoxy coating – GP Primeguard 235
- Shade: Thermax D.A. Grey
- Application: By brush/air/airless.
- DFT: 45-55 microns
- Thinner: GP-002
- Dilution ratio: 15% by volume maximum
- Mixing ratio: Base : Hardener :: 3:1 (By volume)
- Viscosity : 80-100 seconds by Ford Cup No. 4 @86ºF
- Pot life: 2 hours at 86ºF
- Drying time: 6 – 8 hours
- Hard dry: 16 hours.
- Overcoating interval: 8 hours.
- Shelf life: 6 months.

Cogenie THERMAX

5. PUTTY CUTTING & I COAT DRESS UP

- Do putty cutting after drying 6 to 8 hours of application for P.U.Putty & 3 to 4 hrs. for N.C.Putty
- Use orbital sander, emery paper 180-220 grit size for dressing up (roughing) of I coat

6. II COAT

- Applicability: Over all external surfaces painted with I coat of GP 235.
- Name : High solids self priming epoxy coating – GP prime guard 235 (Rest details of paint as per sr. no. 4)
- DFT : 45-55 microns.

7. Use Dupont putty 749 R, after II coat & at following areas: (Note: Not to be used on pressure parts)

- Upper shell tube plate & lower shell tube plate gap on resting thickness,Saddle, skid,
- Angle, channel brackets, supports for vacuum pump,
- Instruments brackets, base frame of chiller etc.

- **Application process details:**
- Name: Filling Polyester putty
- Mixing ratio: Base (749 R) : Hardener (762 R) (2 % of hardener)
- 100 gm(Base): 2 gm (hardener) by volume.
- Over coating interval: 15 minutes
- Pot life: 8 to 10 minutes.
- Drying time: 15 to 20 minutes

8. II COAT DRESS UP

Use orbital sander, emery paper 180-220 grit size for dressing up (roughing) of II coat.

9. III COAT

- Applicability: Over all external surfaces painted with II coat of GP 235.
- Name : Aliphatic Acrylic Polyurethane GP BOND 141
- Shade / Finish : **RAL 5024 Pastel Blau** /matt finish
- Application : With conventional spray / brush touch up
- Gun pressure (at nozzle) : 40PSI
- WFT : 75 microns
- DFT : 30~35 microns
- Thinner : GP – 001
- Dilution ratio : 10 to 15 % by volume
- Over coating interval: 4 hours.
- Pot life: 6 hours at 30 degree centigrade
- Viscosity: 23 – 25 seconds by Ford Cup No. 4 @86ºF
- Touch dry : 1.5 Hrs at 77ºF
- Dry to handle : 24 Hrs
- Full cure : 7 Days
- Shelf life : 6 months

Cogenie

THERMAX

10. III COAT DRESS UP

Use orbital sander, emery paper 180-220 grit size for dressing up (roughing) of III coat.

11. IV COAT

- Applicability: Over all external surfaces painted with III coat of GP 141.
- Name : Aliphatic Acrylic Polyurethane GP BOND 141
  (Rest details of paint as per sr. no. 9)
- DFT : 30-35 microns

Note:

- Painted machine shall not be transported or handled before the paint is sufficiently dry & hardened, & damage during transport shall be avoided

XV. Delivery Disclaimer

LIMITATIONS OF DDP DELIVERY TERMS

Thermax Inc will make every attempt to deliver shipments of chillers, parts and accessories in a reasonable time frame after custom clearance procedures get over.

Thermax Inc does not accept any responsibility on account of delays in custom clearance of shipments due to external circumstances including, but not limited to intensive custom examination, port congestion, weather related issues, non availability of suitable trucks/trailers and Force Majeure etc.

Thermax Inc also does not accept any responsibility for delay on account of obtaining road/city/county permits etc. for road transportation of shipment.

Thermax Inc's freight forwarder will make an attempt to give 48 hrs notice to designated rigger before actual delivery. Thermax Inc will not be liable for costs related to manpower or equipment deployment by rigging company, in case of delays in delivery due to external circumstances cited above.

It is the responsibility of the rigging company to unload the shipment and to return the container in the proper manner on the agreed date with Thermax's freight forwarder. Any expenses incurred due to rigging company not accepting the delivery of equipment on agreed day, will be charged to Trane's account.

THERMAX LIMITED
COOLING & HEATING DIVISION
CHINCHWAD, PUNE- 411019 , INDIA

THERMAX

QUALITY ASSURANCE PLAN			
FORMAT NO. REV NO. EFFECTIVE DATE PAGE	AQF-QA-19 0 06.10.2000 1OF 3	CONTROL NO. REVISION NO. PAGE NO.	QAP/STD/HW 0 1 OF 5
VAPOUR ABSORPTION MACHINE (HOT WATER FIRED)			

1.0 JOB SPECIFIC DATA:

NAME OF EQUIPMENT	VAPOUR ABSORPTION MACHINE
EQUIPMENT NUMBER	-
DRAWING NUMBER	-
DESIGN CODE	-
OWNER	-
CONSULTANT	-
INSPECTION AGENCY	-
OWNER's JOB NUMBER	-
O.C. NUMBER	-

REV NO.	DATE	PREPARED BY	CHECKED & APPROVED BY	ACCEPTED BY	REMARKS
1					
0		(HARSHIT JANI)	J.J.Cohen		FIRST ISSUE

THERMAX LIMITED
COOLING & HEATING DIVISION
CHINCHWAD, PUNE- 411019 , INDIA

THERMAX

QUALITY ASSURANCE PLAN			
FORMAT NO. REV NO. EFFECTIVE DATE PAGE	AQF-QA-19 0 06.10.2000 2 OF 3	CONTROL NO. REVISION NO. PAGE NO.	QAP/STD/HW 0 2 OF 5
VAPOUR ABSORPTION MACHINE (HOT WATER FIRED)			

2.0 QUALITY STAGES AND INSPECTION:

SR NO	DESCRIPTION	CHECK			ACCEPTANCE	CHECK	CONTROL BY	
		CHARACTERISTIC	METHOD	EXTENT	STANDARD	BY	QC	INSP. AGENCY
1.	Review of QAP, Indication of Hold & Witness Points	Scope	Review	100%	Drawing/Spec. Purchase order	QA	R	-
2.	Review of WPS/ PQR/WPQ	Welding Parameters	Review	100%	ASME IX	WED	R	-
3	Material identification 1) Shell 2) Tube sheet 3) Nozzle pipes	Verification of TC with Material Specification Correlation of TC with material Dimensions	Visual Visual Measurement	100% 100% 100%	Matl. Specification TC Drawing	SHOP	H	-
4	Inspection of Tube plates after drilling	Dimensions Number of holes Minimum ligament Hole size Bank orientation Finish of holes	Measurement Count Measurement Gauge Visual Visual	100% 100% 100% 100% 100% 100%	Drawing Drawing Drawing Drawing Drawing Drawing	SHOP	H	-
5	Marking of opening on shell	Orientations Dimensions	Visual Measurement	100% 100%	Drawing Drawing	SHOP	H	-

THERMAX LIMITED
COOLING & HEATING DIVISION
CHINCHWAD, PUNE- 411019 , INDIA

THERMAX

QUALITY ASSURANCE PLAN			
FORMAT NO. REV NO. EFFECTIVE DATE PAGE	AQF-QA-19 0 06.10.2000 2 OF 3	CONTROL NO. REVISION NO. PAGE NO.	QAP/STD/HW 0 3 OF 5
VAPOUR ABSORPTION MACHINE (HOT WATER FIRED)			

2.0 QUALITY STAGES AND INSPECTION:

SR NO	DESCRIPTION	CHECK			ACCEPTANCE	CHECK	CONTROL BY	
		CHARACTERISTIC	METHOD	EXTENT	STANDARD	BY	QC	INSP. AGENCY
6	Set up of all nozzles/ connections	Dimensions Edge preparation	Measurement Template	100% 100%	Drawing Drawing	SHOP	H	-
7	Longitudinal Seam set up (Shell bottom to top)	Dimensions Profile Fitment of internals (Before putting shell top)	Measurement Measurement Visual	100% 100% 100%	Drawing TMH Drawing	SHOP	H	-
8	Welding of above (Lower shell & Upper shell 'L; seam)	Visual inspection	Visual	100%	TMH	SHOP	H	-
9	Unit assly.	Match Dimension	Visual Measurement	100% 100%	Drawing Drawing	SHOP	H	-
10	Full welding clearance	Overall dimension Welding of all attachment Visual inspection Panel bracket welding Final welding Visual Inspection Dimension Verification of whole Assly	Measurement Visual Visual Visual Visual Measurement	100% 100% 100% 100% 100% 100%	Drawing Drawing TMH Drawing TMH Drawing	SHOP	H	-
11	N_2 testing With soap solution (1.1 Kg/Cm^2)	Surface cleaning Leakage	Visual Visual	100% 100%	No rust & extraneous material No leakage	SHOP	H	-

THERMAX LIMITED
COOLING & HEATING DIVISION
CHINCHWAD, PUNE- 411019 , INDIA

THERMAX

QUALITY ASSURANCE PLAN			
FORMAT NO. REV NO. EFFECTIVE DATE PAGE	AQF-QA-19 0 06.10.2000 2 OF 3	CONTROL NO. REVISION NO. PAGE NO.	QAP/STD/HW 0 4 OF 5
VAPOUR ABSORPTION MACHINE (HOT WATER FIRED)			

2.0 QUALITY STAGES AND INSPECTION:

SR NO	DESCRIPTION	CHECK			ACCEPTANCE STANDARD	CHECK BY	CONTROL BY	
		CHARACTERISTIC	METHOD	EXTENT			QC	INSP. AGENCY
12	He testing (shroud)	Leakage	Measurement	100%	Leak < 1X10^-5 per std cc/sec	SHOP	H	
13	Pneumatic testing Tube Side (cooling water + chilled water)	Surface cleaning Pressure gauge calibration 2 nos. Range in Pr. Gauge Leakage	Visual Review Visual Visual	100% 100% 100% 100%	No rust & extraneous material WI 11.04.06 1.5 - 4 times test Pressure No leakage	SHOP	H	
14	Painting	Coating Thickness test	Measurement Visual	10%	THERMAX Painting STd	SHOP	H	-
15	Packing Inspection	Blanking of openings Packing Note All parts properly packed Marking details on cases	Visual Visual Visual Visual	100% 100% 100% 100%		SHOP	H	-

THERMAX LIMITED
COOLING & HEATING DIVISION
CHINCHWAD, PUNE- 411019 , INDIA

THERMAX

QUALITY ASSURANCE PLAN			
FORMAT NO. REV NO. EFFECTIVE DATE PAGE	AQF-QA-19 0 06.10.2000 3 OF 3	CONTROL NO. REVISION NO. PAGE NO.	QAP/STD/HW 0 5 OF 5
VAPOUR ABSORPTION MACHINE (HOT WATER FIRED)			

3.0 NOTES : ABBREVIATIONS

ENGG	ENGINEERING DEPARTMENT
NDE	NON DESTRUCTIVE EXAMINATION
PQR	PROCEDURE QUALIFICATION RECORD
PT	PENETRANT TESTING
QA	QUALITY ASSURANCE DEPARTMENT
QC	QUALITY CONTROL DEPARTMENT
TMH	THERMAX MANUFACTURING HANDBOOK
TC	MANUFACTURER's TEST CERTIFICATE
WED	WELDING ENGINEERING DEPARTMENT
WPQ	WELDER's PERFORMANCE QUALIFICATION
WPS	WELDING PROCEDURE SPECIFICATION
WI 10.01.01	WORK INSTRUCTION FOR RADIOGRAPHY EXAMINATION
WI 10.01.02	WORK INSTRUCTION FOR ULTRASONIC EXAMINATION OF WELDS
WI 10.01.05	WORK INSTRUCTION FOR LIQUID PENETRANT EXAMINATION
WI 10.01.06	WORK INSTRUCTION FOR MAGNETIC PARTICLE EXAMINATION
WI 11.04.06	WORK INSTRUCTION FOR CALIBRATION OF PRESSURE GAUGES

4.0 INSPECTION POINTS:

INSPECTION POINTS ARE INDICATED BY:

H	HOLD POINT	" H " UNDER `CONTROL BY` COLUMN INDICATES AUTHORISED INSPECTOR's HOLD POINT. THIS MEANS THE JOB CANNOT PROCEED FURTHER UNLESS CLEARED BY AUTHORISED INSPECTOR.
W	WITNESS POINT	" W " UNDER `CONTROL BY` COLUMN INDICATES THAT AUTHORISED INSPECTOR SHALL BE NOTIFIED AND HE MAY EXERCISE HIS OPTION TO WITNESS AND VERIFY A SPECIFIC OPERATION. FURTHER OPERATION SHALL PROCEED WHERE THE AUTHORISED INSPECTOR DOESNOT VALIDATE HIS OPTION.
R	REVIEW POINT	" R " UNDER `CONTROL BY` COLUMN INDICATES THAT ONLY DOCUMENTS WILL BE SUBMITTED TO AUTHORISED INSPECTOR FOR REVIEW
-	NO INSPECTION	SELF INSPECTION BY VENDOR / THERMAX.

Operation and Maintenance Manual
COGENIE Vapour Absorption Chiller
(With Siemens PLC panel)
Manual Part No: C107600304

Contents

Chapter 1	Cycle of Operation	I -	1 to 4
Chapter 2	Liquids	II -	1 to 2
Chapter 3	Chiller Illustration	III -	1 to 2
Chapter 4	Lifting & Installation Instructions	IV -	1 to 13
Chapter 5	Controls & Safeties	V -	1 to 38
Chapter 6	Operation of the Chiller	VI -	1 to 2
Chapter 7	Water Circuit Considerations	VII-	1 to 3
Chapter 8	Operational Activities	VIII-	1 to 9
Chapter 9	Commissioning	IX -	1 to 1
Chapter 10	Do's & Don'ts	X -	1 to 2
Chapter 11	Procedures	XI -	1 to 25
Chapter 12	Preventive Maintenance	XII-	1 to 2
Chapter 13	Troubleshooting	XIII -	1 to 10
Chapter 14	Electrical Details	XIV -	1 to 1
Chapter 15	Precautions for Long Term Shutdown	XV -	1 to 1
Annexure			
Annexure 1	Points To Remember	A1 -	1 to 1
Annexure 2	Cooling Tower Location	A2 -	1 to 1
Annexure 3	Piping Considerations	A3 -	1 to 3
Annexure 4	Rupture disk connection	A4 -	1 to 1

Chapter 1
Cycle of Operation

Chapter Objectives

This chapter helps you to understand the working cycle of the vapour absorption chiller and the functions of its various components

What is Refrigeration ?

Refrigeration is defined as the process of extracting heat from a low temperature medium and transferring it to a high temperature heat sink. Refrigeration maintains the temperatures of the heat source below that of its surroundings while transferring the extracted heat to a heat sink.

Basic Principles

The boiling point of water is directly proportional to pressure. At atmospheric pressure water boils at 100°C. At lower pressure it boils at lower temperature. At 6mmHg absolute pressure the boiling point of water is 3.7°C.

To change water from liquid to vapour it has to be heated. The water absorbs the heat and its temperature starts rising. However it rises until it reaches a point where the temperature stays constant and it starts boiling i.e. the liquid water vaporizes. This point it called the boiling point. At this point all the heat being absorbed by the water does not change its temperature but only its phase. This heat required to change the phase of a liquid to vapour is called the Latent of Vaporization. Similarly the heat rejected by a vapour when it condenses is called the Latent Heat of Condensation.

Lithium Bromide (LiBr) is a chemical similar to common salt (NaCl). LiBr is soluble in water. The LiBr water solution has a property to absorb water due to its chemical affinity. As the concentration of LiBr solution increases, its affinity towards water increases. Also as the temperature of LiBr solution decreases, its affinity to water increases.

Further there is a large difference between vapour pressure of LiBr and water. This means that if we heat the LiBr water solution, the water will vapourise but the LiBr will stay in the solution and become concentrated.

Absorption Cycle overview

Absorption systems use heat energy to produce a refrigerating effect. In these systems the refrigerant, i.e. water, absorbs heat at a low temperature and pressure during evaporation and releases heat at a high temperature and pressure during condensation.

A solution known as absorbent i.e. Lithium Bromide (LiBr) is used to absorb the vapourised refrigerant after its

evaporation at low pressure. This solution, containing the absorbed vapour is heated at a higher pressure. The refrigerant vaporizes and the solution is restored to its original concentration for re-use.

In a double effect absorption chiller part of the latent heat of condensation of the refrigerant is used in a second stage generator to enhance the efficiency of the cycle.

When the refrigerant undergoes a series of evaporation, absorption, pressurization, vaporization, condensation, throttling and expansion processes, absorbing heat from a low temperature heat source and releasing it to a high temperature sink so that its state is restored to its original one, it is said to have completed a refrigerating cycle.

Schematic Diagram

A schematic diagram of the absorption cycle is shown below.

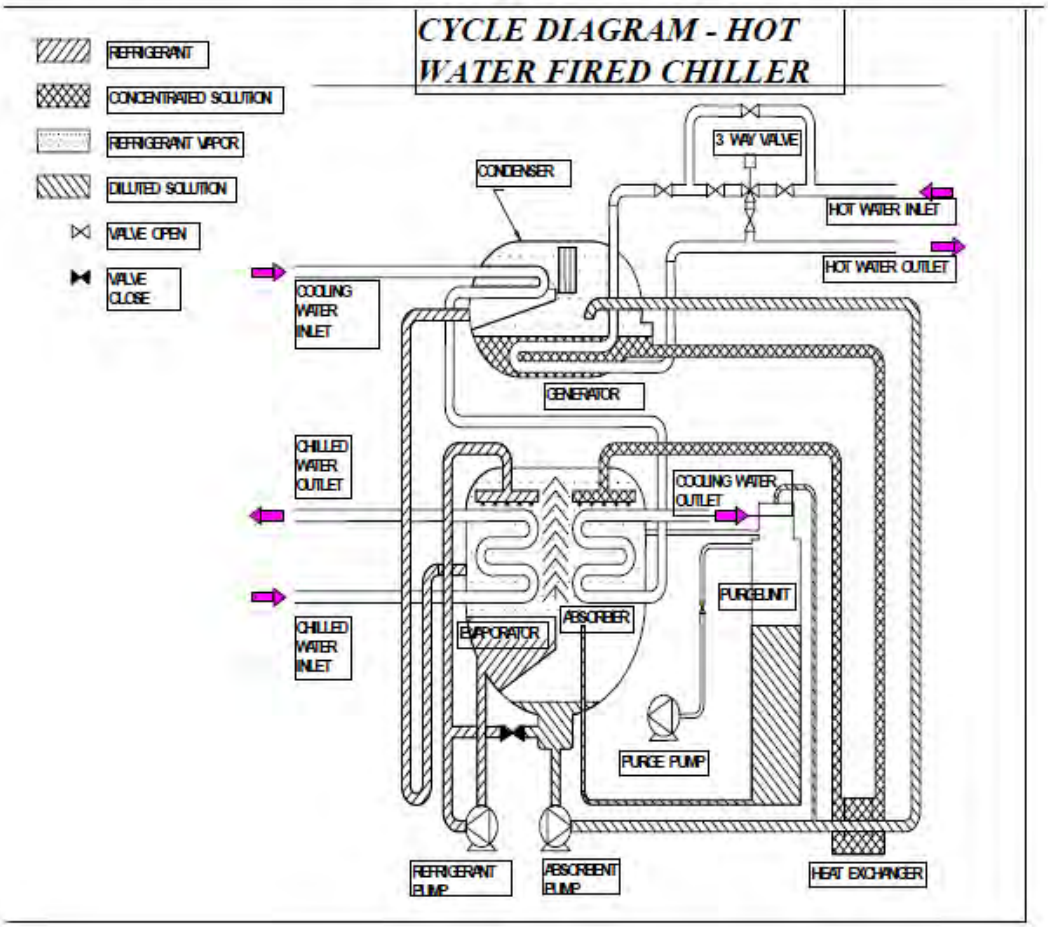

Individual Parts

The various parts of the absorption chiller are described below.

Evaporator

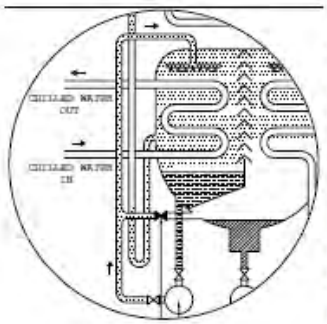

The evaporator consists of a tube bundle, an outer shell, distribution trays, and a refrigerant pan. The chilled water flows inside the tubes. A refrigerant pump circulates the refrigerant from the refrigerant pan into the distribution trays. From the trays the refrigerant falls on the evaporator tubes. The shell pressure is very low (≈6mmHg). At this pressure the refrigerant evaporates at a low temperature (≈3.7°C) and extracts latent heat of evaporation from the water being circulated through the evaporator tubes. Thus the water being circulated through the tubes becomes chilled.

Absorber

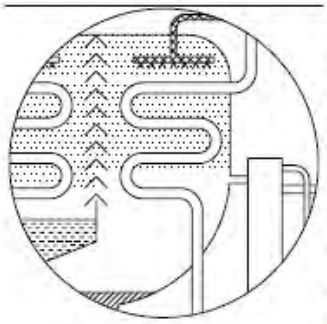

The absorber consists of a tube bundle, an outer shell (common with the evaporator), distribution trays and an absorbent collection sump. Concentrated absorbent solution (≈63%) from the generator is fed into the distribution trays. This solution falls on the absorber tubes. Concentrated absorbent has an affinity to water. Hence the vaporized refrigerant from the evaporator section is absorbed. Due to this absorption the vacuum in the shell is maintained at a low pressure and ensures the correct chilled water temperature. The concentrated absorbent becomes diluted. During this dilution the 'Heat of Dilution' is generated. The cooling water being circulated in the absorber tubes removes this heat. The diluted absorbent (≈59%) collects in the bottom of the shell.

Regenerative heat exchanger

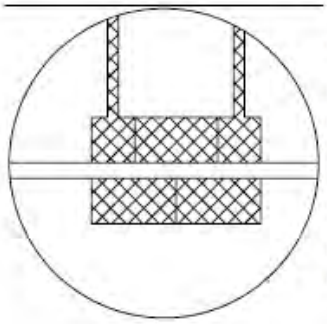

The absorbent pump pumps the cool diluted absorbent to the generator. It first passes through the heat exchanger where it absorbs heat from the concentrated absorbent. The solution then enters the generator. The heat exchangers serve to heat up the cool absorbent solution before it enters the high generator for reheating. This reduces the heat input required in the generator. This reduction in the energy input required increases the efficiency of the cycle.

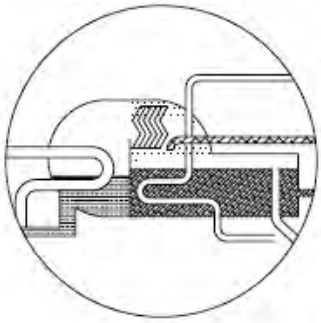

Generator

The generator and condenser tube bundles are enclosed in a shell and are separated by an insulation plate. The generator consists of a shell & tube heat exchanger. Heat is supplied to the Generator by means of the Hot water. The diluted absorbent surrounds these tubes and is heated. The temperature of the solution increases until it reaches the boiling point. The absorbed refrigerant boils out of the solution. The solution concentration increases (to ≈63%). The absorbent, which has become concentrated in the Generator drains to the absorber to begin a new absorbent cycle. The vaporized refrigerant generated passes through the eliminators and goes to the condenser.

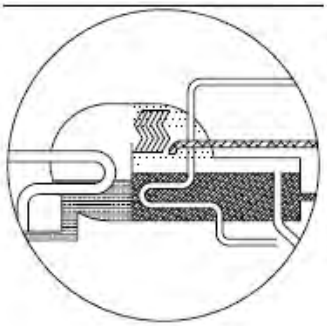

Condenser

Refrigerant vaporized from the absorbent passes through the eliminators to the condenser. Here the cooling water entering from the absorber, which flows in the condenser tubes, condenses all these refrigerant vapours. The refrigerant vapour condenses on the outside of the condenser tubes, heating the hot water, and collects in the bottom of the condenser. The condensed refrigerant flows to the evaporator.

Chapter 2
Liquids

Lithium Bromide (LiBr) - absorbent

Lithium Bromide (LiBr) is chemical. It is made from lithium obtained from lithium ore and bromide obtained from seawater. LiBr and Sodium Chloride (NaCl) have similar characteristics, because Lithium (Li) and Sodium (Na) are alkalis while Bromide (Br) and Chlorine (Cl) are halogens. Sodium Chloride is table salt. Hence we can easily imagine the properties of LiBr.

If table salt is left in a high humidity atmosphere, it becomes sticky. This is because it absorbs moisture from the atmosphere. LiBr has the same characteristics and its absorption power is stronger than the table salt. The higher the LiBr solution concentration and the lower its temperature, the stronger its power to absorb water vapour.

. Chemical formula : LiBr
. Molecular weight : 86.856
. Components : Li - 7.99%, Br - 92.01%
. Specific gravity : 3.464 at 25°C
. Melting point : 549°C
. Boiling point : 1265°C

Lithium Molybdate (Li_2MoO_4) - Corrosion Inhibitor

Lithium Bromide has a corrosive action on steel in the presence of oxygen. As the absorption chiller is a vacuum vessel, there is almost no oxygen in it. However, corrosion inhibitor is added in the absorbent and the absorbent alkalinity is adjusted. The corrosion inhibitor forms an inert protective layer on the inside surface of the chiller and inhibits the metal corrosion by LiBr. The formation of the protective layer reduces the concentration of the inhibitor. Hence the absorbent composition should be controlled, that is the amount of inhibitor should be maintained by chemically analysing the absorbent and recharging inhibitor as required. Excess inhibitor should not be added as it causes the Lithium Bromide to precipitate and degrades the chiller performance.

Water (H_2O) - Refrigerant

Refrigerant used in the absorption chiller is water. The water should be pure and free of contaminants. Distilled water or demineralised water is used as refrigerant.

Specifications of the water, which can be used as refrigerant, are

. Specific Resistance : 5×10^5 Ohm/cm
. Ca, Mg, Cl, Na : 0.01 ppm max.
. Sulphur and Ammonium shall not be detected.

Octyl Alcohol (2-Ethyl-1-Hexanol) Additive

To increase absorption effect of absorbent, Octyl alcohol is added into the chiller. Excess quantity of octyl alcohol should not be added into the chiller as it could form sludge in the heat exchangers and degrade chiller performance.

. Molecular weight : 130.23
. Specific gravity : 0.831 ~ 0.836 at 20°C
. Refractive index : 1.428 ~ 1.433

Chapter 3
Chiller illustration

Chapter Objective

This chapter includes the views of the chiller.

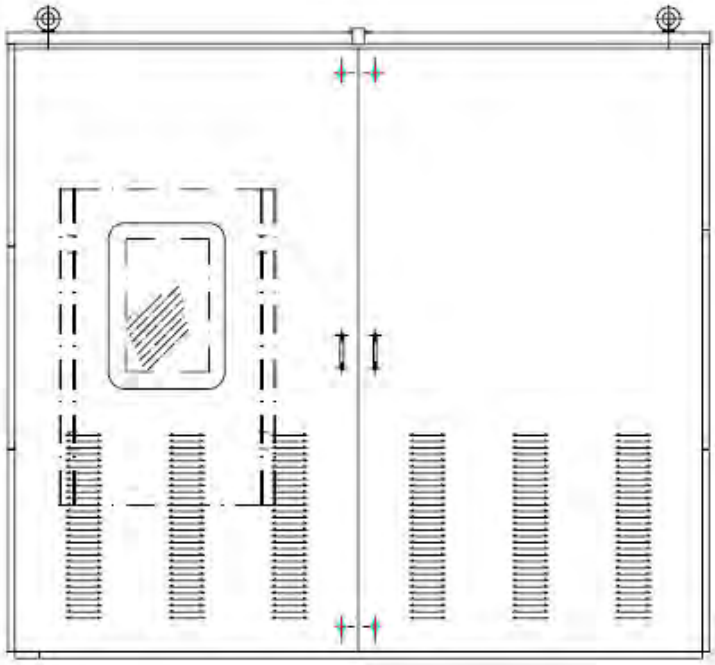

FRONT VIEW

Chapter 3
Chiller Illustration

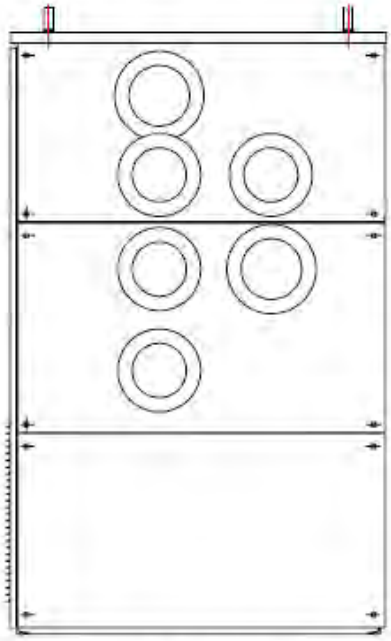

R.H.S.VIEW

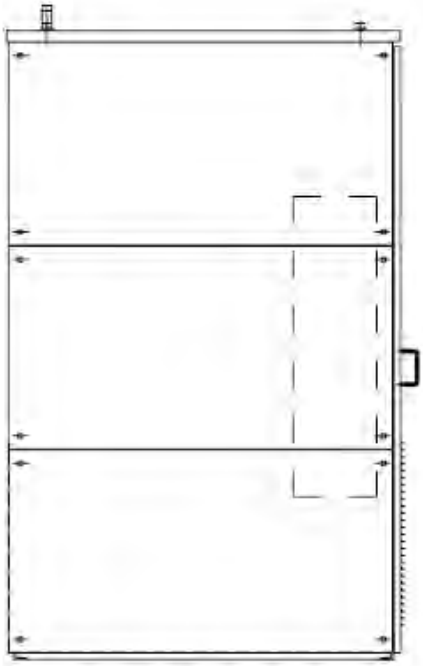

L.H.S.VIEW

Chapter 4
Lifting & Installation Instructions

Chapter Objectives

This chapter gives you instructions on installation & Site activities.

General

The Thermax absorption chiller is factory assembled, leak tested and wired. The installation activity by the installer consists of establishing the water, hot water and electrical services to the chiller. Rigging, installation, field wiring, field piping and insulation of the unit are the responsibility of the contractor and/or customer. The installer should be familiar with the installation instructions.

Notify Thermax of the anticipated start-up date. Send the "Request for start-up" form and a copy of the visual inspection report to Thermax. The "Request for start-up" form must be complete including the contingency P.O. number.

☞ **Contact Thermax at the following address for further clarification:**

Thermax Limited
Absorption Cooling Division
D-13, MIDC Chincwad,
Pune, - 411 019, India
Phone: 0091 212 77 59 41 (10Lines)
Fax: 0091 212 77 59 07 / 77 20 49

Safety considerations

Follow the instructions and safety considerations contained in this manual for installing the absorption chiller. Be sure to understand and follow these guidelines.

Warning and Caution

- DO NOT charge oxygen into the chiller unit for testing or any other purpose. Always use nitrogen gas.
- DO NOT exceed the specified test pressures in the unit.
- DO NOT bypass any safety device in the unit.
- ALWAYS locate the unit in a place where the ambient temperature does not fall below the freezing point of water, as water is the refrigerant.

- DO NOT use any other component on the unit for lifting or rigging the unit other than the specified.
- DO NOT work on any electrical component, until you are sure that all power is OFF.
- DO NOT store lithium bromide in metallic drums or containers.
- DO NOT disturb the setting of any instrument or safety provided on the chiller.

Special notes are included in the following sections, wherever applicable.

Receiving the unit

When the unit is received at the job site, check the unit for any visual damage. Record any damage and get it examined by the transportation inspectors before removing it from the shipping conveyance. Manufacturer is not responsible for any in-transit damage to the unit.

Check all the items against the packing list. Notify the nearest Thermax office immediately for any shortages, wrong supply or damage.

Unloading instructions

Use lifting eye bolts provided on the chiller. Do not rig from any other point to avoid any damage to the unit or any personal injury.

- Use proper sized hooks/slings and approved methods for lifting the chiller.
- Lift the chiller from all the four corners while keeping the unit level with respect to the ground.
- Take care while hooking up the eye bolts.
- Avoid any damage to the interconnecting pipes on the chiller.
- Avoid any damage to the control panel and the chiller mounted instruments.
- While unloading care to be taken not to tilt the chiller.

Unloading of Chiller (Single piece)

As a standard feature, the chiller models LT 1 to LT 8 are shipped in single piece. The unit is provided with the one eye bolt at each corner at the top. Refer the figure given below for unloading and installation :

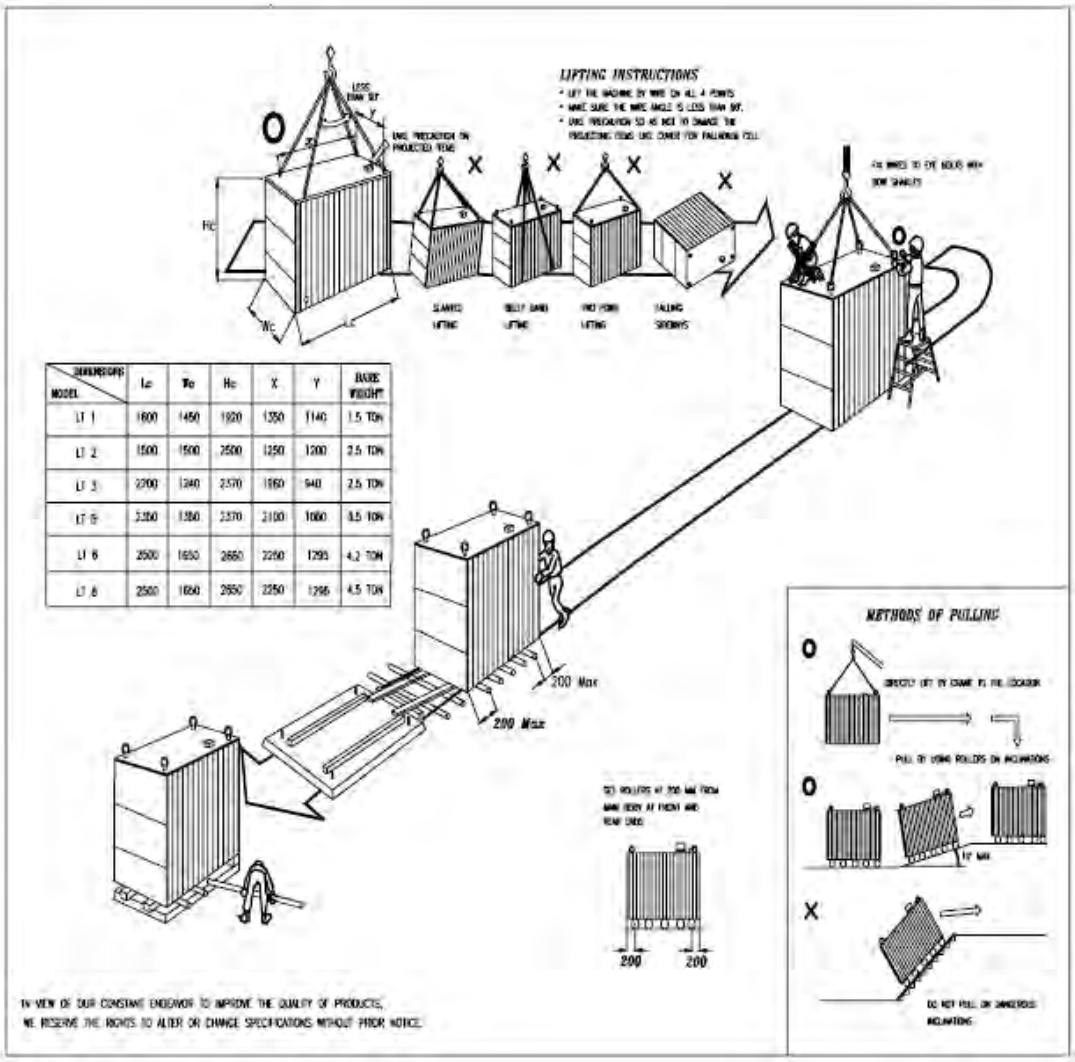

DIMENSIONS / MODEL	Lc	Wc	Hc	X	Y	BARE WEIGHT
LT 1	1600	1450	1920	1350	1140	1.5 TON
LT 2	1500	1500	2500	1250	1200	2.5 TON
LT 3	2200	1240	2370	1860	940	2.5 TON
LT 5	2350	1350	2370	2100	1000	3.5 TON
LT 6	2500	1650	2650	2250	1295	4.2 TON
LT 8	2500	1650	2650	2250	1266	4.5 TON

Storage of the unit

If the unit is not going to be installed immediately, it is important to prevent any damage or loss on the unit by keeping the unit covered. Indoor storage is ideal. Nitrogen should not be removed from the chiller unit. All the accessories supplied along with the unit should be kept in the same place.

Visual inspection report (after unloading the chiller)

Job name :
Address :
Chiller model no.: Unit serial no.:
Customer P.O. no.:

A. External visual inspection (Standard = No damage/Not missing)

Sr.	Item to be checked	Any damage /missing	Remarks
A.	Chiller		
B.	Components and devices:		
1.	Temperature sensor		
2.	Manometer		
3.	Absorbent pump		
4.	Refrigerant pump		
5.	Purge pump		
6.	3-way control valve *		
7.	Refrigerant solution level electrodes		
8.	Antifreeze thermostat		
9.	Chilled water D.P.switch		
10.	Sight glasses		
11.	Isolation valves for absorbent pump		
12.	Isolation valves for refrigerant pump		
13.	Diaphragm valves (3 nos.) for purge device		
14.	Refrigerant blow down valve		
15.	Control panel		
16.	Electrical wiring		

Note: * = Not provided when valve is not in Thermax scope.

B. Check for the valve position (Standard = Close position)

Sr.	Item to be checked	Close/open	Remarks
1.	Diaphragm valves (3 nos.) for purge device		
2.	Service valve caps and flared nuts at following locations :		
a)	Heat exchanger		
b)	Dilute solution line from absorbent pump		
c)	Purge system		
d)	Refrigerant pump discharge		
3.	All Damper caps		

C. Nitrogen pressure

Check the nitrogen pressure inside the chiller by opening the service valve for absorbent pump pressure gauge or high temperature generator pressure gauge and note down the gauge reading:

a) Measured value :.....psig

b) Ambient temperature :.....°F

Note: If the above value of nitrogen pressure is atmospheric i.e. 0 psig, immediately notify Thermax .

☞**NOTE:** In case there is a large time gap between the chiller's arrival at site and installation, keep the chiller under nitrogen pressure.
DO NOT REMOVE NITROGEN FROM THE CHILLER.

D. Accessories accompanying the chiller
(Standard = Not missing/No damage/ No shortage as per the packing slip)

Sr.	Item to be checked	Remarks
1.	Check the number of Lithium Bromide cans/drums	
2.	Are the cans/drum in good condition	
3.	Check the number of refrigerant cans/drum	
4.	Are the cans/drum in good condition	
5.	Check for number of foundation bolts	
6.	External visual inspection of the following :	
a)	3-way control valve	
b)	Any other item	

Chapter 4
Lifting & Installation instructions

In case any other items (like spares) are also ordered along with the chiller, check for any external visual damage/shortage with reference to the packing slip.

☞In case of any shortage/damage notify the nearest Thermax office immediately.
☞To prevent any loss or damage, leave all the parts in their original packing until the installation.

Engineers' signature : Date :

Name

Company's name :

Company's address :

Instructions for rigging and shifting to the foundation	Rig the chiller to its proper location with care to avoid any damage to the unit. Provide a plate below both the saddles of the chiller. Roll the chiller with the help of castors or rollers, placed below the plates. The chiller can be pulled gradually from one end by means of winch. The wire rope used for pulling is to be tied to the saddle. ☞Check that sufficient clearance space is provided on either side of the unit for service and maintenance. Refer the specification sheet and the General Arrangement drawing for the dimensions and clearances.
Leveling of chiller	It is very important to level the chiller prior to hooking up the chiller with the external piping. Proper leveling of the chiller ensures that the rated capacity of the unit is achieved. Allowable tolerance is less than or equal to 1/16 inch per 5 ft. (1mm per 1000 mm) both lengthwise and sidewise. If casing panels from the both the sides of chiller (header side) are removed, you will find four leveling check points provided on the chiller. (labeled as A, B, C and D in the figure below) These check points are designated by the three punch marks on the tube sheet or shell of the lower shell of the chiller.
Procedure for leveling the chiller	Fill a clear vinyl hose (diameter of the hose ≥ 3/8") with water, ensuring that there are no air bubbles in the hose. Using the point A as the reference point,

measure the difference in the water level at the other points (B, C and D) .

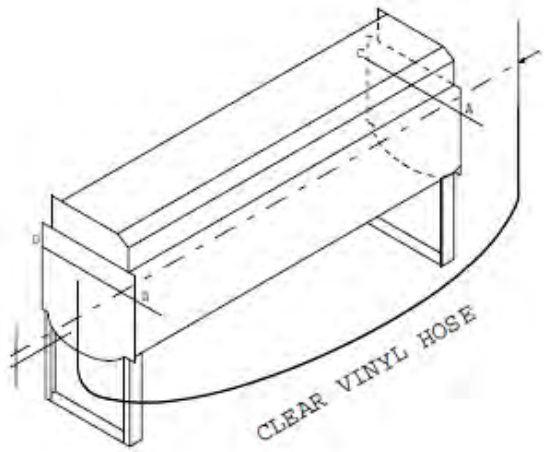

A	B	C	D
0 mm	mm	mm	mm

Leveling calculations are as shown below :

$$\frac{A-B}{L}, \frac{C-D}{L}, \frac{A-D}{L}, \frac{B-C}{L}, \frac{A-C}{W}, \frac{B-D}{W}$$

where L = Length of the chiller
W = Width of the chiller

If the tolerance is not met, provide shim at the appropriate points by inserting a metal shim between the chiller frame and the foundation. Metal shim size is approximately 2" (50 mm) width X 3" (75 mm) length. Prepare the shims of different thickness 0.024" (0.6 mm) to 0.354" (9 mm).After providing

the shims, confirm the leveling of the chiller by taking a new set of readings.

Procedure for grouting

After the leveling of the chiller is done, grout the chiller, before connecting the external piping to the chiller. Refer the submittals for details (General Arrangement and Foundation Drawing)

- Fix the anchor bolts.
- Weld the washer to the chiller frame.
- Tighten the nuts.

Piping instructions

- The crossover piping from the absorber to the condenser is a standard feature of Thermax absorption chiller.
- Make sure that all the piping is adequately supported and fitted to prevent any strain on the chiller nozzles and connecting flanges.
- Check that the air-vent valve, drain valve and pressure gauges are provided on the chilled water, cooling water and hot water piping. Air-vents should be at the highest point in the piping to remove the air trapped inside the piping.
- Check the chilled water and cooling water pump and pipe sizing is as per the required flow rates.
- Make sure that flush cleaning of inlet chilled water line and inlet cooling water line to the chiller is done, before connecting the same to the chiller.
- Make sure that the flush cleaning of the inlet hot water line is done before connecting it to the chiller.
- Check the connective direction of the chilled water, cooling water, and hot water piping .
- Check the valve positions on the chilled water, cooling water and hot water piping.
- Make sure that strainers are provided in the water circuits.

- Install the flow switch in the cooling water circuit as per the manufacturer's instructions and interlock it with the unit control panel. (Supply of flow switch is optional)

Electrical instructions

In connecting power wiring, following precautions should be taken:

- Check that all field wiring is in accordance with the National Electrical Code and state and local codes.
- Use Copper conductors only.
- All wiring is to be checked for damage and all terminal connections tested for tightness.
- The power supply should match the unit nameplate in volts, phase and Hertz. Voltage must be within ± 10% of nameplate value.
- For minimum circuit capacity and maximum fuse size, see the unit nameplate.
- Make sure that the wiring to the chiller control panel is done properly.
- Check that the interlocking of the chilled water and cooling water with the chiller control panel is done properly.

☛Refer the submittals for further details on the insulation of the unit.

Specification sheet for Thermax absorption chiller

Job name :
Address :
Chiller model :
Energy source : Hot water
Cooling capacity :

Chapter 4
Lifting & Installation instructions

Sr.	Description	Value	Unit
1.	Shipping method	One section	-
2.	Maximum shipping weight		Lb. / Tons
3.	Total shipping weight		Lb. / Tons
4.	Operating weight		Lb. / Tons
5.	Physical dimensions		
a)	Length of the unit		inches / mm
b)	Width of the unit		inches / mm
c)	Height of the unit		inches / mm
d)	Clearance for tube cleaning (on one side only)		inches / mm
6.	Electric power supply		
a)	Voltage	± 10%	Volts
b)	Phase	3 phase	
c)	Frequency		Hz
d)	Minimum circuit capacity		Amperes
e)	Maximum fuse size		
f)	Absorbent pump rating		kW
g)	Refrigerant pump rating		kW
h)	Purge pump rating		kW
7.	Chilled water circuit		
a)	Flow		gpm / m^3/hr
b)	Entering temperature		°F / °C
c)	Leaving temperature		°F / °C
d)	Friction loss		ft.w.c. / m.w.c.
e)	Number of passes		
f)	Connection diameter		inches / mm
8.	Cooling water circuit		
a)	Flow		gpm / m^3/hr
b)	Entering temperature		°F / °C
c)	Leaving temperature		°F / °C
d)	Friction loss		ft.w.c. / m.w.c.
e)	Number of passes (Absorber/condenser)		
f)	Connection diameter		inches / mm
9.	Hot water circuit		
a)	Flow		gpm / m^3/hr
b)	Entering temperature		°F / °C
c)	Leaving temperature		°F / °C
d)	Allowable pressure drop		ft.w.c. / m.w.c.
e)	Connection diameter		inches / mm

Request for start-up of Thermax Absorption Chiller

Job name:_____

Address:_____

Order no._____ **Unit serial no.**_____

This form is to be completed, signed and forwarded to the local Thermax sales office/ representative at least two weeks prior to the anticipated date of start-up

1. Absorption chiller

a. Model no.
b. Erected on foundation ?
c. Leveled and grouted ?

2. Piping

a. Ensure that the connected piping is properly supported and puts no strain on the unit. ?
b. Flush cleaning of chilled water and cooling water piping done before connecting to the chiller unit. ?
c. Chilled water piping with air-vents and drain valves connected to:
   - The chiller unit ?
   - The chilled water pumps ?
   - The Air handling unit ?
d. Cooling water piping with air-vents and drain valves connected to:
   - The chiller unit ?
   - The cooling water pumps ?
   - The cooling tower ?
e. Water supply connected for filling the system with:
   - Chilled water ?
   - Cooling water ?
f. System filled with:
   - Chilled water ?
   - Cooling water ?
g. Pumps run, flow rates verified and air bleeding from the system done on:
   - Chilled water circuit ?
   - Cooling water circuit ?
h. Strainers cleaned and reinstalled on:
   - Chilled water system ?
   - Cooling water system ?
i. Thermometers and pressure gauges installed on the:
   - Chilled water circuit ?
   - Cooling water circuit ?
j. Make-up water connected to cooling tower ?
k. Water treatment equipment installed and treated water available ?
l. Hot water piping:

- Flush cleaning of hot water piping done before connecting to the unit ?
- Hot water control valve mounted on the circuit ?
- Hot water piping connected to the unit ?
- All valves, air vents and drains provided on the hot water circuit ?
- Pressure gauge provided on the hot water line before the control valve ?
- Hot water at required pressure and temperature available at the inlet of the hot water control valve?

3. Electrical wiring:

a. Rated power supply connected to the chiller control panel ?

b. Wiring connected from the chiller control panel to the hot water control valve ?

c. Wiring complete for interlocks with chilled water and cooling water pumps ?

d. Motors and power supply connected to and rotation checked for:
- Chilled water pump ?
- Cooling water pump ?
- Cooling tower fan ?
- Hot water pump ?

4. Following solutions in right quantity available at the job site:
- Lithium bromide with corrosion inhibitor ?
- Refrigerant and additive ?
- Purge pump oil ?

5. Full load and conditions available for proper test and balance of chiller ?

SERVICES TO BE RENDERED

The initial start-up of the chiller will be supervised by a Thermax Service Representative. He will supervise the work of the installing contractor on the following terms:

1. Checking the unit for leaks
2. Charging the refrigerant and Lithium Bromide
3. Checking the unit and its factory-mounted controls
4. Pre start-up check and starting of the unit
5. Supervise training of operator and contractor personnel

THE SUPERVISORY SERVICES LISTED ABOVE DO NOT INCLUDE ANY RESPONSIBILITY FOR THE FOLLOWING:

1. Installation and operation of the temperature control system external to the unit.
   a. Balancing of the air distribution side of the system.
   b. Balancing of the water side of the system. (As required)
2. Electrical wiring performed by others.

THE INSTALLING CONTRACTOR SHALL FURNISH THE FOLLOWING:

1. All materials and labor required to complete the installation.
2. A refrigeration service mechanic to assist Thermax start-up personnel during the initial start-up to be trained in unit operation. This training is essential in performing In-warranty labor incumbent upon installing contractor and or end user.
3. A refrigeration service mechanic to repair or replace the parts of the system that may need repair or replacement.
4. A suitable load for tests and adjustments (units cannot be satisfactorily tested with less than full load condition, the manufacturer cannot assume any responsibility for the operation of the unit until it has been satisfactorily tested and accepted by the purchaser).

With reference to the terms of this contract, we (the customer) are requesting the presence of the Thermax Authorized Representative at the job site on or about_____(Month) (Day)_____(Year) to supervise start-up of the system and instruct our operating personnel. On receipt of this form Thermax will schedule their representative to this job within ten to fourteen days of the requested date. We, the undersigned, will have our operating and servicing people at the job site for training, and to assist with the start-up of this equipment, this training being a requirement to implement servicing the equipment.

It is understood that the services of the Thermax Service Representative will be furnished per the Terms of Sale Agreement for a period not to exceed the normal working days a stipulated in the Terms of Sale.

ADDRESS_____ **DATE**_____

CITY_____**STATE**_____**ZIP**__

SIGNED _____

PHONE_____

TITLE_____

Chapter 6
Operation of the Chiller

Chapter Objective

This chapter describes the pre-start checks, starting procedure and the stopping procedure.

Pre - start checks

. Switch on the input power supply to the control panel.
. Check and maintain the vacuum in the chiller.
. Check all the set points.

Starting Procedure

. Start the chilled water pump and maintain the required ΔP across the chiller. If the flow rate is less than minimum rated flow, CHILLED WATER FLOW / TEMPERATURE TROUBLE lamp will glow. After setting right the flow, the DP switch and the flow switch this lamp will OFF.
. Start the cooling water pumps / flow and maintain the required ΔP across the chiller.
. Start the air-compressor and / or maintain the required air pressure (oil and moisture free air) supply to the air filter regulators.
. Open the isolating valve before the hot water control valve and maintain the required hot water flow rate and temperature before the hot water control valve.
. Give chiller 'START' command on the operator panel. Chiller ON indicator on panel will glow . Absorbent pump contactor 88A is energized. Refrigerant pump contactor 88R is energized. The level controller 33RL controls refrigerant pump 'ON/OFF'.

Slow opening of hot water control valve starts and opens from 0-100% in 10 minutes, when the generator temperature is below 70°C.

After 10 minutes the control valve is put into modulation control. The valve opening is controlled according to the chilled water PID temperature control and the valve status will be displayed accordingly.

Stopping Procedure

. Put the 'M/C CYCLE' switch into the 'OFF' position on the operator panel.
.Hot water control valve bypasses the flow immediately.
.The contactor 88R is de-energized and the refrigerant pump stops.
. Chiller goes into dilution cycle.
. Cooling water pump stops or shut off valve closes after 1 minute.
. After 20 minutes, dilution cycle completes and the absorbent pump stops.
. Stop the chilled water pump / flow.
. The chiller stops completely.

Chapter 7
Water Circuit Considerations

The lower the temperature of cooling water, the better.

The temperature at which the refrigerant vapour in the condenser condenses goes down in proportion to the reduction in the temperature of cooling water. As the condensing pressure reduces, the boiling temperature of the LiBr solution in the generator is lowered. Hence the quantity of heat required in the generator is reduced, resulting in lower energy consumption.

Extremely low cooling water temperature is not acceptable.

LiBr solution crystallizes when it is cooled. As the LiBr solution concentration increases the crystallization temperature decreases. At a concentration of 65% the crystallization temperature is 42°C, at a concentration of 60% the crystallization temperature is 17°C and at a concentration of 55% the crystallization temperature is 5°C. The cooling water cools the diluted LiBr in the absorber which cools the concentrated LiBr in the heat exchanger (HE). If the concentrated LiBr is cooled so that it crystallizes in the HE, the LiBr stops flowing through the HE and the chiller cannot operate. Hence the temperature of cooling water is to be controlled to ensure that the LiBr does not crystallize.

Capacity of the chiller reduces when cooling water temperature increases

LiBr becomes hot when it absorbs vaporised refrigerant. As the temperature of LiBr solution increases its absorption power decreases. Cooling water removes heat from the LiBr and ensures maximum absorption of the refrigerant. If the cooling water temperature increases so does the LiBr temperature. Hence the absorption of refrigerant vapour is reduced and the pressure in the evaporator increases. The rated chilled water temperature cannot be maintained and hot water is wasted. To prevent this, the maintenance of the cooling water temperature is essential and cooling water temperature should not be allowed to rise.

Interlock between chilled and cooling water flows

If the chilled water flow to the chiller stops for any reason, the cooling water flow to the chiller should also stop within one minute. If the cooling water flow to the chiller continues when the chilled water flow is stopped, the absorbent solution in the absorber continues to get cooled and creates a high vacuum in the lower shell. The refrigerant temperature drops sharply and the stagnant chilled water in the evaporator may freeze.

Ensure that the cooling water pump stops by interlocking the chilled and cooling water pump contactors so that the cooling water pump stops if the chilled water pump is stopped.

In case the cooling water pump is not dedicated to the chiller and the cooling water pump cannot be stopped when the chilled

water pump stops, provide a butterfly valve in the cooling water inlet line to the absorption chiller. Hook up the cooling water stop signal from the control panel to the actuator of the butterfly valve so as to close the valve when cooling water is not required.

Water treatment of chilled and cooling water

The water treatment of chilled and cooling water is important for the chiller performance and long life.

If the water quality is bad and shows a scaling tendency, scale adheres to the inside wall of the tubes of the evaporator, absorber and condenser. The heat transfer between the chilled water and the refrigerant, and the cooling water and the LiBr solution and the condensing refrigerant reduces. This causes an increase in the LiBr and condensed refrigerant temperatures and increases the hot water consumption. The chilled and cooling water should be treated to prevent scaling inside the tubes.

If the chilled or cooling water becomes corrosive, it will corrode the inside of the evaporator, absorber and condenser tubes. Tube failure due to corrosion will occur. It is essential to fully treat the chilled and cooling water to prevent corrosive tendency.

Water Quality

The standard for water in the chilled and cooling water circuits is shown in the table below.

STANDARD WATER QUALITY

Items	Cooling water		Hot water / Chilled water		Tendency	
	One-pass or circulating	Make-up water	Circulating	Make-up water	Corr osion	Scal ing
pH 25°C	6.5~8.0	6.5~8.0	6.5~8.0	6.5~8.0	✓	✓
Electrical conductivity (25μS/cm)	800 or less	200 or less	500 or less	200 or less	✓	
M alkalinity (ppm)	100 or less	50 or less	100 or less	50 or less		✓
Total hardness (ppm)	200 or less	50 or less	100 or less	50 or less		
Chlorine Ion (ppm)	200 or less	50 or less	100 or less	50 or less	✓	
Sulphuric acid ion (ppm)	200 or less	50 or less	100 or less	50 or less	✓	
Total ion (ppm)	1.0 or less	0.3	1.0 or less	0.3	✓	✓
Sulphur ion (ppm)	Not detected	Not detected	Not detected	Not detected	✓	
Ammonium Ion	1.0 or less	2.0 or less	0.5 or less	0.2 or less	✓	
Silica (ppm)	50 or less	30 or less	50 or less	30 or less		✓
Free carbonic acid	-	-	10	10	✓	

NOTE:

1. Each item of the standard values has a strong bearing on the failure due to corrosion or scale formation and if any value item deviates from the standard value, it will cause corrosion or scaling. Therefore, these should be controlled.

2. The range of the quality of water, which may be used, differs depending on the chemicals used to treat the water, and is not given here. It is desirable to set the appropriate water quality control values under the guidance of a water-processing specialist who will periodically control it.

Chapter 8
Operational Activities

Chapter Objective

This chapter describes the operational activities required to keep the chiller in best condition. These activities are

- Air purging
- Blowdown of refrigerant
- Maintenance of operating log

These should be carried out as per the Operational Activity Schedule.

Air Purging

Air purging is the activity by which non-condensable gases are removed from the chiller. This is done by operating the vacuum pump and opening the manual air purge valves. After purging is completed the valves are closed and the vacuum pump is stopped.

Air Purging System

The air purging system (see Figure 9.1) consists of -

Purge unit

Non condensable gases and water vapour are drawn from the absorber into the purge unit by a venturi action using absorbent bled off the absorbent pump discharge. The gases are bubbled through LiBr collected at the bottom of the storage tank to remove water vapour. The non-condensable gases collect to a maximum pressure of 20mmHg.

Valve assembly

This consists of an arrangement of three diaphragm valves that enable the operator to connect the vacuum manometer to different parts of the chiller by closing and opening the valves.

Manometer

A mercury in glass vacuum manometer capable of reading vacuum from 0mmHg absolute to 100mmHg absolute.

Service valves

One service valve provides access for the manometer to the chiller and the other provides access for maintenance procedures like N_2 charging and sampling.

Purge pump

A double stage oil sealed vacuum pump is used for evacuating the chiller and carrying out maintenance procedures.

Measuring vacuum

Three different vacuum measurements are carried out. The positions of the manual purge valves for these measurements are described in the table below.

	Position of Manual Purge Valves		
Vacuum reading	Valve no. 1	Valve no. 2	Valve No. 3
Ultimate (No Load) Vacuum	Open	Closed	Closed
Pressure in the storage tank	Closed	Open	Closed
Pressure in the shell	Closed	Closed	Open

Reading the manometer

The manometer (see Figure 9.2) consists of a glass tube fitted into a casing with a graduated scale. One end of the glass tube is sealed and the other end is connected to the vessel whose
degree of vacuum is to be measured. Mercury fills the glass tube from the sealed end to the bottom of the graduated scale.
When the manometer is connected to a vessel at a vacuum of 100mmHg or greater, the mercury drops in the sealed leg of the glass tube. The degree of vacuum is the difference in the level of mercury in the two legs. This is read off the graduated scale.
The level of mercury in the sealed leg of the manometer should always be higher than the other leg. Otherwise the reading is wrong and the manometer has to be repaired.
When the manometer is connected to the atmosphere the mercury should rise to the top of the sealed leg. If there is a gap between the mercury and the top of the sealed leg of the manometer, it is faulty and should be repaired.

Kinds of air purging

The two types of air purging are
Purging from the storage tank, and
Purging from the shell.
The procedure followed for the two types of purging are the same except for the position of the manual purge valves (shown in the earlier table)

Air purging procedure

. Power on the chiller panel if it is off.
. Start the purge pump.
. Check that the purge pump is running well.
. Open Manual purge valve No. 1.
. Check that the ultimate (no load) vacuum developed by the vacuum pump is 4mmHg or less.
. Open Manual purge valve No. 2 – for purging storage tank.

Manual purge valve No. 3 - for purging from shell.
. Continue operation of purge pump till purging is completed.
. Close Manual purge valve No. 2 - when purging storage tank.

Manual purge valve No. 3 - when purging from shell.

Continue operation of purge pump for 30 minutes to remove water vapour from pump oil.

. Close Manual purge valve No. 1.

. Stop the purge pump.

Precautions

. Check that the ultimate vacuum of the purge pump is 4mmHg or less before air purging.

.Carry out air purging at least once a week. Purging may be required at more frequent intervals.

.Always keep the gas ballast valve open while purging to prevent water from contaminating the purge pump oil.

.Carry out purging from storage tank before the storage tank pressure reaches 20mmHg.

.Use ENCLO 68 oil for Purge pump.

Blowdown of refrigerant

During operation, a small amount of absorbent disperses in the refrigerant and accumulates over time, resulting in a reduction in cooling capacity. Blowdown is carried out to purify the refrigerant. Contaminated refrigerant collected in the refrigerant pan is transferred to the absorber sump. Pure, fresh refrigerant collects in the refrigerant pan.

Procedure

. Put the refrigerant pump switch into "auto" mode if it is not so already.

. Confirm that the refrigerant pump is running and refrigerant is visible in the sight glass.

. Open the refrigerant blowdown valve completely. Refrigerant starts being pumped to the absorber sump.

. Wait till the refrigerant pump stops due to low level signal from the refrigerant level relay (about 15min), and close the refrigerant blowdown valve completely.

. Refrigerant will start building up and the refrigerant pump will start when the refrigerant level reaches the center of the evaporator sight glass. (About 20 min)

. Repeat the procedure two or three times for complete purification of refrigerant.

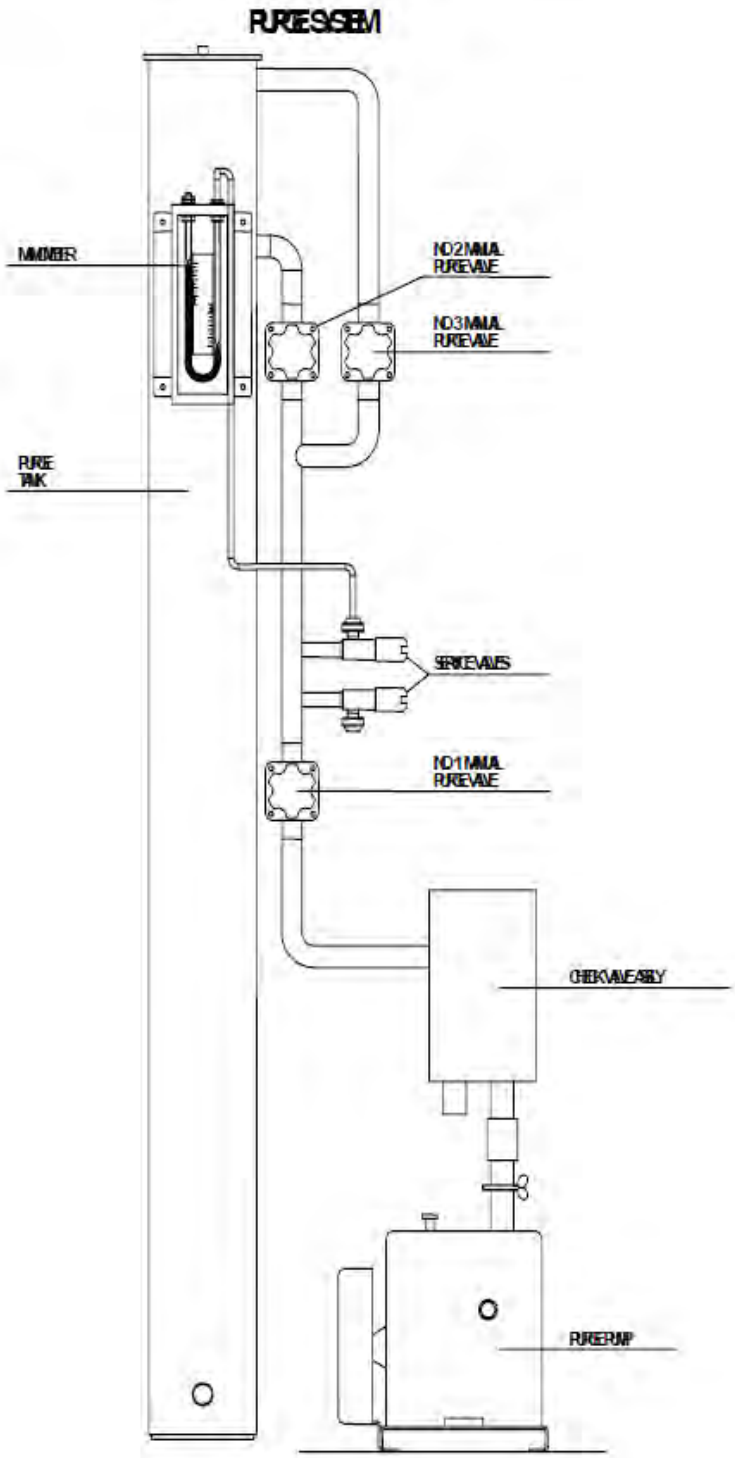
PURGE SYSTEM
MANOMETER
NO2 MANUAL PURGE VALVE
NO3 MANUAL PURGE VALVE
PURGE TANK
SERVICE VALVES
NO1 MANUAL PURGE VALVE
CHECK VALVE ASSY
PURGE PUMP

Figure 9.2

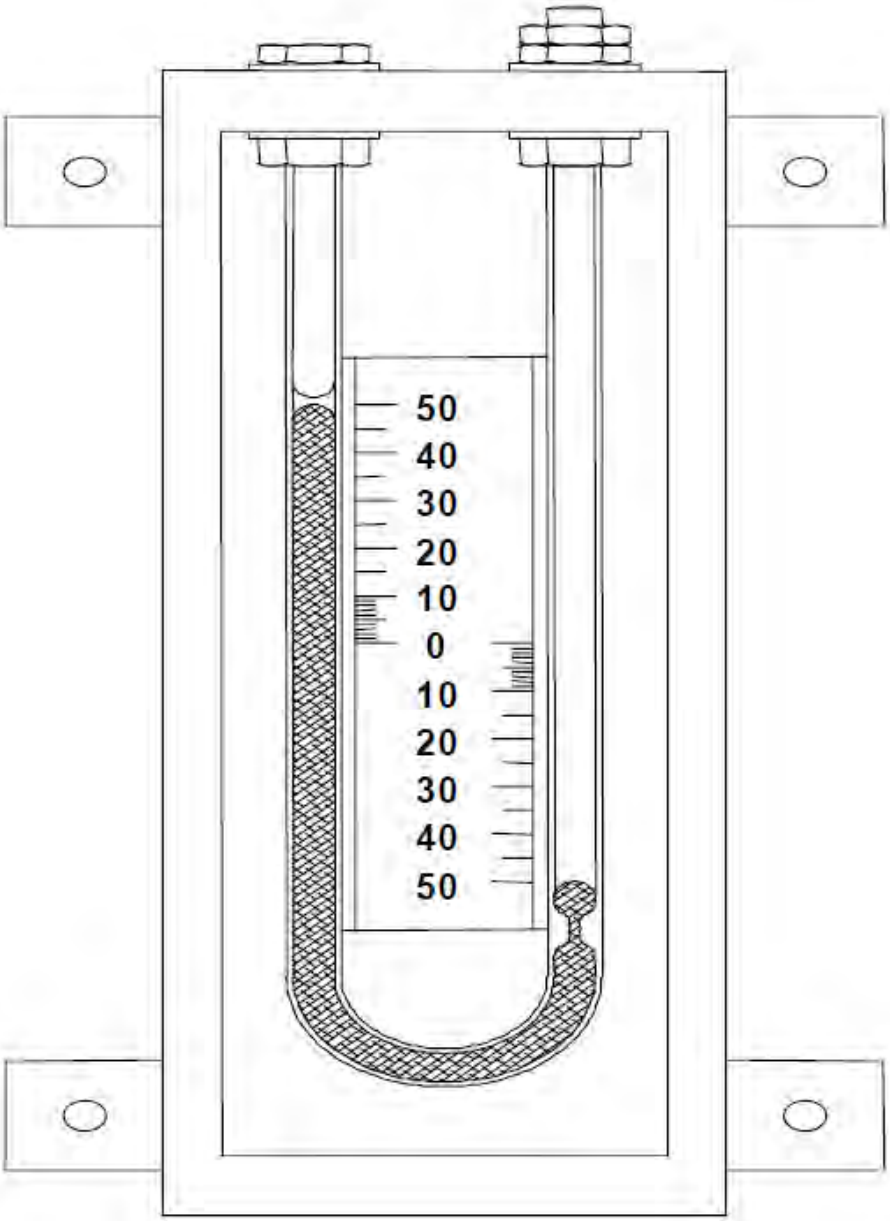

MANOMETER
Figure 9.2

Chapter 8
Operational Activities

Palladium Cell(Optional item-shall be provided as per customers request):

The expulsion of the non condensable gasses is done by the purge unit where the non condensables (mainly H_2) are sent to the purge tank. There are two methods to remove the gases from purge tank.

Use a vacuum pump (as described)

Or use a device to expel Hydrogen - THE PALLADIUM CELL

Before understanding the working of the palladium cell let's revise a few phenomenon

Absorption : A process in which fluid molecules are taken up by a liquid/solid and distributed through the body.

Adsorption : The surface retention of solid, liquid, gas molecules, atoms, ions by a solid or liquid.

Diffusion : The spontaneous motion of atom/molecule to new site within a material.

The palladium cell is made of 6 palladium tubes (each 3.2OD x 0.25 thk) inserted into a steel box welded to the wall on both sides (as in the figure) and a block with a through hole for heater is welded on the top of the box. At the bottom of the box, a tube is welded for inlet

of the gas from the purge tank. (the total cell is leak proof)

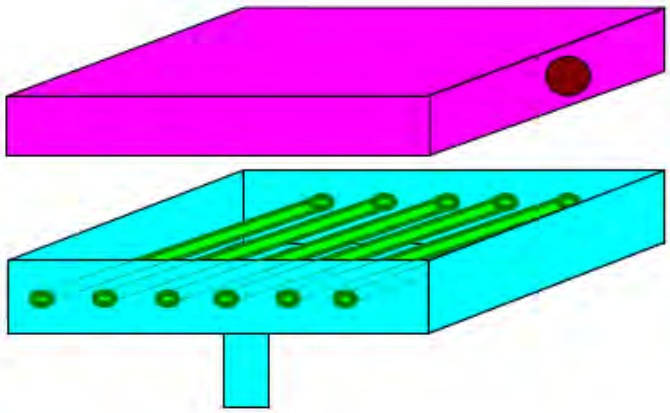

Working principle :

The palladium metal being placed in the top position of the electrochemical series, is very cathodic and has the tendency to **adsorb** hydrogen to its surface thereby the concentration of hydrogen on the outer surface of the tube is very high (see figure).

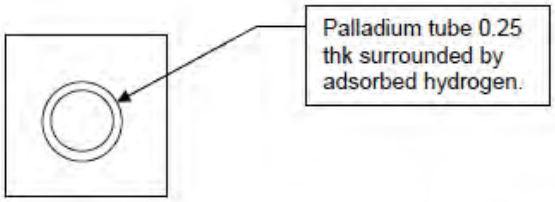

Then, hydrogen being the smallest molecule diffuses (atomic diffusion) through the walls of the tube and gets liberated.
Mechanism of atomic diffusion : Atoms / ions diffuse through solids by various mechanisms. The most common is vacancy diffusion. A metal crystal always contains large number of vacancies (Schotky defect, Frenkal defect). An atom or an ion sitting on a regular lattice site can diffuse by jumping to a vacant identical site nearby. For metal atoms, this is relatively easy

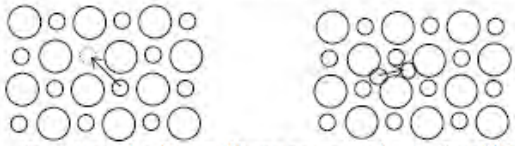

because the jump distances are short. Small interstitial atoms can readily jump from one position to another.

(a) Vacancy Diffusion (b) Interstitial diffusion

Function of Heater in the palladium cell :

The rate of diffusion is governed by Fick's laws which states that the rate of mass transfer is proportional to the concentration gradient. Mathematically,

$J = -D\,(\partial c/\partial x)$ Where J is the mass diffusing per sec through a unit cross section in the concentration gradient $(\partial c/\partial x)$; D is the diffusivity coefficient.

The diffusion coefficient is independent of orientation of the crystal lattice but temperature has a

major effect on the diffusion coefficient. D increases exponentially with increase in temperature.

Therefore the metal is sufficiently heated to increase diffusivity.

Precautions

. Outlet chilled water temperature goes up during the blowdown procedure and will go down when the refrigerant restarts. Blowdown operation is carried out when chilling requirement is not critical.
. Carry out refrigerant blowdown once a week.

Operating log

Record readings in accordance with the operating log at frequent intervals. These aid the operator to recognize both normal and abnormal chiller conditions and also aid in planning the preventive maintenance schedule and in diagnosing chiller problems. A typical operating log sheet is shown in the next page.

Re.	Items	Unit	Date : / /		
1.	Time	:	:	:	:
2.	Ambient temp.	°C			
3.	Chilled water flow rate	m^3/hr			
4.	Chilled water inlet & outlet temp.	°C (/)	/	/	/
5.	Chilled water inlet & outlet pressure	kg/cm^2g	/	/	/
6.	Cooling water flow rate	m^3/hr			
7.	Cooling water inlet & outlet temp.	°C (/)	/	/	/
8.	Cooling water inlet & outlet pressure	kg/cm^2g	/	/	/
9.	Generator temp.	°C			
10.	Absorbent pump pressure	kg/cm^2g			
11.	Absorber fluid level	O			
12.	Evaporator fluid level	O			
13.	Hot water inlet & outlet temp.	°C			
14.	Hot water inlet & outlet pressure	kg/cm^2g			
15.	Hot water flow rate	m^3/hr			
16.	Hot water control valve opening	%			
17.	Pressure in storage tank	mmHg			
18.	Pressure in shell	mmHg			
19.	Attained vacuum of purge pump	mmHg			
20.	Concentration of diluted absorbent	%			
21.	Concentration of conc. Absorbent	%			
22.	Concentration of refrigerant	%			

Operational activity Schedule	This section lists the operational activities in a schedule to be carried out on a daily, weekly, monthly, and quarterly basis.
Daily	.Check chilled water and cooling water flow rates. .Check hot water inlet temperature and pressure. .While the chiller is in operation the following may be observed - .No abnormality in the hot water control valve. .No abnormal sound in the absorbent, refrigerant and purge pumps. . No other abnormality.
Weekly	. Check oil in vacuum pump. . Air purging. . Blowdown refrigerant. . Check pH and hardness of chilled and cooling water.
Quarterly	. Measure and record current drawn by absorbent, refrigerant and purge pump. . Analyze and control chilled and cooling water quality.

Chapter 9
Commissioning

Chapter Objective

This chapter describes the various steps to be adopted for commissioning the chiller. It includes all the checklists that are to be filled up during pre-commissioning and commissioning stages.

Pre-commissioning & Commissioning

Several steps are to be followed during pre-commissioning stage and the commissioning stage.

Pre-commissioning

The pre-commissioning stage involves the following activities :-

1) Flushing of chilled water line (by isolating the chiller).
2) Flushing of cooling water line (by isolating the chiller).
3) Flushing of hot water line (by isolating the chiller).
4) Observation of N_2 pressure in the chiller
5) N_2 pressure testing at 1.2 kg/cm^2 g
6) Vacuum hold test at 6 mm of Hg (abs) for 24 hrs.
7) Panel testing
    a) Earthing
    b) Incoming voltage
    c) Transformer setting
8) Purge pump operation checking
    a) Presence of water in liquid trap
    b) Oil quality & quantity
    c) Rotating condition of the pump
    d) Noise level
    e) Vacuum level attained

Commissioning

The commissioning of the chiller should be done by the following sequence: -

1) Vacuumize of chiller and perform vacuum test for 24 hours.
2) Check all safety settings.
3) Charge LiBr and refrigerant.
4) Check all input parameters and ensure that all the input parameters are made available as specified.
5) Commission the chiller.
6) Stabilize the chiller and establish the performance.
7) Hand over the chiller to the Client

Chapter 10
Dos and Don'ts

Chapter Objective

This chapter describes various activities, which are to be carried out in the operation of the chiller and others, which should not be done.

Dos

Blow down refrigerant once a week.

Purge non-condensable gases from the purge unit, if the storage tank vacuum is more than 15 mm Hg.

Close the main hot water isolation valve after switching off the chiller.

Maintain inlet hot water temperature constant at rated value.

Check the Levels of octyl alcohol and corrosion inhibitor periodically.

Analyze chilled and cooling water every three months and maintain the quality of chilled and cooling water.

Ensure that cooling water flow stops one minute after the stopping the chiller.

Change the vacuum pump oil, if it is contaminated (white misty colour).

Charge nitrogen gas upto 0.3 kg/cm^2 (g) in the system for long shutdown of the chiller (i.e. more than a month). If the shutdown is for a shorter period (no need of charging the Nitrogen in this case), purge the chiller for 20 minutes, twice a week.

Ensure that the rated electric supply (3 phase) is available.

Always start the chilled water pump first and then the cooling water pump. Ensure that the rated chilled water and cooling water flows are passing through the chiller. Ensure that the hot water is available at rated inlet condition.

Don'ts

Don't open any of the valves of the purge unit without running the vacuum pump.

Don't disturb the setting of any instrument or safety provided on the chiller.

Don't put the refrigerant pump switch or the hot water control valve operational switch in MANUAL, during normal operation of the chiller.

Don't increase the overload setting of any motor, even if the overload alarm trips.

Do not run the vacuum pump continuously.

Do not let the temperature of cooling water fall below 22 °C Maintain it by stopping the cooling tower fan or by bypassing the cooling water into the cooling tower basin by installing a 3-way valve.

Don't decrease the chilled water flow below the specified value.

Chapter 10
Dos and Don'ts

Don't remove the bulb of the antifreeze thermostat from the thermowell provided. Ensure that the thermowell is always full of oil.

Don't run the cooling water pump if chilled water pump is not running.

Do not by pass or change setting of any safety devices or instruments

Chapter 11
Procedures

Chapter Objective

This chapter describes the various procedures to be carried out during the maintenance of the chiller.

List of Procedures

Charging solutions (absorbent and refrigerant).
Sampling absorbent.
Measuring absorbent concentration.
Absorbent analysis.
Calculating inhibitor (Li_2MoO_4) dose and charging.
Calculating alkali (LiOH) dose and charging.
Calculating acid (HBr) dose and charging.
Checking and adding octyl alcohol.
Charging Nitrogen gas.
Expelling Nitrogen gas.
Bubble test.
Checking insulation resistance.
Checking safety device operation.
Oil recharging in vacuum pump
Tube cleaning
Emergency Stop Procedure

Charging solutions (absorbent and refrigerant).

This section describes the procedure for charging absorbent and refrigerant into the chiller. (See Figure 12.1)

Equipment used

. Solution container (absorbent and refrigerant).
. Vacuum rubber hose.
. Copper tube
. Flared copper tube with nut.

Procedure (to be carried out when the chiller is off)

. Place solution containers near the service valve to be used for charging.
. Operate the vacuum pump and ensure vacuum level of 35mmHg abs or less inside the chiller.
. Clean the equipment.
. Connect the equipment as shown in the figure.
. Fill the rubber tube with distilled water to avoid air ingress into the chiller.
. Insert the copper tube on the end of the vacuum rubber hose into. the liquid container (keep the end of the copper tube slightly above the bottom of the container)
. Open the service valve using the slot in the cap.
. When solution starts being sucked into the chiller, watch carefully to ensure that air does not leak into the chiller.
. As the container starts becomes empty, tilt it so that air does not enter the tube as shown in the figure.
. Before the container become fully empty, bend the rubber vacuum hose with both hands to ensure that air does not leak in, and quickly insert it into the next container.

. Repeat the above steps till all the solution has been charged into the chiller.
. Once the required amount of solution has been charged, close the service valve.
. Remove the rubber vacuum hose from the service valve and put the cap back on the service valve.
. Stop the vacuum pump.
. Wash all the equipment with water and store carefully.

CHARGING SOLUTION

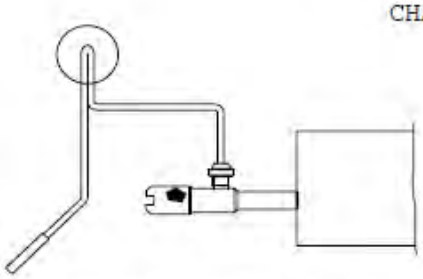

BENDING RUBBER VACCUM HOSE

METHOD OF CHARGING SOLUTION
AT BOTTOM OF CONTAINER

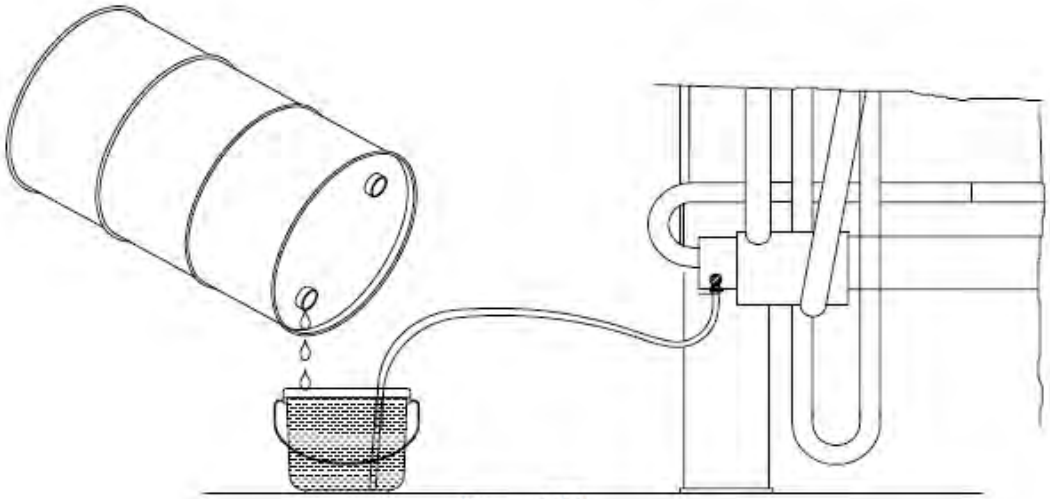

Figure 12.1

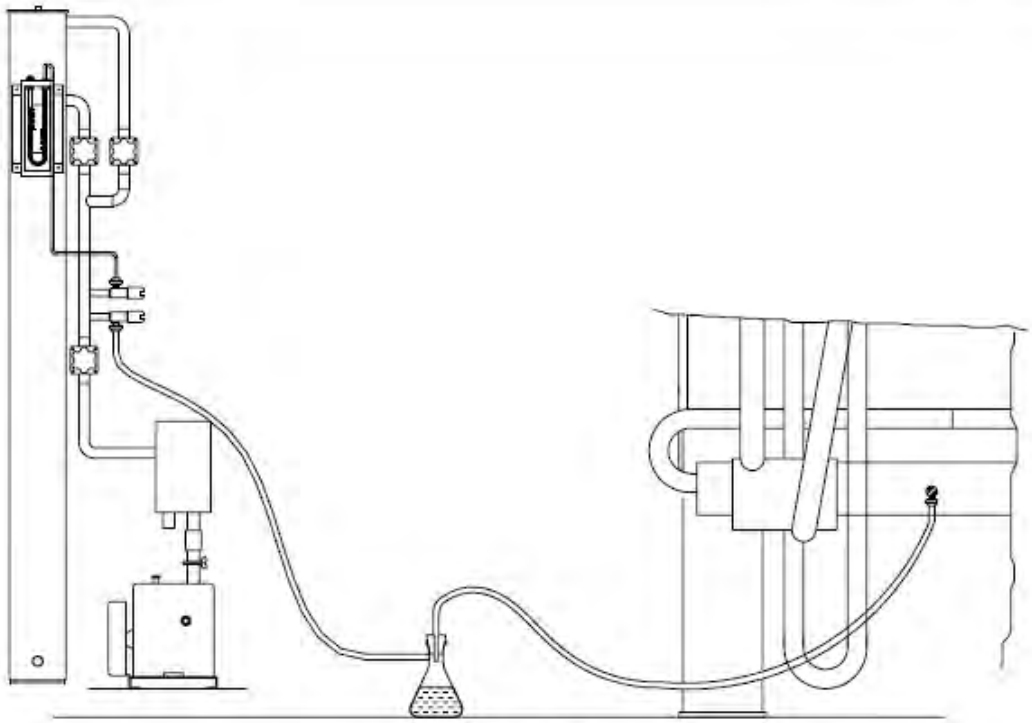

Figure 12.2

Precautions	. While charging solution, be careful to prevent spillage. . Because a vacuum exists inside the chiller, be careful to prevent air leaking in during the above work. . Carefully wash the hose used in the above work with water so as to prevent dirt ingress. . Wear rubber gloves (Do not handle equipment or solution with bare hands.) . Thoroughly wash off any absorbent which gets on skin or clothes. . Take care to prevent absorbent entering eyes or mouths. . If absorbent spills on metal plates, etc, thoroughly wash it off with water.
Method of sampling absorbent	This section describes the procedure for sampling small amounts of absorbent.
Equipment used	. Conical flask with nipple . Rubber hoses for vacuum . Rubber cork with copper tube . Copper tubes with one flared end and flare nuts
Procedure	. Operate purge pump . Open manual air-purge valve No.1. . Check vacuum less than 4mmHg . Connect equipment as shown in figure . Open up service valve No.1.

Chapter 11 Procedures	
	. Once final press. becomes below 4mmHg, close service valve No.1. . Close purge valve No.1. . Open the sampling service valve. . When sampling flask becomes full of absorbent, close the sampling service valve. . Remove the rubber cork from the conical flask and pour the absorbent into the measuring cylinder. . Measure concentration of absorbent. . Upon completion of measurement, remove all equipment. . Pour absorbent into another container, and wash all equipment with water. . Upon completion of above work, refit caps and gasket on all service valves. . Purge the chiller for 15 minutes after sampling is over. . Stop purge pump.
Precautions	Vacuum exists inside the chiller. Take care to ensure that air does not leak into the chiller. Handle all valves carefully so as not to damage them. Carefully wash equipment and rubber hose with water to remove dirt before using it in the above work. Do not discard the solution after measurement. Store it in an empty bottle and when it becomes full recharge the solution into the chiller. (See procedure for charging solution)
Measuring absorbent concentration.	This section explains the procedure to measure the concentration of absorbent and refrigerant. (See Figure 12.4)
Equipment used	. Sampling cylinder & solutions . Gravimeter (Scale of 1.6-1.8 for absorbent & 1.0-1.2 for refrigerant) . Thermometer . Concentration Diagram of Lithium Bromide Solution (Figure 12.3)

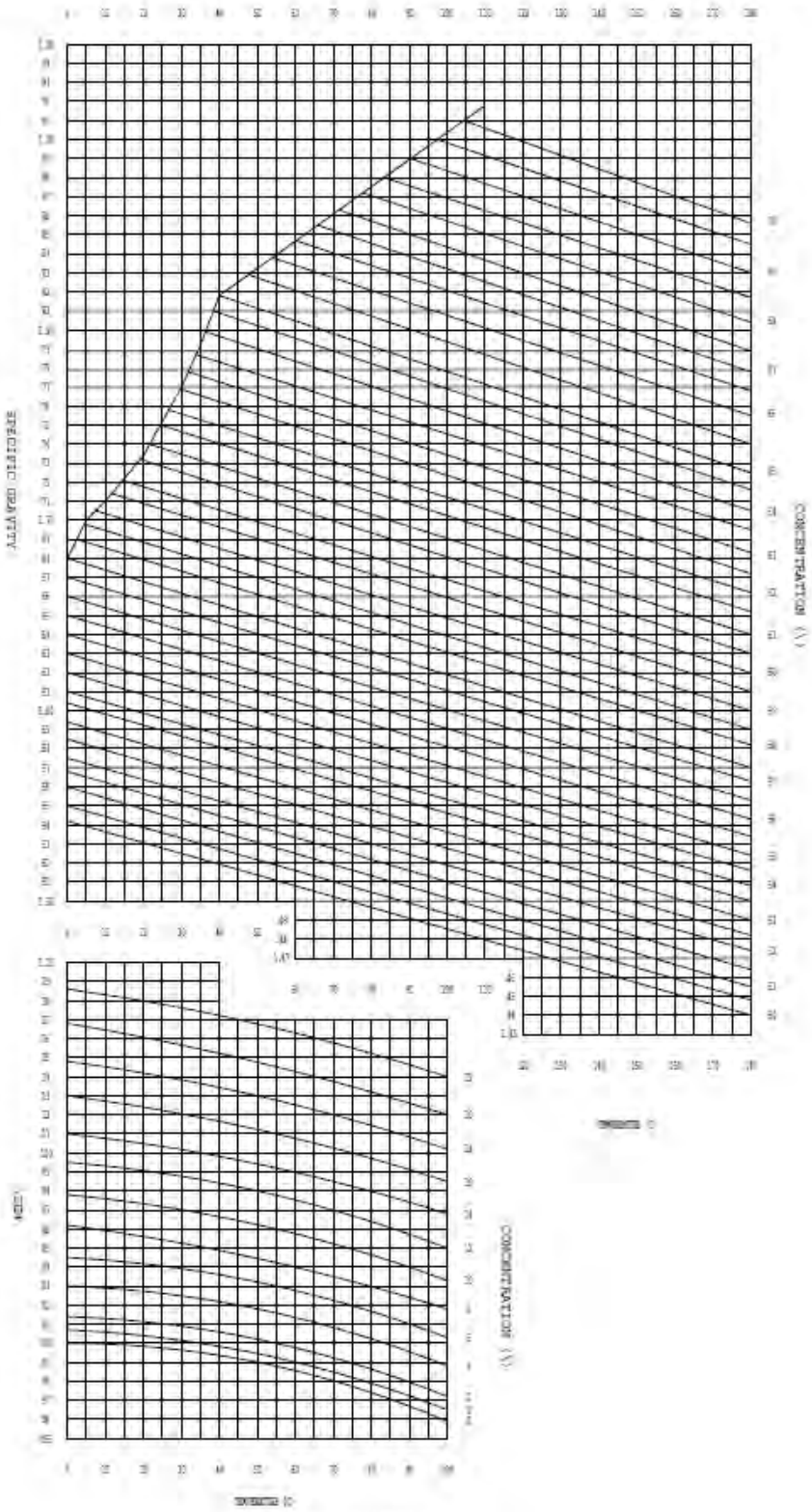

CONCENTRATION DIAGRAM OF
LITHIUM BROMIDE SOLUTION

MEASURING ABSORBENT CONCENTRATION

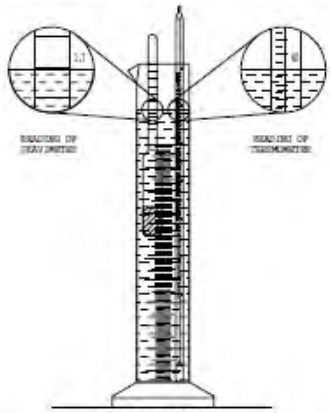

Figure 12.4

Procedure

. Fill sampling cylinder to about 80% with solution to be checked.
. Maintain sampling cylinder vertical and insert gravimeter.
. When the gravimeter stops moving up and down, read the indication on the scale.
. Remove the gravimeter from the measuring cylinder.
. Insert the thermometer into the cylinder and stir the solution thoroughly.
. When the temperature stabilizes, read the indication on the thermometer.
. Remove the thermometer.
. Store the solution in an empty bottle.
. Using the Concentration Diagram of Lithium Bromide Solution read the concentration.
. Upon completion of measurement, wash the gravimeter, thermometer, and sampling cylinder with water, and then store them carefully.

Example

In the concentration diagram the horizontal axis represents temperature and the vertical axis specific gravity. The lines going down from left to right represent fixed concentration. If the specific gravity is 1.77 and the temperature is 45°C, the concentration given by the point of intersection of lines projected from these valves will be 63

Precautions

Do not damage the gravimeter and thermometer.
Do not spill any solution.
Do not fill the sampling cylinder more than about 80%.
Perform specific gravity and temperature measurements quickly.

Absorbent (LiBr) Analysis

Analysis of the absorbent solution is done to determine the following
. Concentration of inhibitor (Lithium Molybdate).
. Alkalinity of the solution.

. Copper concentration. . Iron concentration.

Standard values		
	Inhibitor	150 PPM minimum.
	Alkalinity	0.01N ~ 0.07N
	Copper	250 PPM maximum
	Iron	250 PPM maximum

Concentration of inhibitor

The concentration of the Lithium Molybdate can be checked by "Atomic Absorption Spectrochemical Analysis". A sample of the absorbent solution is to be sent to a laboratory for analysis.

If the concentration of Lithium Molybdate is less than the standard refer to procedure for adding inhibitor.

Alkalinity of the solution

. A sample of absorbent is allowed to stand in a bottle for about 24 hours to decant the solution. (After 24 hours, solids accumulate at the bottom of the bottle.)
. Take 10 ml of absorbent solution from the top of the bottle using a pipette.
. Pour the sample absorbent solution into a beaker.
. Pour 50 ml of pure water into the beaker.
. Add Phenolphthalein (2~3 drops) into the beaker. (Absorbent solution turns pink).
. Add N/10 Hydrochloric acid solution drop by drop into the absorbent solution using a burette till the absorbent solution becomes colourless
. Calculate the Alkalinity using the following formula

$$N = A \times 0.01$$

where N : Alkalinity of the sample.
A : Quantity of Hydrochloric acid solution added (ml)

Procedures for adding chemicals

a. Alkalinity as 0.01N~0.07N : No addition.
b. Alkalinity is less than 0.01N : Refer to the procedure for adding LiOH.
c. Alkalinity is more than 0.07N : Refer to the procedure for adding HBr.

Concentration of Copper and Iron.

The concentration of Copper and Iron can be checked by "Atomic Absorption Spectrochemical Analysis". A sample of the absorbent solution is to be sent to a laboratory for analysis.
If concentration of the Copper and Iron are more than the standard valves, absorbent solution in the chiller is to be filtered.

Adding Inhibitor

This section describes the procedure to add inhibitor into the chiller.

Equipment used

. Inhibitor container (Lithium Molybdate).
. Vacuum rubber hose.

Chapter 11
Procedures

. Copper tube	. Flared copper tube with nut.
Procedure	. Connect the rubber hose to the refrigerant service valve using the flared copper tube with nut. . Push the other copper tube into the other end of the rubber hose. . Put pure water into the rubber hose and replace the air it with the pure water. . Put on rubber gloves. . Insert the copper tube on the end of the vacuum rubber hose into the inhibitor container. . Open up the refrigerant service valve. . When solution starts being sucked into the chiller, watch carefully to ensure that air does not leak into the chiller. . Close the service valve after charging all inhibitor. . Remove the rubber hose. . Place the cap on service valve after confirming the packing inside. . Wash the equipment with water. . Perform refrigerant blow-down after these procedures are completed and circulate the solution in the chiller. . Perform air purging from shell for 30 minutes.
Precautions	Carry out this procedure while the chiller operates. Wear rubber gloves while working. Thoroughly wash off any inhibitor which gets on skin and clothes. Take care to prevent inhibitor entering the mouth. Don't spill inhibitor on the floor and don't throw it into the drain.
Adding Alkali (LiOH)	This section describes the procedure of calculating the dose and adding Lithium Hydroxide (LiOH) into the chiller to correct the alkalinity to between 0.01N and 0.07N when the measured alkalinity is less than 0.01N.
Equipment used	. Solution container - 25 litre capacity . LiOH powder. . Rubber gloves . Pure water . Vacuum rubber hose. . Copper tube . Flared copper tube with nut.
Procedure	Calculate the LiOH dose using the formula below $X = \frac{1392000 \times (0.02 - A)}{LiBr\% + 38.6} \times B$ Where X : Required quantity of LiOH (g)

A : Measurement valve of alkalinity
B : Total amount of LiBr solution in the chiller (ton)

For example

A : = 0.005N
LiBr %= 56%
B = 3 (ton) see service data for quantity of LiBr in the chiller

$$X = \frac{1392000 \times (0.02 - 0.005)}{56 + 38.6} \times 3$$

$\therefore$ X= 662 g

. Attach the copper tube with a flare nut to the service valve on the absorbent pump outlet line.
. Connect the rubber hose to the copper tube on the service valve.
. Fit a copper tube to the free end of the rubber tube.
. Put the copper tube on the free end of the rubber hose into a container of about 25 litres capacity.
. Ensure that the absorbent pump is running and open the service valve.
. Close the service valve after about 20 litres of solution has been collected in the container.
. Dissolve the LiOH in the collected LiBr.
. Remove the flared copper tube and rubber hose from the absorbent pump outlet line.
. Pour pure water into the rubber hose.
. Connect the flared copper tube and rubber hose to service valve installed on strong solution side of low temperature heat exchanger using the flare nut.
. Insert the copper tube on the free end of the rubber hose into the container after wearing rubber gloves.
. Perform air purging.
. Open the service valve.
. When solution starts being sucked into the chiller, watch carefully to ensure that air does not leak into the chiller.
. Close the service valve after charging all solution.

. Remove the flared copper tube and rubber hose and wash inlet of service valve with water.
. Place the cap on service valve after checking the packing inside.
. Wash all equipment used with water.
. Continue air purging for 30 minutes after completing this work.

Precautions

. Perform this procedure while chiller is in operation.

. Inspect alkalinity after charging LiOH dose.

. Wear rubber gloves while carrying out the above procedure.

. Thoroughly wash off any LiOH which gets onto hands, skin and clothes

.Don't spill LiOH on the floor and don't throw it into the drain.

Adding Acid (HBr)

This section describes the procedure of calculating the dose and adding Hydrogen Bromide (HBr) into the chiller to correct the alkalinity to between 0.018N and 0.022N when the measured alkalinity is more than 0.1N.

Equipment used

. Solution container - 60 litre capacity
. HBr solution (Concentration : 47%).
. pH test paper
. Rubber gloves
. Mask
. Pure water
. Vacuum rubber hose.
. Copper tube
. Flared copper tube with nut.

Procedure

Calculate the HBr dose using the formula below.

$$X = 6800 \times \frac{(A - 0.02)}{LiBr\% + 38.6} \times 8$$

Where

X : Required quantity of HBr (l)
A : Measured valve of alkalinity
B : Total amount of LiBr solution in the chiller (ton)

For example

If A = 0.12N
LiBr% = 56%
B = 3 (ton)

Then

$$X = 6800 \times \frac{(0.12-0.02)}{56 + 38.6} \times 3$$

$\therefore X = 21.6$ (l)

. Perform air purging.
. Attach the copper tube with a flare nut to the service valve on the absorbent pump outlet line.
. Connect the rubber hose to the copper tube on the service valve.
. Fit a copper tube to the free end of the rubber tube.
. Put the copper tube on the free end of the rubber hose into a container of about 25 litres capacity.
. Put on rubber gloves and mask.

. Ensure that the absorbent pump is running and open the service valve.
. Close the service valve after about 60 litres of solution has been collected in the container.
. Pour HBr little by little into the solution collected.

. Keep checking the pH of this solution by pH test paper. (Allowable degree of pH is 6)
Stop pouring HBr when pH of this solution becomes 6.
. Remove the flared copper tube and rubber hose from the absorbent pump outlet line.
. Pour pure water into the rubber hose.
. Connect the flared copper tube and rubber hose to service valve installed on strong solution side of low temperature heat exchanger using the flare nut.
. Insert the copper tube on the free end of the rubber hose into the solution container
. Open the service valve.
. When solution starts being sucked into the chiller, watch carefully to ensure the air does not leak in.
. Close the service valve after charging all solution.
. Repeat the steps and charge the required quantity of HBr solution into the chiller
. Remove the rubber hose and wash inlets of service valves used with water.
. Place the caps on service valves after checking packing inside.
. Wash equipment used with water.
. Continue air purge for 30 minutes after end of this procedure.

Precautions

Perform this procedure while chiller is in operation.
Inspect alkalinity after charging HBr dose.
Wear rubber gloves while carrying out the above procedure.
Thoroughly wash off any HBr which gets onto hands, skin and clothes.
Don't spill HBr on the floor and don't throw it into the drain.

Charging Nitrogen Gas

This section deals with the method of charging the chiller with N_2 gas. (See Figure 12.5)

Equipment used

. N_2 gas cylinders required for one complete charge.
. Pressure regulator for N_2 cylinder
. Valve key (for nitrogen cylinder)
. Pressure resistant rubber hose
. Hose band
. Pliers
. Wire

Standard

The charging pressure is read on the pressure gauge on the absorbent pump outlet line.

(a) For storage of chiller	: 0.2 Kg/cm^2g
(b) For leakage test	: 1.0 Kg/cm^2g
(c) For equipment replacement	: 0.1 Kg/cm^2g

Procedure

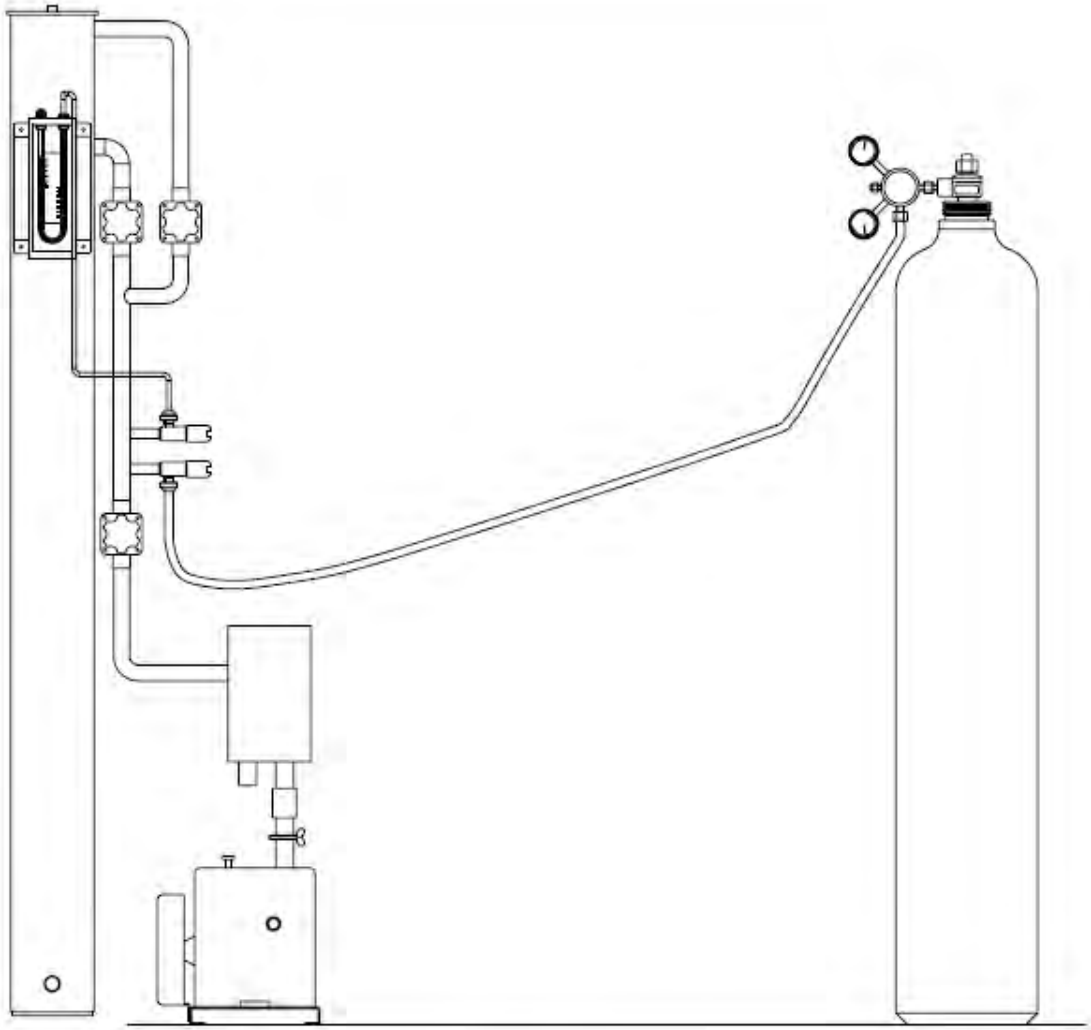

Figure 12.5

Precautions	The N_2 cylinder is pressurized to 150 kg/cm^{2}g. Take care when handling it. Do not suddenly raise the primary or secondary pressure of the pressure regulator on the N_2 cylinder. Fix the N_2 cylinder so that it does not fall over. On no account open No.1 and No.3 manual air-purge valve during N_2 charging.
Expelling Nitrogen Gas	This section describes the procedure of expelling nitrogen from the chiller.
Equipment used	. None
Standard	Shell pressure to equal atmospheric pressure, (0 kg/cm^{2}g) based on reading of absorbent pump pressure gauge.

Procedure	. Open No.3 manual air purge valve.. Remove the cap from service valve and open the valve using the slot on the valve cap so as to discharge the N_2 until the internal pressure becomes equal to atmospheric pressure. . When the reading on the absorbent pump pressure gauge becomes atmospheric pressure (0 kg/cm^2g), close the service valve.
Precautions	. Do not on any account open No.1 and No.2 manual air-purge valve while N_2 gas is being discharged from the chiller . When expelling N_2 gas, adequately ventilate the surrounding area.
Bubble test	This section describes the procedure for carrying out the bubble leak test. (see Figure 12.6)
Equipment used	Graduated cylinder Vinyl hose (2m) Bucket Putty Stop watch
Standard	Leak test shall be performed during shutdown of the chiller. Average of three measurements should be less than 15 cc in 10 minutes.
Procedure	. Perform air purging until the inside pressure of the chiller reaches the allowable degree of vacuum, and then continue air purging at least for one hour. . Make sure that the no load vacuum of the purge pump is under 4 mmHg. . Connect the vinyl hose to the exhaust port of purge pump and put its other end into the bucket filled with water as shown in the figure . Diaphragm valves should be set as follows Valve No.1 Open Valve No.2 Close Valve No.3 Close . Operate purge pump for about one minute and then measure the bubble volume. . While measuring keep the vinyl hose within a depth of 10mm from the water surface. . If bubbles are collected, inspect and tighten downstream connections from the diaphragm valves. . If bubbles are still collected in spite of the above tightening, measure the volume of bubbles collected in 10 minutes. . Call this volume A Then set the diaphragm valves as follows Valve No.1 Open Valve No.2 Close Valve No.3 Open . Gas ballast valve and oil delivery valve should be kept closed.

. Continue operation of purge pump under the above conditions.

When is bubble leak test performed?

. Measure the volume of bubbles in 10 minutes and call this volume B.

. Measurement should be performed at least three times.

. Between measurements, check that the no load vacuum of purge pump is under 4mmHg.

. The value of (B-A) is the result of the bubble leak test.

. If the oil is contaminated with water, carry out Dewatering procedure.

. As part of the leak test after assembly work at site.

. As part of the periodical inspections.

. After carrying out site procedures, which break vacuum tightness, and after N_2 leak test.

Precautions

. Ensure that the no load vacuum attained by the vacuum pump is less than 4mmHg. If the no load vacuum of purge pump is above 4mmHg carry out. Dewatering procedure or maintenance of the purge pump.

BUBBLE TEST

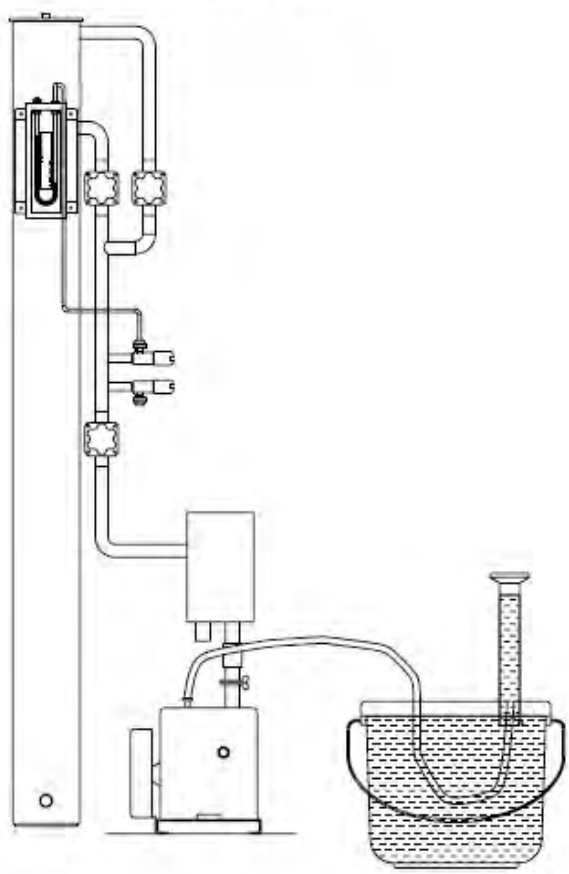

Figure 12.6

Measuring Insulation Resistance	. This section describes the procedure of inspecting whether the insulation resistance of power and control circuit is normal or not.
Standard	a. Power circuit : Above 10 b. Control circuit : Above 10
Equipment used	. Megger DC 500 V Driver
Procedure	. Do not supply electricity power in this measurement. . Disconnect green earth wire between terminal E on terminal base and earth terminal in control panel. . Make sure that MCB is not put on. . Connect earth wire of Megger to earth terminal in control panel. . Measure insulation resistance at terminals of R, S, T, U1, U2, U3, V2, V3, W1, W2, and W3. . Measure insulation resistance at terminals of "No.0". . Record the above measured valves.
Precautions	. This measurement is to be performed after replacement of electrical components and inspection of solution pumps.
Inspection of safety devices	. This section describes the procedure to inspect the functioning of safety devices independently. These are Chilled water flow switch. Chilled water freeze protection thermostat. Generator temperature switch.
Equipment used	. Continuity Tester . Bucket (about 5 liters capacity) . Water . Ice Blocks . Hot water (80 - 90°C) . Thermometer (0 - 100°C) . Electric wire (5m x 2)
Chilled water flow switch.	. Disconnect two wires connected to terminals strip in the control panel from the flow switch. . Connect the tester between the above disconnected two wires. . Set the tester to measure resistance. . Operate chilled water pump(s). . Close the valve furnished at delivery piping of chilled water pump gradually to reduce chilled water flow rate. . Inspect that the indication of the tester becomes infinity at 50% of the specified chilled water flow rate. . If mis-setting is done, re-adjust the flow switch. . If flow switch is broken, replace the flow switch.
Chilled water freeze protection thermostat	. Connect the tester between the above disconnected two wires.

Chapter 11 Procedures	
	. Disconnect two wires connected to terminal strip in the control panel from the chilled water freeze protection thermostat. . Set the tester to measure resistance. . Pour water in the bucket by about half. . Pour water in the bucket by about half. . Dip the sensor of the thermostat in the mater. . Put ice blocks in the water. . Read the temperature by the thermometer when the indication of the tester becomes infinity due to the reducing temperature of the water. . Set point : 3.5°C . Take out ice blocks from the water. . Pour hot water in the water. . Inspect that the indication of the tester becomes [0] due to the rising temperature of the water. . If mis-setting is noted, re-adjust the thermostat. . If thermostat is broken, replace the thermostat.
Generator temperature switch	. As it is difficult to inspect the generator thermometer at 100°C using water, the inspection is done by a simulation test by adjusting the set point to 70°C. . Disconnect two wires connected to terminals (2) and (1) on the terminal strip of the generator thermometer. . Connect the tester between the above two terminals. . Set the tester to measure resistance. . Put on circuit breaker (MCB) . Pour water in the bucket by about half. . Dip the temperature sensor dismantled from high temperature generator into the water. . Pour hot water into the bucket gradually. . Read the indicated temperature on the generator thermometer and the thermometer when the indication of the tester becomes [0] due to the rising temperature of the water. . Put ice blocks in the water. . Check when the indication of the tester becomes infinity due to the reducing temperature of the water. . If mis-setting is done, re-adjust the generator thermometer. . If generator thermometer is broken replace the generator thermometer.
Precautions	Stir the water to get the average temperature in the bucket during measurement.
Tube Cleaning	. This section describes the procedure to clean the water tubes. These are Chilled water tubes in the evaporator. Cooling water tubes in the absorber and condenser Hot water tubes in the generator
Equipment used	. Cleaning brush . Cleaning agent . Water

. pH meter .

Overall Method

The methods for cleaning operation can be broadly categorized as –

A) Mechanical CleaningChemical Cleaning

Mechanical cleaning is done by flushing water through the tubes at high pressure. Brushes are also used to take out the scales.

In case of sever scaling, chemical cleaning may be required. There are two methods of chemical cleaning, which are as follows :-

Method - 1

. Clean water, using cleaning agent (chemicals).
. Drain the water. The water is to be neutralized while draining. pH of the water should be checked to ensure that the water standard for sewerage is complied with, while draining the water.
. Clean the line with water. This is to be repeated for 3 to 5 times.
. Drain the water. PH and transparency of the drained water should be checked to confirm proper cleaning. In case the outgoing water does not meet the pH level and the expected transparency, cleaning with water is to be continued, till the desired result is achieved.
. After draining the water, visual checking should be done to check the degree of cleaning. It should be checked, whether brush cleaning is necessary or not. If brush cleaning is required, then cleaning is to be done, using nylon brush.
. After visual checking, water should be circulated throughout the cooling water system. Cleaning should be done using water by continuous blowing for 2 hours or more. On completion of cleaning with water, tubes should be filled with water.
. Alkaline water (pH 8 or 9) should be used. A rust preventive agent may be used to preserve the tubes. If chances of water freezing are there, then water tubes should be filled with water of pH 8 or 9.
. Leave the unit in this state for 5 to 6 days before draining out the water. Open the water header and introduce rust preventive to extend the life of the tubes.

Method - 2

. Clean the tubes, using cleaning agents.
. Measure the amount of an alkaline agent required for neutralization.
. Perform neutralization operation. Circulate for 30 to 60 minutes and neutralize the water to pH of 6 to 8.
. Check pH to confirm neutralization and drain out the water.
. After draining the water, visual checking should be done to

check the degree of cleaning. It should be checked, whether brush cleaning is necessary or not. If brush cleaning is required, then cleaning is to be done, using nylon brush.

. After visual checking, water should be circulated throughout the cooling water system. Cleaning should be done using water by continuous blowing for 2 hours or more.
. On completion of cleaning with water, tubes should be filled with water.
. Alkaline water (pH 8 or 9) should be used. A rust preventive agent may be used to preserve the tubes. If chances of water freezing are there, then water tubes should be filled with water of pH 8 or 9.

. Leave the unit in this state for 5 to 6 days before draining out the water. Open the water header and introduce rust preventive to extend the life of the tubes.

Precautions

. The adhesion state of the scale is to be checked prior to cleaning.
. A sample of the scale is to be collected and dissolving tests of the scale to be performed, using various cleaning agents. The cleaning agent is to be determined accordingly
. Cleaning agent should be alkaline in nature. A hydrogen peroxide based agent or organic agent can be used.
. Drainage method should be determined as per the sewerage norms of the particular place. Hydrogen peroxide based cleaning solution should not be drained to a purificatory cistern or activated sludge treatment system.
. If cleaning is to be done, using a flouride based cleaning agent, then the cleaning operation should be done by a specialist.
. The cleaning solution should be taken out of the chiller, before neutralization and draining operations are started.
. If Method – 2 is used for cleaning, there are chances of sludge remaining after neutralization, if only chemicals are used. In that case, brushing should be done to remove the sludge along with the scale, after neutralization.

Emergency Shutdown

In case of any noticeable leakage or electrical/operational problem which can lead to hazardous condition, the chiller should be stopped immediately

Method

The following procedure should be adopted for emergency shutdown –

- Stop the chiller
- Stop the cooling water flow

- Stop the chilled water flow
- Complete the dilution cycle
  Check vacuum level in the chiller and refer the troubleshooting section of this manual, in case the vacuum level is not within the limits. In case the problem persists, contact nearest Thermax Service Centre

Chapter 12
Preventive Maintenance

Chapter Objective

This chapter details the schedule of the various preventive maintenance procedures to be carried out. Preventive maintenance ensures best performance and long life of the chiller.

Quarterly maintenance procedures

Following activities are to be carried out every three months -

. Check and record working of all the safeties and their settings. Reset or replace the safety device, as required.
. Check all the set point values on the control panel.
. Check and record the current drawn by absorbent, refrigerant and purge pump.
. Analyze the Lithium bromide solution and maintain the corrosion inhibitor level and alkalinity. Charge corrosion inhibitor, if required. Charge alkali or acid, if required to maintain the desired parameters of lithium bromide.
. Check for the presence of octyl alcohol. Charge octyl alcohol, if required.
. Check and maintain the cooling and chilled water quality.

Annual maintenance procedures

Following activities are to be carried out once in a year -

. External visual inspection of the chiller for any damage. If any safety device is missing / damaged, replace the same.
. Conduct nitrogen leak test on the chiller. If any leak is detected, rectify the leak point.
. Replace all the diaphragms on the diaphragm valves.
. Check for any scaling / slime in the absorber, condenser and evaporator tubes. Carry out the tube cleaning, if required.
. Overhaul the absorbent and refrigerant pump.
. Check and record the working of all the safeties. Reset or replace the safety device, as required.
. Check all the set point values in the control panel.
. Check and record the insulation resistance.
. Overhaul the purge pump and clean the moisture trap on the purge line.
. Conduct bubble test on the chiller.
. Clean the seat of the hot water control valve.

Maintenance for long term shut down

This section describes the activities to be carried out during the long-term shut down of the chiller.

Make sure that the hot water control valve is closed and there is no circulation of cooling and chilled water through the chiller.

In case the shutdown is for one week or more, perform either:

A. Perform air-purging once a week, to maintain the required vacuum in the chiller.
B. If the shutdown is for a period more than three weeks, charge nitrogen gas into the chiller up to a positive pressure of 0.3 kg/cm^2 (g). No air purging required in this case.

Water circuit preparation for long term shutdown

Water circuit preparation is done for
Absorber and condenser section and
Evaporator section.

Absorber and condenser section

The absorber and condenser tubes should be kept dry.

. Drain out all the water from the absorber and condenser from the drain port of the absorber header.
. Carry out tube cleaning to remove any scale or slime in the absorber and condenser tubes.
. Clean the tubes with water.
. Add anti-corrosion chemicals to water and circulate it in the absorber and condenser circuit.
. Drain the water from the tubes.
. Dry the inside surface of the tubes.

Evaporator section

The evaporator tubes should be kept full with water.

If the chiller is located at a site where the ambient temperature will be below freezing point of water, drain out all the chilled water and dry the evaporator tubes.

Chapter 13
Troubleshooting

Chapter Objective

This chapter describes how to troubleshoot the chiller.

Trouble shooting categories

The various types of problems encountered during chiller operation can be classified as below

Problems without alarm indication –

The problems without alarm indication are

- Chiller does not start.
- Leaving chilled water temperature does not reach set point.
- Leaving chilled water temperature is rising day by day.
- Large fluctuation in the chilled water outlet temperature.
- Hot water control valve does not close when the desired chilled water outlet temperature is achieved.

Problems with alarm indication –

These problems occur when the chiller is in operation. In case any of the following problems occur, the chiller executes the appropriate alarm sequence with audio-visual indication.

- Chilled water flow/Temperature Low Trip
- Generator temperature high.
- Cooling water inlet temperature very low.
- Refrigerant pump tripped.
- Absorbent pump tripped.

Action in case of interrupted power supply.

Jamming of purge pump

De-crystallization

Tube Failure

Air ingress in the chiller.

Problems without alarm indication

These problems may occur either when the chiller starts or during operation of the chiller.

Chiller does not start.

In case the chiller does not start up, check the following:

Are the chilled water and cooling water pumps running? If not, operate the pump(s).

Are the inlet and outlet valves of the chilled water and cooling water on the chiller open? If not, open the valve(s).

	Check if the chilled water flow rate is sufficient. If not, do the following : If the strainer in the chilled water circuit is clogged, clean the strainer in the chilled water circuit. Is air accumulated in the chilled water circuit? If yes, vent out the air from the chilled water circuit. Maintain the proper chilled water flow across the chiller.
Chilled water temperature is not dropping.	In case the leaving chilled water temperature is not dropping, check the following - Are the auxiliary equipments ON? Is the refrigerant pump in 'AUTO' mode? If not, put the refrigerant pump in 'AUTO' mode. Other causes for not achieving the desired chilled water temperature are - Insufficient vacuum. Insufficient hot water flow rate. Insufficient cooling water supply. Cooling water inlet temperature higher than the design temperature. Refrigerant pump not operating. Chilled water flow rate higher than rated.
Leaving chilled water temperature is rising day by day	In case the chilled water temperature is rising over a period of time, confirm that all the inlet parameters to the chiller are being maintained in accordance with the specified values. Check the following causes -
Fouling of cooling water and / or chilled water circuit	Fouling in the cooling water and / or chilled water circuit accumulates in proportion to the operating hours of the chiller and the capacity decreases in proportion to the fouling. Occurrence of fouling can be observed by noticing the pressure difference across the evaporator for chilled water circuit and across the absorber and condenser for cooling water circuit of the chiller. If the pressure difference across the respective heat exchanger increases as compared to the original value with the chilled water and cooling water flows remaining constant, it indicates scaling in the respective circuit. Fouling in the cooling water tubes can also be confirmed by comparing the temperature difference between the cooling water outlet and condensed refrigerant. If the difference is more than 3°C, it indicates scaling in the cooling water tubes. Fouling in the chilled water tube can be confirmed by observing the temperature difference between the chilled water outlet temperature and the refrigerant temperature on the outlet of the

	refrigerant pump line. In case the temperature difference exceeds 3°C, it indicates fouling in the chilled water tubes. Perform tube cleaning of the chilled water and / or cooling water tubes as required.
Mixing of absorbent solution in the refrigerant	A very small quantity of absorbent may get dispersed in the refrigerant and accumulate during the operation of the chiller. It causes reduction in the capacity of the chiller. Perform refrigerant blow down to generate fresh refrigerant.
Insufficient octyl alcohol	Insufficient quantity of octyl alcohol in the chiller will cause a reduction in the capacity of the chiller. If there is no smell of octyl alcohol in the exhaust from the purge pump, octyl alcohol is insufficient. Charge the required quantity of octyl alcohol into the chiller. The charge volume of octyl alcohol is 1.1 litres / 1,000 kgs of LiBr (55 % by weight). Excessive addition of octyl alcohol will affect the absorbent circulation. Hence charge octyl alcohol in small quantities and observe the change in capacity of the chiller. Do not charge excess quantity of octyl alcohol into the chiller.
Large fluctuation in the chilled water outlet temperature	The reasons for large fluctuation in the chilled water outlet temperature are - Variation in chilled water flow. Check and maintain the required flow. Variation in load. Check and maintain a constant load on the chiller. Incorrect setting of PID values. Check and correct the required PID values as per the set point data-sheet.
Hot water control valve does not close when the chilled water outlet temperature crosses the set temperature	If the hot water control valve does not bypass the flow, when the desired temperature of chilled water is achieved, check and correct the chilled water set point.
Problems with alarm indication	If the chiller is in operation and any of the following problems occur, the chiller stops with an audio alarm and a suitable visual alarm on the panel view operator terminal screen. The probable cause and remedy for the warning stop are given in the next page.

Description of alarm	Probable cause	Remedy
Chilled water flow / Temperature low trip alarm	Chilled water pump stopped / tripped.	Check the chilled water pump for mechanical and electrical faults. Rectify the same and maintain the required flow.
	Inadequate chilled water flow rate.	Check the strainer in the chilled water circuit, and clean if necessary. Check that the chilled water inlet and outlet valves are open.
	Malfunction of chilled water DP switch.	Replace / rectify the DP switch
	Accumulation of air in the chilled water circuit.	Perform air venting from the chilled water circuit.
	(*) Sudden reduction of chilling load.	Do not reduce the chilling load suddenly.
	(*) Inadequate chilled water flow rate.	Check the strainer in the chilled water circuit, and clean if necessary. Check that the chilled water inlet and outlet valves are open.
	Main setpoint of chilled water is too low.	Reset the chilled water set point to a higher value.
	(*) Malfunction of antifreeze thermostat.	Replace antifreeze thermostat.
	Setpoint of L cut is too low.	Reset the L cut setpoint to a higher value.
Generator temperature high.	High cooling water inlet temperature.	Check the setting of cooling water tower fan thermostat, and reset if required. Check the feed water system of cooling tower. Check and clean the cooling tower.
	Excessive hot water supply.	Check and adjust the supply hot water flow. Check the opening of hot water control valve. Check the operation of hot water control valve.
	Fouling in the absorber and condenser tubes.	Check for fouling in the absorber and condensor tubes and carry out tube cleaning if required.
	Setpoint of Generator temperature / pressure is not correct.	Check and reset the settings.
	Air leakage into the chiller.	Perform Nitrogen leak test and rectify the leak point.
	Inadequate cooling water flow rate.	Check the operation of the cooling water pump. Check that the cooling water inlet and outlet valves are open. Check and vent out the air in the cooling water line. Check and clean the strainer in the cooling water line.

Description of alarm	Probable cause	Remedy
Cooling water inlet temperature very low.		Check and maintain the cooling water flow rate.
	Malfunction of cooling water tower fan cutout thermostat.	Check, and replace if necessary.
	Setpoint of cooling water tower fan cutout switch is too low.	Reset the set point of the cooling water fan cutout thermostat to a higher value.
Refrigerant pump tripped. Absorbent pump tripped.	Pump drawing overcurrent because of either - Single phasing.	Check and ensure proper power supply
	Severe crystallisation.	Decrystallise the chiller
	Setpoint of overload relay is too low.	Reset the set point to a higher value.
	Malfunctioning of overload relay.	Check, and replace the overload relay if required

- Restart the chiller only after the fault has been rectified.
- Whenever any safety device is replaced, make sure that the electrical connections are done correctly.
- Check and tighten any loose connection in the control panel and on the safety device.

Action in case of interrupted power supply during operation

If the power supply to the chiller is interrupted, switch off the chiller immediately. Make sure that the hot water control valve is closed.

If the power supply is resumed within half an hour, immediately start the chiller and maintain the appropriate inputs to the chiller.

If the power is interrupted for longer then half an hour, carry out the following activities -

. Start the chiller and stop it, to put the chiller into dilution cycle.
. Start the chiller and check for crystallisation. If there is no indication of crystallisation, operate the chiller.
. If there is any indication of crystallization, perform decrystallisation and then operate the chiller.

Power cut during purging operation of the chiller

If the power is interrupted when the air-purging of the chiller is in progress, immediately close manual purge valve no.1, and then close the other manual purge valves. As soon as the power is resumed, operate the purge pump and continue air purging.

Jamming of the purge pump

If the absorbent solution is forced into the purge pump by the incorrect operation of charging or discharging Nitrogen gas, the absorbent solution causes jamming of the purge pump.

.If the quality of purge pump oil is not proper and contains too much contamination, the purge pump may become jammed. Charge fresh oil in the purge pump as below.

. Drain out the contaminated oil from the purge pump.
. Charge kerosene oil in the purge pump and operate it for a few seconds.
. Drain the kerosene oil from the purge pump.
. Charge purge pump oil in the purge pump and operate the purge pump for some time.
. Drain the oil and recharge fresh purge pump oil.

Now the pump is ready for usage.

Precautions for operation of purge pump.

Always charge fresh purge pump oil in the purge pump for long term shut down.
After a long term shut down or in the cold season, rotate the pulley of the purge pump manually several times before starting the purge pump.

De-crystallization

This section describes the de-crystallization procedure.

What is crystallisation ?

Crystallisation is the condition when lithium bromide solidifies. This occurs when the temperature of LiBr solution goes below the crystallisation temperature. (Refer to the concentration diagram of LiBr solution.) The crystallisation line for LiBr solution with reference to various temperatures and concentrations can be seen. If the concentration of LiBr solution is 68.5%, then the crystallisation temperature is 85°C, i.e. if the temperature of LiBr solution with 68.5% concentration falls below 85°C, then LiBr tends to form solid crystals. Similarly, if the concentration of LiBr is 63%, the crystallisation of LiBr will occur if the temperature of LiBr falls below 32°C.

LiBr flows through various pipes of the chiller at different concentrations and temperatures. If the solution condition goes beyond the crystallisation line, then crystals formed will block the flow of the solution, thereby affecting the performance of the chiller. Crystallisation usually occurs at the concentrated absorbent solution outlet of the heat exchanger.

Causes of crystallisation

Crystallisation occurs when the following conditions occur :
i. Cooling water inlet temperature too low.
ii. Insufficient vacuum in the chiller.
iii. Excessive hot water supply.

iv. Insufficient absorbent flow rate.
Hence it is of utmost importance that the input conditions to the chiller are maintained in accordance with the design parameters.

Symptoms of crystallisation

When crystallisation occurs, the following can usually be observed :

- Absorbent level drops rapidly. This can be observed from the absorber sight glass.
- Evaporator level increases. This can be observed from the evaporator sight glass. Overflow of refrigerant from the refrigerant pan to the absorber sump takes place.
- Overflow of concentrated absorbent takes place from the generator to the absorber, bypassing the heat exchanger and the overflow line becomes hot.
- Temperature of dilute solution delivered from the absorbent pump increases.
- Chilled water outlet temperature rises.
- The outlet line of concentrated solution from the heat exchanger becomes cold.

Procedure for decrystallisation

- Change the position of hot water control valve from 'AUTO' to 'MANUAL'. Bypass the hot water flow through the bypass port of the control valve, stopping the hot water flow into the chiller.
- Change the position of refrigerant pump from 'AUTO' to 'MANUAL' and put it 'ON'.
- Open the refrigerant blow down valve and transfer the refrigerant to refrigerant pan directly to the absorber sump.
- When the refrigerant pump gives abnormal noise, switch off the refrigerant pump.
- Stop the chiller operation.
- After 20 minutes of dilution cycle is over, stop the chilled water and cooling water flow through the chiller.
- Switch off the (MCB) incoming power supply to the control panel of the chiller.
- Supply power to the chiller control panel.
- Start the chilled water flow through the chiller.
- Start the chiller and operate it by manually controlling the input hot water. Raise and maintain the temperature of dilute lithium bromide solution from the absorbent pump to around 50 - 60°C. Continue this operation for about 2 - 3 hours. If required the duration should be extended.

In case the crystallisation is intense, perform the following activities along with the above steps.

Charge pure water from the service valve furnished at the concentrated absorbent side of low temperature heat exchanger.

Heat the portion where crystallisation has occurred and the surrounding area externally, with a gas or oil torch.

Confirmation for decrystallisation

Check if the de-crystallization is successful by observing the following

- No flow of concentrated absorbent through the overflow pipe. This can be confirmed if the temperature of overflow pipe goes down.
- LiBr level in the absorber rises. This can be observed from the absorber sight glass.
- Temperature of concentrated absorbent at the outlet of the heat exchanger rises.

After de crystallisation is successful

After the de crystallisation is successful, carry out the following

- Change the position of chiller operation to STOP.
  After 20 minutes of dilution cycle is over, the chiller and the chilled water flow are stopped completely.
  Change the position of refrigerant pump from 'MANUAL' to 'AUTO'.
- Change the position of hot water control valve to 'AUTO'.
- Locate and remove the cause of crystallisation and run the chiller.
- Observe the operating condition of the chiller for sometime, after restarting the chiller, so as to confirm that de-crystallization process was successful.
- In case water was added during the de-crystallization work, remove the water from the chiller. Water is removed from the service valve furnished on the refrigerant outlet piping, by using a small pump.

However, in case only a small amount of water has been added, it has no affect on the capacity of the chiller and the removal of water is not necessary.

Tube Failure

This section describes the troubleshooting procedure in case of tube failure.

Causes of tube failure

Following are the sequence of events, which are the symptoms of tube failure: -

1) Ice Formation

Sequence of events

- Load is high
- LiBr concentration high
- Chilled water flow stops
- Chilled water safeties become inoperative

- Cooling water flow continues
- Lower shell pressure drops steeply
- Refrigerant clinging to the tubes goes to sub zero temperature
- Water inside the chilled water tubes freezes
- Central ice formation takes place
- Tube cracks
- Chilled water flow starts
- Ice melts and water goes inside the chiller

1) Corrosion

Tube side
- Corrosive substance in chilled water.

Shell side
- Depletion of inhibitor
- Copper corrosion

1) Erosion

- No strainer in the water line. Foreign materials pass through the chilled water tubes and scratch the inside surfaces. As a result, tubes fail.
- Flushing of water line not done during commissioning. So, foreign materials are present, which scratch the inside surfaces of the tubes. Consequently, tubes fail.

1) Tube Defect

In case of Cu tubes
- Inclusion in the tube. Opens up during operation.

Procedure of repair

Following are the steps to be followed for repairing: -

1) Charge Nitrogen to the chiller
2) Drain out all the internal solutions
3) Locate the leaking tubes
4) Replace / plug the leaking tubes
5) Replace LiBr.
   Fresh charge of LiBr is contaminated. Regenerate LiBr, if not contaminated, by removal of air.
6) Recommission the chiller.

Air ingress

This section gives the symptoms, causes and remedy for air ingress in the chiller.

Chapter 13
Troubleshooting

Symptoms

The major symptoms of air ingress are –

- Capacity problem
- Vacuum not being maintained
- Quick inhibitor depletion
- Positive results in bubble test

Probable leak points & causes of leakage

Leakages can be mainly of the following types –

- Connection leakage
- Weld leakage
- Mother plate leakage

Causes of these leakage types are –

- Connection leakage
  Can happen through
  - Gaskets
  - Flare nuts
  - Valves
  - Pump flanges
- Weld leakage
  Can happen because of
  - Porosity in weld
  - Inadequate penetration of weld
  - Weld failure due to excessive stress on a weld joint, while transportation or handling or due to vibration during operation.
- Mother Plate leakage
  Can happen because of
  - Material defect
  - Internal erosion

Procedure of checking & fixing leak

Following is the method of locating leaks:

- Perform Nitrogen test at 0.2, 0.5 and 1 kg/cm^2 g pressures.
- Perform vacuum holding test at 6 mm Hg absolute.
- Locate leak points, especially at sight glass, solution level electrodes, refrigerant level electrodes, manometer connections, diaphragm valves, absorbent pump pressure gauge connection etc.
-

The leaks are to be fixed as follows: -

- Release pressure to 0 kg/cm^2 g
- Grind leak to the bottom of weld / leak
- Welding is to be done, following proper method and by qualified welders
- Perform Nitrogen decay test for 24 hours and confirm that there is no drop in Nitrogen pressure in the chiller.
- Recommission the chiller.

Chapter 14
Electrical Details

Chapter Objectives

This chapter gives a detailed list of electrical details. It also gives the list of safeties available in the chiller. Other related details on these are also available

Power Specifications

Input Power Specifications are :

Voltage	:	415 V AC ± 10%
Frequency	:	50 Hz ± 5%

The control panel is designed to operate on 3ϕ supply system, whose line voltages are symmetrical. In cases, where the potential exists for abnormally high phase-to-ground voltage (in excess of 110% of nominal), or where the supply ground is tied to another system or equipment, which can cause the ground potential to vary with operation, an isolation transformer with the neutral of the secondary grounded, is strongly recommended.

Earthing Recommendations

- It is recommended to have a separate earthing pit to provide ground connection to the chiller.
- For ground fault currents, which may occur in the system, grounding paths and pits shall be designed such that they safely conduct them to ground with minimum possible impedance.
- The grounding path shall be continuous and permanent.
- The connections to the grounding conductor shall be permanent.
- Local codes and ordinances dictate which grounding method is permissible.
- It is necessary to connect the pumps / motors and control panel on the chiller to ground.

Environmental Specifications

- Maximum allowable ambient temperature is 45°C.
- Maximum allowable humidity is 80% RH (non condensing).
- If any explosive or corrosive gas is likely to be in the vicinity of the chiller, then it is necessary to protect the control panel and instruments from these gases, by taking appropriate measures.

Chapter 15
Precautions for Long Term Storage

Chapter Objectives

This chapter lists out the precautions that are to be taken for long term shutdown or shutdown in winter.

Precautions

For long term shutdown or shutdown in winter, following is the method to be followed :-

- The chiller has to be run in dilution cycle.
- Power supply to the chiller is to be switched off.
- The water has to be completely drained out from the chilled and cooling water circuits.
- Nitrogen has to be charged in the chiller and kept at a pressure of 0.3 kg/cm^2 (g)

Annexure - 1

POINTS TO REMEMBER WHILE INSTALLING HOT WATER FIRED VAPOUR ABSORPTION CHILLER

1. This chiller must be installed in accordance with the rules in force and used only in sufficiently ventilated space. Installation instructions should be referred while installing and using the chiller.

2. The installation must fulfill all the National and local requirements, concerning ventilation, electrical supply etc.

3. The local distribution conditions of electricity etc. are to be thoroughly checked and the chiller should be adjusted accordingly.

4. A qualified installer is required to install and adjust the chiller.

5. The space to be kept around the chiller is available in the General Arrangement drawing of the chiller. Precautions should be taken to avoid overheating of floor, walls and ceiling. The floor, walls, ceiling in the vicinity of the chiller should not be made of inflammable material.

6. The range of ambient temperatures in which the chiller is designed to operate is 5 – 45 °C.

7. The user should contact Thermax , in case he wants to make any changes on the chiller. A qualified person should carry out the changes.

8. The chiller should not be used in case malfunctioning of any part is observed. The troubleshooting instructions should be referred or Thermax personnel should be contacted.

Annexure - 2

COOLING TOWER INSTALLATION CONSIDERATIONS

The installation of cooling tower is very important for the chiller. The installation should be at such a location that the cooling water should not get contaminated. The cooling water installation should be avoided from the following situations:

i) Near the seashore.
ii) Near roadside and the areas where dust is likely to float in air.
iii) Near ventilation outlets of the industries or cooking facilities.
iv) Near ventilation outlets of hospital and chemical storages.
v) Near gardens and streetlights where there is possibility of insects falling into the water circuit.
vi) Near clothes drying areas.
vii) Near sewage or toilet vent pipe outlet areas.
viii) Near coal fired boilers and chimney outlets.
ix) If there is any enclosure or obstruction around cooling tower.

Note: The water quality is very essential for the chiller. Hence the water in cooling water circuit should be of recommended quality and the make up water in the cooling tower should also be of recommended quality. Please refer the chapter for recommended water quality (Chapter 10) for details.

Annexure - 3

CONSIDERATIONS FOR PIPING

1. Hot water circuit :

The hot water supply comes from different sources, mostly from cogeneration systems (as the name of chiller suggests). Hot water flow rate and inlet temperatures are usually constant. The Hot water inlet temperature should not be more than 110 °C and the Hot water outlet temperature should not be less than 70 °C . The Hot water inlet pressure should also be maintained constant (Maximum pressure allowed is 5 Kg/cm^2 (g)). The rapid fluctuations are not allowed in the pressure. The 3-way control valve is an essential component in the hot water circuit, which is supplied by Thermax only when it is in Thermax' scope. If the control valve is in Thermax' scope, it is normally supplied as the pneumatic control valve as a standard feature. If customer uses the electric control valve, the things like E/P converter and filters, in the diagram shown below are not required. The control valve used by the customer must be of modulating type. The control valve must be provided at the hot water inlet and the isolation valve should be as shown in the figure. The control valve is controlled according to the chilled water outlet temperature. Along with it two manual isolating valves should also be provided across the chiller.

The pump should be located at the inlet to the chiller and the pressure in the circuit therefore is calculated keeping the pressure drop in the chiller, valves, friction loss of the piping, etc. The pressure in the circuit should never exceed the allowable pressure mentioned on the chiller nameplate. The other components like thermowell for thermometers and a syphon for pressure gauge should also be fitted at the inlet and outlet pipe of the hot water circuit of the chiller. The vents and drain should also be fitted at the proper locations on the pipeline.

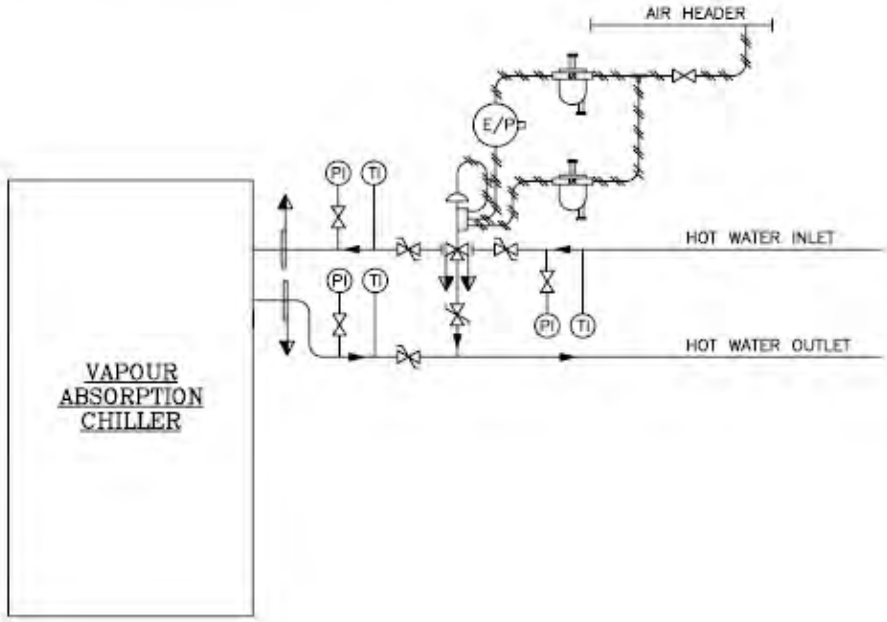

Annexure - 3

2. Chilled Water Circuit :

The chilled water, which circulates in the chilled water circuit, can be used for air conditioning or for some other cooling process.

The chilled water circuit should be provided with a circulating pump at the inlet to the chiller with valves and a non-return valve at the outlet of the pump. One thermowell for thermometer and a syphon for pressure gauge should also be fitted at the inlet and outlet of the chiller.

The chilled water piping should form a closed loop circuit i.e. direct mixing of the chilled water with the any other process stream is not allowed. The care should be taken to provide an overhead tank at the inlet pipe of the chiller. The tank will serve the purpose of providing the make up water. The vents and drain should also be fitted at the proper locations on the pipeline.

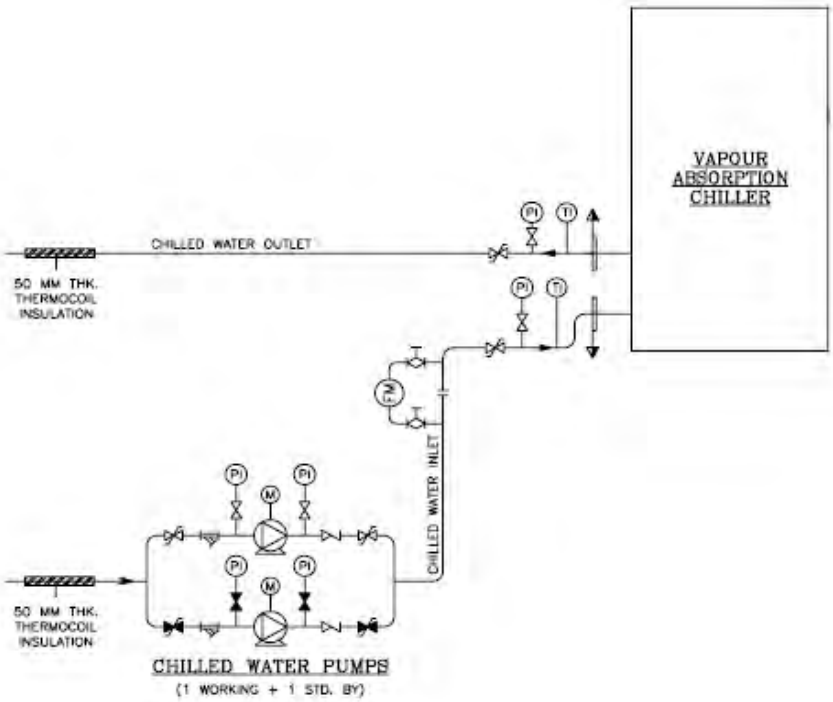

3. Cooling Water Circuit :

The cooling water should be of a recommended quality and should match with the water quality given.

There should be interlock provided between chilled and cooling water, so that cooling water flow stops as soon as the chilled water flow is stopped.

Pumps should be provided at the inlet line. Isolation valves are to be provided.

The cooling water temperature should not be less than 5 °C during startup of chiller (in this case the cooling tower fan should be off and it should be in off condition till the cooling water inlet temperature to the chiller becomes 20°C. At the same time the Cooling Tower should be by-passed till the Cooling water inlet temp. becomes 20°C).

Annexure - 3

After that the cooling water temperature should not be less than 20 °C (i.e. during operation of chiller).

The vents, drain, thermowell and syphon should also be fitted at the proper locations on the pipeline.

A 3-way valve needs to be provided at the outlet circuit. In case of low cooling water temperature, this valve will bypass the flow to avoid further cooling in the cooling tower.

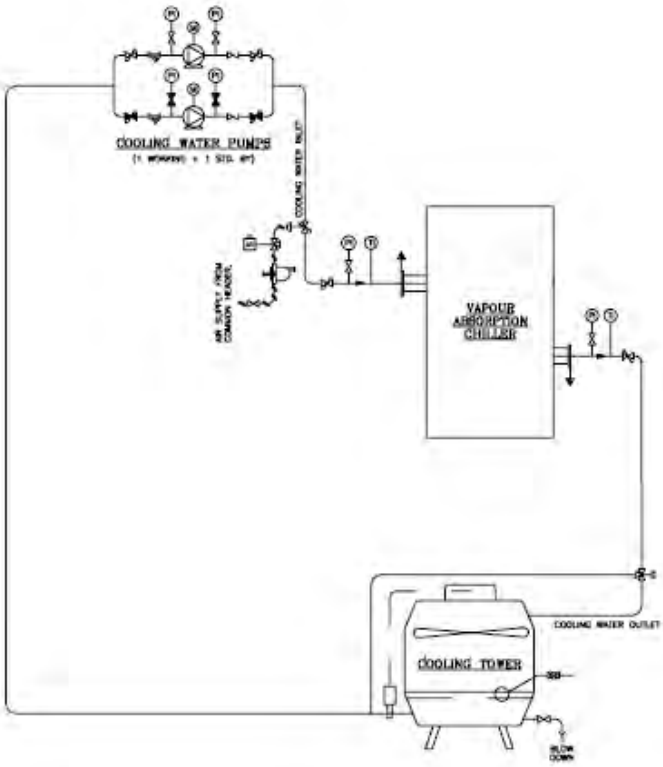

Annexure - 4

CONNECTIONS FOR RUPTURE DISK

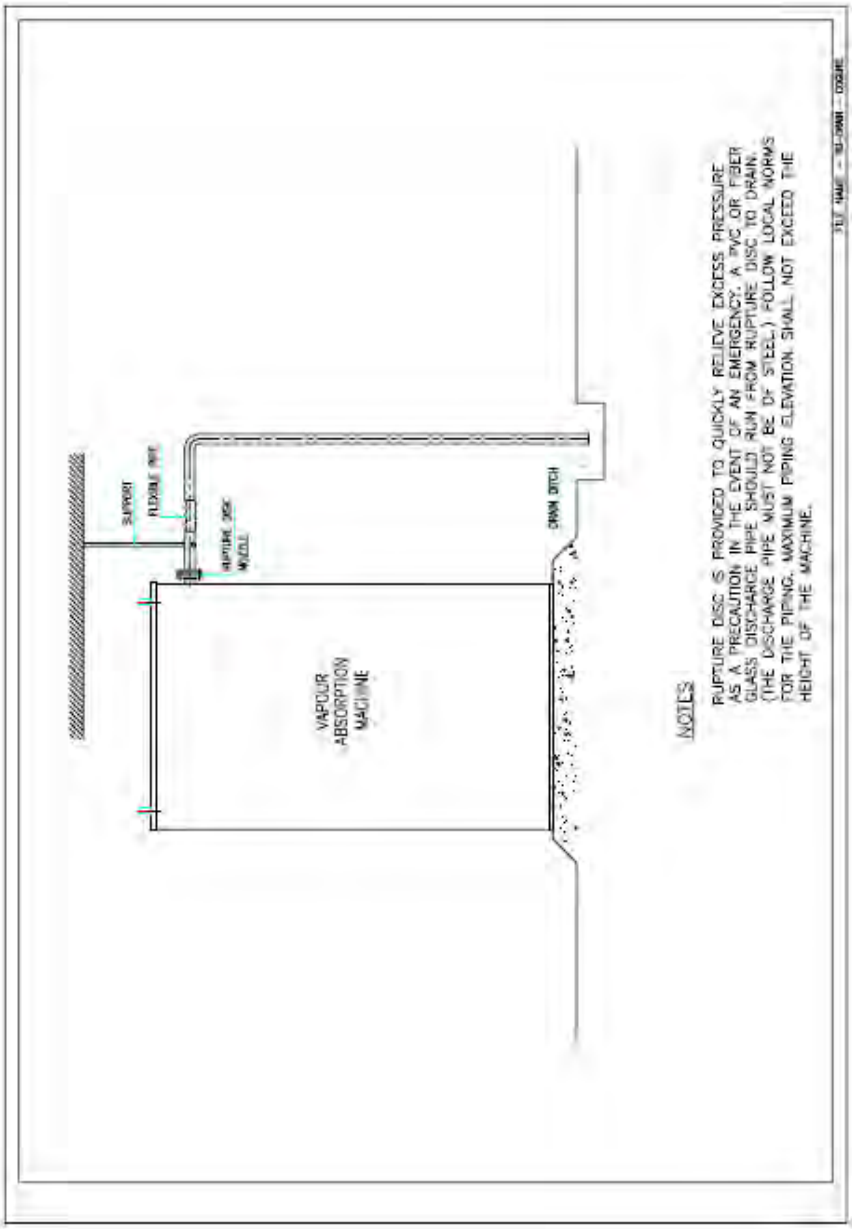

THERMAX

Material Safety Data Sheet

Revision Date April 1, 2011

1. PRODUCT AND COMPANY IDENTIFICATION

Product Name	:	LITHIUM BROMIDE SOLUTION, 53-62% in water
Company	:	Thermax Inc. 21800 Haggerty Road, Suite 112 Northville, MI 48167 USA
Telephone	:	(248) 468-0541
Fax	:	(248) 468-0546
Emergency	:	(800) 424-9300 **CHEMTREC**

2. COMPOSITION/INFORMATION ON INGREDIENTS

Chemical Formula	:	LiBr
Concentration	:	53% - 62%
Chemical Family	:	Inorganic Bromide
CAS No.	:	7550-35-8
EC No.	:	231-439-8
GHS Pictograms	:	
Intended Use	:	Desiccant medium in air conditioning and cooling systems

3. HAZARDS IDENTIFICATION

Emergency Overview

OSHA Hazards

Harmful by ingestion. Severely irritating to the eyes.

HMIS Classification

Health Hazard:	1
Flammability:	0
Physical Hazards:	0

NFPA Rating

Health Hazard:	1
Fire:	0
Reactivity:	0

Potential Health Effects

Inhalation	May be harmful if inhaled. May cause respiratory tract irritation.
Skin	May be harmful if absorbed through the skin. May cause skin irritation.
Eyes	Severely irritating to the eyes.
Ingestion	Harmful if swallowed

4. FIRST AID MEASURES

General advice
Consult a physician. Show this safety data sheet to the doctor in attendance

Inhalation
In case of inhalation or exposure to fumes released from heated material, move person into fresh air. Apply artificial respiration if necessary and get medical attention immediately.

Skin Contact
Remove contaminated clothing. Wash skin thoroughly with mild soap and plenty of water for at least 15 minutes. Wash clothing before re-use. Get medical attention if irritation persists.

Eye contact
Flush eyes promptly with plenty of water for at least 15 minutes. Get medical attention immediately.

Ingestion
If swallowed, wash mouth thoroughly with plenty of water and give water or milk to drink. Get medical attention immediately. Never give anything by mouth to an unconscious person.

5. FIRE FIGHTING MEASURES

Flash Point	No data available
Auto-ignition temperature	No data available
Flammable / Explosion limits	No data available
Extinguishing media	Material is not combustible. Use extinguishing media appropriate to surrounding fire conditions.
Fire fighting procedure	Cool containers with water spray. Wear self-contained breathing apparatus if necessary.

6. ACCIDENTAL RELEASE MEASURES

Personal precautions
Wear respirator, chemical safety goggles, rubber gloves and boots. Ensure adequate ventilation

Environmental precautions
Do not let product enter drains, streams, lakes or ponds

Clean-up
Absorb on sand or vermiculite and place in suitable closed container for disposal as hazardous waste.

7. HANDLING AND STORAGE

Handling
Avoid inhalation of vapor or mist. Avoid contact with the skin or eyes.

Storage
Keep containers tightly closed and store in a cool, well-ventilated area.

8. EXPOSURE CONTROLS / PERSONAL PROTECTION

Contains no substances with occupational exposure control limits

Personal protection equipment

Respiratory protection

Provide adequate ventilation. Use local exhaust and/or NIOSH/MSHA respirator approved for inorganic dusts and mists as necessary, especially under misting conditions.

Eye protection

Chemical safety goggles.

Hand protection

Handle with rubber gloves.

Skin and body protection

Wear appropriate clothing to protect skin from chemical exposure.

Hygiene measures

Handle in accordance with good industrial hygiene measures. Wash hands before breaks and at the end of the workday. Provide easy access to eye wash and safety shower.

9. PHYSICAL & CHEMICAL PROPERTIES

Appearance	Clear, colorless to yellow liquid
Specific gravity	1.6 g/cm^3 @ 25° C
Formula weight	86.85
Melting Point / range	10°C (58%)
Boiling Point / range	145 - 147°C (55%)
Vapor Pressure	2.1 mm Hg at 20°C (55%)
Relative vapor density (air=1)	Not available.
Evaporation rate (ether=1)	Not available.
Solubility in Water	70 g/100ml at 101°C
Solubility in Other Solvents	Miscible with Methanol, Ethanol (absolute), n-Propanol
Thermal decomposition	Not available.
Odor	Odorless

10. STABILITY AND REACTIVITY

Storage stability

Stable under normal conditions.

Materials to avoid

Strong acids. Strong oxidizing agents.

Hazardous decomposition products

Hydrogen bromide gas; Lithium oxides; and Hydrobromic acid fumes under fire conditions above 200°C

11. TOXICOLOGICAL INFORMATION

Effects of overexposure

Eyes
Severe irritant
Skin
Mild irritant to intact skin
Inhalation
May irritate the upper respiratory tract
Ingestion
May cause vomiting, nausea, diarrhea and ataxia. Slurred speech, blurred vision, dizziness, sensory loss, convulsions and stupor may occur in cases of significant ingestion.
Chronic toxicity
Repeated skin contact may cause dermatitis. Repeated oral intake of bromides may affect the central nervous system. Warning symptoms include mental dullness, slurred speech, weakened memory, apathy, anorexia, constipation, drowsiness, lack of coordination, ataxia, depression, skin rashes and loss of sensitivity to touch and pain.
Carcinogenicity

IARC:	No component of this product present at levels greater than or equal to 0.1% is identified as probable, possible or confirmed human carcinogen by IARC.
ACGIH:	No component of this product present at levels greater than or equal to 0.1% is identified as probable, possible or confirmed human carcinogen by ACGIH.
NTP:	No component of this product present at levels greater than or equal to 0.1% is identified as probable, possible or confirmed human carcinogen by NTP.
OSHA:	No component of this product present at levels greater than or equal to 0.1% is identified as probable, possible or confirmed human carcinogen by OSHA.

Mutagenicity
Not mutagenic by the Ames Test.

---

12. ECOLOGICAL INFORMATION

Aquatic toxicity
48 Hour-EC50 (Daphnia magna) : 45 mg/l

---

13. DISPOSAL CONSIDERATIONS

Waste disposal
Observe all federal, state and local environmental regulations when disposing of this material.

---

14. TRANSPORT INFORMATION

UN NUMBER	:	None
IMO-IMDG CODE	:	Not dangerous goods
ICAO / IATA	:	Not dangerous goods
RID / ADR	:	Not regulated
US DOT	:	Not dangerous goods

---

15. REGULATORY INFORMATION

GHS Elements

Signal Words	Hazardous Substance Environmentally Hazardous Substance
Hazard statements	Irritant Dermal sensitizer Acute Toxicity Narcotic Effects Respiratory Tract Irritant Environmental Toxicity

United States

OSHA Hazards
Harmful by ingestion

SARA 302 Components
No chemicals in this material are subject to the reporting requirements of SARA Title III, Section 302
SARA 313 Components
This material does not contain any chemical components with known CAS numbers that exceed the threshold (De Minimus) reporting levels established by SARA Tile III, Section 313.
SARA 311/312 Hazards
Immediate (Acute) Health Hazard

CERCLA
Not Listed

TSCA
40 CFR 707.60 Not subject to TSCA 12(b) Export Notification Requirements
40 CFR 710 Listed

Massachusetts Right to Know Components
No components are subject to the Massachusetts Right to Know Act
Pennsylvania Right to Know Components

Water	CAS 7732-18-5
Lithium Bromide	CAS 755—35-8

New Jersey Right to Know Components

Water	CAS 7732-18-5
Lithium Bromide	CAS 755—35-8

California Proposition 65 Components
This product does not contain any chemicals known to the State of California to cause cancer, birth or any other reproductive defects.

Canada
All components of this product are on the Canadian DSL List
Product Identification Number: None

Hazard Classification: Class D, Division 2B (Eye and skin irritant; skin sensitizer)

16. OTHER INFORMATION

The above information is believed to be accurate and reliable but does not purport to be all inclusive and shall be used only as a guide. The information in this document is based on the present state of our knowledge and is applicable to the product with regards to appropriate safety precautions. It does not represent any guarantee of the properties of the product. It is the responsibility of each user to ensure that these conditions are employed for safe operations. Thermax Inc. shall not be held liable for any damage resulting from handling or from contact with the above product.

THERMAX

Material Safety Data Sheet

Revision Date April 4, 2011

1. PRODUCT AND COMPANY IDENTIFICATION

Product Name	:	LITHIUM MOLYBDATE SOLUTION, 20% in water
Company	:	Thermax Inc. 21800 Haggerty Road, Suite 112 Northville, MI 48167 USA
Telephone	:	(248) 468-0541
Fax	:	(248) 468-0546
Emergency	:	(800) 424-9300 **CHEMTREC**

2. COMPOSITION/INFORMATION ON INGREDIENTS

Chemical Formula	:	Li_2MoO_4
Concentration	:	20%
Common Synonyms	:	Lithium molybdate; Dilitium molybdate
CAS No.	:	13568-40-6
EC No.	:	236-977-7
GHS Pictogram	:	
Intended Use	:	Corrosion inhibitor in air conditioning and cooling system solutions

3. HAZARDS IDENTIFICATION

Emergency Overview

OSHA Hazards

Irritant , Teratogen

HMIS Classification

Health Hazard:	2
Flammability:	0
Physical Hazards:	0

NFPA Rating

Health Hazard:	2
Fire:	0
Reactivity:	0

Potential Health Effects

Inhalation	May be harmful if inhaled. Causes respiratory tract irritation.
Skin	May be harmful if absorbed through the skin. Causes skin irritation.
Eyes	Causes eye irritation.
Ingestion	Harmful if swallowed

4. FIRST AID MEASURES

General advice
Consult a physician. Show this safety data sheet to the doctor in attendance

Inhalation
In case of inhalation or exposure to fumes released from heated material, move person into fresh air. Apply artificial respiration if necessary and get medical attention immediately.

Skin Contact
Remove contaminated clothing. Wash skin thoroughly with mild soap and plenty of water for at least 15 minutes. Wash clothing before re-use. Get medical attention if irritation persists.

Eye contact
Flush eyes promptly with plenty of water for at least 15 minutes. Get medical attention immediately.

Ingestion
If swallowed, wash mouth thoroughly with plenty of water and give water or milk to drink. Get medical attention immediately. Never give anything by mouth to an unconscious person.

5. FIRE FIGHTING MEASURES

Flash Point	No data available
Auto-ignition temperature	No data available
Flammable / Explosion limits	No data available
Extinguishing media	Material is not combustible. Use extinguishing media appropriate to surrounding fire conditions.
Fire fighting procedure	Cool containers with water spray. Wear self-contained breathing apparatus if necessary.

6. ACCIDENTAL RELEASE MEASURES

Personal precautions
Wear respirator, chemical safety goggles, rubber gloves and boots. Ensure adequate ventilation.

Environmental precautions
Do not let product enter drains, streams, lakes or ponds.

Clean-up
Absorb on sand or vermiculite and place in suitable closed container for disposal as hazardous waste.

7. HANDLING AND STORAGE

Handling
Avoid inhalation of vapor or mist. Avoid contact with the skin or eyes.

Storage
Keep containers tightly closed and store in a cool, well-ventilated area.

8. EXPOSURE CONTROLS / PERSONAL PROTECTION

Contains no substances with occupational exposure control limits.

Personal protection equipment

Respiratory protection
Provide adequate ventilation. Use local exhaust and/or NIOSH/MSHA respirator approved for inorganic dusts and mists as necessary, especially under misting conditions.

Eye protection
Chemical safety goggles.

Hand protection
Handle with rubber gloves.

Skin and body protection
Wear appropriate clothing to protect skin from chemical exposure.

Hygiene measures
Handle in accordance with good industrial hygiene measures. Wash hands before breaks and at the end of the workday. Provide easy access to eye wash and safety shower.

9. PHYSICAL & CHEMICAL PROPERTIES

Appearance	Clear, colorless to yellow liquid
Specific gravity	Not available
Formula weight	173.82
Melting Point / range	Not available
Boiling Point / range	Not available
Vapor Pressure	Not avaialble
Relative vapor density (air=1)	Not available.
Evaporation rate (ether=1)	Not available.
Solubility in Water	Not available
Solubility in Other Solvents	Not available

10. STABILITY AND REACTIVITY

Storage stability
Stable under normal conditions.

Materials to avoid
Strong acids. Strong bases.

Hazardous decomposition products
Lithium oxides and Molybdenum oxides under fire conditions above 200°C

11. TOXICOLOGICAL INFORMATION

Effects of overexposure

Eyes

Severe irritant

Skin

Mild irritant to intact skin

Inhalation

May irritate the upper respiratory tract

Ingestion

May cause vomiting, nausea, diarrhea and ataxia. Slurred speech, blurred vision, dizziness, sensory loss, convulsions and stupor may occur in cases of significant ingestion.

Chronic toxicity

No data available

Reproductive Toxicity

Lithium and its compounds are possible teratogens by analogy to lithium carbonate which has equivocal human teratogenic data and positive animal teratogenic data.

Carcinogenicity

IARC:	No component of this product present at levels greater than or equal to 0.1% is identified as probable, possible or confirmed human carcinogen by IARC.
ACGIH:	No component of this product present at levels greater than or equal to 0.1% is identified as probable, possible or confirmed human carcinogen by ACGIH.
NTP:	No component of this product present at levels greater than or equal to 0.1% is identified as probable, possible or confirmed human carcinogen by NTP.
OSHA:	No component of this product present at levels greater than or equal to 0.1% is identified as probable, possible or confirmed human carcinogen by OSHA.

12. ECOLOGICAL INFORMATION

No data available

13. DISPOSAL CONSIDERATIONS

Waste disposal

Observe all federal, state and local environmental regulations when disposing of this material.

14. TRANSPORT INFORMATION

UN NUMBER	:	None
IMO-IMDG CODE	:	Not dangerous goods
ICAO / IATA	:	Not dangerous goods
RID / ADR	:	Not regulated
US DOT	:	Not dangerous goods

15. REGULATORY INFORMATION

GHS Elements

Signal Words	Hazardous Substance
Hazard statements	Irritant Dermal sensitizer Acute Toxicity Narcotic Effects Respiratory Tract Irritant

United States

OSHA Hazards
Irritant , Teratogen

SARA 302 Components
No chemicals in this material are subject to the reporting requirements of SARA Title III, Section 302
SARA 313 Components
This material does not contain any chemical components with known CAS numbers that exceed the threshold (De Minimus) reporting levels established by SARA Tile III, Section 313.
SARA 311/312 Hazards
Immediate (Acute) Health Hazard, Chronic Health Hazard

CERCLA
Not Listed

TSCA
40 CFR 707.60 Not subject to TSCA 12(b) Export Notification Requirements
40 CFR 710 Listed

Massachusetts Right to Know Components
No components are subject to the Massachusetts Right to Know Act
Pennsylvania Right to Know Components

Water	CAS 7732-18-5
Dilithium Molybdate	CAS 755—35-8

New Jersey Right to Know Components

Water	CAS 7732-18-5
Dilithium Molybdate	CAS 755—35-8

California Proposition 65 Components
This product does not contain any chemicals known to the State of California to cause cancer, birth or any other reproductive defects.

Canada
This product contains the following components listed on the Canadian NDSL List. All other components are on the Canadian DSL list.
Dilithium molydate CAS No: 13568-40-6

16. OTHER INFORMATION

The above information is believed to be accurate and reliable but does not purport to be all inclusive and shall be used only as a guide. The information in this document is based on the present state of our knowledge and is applicable to the product with regards to appropriate safety precautions. It does not represent any guarantee of the properties of the product. It is the responsibility of each user to ensure that these conditions are employed for safe operations. Thermax Inc. shall not be held liable for any damage resulting from handling or from contact with the above product.

THERMAX

Material Safety Data Sheet

Revision Date April 4, 2011

1. PRODUCT AND COMPANY IDENTIFICATION

Product Name	:	OCTYL ALCOHOL
Company	:	Thermax Inc. 21800 Haggerty Road, Suite 112 Northville, MI 48167 USA
Telephone	:	(248) 468-0541
Fax	:	(248) 468-0546
Emergency	:	(800) 424-9300 **CHEMTREC**

2. COMPOSITION/INFORMATION ON INGREDIENTS

Chemical Formula	:	$CH_3(CH_2)_7OH$
Concentration	:	100%
Common Synonyms	:	1-Octanol; Caprylic alcohol; Heptyl carbinol; 1-Hydroxyoctane; 1-Ethyl-2-hexanol
CAS No.	:	111-87-5
EC No.	:	203-917-6
Intended Use	:	Capacity booster in air conditioning and cooling system solutions

3. HAZARDS IDENTIFICATION

Emergency Overview

Caution! May be harmful if swallowed or inhaled. Causes irritation to skin, eyes and respiratory tract. Affects central nervous system. Combustible liquid and vapor.

HMIS Classification

Health Hazard:	1
Flammability:	2
Physical Hazards:	1

NFPA Rating

Health Hazard:	1
Fire:	2
Reactivity:	0

Potential Health Effects

Inhalation	Inhalation of vapors irritates the respiratory tract. May cause coughing, dizziness, dullness and headache. Higher concentrations can produce central nervous system depression, narcosis and unconsciousness.
Skin	Mile skin irritant which causes loss of natural oils. May be a route of absorption into the body.
Eyes	Causes eye irritation, redness and pain.
Ingestion	Large oral doses may cause irritation to the gastrointestinal tract.
Chronic Exp.	No data available

4. FIRST AID MEASURES

General advice
Consult a physician. Show this safety data sheet to the doctor in attendance

Inhalation
In case of inhalation or exposure to fumes released from heated material, move person into fresh air. Apply artificial respiration if necessary and get medical attention immediately.

Skin Contact
Remove contaminated clothing. Wash skin thoroughly with mild soap and plenty of water for at least 15 minutes. Wash clothing before re-use. Get medical attention if irritation persists.

Eye contact
Flush eyes promptly with plenty of water for at least 15 minutes. Get medical attention immediately.

Ingestion
If swallowed, wash mouth thoroughly with plenty of water and give water or milk to drink. Get medical attention immediately. Never give anything by mouth to an unconscious person.

5. FIRE FIGHTING MEASURES

Flash Point	81° C
Auto-ignition temperature	No data available
Flammable / Explosion limits	Above the flash point, explosive air-vapor mixtures may form
Extinguishing media	Water spray, dry chemical, alcohol foam or carbon dioxide
Fire fighting procedure	Cool containers with water spray. Wear self-contained breathing apparatus if necessary.

6. ACCIDENTAL RELEASE MEASURES

Personal precautions
Remove all sources of ignition. Wear respirator, chemical safety goggles, rubber gloves and boots. Ensure adequate ventilation. Isolate hazard area. Use non-sparking tools and equipment.

Environmental precautions
Do not let product enter drains, streams, lakes or ponds. Contain and recover liquid when possible. Do not flush to sewer.

Clean-up
Absorb on sand or vermiculite and place in suitable closed container for disposal as hazardous waste. Do not use combustible adsorbents such as sawdust.

7. HANDLING AND STORAGE

Handling
Avoid inhalation of vapor or mist. Avoid contact with the skin or eyes.

Storage
Keep containers tightly closed and store in a cool, well-ventilated area. Store separate from oxidizing materials. Store in standard flammable liquid containers. Empty containers may retain hazardous vapor and liquid residues.

8. EXPOSURE CONTROLS / PERSONAL PROTECTION

AIHA Workplace Environmental Exposure Limit: 50ppm, 8 hr. TWA: None established

Personal protection equipment

Respiratory protection
Provide adequate ventilation. Use local exhaust and/or NIOSH/MSHA respirator approved for organic dusts and mists as necessary, especially under misting conditions.

Eye protection
Chemical safety goggles. Maintain unobstructed access to eye wash and safety shower stations.

Hand protection
Handle with rubber gloves.

Skin and body protection
Wear impervious protective clothing to protect skin from chemical exposure.

Hygiene measures
Handle in accordance with good industrial hygiene measures. Wash hands before breaks and at the end of the workday. Provide easy access to eye wash and safety shower.

9. PHYSICAL & CHEMICAL PROPERTIES

Appearance	Clear, colorless liquid
Specific gravity	0.827
Formula weight	173.82
Melting Point / range	-17° C
Boiling Point / range	194.5° C
Vapor Pressure	0.07 @ 25° C
Relative vapor density (air=1)	4.5
Evaporation rate (Ether=1)	Not available.
Solubility in Water	540mg/L
Solubility in Other Solvents	Miscible
Odor	Penetrating aromatic odor

10. STABILITY AND REACTIVITY

Storage stability
Flammable. Keep away from heat and ignition sources. Stable under normal conditions

Materials to avoid
Strong oxidizers

Hazardous decomposition products
Carbon monoxide, carbon dioxide

11. TOXICOLOGICAL INFORMATION

Effects of overexposure

Eyes

Severe irritant

Skin

Mild irritant to intact skin

Inhalation

May irritate the upper respiratory tract

Ingestion

May cause vomiting, nausea, diarrhea and ataxia. Slurred speech, blurred vision, dizziness, sensory loss, convulsions and stupor may occur in cases of significant ingestion.

Chronic toxicity

No data available

Reproductive Toxicity

Lithium and its compounds are possible teratogens by analogy to lithium carbonate which has equivocal human teratogenic data and positive animal teratogenic data.

Carcinogenicity

IARC:	No component of this product present at levels greater than or equal to 0.1% is identified as probable, possible or confirmed human carcinogen by IARC.
ACGIH:	No component of this product present at levels greater than or equal to 0.1% is identified as probable, possible or confirmed human carcinogen by ACGIH.
NTP:	No component of this product present at levels greater than or equal to 0.1% is identified as probable, possible or confirmed human carcinogen by NTP.
OSHA:	No component of this product present at levels greater than or equal to 0.1% is identified as probable, possible or confirmed human carcinogen by OSHA.

12. ECOLOGICAL INFORMATION

Environmental Fate

When released into soil, water or air, this material is expected to readily biodegrade. This material is not expected to bioaccumulate.

Environmental Toxicity

The LC_{50}/96-hr range for fish is 10-100mg/L. This material is slightly toxic to aquatic life.

13. DISPOSAL CONSIDERATIONS

Waste disposal

Observe all federal, state and local environmental regulations when disposing of this material.

14. TRANSPORT INFORMATION

Not regulated

15. REGULATORY INFORMATION

GHS Elements

Signal Words	Hazardous Substance
Hazard statements	Irritant Dermal sensitizer Acute Toxicity Narcotic Effects Respiratory Tract Irritant

United States

OSHA Hazards
Irritant , Teratogen

SARA 302 Components
No chemicals in this material are subject to the reporting requirements of SARA Title III, Section 302
SARA 313 Components
This material does not contain any chemical components with known CAS numbers that exceed the threshold (De Minimus) reporting levels established by SARA Tile III, Section 313.
SARA 311/312 Hazards
Immediate (Acute) Health Hazard, Fire

CERCLA
Not Listed

TSCA
Not listed

Massachusetts Right to Know Components
1-Octanol CAS 111-87-5
Pennsylvania Right to Know Components
1-Octanol CAS 111-87-5
New Jersey Right to Know Components
1-Octanol CAS 111-87-5
California Proposition 65 Components
This product does not contain any chemicals known to the State of California to cause cancer, birth or any other reproductive defects.

Canada
This product contains the following components listed on the Canadian DSL List.
1-Octanol CAS No: 111-87-5

16. OTHER INFORMATION

The above information is believed to be accurate and reliable but does not purport to be all inclusive and shall be used only as a guide. The information in this document is based on the present state of our knowledge and is applicable to the product with regards to appropriate safety precautions. It does not represent any guarantee of the properties of the product. It is the responsibility of each user to ensure that these conditions are employed for safe operations. Thermax Inc. shall not be held liable for any damage resulting from handling or from contact with the above product.

Sr. No.	PLC Address	Description	MODBUS ADDRESS	Scaling Factor
		M/C PARAMETERS		
1	VW1550	Chilled Water Inlet temp	40031	m = 0.0562500 & c = -418
2	VW1552	Chilled water Outlet temp	40032	m = 0.0562500 & c = -418
3	VW1554	Cooling Water Inlet Temp	40033	m = 0.0562500 & c = -418
4	VW1556	U-Tube Temp	40034	m = 0.0562500 & c = -418
5	VW1558	Gen Temp	40035	m = 0.0562500 & c = -418
6	VW1560	HOT Water in temp	40036	m = 0.0562500 & c = -418
7	VW1562	HOT Water Out temp	40037	m = 0.0562500 & c = -418
8	VW1564	Cooling Water Outlet Temp	40038	m = 0.0562500 & c = -418
9	VW1566	Vacuum	40039	m = 0.0296875 & c = -190
10	VW1568	SPARE	40040	N.A
11	VW1570	SPARE	40041	N.A
12	VW1572	SPARE	40042	N.A
13	VW1574	CV Opening	40043	N.A
		SETPOINTS		
1	VW1060	C.T.Fan ON/OFF Setpoint	40001	m = 0.0562500 & c = -418
2	VW1062	C.T.Fan hysterisis	40002	m = 0.0562500 & c =0
3	VW1064	SPARE	40003	N.A
4	VW1066	L-cut Diff.set point	40004	m = 0.0562500 & c =0
5	VW1068	L-cut hysterisis	40005	m = 0.0562500 & c =0
6	VW1070	SPARE	40006	N.A
7	VW1072	CV opening limit	40007	N.A
8	VW1074	SPARE	40008	N.A
9	VW1076	SPARE	40009	N.A
10	VW1078	Machine Setpoint	40010	m = 0.0562500 & c = -418
11	VW1080	Gen Diff SP to close CV	40011	m = 0.0562500 & c =0
12	VW1082	Hysterisis	40012	m = 0.0562500 & c =0
13	VW1084	SPARE	40013	N.A
14	VW1086	SPARE	40014	N.A
15	VW1088	Internal PLC software antifreeze	40015	m = 0.0562500 & c = -418
16	VW1090	Internal PLC software antifreeze hysterisis	40016	m = 0.0562500 & c =0
17	VW1092	Cooling water inlet temp. low set point	40017	m = 0.0562500 & c = -418
18	VW1094	Cooling water inlet temp. low hysterisis	40018	m = 0.0562500 & c =0
19	VW1096	Gen trip set point	40019	m = 0.0562500 & c = -418
20	VW1098	Gen hysterisis	40020	m = 0.0562500 & c =0
21	VW1100	H-cut Diff set point.	40021	m = 0.0562500 & c =0
22	VW1102	H-cut hysterisis.	40022	m = 0.0562500 & c =0
23	VW1104	SPARE	40023	N.A
24	VW1106	SPARE	40024	N.A
25	VW1108		40025	m = 0.0562500 & c = -418
26	VW1110		40026	m = 0.0562500 & c = -418
27	VW1112	SPARE	40027	N.A
28	VW1114	SPARE	40028	N.A
29		SPARE	40029	N.A
30		SPARE	40030	N.A

ALARMS				
1	M13.0	Chilled Water Pump Interlock Trip	40044.8	NA
2	M13.1		40044.9	
3	M13.2	Chilled Water D P Switch Trip	40044.10	
4	M13.3	Antifreeze Thermostat Trip	40044.11	
5	M13.4		40044.12	
6	M13.5	Purge Pump not developing Vacuum	40044.13	
7	M13.6	Absorbent Pump Trip	40044.14	
8	M13.7	Refrigerant Pump Trip	40044.15	
9	M14.0	Purge Pump trip	40044.0	
10	M14.1	Generator Temp High	40044.1	
11	M14.2		40044.2	
12	M14.3		40044.3	
13	M14.4		40044.4	
14	M14.5	Absorbent Pump Not Responding	40044.5	
15	M14.6	Refrigerant Pump Not Responding	40044.6	
16	M14.7		40044.7	
17	M15.0	Chilled Water Inlet Temp Sensor Error	40045.8	
18	M15.1	Chilled Water Outlet Temp Sensor Error	40045.9	
19	M15.2	Cooling Water Inlet Temp Sensor Error	40045.10	
20	M15.3	U-Tube Temp Sensor Error	40045.11	
21	M15.4	GEN Temp Sensor Error	40045.12	
22	M15.5	HW IN temp sensor Error	40045.13	
23	M15.6	HW OUT temp sensor Error	40045.14	
24	M15.7	Cooling Water Outlet Temp Sensor Error	40045.15	
25	M16.0	SPARE	40045.0	
26	M16.1	SPARE	40045.1	
27	M16.2	Internal Antifreeze	40045.2	
28	M16.3	SPARE	40045.3	
29	M16.4	SPARE	40045.4	
30	M16.5	SPARE	40045.5	
31	M16.6	SPARE	40045.6	
32	M16.7	SPARE	40045.7	
33	M17.0	Power Failure	40046.8	
34	M17.1	SPARE	40046.9	
35	M17.2	SPARE	40046.10	
36	M17.3	Cooling Water Inlet Temp Low	40046.11	
37	M17.4	SPARE	40046.12	
38	M17.5	SPARE	40046.13	
39	M17.6	SPARE	40046.14	
40	M17.7	SPARE	40046.15	
41	M18.0	SPARE	40046.0	
42	M18.1	SPARE	40046.1	
43	M18.2	SPARE	40046.2	
44	M18.3	SPARE	40046.3	
45	M18.4	SPARE	40046.4	
46	M18.5	SPARE	40046.5	
47	M18.6	SPARE	40046.6	
48	M18.7	SPARE	40046.7	

DIGITAL INPUTS				
1	I0.0	Chilled Water Pump Feedback	10001	NA
2	I0.1		10002	
3	I0.2	Chilled Water D.P. Switch	10003	
4	I0.3	Antifreeze Thermostat	10004	
5	I0.4	Absorbent Pump Feedback	10005	
6	I0.5	Absorbent Pump Overload	10006	
7	I0.6	Refrigerant Pump Feedback	10007	
8	I0.7	Refrigerant Pump Overload	10008	
9	I1.0	Purge Pump Overload	10009	
10	I1.1	Evaporator Level Relay	10010	
11	I1.2	SPARE	10011	
12	I1.3	SPARE	10012	
13	I1.4	SPARE	10013	
14	I1.5	Remote ON/OFF	10014	
15	I1.6		10015	
16	I1.7		10016	
17	I2.0		10017	
18	I2.1		10018	
19	I2.2		10019	
20	I2.3	SPARE	10020	
21	I2.4	SPARE	10021	
22	I2.5	SPARE	10022	
23	I2.6	SPARE	10023	
24	I2.7	SPARE	10024	

DIGITAL OUTPUTS				
1	Q0.0	Hooter	00001	NA
2	Q0.1	Refrigerant Pump	00002	
3	Q0.2	Purge Pump	00003	
4	Q0.3	Remote Machine ON	00004	
5	Q0.4	Remote Machine Trip	00005	
6	Q0.5	Chilled Water Permissive	00006	
7	Q0.6	Cooling Water Permissive	00007	
8	Q0.7	Cooling Tower Fan Permissive	00008	
9	Q1.0	Absorbent Pump	00009	
10	Q1.1		00010	
11	Q1.2		00011	
12	Q1.3	Auto Purge Solenoid valve-1	00012	
13	Q1.4	Auto Purge Solenoid valve-2	00013	
14	Q1.5	Auto Purge Solenoid valve-3	00014	
15	Q1.6	SPARE	00015	
16	Q1.7	SPARE	00016	

Port-0 shall be used for MODBUS communication with
Pin-3:Signal B (RXD/TXD+) and
Pin-8:Signal A (RXD/TXD-)

COMMUNICATION PARAMETERS
RS 485 TWO WIRE - RTU SLAVE ADDRESS
BAUD RATE : 9600
STOP BITS : ONE
PARITY : EVEN
DATA BIT : 8

LIMITED WARRANTY CERTIFICATE

Thermax Ltd. (hereinafter called the manufacturer/) warrants the Product manufactured by it and bearing its name plate (herein after called warranted Product) to and exclusively for the benefit the users of the Products. This limited warranty shall extend solely to persons who are owners of the Product which is warranted during the warranty period of **12 months**, subject that the Product is installed for **SMUD Project** and only the purpose for which the Product under warranty, was acquired from the manufacturer.

The manufacturer warrants its Product to be free from defects in material and workmanship under normal use and service for a period of 1 year commencing from the date of initial start up of the Product.

The Manufacturer will repair or replace F.O.B. factory the Product or such components as the manufacturer finds defective. This warranty does not include cost of handling, shipping, transportation, any taxes or duties or other charges such as modifications to the building structure housing the Product, and/or other charges required in supplying replacements for defective components.

The Manufacturer shall not be liable for any warranty until such time that the Manufacturer/supplier has received full payment for the Product and the liability of the Manufacturer shall be limited to the cost of repairing or replacing the Product and/or its components.

It is expressly stated that the Manufacturer's liability is limited to the FOB factory value of the Product. The Manufacturer shall not be liable for any personal injury and property damage resulting from the improper handling, possession or use of this product by the purchaser or others who obtain it through purchaser and the Purchaser /Owner shall be liable for and assumes full responsibility for any such personal injury and property damage resulting from improper handling, possession or use of the Product.

Manufacturer shall not be liable for and will not reimburse any labor, material or other repair charges incurred by any unauthorized persons, agencies etc., on the warranted Product, unless Manufacturer has specifically authorized such persons and/or agencies in writing for carrying out any repairs on the Product.

Warranty obligation hereunder will be performed between the hours of 9:00 am and 5:00 pm Monday through Friday, excluding holidays.

Exclusions to Warranty:

This warranty does not apply if:

a) The Product has been damaged by negligence, accident or misuse/abuse including but not limited to the use of improperly treated water, exposure to corrosive environments and or ambient temperatures outside the temperature ranges specified in the operating instructions and the O&M Manual.
b) The Product has not been handled, installed, operated, maintained and serviced as per written instructions of the manufacturer during running as well as shutdown period.
c) The Product has not been properly stored, protected or inspected by the customer during the period from date of shipment to date of initial startup and thereafter.
d) The Product has been serviced or modified by unauthorized person / agent not recommended and authorized in writing by the Manufacturer.
e) The warranted Product is operated with fuel, water and power not conforming to manufacturer's specifications/instructions.
f) If the Product is operated beyond the rated conditions/capacities from those rated and /or specified by the manufacturer.
g) Failure/damage/malfunctioning has occurred due to fouling/ageing of heat exchangers, corrosion, electrolytic action, rupture or vandalism
h) External corrosion of product due to atmospheric conditions, flue gases or corrosive environment.
i) If the Product is not under Annual Maintenance Contract of the Manufacturer from the date of initial startup.
j) Owner discontinues the annual preventive maintenance contract with the Manufacturer.

Excluded from any coverage under this warranty are electrical/electronic components such as PLC, Operator Interface, input/output cards, motors, contactors, drives, instruments, replacement or repair of parts normally consumed in service such as seals, gaskets, oil, chemicals and all material considered as part of routine maintenance and upkeep and such parts are not eligible for repair or replacement under this warranty. Accessories excluded from any coverage under this warranty are the burner, diverter damper and the vacuum pump that are covered by the standard warranty provided by their manufacturers.

Excluded from any coverage under this warranty are inspections, alterations, replacements and retrofits required by any local insurance companies, municipal or governmental agencies or regulatory bodies.

Except as otherwise expressly stated above, the Manufacturer makes no representation or warranty of any kind, express or implied, as to merchantability, fitness for a particular purpose, or any other matter with respect to the Product. The Manufacturer shall not be responsible for any consequential or incidental damages, costs and or claims of any nature whatsoever resulting from such things as, but not limited to, defects in design, material, workmanship or delays in delivery, replacements or repairs.

WSA ENGINEERED SYSTEMS®
2018 South 1st Street
Milwaukee WI 53207
Phone: (414) 481-4120 Fax: (414) 481-4121
Visit our web site at: www.wsaes.com

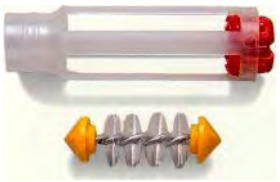

AUTOMATIC BRUSH TYPE TUBE CLEANING SYSTEM SPECIFICATION WSA-SPEC-001

GENERAL DESCRIPTION

1.1 An Automatic Tube Cleaning System shall be installed for each shell and tube condenser / heat exchangers to maintain a fouling factor at or below 0.00025. The Automatic Tube Cleaning System shall be as manufactured by WSA Engineered Systems, Milwaukee, Wisconsin.

1.2 Tubes shall be automatically brushed clean at preset intervals by two passes of each tube brush a minimum of every eight (8) hours. Cleaning is accomplished by means of a free-floating brush passing through each tube. Each tube has two basket assemblies attached, one outside of each tube end creating two park positions for each brush; the "normal" and the "temporary" position. All brushes are held captive to each tube by the two baskets. A four-way flow diverter (furnished as part of the system) is used to reverse flow through the tubes at pre-selected intervals while the unit is on-line. The reversal of flow carries the brushes through the tubes, cleaning the tube walls as they pass through. The brushes are stopped at the temporary positions for a short period after which flow is returned to the normal direction, which again carries the brushes through the tubes to their "normal park positions". The brushes stay in this position until the next cleaning cycle is initiated.

EQUIPMENT SPECIFICATIONS

2.1 Brush and Basket Sets

The brush and basket sets shall be as manufactured and supplied by WSA Engineered Systems, Milwaukee, Wisconsin.

2.1.1 Brushes

One brush and basket set (one brush /two baskets with two end clips) is to be furnished for each tube. Brushes are to be made of nylon bristles, with titanium wire and polypropylene tips.

2.1.2 Baskets

Each basket assembly consists of a cage and a removable locking end clip (anti-vibration locking type), having a minimum of four (4) prongs. The end clip can be removed and reinserted into the basket without deforming the basket. The baskets are to be made of polypropylene. The baskets are to be directly fastened to the tube end using special epoxy which when set allows the baskets to

withstand a 10-pound pull test. The baskets shall be designed so that, when attached to the tube, full access to the tube is provided by removing the end clip. This allows removal of the brush from the tube without deformation or removal of the basket cage from the tube.

2.1.3 Optional Materials

Brush & Basket sets are available in a wide range of specialty materials for all applications.

Flow Reversing Diverter

Each system shall be equipped with a four-way flow diverter valve. Each diverter shall be equipped with a pneumatic or electric actuator and position indicator. The diverter shall be sandblasted, cleaned and finish coated prior to shipment.

The actuator supplied as part of the valve shall be directly mounted to the shaft by means of a coupling. Other devices such as a simple air cylinder with a linkage arm are not allowed. A reputable manufacturer shall supply the complete pneumatic actuator. The position indicator and limit switches shall be directly mounted on the actuator.

Control Panel

2.3.1 The primary function of the control panel is to provide signals to the flow diverter actuator at preset time intervals.

2.3.2 The Control Panel shall include:

Real time indicator.
Timer to initiate cleaning cycle.
Manual override to start cleaning cycles.
“Power On” indicator light.
Diverter position indicator lights.
Diverter cycle failure lights.
Cycle counter.
Flow switch bypass with adjustable delay. (Optional item)
Machine unloading with adjustable delay. (Optional item)
Control panel shall be NEMA 4X
Adjustable timers.

Quality Control

Manufacturer shall have a comprehensive in-house inspection and Quality Control program established.

Field Service and Replacement Parts

Manufacturer, where allowed by local trade laws, will perform the installation of brush and baskets. Manufacturer’s qualified field service personnel are to be available at owner’s request and expense to service or repair equipment furnished after warranty period.

Manufacturer shall maintain an adequate inventory of replacement parts at his facility available for immediate shipment.

Performance Guarantee

When the system is installed and operated in accordance with the instructions furnished by the manufacturer, the fouling factor in the condenser will be maintained at or below 0.00025.

Condenser Cleaning

Prior to installing the brush and basket sets, the condenser tubes shall be cleaned to the satisfaction of the ATCS manufacturer. Chemical, mechanical cleaning or hydro-lance cleaning is typically required to remove any scale or fouling on the tube surface of existing machines. Prior to installing the basket cages, the tube ends must be free of any moisture, oil, grease or other contaminants at the last three inches of the tube ends at the time of installation.

WSA ENGINEERED SYSTEMS®
2018 South 1st Street
Milwaukee WI 53207

Phone: (414) 481-4120 Fax: (414) 481-4121

Visit our web site at: www.wsaes.com

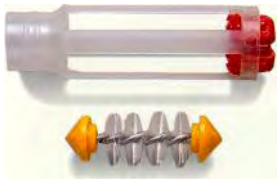

BRUSH TYPE ON-LINE

AUTOMATIC TUBE CLEANING SYSTEM

CONTROLS SPECIFICATION

WSA-SPEC-003

GENERAL DESCRIPTION

1.1 The primary function of the control system is to operate and monitor the function of the Automatic Tube Cleaning System (ATCS).

1.2 Options are available to send signals to the chiller control for unloading the machine during the cleaning cycle or bypassing a machine flow switch during the cleaning cycle.

1.2.1 Benefits

Four (4) control configurations to choose from.
Easy plug-in addition of flow switch bypass or machine unload relay options.
Easy and accurate switch setting of time delay relays.
Momentary actuation of MANUAL CYCLE, push-button for cleaning cycle.

NEMA 4X enclosure.
Direct shaft mounted actuator assures reliability and accurate (no linkage) actuation.
Position indicator integral to actuator to assure reliably accurate observation of system status.
Solenoid pre-mounted and tested on actuator as a single unit for easy field installation and startup.

EQUIPMENT SPECIFICATIONS

This section covers the design, operation, and construction requirements for the automatic tube cleaning system electrical control system.

2.1 General Description

All electrical equipment supplied shall be in accordance with IEC and NEMA standards unless specified otherwise. All control devices and wiring will be in accordance with NEC practices.

2.2 Enclosure

NEMA 4X Enclosure - Indoor and outdoor use, for protection against rain, clean up, water and corrosion resistance.

Position Indicator

The position indicator switch has two cams and limit switches in a NEMA 4 X housing mounted on the flow diverter. The switches send signals to the control panel, which indicate the diverter operating time and generate the flow switch bypass signal.

Solenoid Valve

2.4.1 Solenoid Operated Four-Way Air Valve

The solenoid receives an electrical signal from the control panel and sends an air signal to the actuator to change the diverter flow position exhaust speed control mufflers are adjusted so that a smooth transition in the water flow is maintained in the chiller during flow direction change.

Standard Features

On the basic control panel, Model 525-0, and all other optional panels:

2.5.1 24-hour Programmable Timer with 96 captive trippers which initiate the cleaning cycle at preset times.

2.5.2 Indicator Lights for POWER ON, NORMAL FLOW, REVERSE FLOW and CYCLE FAILURE.

2.5.3 Cycle Counter to record the number of complete cleaning cycles.

2.5.4 MANUAL CYCLE push-button which allows a cleaning cycle to be initiated at any time; by depressing this button, a system cleaning cycle will be completed and the control sequence will return to automatic operating conditions.

2.5.5 FAILURE RESET push-button, which turns the CYCLE FAILURE LIGHT off and also resets the cycle failure monitoring circuit. The CYCLE FAILURE monitor checks the time required for the flow diverter plug to change positions. If the actual diverter plug travel time exceeds the present control time the CYCLE FAILURE LIGHT will illuminate. When illuminated a problem exists (i.e.: the diverter plug is stuck between flow positions or is taking an excess amount of time to travel between positions) and corrective action must be taken. The CYCLE FAILURE LIGHT WILL remain ON until the diverter plug is in the full normal or reverse position and the FAILURE RESET push-button is depressed.

2.5.6 Volt, 60 Hertz, 1 Ampere Panel Fuse.

Optional Features

2.6.1 Flow Switch Bypass Option Model 525-1

Some refrigeration units have a flow switch or a differential pressure switch, which shuts the machine down if the flow in the condenser/evaporator water line drops below a specified rate. If installation of the flow diverter puts the flow switch between the diverter and the chiller, a control can be supplied to override the flow switch during the cleaning cycle and prevent shutdown of the refrigeration machine when the flow is changed. It is preferable to move the flow switch ahead of the flow diverter, as this will maintain the machine low flow protection during the cleaning cycle.

If the condenser/evaporator has a differential pressure shut down switch, the flow switch bypass control can be used to override the differential pressure switch during the cleaning cycle.

2.6.2 Refrigeration Machine Unloading Option Model 525-2

Some refrigeration machines when operating at or near full load will shutdown on high head pressure when the water through the condenser/evaporator is reversed. This control option provides a signal to the refrigeration machine control to unload the machine before the diverter changes the water flow direction.

2.6.3 Flow Switch Bypass and Unloading Model 525-3

Both options as described in 1 & 2 above are provided.

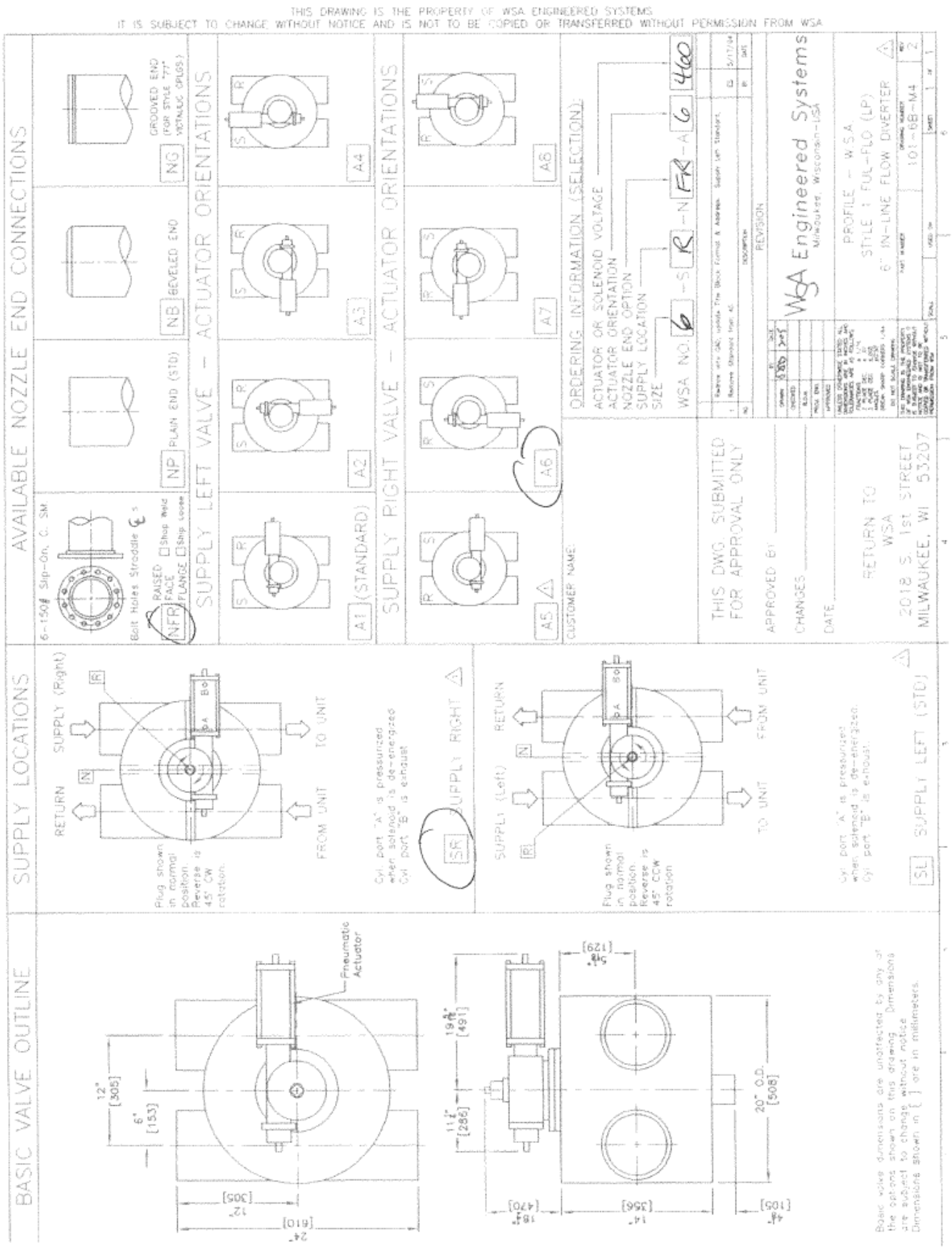
THIS DRAWING IS THE PROPERTY OF WSA ENGINEERED SYSTEMS
IT IS SUBJECT TO CHANGE WITHOUT NOTICE AND IS NOT TO BE COPIED OR TRANSFERRED WITHOUT PERMISSION FROM WSA
AVAILABLE NOZZLE END CONNECTIONS
SUPPLY LEFT VALVE – ACTUATOR ORIENTATIONS
SUPPLY RIGHT VALVE – ACTUATOR ORIENTATIONS
ORDERING INFORMATION (SELECTION)
ACTUATOR OR SOLENOID VOLTAGE
ACTUATOR ORIENTATION
NOZZLE END OPTION
SUPPLY LOCATION
SIZE
WSA NO. 6 -S R -N FR -A 6 460
THIS DWG. SUBMITTED FOR APPROVAL ONLY
APPROVED BY
CHANGES
DATE
RETURN TO WSA
2018 S. 1st STREET
MILWAUKEE, WI 53207
WSA Engineered Systems
Milwaukee, Wisconsin-USA
PROFILE – W.S.A.
STYLE 1 FUL-FLO (LP)
6" IN-LINE FLOW DIVERTER
101-6B-M4
SUPPLY LOCATIONS
SUPPLY (Right)
SUPPLY (Left)
RETURN
FROM UNIT
TO UNIT
SUPPLY RIGHT
SUPPLY LEFT (STD)
BASIC VALVE OUTLINE
Pneumatic Actuator
12" [305]
6" [153]
24" [610]
20" O.D. [508]
Basic valve dimensions are unaffected by any of the options shown on this drawing. Dimensions are subject to change without notice. Dimensions shown in [ ] are in millimeters.

Technical Specifications : Vapor Absorption Chiller
1. Full Load

Client	-	Version	2.0.0.0
Enquiry No.	-	Date	9/15/2011, 10:10 AM
Project	-	Model	LT 10 C

	Description	Unit	
	Cooling Capacity (± 3 %) :	**TR**	**128.0**
A	**Cycle Co-efficient of Performance**		**0.74**
B	**Chilled Water Circuit :**		
1.	Chilled water flow	gallon/min	204.5
2.	Chilled water inlet temperature	°F	57.0
3.	Chilled water outlet temperature	°F	42.0
4.	Evaporator passes	No.	2
5.	Chilled water circuit friction loss	ftLC	4.6
6.	Chilled water circuit pressure drop	ftLC	5.8
7.	Chilled water Connection diameter	NPS	6.0
8.	Glycol type		NA
9.	Chilled water glycol %	%	0.0
10.	Maximum working pressure	psi(g)	150
C	**Cooling Water Circuit:**		
1.	Heat rejected	MBH	3597.8
2.	Cooling water flow	gallon/min	818.0
3.	Cooling water inlet temperature	°F	80.0
4.	Cooling water outlet temperature	°F	88.8
5.	Absorber / Condenser passes	No.	1/1
6.	Cooling water circuit friction loss	ftLC	12.0
7.	Cooling water circuit pressure drop	ftLC	8.7
8.	Cooling water connection diameter	NPS	8.0
9.	Glycol type		NA
10.	Cooling water glycol %	%	0.0
11.	Maximum working pressure	psi(g)	150

D	**Hot Water Circuit :**		
1.	Heat input	MBH	2061.8
2.	Hot water flow	gallon/min	175.8
3.	Hot water inlet temperature	°F	207.5
4.	Hot water outlet temperature	°F	183.2
5.	Generator passes	No.	8
6.	Hot water circuit friction loss	ftLC	31.2
7.	Hot water circuit pressure drop	ftLC	32.9
8.	Hot water connection diameter	NPS	4.0
9.	Glycol Type		NA
10.	Hot water glycol %	%	0.0
11.	Maximum working pressure	psi(g)	150
E	**Electrical Data :**		
1.	Power supply		460 V ± 10%, 60 Hz ± 5%, 3 Phase + N
2.	Power consumption	kVA	7.6
3.	Absorbent pump rating	kW (A)	1.5 (5.0)
4.	Refrigerant pump rating	kW (A)	0.3 (1.4)
5.	Vacuum pump rating	kW (A)	0.75 (1.9)
F	**Physical Data :**		
1.	Length	in	162
2.	Width	in	60
3.	Height	in	100
4.	Operating weight (+/- 10%)	lbs	15432
5.	Shipping Weight (+/- 10%)	lbs	13889
6.	Tube cleaning space	in	126
G	**Tube Metallurgy :**		
1.	Evaporator tube material		Cu Enhanced
2.	Absorber tube material		Cu Enhanced
3.	Condenser tube material		Cu Enhanced
4.	Generator tube material		Cu Enhanced
5.	Evaporator tube thickness	in	Standard
6.	Absorber Tube Thickness	in	Standard
7.	Condenser tube thickness	in	Standard
H	**Low Temperature Heat exchanger Type**		**NonStandard**
I	**Fouling Factor:**		
1.	Chilled water fouling factor	ft² Hr °F/BTU	0.0001
2.	Cooling water fouling factor	ft² Hr °F/BTU	0.00025

3.	Hot water fouling factor	ft^2 Hr °F/BTU	0.0001

PS:

1. The above performance is valid for insulated chillers, installed indoors.
2. For non-insulated chiller, the capacity & heat source consumption will vary.
3. Please contact Thermax representative/office for customized specifications.

Technical Specifications : Vapor Absorption Chiller
2. Part Load

Client	-	Version	2.0.0.0
Enquiry No.	-	Date	9/15/2011, 8:55 PM
Project	-	Model	LT 10 C

	Description	Unit	
	Cooling Capacity (± 3 %) :	**TR**	**82.0**
A	**Cycle Co-efficient of Performance**		**0.73**
B	**Chilled Water Circuit :**		
11.	Chilled water flow	gallon/min	131.0
12.	Chilled water inlet temperature	°F	57.0
13.	Chilled water outlet temperature	°F	42.0
14.	Evaporator passes	No.	2
15.	Chilled water circuit friction loss	ftLC	6.4
16.	Chilled water circuit pressure drop	ftLC	7.6
17.	Chilled water Connection diameter	NPS	4.0
18.	Glycol type		NA
19.	Chilled water glycol %	%	0.0
20.	Maximum working pressure	psi(g)	150
C	**Cooling Water Circuit:**		
12.	Heat rejected	MBH	2312.8
13.	Cooling water flow	gallon/min	600.0
14.	Cooling water inlet temperature	°F	80.0
15.	Cooling water outlet temperature	°F	87.8
16.	Absorber / Condenser passes	No.	1/1
17.	Cooling water circuit friction loss	ftLC	6.6
18.	Cooling water circuit pressure drop	ftLC	3.3
19.	Cooling water connection diameter	NPS	8.0
20.	Glycol type		NA
21.	Cooling water glycol %	%	0.0
22.	Maximum working pressure	psi(g)	150

D	**Hot Water Circuit :**		
12.	Hot water flow	gallon/min	113.3
13.	Hot water inlet temperature	°F	207.5
14.	Hot water outlet temperature	°F	183.2
15.	Generator passes	No.	8
16.	Hot water circuit friction loss	ftLC	26.5
17.	Hot water circuit pressure drop	ftLC	28.2
18.	Hot water connection diameter	NPS	3.2
19.	Glycol Type		NA
20.	Hot water glycol %	%	0.0
21.	Maximum working pressure	psi(g)	150
E	**Electrical Data :**		
1.	Power supply		460 V ± 10%, 60 Hz ± 5%, 3 Phase+N
2.	Power consumption	kVA	7.6
3.	Absorbent pump rating	kW (A)	1.5 (5.0)
4.	Refrigerant pump rating	kW (A)	0.3 (1.4)
5.	Vacuum pump rating	kW (A)	0.75 (1.9)
F	**Physical Data :**		
1.	Length	in	162
2.	Width	in	60
3.	Height	in	100
4.	Operating weight (+/- 10%)	lbs	15432
5.	Shipping Weight (+/- 10%)	lbs	13889
6.	Tube cleaning space	in	126
G	**Tube Metallurgy :**		
1.	Evaporator tube material		Cu Enhanced
2.	Absorber tube material		Cu Enhanced
3.	Condenser tube material		Cu Enhanced
4.	Generator tube material		Cu Enhanced
5.	Evaporator tube thickness	in	Standard
6.	Absorber Tube Thickness	in	Standard
7.	Condenser tube thickness	in	Standard
H	**Low Temperature Heat exchanger Type**		**NonStandard**
I	**Fouling Factor:**		
1.	Chilled water fouling factor	ft² Hr °F/BTU	-
2.	Cooling water fouling factor	ft² Hr °F/BTU	-
3.	Hot water fouling factor	ft² Hr °F/BTU	-

PS:

4. The above performance is valid for insulated chillers, installed indoors.
5. For non-insulated chiller, the capacity & heat source consumption will vary.
6. Please contact Thermax representative/office for customized specifications.

APPENDIX D:
Mechanical & Structural Documents

Appendix D - Mechanical & Structural Documents

DRAWING INDEX

DRAWING #	REV. DATE	DRAWING TITLE
T–1	07/17/12	TITLE SHEET
M–0.1	07/17/12	LEGEND & SCHEDULES
M–2.1	07/17/12	OVERALL CENTRAL PLANT MECHANICAL GENERAL ARRANGEMENT
M–2.2	07/17/12	OVERALL CENTRAL PLANT MECHANICAL GENERAL ARRANGEMENT
M–2.3	07/17/12	OVERALL CENTRAL PLANT MECHANICAL GENERAL ARRANGEMENT
M–2.4	07/17/12	OVERALL CENTRAL PLANT MECHANICAL GENERAL ARRANGEMENT
M–3.1	07/17/12	DETAILS
M–3.2	07/17/12	DETAILS
M–3.3	07/17/12	DETAILS
M–4.1	07/17/12	PROPOSED COGENERATION PROCESS FLOW DIAGRAM AND INSTRUMENTATION
M–4.2	07/17/12	PROPOSED COGENERATION PROCESS FLOW DIAGRAM AND INSTRUMENTATION
M–4.3	07/17/12	PROPOSED COGENERATION PROCESS FLOW DIAGRAM AND INSTRUMENTATION
M–4.4	07/17/12	PROPOSED COGENERATION PROCESS FLOW DIAGRAM AND INSTRUMENTATION
M–4.5	07/17/12	PROPOSED COGENERATION PROCESS FLOW DIAGRAM AND INSTRUMENTATION
M–4.6	07/17/12	COGENERATION PROCESS FLOW DIAGRAM
M–4.7	07/17/12	SPACE HEATING HOT WATER SYSTEM PROCESS FLOW DIAGRAM
M–4.8	07/17/12	CHILLED AND CONDENSING WATER FLOW DIAGRAM
M–4.9	07/17/12	HEAT RECOVERY AND GENERATOR LOOP DIAGRAMS
M–4.10	07/17/12	PIPING DIAGRAMS
S–1.0	05/29/12	GENERAL NOTES
S–2.1	05/29/12	PARTIAL PLANS & DETAILS
S–5.1	05/29/12	DETAILS
E–1.0	06/29/12	ELECTRICAL NOTES, SYMBOLS AND DRAWING LIST
E–1.1	06/29/12	CENTRAL PLANT MAIN SERVICE SINGLE LINE DIAGRAM
E–1.2	06/29/12	MCC 'A' AND FUEL CELL MCC SINGLE LINE DIAGRAM
E–1.6	06/29/12	ELECTRICAL CONDUIT AND CABLE SCHEDULE
E–2.0	06/29/12	ELECTRICAL POWER SITE PLAN – FRF U/G FEEDER ROUTE
E–2.1	06/29/12	CENTRAL UTILITY PLANT BLDG. POWER AND GROUNDING PLAN
E–2.2	06/29/12	CENTRAL UTILITY PLANT ELECTRICAL ROOM PLAN & ELEVATION
E–2.3A	06/29/12	CENTRAL UTILITY PLANT EXTERIOR PLAN SHEET 1
E–2.3B	06/29/12	CENTRAL UTILITY PLANT EXTERIOR PLAN SHEET 2
E–2.4	06/29/12	ELECTRICAL ROOM CABLE TRAY SUPPORT PLAN
E–2.5	06/29/12	ELECTRICAL DETAILS, SHEET 1
E–2.7	06/29/12	ELECTRICAL PANEL SCHEDULES
T–24	07/17/12	TITLE 24 COMPLIANCE

MICROGRID PROJECT
SMUD
SACRAMENTO, CALIFORNIA

KEY PROJECT PARTICIPANTS

OWNER & SITE:
SMUD
SACRAMENTO MUNICIPAL UTILITY DISTRICT
6201 S STREET
SACRAMENTO, CA 95817
MARK RAWSON & BOB LABBE
916–732–6364 916–732–6811

MECHANICAL ENGINEER OF RECORD:
PETERS ENGINEERING
2411 ALHAMBRA BLVD, STE. 100
SACRAMENTO, CA 95817
JAN BLACK, PE
916–447–2841

ELECTRICAL ENGINEERING:
ENERGY–TECH CONSULTANTS
1166 OAKMONT PLACE
NIPOMO, CA 93444
F.W. (RICK) KUCHENIG, PE, CEM
760–532–3573

ABSORPTION CHILLER CONSULTANT:
INTEGRATED CHP SYSTEMS CORP.
50 WASHINGTON ROAD
PRINCETON JUNCTION, NJ 08550
GEAROID FOLEY
609–799–2340

SMART SWITCH CONSULTANT:
UNIVERSITY OF WISCONSIN
1415 ENGINEERING DR
MADISON, WI 53706–1691
BOB LASSETER
608–262–0186

MICROGRID CONSULTANT & CHP MANUFACTURER:
TECOGEN, INC.
45 FIRST AVENUE
WALTHAM, MA 02451
BOB PANORA
WILLIAM MARTINI
781–466–6400

ENGINEERING PROJECT MANAGER
DE SOLUTIONS, INC.
732 VAL SERENO DRIVE
ENCINITAS, CA 92024
KEITH DAVIDSON
858–832–1242

CONTRACT MANAGER:
CALIFORNIA ENERGY COMMISSION (CEC)
PIER PROGRAM
1516 9TH ST.
SACRAMENTO, CA 95814
STEVE GHADIRI
916–654–4388

PROJECT DATA

1. Use/Scope: PROVIDE NEW MICROGRID FOR SMUD DEMONSTRATION PROJECT.
2. Occupancy Group: NEW CONSTRUCTION B2
3. Const. Type: NA
4. Land Area: –
5. Stories: –
6. Energy Method: PRESCRIPTIVE
7. Auto. Fire System: N/A
8. Legal Description: –
9. Current Codes: ALL WORK SHALL CONFORM TO THE CURRENT APPLICABLE CODES INCLUDING BUT NOT LIMITED TO THE FOLLOWING:
   - A. CALIFORNIA BUILDING CODE (CBC 2007)
   - B. STATE ENERGY CODE 2008
10. Occupancy Calculation: NA
11. Existing Zoning: –
12. Seismic Zone: ZONE # 3

LOCATION PLAN

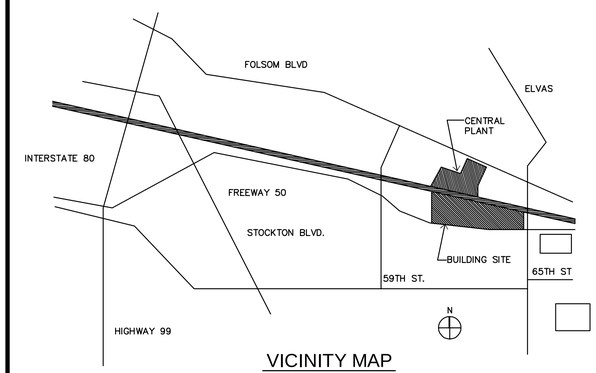

VICINITY MAP

GENERAL NOTES

1. Discrepancies between plans and specifications, large and small details or various sections of the drawings, shall be immediately brought to the attention of the Engineer for resolution.
2. Where on the drawings a portion of the work is noted or drawn out and the remainder is indicated in outline, the noted or drawn out portions shall apply.
3. The Contractor shall not scale the drawings. The drawings and specifications are complementary and what is required by anyone shall be as binding as if required by all.
4. Items of existing work, indicated to remain upon completion of the contract, but which require removal to complete the work shall be carefully removed and replaced upon completion. The replaced work shall match it's condition at the start of the work unless otherwise required by the drawings elsewhere herein.
5. Where existing interior partitions intercepting other interior or exterior partitions are to be removed, patch remaining wall at joint with the same existing materials so as to create a smooth and continuous surface with the adjacent wall area.
6. Repair and make good all damage to adjacent surfaces to remain as a part of the new work.
7. Removal and capping of services are to be done only as necessary.
8. Provide fire extinquishers as required by the Fire Department Field Inspector.
9. Legal exits shall be accessible at all times.
10. Refer to the Civil, HVAC, Plumbing, Electrical & Structural Drawings for additional demolition notes.
11. Demolition and removal work shall be performed to the extent shown, and shall include the demolition and removal of existing work as necessary to construct new or alteration work even though such demolition or removal work is not indicated or specified.
12. No cutting of existing work shall be done unless detailed on the approved drawings.
13. Refer to the specifications for additional details and contract requirements. Comply with the latest editions. Unless otherwise noted. Of all federal, state and local codes and regulations, and those codes, regulations and standards referenced in the specifications, and the following codes. Standard and regulation.

TITLE 24, PART 2, 2010 CBC	IBC 2005, INCLUDING STATE OF CALIFORNIA AMENDMENTS
TITLE 24, PART 3, 2010 CEC	NFPA 70, INCLUDING STATE OF CALIFORNIA AMENDMENTS
TITLE 24, PART 4, 2010 CMC	UMC 2009, INCLUDING STATE OF CALIFORNIA AMENDMENTS
TITLE 24, PART 5, 2010 CPC	UPC 2009, INCLUDING STATE OF CALIFORNIA AMENDMENTS
TITLE 24, PART 6, 2010 CEC	NEC 2008, INCLUDING STATE OF CALIFORNIA AMENDMENTS
TITLE 19,	PUBLIC SAFETY DIVISION1, STATE FIRE MARSHAL REGULATIONS
CAL/OSHA	CODES STANDARDS AND REGULATIONS
ANSI/ASME 931.1	POWER PIPING CODE

14. The documents referenced on the drawings are an integral part of this work and are in addition to the notes contained on the drawings.
15. Furnishing of all labor, materials and supplies necessary for the construction and completion for the work shown on the drawings and specifications is the responsibility of the contractor.
16. Install all materials in accordance with the drawings. Specifications, manufacturers recommendations and applicable codes and standards.
17. All omissions or conflicts between various elements of the drawings or specifications shall be brought to the attention of the owner's representative of work.
18. Verify all dimensions and existing conditions weather or not shown on the drawings or referenced in the specifications. Prior to commencement of work.
19. Drawings are based on typical manufacturer supplied equipment and configuration. Verify concurrence of actual manufacturer equipment with that represented in the drawings. Obtain approval from the owner prior to making any required changes.
20. Provide and install all equipment, piping and instruments in accordance with manufacturer recommendations. Where those recommendations differ from that shown on the drawings, obtain clarification from the owner's representative prior to installation.
21. Verify the size, quantity and location for underground utilities interfering with required excavation. Location allowances of the underground utilities and some utilities may not be shown.
22. All work shall be new unless otherwise shall be noted.

NO.	DATE	REVISIONS
4	07/17/12	RE-ISSUE FOR PLAN CHECK

REGISTERED PROFESSIONAL ENGINEER
JAN P. BLACK
No. 028813
Exp. 6/30/14
MECHANICAL
STATE OF CALIFORNIA

PETERS engineering
2411 Alhambra Blvd, Ste. 100
Sacramento, CA 95817
Tel (916) 447-2841
www.peterseng.com
Job no. 10.063
consulting mechanical and electrical engineers

SMUD
SACRAMENTO MUNICIPAL UTILITY DISTRICT

DESIGNED:	JB
DRAWN:	JM
APPROVED:	
DATE:	JULY 17, 2012
SCALE:	NONE

MICROGRID PROJECT

TITLE SHEET

JOB NO.

SHEET NO. T – 1 OF SHEETS

\10.063\dwgs\T-1.dwg, 7/18/2012 7:07:22 AM, jmathews, 1:1

WATER COOLED CENTRIFUGAL CHILLER SCHEDULE

MARK	CARRIER MODEL NO.	CAPACITY TONS	EVAPORATOR GPM	EVAPORATOR EWT °F / LWT °F	EVAPORATOR PD (FT.)	EVAPORATOR NO. OF PASSES	CONDENSER GPM	CONDENSER EWT / LWT	CONDENSER PD (FT.)	CONDENSER NO. OF PASSES	ELECTRICAL V/ø/HZ	ELECTRICAL KW	ELECTRICAL KW/TON	ELECTRICAL MCA	ELECTRICAL MOCP	ELECTRICAL REFRIGERANT	ELECTRICAL NPLV	APPROX. OPER. WT. LBS.	REMARKS
CH-3	19XRV4647385KFH64	500	998.5	54 / 42	17.5	2	1500	85.0 / 94.3	20.8	2	460/3/60	296	0.591	502	600	R-134a	0.389	23,000	SEE NOTES 1, 2

NOTES:
1. PROVIDE WITH SINGLE POINT ELECTRICAL CONNECTION.
2. PROVIDE "WATER TECHNOLOGY" 10" 4 WAY REVERSING VALVE, STYLE HX WITH SEPARATE 460V-3ø-60HZ ELECTRICAL SERVICE. PROVIDE 120V-1ø POWER TO REVERSING VALVE.

LOW TEMPERATURE HOT WATER FIRED VAPOR ABSORPTION CHILLER

MARK	MANUFACTURER AND MODEL NO.	CAPACITY TONS	EVAPORATOR GPM	EVAPORATOR EWT °F / LWT °F	EVAPORATOR PD (FT.)	EVAPORATOR NO. OF PASSES	CONDENSER GPM	CONDENSER EWT / LWT	CONDENSER PD (FT.)	CONDENSER NO. OF PASSES	HOT WATER CIRCUIT EWT / LWT	HOT WATER CIRCUIT GPM	HOT WATER CIRCUIT PD (FT.)	HOT WATER CIRCUIT NO. OF PASSES	ELECTRICAL CIRCUIT V/ø/HZ	POWER CONSUMTION (KVA)	APPROX. OPER. WT. LBS.
ABCH-1	THERMAX LT 10 C	120	191	57 / 42	5.6	2	600	80.0 / 91.4	24.3	2	207.5 / 183.2	168	33.6	8	480/3/60	6.9	13,228

COOLING TOWER SCHEDULE

MARK	BAC MODEL NO.	CAPACITY TONS	TYPE	GPM	WB °F	EWT / LWT	FAN QUANTITY	FAN CFM EACH	FAN HP EACH	ELECTRICAL SERVICE V/ø/HZ	APPROX. OPER. WT. LBS.	REMARKS
CT-5 & 6	PT2-0809A-1J2	500	INDUCED DRAFT	1500	50	72 / 62	2	–	7.5	460/3/60	14,000	SEE NOTES 1-7

NOTES:
1. VARIABLE FREQUENCY DRIVE (SEE ELECTRICAL WORK). OWNER FURNISHED, CONTRACTOR INSTALLED.
2. EQUALIZATION LINE CONNECTION AT CENTER OF BASIN. (SEE PIPING DIAGRAM)
3. FLANGED CONNECTION.
4. BASIN HEATERS: (2) 8 KW AT 460/3/60. SEPARATE POWER SOURCE.
5. BASIN SWEEP SYSTEM
6. BOTTOM DRAIN CONNECTIONS
7. PREMIUM EFFICIENCY TEFC MOTORS

HEAT EXCHANGER SCHEDULE

MARK	MANUFACTURER AND MODEL NO.	FLOWRATE GPM PRIMARY SIDE	FLOWRATE GPM SECONDARY SIDE	INLET TEMP °F PRIMARY SIDE	INLET TEMP °F SECONDARY SIDE	OUTLET TEMP °F PRIMARY SIDE	OUTLET TEMP °F SECONDARY SIDE	PRESSURE DROP (PSI)	NO. OF PLATES	PASSES	WEIGHT (LBS)	REMARKS
HX-2	BELL & GOSSETT GPX AP7	90	110	233	120	183	160	4.0	39	1	280	SEE NOTES 1,3,4
HX-3	BELL & GOSSETT GPX AP22	90	300	233	80	183	94.5	4.0	43	1	1270	SEE NOTES 2,3,4

NOTES:
1. PROVIDE UNIT WITH 2"ø STEEL FEMALE NPT INLET/OUTLET CONNECTIONS.
2. PROVIDE UNIT WITH 4"ø FLANGED INLET/OUTLET CONNECTIONS.
3. PROVIDE UNIT WITH OUTDOOR INSTALLATION KIT.
4. LOCATE ALL VALVES AND FITTINGS FOR HEAT EXCHANGERS AWAY FROM UNIT AND SPACED TO ACCOMMODATE PIPE INSULATION.

AIR COOLED DRY COOLER UNIT SCHEDULE

MARK	EMERSON MODEL NO.	CAPACITY MBH	MOTOR FAN NO.	MOTOR FAN FLA EA	MOTOR FAN HP	EVAPORATOR GPM	EVAPORATOR EWT / LWT	EVAPORATOR PD (FT.)	ELECTRICAL SERVICE V/ø/HZ	MIN. AMPS	MAX FUSE SIZE	APPROX. OPER. WT. LBS.	REMARKS
ACDC-1	DNT 139A	145.3	2	3.4	3/4	24.0	139 / 125	5.4	460/3/60	–	–	600	SEE NOTES 1,2

NOTES:
1. CAPACITIES @ 115° F AMB.
2. SOUND ATTENUATION PACKAGE BY UNIT MFR.

WATER TREATMENT

MARK	"DOLPHIN" MODEL NO.	PIPE SIZE	PIPE SCHEDULE	VOLTS/PH/HZ	AMPS	MAXIMUM FLOW	SERVES	APPROX. OPER. WT. LBS.	REMARKS
WT-1	G3080-PVC	8"	80	480/1/60	3.7	900 GPM	CH-1	110	SEE NOTES 1,2
WT-2	G3120-PVC	12"	80	480/1/60	3.5	2000 GPM	CH-2	180	SEE NOTES 1,2
WT-3	G3080-PVC	8"	80	480/1/60	3.8	1500 GPM	CH-3	140	SEE NOTES 1,2
WT-4	G3060-PVC	6"	80	115/1/60	4.2	600 GPM	ABCH-1	110	SEE NOTES 1,2

NOTES:
1. PROVIDE WITH PVC FLANGES. 2. PROVIDE SIGNAL GENERATING PANEL WITH 20'-0" UMBILICAL CABLE.

SAND FILTER SCHEDULE

MARK	GRISWOLDS MODEL NO.	GPM	AREA SF	TDH FT. OF WATER	HP	AMPS	VOLTS/PH/HZ	SERVES	WEIGHT LBS	REMARKS
SF-1	SF-42CS HH	192	9.61	80	7.5	11	460/3/60	CT 5&6	6800	–

EXPANSION TANK SCHEDULE

MARK	WESSELS MODEL NO.	TYPE	GALLON ACCEPTANCE VOLUME	SIZE DIA	SIZE HEIGHT	LOCATION	SERVED	APPROX. OPER. WT. LBS.	REMARKS
ET-1	NVA400	DIAPHRAM	106	30"	49"	EQUIP YARD	HEAT RECOVERY PIPING	2000	SEE NOTES 1,2
ET-2	NVA85	DIAPHRAM	23	16"	37"	EQUIP YARD	COOLING PIPING	550	SEE NOTES 1,2

NOTES:
1. ASME 125 PSIG RATED. 2. NPT PIPE CONNECTION.

NOTES:

1. ALL EQUIPMENT IN SCHEDULE IS SHOWN FOR REFERENCE ONLY. IT IS OWNER FURNISHED, CONTRACTOR INSTALLED.

CHEMICAL FEEDER SCHEDULE

MARK	MANUFACTURER AND MODEL NO.	CAPACITY	LOCATION	SERVES	REMARKS
CF-1	GRISWOLD FB-5	5 GAL	EQUIPMENT YARD	HEATING WATER	1,2,3,4 & 5
CF-2	GRISWOLD FB-5	5 GAL	EQUIPMENT YARD	CHILLED WATER	1,2,3,4 & 5

NOTES:
1. PROVIDE FP-75 FUNNEL PACKAGE.
2. PROVIDE VP-75 VALVE PACKAGE.
3. FILL SYSTEM WITH 10% PROPYLENE GLYCOL.
4. 25 MICRON FILTER BAGS.
5. PROVIDE P-12 SUPPORT PEDISTAL AND MOUNT PER MFR'S INSTRUCTIONS

TECOGEN GENERATORS

MARK	MFR.	GAS INPUT	GAS PRESSURE	HOT WATER FLOW	MAX LVG. WATER TEMP	MAX ENT. WATER TEMP	ELECTRICAL V//ø/HZ	WEIGHT (LBS)	REMARKS
G-1	TECOGEN	1238 CFH	10-28" WC	30 GPM	230° F	180° F	480/3/60	6,000	1,2
G-2	TECOGEN	1238 CFH	10-28" WC	30 GPM	230° F	180° F	480/3/60	6,000	1,2
G-3	TECOGEN	1238 CFH	10-28" WC	30 GPM	230° F	180° F	480/3/60	6,000	1,2

NOTE:
1. OWNER FURNISHED, CONTRACTOR INSTALLED. 2. CONTRACTOR TO CONTACT UNIT MFR. AND SUBMIT PRE-START CHECK LIST AT LEAST 2 WEEKS PRIOR TO UNIT START-UP.

REVERSING VALVE

MFRG./ MARK	MODEL NO.	CONTROL VALVE	REMARKS
WSA-1	6-SR-NFR-A6-460	CV66	1
WSA-2	10-SR-NP-AI-120	CV30	2

NOTE:
1. CONTROL PANEL REQUIRES 460/1/60 POWER.
2. CONTROL PANEL REQUIRES 120/1/60 POWER.

EXHAUST FAN SCHEDULE

MARK	GREENHECK MODEL NO.	FAN CFM	FAN S.P.	FAN LWA	FAN RPM	MOTOR HP	MOTOR SERVICE V/ø/HZ	MOTOR MOTOR TYPE	LOCATION	SONES	WEIGHT LBS	REMARKS
WEF-1	SE1-20-424-B4	3000	0.1	71	1020	1/4	115/1/60	PSC	ELECT. EQUIP. ROOM	9.8	80	SEE NOTES 1,2,3,4,5,6

NOTES:
1. PROVIDE WITH SPEED CONTROL SWITCH MOUNTED ON SIDE OF UNIT.
2. PROVIDE WITH BACKDRAFT DAMPER.
3. PROVIDE WITH THERMAL OVERLOAD.
4. PROVIDE WITH EXTENDED LUBE LINES.
5. PROVIDE WITH WALL HOUSING, FLUSH EXTERIOR WITH OSHA GUARD.
6. SWITCH ON/OFF WITH IN-LINE THERMOSTAT SET AT 80°F.

PUMP SCHEDULE

MARK	PACO MODEL NO.	DESIGN GPM	DESIGN TH. FT. OF WATER	IMPELLER DIA. (IN)	VOLTS/PH/ HZ	HP	RPM	LOCATION	WEIGHT (LBS)	REMARKS
CDWP-4A	4012A LF	850	95	10.41	460/3/60	25	1780	EQUIP YARD	960	SEE NOTES 1,2,3,4
CDWP-4B	4012A LF	850	95	10.41	460/3/60	25	1780	EQUIP YARD	960	SEE NOTES 1,2,3,4
PCHWP-4A	25957 LF	191	60	7.84	460/3/60	7.5	1775	EQUIP YARD	320	SEE NOTES 1,2,3,4
PCHWP-4B	25957 LF	191	60	7.84	460/3/60	7.5	1775	EQUIP YARD	320	SEE NOTES 1,2,3,4
CDWP-3	60123 LF	1500	40	11.28	460/3/60	20	1187	CENTRAL PLANT	700	SEE NOTES 1,2,3
PCHP-3	60123 LF	1000	50	11.08	460/3/60	15	1187	CENTRAL PLANT	1000	SEE NOTES 1,2,3
HXP-2A	20709 LF	105	50	6.98	460/3/60	2	1765	EQUIP YARD	220	SEE NOTES 1,2,3,4
HXP-2B	20709 LF	105	50	6.98	460/3/60	2	1765	EQUIP YARD	220	SEE NOTES 1,2,3,4
HWC-1A	15705 LF	78	30	5.71	460/3/60	1	1765	EQUIP YARD	200	SEE NOTES 1,2,3,4
HWC-1B	15705 LF	78	30	5.71	460/3/60	1	1765	EQUIP YARD	200	SEE NOTES 1,2,3,4
AHWP-1A	15955 LF	90	60	8.27	460/3/60	3	1765	EQUIP. YARD	300	SEE NOTES 1,2,3,4
AHWP-1B	15955 LF	90	60	8.27	460/3/60	3	1765	EQUIP. YARD	300	SEE NOTES 1,2,3,4

NOTES:
1. PROVIDE PREMIUM EFFICIENCY, NON-OVERLOADING MOTOR.
2. BASE MOUNTED PUMP.
3. PROVIDE SUCTION DIFFUSER BY PUMP MFR.
4. VARIABLE FREQUENCY DRIVE, OWNER FURNISHED, CONTRACTOR INSTALLED.

MECHANICAL LEGEND

AC	AIR CONDITIONING	MOCP	MAXIMUM OVER CURRENT PROTECTION
AD	ACCESS DOOR	M	MOTORIZED DAMPER
AE	AIR EXTRACTOR	MVD	MANUAL VOLUME DAMPER
AFF	ABOVE FINISHED FLOOR	(N)	NEW
AL	ACOUSTICAL LINING	OBD	OPPOSED BLADE DAMPER
BDD	BACKDRAFT DAMPER	OC	ON CENTER
BHP	BRAKE HORSEPOWER	OPNG.	OPENING
CD	CONDENSATE DRAIN	OSA	OUTSIDE AIR
CFM	CUBIC FEET PER MINUTE	ø	PHASE
CEF	CEILING EXHAUST FAN	PAWR	PRIMARY AUXILIARY WATER RETURN
℄	CENTERLINE	PAWS	PRIMARY AUXILIARY WATER SUPPLY
CHWS	CHILLED WATER SUPPLY	PJWR	PRIMARY JACKET WATER RETURN
CHWR	CHILLED WATER RETURN	PJWS	PRIMARY JACKET WATER SUPPLY
CWS	CONDENSER WATER SUPPLY	POC	POINT OF CONNECTION
CWR	CONDENSER WATER RETURN	PSI	POUNDS PER SQUARE INCH
DB	DRY BULB	QTY	QUANTITY
DL	DOOR LOUVER	RA	RETURN AIR
DN.	DOWN	RD	RETURN DIFFUSER
EA	EXHAUST AIR	REF	ROOF EXHAUST FAN
EAL	EXHAUST AIR LOUVER	RH	RADIANT HEATER
EAT	ENTERING AIR TEMPERATURE	RL	REFRIGERANT LIQUID
EF	EXHAUST FAN	RPM	REVOLUTION PER MINUTE
(E)	EXISTING	RR(G)	RETURN REGISTER (GRILLE)
EG	EXHAUST GRILLE	RS	REFRIGERANT SUCTION
ESP	EXTERNAL STATIC PRESSURE	S	SENSOR
EX	EXHAUST	SM	SHEET METAL
°F	DEGREES FAHRENHEIT	SA	SUPPLY AIR
FA	FRESH AIR	SD(R)(G)	SUPPLY DIFFUSER (REGISTER) (GRILLE)
FAL	FRESH AIR LOUVER	SJWR	SECONDARY JACKET WATER RETURN
FC	FLEXIBLE CONNECTION	SJWS	SECONDARY JACKET WATER SUPPLY
FD	FIRE DAMPER	SS	STAINLESS STEEL
FSD	FIRE/SMOKE DAMPER	T	THERMOSTAT
FPM	FEET PER MINUTE	TCP	TEMPERATURE CONTROL PANEL
FLA	FULL LOAD AMPS	TEMP.	TEMPERATURE
FT	FOOT OR FEET	TD	TRANSFER DUCT
GA	GAUGE	TG	TRANSFER GRILLE
GI	GALVANIZED IRON	TSP	TOTAL STATIC PRESSURE
GPM	GALLONS PER MINUTE	TV	TURNING VANES
GSM	GALVANIZED SHEET METAL	TYP	TYPICAL
H&V	HEATING & VENTILATION	UCD	UNDERCUT DOORS
HZ	HERTZ	UTR	UP THRU ROOF
HP	HORSE POWER	V	VOLTS
ICW	INDUSTRIAL COLD WATER	VAV	VARIABLE AIR VOLUME
IF	INDOOR FAN	VFD	VARIABLE FREQUENCY DRIVE
LAT	LEAVING AIR TEMPERATURE	W/	WITH
LBS.	POUNDS	WC	WATER COLUMN
LRA	LOCK ROTOR AMPS	WB	WET BULB
MBH	THOUSAND BTU PER HOUR	WT.	WEIGHT
MAX.	MAXIMUM		
MCA	MINIMUM CIRCUIT AMPACITY		
MFR	MANUFACTURER		
MIN.	MINIMUM		

PIPING SYMBOLS & ABBREVIATIONS

- GATE VALVE (GV)
- GLOBE VALVE (GLV)
- NEEDLE VALVE
- BUTTERFLY VALVE (BFV)
- BALL VALVE (BLV)
- BALANCE VALVE (BV)
- DIAPHRAGM VALVE
- PLUG VALVE
- CHECK VALVE (CHV)
- SAFETY RELIEF VALVE
- PRESSURE RELIEF VALVE
- PRESSURE REGULATING VALVE
- AUTOMATIC AIR VENT (AAV)
- MANUAL AIR VENT (MAV)
- PRESSURE GAUGE (PG)
- FLEXIBLE CONNECTION (FC)
- FLOW METERING DEVICE (FMD) (BALANCE VALVE)
- 2-WAY CONTROL VALVE ELECTRIC ACTIVATOR (E) PNEUMATIC ACTIVATION (P)
- 3-WAY CONTROL VALVE ELECTRIC ACTIVATOR (E) PNEUMATIC ACTIVATION (P)
- SOLENOID VALVE
- BUTTERFLY VALVE(W/OPERATOR)
- TRIPLE DUTY VALVE
- THERMOMETER (TH)
- PUMP
- FLOW MEASURING STATION
- STRAINER (S)
- UNION
- FLANGED CONNECTION
- BLIND FLANGE
- ALIGNMENT GUIDE
- THERMOMETER WELL
- PIPE ANCHOR
- CONCENTRIC REDUCER
- ECCENTRIC REDUCER
- ELBOW DOWN
- ELBOW UP
- TEE OUTLET UP
- TEE OUTLET DOWN
- PIPE CAP
- INSERTION FITTING OR (PETE'S PLUG)
- TEMPERATURE TRANSMITTER

PAWS	PRIMARY AUXILIARY WATER SUPPLY	HWS	HOT WATER SUPPLY
PAWR	PRIMARY AUXILIARY WATER RETURN	HWR	HOT WATER RETURN
SAWS	SECONDARY AUXILIARY WATER SUPPLY	CWS	CONDENSER WATER SUPPLY
SAWR	SECONDARY AUXILIARY WATER RETURN	CWR	CONDENSER WATER RETURN
ICW	INDUSTRIAL COLD WATER	CHWS	CHILLED WATER SUPPLY
G	NATURAL GAS	CHWR	CHILLED WATER RETURN
PJWS	PRIMARY JACKET WATER SUPPLY	N.O.	NORMALLY OPEN
PJWR	PRIMARY JACKET WATER RETURN	N.C.	NORMALLY CLOSED
		MPG	MEDIUM PRESSURE GAS

EQUIPMENT LIST (ALL EQUIPMENT PROVIDED BY SMUD)

(E) CH-1	CHILLER	(N) CF-1 & 2	CHEMICAL FEEDERS
(E) CH-2	CHILLER	(E) TF-1	TOWER FILTER
(N) CH-3	CHILLER	(E) TF-2	TOWER FILTER
(E) PCHWP-1	PRIMARY CHILLER WATER PUMP	(N) SF-3	SAND FILTER
(E) PCHWP-2	PRIMARY CHILLER WATER PUMP	(N) G-1	GENERATOR
(N) PCHWP-3	PRIMARY CHILLER WATER PUMP	(N) G-2	GENERATOR
(N) PCHWP-4A&4B	PRIMARY CHILLER WATER PUMP	(N) G-3	GENERATOR
(E) CDWP-1	CONDENSER WATER PUMP	(N) ACDC-1	AIR COOLED DRY COOLER
(E) CDWP-2	CONDENSER WATER PUMP	(N) HWC-1A & 1B	HOT WATER CIRC. PUMPS
(N) CDWP-3	CONDENSER WATER PUMP	(N) AHWP-1A & 1B	ABSORPTION HOT WATER PUMPS
(N) CDWP-4A&4B	CONDENSER WATER PUMP	(N) WEF-1	WALL EXHAUST FAN
(E) CT-1 & 2	COOLING TOWER	(N) WT-1,2,3,4	WATER TREATMENT
(E) CT-3 & 4	COOLING TOWER	(N) VFD-S	VARIABLE FREQUENCY DRIVES (SEE ELECT.)
(N) CT-5 & 6	COOLING TOWER		
(N) ET-1 & 2	EXPANSION TANKS		
(N) HX-2 & 3	HEAT EXCHANGERS		

NO.	DATE	REVISIONS
4	07/17/12	RE-ISSUE FOR PLAN CHECK

REGISTERED PROFESSIONAL ENGINEER JAN P. BLACK No. 028813 Exp. 6/30/14 MECHANICAL STATE OF CALIFORNIA

PETERS engineering
2411 Alhambra Blvd, Ste. 100
Sacramento, CA 95817
Tel (916) 447-2841
www.peterseng.com
Job no. 10.063
consulting mechanical and electrical engineers

SMUD
SACRAMENTO MUNICIPAL UTILITY DISTRICT

DESIGNED: JB
DRAWN: JM
APPROVED:
DATE: JULY 17, 2012
SCALE: AS NOTED

MICROGRID PROJECT

LEGEND, SCHEDULES

JOB NO.
SHEET NO. M-0.1
OF SHEETS

\10.063\dwgs\M-0.1.dwg, 7/17/2012 9:00:29 AM, jmathews, 1:1

(EXISTING) CENTRAL PLANT AUTOMATIC CONTROL VALVE SCHEDULE

SYMBOL	BUILDING LOCATION	DWG REF	SERVICE			OPERATION		GPM	PRES DROP PSID	C_V	SIZE	TYPE	REMARKS
			ISOL	PRES SUST	TEMP CONT	MOD	TWO POS						
CV 1	CENTRAL PLANT TES VALVE TREE	M-3.3	X				X	1200	0.1	5430	10"	PNU BFLY	
CV 2													
CV 3													
CV 4													
CV 5													
CV 6	CENTRAL PLANT TES VALVE TREE	M-3.3									10"	PNU BFLY	
CV 7	CENTRAL PLANT TES VALVE TREE	M-3.3	X				X	400	0.2	841	4"	PNU BALL	TES TANK FILL VALVE
CV 8	CENTRAL PLANT NEAR HX-1 IN CHWR	M-3.1			X	X		2000	0.05	10538	14"	PNU BALL	HX-1 CHW CONTROL VALVE PILOT POSITIONER
CV 9	CENTRAL PLANT NEAR HX-1 IN CHWR	M-3.1	X				X	2000	0.06	8077	12"	PNU BFLY	HX-1 CHW ISOLATION VALVE
CV 10	CENTRAL PLANT SOUTH END CWR PIPES	M-3.2						6000	0.01	8077	12"		CLOSED=COOLING TOWERS SPLIT OP'N OPEN=COOLING TOWERS PARALLEL OP'N
CV 11	AT CT-1/CT-2 IN 20" HEADER	M-3.2						6000	0.01	22339	20"		CLOSED=COOLING TOWERS SPLIT OP'N OPEN=COOLING TOWERS PARALLEL OP'N
CV 12	CENTRAL PLANT CH-1 CWR							900	0.01	3316	8"		CHANGEOVER VALVE FOR CHILLER CONDENSER BRUSH CLEANING CYCLE.
CV 13											8"		
CV 14											8"		
CV 15	CENTRAL PLANT CH-1 CWR										8"		
CV 16	CENTRAL PLANT CH-2 CWR							2000	0.1	8077	12"		
CV 17											12"		
CV 18											12"		
CV 19	CENTRAL PLANT CH-2 CWR		X				X				12"	PNU BFLY	CHANGEOVER VALVE FOR CHILLER CONDENSER BRUSH CLEANING CYCLE.
CV 20	CENTRAL PLANT CH-2 CWR	M-3.2			X	X		1100	0.1	5430	10"	PNU BALL	PILOT POSITIONER
CV 21	CENTRAL PLANT NEAR S.W. CORNER	M-3.4	X				X	32	1.0	32	1"	PNU BALL	IN LINE FROM SYSTEM CHWR TO EXPANSION TANKS ET-1A/1B
CV 22	CENTRAL PLANT NEAR S.W. CORNER	M-3.4	X				X	2500	0.1	10538	14"	PNU BFLY	ISOLATES CENTRAL PLANT FROM SITE - CHWS LINE
CV 23	CENTRAL PLANT NEAR S.W. CORNER	M-3.4	X				X	2500	0.1	10538	14"	PNU BFLY	ISOLATES CENTRAL PLANT FROM SITE - CHWR LINE
CV 24	CENTRAL PLANT SOUTH END NEAR CWR PIPES	M-3.2	X				X	600	0.3	841	4"	PNU BALL	COOLING TOWERS FILL VALVE
PSV 1	CENTRAL PLANT NEAR S.W. CORNER	M-3.4		X		X		2500	1.01	2000	12"	ELECT. ROLL-- SEAL	PRESSURE SUSTAINING ELECTRIC PILOT 4-20MA 4-20MA SHAFT POSITION IND.
CV 31	CENTRAL PLANT BOILER ROOM NEAR B-1	M-4			X	X		1400	1.0	1400	10"	PNU 3-WAY	MAINTAINS MINIMUM HWR TEMPERATURE FOR BOILERS B-1 & B-2 (PLUS FUTURE B-3) PILOT POSITIONER
CV 32	CENTRAL PLANT NEAR HW EXP. TANK ET-2	M-4	X				X	32	1.0	32	1"	PNU BALL	IN LINE FROM SYSTEM HWR TO EXPANSION TANK ET-2
CV 41	CONTROL ROOM	AHU-1			X	X		4.26	2.3	2.9	1/2"	THR	HEATING
CV 42	CONTROL ROOM	AHU-2			X	X		4.26	2.3	2.9	1/2"	THR	HEATING
CV 43	CONTROL ROOM	AHU-1			X	X		4.34	2.35	2.9	1/2"	THR	COOLING
CV 44	CONTROL ROOM	AHU-2			X	X		4.34	2.35	2.9	1/2"	THR	COOLING
CV 45	PLANT	UH-1						11.0	2.3	7.4	3/4"		HEATING
CV 46	PLANT	UH-2											HEATING
CV 47	PLANT	UH-3											HEATING
CV 48	PLANT	UH-4											HEATING
CV 49	CHEMICAL TREAT. RM.	UH-5						2.1	2.7	1.2	1/2"		HEATING
CV 50	PARTS STORAGE	UH-6						3.8	2.6	1.9	1/2"		HEATING
CV 51	ELECTRICAL ROOM	UH-7						4.4	2.25	2.9	1/2"		HEATING
CV 52	SHOP STORAGE	UH-8						6.5	2.0	4.7	1/2"		HEATING
CV 53	SHOP STORAGE	UH-9						6.5	2.0	4.7	1/2"		HEATING
CV 54	CENTRAL SHOP	UH-10						16.0	7.0	12	1"		HEATING
CV 55	CENTRAL SHOP	UH-11						16.0	7.0	12	1"		HEATING

(NEW) AUTOMATIC CONTROL VALVE SCHEDULE

SYMBOL	LOCATION SERVES	DRWG REF	SERVICE			OPERATION		GPM	PRES DROP PSID	C_V	SIZE	TYPE	REMARKS
			ISOL	PRES SUST	TEMP CONT	MOD	TWO POS						
CV 27	CENTRAL PLANT CH-3 CWR	M4.8			X	X		1500	-	-	8"	ELECTRIC BUTTERFLY	CH-3 CONDENSER WATER BYPASS
CV 28	CENTRAL PLANT CH-3 CWS	M4.8	X				X	1500	-	-	8"	ELECTRIC BUTTERFLY	CH-3 CONDENSER WATER SUPPLY
CV 29	CENTRAL PLANT CH-3 CWR	M4.8	X				X	1500	-	-	8"	ELECTRIC BUTTERFLY	CH-3 CONDENSER WATER RETURN
CV 30	CENTRAL PLANT CH-3	M4.8					X	1500	-	-	8"	PNEUMATIC REVERSING VALVE	CH-3 TUBE BRUSHING REVERSING VALVE
CV 56	EQUIPMENT YARD CT-6	M4.1	X				X	750	-	-	8"	ELECTRIC BUTTERFLY	CT-6 ISOLATION VALVE
CV 57	EQUIPMENT YARD CT-5&6	M4.1	X			X		1500	-	-	10"	ELECTRIC BUTTERFLY	CT-5&6 ISOLATION VALVE
CV 58	EQUIPMENT YARD CT-6	M4.1	X				X	600/750	-	-	8"	ELECTRIC BUTTERFLY	CT-5 ISOLATION VALVE
CV 59	EQUIPMENT YARD CT-5&6	M4.1	X				X	1500	-	-	10"	ELECTRIC BUTTERFLY	CT-5&6 ISOLATION VALVE
CV 60	EQUIPMENT YARD ABCH-1	M4.1	X				X	600	-	-	8"	ELECTRIC	ABCH-1 CONDENSER WATER ISOLATION VALVE
CV 61	EQUIPMENT YARD ABCH-1	M4.1	X				X	600	-	-	8"	ELECTRIC	ABCH-1 CONDENSER WATER ISOLATION VALVE
CV 62	EQUIPMENT YARD CT-6	M4.1	X				X	750	-	-	8"	ELECTRIC	CT-6 ISOLATION VALVE
CV 63	EQUIPMENT YARD CT-5	M4.1	X				X	600/750	-	-	8"	ELECTRIC	CT-5 ISOLATION VALVE
CV 64	EQUIPMENT YARD HX-3	M4.1			X	X		250	-	-	4"	ELECTRIC	3-WAY DIVERTING VALVE
CV 65	EQUIPMENT YARD ABCH-1	M4.1			X	X		168	-	-	3"	ELECTRIC	3-WAY DIVERTING VALVE
CV 66	EQUIPMENT YARD ABCH-1	M4.1			X	X		600	-	-	8"	ELECTRIC	3-WAY DIVERTING VALVE
CV 67	EQUIPMENT YARD ABCH-1	M4.1						600			8"	ELECTRIC	ABCH-1 REVERSING VALVE
CV 68	EQUIPMENT YARD ABCH-1	M4.1	X				X	600			8"	ELECTRIC	ABCH-1 ISOLATION VALVE
CV 69	EQUIPMENT YARD ABCH-1	M4.1	X				X	600			8"	ELECTRIC	ABCH-1 ISOLATION VALVE
CV 70	EQUIPMENT YARD HX-2	M4.1			X	X		105			3"	ELECTRIC	HXP-2 3-WAY DIVERTING VALVE
CV 71	EQUIPMENT YARD ACDC-1	M4.1			X	X		24			1 1/2"	ELECTRIC	ACDC-1 3-WAY DIVERTING VALVE

NO.	DATE	REVISIONS
4	07/17/12	RE-ISSUE FOR PLAN CHECK

REGISTERED PROFESSIONAL ENGINEER JAN P. BLACK No. 028813 Exp. 6/30/14 MECHANICAL STATE OF CALIFORNIA

PETERS engineering
2411 Alhambra Blvd, Ste. 100
Sacramento, CA 95817
Tel (916) 447-2841
www.peterseng.com
Job no. 10.063
consulting mechanical and electrical engineers

SMUD
SACRAMENTO MUNICIPAL UTILITY DISTRICT

DESIGNED:	JB
DRAWN:	JM
APPROVED:	
DATE:	JULY 17, 2012
SCALE:	AS NOTED

MICROGRID PROJECT

SCHEDULES

JOB NO.

SHEET NO. M-0.2

OF SHEETS

\10.063\dwgs\M-0.2 SCHEDULES.dwg, 7/17/2012 9:00:31 AM, jmathews, 1:1

KEYED SHEET NOTES:

1. REMOVE (E) DOWN TURNED ELBOW AND CONNECT 8" CHWS TO (E) 14" CHWS STUB AT (E) BUTTERFLY VALVE WITH ECCENTRIC REDUCER.
2. REMOVE (E) DOWN TURNED ELBOW AND CONNECT 10" CHWR TO (E) 14" CHWR STUB AT (E) BUTTERFLY VALVE WITH ECCENTRIC REDUCER..
3. CONNECT 8" CWR TO (E) 18" CWR STUB WITH ECCENTRIC REDUCER, OVERHEAD.
4. CONNECT 8" CWS TO (E) 10" CWS STUB AT (E) BUTTERFLY VALVE WITH ECCENTRIC REDUCER.
5. INSTALL RUPTURE DISK VENT THROUGH ROOF, FLASH ROOF PENETRATION PER ROOF MANUFACTURER'S REQUIREMENTS. SUPPORT COPPER PIPE FROM ROOF STRUCTURE.
6. REINSTALL (E) EXPANSION TANKS ET-1A AND ET-1B AND ALL ASSOCIATED PIPING, VALVING AND APPURTANANCES ON (E) HOUSEKEEPING PAD.
7. REMOVE (E) EXPANSION TANKS AND ALL PIPING AND RELOCATE PER 2-M2.1. INSTALL WATER TREATMENT UNIT (E) CWR PIPE RISER. TRIM PVC INLET AND OUTLET PIPES AND GLUE CONNECTION FLANGES PER NOTE ON SHEET 3- M3.3. INSTALL SIGNAL GENERATING PANEL ON ADJACENT (E) UNISTRUT SUPPORT.
8. TRANSITION AS REQUIRED AND INSTALL WATER TREATMENT UNIT IN (E) CWR PIPE RISER. TRIM PVC INLET AND OUTLET PIPES AND GLUE CONNECTION FLANGES PER NOTE ON SHEET 3-M3.3. PROVIDE UNISTRUT SUPPORT AND INSTALL SIGNAL GENERATING PANEL ADJACENT TO PIPING.
9. INTERLOCK WIRING BETWEEN BRUSHING CONTROL PANEL, CHILLER AND REVERSING VALVE IS PROVIDED BY SIEMENS. 120 VAC POWER TO CONTROL PANEL AND REVERSING VALVE SEE DRAWINGS.
10. COPPER PNEUMATIC TUBING TO REVERSING VALVE FROM (E) PNEUMATIC LINES IS PROVIDED BY SIEMENS.

NOTES:
1. FOR COMPLETE VALVES AND FITTINGS, SEE CHILLED AND CONDENSING WATER FLOW DIAGRAM ON SHEETS M4.5-M4.9..
2. ALL EQUIPMENT IS SET IN PLACE ON CONCRETE PAD, NOT BOLTED DOWN, NO PIPING CONNECTED. CONTRACTOR TO INSTALL PER APPLICABLE DETAILS.

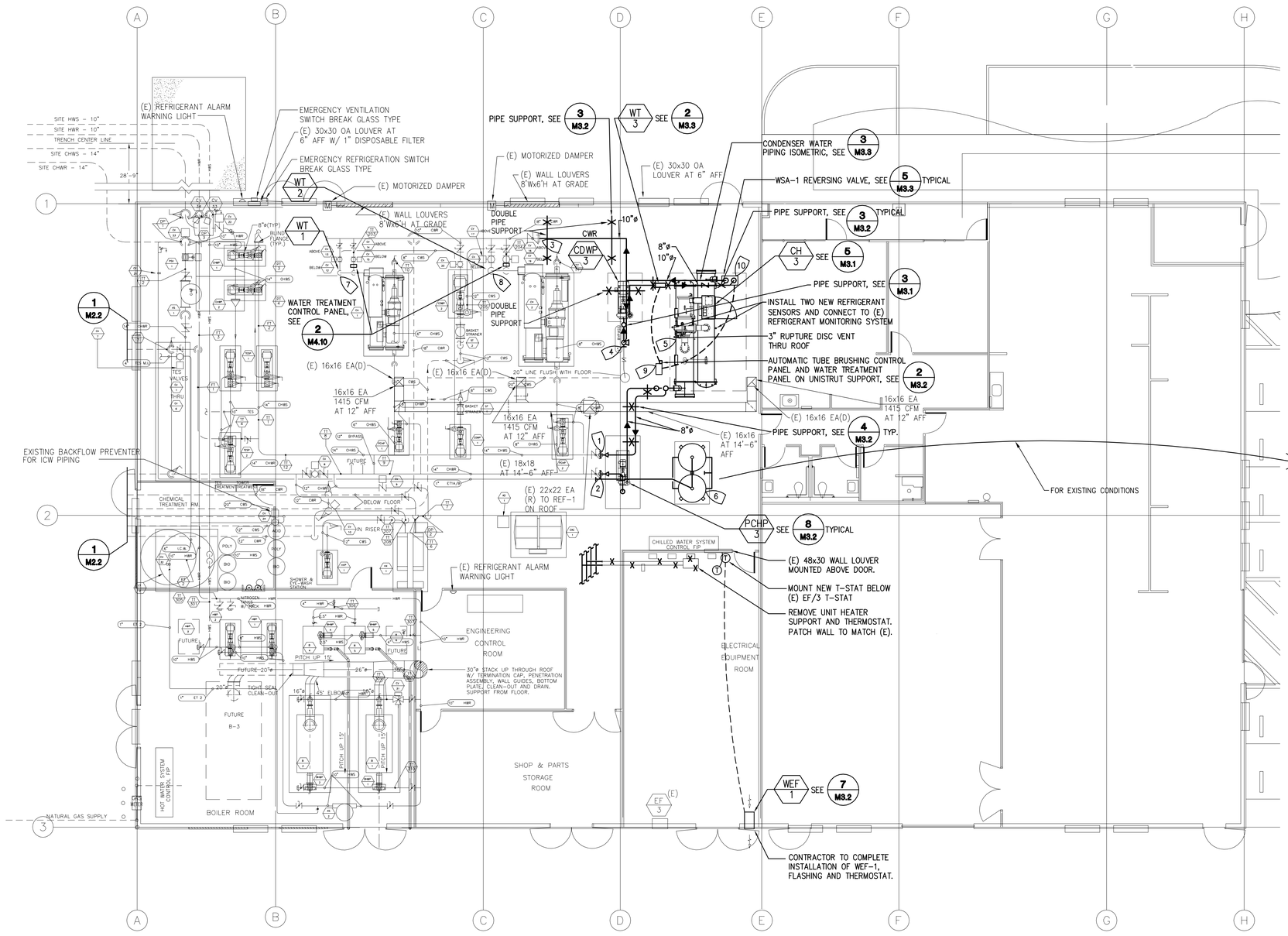

1 M-2.1 FIRST FLOOR PLAN - MECHANICAL
SCALE: 1/8"=1'-0"

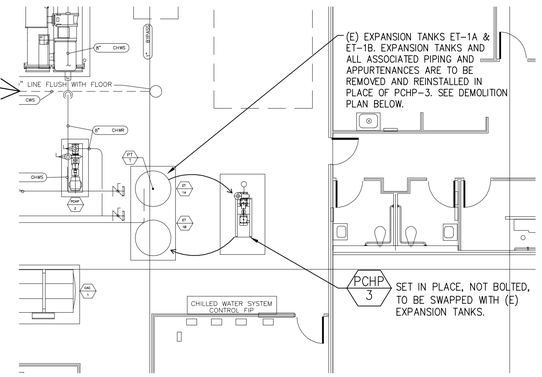

(E) FLOOR PLAN
SCALE: 1/8"=1'-0"

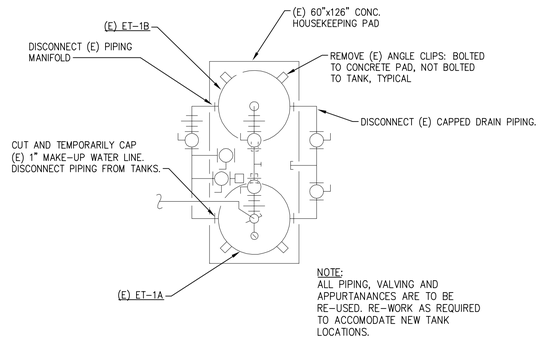

NOTE:
ALL PIPING, VALVING AND APPURTANANCES ARE TO BE RE-USED. RE-WORK AS REQUIRED TO ACCOMODATE NEW TANK LOCATIONS.

(E) DEMOLITION FLOOR PLAN
SCALE: 1/4"=1'-0"

2 M-2.1 EXPANSION TANK PIPING AND RELOCATION PLAN
SCALE: AS NOTED

NO.	DATE	REVISIONS
4	07/17/12	RE-ISSUE FOR PLAN CHECK

REGISTERED PROFESSIONAL ENGINEER JAN P. BLACK No. 028813 Exp. 6/30/14 MECHANICAL STATE OF CALIFORNIA

PETERS engineering
2411 Alhambra Blvd, Ste. 100
Sacramento, CA 95817
Tel (916) 447-2841
www.peterseng.com
Job no. 10.063
consulting mechanical and electrical engineers

SMUD
SACRAMENTO MUNICIPAL UTILITY DISTRICT

DESIGNED:	JB
DRAWN:	JM
APPROVED:	
DATE:	JULY 17, 2012
SCALE:	1/8"=1'-0"

MICROGRID PROJECT

OVERALL CENTRAL PLANT MECHANICAL GENERAL ARRANGEMENT

JOB NO.

SHEET NO. M-2.1

OF SHEETS

\10.063\dfwgs\M-2.1.dwg, 7/17/2012 9:00:33 AM, jmatthews, 1:1

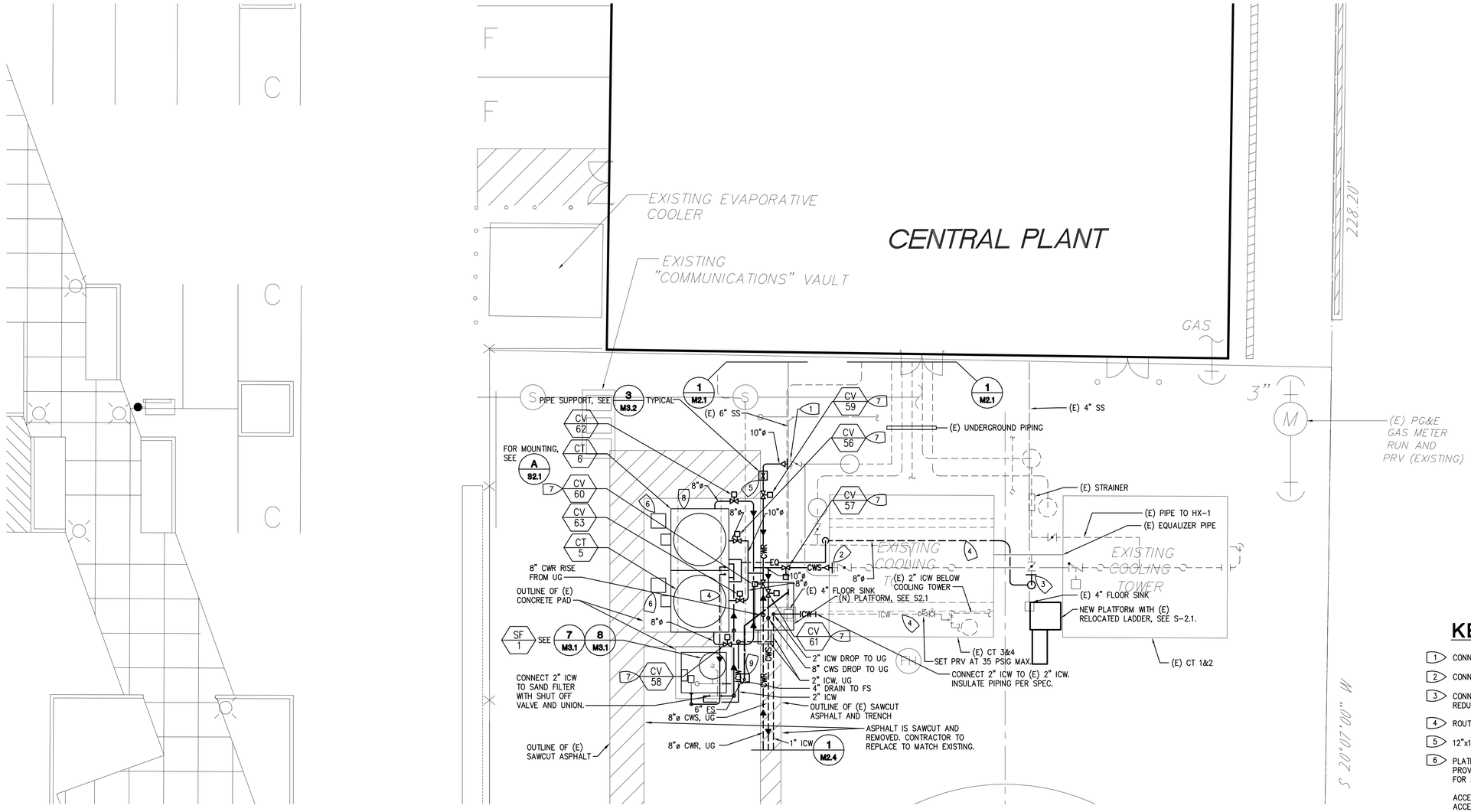

1 M-2.2 EQUIPMENT YARD PLAN - MECHANICAL

SCALE: 1/8"=1'-0"

KEYED SHEET NOTES:

1. CONNECT 10" CWR TO (E) 18" CWR STUB AT (E) VALVE WITH ECCENTRIC REDUCER.
2. CONNECT 10" CWS TO (E) CWS STUB AT (E) VALVE WITH ECCENTRIC REDUCER.
3. CONNECT 8" EQUALIZER LINE TO (E) 10" EQUALIZER STUB WITH ECCENTRIC REDUCER.
4. ROUTE PIPE BELOW COOLING TOWER.
5. 12"x12"x6" THICK CONCRETE FOOTING AT PIPE SUPPORT.
6. PLATFORM AND ACCESS LADDER AS MANUFACTURED BY BALTIMORE AIR COIL. PROVIDE OSHA APPROVED LADDER WITH SAFETY CAGE AND LADDER EXTENSION FOR ACCESS FROM GRADE. THE PLATFORM AND LADDER SHALL CONSIST OF:

   ACCESS PLATFORM STAINLESS STEEL – 9C5845M3
   ACCESS LADDER ALUMINUM – 9C5899MA
   ACCESS LADDER MOUNTING BRACKETS STAINLESS STEEL – 9C6060M3
   SAFETY CAGE GALV STEEL WITH BALTIBOND POLYMER COATING – 9C5914MG

   ALL PARTS SHIP LOOSE FOR FIELD ASSEMBLY AND INSTALLATION. INSTRUCTIONS WILL BE PROVIDED.
7. ELECTRONIC ISOLATION VALVES ARE OWNER PROVIDED, CONTRACTOR INSTALLED, TYPICAL.
8. CT-5&6 SHALL BE MOUNTED SO THE FULL LEVEL OF THE COLD WATER BASIN MATCHES THE FULL LEVEL OF CT 1-4. ADJUST HEIGHT OF COOLING TOWER SUPPORTS ACCORDINGLY.
9. INSTALL 6"ø FLOOR SINK AND CONNECT 6" WASTE INTO (E) 6" SANITARY SEWER LINE.

NOTES:

1. FOR COMPLETE VALVES AND FITTINGS, SEE CHILLED AND CONDENSING WATER FLOW DIAGRAM ON SHEET M4.8.

NO.	DATE	REVISIONS
4	07/17/12	RE-ISSUE FOR PLAN CHECK

REGISTERED PROFESSIONAL ENGINEER JAN P. BLACK No. 028813 Exp. 6/30/14 MECHANICAL STATE OF CALIFORNIA

PETERS engineering
2411 Alhambra Blvd, Ste. 100
Sacramento, CA 95817
Tel (916) 447-2841
www.peterseng.com
Job no. 10.063
consulting mechanical and electrical engineers

SMUD
SACRAMENTO MUNICIPAL UTILITY DISTRICT

DESIGNED:	JB
DRAWN:	JM
APPROVED:	
DATE:	JULY 17, 2012
SCALE:	1/8"=1'-0"

MICROGRID PROJECT

OVERALL CENTRAL PLANT MECHANICAL GENERAL ARRANGEMENT

JOB NO.

SHEET NO. M-2.2

OF SHEETS

\10.063\dwgs\M-2.2.dwg, 7/17/2012 9:00:35 AM, jmathews, 1:1

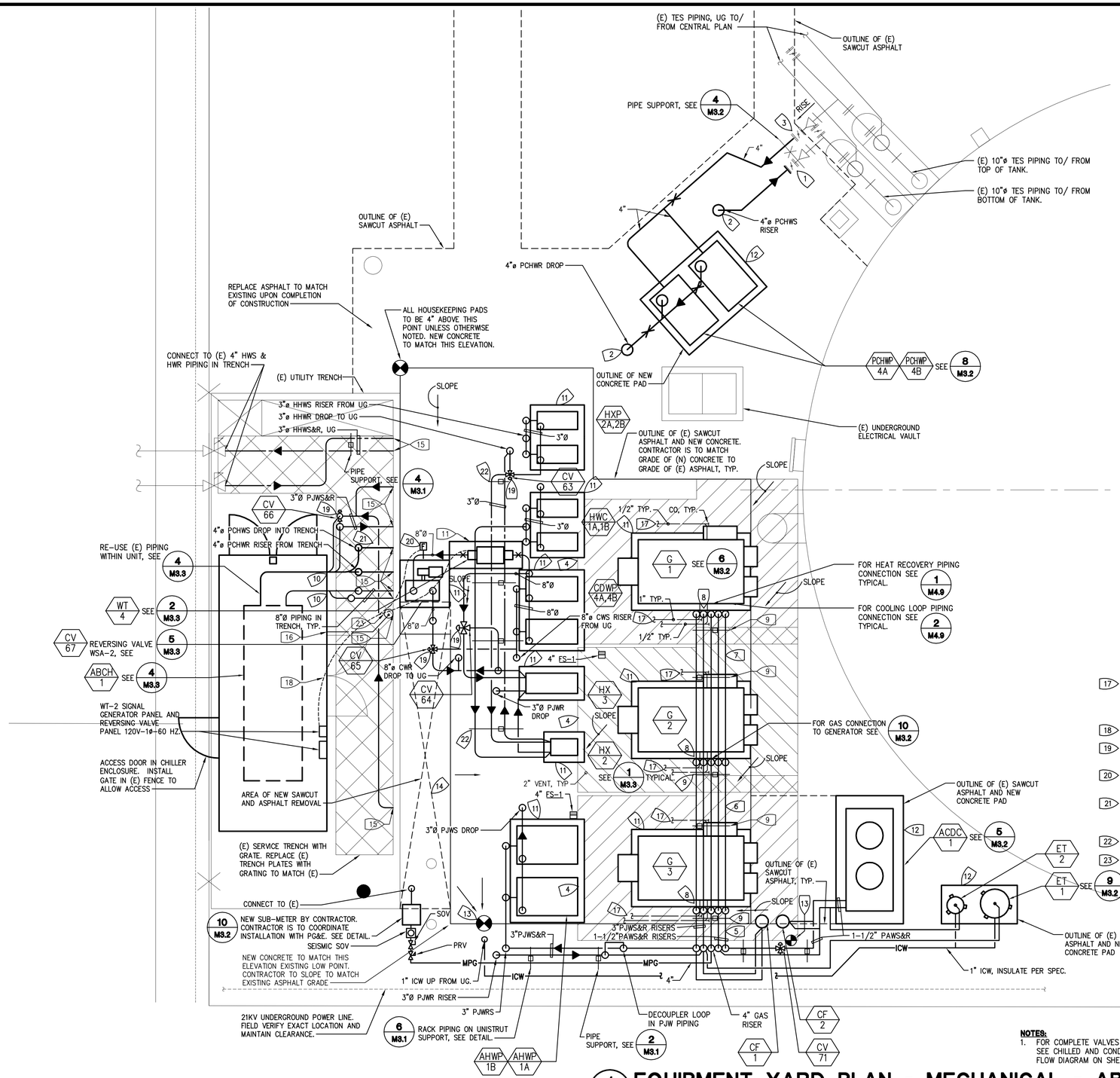

1 M-2.3 EQUIPMENT YARD PLAN - MECHANICAL - ABOVE GROUND

SCALE: 1/4"=1'-0"

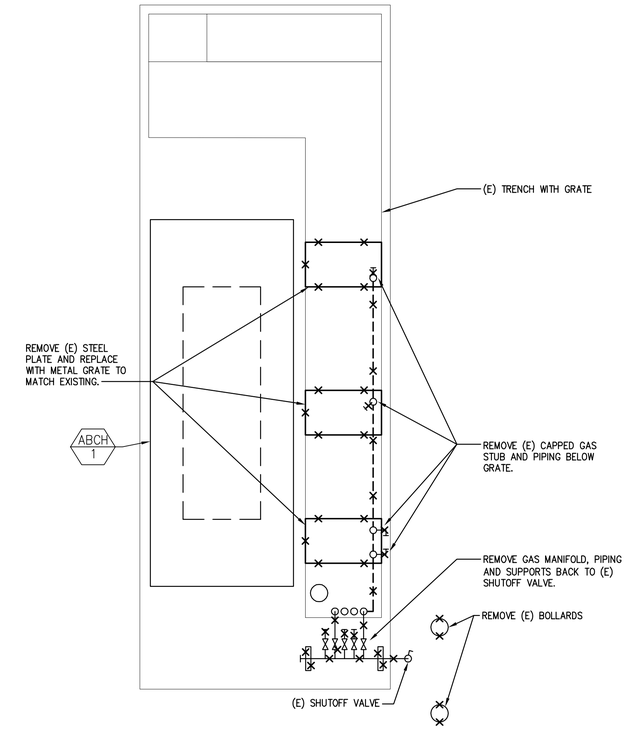

2 M-2.3 GAS PIPING DEMOLITION PLAN

SCALE: 1/4"=1'-0"

KEYED SHEET NOTES:

1. CONNECT NEW PCHWS TO (E) BRANCH LINE.
2. 4" PIPE DROP TO UNDERGROUND.
3. CONNECT NEW PCHWR TO (E) BRANCH LINE.
4. MAINTAIN 36" MINIMUM CLEARANCE FOR ACCESS ALL AROUND GENERATORS AND 42" CODE CLEARANCE AT ELECTRICAL PANEL.
5. 1" PAWS&R, 2" PJWS&R, 3" GAS PIPING ON PIPE SUPPORT.
6. 3/4" PAWS&R, 1-1/2" PJWS&R, 2-1/2" GAS PIPING ON PIPE SUPPORT
7. 3/4"ø PAWS&R, 1-1/2"ø PJWS&R AND 2"ø GAS PIPING ON PIPE SUPPORT.
8. 3/4" PAWS&R AND 1-1/2" PJWS&R PIPE DROPS OFF BOTTOM OF MAIN. OFFSET AND DROP TO CLEAR ALL ACCESS DOORS AND ACCESS PANELS ON GENERATOR. MAINTAIN 42" CLEARANCE AT ELECTRICAL PANEL.
9. PIPE SUPPORT. LOCATE TO CLEAR ALL ACCESS DOORS AND ACCESS PANELS ON GENERATOR. SEE 4/M3.2
10. INSTALL ECCENTRIC PIPE INCREASER/DECREASER IN PCHWS&R, PJWS&R AND CHWS&R PIPING OUTSIDE OF CHILLER ENCLOSURE AND CONNECT TO FULL SIZE PIPING AT ENCLOSURE PENETRATION.
11. CONCRETE HOUSEKEEPING PAD 6" BEYOND UNIT MINIMUM OF 4" ABOVE ADJACENT CONCRETE FOR ALL UNITS. ALL PADS TO BE SAME ELEVATION, EXCEPT FOR ACDC AND ET PADS. SEE 10/S5.1
12. CONCRETE HOUSEKEEPING PADS TO BE 4" ABOVE EXISTING ASPHALT MINIMUM, SEE 10/S5.1
13. LOW POINT IN (E) ASPHALT. CONTRACTOR SHALL SLOPE (N) CONCRETE TO MATCH.
14. REMOVE ADDITIONAL ASPHALT AND REPLACE WITH CONCRETE.
15. PIPING IN TRENCH, FOR CONTINUATION SEE 1/M2.4.
16. CONNECT FULL SIZE DRAIN LINE TO CHILLER AND ROUTE TO TERMINATE OVER FUNNEL DRAIN WITH 1" AIR GAP. SUPPORT ON AND SECURE TO "DURABLOCK" PIPE SUPPORT. SLOPE AT 1/8" PER FOOT MINIMUM.
17. ROUTE DRAIN LINES TO TERMINATE OVER FLOOR SINK WITH 1" AIR GAP. SUPPORT ON AND SECURE TO "DURABLOCK" PIPE SUPPORT. SLOPE AT 1/8" PER FOOT MINIMUM. SLOPE AT 1/8" PER FOOT.
18. INTERLOCK CONTROL WIRING PROVIDED BY OWNER.
19. CONTROL VALVE PROVIDED BY OWNER AND INSTALLED BY CONTRACTOR.
20. FLOW SWITCH PROVIDED BY OWNER AND INSTALLED BY CONTRACTOR. SEE 1/M4.1 FOR LOCATION.
21. CONTRACTOR TO PROVIDE A 2'-6" WIDE CLEAR AREA FOR ACCESS TO ABCH-1. NO PIPING SHALL OBSTRUCT CLEAR ACCESS.
22. SUPPORT PIPING AT 36" ABOVE FINISHED GRADE PER 4/M3.2.
23. INSTALL J.R. SMITH FIGURE 3812C, FUNNEL DRAIN, 8"Ø INLET, 4"Ø OUTLET. INSTALL BELOW GRADE

NOTES:

1. FOR COMPLETE VALVES AND FITTINGS, SEE CHILLED AND CONDENSING WATER FLOW DIAGRAM ON SHEET M4.8 AND M4.9.

NO.	DATE	REVISIONS
4	07/17/12	RE-ISSUE FOR PLAN CHECK

REGISTERED PROFESSIONAL ENGINEER JAN P. BLACK No. 028813 Exp. 6/30/14 MECHANICAL STATE OF CALIFORNIA

PETERS engineering
2411 Alhambra Blvd, Ste. 100
Sacramento, CA 95817
Tel (916) 447-2841
www.peterseng.com
Job no. 10.063
consulting mechanical and electrical engineers

SMUD
SACRAMENTO MUNICIPAL UTILITY DISTRICT

DESIGNED:	JB
DRAWN:	JM
APPROVED:	
DATE:	JULY 17, 2012
SCALE:	1/4"=1'-0"

MICROGRID PROJECT

OVERALL CENTRAL PLANT MECHANICAL GENERAL ARRANGEMENT

JOB NO.

SHEET NO. M-2.3

OF SHEETS

\10.063\dfwgs\M2.4 EQUIPMENT YARD UNDERGROUND.dwg, 7/17/2012 9:00:37 AM, jmatthews, 1:1

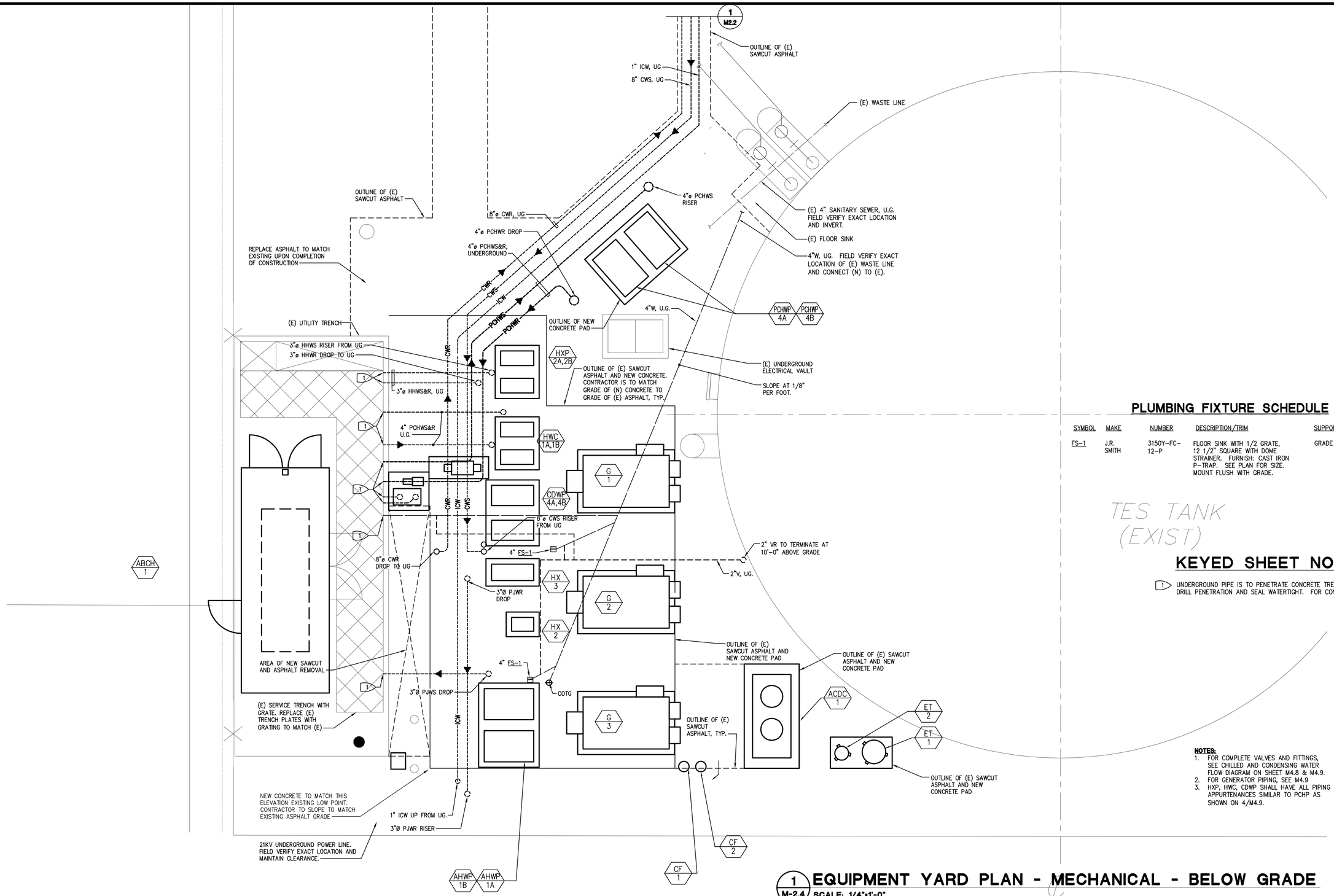

PLUMBING FIXTURE SCHEDULE

SYMBOL	MAKE	NUMBER	DESCRIPTION/TRIM	SUPPORT	MATERIAL
FS-1	J.R. SMITH	3150Y-FC-12-P	FLOOR SINK WITH 1/2 GRATE, 12 1/2" SQUARE WITH DOME STRAINER. FURNISH: CAST IRON P-TRAP. SEE PLAN FOR SIZE. MOUNT FLUSH WITH GRADE.	GRADE	CAST IRON

KEYED SHEET NOTES:

1. UNDERGROUND PIPE IS TO PENETRATE CONCRETE TRENCH WALL. CORE DRILL PENETRATION AND SEAL WATERTIGHT. FOR CONTINUATION, SEE 1/M2.3

NOTES:

1. FOR COMPLETE VALVES AND FITTINGS, SEE CHILLED AND CONDENSING WATER FLOW DIAGRAM ON SHEET M4.8 & M4.9.
2. FOR GENERATOR PIPING, SEE M4.9
3. HXP, HWC, CDWP SHALL HAVE ALL PIPING APPURTENANCES SIMILAR TO PCHP AS SHOWN ON 4/M4.9.

1/M-2.4 EQUIPMENT YARD PLAN - MECHANICAL - BELOW GRADE

SCALE: 1/4"=1'-0"

NO.	DATE	REVISIONS
4	07/17/12	RE-ISSUE FOR PLAN CHECK

REGISTERED PROFESSIONAL ENGINEER JAN P. BLACK No. 028813 Exp. 6/30/14 MECHANICAL STATE OF CALIFORNIA

PETERS engineering
2411 Alhambra Blvd, Ste. 100
Sacramento, CA 95817
Tel (916) 447-2841
www.peterseng.com
Job no. 10.063
consulting mechanical and electrical engineers

SMUD
SACRAMENTO MUNICIPAL UTILITY DISTRICT

DESIGNED:	JB
DRAWN:	JM
APPROVED:	
DATE:	JULY 17, 2012
SCALE:	1/4"=1'-0"

MICROGRID PROJECT

OVERALL CENTRAL PLANT MECHANICAL GENERAL ARRANGEMENT

JOB NO.

SHEET NO. M-2.4 OF SHEETS

\10.063\dwgs\M2.4 EQUIPMENT YARD UNDERGROUND.dwg, 7/17/2012 9:00:38 AM, jmatthews, 1:1

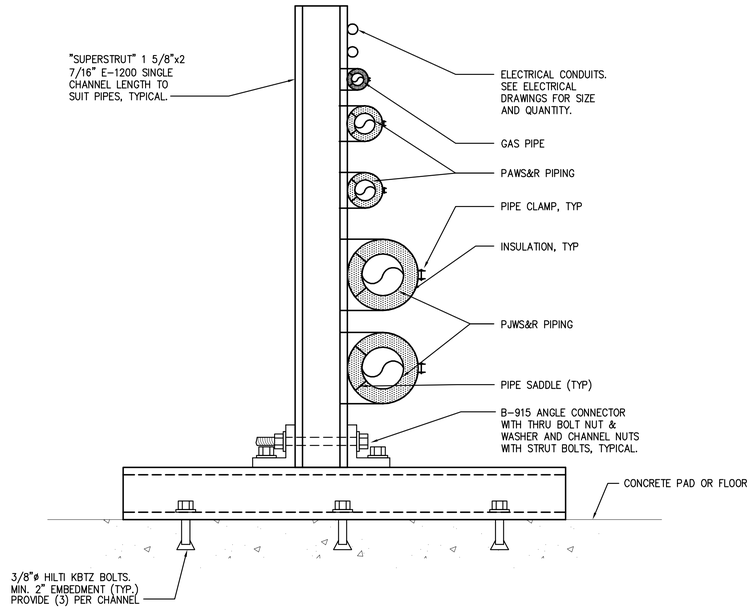

6 M3.1 RACKED PIPE MOUNTING
NO SCALE

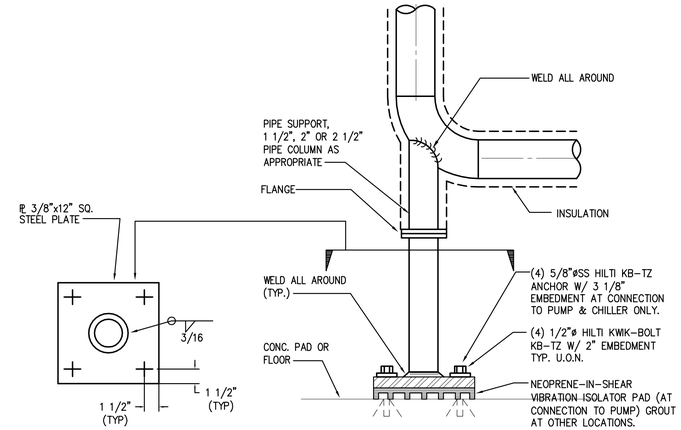

PUMP SUPPORT SIMILAR

3 M3.1 PIPE SUPPORT
NO SCALE

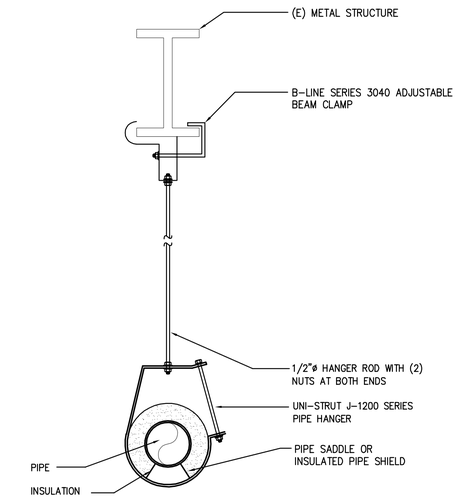

NOTE: PIPE SPACING PER SPECIFICATIONS

1 M3.1 PIPE HANGER DETAIL
NO SCALE

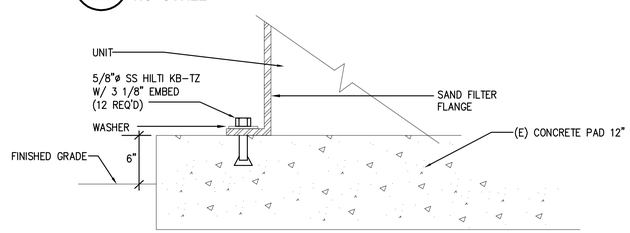

7 M3.1 SAND FILTER SUPPORT
NO SCALE

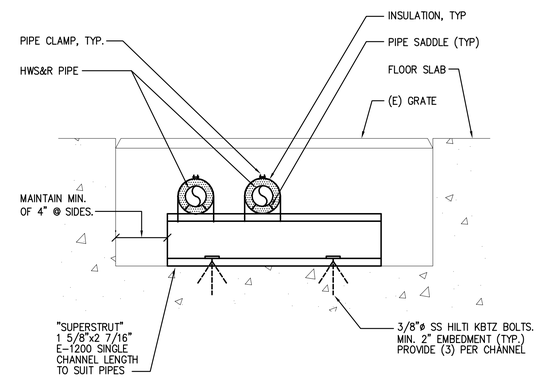

NOTES:
1. CHANNELS INSTALLED BETWEEN ANCHORED LOCATIONS SHALL ONLY BE SET IN A BED OF MASTIC AND NOT BOLTED TO THE FLOOR.

4 M3.1 PIPING TRENCH / PIPE MOUNTING
NO SCALE

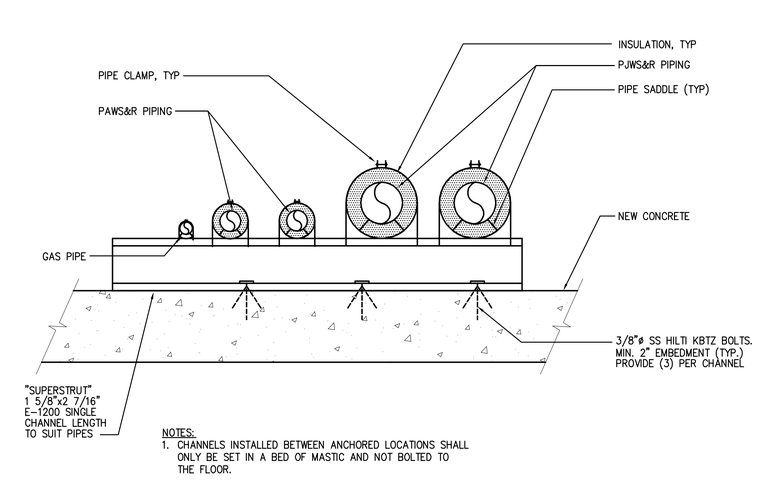

NOTES:
1. CHANNELS INSTALLED BETWEEN ANCHORED LOCATIONS SHALL ONLY BE SET IN A BED OF MASTIC AND NOT BOLTED TO THE FLOOR.

2 M3.1 PIPE MOUNTING
NO SCALE

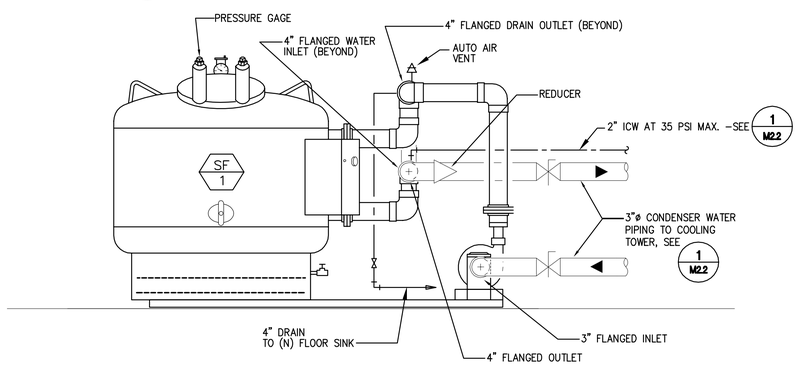

8 M3.1 SAND FILTER PIPING DIAGRAM
NO SCALE

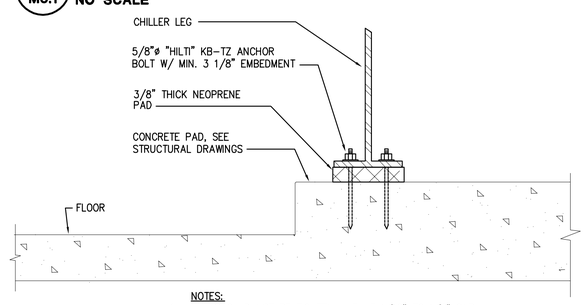

NOTES:
1. NUT SHOULD NOT BE TIGHTEN . LEAVE 1/16" TO 1/8" GAP.
2. TYPICAL FOR 4 @ EACH CORNER OF CHILLER (16 TOTAL). CONTRACTOR SHALL DRILL 3/4"ø HOLES IN CHILLER LEG.

5 M3.1 CHILLER SUPPORT DETAIL
NO SCALE

NO.	DATE	REVISIONS
4	07/17/12	RE-ISSUE FOR PLAN CHECK

REGISTERED PROFESSIONAL ENGINEER JAN P. BLACK No. 028813 Exp. 6/30/14 MECHANICAL STATE OF CALIFORNIA

PETERS engineering
2411 Alhambra Blvd, Ste. 100
Sacramento, CA 95817
Tel (916) 447-2841
www.peterseng.com
Job no. 10.063
consulting mechanical and electrical engineers

SMUD
SACRAMENTO MUNICIPAL UTILITY DISTRICT

DESIGNED: JB	MICROGRID PROJECT	JOB NO.
DRAWN: JM	DETAILS	SHEET NO. M-3.1
APPROVED:		OF SHEETS
DATE: JULY 17, 2012		
SCALE: AS NOTED		

\10.063\dfwgs\M-3.1.dwg, 7/17/2012 9:00:39 AM, jmatthews, 1:1

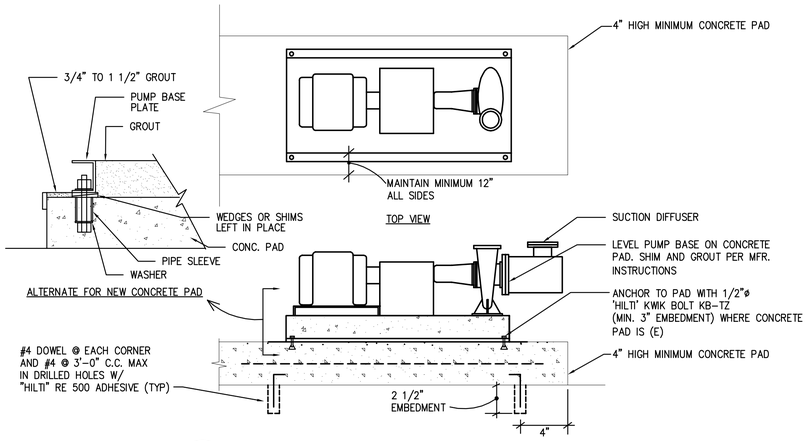

8 M3.2 PUMP MOUNTING DETAIL
NO SCALE

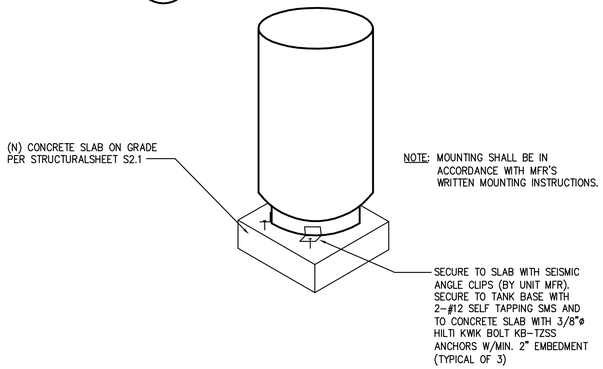

9 M3.2 EXPANSION TANK DETAIL
NO SCALE

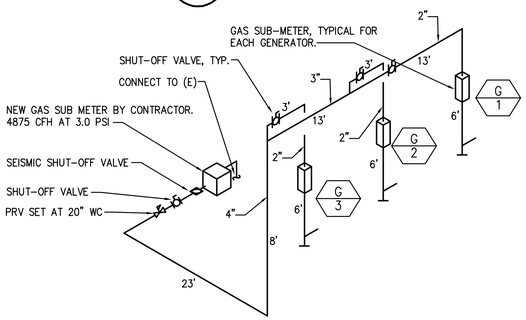

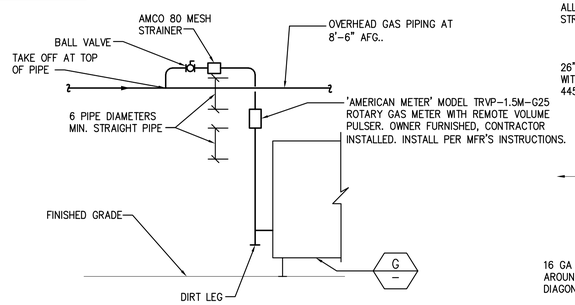

SUB-METER INSTALLATION

GENERATOR #1	1625 CFH
GENERATOR #2	1625 CFH
GENERATOR #3	1625 CFH
TOTAL	4875 CFH

LONGEST RUN IS 65 FEET

NOTES:
1. GAS PIPING SIZED IN ACCORDANCE WITH 2010 CPC, CHAPTER 12, TABLE 12-8.
2. CONNECT EACH APPLIANCE WITH SOC, UNION AND 6" LONG DIRT LEG.

10 M3.2 GAS PIPING ISOMETRIC
NO SCALE

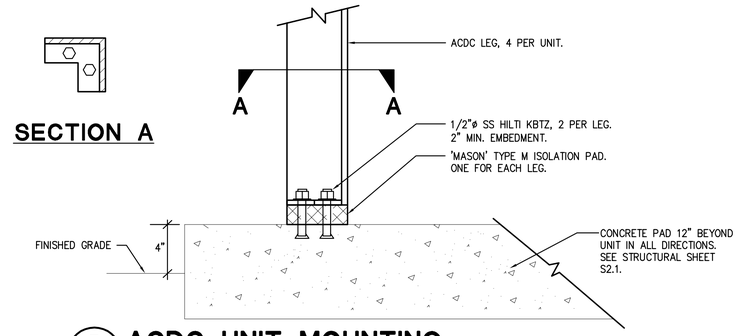

5 M3.2 ACDC UNIT MOUNTING
NO SCALE

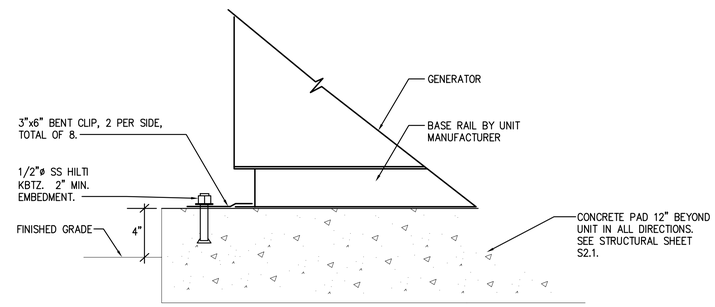

6 M3.2 GENERATOR UNIT MOUNTING
NO SCALE

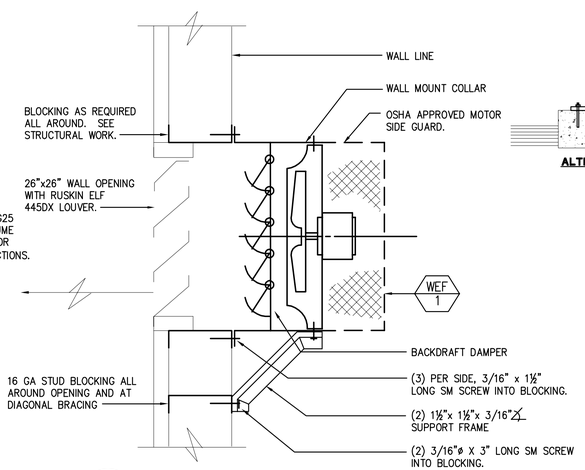

7 M3.2 WALL EXHAUST FAN
NO SCALE

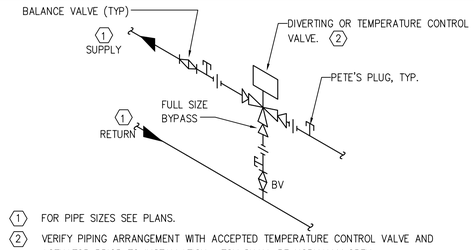

1. FOR PIPE SIZES SEE PLANS.
2. VERIFY PIPING ARRANGEMENT WITH ACCEPTED TEMPERATURE CONTROL VALVE AND ACTUATOR PRIOR TO INSTALLATION. TCV SHALL BE NORMALLY OPEN.
3. VERIFY ACTUAL INLET & OUTLET PIPING CONNECTION LOCATION.
4. INSTALL UNION FOR 2" & SMALLER. INSTALL FLANGES FOR OVER 2".

1 M3.2 3-WAY VALVE PIPING
NO SCALE

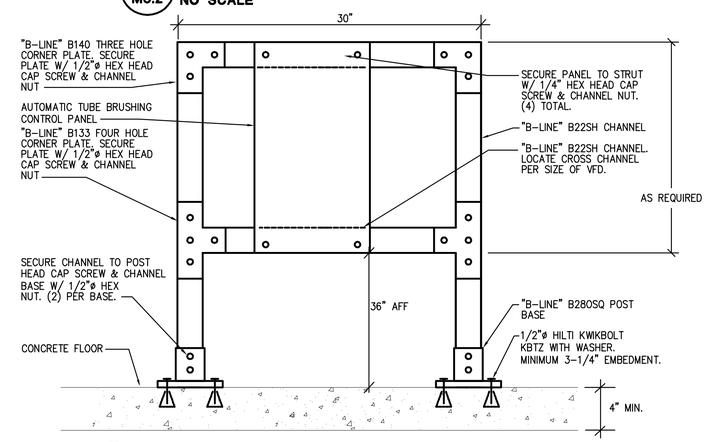

2 M3.2 UNISTRUT SUPPORT MOUNTING DETAIL
NO SCALE

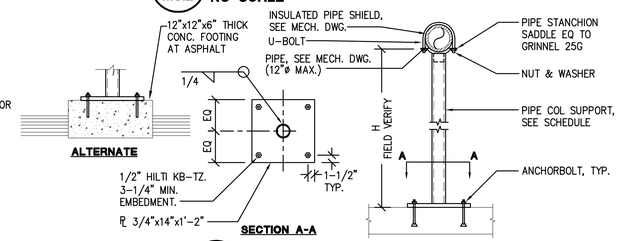

PIPE ø	H
3" STD	8' MAX.
4" STD	15' MAX.

NOTE:
1. MAX SUPPORT SPACING SHALL NOT EXCEED 10'-0" OC.
2. PROVIDE SS ANCHORS @ EXTERIOR CONDITIONS.

3 M3.2 SINGLE PIPE SUPPORT DETAIL
NO SCALE

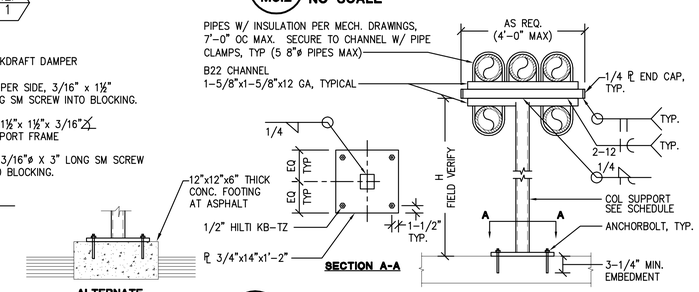

HSS	H
3x3x3/16"	8' MAX.
4x4x3/16"	15' MAX.

NOTE:
1. MAX SUPPORT SPACING SHALL NOT EXCEED 10'-0" OC.
2. PROVIDE SS ANCHORS @ EXTERIOR CONDITIONS.

4 M3.2 MULTIPLE PIPE SUPPORT DETAIL
NO SCALE

NO.	DATE	REVISIONS
4	07/17/12	RE-ISSUE FOR PLAN CHECK

REGISTERED PROFESSIONAL ENGINEER JAN P. BLACK No. 028813 Exp. 6/30/14 MECHANICAL STATE OF CALIFORNIA

PETERS engineering
2411 Alhambra Blvd, Ste. 100
Sacramento, CA 95817
Tel (916) 447-2841
www.peterseng.com
Job no. 10.063
consulting mechanical and electrical engineers

SMUD
SACRAMENTO MUNICIPAL UTILITY DISTRICT

DESIGNED:	JB
DRAWN:	JM
APPROVED:	
DATE:	JULY 17, 2012
SCALE:	AS NOTED

MICROGRID PROJECT

DETAILS

JOB NO.

SHEET NO. M-3.2 OF SHEETS

\10.063\dwgs\M-3.2.dwg, 7/17/2012 9:00:41 AM, jmathews, 1:1

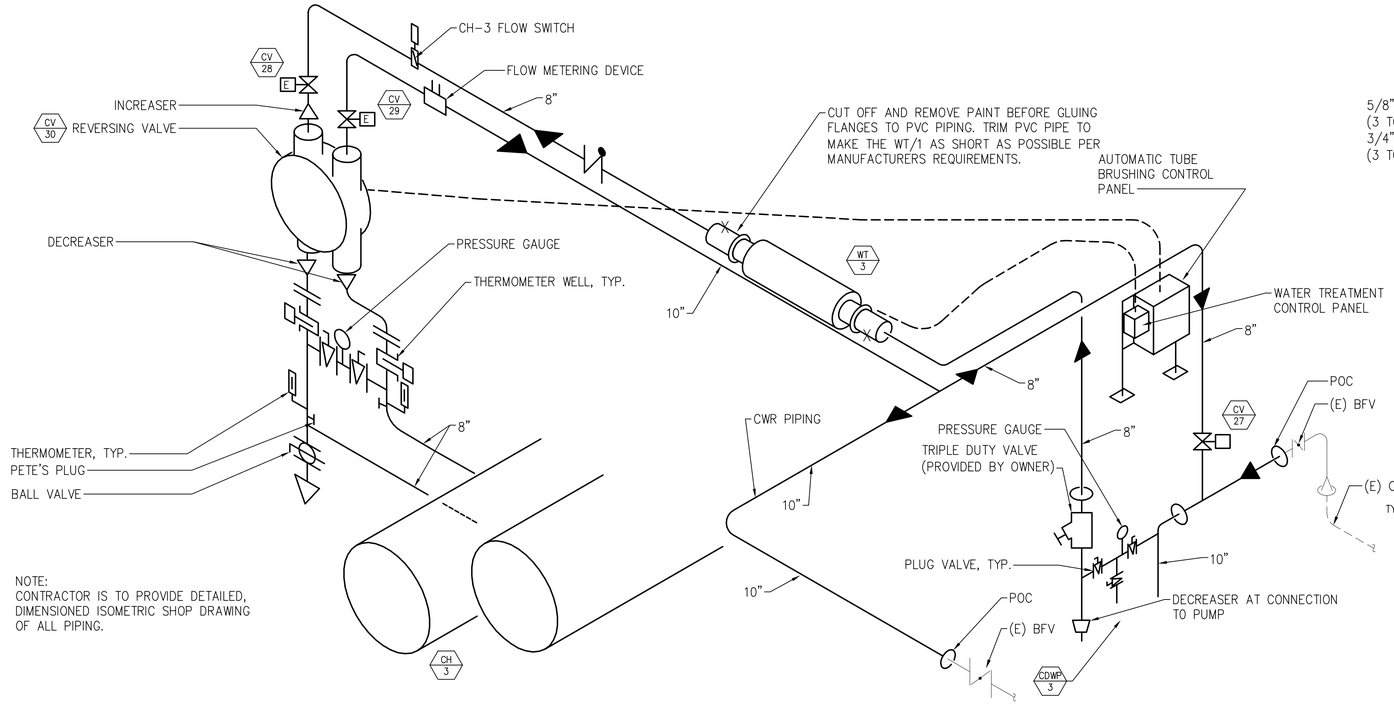

NOTE:
CONTRACTOR IS TO PROVIDE DETAILED, DIMENSIONED ISOMETRIC SHOP DRAWING OF ALL PIPING.

3 M-3.3 CONDENSER WATER PIPING
SCALE: NONE

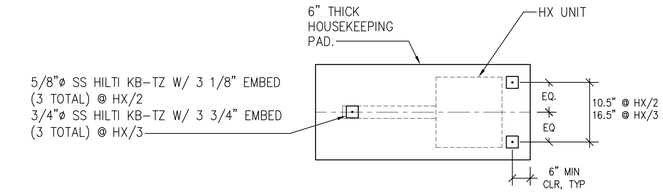

1 M-3.3 HEAT EXCHANGER MOUNTING DETAIL
SCALE: NONE

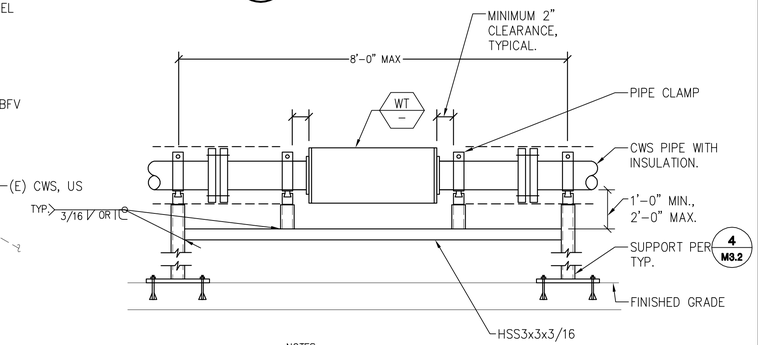

NOTES:
1. SUPPORT UNIT AT BOTH ENDS. INDEPENDENT OF PIPE SUPPORTS.
2. PROVIDE WITH WEATHERPROOF ALUMINUM JACKET FOR WT-4 ONLY.

2 M-3.3 WT-3 AND 4 SUPPORT
SCALE: NONE

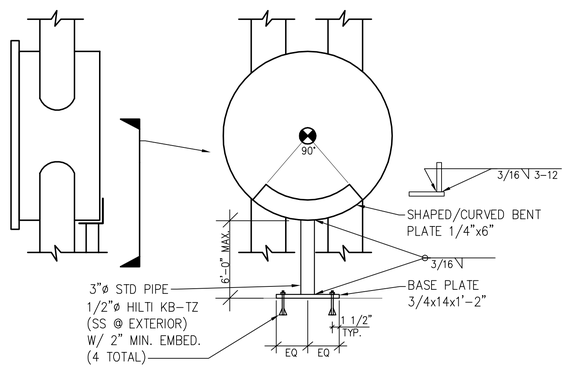

5 M-3.3 REVERSING VALVE SUPPORT
SCALE: NONE

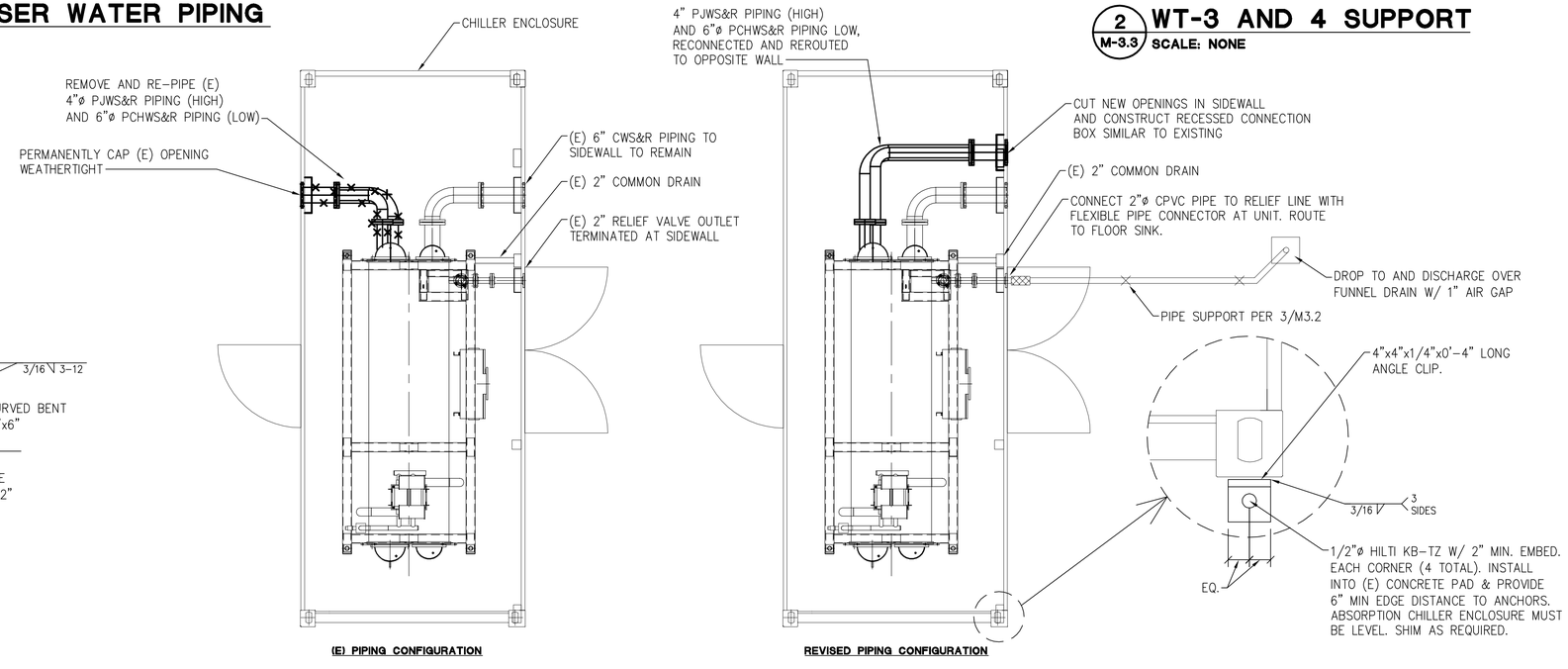

4 M-3.3 CHILLER PIPING CONFIGURATION
SCALE: NONE

NO.	DATE	REVISIONS
4	07/17/12	RE-ISSUE FOR PLAN CHECK

REGISTERED PROFESSIONAL ENGINEER JAN P. BLACK No. 028813 Exp. 6/30/14 MECHANICAL STATE OF CALIFORNIA

PETERS engineering
2411 Alhambra Blvd, Ste. 100
Sacramento, CA 95817
Tel (916) 447-2841
www.peterseng.com
Job no. 10.063
consulting mechanical and electrical engineers

SMUD
SACRAMENTO MUNICIPAL UTILITY DISTRICT

DESIGNED:	JB
DRAWN:	JM
APPROVED:	
DATE:	JULY 17, 2012
SCALE:	AS NOTED

MICROGRID PROJECT

DETAILS

JOB NO.

SHEET NO. M-3.3

OF SHEETS

\10.063\drwgs\M-3.3 DETAILS.dwg, 7/17/2012 9:00:42 AM, jmatthews, 1:1

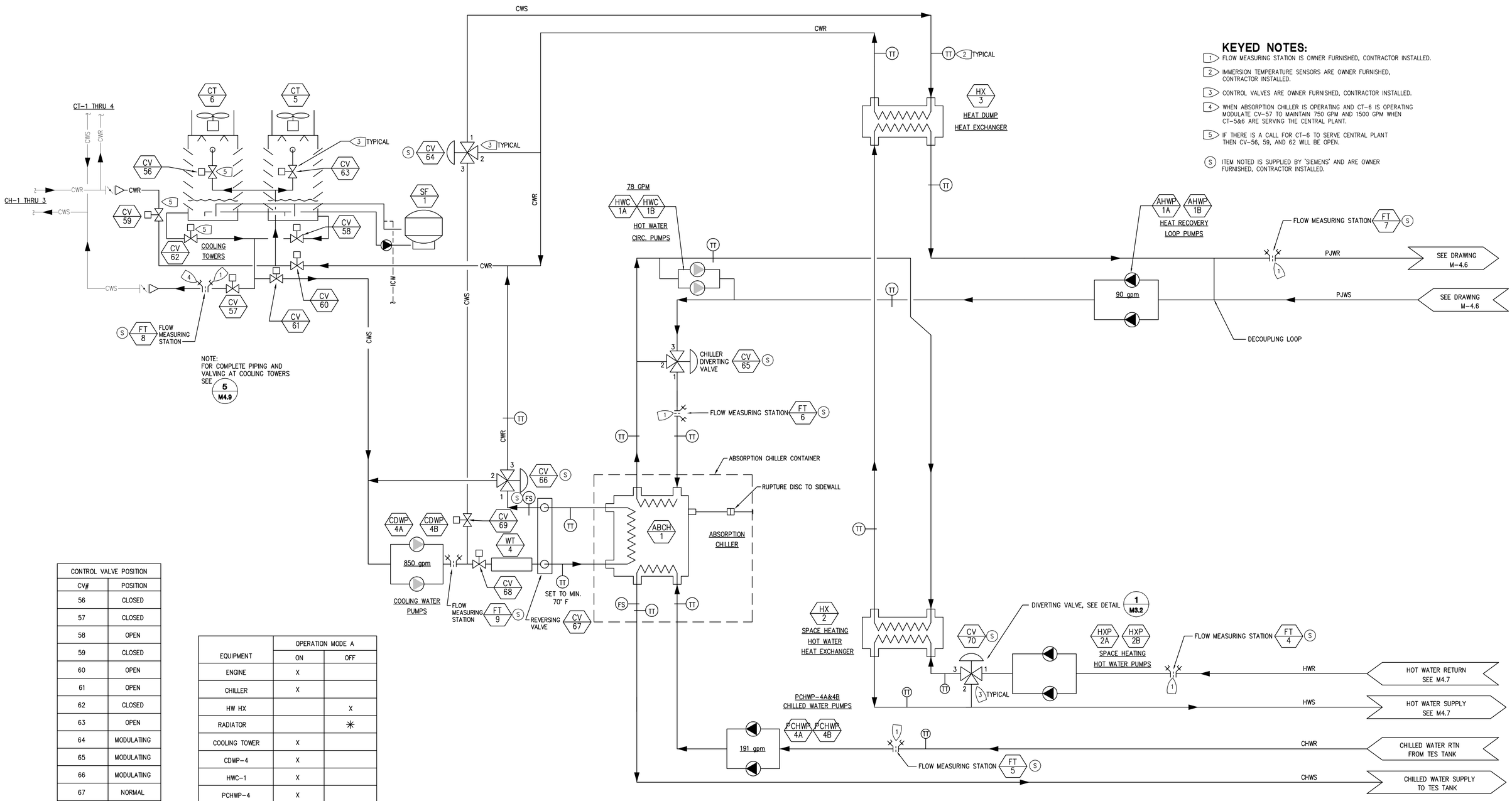

KEYED NOTES:

1. FLOW MEASURING STATION IS OWNER FURNISHED, CONTRACTOR INSTALLED.
2. IMMERSION TEMPERATURE SENSORS ARE OWNER FURNISHED, CONTRACTOR INSTALLED.
3. CONTROL VALVES ARE OWNER FURNISHED, CONTRACTOR INSTALLED.
4. WHEN ABSORPTION CHILLER IS OPERATING AND CT-6 IS OPERATING MODULATE CV-57 TO MAINTAIN 750 GPM AND 1500 GPM WHEN CT-5&6 ARE SERVING THE CENTRAL PLANT.
5. IF THERE IS A CALL FOR CT-6 TO SERVE CENTRAL PLANT THEN CV-56, 59, AND 62 WILL BE OPEN.

(S) ITEM NOTED IS SUPPLIED BY 'SIEMENS' AND ARE OWNER FURNISHED, CONTRACTOR INSTALLED.

CONTROL VALVE POSITION	
CV#	POSITION
56	CLOSED
57	CLOSED
58	OPEN
59	CLOSED
60	OPEN
61	OPEN
62	CLOSED
63	OPEN
64	MODULATING
65	MODULATING
66	MODULATING
67	NORMAL
68	OPEN
69	OPEN
70	1 CLOSED

EQUIPMENT	OPERATION MODE A	
	ON	OFF
ENGINE	X	
CHILLER	X	
HW HX		X
RADIATOR		✳
COOLING TOWER	X	
CDWP-4	X	
HWC-1	X	
PCHWP-4	X	
HXP-2		X

✳ INTERMITTENT

OPERATION MODE A-CHILLER "ON" ((3) TECOGEN GENERATORS "ON")

NO.	DATE	REVISIONS
4	07/17/12	RE-ISSUE FOR PLAN CHECK

REGISTERED PROFESSIONAL ENGINEER JAN P. BLACK No. 028813 Exp. 6/30/14 MECHANICAL STATE OF CALIFORNIA

PETERS engineering
2411 Alhambra Blvd, Ste. 100
Sacramento, CA 95817
Tel (916) 447-2841
www.peterseng.com
Job no. 10.063
consulting mechanical and electrical engineers

SMUD
SACRAMENTO MUNICIPAL UTILITY DISTRICT

DESIGNED: JB
DRAWN: JM
APPROVED:
DATE: JULY 17, 2012
SCALE: AS NOTED

MICROGRID PROJECT

PROPOSED COGENERATION PROCESS FLOW DIAGRAM AND INSTRUMENTATION

JOB NO.
SHEET NO. M-4.1
OF SHEETS

\10.063\dwgs\M-4.1.dwg, 7/17/2012 9:00:44 AM, jmatthews, 1:1

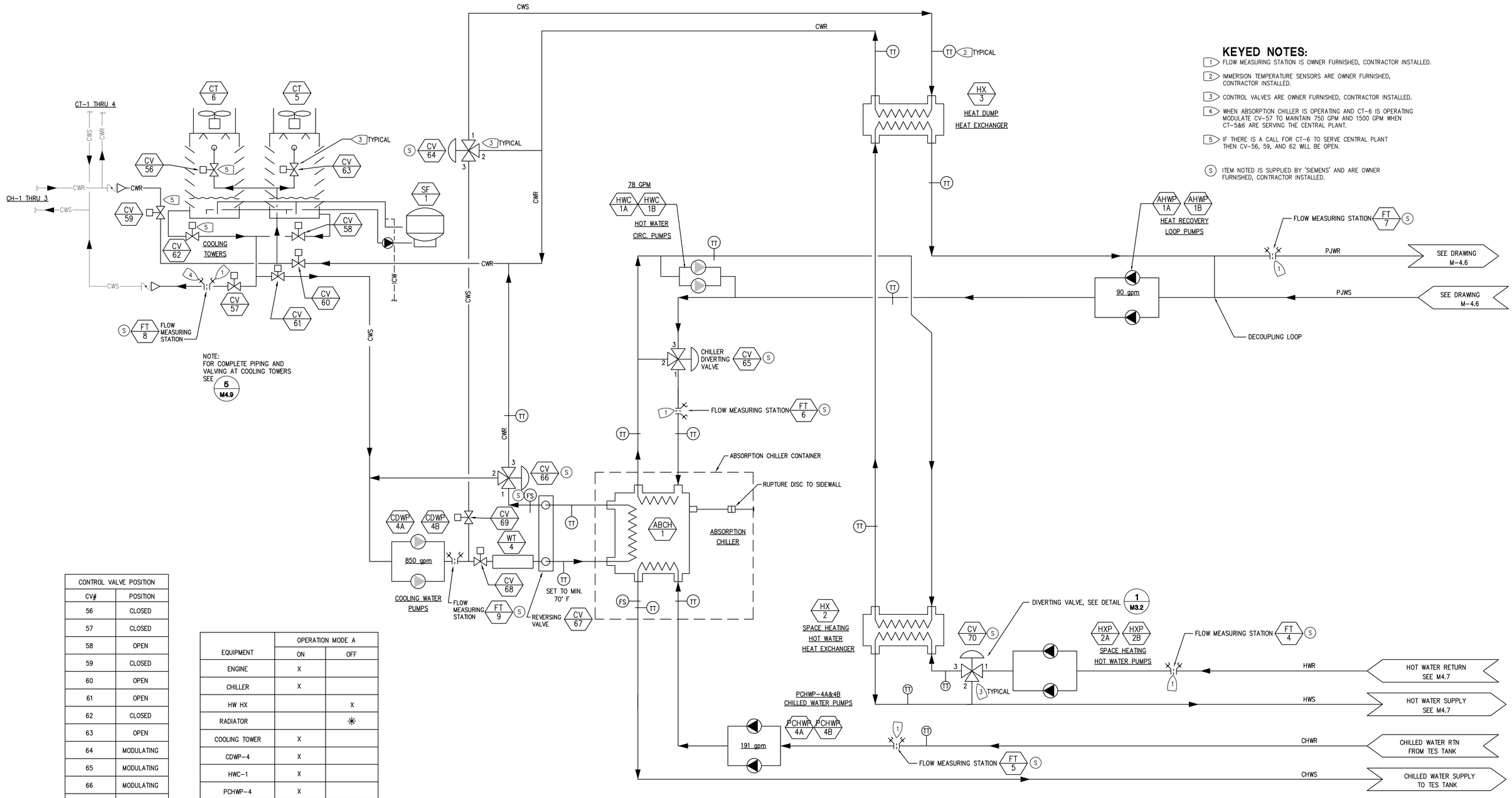

KEYED NOTES:

1. FLOW MEASURING STATION IS OWNER FURNISHED, CONTRACTOR INSTALLED.
2. IMMERSION TEMPERATURE SENSORS ARE OWNER FURNISHED, CONTRACTOR INSTALLED.
3. CONTROL VALVES ARE OWNER FURNISHED, CONTRACTOR INSTALLED.
4. WHEN ABSORPTION CHILLER IS OPERATING AND CT-6 IS OPERATING MODULATE CV-57 TO MAINTAIN 750 GPM AND 1500 GPM WHEN CT-5&6 ARE SERVING THE CENTRAL PLANT.
5. IF THERE IS A CALL FOR CT-6 TO SERVE CENTRAL PLANT THEN CV-56, 59, AND 62 WILL BE OPEN.

(S) ITEM NOTED IS SUPPLIED BY "SIEMENS" AND ARE OWNER FURNISHED, CONTRACTOR INSTALLED.

CONTROL VALVE POSITION	
CV#	POSITION
56	CLOSED
57	CLOSED
58	OPEN
59	CLOSED
60	OPEN
61	OPEN
62	CLOSED
63	OPEN
64	MODULATING
65	MODULATING
66	MODULATING
67	NORMAL
68	OPEN
69	OPEN
70	1 CLOSED

EQUIPMENT	OPERATION MODE A	
	ON	OFF
ENGINE	X	
CHILLER	X	
HW HX		X
RADIATOR		✳
COOLING TOWER	X	
CDWP-4	X	
HWC-1	X	
PCHWP-4	X	
HXP-2		X

✳ INTERMITTENT

OPERATION MODE B-CHILLER "ON" ((2) TECOGEN GENERATORS "ON")

NO.	DATE	REVISIONS
4	07/17/12	RE-ISSUE FOR PLAN CHECK

REGISTERED PROFESSIONAL ENGINEER JAN P. BLACK No. 028813 Exp. 6/30/14 MECHANICAL STATE OF CALIFORNIA

PETERS engineering
2411 Alhambra Blvd, Ste. 100
Sacramento, CA 95817
Tel (916) 447-2841
www.peterseng.com
Job no. 10.063
consulting mechanical and electrical engineers

SMUD
SACRAMENTO MUNICIPAL UTILITY DISTRICT

DESIGNED: JB
DRAWN: JM
APPROVED:
DATE: JULY 17, 2012
SCALE: AS NOTED

MICROGRID PROJECT

PROPOSED COGENERATION PROCESS FLOW DIAGRAM AND INSTRUMENTATION

JOB NO.
SHEET NO. M-4.2
OF SHEETS

\10.063\dwgs\M-4.2.dwg, 7/17/2012 9:00:45 AM, jmatthews, 1:1

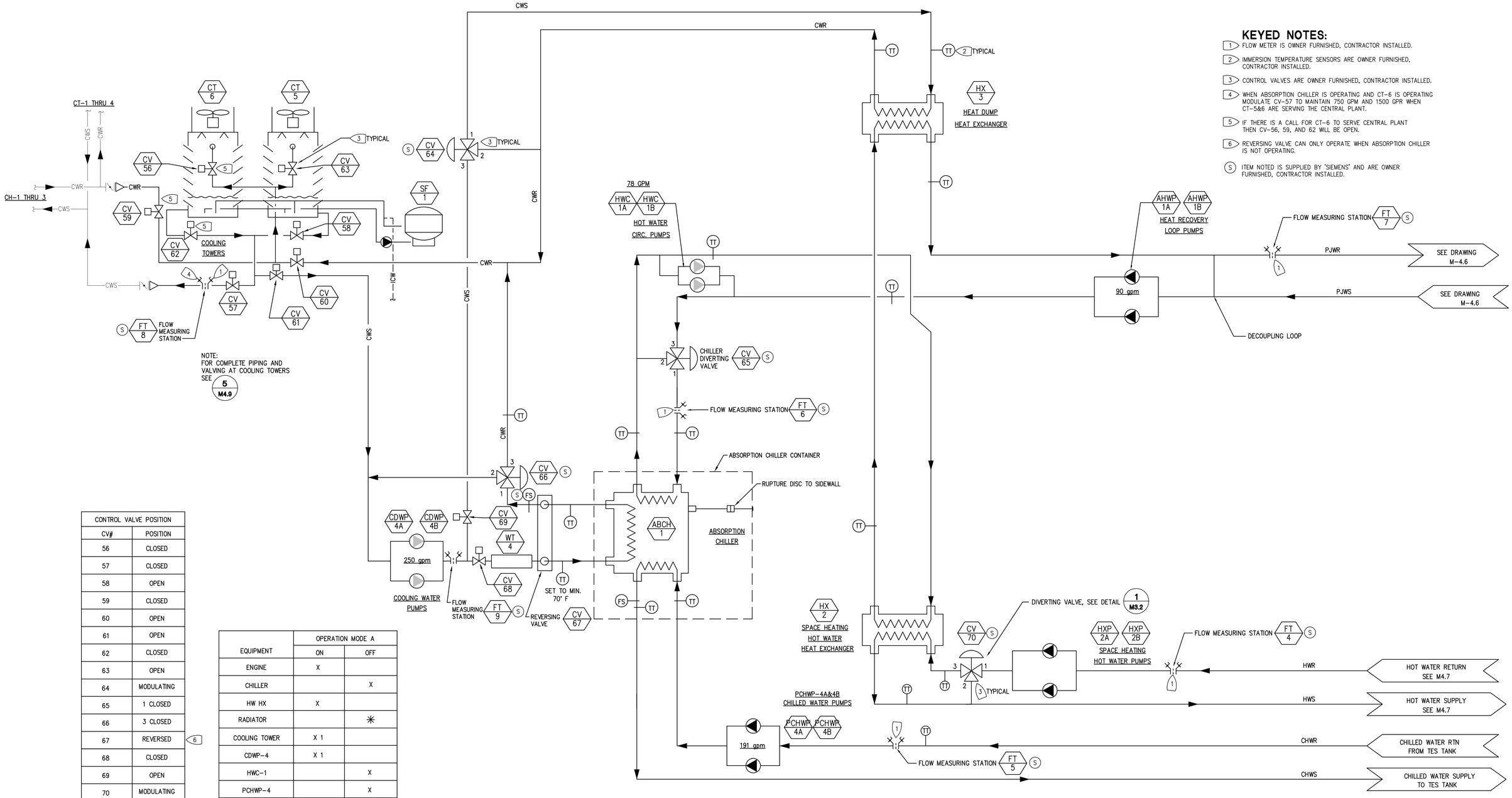

KEYED NOTES:

1. FLOW METER IS OWNER FURNISHED, CONTRACTOR INSTALLED.
2. IMMERSION TEMPERATURE SENSORS ARE OWNER FURNISHED, CONTRACTOR INSTALLED.
3. CONTROL VALVES ARE OWNER FURNISHED, CONTRACTOR INSTALLED.
4. WHEN ABSORPTION CHILLER IS OPERATING AND CT-6 IS OPERATING MODULATE CV-57 TO MAINTAIN 750 GPM AND 1500 GPR WHEN CT-5&6 ARE SERVING THE CENTRAL PLANT.
5. IF THERE IS A CALL FOR CT-6 TO SERVE CENTRAL PLANT THEN CV-56, 59, AND 62 WILL BE OPEN.
6. REVERSING VALVE CAN ONLY OPERATE WHEN ABSORPTION CHILLER IS NOT OPERATING.

(S) ITEM NOTED IS SUPPLIED BY 'SIEMENS' AND ARE OWNER FURNISHED, CONTRACTOR INSTALLED.

CONTROL VALVE POSITION	
CV#	POSITION
56	CLOSED
57	CLOSED
58	OPEN
59	CLOSED
60	OPEN
61	OPEN
62	CLOSED
63	OPEN
64	MODULATING
65	1 CLOSED
66	3 CLOSED
67	REVERSED (6)
68	CLOSED
69	OPEN
70	MODULATING

EQUIPMENT	OPERATION MODE A	
	ON	OFF
ENGINE	X	
CHILLER		X
HW HX	X	
RADIATOR		✳
COOLING TOWER	X 1	
CDWP-4	X 1	
HWC-1		X
PCHWP-4		X
HXP-2	X	

✳ INTERMITTENT

1. COOLING TOWER ON IF PJWS EXCEEDS GENERATOR MAXIMUM SUPPLY TEMPERATURE.

OPERATION MODE C-CHILLER "OFF" ((3) TECOGEN GENERATORS "ON")(HX "ON")

NO.	DATE	REVISIONS
4	07/17/12	RE-ISSUE FOR PLAN CHECK

REGISTERED PROFESSIONAL ENGINEER JAN P. BLACK No. 028813 Exp. 6/30/14 MECHANICAL STATE OF CALIFORNIA

PETERS engineering
2411 Alhambra Blvd, Ste. 100
Sacramento, CA 95817
Tel (916) 447-2841
www.peterseng.com
Job no. 10.063
consulting mechanical and electrical engineers

SMUD
SACRAMENTO MUNICIPAL UTILITY DISTRICT

DESIGNED:	JB
DRAWN:	JM
APPROVED:	
DATE:	JULY 17, 2012
SCALE:	AS NOTED

MICROGRID PROJECT

PROPOSED COGENERATION PROCESS FLOW DIAGRAM AND INSTRUMENTATION

JOB NO.

SHEET NO. M-4.3 OF SHEETS

\10.063\dwgs\M-4.3.dwg, 7/17/2012 9:00:47 AM, jmatthews, 1:1

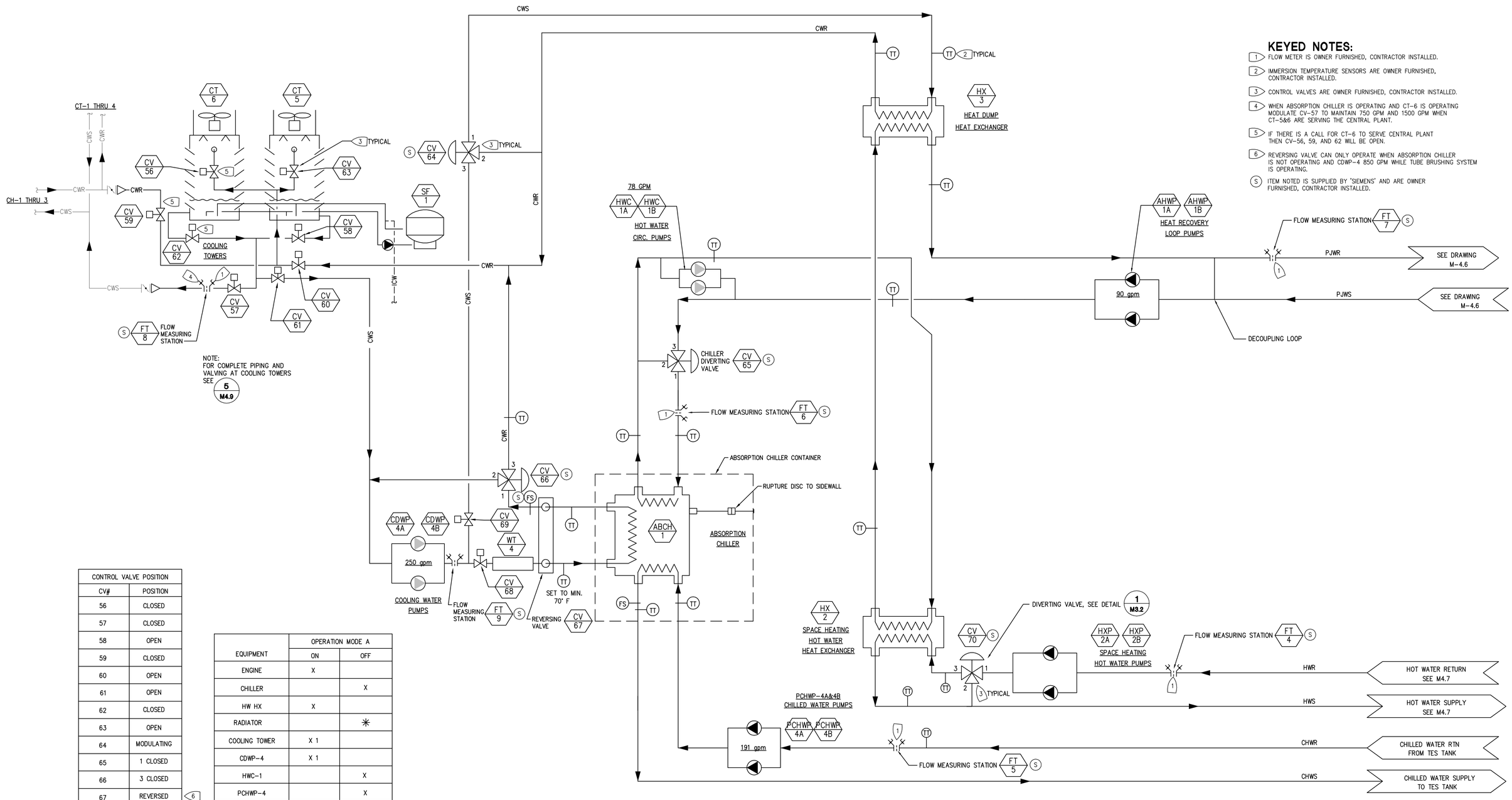

KEYED NOTES:

1. FLOW METER IS OWNER FURNISHED, CONTRACTOR INSTALLED.
2. IMMERSION TEMPERATURE SENSORS ARE OWNER FURNISHED, CONTRACTOR INSTALLED.
3. CONTROL VALVES ARE OWNER FURNISHED, CONTRACTOR INSTALLED.
4. WHEN ABSORPTION CHILLER IS OPERATING AND CT-6 IS OPERATING MODULATE CV-57 TO MAINTAIN 750 GPM AND 1500 GPM WHEN CT-5&6 ARE SERVING THE CENTRAL PLANT.
5. IF THERE IS A CALL FOR CT-6 TO SERVE CENTRAL PLANT THEN CV-56, 59, AND 62 WILL BE OPEN.
6. REVERSING VALVE CAN ONLY OPERATE WHEN ABSORPTION CHILLER IS NOT OPERATING AND CDWP-4 850 GPM WHILE TUBE BRUSHING SYSTEM IS OPERATING.

(S) ITEM NOTED IS SUPPLIED BY 'SIEMENS' AND ARE OWNER FURNISHED, CONTRACTOR INSTALLED.

CONTROL VALVE POSITION		
CV#	POSITION	
56	CLOSED	
57	CLOSED	
58	OPEN	
59	CLOSED	
60	OPEN	
61	OPEN	
62	CLOSED	
63	OPEN	
64	MODULATING	
65	1 CLOSED	
66	3 CLOSED	
67	REVERSED	6
68	CLOSED	
69	OPEN	
70	MODULATING	

EQUIPMENT	OPERATION MODE A	
	ON	OFF
ENGINE	X	
CHILLER		X
HW HX	X	
RADIATOR		✳
COOLING TOWER	X 1	
CDWP-4	X 1	
HWC-1		X
PCHWP-4		X
HXP-2	X	

✳ INTERMITTENT

1. COOLING TOWER ON IF PJWS EXCEEDS GENERATOR MAXIMUM SUPPLY TEMPERATURE.

OPERATION MODE D-CHILLER "OFF" ((2) TECOGEN GENERATORS "ON")(HX "ON")

NO.	DATE	REVISIONS
4	07/17/12	RE-ISSUE FOR PLAN CHECK

REGISTERED PROFESSIONAL ENGINEER JAN P. BLACK No. 028813 Exp. 6/30/14 MECHANICAL STATE OF CALIFORNIA

PETERS engineering
2411 Alhambra Blvd, Ste. 100
Sacramento, CA 95817
Tel (916) 447-2841
www.peterseng.com
Job no. 10.063
consulting mechanical and electrical engineers

SMUD
SACRAMENTO MUNICIPAL UTILITY DISTRICT

DESIGNED:	JB
DRAWN:	JM
APPROVED:	
DATE:	JULY 17, 2012
SCALE:	AS NOTED

MICROGRID PROJECT

PROPOSED COGENERATION PROCESS FLOW DIAGRAM AND INSTRUMENTATION

JOB NO.

SHEET NO. M-4.4 OF SHEETS

\10.063\dwgs\M-4.4.dwg, 7/17/2012 9:00:48 AM, jmatthews, 1:1

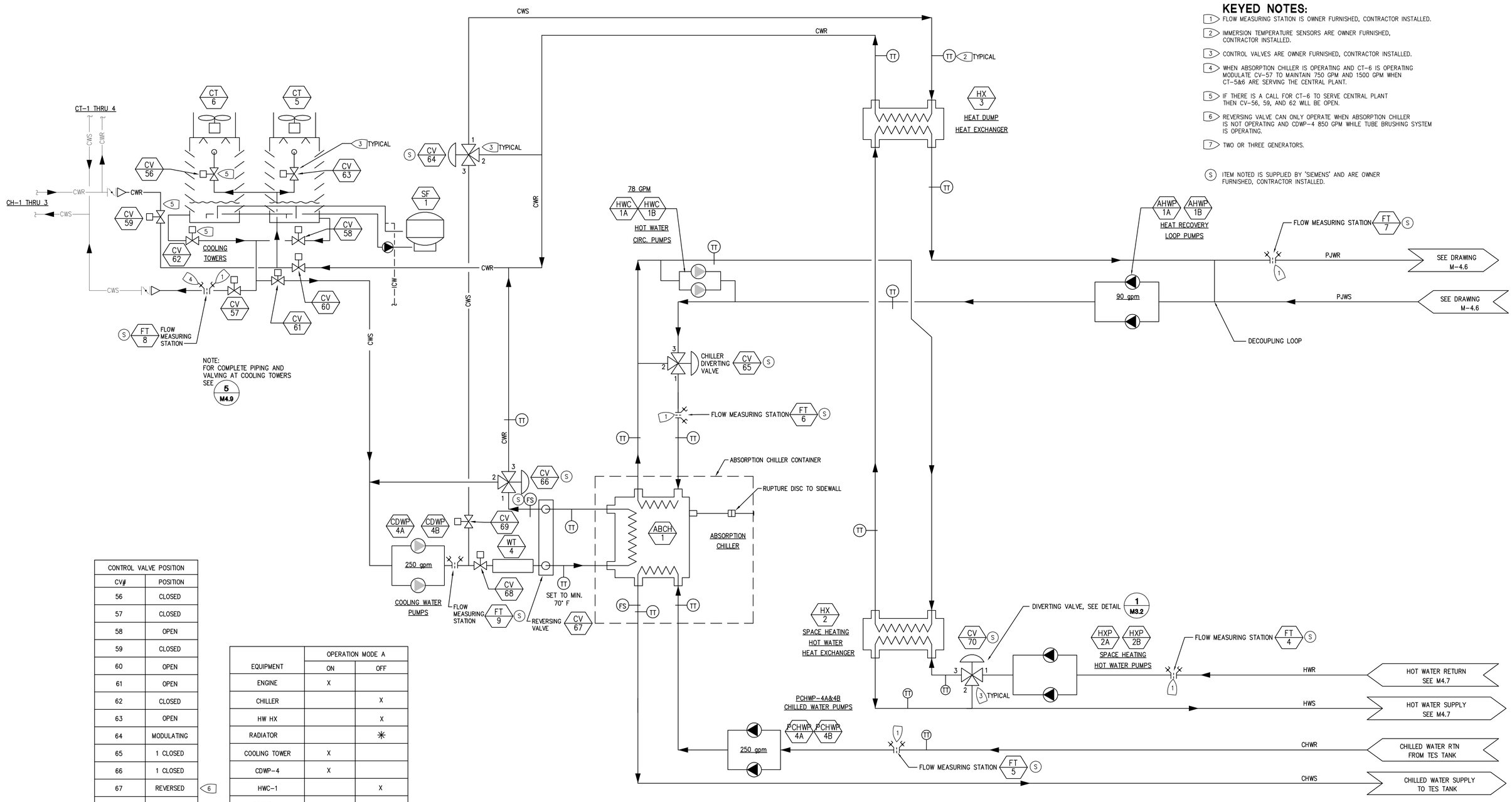

KEYED NOTES:

1. FLOW MEASURING STATION IS OWNER FURNISHED, CONTRACTOR INSTALLED.
2. IMMERSION TEMPERATURE SENSORS ARE OWNER FURNISHED, CONTRACTOR INSTALLED.
3. CONTROL VALVES ARE OWNER FURNISHED, CONTRACTOR INSTALLED.
4. WHEN ABSORPTION CHILLER IS OPERATING AND CT-6 IS OPERATING MODULATE CV-57 TO MAINTAIN 750 GPM AND 1500 GPM WHEN CT-5&6 ARE SERVING THE CENTRAL PLANT.
5. IF THERE IS A CALL FOR CT-6 TO SERVE CENTRAL PLANT THEN CV-56, 59, AND 62 WILL BE OPEN.
6. REVERSING VALVE CAN ONLY OPERATE WHEN ABSORPTION CHILLER IS NOT OPERATING AND CDWP-4 850 GPM WHILE TUBE BRUSHING SYSTEM IS OPERATING.
7. TWO OR THREE GENERATORS.

(S) ITEM NOTED IS SUPPLIED BY "SIEMENS" AND ARE OWNER FURNISHED, CONTRACTOR INSTALLED.

CONTROL VALVE POSITION	
CV#	POSITION
56	CLOSED
57	CLOSED
58	OPEN
59	CLOSED
60	OPEN
61	OPEN
62	CLOSED
63	OPEN
64	MODULATING
65	1 CLOSED
66	1 CLOSED
67	REVERSED (6)
68	CLOSED
69	OPEN
70	1 CLOSED

EQUIPMENT	OPERATION MODE A	
	ON	OFF
ENGINE	X	
CHILLER		X
HW HX		X
RADIATOR		✳
COOLING TOWER	X	
CDWP-4	X	
HWC-1		X
PCHWP-4		X
HXP-2		X

✳ INTERMITTENT

OPERATION MODE E-CHILLER "OFF" ((3) TECOGEN GENERATORS "ON")("DUMP MODE") (7)

NO.	DATE	REVISIONS
4	07/17/12	RE-ISSUE FOR PLAN CHECK

REGISTERED PROFESSIONAL ENGINEER JAN P. BLACK No. 028813 Exp. 6/30/14 MECHANICAL STATE OF CALIFORNIA

PETERS engineering
2411 Alhambra Blvd, Ste. 100
Sacramento, CA 95817
Tel (916) 447-2841
www.peterseng.com
Job no. 10.063
consulting mechanical and electrical engineers

SMUD
SACRAMENTO MUNICIPAL UTILITY DISTRICT

DESIGNED:	JB
DRAWN:	JM
APPROVED:	
DATE:	JULY 17, 2012
SCALE:	AS NOTED

MICROGRID PROJECT

PROPOSED COGENERATION PROCESS FLOW DIAGRAM AND INSTRUMENTATION

JOB NO.

SHEET NO. M-4.5 OF SHEETS

\10.063\dwgs\M-4.5.dwg, 7/17/2012 9:00:49 AM, jmatthews, 1:1

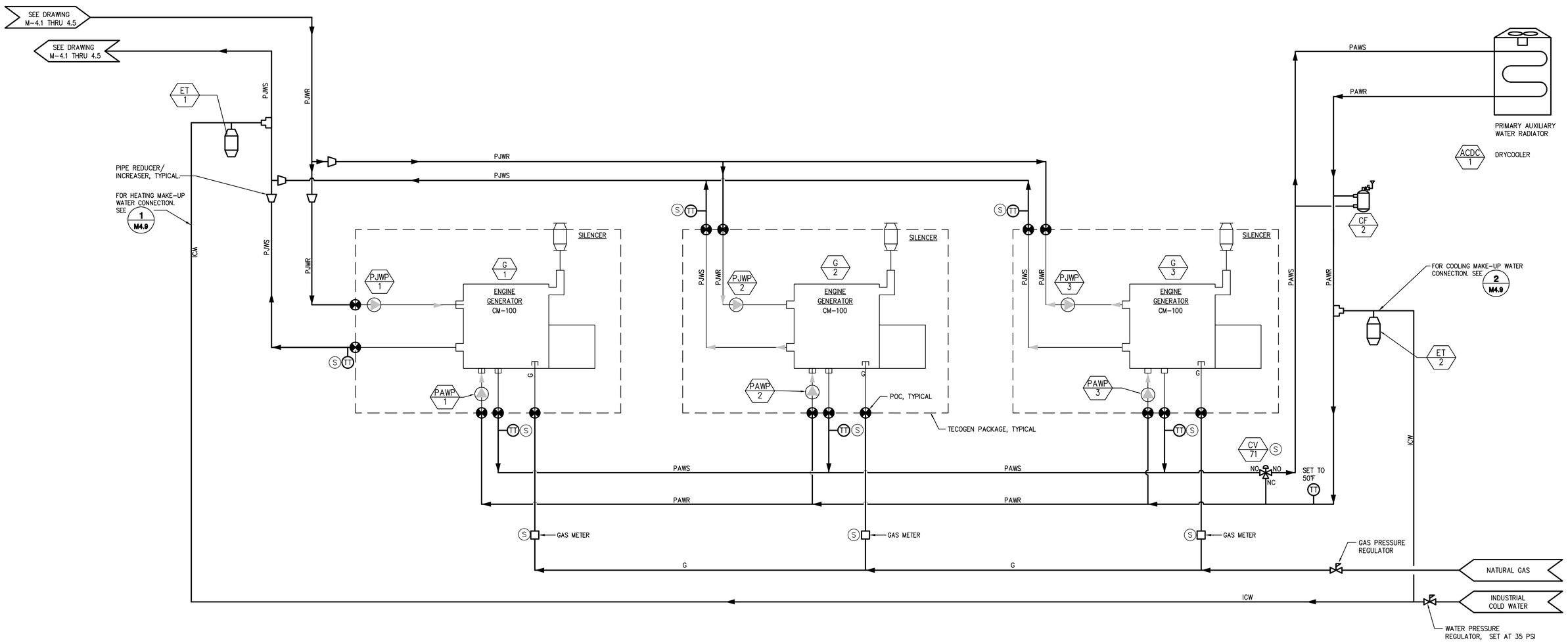

NOTE:

(S) ITEM NOTED IS SUPPLIED BY 'SIEMENS'. REFER TO SHEETS M5.1 THRU M5.3.

OPERATION MODE A-CHILLER "ON"

SEE 1/M4.9 AND 2/M4.9 FOR PIPING DETAILS

NO.	DATE	REVISIONS
4	07/17/12	RE-ISSUE FOR PLAN CHECK

REGISTERED PROFESSIONAL ENGINEER JAN P. BLACK No. 028813 Exp. 6/30/14 MECHANICAL STATE OF CALIFORNIA

PETERS engineering
2411 Alhambra Blvd, Ste. 100
Sacramento, CA 95817
Tel (916) 447-2841
www.peterseng.com
Job no. 10.063
consulting mechanical and electrical engineers

SMUD
SACRAMENTO MUNICIPAL UTILITY DISTRICT

DESIGNED:	JB
DRAWN:	JM
APPROVED:	
DATE:	JULY 17, 2012
SCALE:	NTS

MICROGRID PROJECT

COGENERATION PROCESS FLOW DIAGRAM AND INSTRUMENTATION

JOB NO.

SHEET NO. M-4.6 OF SHEETS

\10.063\dwgs\M4.6 COGENERATION PROCESS FLOW DIAGRAM.dwg, 7/17/2012 9:00:50 AM, jmathews, 1:1

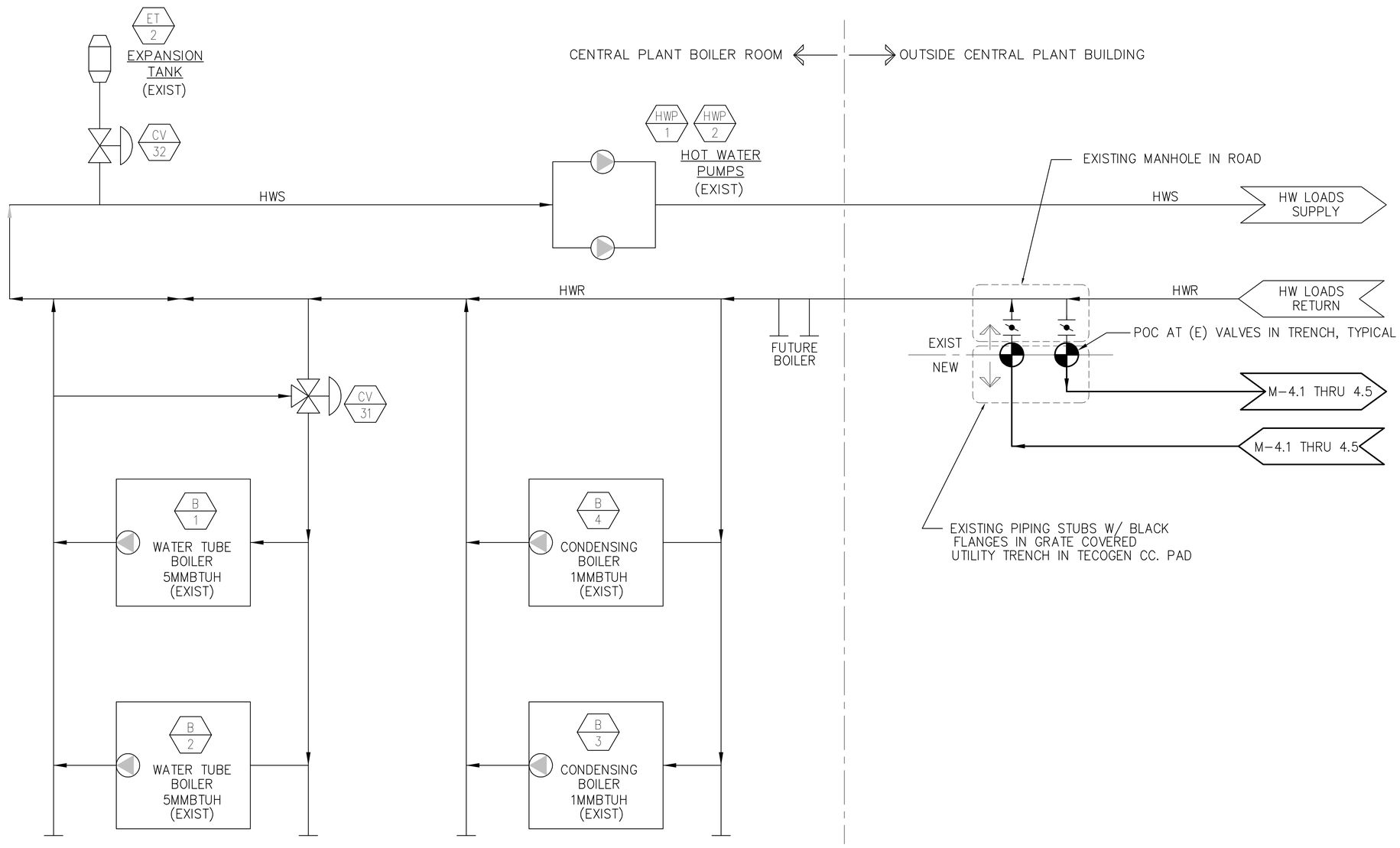

NO.	DATE	REVISIONS
4	07/17/12	RE-ISSUE FOR PLAN CHECK

REGISTERED PROFESSIONAL ENGINEER JAN P. BLACK No. 028813 Exp. 6/30/14 MECHANICAL STATE OF CALIFORNIA

PETERS engineering
2411 Alhambra Blvd, Ste. 100
Sacramento, CA 95817
Tel (916) 447-2841
www.peterseng.com
Job no. 10.063
consulting mechanical and electrical engineers

SMUD
SACRAMENTO MUNICIPAL UTILITY DISTRICT

DESIGNED: JB
DRAWN: JM
APPROVED:
DATE: JULY 17, 2012
SCALE: NTS

MICROGRID PROJECT

SPACE HEATING HOT WATER SYSTEM PROCESS FLOW DIAGRAM AND INSTRUMENTATION

JOB NO.

SHEET NO. **M-4.7**

OF SHEETS

\10.063\dwgs\M4.7 SPACE HEATING HW PROCESS DIAGRAM.dwg, 7/17/2012 9:00:53 AM, jmathews, 1:1

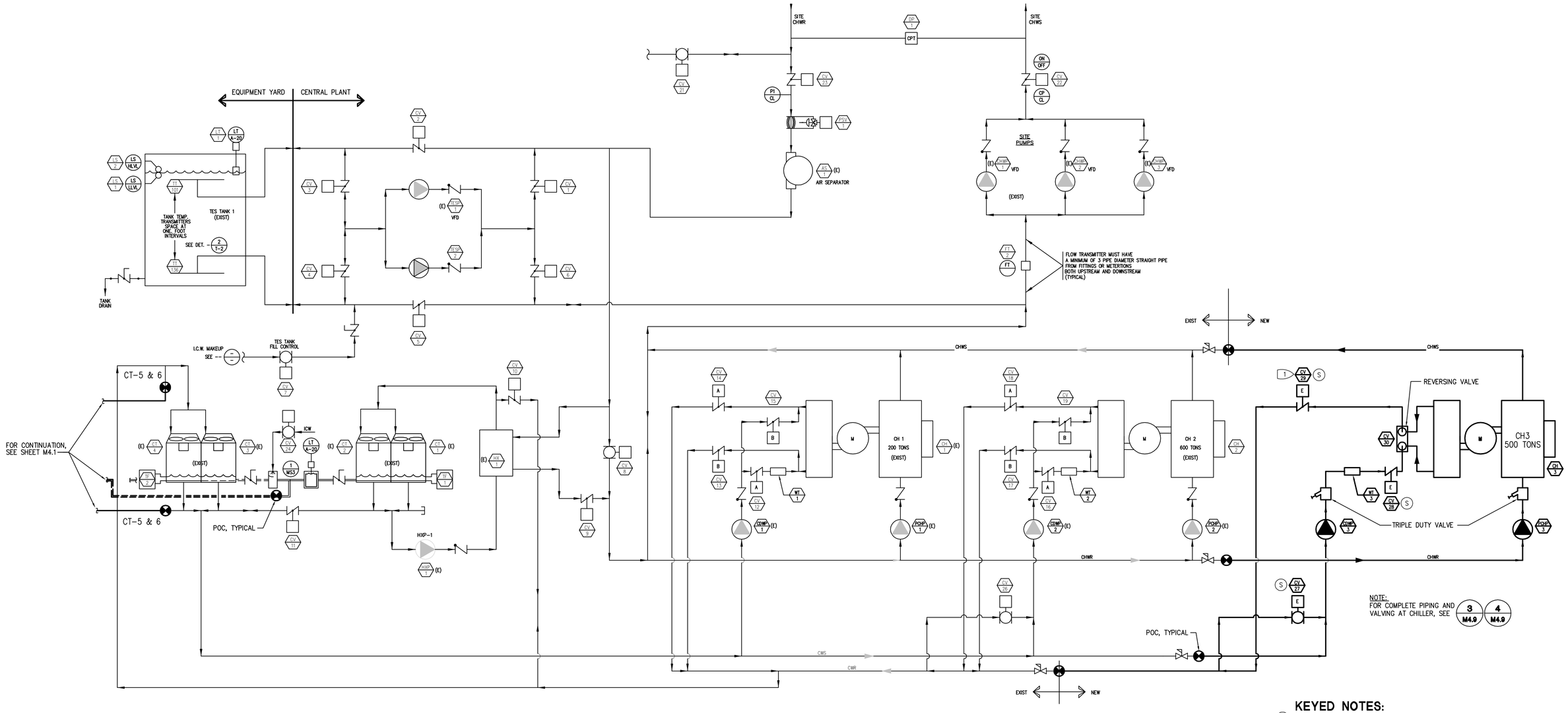

KEYED NOTES:

(S) ITEM NOTED IS SUPPLIED BY 'SIEMENS'.

1 ALL CONTROL AND ISOLATION VALVES ARE OWNER FURNISHED, CONTRACTOR INSTALLED.

NO.	DATE	REVISIONS
4	07/17/12	RE-ISSUE FOR PLAN CHECK

REGISTERED PROFESSIONAL ENGINEER JAN P. BLACK No. 028813 Exp. 6/30/14 MECHANICAL STATE OF CALIFORNIA

PETERS engineering
2411 Alhambra Blvd, Ste. 100
Sacramento, CA 95817
Tel (916) 447-2841
www.peterseng.com
Job no. 10.063
consulting mechanical and electrical engineers

SMUD
SACRAMENTO MUNICIPAL UTILITY DISTRICT

DESIGNED: JB
DRAWN: JM
APPROVED:
DATE: JULY 17, 2012
SCALE: NTS

MICROGRID PROJECT

CHILLED AND CONDENSING WATER FLOW DIAGRAM AND INSTRUMENTATION

JOB NO.
SHEET NO. M-4.8
OF SHEETS

\10.063\drwgs\M4.8 CHILLED & CONDENSER WATER FLOW DIAGRAM.dwg, 7/17/2012 9:00:55 AM, jmatthews, 1:1

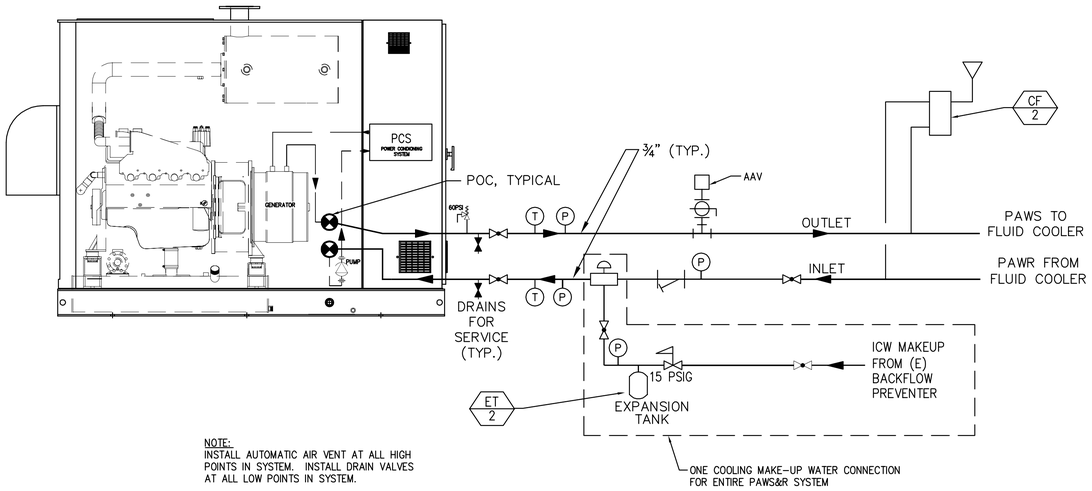

NOTE:
INSTALL AUTOMATIC AIR VENT AT ALL HIGH POINTS IN SYSTEM. INSTALL DRAIN VALVES AT ALL LOW POINTS IN SYSTEM.

2 GENERATOR COOLING LOOP PIPING
M-4.9 NO SCALE

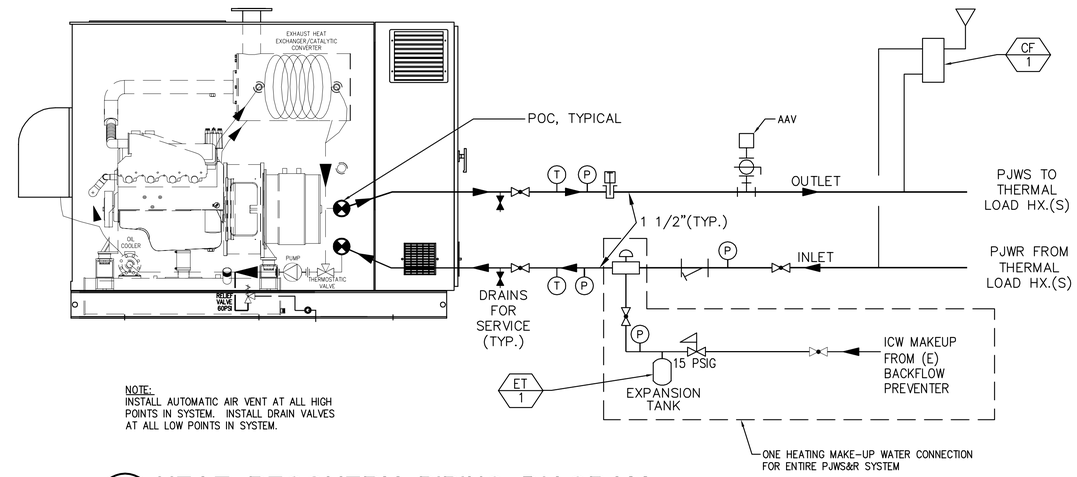

NOTE:
INSTALL AUTOMATIC AIR VENT AT ALL HIGH POINTS IN SYSTEM. INSTALL DRAIN VALVES AT ALL LOW POINTS IN SYSTEM.

1 HEAT RECOVERY PIPING DIAGRAM
M-4.9 NO SCALE

GENERAL NOTES

A ALL ITEMS SHOWN ARE DIAGRAMMATIC. CONTRACTOR SHALL REFER TO THE FLOOR PLANS FOR LOCATIONS OF ALL ITEMS.

B INSTALL ALL ITEMS REQUIRING SERVICE OR MONITORING IN AN EASILY ACCESSIBLE LOCATION

C ALL CONDENSER WATER PIPING SHALL BE INSTALLED BELOW THE SYSTEM PURGE LEVEL OF THE TOWER.

D ALL CONDENSER WATER SUCTION PIPING SHALL BE INSTALLED BELOW THE SUCTION OF THE PUMP EXCEPT FOR AT THE TOWERS.

E INSTALL PIPING IN A MANNER TO AVOID AIR POCKETS OR LOW POINTS WHERE POSSIBLE

F INSTALL FMD'S, BALANCING VALVES, CONTROL VALVES, FLOW SWITCHES A MINIMUM OF 5 PIPE DIAMETERS FROM ELBOWS, VALVES, ETC. ON INLET SIDE AND A MINIMUM OF 2 PIPE DIAMETERS ON OUTLET SIDE.

G INSTALL ALL PIPE SUPPORTS PER DRAWINGS AND SPECIFICATIONS.

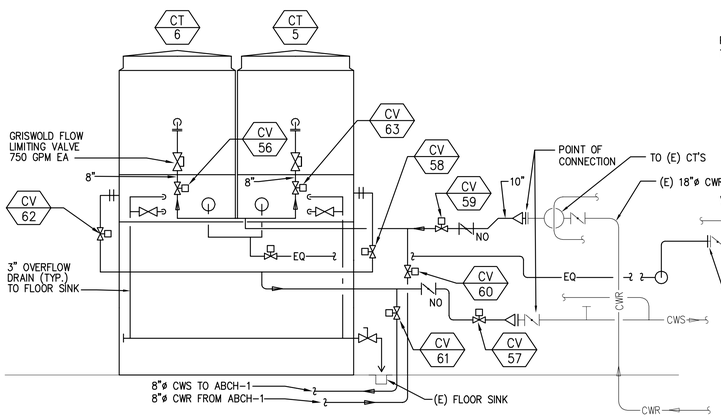

5 COOLING TOWER PIPING DIAGRAM
M-4.9 NO SCALE

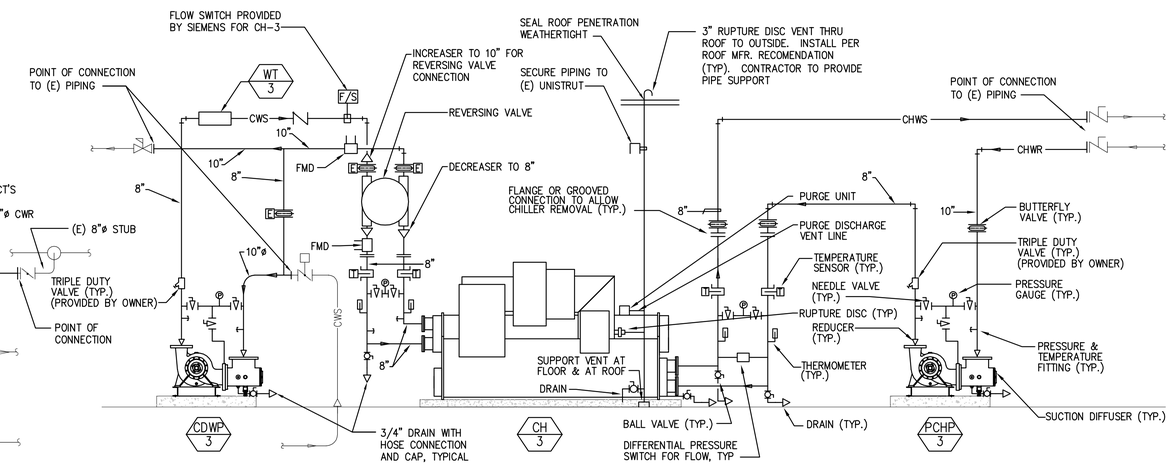

4 CHILLER PIPING DIAGRAM
M-4.9 NO SCALE

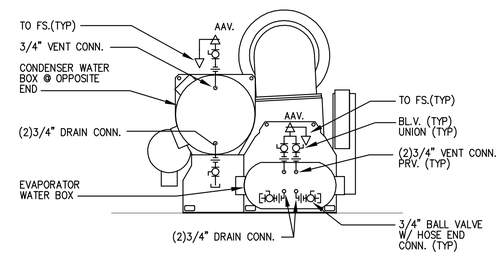

3 CHILLER/WATER BOX DRAIN & VENT CONNECTION
M-4.9 NO SCALE

NO.	DATE	REVISIONS
4	07/17/12	RE-ISSUE FOR PLAN CHECK

REGISTERED PROFESSIONAL ENGINEER JAN P. BLACK No. 028813 Exp. 6/30/14 MECHANICAL STATE OF CALIFORNIA

PETERS engineering
2411 Alhambra Blvd, Ste. 100
Sacramento, CA 95817
Tel (916) 447-2841
www.peterseng.com
Job no. 10.063
consulting mechanical and electrical engineers

SMUD
SACRAMENTO MUNICIPAL UTILITY DISTRICT

DESIGNED: JB
DRAWN: JM
APPROVED:
DATE: JULY 17, 2012
SCALE: NTS

MICROGRID PROJECT

HEAT RECOVERY AND GENERATOR LOOP DIAGRAMS AND INSTRUMENTATION

JOB NO.
SHEET NO. M-4.9
OF SHEETS

\10.063\dwgs\M4.9 HEAT RECOVERY AND GENERATOR LOOP DIAGRAM.dwg, 7/17/2012 9:00:57 AM, jmatthews, 1:1

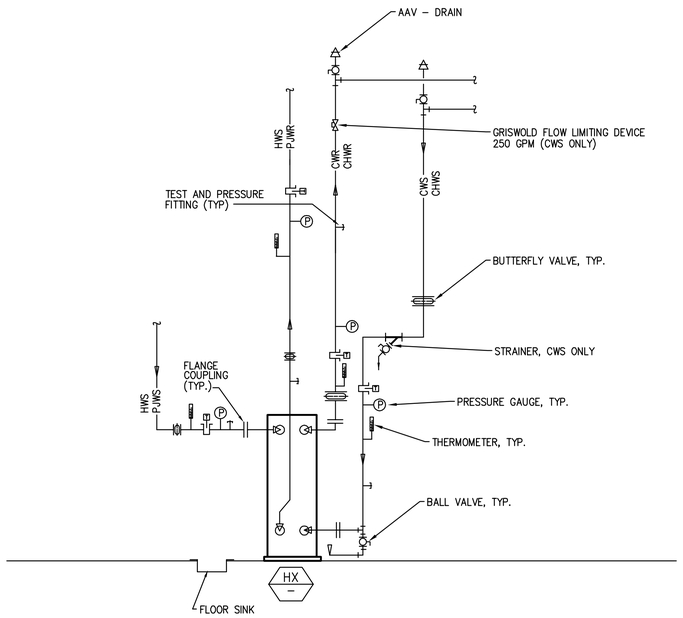

3 / M-4.10 HEAT EXCHANGER FLOW DIAGRAM

NO SCALE

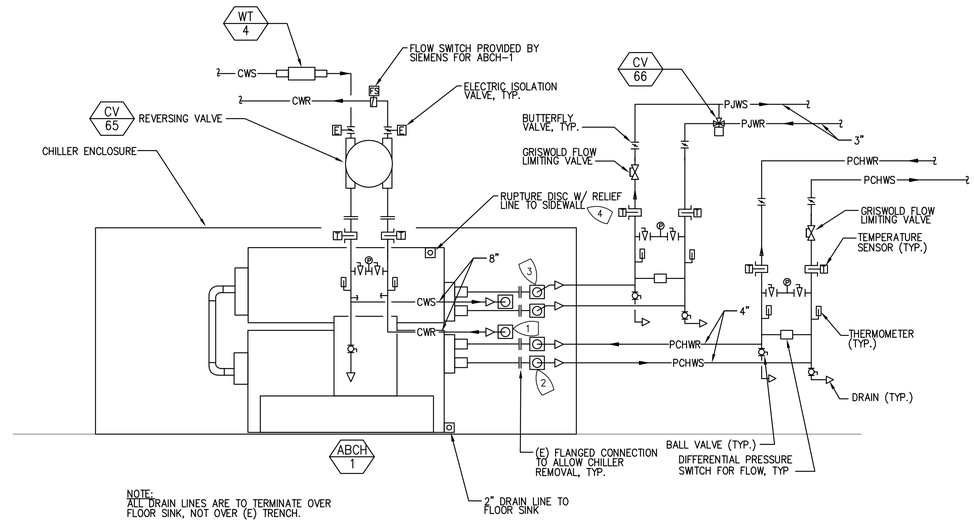

NOTE:
ALL DRAIN LINES ARE TO TERMINATE OVER FLOOR SINK, NOT OVER (E) TRENCH.

1 / M-4.10 ABCH-1 PIPING DIAGRAM

NO SCALE

KEYED NOTES:

1. CONNECT TO 6"ø CWS&R AT POINT OF CONNECTION AT CHILLER ENCLOSURE AND INCREASE TO 8"ø CWS&R PIPING.
2. CONNECT TO 6"ø PCHWS&R AT POINT OF CONNECTION AT CHILLER ENCLOSURE AND DECREASE TO 4"ø PCHWS&R PIPING.
3. CONNECT TO 4"ø PJWS&R AT POINT OF CONNECTION AT CHILLER ENCLOSURE AND DECREASE TO 3"ø PJWS&R PIPING.
4. FOR RELIEF LINE TERMINATION, SEE **4/M3.3**.

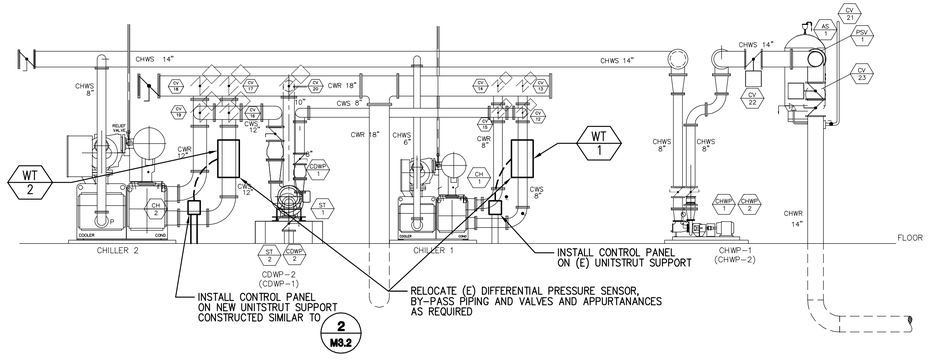

2 / M-4.10 ELEVATION

NO SCALE

NO.	DATE	REVISIONS
4	07/17/12	RE-ISSUE FOR PLAN CHECK

REGISTERED PROFESSIONAL ENGINEER JAN P. BLACK No. 028813 Exp. 6/30/14 MECHANICAL STATE OF CALIFORNIA

PETERS engineering
2411 Alhambra Blvd, Ste. 100
Sacramento, CA 95817
Tel (916) 447-2841
www.peterseng.com
Job no. 10.063
consulting mechanical and electrical engineers

SMUD
SACRAMENTO MUNICIPAL UTILITY DISTRICT

DESIGNED:	JB
DRAWN:	JM
APPROVED:	
DATE:	JULY 17, 2012
SCALE:	NTS

MICROGRID PROJECT

PIPING DIAGRAMS

JOB NO.

SHEET NO. **M-4.10**

OF SHEETS

\10.063\dwgs\M4.10 PIPING DIAGRAMS.dwg, 7/17/2012 9:00:58 AM, jmathews, 1:1

CERTIFICATE OF COMPLIANCE (Part 5 of 5) MECH-1C

Project Name	Date
SMUD CENTRAL PLANT	5/10/2011

Documentation Author's Declaration Statement

I certify that this Certificate of Compliance documentation is accurate and complete.

Name	GOLDIE SETTLES	Signature	Goldie Settles
Company	Peters Engineering	Date	5/10/2011
Address	2411 ALHAMBRA BLVD, SUITE 100	CEA # CEPE #	
City/State/Zip	SACRAMENTO, CA 95817	Phone	916-447-2841

The Principal Mechanical Designer's Declaration Statement

- I am eligible under Division 3 of the California Business and Professions Code to accept responsibility for the mechanical design.
- This Certificate of Compliance identifies the mechanical features and performance specifications required for compliance with Title-24, Parts 1 and 6 of the California Code of Regulations.
- The design features represented on this Certificate of Compliance are consistent with the information provided to document this design on the other applicable compliance forms, worksheets, calculations, plans and specifications submitted to the enforcement agency for approval with this building permit application.

Name	Jan P Black	Signature	Jan P. Black
Company	Peters Engineering	Date	5/10/2011
Address	2411 Alhambra Blvd., Suite 100	License #	028813
City/State/Zip	Sacramento, CA 95817	Phone	916-447-2841

Mandatory Measures
Indicate location on building plans of Note Block for Mandatory Measures. T24

MECHANICAL COMPLIANCE FORMS & WORKSHEETS (check box if worksheet is included)

For detailed instructions on the use of this and all Energy Efficiency Standards compliance forms, please refer to the 2008 Nonresidential Manual.
Note: The Enforcement Agency may require all forms to be incorporated onto the building plans.

- ☑ MECH-1C Certificate of Compliance. Required on plans for all submittals.
- ☐ MECH-2C Mechanical Equipment Summary is required for all submittals.
- ☐ MECH-3C Mechanical Ventilation and Reheat is required for all submittals with mechanical ventilation.
- ☐ MECH-4C Fan Power Consumption is required for all prescriptive submittals.

CENTRAL PLANT EQUIPMENT ONLY, MUST COMPLY WITH MANDATORY MEASURES.

MECHANICAL MANDATORY MEASURES: NONRESIDENTIAL MECH-MM

Project Name	Date
SMUD CENTRAL PLANT	5/10/2011

Equipment and System Efficiencies

§111:	Any appliance for which there is a California standard established in the Appliance Efficiency Regulations will comply with the applicable standard.
§115(a):	Fan type central furnaces shall not have a pilot light.
§123:	Piping, except that conveying fluids at temperatures between 60 and 105 degrees Fahrenheit, or within HVAC equipment, shall be insulated in accordance with Standards Section 123.
§124:	Air handling duct systems shall be installed and insulated in compliance with Sections 601, 602, 603, 604, and 605 of the CMC Standards.

Controls

§122(e):	Each space conditioning system shall be installed with one of the following:
1A.	Each space conditioning system serving building types such as offices and manufacturing facilities (and all others not explicitly exempt from the requirements of Section 112 (d)) shall be installed with an automatic time switch with an accessible manual override that allows operation of the system during off-hours for up to 4 hours. The time switch shall be capable of programming different schedules for weekdays and weekends and have program backup capabilities that prevent the loss of the device's program and time setting for at least 10 hours if power is interrupted; or
1B.	An occupancy sensor to control the operating period of the system; or
1C.	A 4-hour timer that can be manually operated to control the operating period of the system.
2.	Each space conditioning system shall be installed with controls that temporarily restart and temporarily operate the system as required to maintain a setback heating and/or a setup cooling thermostat setpoint.
§122(g):	Each space conditioning system serving multiple zones with a combined conditioned floor area more than 25,000 square feet shall be provided with isolation zones. Each zone: shall not exceed 25,000 square feet; shall be provided with isolation devices, such as valves or dampers that allow the supply of heating or cooling to be setback or shut off independently of other isolation areas; and shall be controlled by a time control device as described above.
§122(c):	Thermostats shall have numeric setpoints in degrees Fahrenheit (F) and adjustable setpoint stops accessible only to authorized personnel.
§122(b):	Heat pumps shall be installed with controls to prevent electric resistance supplementary heater operation when the heating load can be met by the heat pump alone
§122(a&b):	Each space conditioning system shall be controlled by an individual thermostat that responds to temperature within the zone. Where used to control heating, the control shall be adjustable down to 55 degrees F or lower. For cooling, the control shall be adjustable up to 85 degrees F or higher. Where used for both heating and cooling, the control shall be capable of providing a deadband of at least 5 degrees F within which the supply of heating and cooling is shut off or reduced to a minimum.

Ventilation

§121(e):	Controls shall be provided to allow outside air dampers or devices to be operated at the ventilation rates as specified on these plans.
§122(f):	All gravity ventilating systems shall be provided with automatic or readily accessible manually operated dampers in all openings to the outside, except for combustion air openings.
§121(f):	Ventilation System Acceptance. Before an occupancy permit is granted for a newly constructed building or space, or a new ventilating system serving a building or space is operated for normal use, all ventilation systems serving the building or space shall be certified as meeting the Acceptance Requirements for Code Compliance

Service Water Heating Systems

§113(c)	Installation
3.	Temperature controls for public lavatories. The controls shall limit the outlet Temperature to 110°F.
2.	Circulating service water-heating systems shall have a control capable of automatically turning off the circulating pump when hot water is not required.

NO.	DATE	REVISIONS
4	07/17/12	RE-ISSUE FOR PLAN CHECK

REGISTERED PROFESSIONAL ENGINEER JAN P. BLACK No. 028813 Exp. 6/30/14 MECHANICAL STATE OF CALIFORNIA

PETERS engineering
2411 Alhambra Blvd, Ste. 100
Sacramento, CA 95817
Tel (916) 447-2841
www.peterseng.com
Job no. 10.063
consulting mechanical and electrical engineers

SMUD
SACRAMENTO MUNICIPAL UTILITY DISTRICT

DESIGNED:	JB
DRAWN:	JM
APPROVED:	
DATE:	JULY 17, 2012
SCALE:	NTS

MICROGRID PROJECT

TITLE 24

JOB NO.

SHEET NO. T24 OF SHEETS

\10.063\dwgs\T24 TITLE 24.dwg, 7/17/2012 9:01:00 AM, jmathews, 11

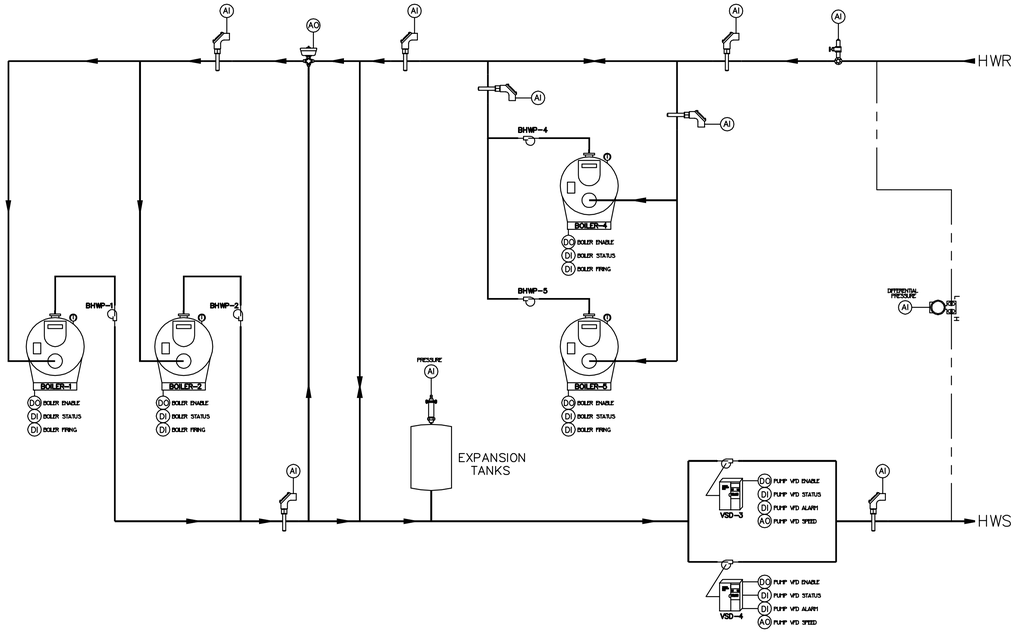

2 HEATING HOT WATER SYSTEM

M-5.1 NO SCALE LOCATION: CENTRAL PLANT

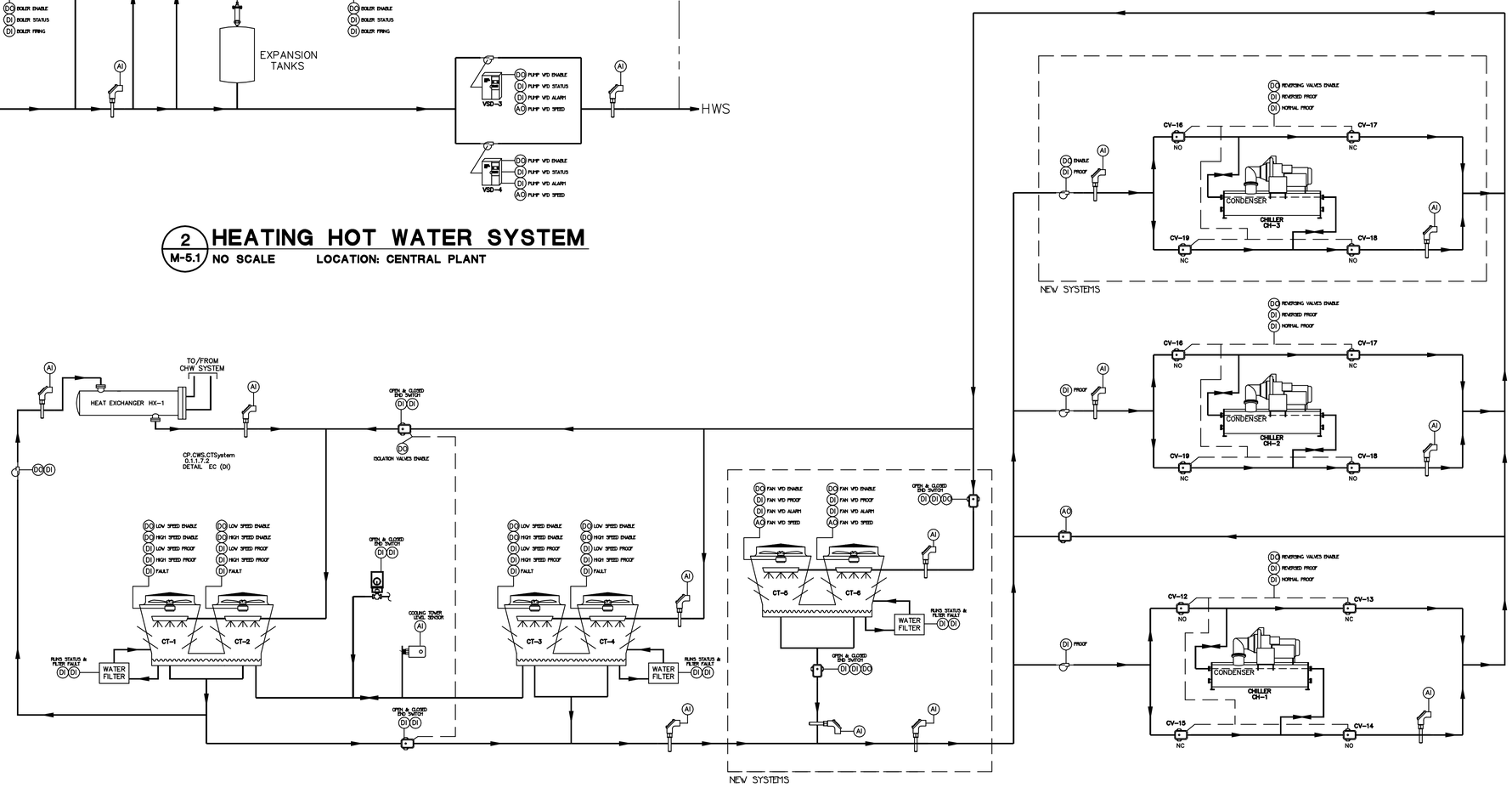

1 CONDENSER WATER SYSTEM

M-5.1 NO SCALE LOCATION: CENTRAL PLANT

NO.	DATE	REVISIONS
4	07/17/12	RE-ISSUE FOR PLAN CHECK

REGISTERED PROFESSIONAL ENGINEER JAN P. BLACK No. 028813 Exp. 6/30/14 MECHANICAL STATE OF CALIFORNIA

PETERS engineering
2411 Alhambra Blvd, Ste. 100
Sacramento, CA 95817
Tel (916) 447-2841
www.peterseng.com
Job no. 10.063
consulting mechanical and electrical engineers

SMUD
SACRAMENTO MUNICIPAL UTILITY DISTRICT

DESIGNED:	JB
DRAWN:	JM
APPROVED:	
DATE:	JULY 17, 2012
SCALE:	NTS

MICROGRID PROJECT

CONTROLS

JOB NO.

SHEET NO. M-5.1

OF SHEETS

\10.063\drwgs\M5.1 CONTROLS.dwg, 9/4/2012 7:32:01 AM, jmatthews, 1:1

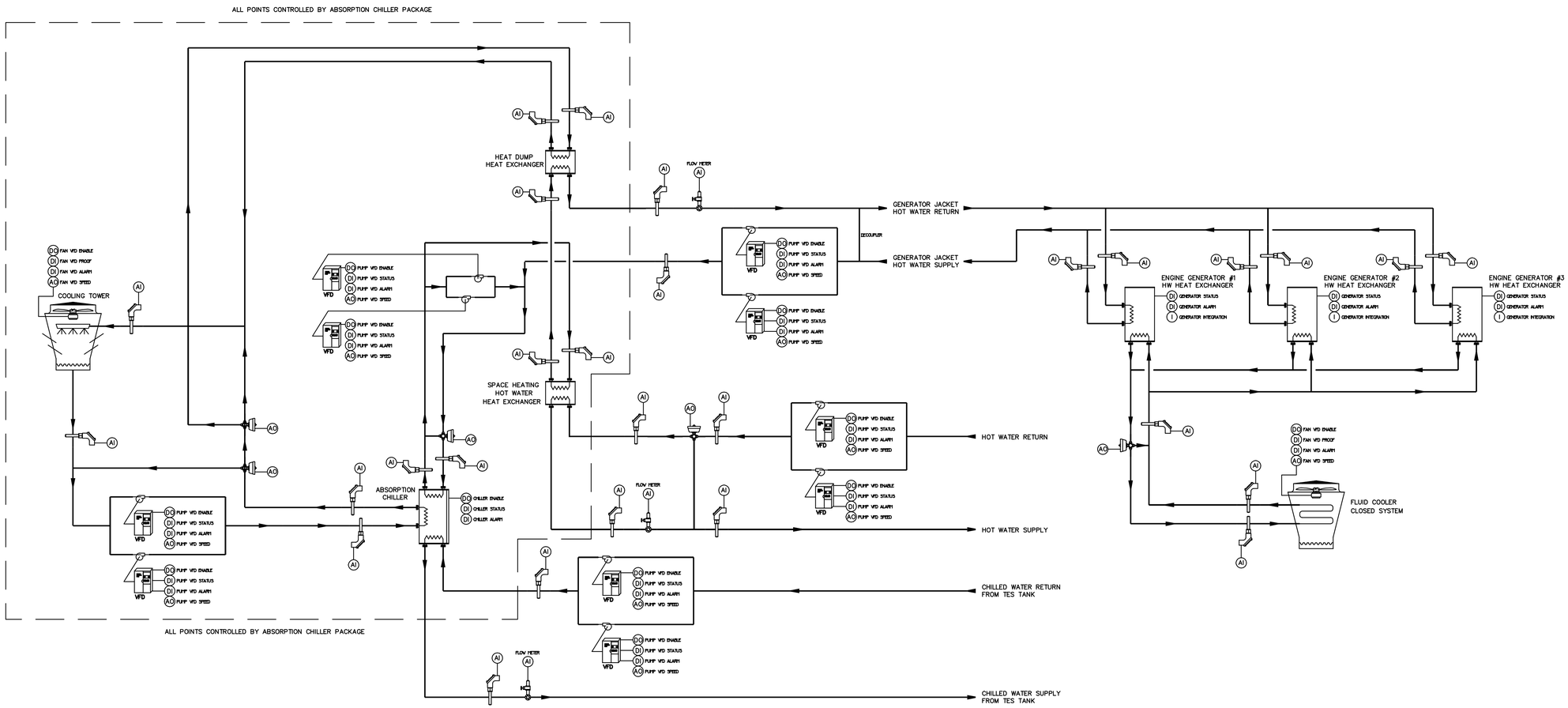

1 / M-5.2 CHILLED WATER SYSTEM

NO SCALE LOCATION: CENTRAL PLANT

NO.	DATE	REVISIONS
4	07/17/12	RE-ISSUE FOR PLAN CHECK

REGISTERED PROFESSIONAL ENGINEER JAN P. BLACK No. 028813 Exp. 6/30/14 MECHANICAL STATE OF CALIFORNIA

PETERS engineering
2411 Alhambra Blvd, Ste. 100
Sacramento, CA 95817
Tel (916) 447-2841
www.peterseng.com
Job no. 10.063
consulting mechanical and electrical engineers

SMUD
SACRAMENTO MUNICIPAL UTILITY DISTRICT

DESIGNED:	JB
DRAWN:	JM
APPROVED:	
DATE:	JULY 17, 2012
SCALE:	NTS

MICROGRID PROJECT

CONTROLS

JOB NO.

SHEET NO. M-5.3

OF SHEETS

\10.063\drwgs\M5.3 CONTROLS.dwg, 8/4/2012 7:32:03 AM, jmatthews, 1:1

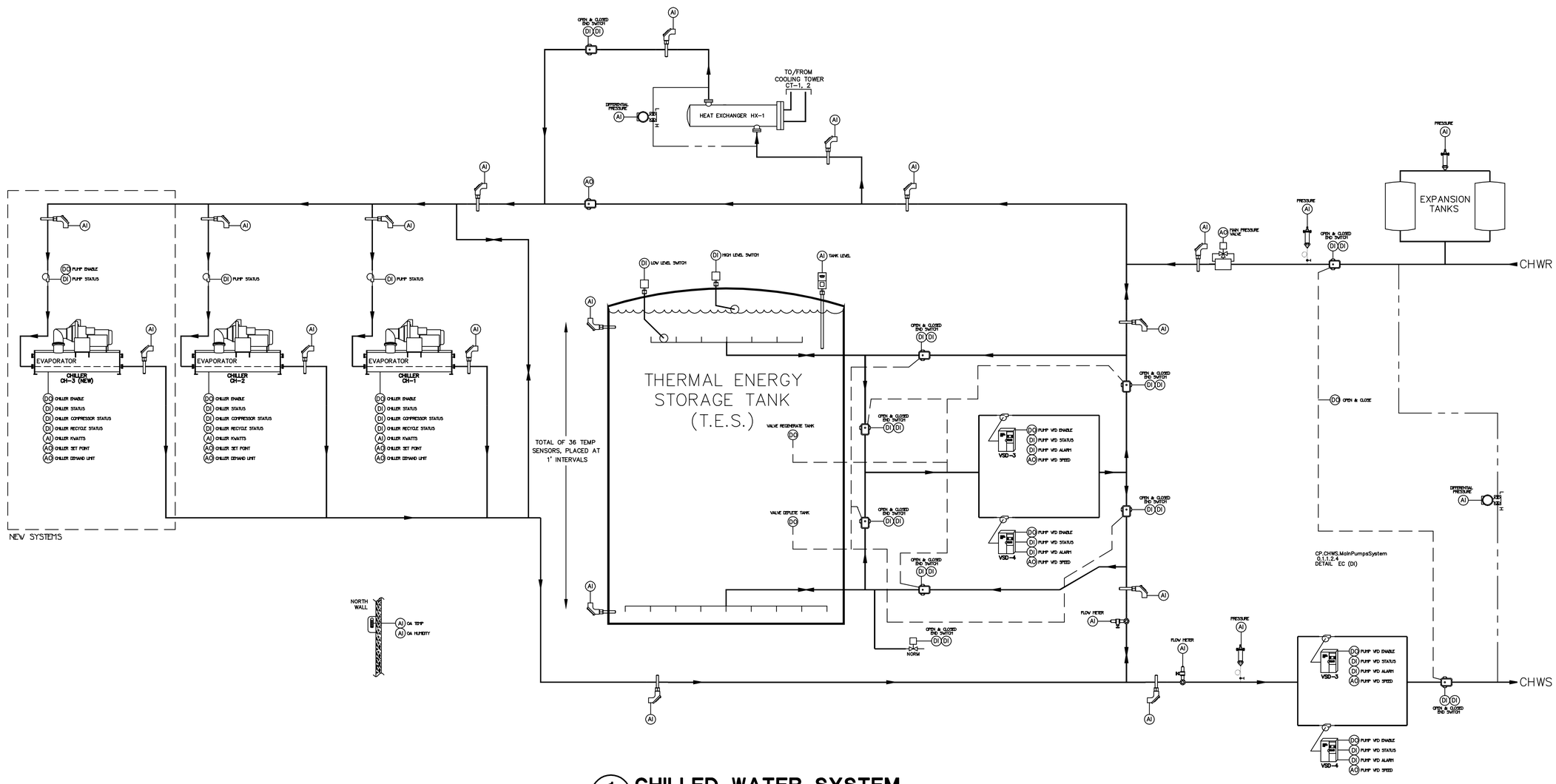

1 / M-5.2 CHILLED WATER SYSTEM

NO SCALE LOCATION: CENTRAL PLANT

NO.	DATE	REVISIONS
4	07/17/12	RE-ISSUE FOR PLAN CHECK

REGISTERED PROFESSIONAL ENGINEER JAN P. BLACK No. 028813 Exp. 6/30/14 MECHANICAL STATE OF CALIFORNIA

PETERS engineering
2411 Alhambra Blvd, Ste. 100
Sacramento, CA 95817
Tel (916) 447-2841
www.peterseng.com
Job no. 10.063
consulting mechanical and electrical engineers

SMUD
SACRAMENTO MUNICIPAL UTILITY DISTRICT

DESIGNED: JB
DRAWN: JM
APPROVED:
DATE: JULY 17, 2012
SCALE: NTS

MICROGRID PROJECT

CONTROLS

JOB NO.

SHEET NO. M-5.2

OF SHEETS

\10.063\drwgs\M5.2 CONTROLS.dwg, 9/4/2012 7:32:05 AM, jmatthews, 1:1

GENERAL NOTES

APPLICABLE TO ALL DRAWINGS UNLESS NOTED OR SHOWN OTHERWISE

GENERAL NOTES

100SN001-1

1. Interpretation of Drawings & Specifications
   a. For convenience, specifications have been prepared for this project and are arranged in several sections, but such separation shall not be considered as the limits of the work required of any separate trade. The terms and conditions of such limitations are wholly between the contractor and his subcontractors.
   b. In general, the working details will indicate dimensions, position and kind of construction, and the specifications, qualities and methods. Any work indicated on the working details and not mentioned in the specifications, or vice versa, shall be furnished as though fully set forth in both. Work not particularly detailed, marked or specified, shall be the same as similar parts that are detailed, marked or specified. If conflicts occur on drawings and/or specifications, the most expensive materials or methods will prevail.
   c. Should an error appear in the working details or specifications or in work done by others affecting this work, the Contractor shall notify SMUD at once and in writing. If the Contractor proceeds with the work so affected without having given such written notice and without receiving the necessary approval, decision or instructions in writing from the Owner, then he shall have no valid claim against the Owner, for the cost of so proceeding and shall make good any resulting damage or defect. No verbal approval, decision, or instruction shall be valid or be the basis for any claim against the Owner, its officers, employees or agents. The foregoing includes typical errors in the specifications or notational errors in the working details where the interpretation is doubtful or where the error is sufficiently apparent as to place a reasonably prudent contractor on notice that, should he elect to proceed, he is doing so at his own risk.
2. Construction shall conform to all applicable codes and regulations.
3. Shop Drawing Note:
   a. Shop Drawings shall be submitted in the form as specified in special conditions.
   b. The purpose of Shop Drawings submittals by the Contractor is to demonstrate to the Structural Engineer that he understands the design concept by indicating which material he intends to furnish and install, and by detailing the fabrication and installation methods he intends to use on a stand alone set of documents. Duplication of design documents for the purpose of shop drawings is not acceptable.
   c. Prior to fabrication, Shop Drawings shall be submitted for review by the Structural Engineer. Shop Drawing submittals shall include, but are not necessarily limited to, structural steel, reinforcing steel, & glued laminated beams.
   d. Prior to submission the Contractor shall review all submittals for conformance with the Contract Documents and shall stamp submittals as being "Reviewed for Conformance".
   e. Shop Drawings submittals processed by the Structural Engineer are not Change Orders.
   f. Any detail on the Shop Drawing that deviates from the Contract Documents shall clearly be marked with the note "This a change".
   g. Shop drawings or calculations submitted for review that require resubmittal for re-review shall be billed hourly for such time to the General Contractor. Re-review will not proceed without written approval from the General Contractor for additional engineering review services.
4. Safety Note:
   a. It is the Contractors responsibility to comply with the pertinent sections, as they apply to this project, of the "Construction Safety Orders" issued by the State of California latest edition, and all OSHA requirements.
   b. The Contractor shall be responsible for adequate design and construction of all forms and shoring required.
   c. The Owner and the Structural Engineer do not accept any responsibility for the Contractor's failure to comply with these requirements.
5. The contractor shall notify SMUD and Structural Engineer where a conflict or discrepancy occurs between the Structural drawings and any other portion of the Contract Documents or existing field conditions. Such notification shall be given in due time so as not to affect the construction schedule. In case of a conflict between Structural drawings and specifications the more restrictive condition shall take precedence unless written approval has been given for the least restrictive. Contractor shall verify all dimensions prior to commencing any work.
6. Where no specific detail is shown, the construction shall be identical or similar to that indicated for like cases of construction on this project. Should there be any question, contact SMUD and Structural Engineer prior to proceeding.
7. When construction attaches to an existing building, a complete set of drawings of the existing building shall be kept on the job site. Contractor to obtain these drawings from the Owner.
8. Contractor shall provide an allowance equal to 2% of the bid for structural steel, misc. iron and reinforcing steel to be used at the discretion of the Structural Engineer. Unused amount to revert to the Owner upon completion of the job.
9. Any substitutions for structural members, hardware or details shall be reviewed by SMUD and Structural Engineer. Such review will be billed on a time and materials basis to the General Contractor with no guarantee that the substitution will be allowed.
10. Do not scale drawings. Contact SMUD or Structural Engineer for any dimensions not shown.
11. These drawings are not complete until reviewed and accepted by local Building Officials and signed by the Owner and the Structural Engineer.

ABBREVIATIONS

100SN003-1

AB ----------- Anchor Bolt
abv ----------- Above
blw ----------- Below
bof ----------- Bottom of Footing
btwn ----------- Between
cc ----------- Center to Center
CTJ ----------- Control Joint
CJP ----------- Complete Joint Penetration
clr ----------- Clear
CMU ----------- Concrete Masonry Unit
CJ ----------- Construction Joint
cont ----------- Continuous
contr ----------- Contractor
csk ----------- Countersink
DF ----------- Douglas Fir
DL ----------- Dead Load
do ----------- Ditto
dwg ----------- Drawing
(e) ----------- Existing
EF ----------- Each Face
EJ ----------- Expansion Joint
El ----------- Elevation
EN ----------- Edge Nailing
eos ----------- Edge of Slab
eq ----------- Equal
EW ----------- Each Way
EWEF ----------- Each Way Each Face
FB ----------- Face of Block(or Brick) or Flat Bar
FC ----------- Face of Concrete or Framing Clip(Simpson A35)
FF ----------- Finish Floor
FS ----------- Face of Stud or Far Side
ga ----------- Gauge or gage
glb ----------- Glued Laminated Beam
HB ----------- Headed Bolt
hdr ----------- Header
HSB ----------- High Strength Bolt
HSS ----------- Hollow Structural Section
ht ----------- Height
jh ----------- Joist Hanger
LL ----------- Live Load
LLH ----------- Long Leg Horizontal
LLV ----------- Long Leg Vertical
LS ----------- Lag Screw
LW ----------- Light Weight
LWIC ----------- Light Weight Insulating Conc
MB ----------- Machine Bolt
mfr ----------- Manufacturer
MI ----------- Malleable Iron
(n) ----------- New
NIC ----------- Not in Contract
NS ----------- Near Side
nts ----------- Not to Scale
NW ----------- Normal Weight
OH ----------- Opposite Hand
OSB ----------- Oriented Strand Board
pc ----------- Piece
PJP ----------- Partial Joint Penetration
PT ----------- Pressure Treated
rwd ----------- Redwood
SC ----------- Slip Critical
shtg ----------- Sheathing
sim ----------- Similar
SMS ----------- Sheet Metal Screw
SP ----------- Structural Panel
stfnr ----------- Stiffener
stgrd ----------- Staggered
t&b ----------- Top & Bottom
t&g ----------- Tongue & Groove
thrd ----------- Threaded
tn ----------- Toe Nail
to ----------- Top of
toc ----------- Top of Concrete (slab uno)
tof ----------- Top of Footing or Top of Framing
tos ----------- Top of Steel
tow ----------- Top of Wall
TS ----------- Tube Steel
uno ----------- Unless Noted Otherwise
w/ ----------- with
w/o ----------- without
wp ----------- Work Point
WS ----------- Wood Screw
WWF ----------- Welded Wire Fabric
℄ ----------- Centerline
PL ----------- Plate
WF ----------- Wide Flange
----------- Number or Pounds
sq ----------- Square
⌀ ----------- Round
(hatched box) ----------- Cont Wood in Section
(crossed box) ----------- Wood Blocking in Section
(diagonal box) ----------- End of Wood Piece
(a) ----------- "member" above
(b) ----------- "member" below

DESIGN CRITERIA

100SN002-1

1. Codes and Standards
   2007 California Building Code (CBC)
   ASCE 7-05
   ACI 318-05
   AISC 360-05, 341-05, 358-05
   ACI 530-05/ASCE 5-05/TMS 402-05
   ACI 530.1-05/ASCE 6-05/TMS 602-05
   2005 NDS
2. Vertical loads
   Roof Live Load = - psf
   Floor Live Load = - psf
   Floor Partition Live Load = - psf
   Corridors = N/A psf
   Live loads are reduced where permitted by code.
3. Lateral loads
   Seismic:
   Site Class D Cs = -
   Ss = 0.558 ; Sds = 0.504
   S1 = 0.235 ; Sd1 = 0.303
   R = - ; I = 1.0 ; Ip = 1.0
   Ωo = - ; Cd = -
   Occupancy Category: -
   Seismic Design Category: D
   Seismic Base Shear = - kips (NS dir.)
   = - kips (EW dir.)
   Seismic Force Resisting System: N/A
   Analysis Procedure: Eq. Lat'l Force
   Wind:
   Basic Wind Speed = 85 mph
   Exposure Category C
   Iw- = 1.0 ; GCpi = -
4. Soils Values
   Allowable soils pressure
   1) DL 1500 psf
   2) DL + LL 1500 psf
   3) DL + LL + Seismic 1500 psf
   Footing
   Minimum depth = 12"
   Minimum width = 12"

STATEMENT OF STRUCTURAL SPECIAL INSPECTIONS AND TESTING

100SN004-1

1. Special inspections and testing shall be provided by an inspection agency, employed by the owner, and qualified by the building official to inspect the particular type of construction. Tests and inspections, as required by sections 109, 1704, 1707, and 1708 of the 2007 CBC, shall be performed during construction on the types of work listed below:

	Inspections	Testing
☐ Steel Construction	Section 1704.3 & Table 1704.3	Section 1708.4
■ Concrete Construction	Section 1704.4 & Table 1704.4	Section 1708.3
☐ Masonry Construction-Level 1	Section 1704.5 & Table 1704.5.1	Table 1708.1.2
☐ Masonry Construction-Level 2	Section 1704.5 & Table 1704.5.3	Table 1708.1.4
☐ Wood Construction	Section 1704.6	-
☐ High-Load Diaphragm	Section 1704.6.1	-
☐ Soils	Section 1704.7 & Table 1704.7	-
☐ Pile Foundations	Section 1704.8 & Table 1704.8	-
☐ Pier Foundations	Section 1704.9 & Table 1704.9	-

2. Inspections may be continuous or periodic as allowed by the individual material or component inspection sections and tables of section 1704.
3. The special inspector shall submit inspection reports to the building official and the design professional in responsible charge. The reports shall indicate whether work inspected conformed to the Construction Documents. Any discrepancies shall be immediately brought to the attention of the Contractor for correction. If discrepancies are not corrected, they shall be brought to the attention of the building official and the design professional in responsible charge.
4. All Special Inspection Agencies / Individuals and Shop Fabricators shall be approved by the building official prior to commencement of work.
5. Testing and inspection records shall be retained until completion of construction.
6. The Contractor shall submit a written statement to the building official acknowledging responsibility for construction of the main lateral-force resisting system prior to commencement of that work as required by section 1706 of the 2007 CBC.
7. Special inspections for seismic and wind resistance shall be conducted for all items listed in section 1705.3 and 1705.4 as applicable. Special inspections for seismic resistance shall include all items in section 1707. Structural testing for seismic resistance shall be in accordance with section 1708.
8. Masonry Construction Level 2 applies to structures classified as occupancy category IV only.
9. All soils and foundation excavation inspections shall be by the Geotechnical Engineer of Record.
10. For testing and inspection requirements for non-structural materials and components, see construction documents and comply with chapter 17 of the 2007 CBC

FOUNDATIONS

200SN001-1

1. All foundation work shall be done in accordance with the requirements of the Soils Report # N/A
2. Foundations shall bear on native soils.
3. All filling, backfilling and compaction shall be done under the observation of a representative of the Soils Engineer and must be compacted to the minimum density specified in accordance with the procedure outlined in the soils report.
4. Building pad construction shall conform to the requirements of the soils report. The extent and depth of overexcavation and placement of engineered fill shall at a minimum be as shown on the plans. Final depth and extent of excavation and fill shall be determined at time of construction by a representative of the Soils Engineer. Foundation depths indicated on plans are for estimating purposes only.
5. Bottoms of all foundations shall be level. Changes in bottom of foundation elevation shall be made according to Stepped Footing Detail on the Typical Detail Sheet.
6. Foundation concrete may be placed directly into neat excavations provided the excavations are stable (as determined by a representative of the Soils Engineer). Otherwise, foundations shall be fully formed. Use minimum planking shown to protect against sloughing, as required. Planking does not replace formwork required to stabilize excavation.

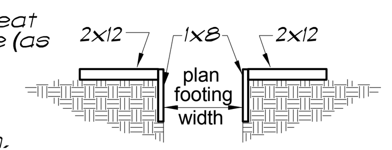

7. The surface of all horizontal construction joints shall be cleaned & roughened by exposing clean aggregate solidly embedded in mortar matrix.
8. Notify the Structural Engineer 48 hours before casting foundations.
9. A representative of the Soils Engineer shall advise the Building Official in writing that:
   a. The building pad was prepared in accordance with the soils report.
   b. The utility trenches have been properly backfilled and compacted and;
   c. The foundation excavation depth and material are adequate to achieve design bearing capacity; and forming comply with the soils report and approved plan.

Standard Rebar Sizes
Inch and Metric Equivalents 300SN003-1

INCH POUND BAR SIZE	DIAMETER (In.)	METRIC BAR SIZE	DIAMETER (mm)
#3	0.375	#10	9.5
#4	0.500	#13	12.7
#5	0.625	#16	15.9
#6	0.750	#19	19.1
#7	0.875	#22	22.2
#8	1.000	#25	25.4
#9	1.128	#29	28.7
#10	1.270	#32	32.3
#11	1.410	#36	35.8
#14	1.693	#43	43.0
#18	2.257	#57	57.3

CONCRETE

300SN001-1

1. Structural concrete shall attain 28 day compressive strength as required in note #29. Maximum slump shall not exceed 4 inches.
2. Concrete mix designs shall be prepared by a registered Civil Engineer, reviewed by Owner's testing laboratory and submitted to the Structural Engineer for review.
3. Cementitious materials:
   Cement shall conform to ASTM C-150 type I or II.
   Fly ash shall conform to ASTM C-618. Max. quantity of flyash shall be as given in specs (15% max uno).
4. Concrete aggregates shall conform to ASTM C-33 for normal weight concrete and ASTM C-330 for lightweight concrete.
5. Non-shrink grout or drypack shall consist of a premixed nonmetallic formula.
6. Reinforcing steel shall conform to ASTM A-615 Grade 60 for #4 and larger, and ASTM A-615 Grade 40 for #3 and smaller, except reinforcing steel to be welded shall conform to ASTM A-706. Contractor shall submit rebar mill certificates.
7. All preheating and welding of reinforcing bars shall be done in accordance with AWS D1.4 latest edition and shall be continuously inspected by a qualified laboratory. Contractor shall furnish WPS for all rebar welding to the laboratory.
8. Reinforcing steel shall be fabricated according to "Manual of Standard Practice for Reinforced Concrete Construction".
9. Wire fabric shall conform to ASTM A-185.
10. Dimensions shown for location of reinforcing are to the face of bars listed and denote clear coverage. Non-prestressed, cast-in-place concrete coverage shall be as follows, uno:
    Concrete deposited directly against ground (except slabs)--- 3"
    Concrete exposed to ground or weather but placed in forms:
    #5 and smaller------------------------------ 1-1/2"
    #6 and larger------------------------------ 2"
    Beams & Columns (ties)------------------------ 1-1/2"
    Beams & Columns (main reinforcing)---------------- 2"
    Cast-In-Place Walls (exterior face & soil side)--------- see above
    Cast-In-Place Walls (interior face-#11 & smaller)------- 3/4"
    Tilt-Up Walls------------------------------ see details
    Slabs (on forms)---------------------------- 3/4"
    Slabs (on ground)------------------- 2" clear from top uno
11. Splices in continuous reinforcement shall be lapped uno, see schedule this sheet. Splices in adjacent bars shall be greater than 5'-0" apart. Splice continuous bars in soil-bearing grade beams, structural slabs on grade and mat foundations as follows uno: top bars at centerline of support; bottom bars at mid-span. Splice continuous bars in elevated slabs and beams, etc. as follows uno: top bars at mid-span; bottom bars at centerline of support. All bars size #14 and larger shall be continuous for full length shown or spliced with mechanical couplers as noted in details. Splices in WWF shall be 1-1/2 meshes wide.
12. The minimum clear spacing between parallel bars in a layer shall not be less than the larger of bar diameter, 1", or 33% greater than the maximum aggregate size (nominal), whichever is greatest. This requirement also applies to the clear spacing between different layers of parallel bars and to the clear distance between a contact lap splice and adjacent splices or bars.
13. All hooks shall be standard hooks unless otherwise shown or noted. At walls, provide hooks at ends of all reinforcing at ends, corners and intersections, uno.
14. Construction joints shall be made rough and all laitance removed from the surface. Concrete may be roughened by chipping the entire surface, sand blasting, or raking the surface to provide 1/4" deep deformations.
15. Remove all debris from forms before casting any concrete.
16. Reinforcing, dowels, bolts, anchors, sleeves, etc. to be embedded in concrete shall be securely positioned before placing concrete.
17. Anchor bolts (AB's) cast in concrete or masonry for wall sill and ledger\ applications shall be headed bolts with cut threads conforming to ASTM A307, uno. Refer to "Wood" notes for additional requirements for bolts in contact with pressure treated or fire retardant material. Refer to 'Structural Steel' note for requirements for anchor rods (AR's) cast in concrete for column base plate and steel embed applications.
18. Walls shall be cast in horizontal layers of 2'-0" maximum depth.
19. Concrete in walls, piers or columns shall set at least 2 hours before placing concrete in beams, spandrels, or slabs supported thereon.
20. Horizontal wall bars in multi-curtain cast in place walls shall be staggered.
21. Dowel all vertical reinforcing in walls and columns from foundation with same size bar.
22. Consolidate concrete placed in forms by mechanical vibrating equipment supplemented by hand-spading, rodding or tamping. Use equipment and procedures for consolidation of concrete in accordance with the recommended practices of ACI 309 to suit the type of concrete and project conditions. Concrete shall not be dropped through reinforcing steel (as in walls) so as to cause segregation of aggregates. In such cases hoppers and chutes or trunks of variable lengths shall be used so that the free unconfined fall of concrete shall not exceed 6 feet.
23. Drill through steel columns, beams and plates to pass continuous reinforcing.
24. No wood spreaders allowed. No wood stakes allowed in areas to be concreted.
25. Additional reinforcing in precast or tilt-up panels required for lifting stresses shall be supplied by Contractor.
26. Provide #5 x 4'-0" diagonal reinforcing at top and bottom of slab at all re-entrant corners typical. This applies to slab on grade, concrete over metal deck, and elevated structural slab conditions.
27. All saw cutting shall be done after initial set has occurred to avoid tearing or damage by the saw blade, but before initial shrinkage has occurred.
28. Notify Structural Engineer a minimum of 48 hours before placing any concrete.
29. CONCRETE STRENGTHS & MIX PROPERTIES:

Item	f'c at 28 days	Max Aggr. Size	Weight	Max w/cm* Ratio
A. Foundations	3000 psi	1-1/2"	NW	0.58
C. Columns, beams, walls, elevated slabs	4000 psi	1"	NW	0.50

* w/cm = Water : Cementitious material ratio

REINFORCEMENT LAP SPLICE SCHEDULE
300SN002-1
(All lengths shown are in inches.)
ACI 318-05
2006 IBC
2007 CBC

fc' = 3000 psi conc

Splice Class	Reinf Location	#3	#4	#5	#6	#7	#8	#9	#10	#11
B	Top	19	37	47	56	81	93	105	118	131
	Other	15	29	36	43	63	72	81	91	101

fc' = 3500 psi conc

Splice Class	Reinf Location	#3	#4	#5	#6	#7	#8	#9	#10	#11
B	Top	18	35	43	52	75	86	97	109	121
	Other	14	27	33	40	58	66	75	84	93

fc' = 4000 psi conc

Splice Class	Reinf Location	#3	#4	#5	#6	#7	#8	#9	#10	#11
B	Top	17	32	40	48	70	80	91	102	113
	Other	13	25	31	37	54	62	70	79	87

Notes:
1. Schedule applies to normal weight concrete with uncoated, Grade 60 reinforcing steel for #4 bars and larger (values for #3 bars based on Grade 40).
2. Top reinforcement is horizontal reinforcement located such that more than 12 inches of fresh concrete is cast in the member below the splice.
3. When lightweight concrete is used, multiply lap lengths by 1.30.
4. Where clear spacing of bars being spliced is less than 2 bar dia. OR where clear cover of bars being spliced is less than 1 bar dia., multiply lap lengths by 1.50, uno.
5. Where notes #3 AND #4 occur, multiply lap lengths by 2.00, uno.
6. Where Class A lap splice is noted in detail, divide lengths above by 1.30.

DRILLED-IN ANCHORS

305SN001-1

1. Epoxy anchors shall be Hilti RE500-SD per ESR-2322 or Simpson SET-XP per ESR-2508 for thr'd rod & rebar. Expansion anchors shall be Hilti KB-TZ per ESR-1917 or Simpson Strong-Bolt per ESR-1771. Type, size & embedment shall be indicated in drawings. Post-installed anchors for repair shall be evaluated on a case by case basis. Notify Structural Engineer for repairs.
2. Anchors shall be installed in accordance with the requirements given in the ICC report.
3. Unless noted otherwise anchors have been designed for special inspection. Provide Special Inspection as indicated in the ICC report.
4. When installing drilled-in anchors in existing concrete or masonry, use care and caution to avoid cutting or damaging existing reinforcing bars. Do not install anchors in prestressed concrete elements.
5. Anchors installed from the bottom into metal deck with concrete shall be installed in the center of the low flute of the decking unless noted otherwise in ICC report. The decking shall have a minimum thickness of 20 gauge. The minimum thickness of the concrete above the high flute of the metal deck shall be as indicated in the ICC report. See ICC report for additional requirements, including minimum dimensions for flute width and depth.
6. The inspection of the anchors shall be done by a qualified inspection agency and a report of the inspection results shall be submitted to the governing agency and Architect/Structural Engineer.

Buehler & Buehler
Structural Engineers, Inc.
600 Q Street, Suite 200, Sacramento, CA 95811
tel 916.443.0303 fax 916.443.0313

REGISTERED PROFESSIONAL ENGINEER
M. TODD THORP
No. 2990
Exp. 6/30/12
STRUCTURAL
STATE OF CALIFORNIA

NO.	DATE	REVISIONS
1	5/10/11	PLAN CHECK RESPONSES
3	11/4/11	PLAN CHECK SET
4	4/6/12	ISSUE FOR REBID

PETERS engineering
2411 Alhambra Blvd, Ste. 100
Sacramento, CA 95817
Tel (916) 447-2841
www.peterseng.com
Job no. 10.063
consulting mechanical and electrical engineers

SMUD
SACRAMENTO MUNICIPAL UTILITY DISTRICT

DESIGNED: -
DRAWN: TTT
APPROVED: -
DATE: 5/29/12
SCALE: 1 : 1

MICROGRID PROJECT

General Notes

JOB NO.
SHEET NO.
S-1.0
OF SHEETS

C:\Users\MelissaM\Desktop\Revit\S10-17700\S10-177_SMUD Microgrid_R2012_MAM.rvt
5/29/2012 3:40:16 PM

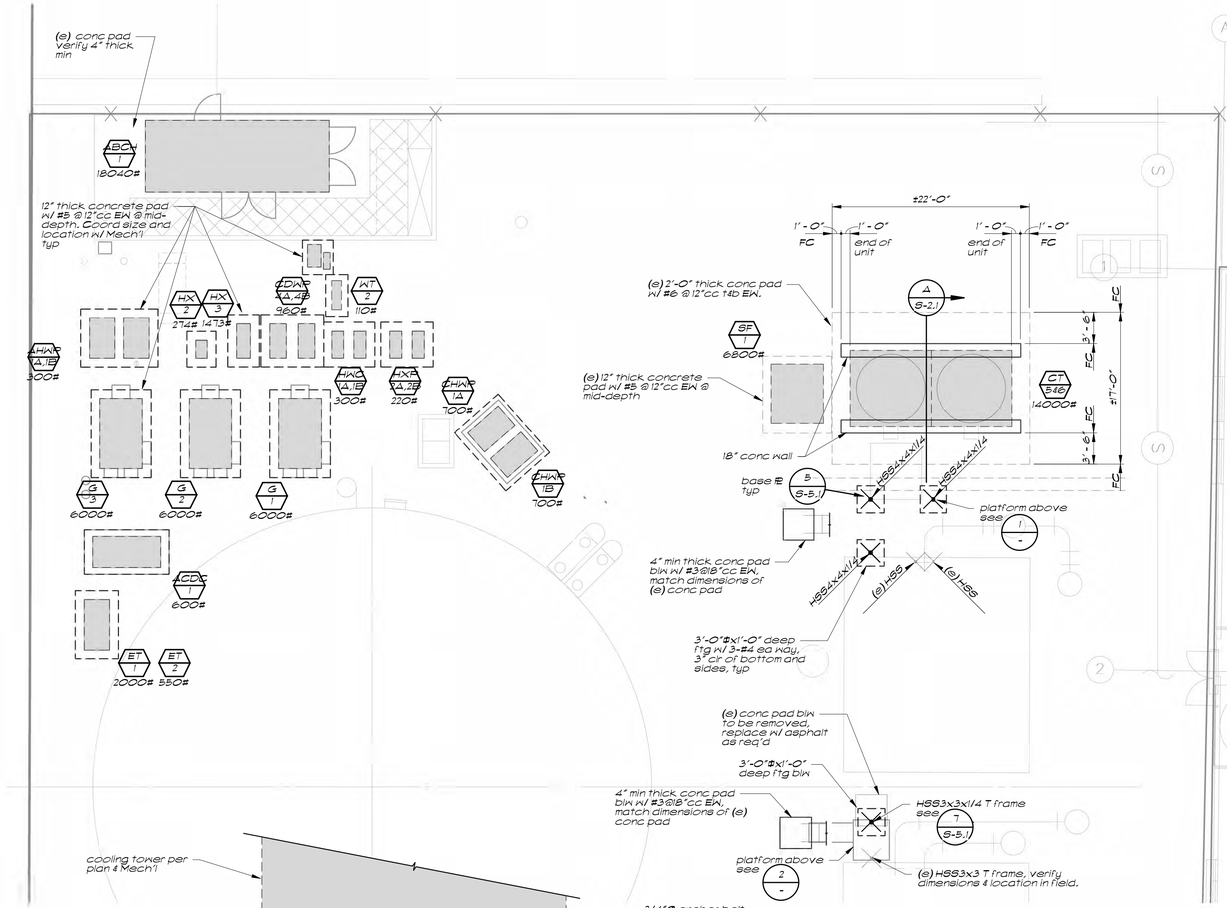

Partial Foundation & Equipment Layout Plan — 1/8" = 1'-0"

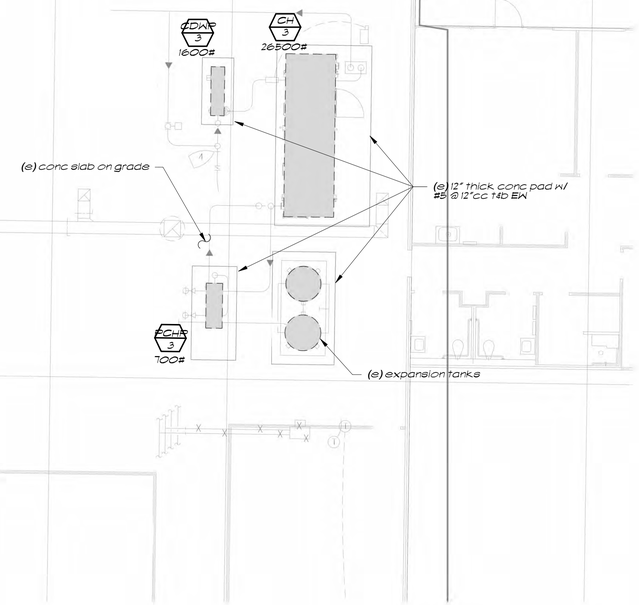

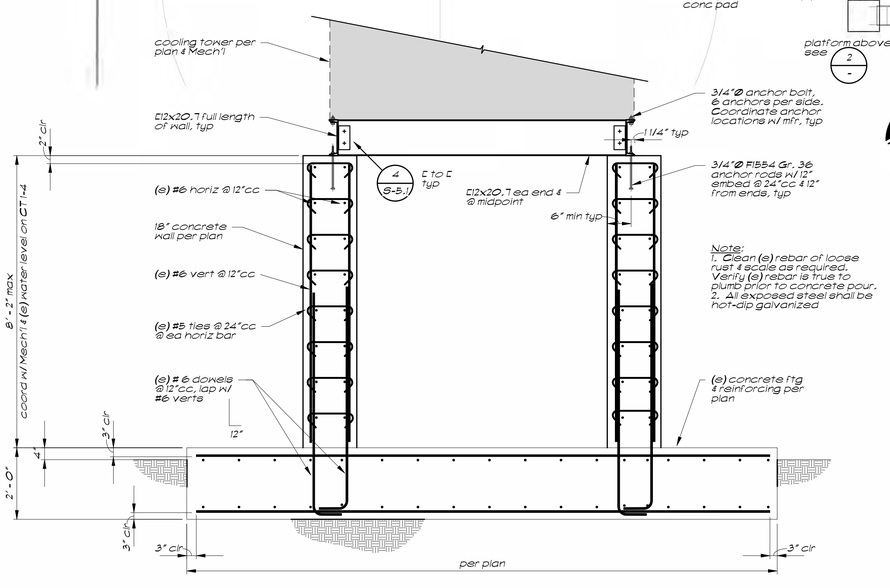

Section A/S-2.1 — 1/2" = 1'-0"

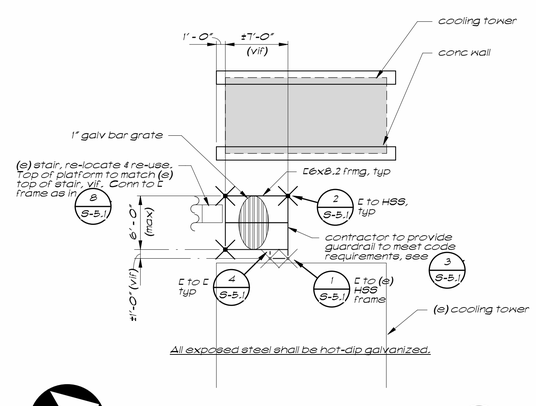

Platform Framing Plan 1/S-2.1 — 1/8" = 1'-0"

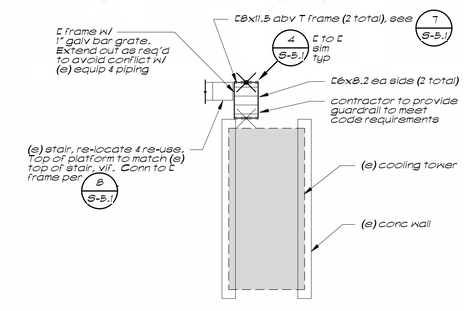

Platform Framing Plan 2/S-2.1 — 1/8" = 1'-0"

Buehler & Buehler Structural Engineers, Inc.
602 Q Street, Suite 200, Sacramento, CA 95811
tel 916.443.0303 fax 916.443.0313

REGISTERED PROFESSIONAL ENGINEER M. TODD THORP No. 2990 Exp. 6/30/12 STRUCTURAL STATE OF CALIFORNIA

C:\Users\MelissaM\Desktop\Revit\S10-17700\S10-177_SMUD Microgrid_R2012_MAM.rvt

5/29/2012 3:50:27 PM

NO.	DATE	REVISIONS
1	5/10/11	PLAN CHECK RESPONSES
3	11/4/11	PLAN CHECK SET
4	4/6/12	ISSUE FOR REBID

PETERS engineering
2411 Alhambra Blvd, Ste. 100
Sacramento, CA 95817
Tel (916) 447-2841
www.peterseng.com
Job no.10.063
consulting mechanical and electrical engineers

SMUD
SACRAMENTO MUNICIPAL UTILITY DISTRICT

DESIGNED:	TTT
DRAWN:	MR
APPROVED:	-
DATE:	5/29/12
SCALE:	As indicated

MICROGRID PROJECT

Partial Plans & Details

JOB NO.

SHEET NO.

S-2.1

OF SHEETS

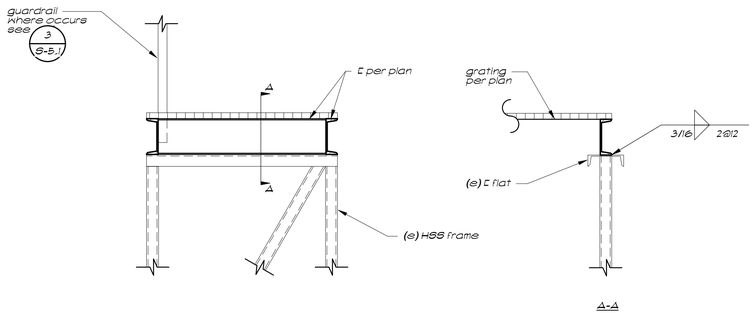

Detail 1 S-5.1 — 1" = 1'-0"

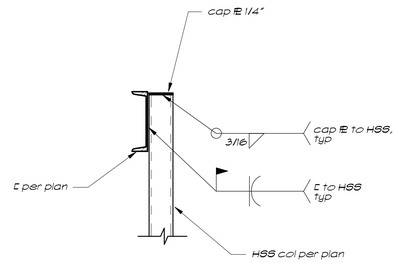

Detail 2 S-5.1 — 1" = 1'-0"

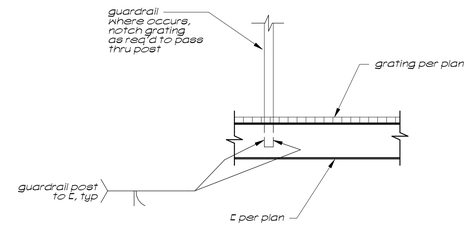

Detail 3 S-5.1 — 1" = 1'-0"

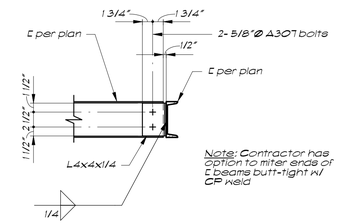

Detail 4 S-5.1 — 1" = 1'-0"

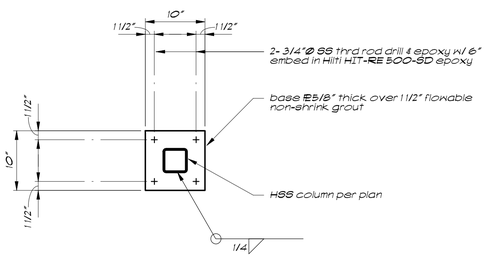

Detail 5 S-5.1 — 1" = 1'-0"

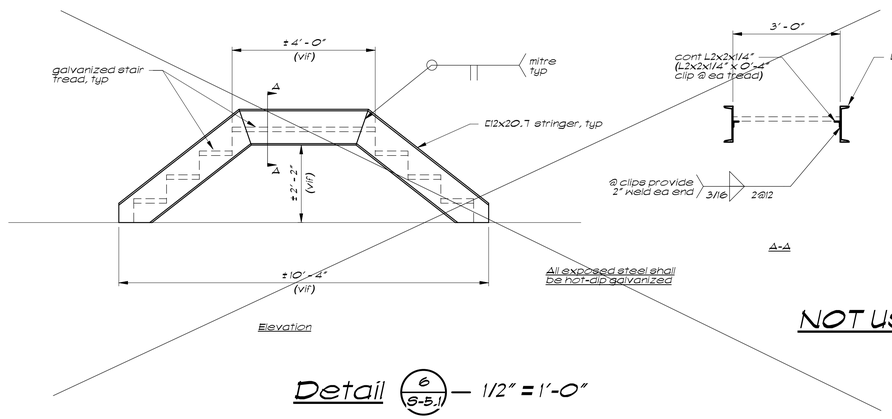

NOT USED

Detail 6 S-5.1 — 1/2" = 1'-0"

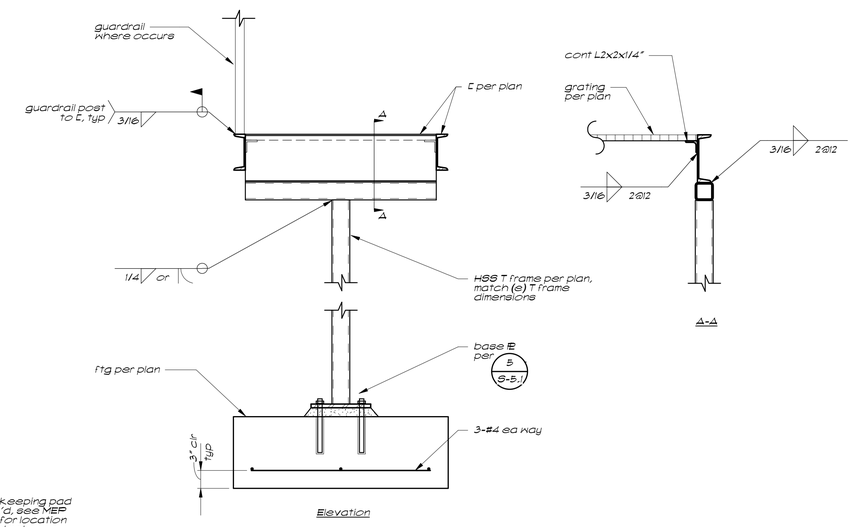

Detail 7 S-5.1 — 1" = 1'-0"

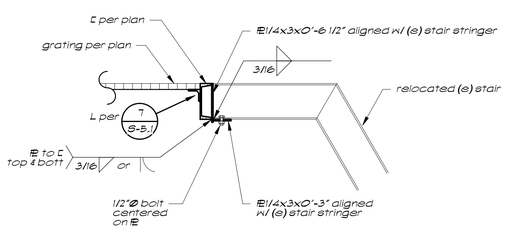

Detail 8 S-5.1 — 1" = 1'-0"

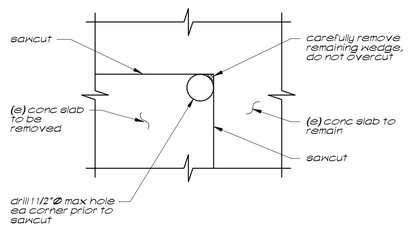

Sawcut Opening in Existing Slab or Wall 9 S-5.1

3295D012-4

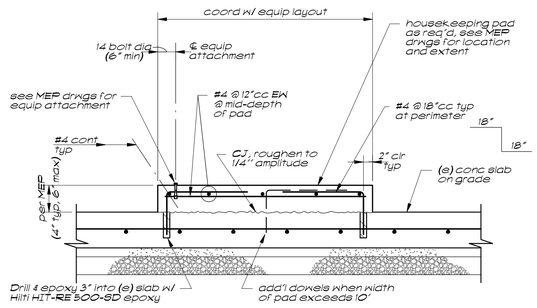

Housekeeping Pad at Slab on Grade 10 S-5.1

3105D005-16

Buehler & Buehler Structural Engineers, Inc.
600 Q Street, Suite 200, Sacramento, CA 95811
tel 916.443.0303 fax 916.443.0313

REGISTERED PROFESSIONAL ENGINEER M. TODD THORP No. 2990 Exp. 6/30/12 STRUCTURAL STATE OF CALIFORNIA

C:\Users\MelissaM\Desktop\Revit\S10-17700\S10-177_SMUD Microgrid_R2012_MAM.rvt

5/29/2012 3:40:34 PM

NO.	DATE	REVISIONS
1	5/10/11	PLAN CHECK RESPONSES
3	11/4/11	PLAN CHECK SET
4	4/6/12	ISSUE FOR REBID

PETERS engineering
2411 Alhambra Blvd, Ste. 100
Sacramento, CA 95817
Tel (916) 447-2841
www.peterseng.com
Job no.10.063
consulting mechanical and electrical engineers

SMUD
SACRAMENTO MUNICIPAL UTILITY DISTRICT

DESIGNED:	TTT
DRAWN:	TTT
APPROVED:	-
DATE:	5/29/12
SCALE:	As indicated

MICROGRID PROJECT

Details

JOB NO.

SHEET NO.

S-5.1

OF SHEETS

SECTION 15010 - GENERAL MECHANICAL REQUIREMENTS

PART 1 - GENERAL

1.1 RELATED DOCUMENTS

A. The requirements of the GENERAL CONDITIONS, SUPPLEMENTARY CONDITIONS, SPECIAL CONDITIONS and DIVISION 1 GENERAL REQUIREMENTS, apply to the work of this section.

B. This section applies to all Division 15 Mechanical Sections.

1.2 SUMMARY

A. Furnish and install all mechanical work shown on the drawings, specified herein, and as required for a complete and functional installation.

B. This section includes materials and methods applicable to the work described in all Division 15 Mechanical Sections. Specific work requirements of individual Mechanical Sections take precedence if in conflict with requirements of this Section.

1.3 RELATED SECTIONS

A. Division 3 - Concrete Work

B. Division 16 - Electrical Work

1.4 DRAWINGS AND SPECIFICATIONS

A. For purposes of clearness and legibility, drawings are essentially diagrammatic and, although size and location of equipment are drawn to scale wherever possible, the Contractor shall make use of all data in all the contract documents and shall verify this information at building site.

B. Information presented on Drawings and in the Specifications is based upon latest data available during their preparation. The Drawings and Specifications are for the assistance and guidance of the Contractor and exact locations, distances, levels, etc. will be governed by the structures and the site the contractor shall accept same with this understanding.

C. The drawings indicate required size and points of termination of pipes, and suggest proper routes to conform to structure, avoid obstructions and preserve clearances. However, it is not intended that drawings indicate all necessary offsets, and it shall be the work of the Contractor to make the installation in such a manner as to conform to structure, avoid obstruction, preserve headroom and keep openings and passageways clear.

1.5 DELIVERY, STORAGE, AND HANDLING

A. Contractor shall be responsible for installation and protection and placing of all owner furnished equipment and materials.

B. Equipment stored and installed at the job site shall be protected from dust, water or other damage. Cover all equipment stored exposed to weather.

1.6 STRUCTURAL REQUIREMENTS

A. Structural members shall not be cut or modified in any manner without specific instructions from the structural engineer.

1.7 SEISMIC RESISTANCE

A. Furnish and install all systems, units, equipment, and parts to meet or exceed current applicable requirements for seismic resistance specified by codes, regulations, or agencies having jurisdiction. Include all supports, anchors, braces, and other restraining devices required. All seismic restraints will meet Seismic Zone 3 requirements, SMACNA and are the responsibility of the contractor.

B. Design of seismic bracing will be per UBC Chapter 16.

1.8 CODES AND SAFETY ORDERS

A. All work and materials shall be in full accordance with the latest rules and regulations of the State Fire Marshall; the Safety Orders of the Division of Industrial Safety; the I.S.O. codes; the California Plumbing Code, Title 24, Part 5; the California Mechanical Code, Title 24, Part 4; the California Building Code, Title 24, Part 2, NFPA Codes, and other applicable laws and regulations. Nothing in the Drawings or Specifications shall be construed to permit work not conforming to these codes. Drawings and Specifications take precedence when work and materials called for exceed Code requirements.

1.9 INSTALLATION

A. Manufacturer's Instructions:

1. When specifications require that installation comply with manufacturer's printed instructions, obtain and distribute copies of such instructions to parties involved in the installation.
2. Perform work in accordance with manufacturer's instructions. Do not omit any preparatory step or installation procedure unless specifically modified or exempted by specifications.
3. Handle, install, connect, clean, condition and adjust products in strict accordance with such instructions and in conformity with specified requirements.
4. Should job conditions or specified requirements conflict with manufacturer's instructions, consult with the Engineer for further instructions.
5. Do not proceed with work without clear understanding.

1.10 PERMITS AND FEES

A. Obtain all permits and pay all required fees for permits and/or utility services. Inspections required during the course of construction shall be arranged as required. On completion of the work furnish the SMUDs representative with certificates of inspection.

B. Include in bid all costs for gas service including meter, regulators and service line installed by a gas utility company or a gas utility company approved contractor.

1.11 SITE CONDITIONS

A. Assume all responsibility for damage to adjoining properties; and restore property to its original condition, should damage occur as a result of the work of this section. Contractor shall thoroughly familiarize himself with all site conditions. Should utilities not shown on the drawings be found during excavations, promptly notify the SMUD for instructions as to further action. Failure to do so will make the Contractor liable for any and all damage thereto arising from his operations subsequent to discovery of such utilities not shown on plans.

1.12 PRODUCT HANDLING

A. Storage and Protection:

1. Store products off the ground in storage structures or otherwise appropriately protected from weather, deterioration, and mechanical or other damage.
2. Store extra stock or spares properly until delivered to the SMUD.
3. Maintain product protection before, during, and after product is installed. After installation, provide such covering or other protection as necessary to ensure acceptable condition at project completion.

B. SMUD-Furnished Equipment:

1. The Contractor shall be responsible for the inspection and installation, connections, and start-up of all SMUD-furnished equipment as shown. All SMUD-furnished equipment defects and warranties will be maintained and administered by SMUD. The Contractor will be responsible for warranty issues regarding installation and startup only.
2. SMUD will furnish the Mechanical Contractor with three copies of the shop drawings and operation and maintenance data for all SMUD-furnished equipment. The Mechanical Contractor shall make all necessary allowances to perform work to accept the SMUD-furnished equipment at a reasonable date.

1.13 SUBMITTALS

A. General

1. A submittal schedule shall be issued by the contractor within 15 days of award of the contract. This schedule shall allow for timely review and approval as required by the contract documents.
2. These requirements apply only to substitutions, submittals, and shop drawings.
3. The contractor shall review all submittals prior to submission to SMUD. Submittals not reviewed by the contractor will be returned to the contractor and will not be reviewed.
4. Any deviations from specified requirements shall be clearly indicated in submittals.
5. Any errors in or omissions from submittals and any consequences of these are the responsibility of the Contractor.
6. Partial or incomplete submittals may be rejected as not complying with requirements; the Contractor shall be liable for any resultant consequences.
7. Delayed submittals may be rejected as not complying with requirements. Whether accepted or rejected, delayed submittals will not be considered justification for extension of contract time or similar relief.
8. Submittals not required or permitted by the Specifications but made at the option of the Contractor, will be returned without review unless accompanied with written valid justification.
9. Submittal items improperly included with those of another category (such as a proposed substitution included with shop drawing submittal) are not valid and will be returned without review.
10. Within 35 calendar days after award of the contract, and before fabrications and installation of any material or ordering of any materials, submit for approval six (6) copies of complete submittal data on specified and proposed substituted equipment and materials. Submittals shall list all materials proposed identified with drawing symbols and specific data on equipment such as arrangements, performance curves, sizes, capacity, motor locations, and other pertinent data. Check all submittals for conformance to the requirements of the Construction Documents before forwarding to SMUD for each item. No consideration will be given to substitutions submitted past 35 day limit. The contractor shall be responsible for all quantities and errors and omissions of submittals. Furnish samples when requested.
11. Equipment and materials specified as part of the specifications and drawings are listed by the manufacturer's name. All equivalent manufacturer's are considered substitutes. The contractor is bound by all requirements for substitutes, as described below.
12. Each reviewed submittal will be marked to indicate review and directions as stated below.
13. Acceptance of a submittal does not relieve the Contractor of responsibility for omissions from the submittal or errors in the submittal.

B. Review

1. Submittals will be reviewed for general acceptability, not necessarily including all details. The engineers review is for general conformance with the design concept of the project and the information given in the contract documents. The contractor is solely responsible for confirming and correlating all quantities and dimensions; selecting fabrication processes and techniques of construction; coordinating the work with that of other trades and performing all work in a safe and satisfactory manner. Corrections of comments made on this submittal during this review do not relieve contractor from compliance with the requirements of the contract documents or with its responsibilities listed herein.
   a. Proposed substitutes will be judged not only for the acceptability of the items themselves, but also how they will be used under the conditions of the particular project.
   b. Proposed substitutions will be judged also for compliance with qualifications and conditions stipulated in paragraph 1.12.
2. Each reviewed submittal will be marked to indicate review and directions as stated below.
   a. Acceptance of a substitute does not waive the specified requirements.
   b. Once a substitution is accepted, no revision or resubmittal may be made except for pressing and valid reason and after receipts of approval to do so.

C. Review Directions

1. The notation "No Exceptions Taken" indicates that no further submittal on the particular matter is required and that the Contractor may proceed with normally ensuing action. The notation may be applied to submittals on substitutions, shop drawings, record data, or operation and maintenance data. The submittal has only been reviewed for general conformance with the design concept of the Contract Documents. The contractor is responsible for the dimensions to be confirmed and correlated at the job site; information that pertains solely to the fabrication process or to the means and methods of construction; coordination of the work of all trades; and performing all work in a safe and satisfactory manner. This notation does not modify the contractor's duty to comply with the contract documents.
2. The notation "Make Corrections Noted" indicates that no further submittal on the particular matter is required, but the Contractor shall make all changes or corrections noted (but no others) before proceeding with normally ensuing action. The notation may be applied to submittals on substitutions or shop drawings (but usually not record data or operation and maintenance data).
3. The notation "Amend and Resubmit" indicates that the submittal is not accepted and must be revised, resubmitted, and reviewed again. In the case of submittal on substitutions and shop drawings so noted, the Contractor shall not proceed with any normally ensuing action until the resubmittal is reviewed. The notation may be applied to submittals on substitutions, shop drawings, record data, or operation and maintenance data.
4. The notation "Rejected - See Remarks" indicates that the submittal is not accepted and that resubmittal on the same subject matter is not allowed and will not be considered. The notation will be applied normally only to submittals on substitutions (usually not on shop drawings, record data, or operation and maintenance data).
5. The notation "Returned Without Review" indicates that the submittal or item has not been considered officially because it is either not proper, valid, required, or permitted by the Specifications and has no status or effect.

1.14 SHOP DRAWINGS

A. The contractor is responsible for providing all shop drawings as described below so that the design professional has the opportunity to determine if the contractor understands the contract documents. It is not the purpose of shop drawings to assure that the contractor is meeting the requirements of the contract documents. Review and approval of a submittal neither extends nor alters any contractual obligation.

B. Accompany all substituted equipment with shop drawings showing revised ductwork and/or piping layouts in order to ascertain that substituted equipment does not adversely affect layout or work of others. Shop Drawings: The following conditions apply to shop drawings:

1. Shop drawings are not and do not become Contract Documents.
2. Processed shop drawing submittals and any instructions or requirements noted thereon are a part of the work, but they may not be used as a means of increasing the scope of the work.
3. If deviations, discrepancies, or conflicts between shop drawing submittals and the Contract Documents are discovered either prior to or after the submittals are processed, the Contract Document requirements shall govern.

1.15 SUBSTITUTIONS

A. Whenever any equipment, material, or process is indicated or specified by patent of proprietary name and/or name of Manufacturer, in the Specifications and/or on the Drawings, it is understood that such specification is used to facilitate the description of the material and/or process and deemed to be followed by the words "or equal" unless noted "no substitute".

B. Substitute equipment and materials shall be equal in all respects including quality, arrangement, utility, physical size, capacity, and performance to those specified. Approval of

substitute material will not relieve the contractor from complying with the requirement of the Drawings and Specifications. The contractor shall be responsible and at his own expense, for any changes caused by proposed substitutions which affect other parts of his own work or the work of other contractors.

C. The submittal of a proposed substitution shall clearly establish the following:
   1. The item can be transported into and installed in the intended space and in the manner shown.
   2. Required connections (electrical, piping, and other) can be properly made and adjoining work can be properly accomplished.
   3. The proposed substitute is similar to and of substance equal to that specified, is suited to the same use as that specified, and will perform the functions required by the design.
   4. Motors for proposed substitute equipment will have the same minimum differential between motor brake horsepower and motor nameplate horsepower as the specified equipment.
   5. All performance requirements shall be at least equal to the specified product or equipment including noise levels, cooling capacity, heating capacity, air flow quantity, etc.

D. By submitting a proposed substitution, the Contractor agrees to the following:
   1. He will assume full responsibility for any and all modifications and necessary alterations arising from the use of the substitute item or material including all cost incurred by all other trades.
   2. He will assume full responsibility for any delay in the construction schedule resulting from the use of the substitution.
   3. He will prove harmless and indemnify SMUD and the SMUD's design consultants from real or alleged damages that may result from the installation, use, or performance of a substitute material or product.

E. The following conditions apply to substitutions:
   1. Submittals of substitutions are not and do not become part of the Contract Documents.
   2. Contractor shall not order, fabricate, use, or install any substitute product or procedure unless he has received acceptance of the substitute from the Engineer.
   3. Should the Contractor install any substitute product in violation of the above he shall remove it and install the specified product at his own expense.
   4. The Contractor shall provide a letter stating that all the above items shall apply to all substituted products and equipment.
   5. Any submittal for substituted equipment or product that does not clearly show that the substituted item is equal shall be marked rejected and no further submittal shall be allowed on the substituted item. Provide in submittal format documentation that the proposed item is exactly as specified in the contract documents.

1.16 GUARANTEE

A. Guarantee all work for one year from date of acceptance, against all defects in material, equipment, and workmanship including repair of damage to any part of the premises resulting from leaks or other defects in material, equipment and workmanship. Guarantee shall be on form supplied by the SMUD's representative.

1.17 RECORD DRAWINGS

A. Indicate on reproducible drawings the actual location of all ductwork, piping and equipment as the work progresses. Dimension locations of underground service mains and branches. Deliver the drawings to SMUD at the completion of the job.

PART 2 - PRODUCTS

2.1 GENERAL REQUIREMENTS

A. Shop drawings:
   1. Make all drawings to an appropriate scale, large enough to show all pertinent aspects of

the item and the method of its connection into the work.

2. Make each drawing sheet in a reproducible form.

B. Grouping: Combine submittals in logical groupings; for example, submit Shop Drawings grouped by Sections of the Specifications, arranged in the specified sequence.

C. Shop Drawings: Four blue or black line prints of each for the Engineer.

D. Content:

1. Shop drawings may be:
   a. Drawings or diagrams prepared by the Contractor, a supplier, a manufacturer, or other.
   b. Typewritten data or descriptions.
   c. Manufacturer's printed brochures, descriptions, charts, instructions, or data sheets.

E. Timing: Submit all shop drawings prior to installation of any items included in submittal.

2.2 CORROSION PROOFING

A. Corrosion Proofing / U.V. Protection: Products which will be installed outdoors, exposed to the weather, exposed to moisture, or other potentially damaging conditions shall be constructed to resist the effects of such exposure.

B. Exterior casings shall have lapped or gasketed joints effectively sealed to prevent intrusion of moisture or other injurious substances.

C. Casings, ducts, pipes, or product items shall be constructed of materials which are fully resistant to harmful substances they may normally contact, or (if ferrous) shall be galvanized after fabrication, or shall be fully protected from such substances by paint or other coating in appropriate thickness or number of coats.

D. All bolts, nuts, screws, and washers shall be galvanized unless specified to be plated or unprotected.

E. Any exposed plastic pipe must have a U.V. inhibitor.

2.3 MATERIAL AND EQUIPMENT

A. All material and equipment shall be new, of the type, capacity and quality specified and free from defects. All materials and equipment shall be of the same brand or manufacturer throughout for each class of material or equipment wherever possible.

2.4 MOTORS AND STARTERS

A. Motors furnished as part of mechanical equipment shall be of size indicated and shall have starting torque sufficient to start and drive equipment load to which they are connected.

B. Electric motors shall be NEMA Premium efficiency, Gould "E 3Plus", or equal. Provide motors with maximum efficiency and power factor at their normal load operating point.

C. Motor enclosures shall be:

1. Open drip proof for general use.
2. Totally enclosed for wet or exterior use.
3. Explosion-proof for hazardous location use.

D. Electric Motors of ¾ HP rating and over, heavy duty, ball bearing, open (drip-proof), squirrel cage induction type, normal starting torque 60 cycle service, 40o F continuous rating, and shall conform in all respects to the latest applicable standard of NEMA and AIEE. Motors up to ¾ HP rating shall have sleeve or ball bearing. Electric motors which are not housed within equipment they serve, shall be stamped for Quiet-Operation. Motors shall be of an Energy Efficient design meeting C.E.C., Title 24.

E. Electric motors shall be NEMA Premium efficiency, induction rated for use with VFD's. Motors used with variable frequency drives must be compatible with VFD's. Motor insulation must withstand 1500v/microsecond dv/dt in accordance with NEMA MG-1, Section 4, Part 31.40.4.2.Provide motors with maximum efficiency and power factor at their normal load operating point.

F. Motor starters and contactors except those in motor control centers shall be included in the mechanical work.

G. Starters: Starters furnished integral to, or specifically for, mechanical equipment shall be Square D, General Electric, Cutler-Hammer, or equal and shall comply with the following:

1. Enclosures shall be NEMA Standard to suit location/duty:
   a. Type 1: general purpose.
   b. Type 3: rain tight.
   c. Type 4: watertight.
   d. Type 7&9: explosion proof.
2. Thermal overload protection devices shall be provided as follows:
   a. One for single-phase motors.
   b. Three for three-phase motors.
   c. One for each ungrounded conductor for each winding of multi-wound or multi-speed motors.
3. Starters for motors up to 1/2 HP may be manual type if no interlocking is required; pilot light to indicate ON position is required.
4. Starters for motors up to 30 HP shall be magnetic across-the-line type except as stipulated above.
5. Starters for motors over 30 HP shall be transition-type magnetic-reduced voltage unless specified otherwise. Coordinate the characteristics to ensure adequate starting torque and to limit the starting current to a level compatible to the electrical system and acceptable to the utility company/agency.
6. Magnetic starters shall be provided with:
   a. 120 volt control circuits.
   b. H-O-A switch in cover.
   c. Auxiliary contacts for necessary interlocking.
   d. Integral disconnect switch or circuit breakers for branch circuit, short-circuit and ground-fault protection.
7. Short-circuit interrupting capacity of starters and disconnects shall be adequate for voltage employed and for current to be interrupted. This may require use of high interrupting capacity breakers or current limiting fuses. If fuses are used, provide three spares for each disconnect.
8. Starters shall be compatible with the motor they control.

2.5 ACCESS BOXES

A. For below grade valves and piping devices

1. Christy Concrete Products Company, Brooks, with galvanized steel checker plate recessed traffic lid flush with rim of box. Lids for boxes located in areas subject to vehicular traffic shall be constructed to withstand H20 live loading as defined by the American Association of State Highway Officials (16,000 pound maximum individual wheel load). Service identification shall be conspicuously welded on lid before galvanizing. For gas service, drill twelve 3/8" diameter vent holes through lid before galvanizing. Provide manufacturer's box extensions to bring box bottom three inches below bottom of valve and box top flush with finish grade.
2. Box sizes (non traffic)

Type Valve	Valve Size	Box No.
Water	2 1/2" and smaller	B-9
Water	3" and 4"	B-16
Water	5" and 6"	B-30
Water	8"	B-36
Gas	1 1/2" and smaller	B-24
Gas	2" and 2 1/2"	B-36
Gas	3" and 4"	B-40
Gas	5" and 6"	B-48
Gas	8"	B-52

2.6 IDENTIFICATION

A. Equipment: Black Phenolic Plates engraved with ½" high white letters. The equipment shall be identified by the mechanical equipment schedule tag numbers shown on the plans (ie. AC-1, REF-1, ACCU-1). Coordinate identification numbers with electrical contractor to ensure that the disconnect switches and other electrical/mechanical equipment has consistent identification numbers.

B. Controls: Same as equipment above except ¼" high letters.

2.7 MISCELLANEOUS EQUIPMENT AND MATERIALS

A. Furnish and install miscellaneous equipment and materials required for the systems described whether or not specifically shown or specified.

PART 3 - EXECUTION

3.1 ACCESSIBILITY

A. Do not install any equipment, valve, control, motor, filter, or any other device requiring maintenance or service in an inaccessible location or position. Install access doors as specified herein to render all such equipment serviceable whether specifically shown on the plans or not. Maintain code clearance to all equipment. Coordinate location of doors with lights, etc., and locate symmetrically with same.

3.2 PREPARATION

A. Observations: Check all project drawings and specifications; report any discrepancies before proceeding with the work and in time to avoid unnecessary rework.

B. Investigation: Examine the areas, conditions, and status of other work contiguous or connecting to the work to be performed; ensure that the time of installation is coordinated with other work.

C. Interruptions of Service: Portions of this work may involve connection to existing work, facilities, or utilities ties and may require interrupting shutdowns of same. Carefully plan, coordinate and execute such work so that any interruptions will be kept to a minimum in time and occurrence. Submit request for shutdowns and make shutdowns only after receiving written approval from SMUD.

D. Other: Correct any unsatisfactory conditions that may impede proper execution of the work. Ensure that all arrangements, personnel, materials, and tools are appropriate and adequate before proceeding.

3.3 INSTALLATION

A. General:

1. Material and equipment incorporated in the work shall be used or applied only for the purpose intended or specified.
2. Install piping and ductwork and all equipment that requires access with minimum vertical and horizontal clearances required by OSHA for service.
3. All mechanical systems such as ductwork, pipes and all other equipment shall have 2 inches minimum clearance.

4. Do not proceed with work without clear understanding.

B. Manufacturer's Instructions:

1. When specifications require that installation comply with manufacturer's printed instructions, obtain and distribute copies of such instructions to parties involved in the installation.
2. Perform work in accordance with manufacturer's instructions. Do not omit any preparatory step or installation procedure unless specifically modified or exempted by specifications.
3. Handle, install, connect, clean, condition and adjust products in strict accordance with such instructions and in conformity with specified requirements.
4. Should job conditions or specified requirements conflict with manufacturer's instructions, consult with the Engineer for further instructions.
5. Do not proceed with work without clear understanding.

3.4 DEMOLITION

A. General

1. Procedures shall be determined by the contractor.
2. Demolition work shall not be commenced until all temporary work such as fences, barricades, and any required warning lights and apparatus are furnished and installed and as required by law, regulation, or ordinance, or elsewhere in this specification.
3. Demolition work shall proceed in such a manner as to minimize the spread of dust and flying particles and to provide safe working conditions for personnel.
4. Fires and explosives shall not be permitted.

B. Protection

1. Contractor shall conform to all Federal, State, and local ordinances related to the protection of the public and Contractor’s personnel and the flow of traffic/ Provide protection for persons and property throughout the progress of the work.
2. Existing work damaged by the contractor in the execution of this Contract shall be restored to former condition by the contractor to the satisfaction of the SMUD without an increase in the Contract Sum and without an extension of the Contract Time.

C. Disposition of Materials

1. All materials and equipment not scheduled to be salvaged, including debris and all rejected salvaged materials, shall become the property of the Contractor and shall be disposed of off site in a legal manner. Location of dump and length of hall shall be the contractor’s responsibility.

3.5 LOCATION OF EQUIPMENT, PIPING AND DUCT WORK

A. Where job conditions do not permit the installation of piping, ductwork, etc. in the location shown, it shall be brought to the engineer's attention immediately before fabrication of ductwork, piping, etc. and the relocation required shall be determined in a joint conference.

B. The contractor will be held responsible for the relocating of any items installed without first obtaining SMUD’s approval. Remove and relocate such items at The contractors expense as so directed by SMUD.

C. Where piping or ducting is left exposed within a room, run in vertical or horizontal planes. Maintain uniform spacing between parallel lines and/or adjacent wall, floor or ceiling surfaces.

D. Horizontal runs of plumbing and/or electrical conduit suspended from ceilings shall provide for maximum clearance.

E. Make minor changes in locations of equipment, piping, ducts, etc. from locations shown including minor offsets when directed by the engineer, at no additional cost to SMUD.

3.6 ELECTRICAL REQUIREMENTS

A. Provide working space around electrical equipment in compliance with the applicable Code and all Safety Orders.

B. Coordinate the Mechanical Work with the Electrical Work to comply with the above. Furnish and set in place all motors and duct or pipe installed controls.

C. Location of all new switches shall be verified with SMUD before roughing-in. Furnish necessary control diagrams and instruction for the proper installation of the controls.

D. Assume responsibility to insure that all motors are connected with flexible conduit per Division 16 requirements.

E. Assume responsibility for the proper supervision and testing of the controls for sequence of operation.

F. Motors and control equipment shall conform to the Standards of the National Electrical Manufacturers Association.

G. All equipment electrical characteristics shall be as noted on the drawings, or as specified. Verify before ordering any equipment.

H. Before permitting operation of any equipment which is furnished, installed or modified under this contract, review all wiring connections that pertain to mechanical equipment or work, and verify that these connections are correct.

I. Ascertain that the over-load protection devices installed are of the correct type, rating and setting to properly protect this equipment.

J. Where equipment motors are to be electrically interlocked with other equipment for simultaneous operation, utilize mechanical equipment wiring diagrams to coordinate with the electrical systems so that proper wiring of the equipment involved is affected.

K. The Mechanical contractor shall install all duct or equipment mounted smoke detectors provided under Division 16.

3.7 CARE AND CLEANING

A. Clean and adjust all equipment at completion of installation to provide operating conditions satisfactory to the engineer. Remove broken, damaged or defective parts; repair or replace as directed by engineer. Remove surface material and debris resulting from this work when directed.

3.8 EQUIPMENT AND CONTROL IDENTIFICATION

A. Identify all equipment with permanently attached plates.

B. Identify all controls and controllers except thermostats in finished areas.

3.9 FLASHINGS

A. Furnish and install a waterproof flashing for each pipe, duct, or other penetration through roof or wall. Flashings shall be 4 lb. seamless lead flashings Semco 1100 series with counter flashing as detailed, except in metal roofs flashing for pipes through roof shall be furnished by the roofing contractor. Where details are not specifically delineated, submit details for review.

3.10 PAINTING

A. Painting is included as part of this work. It shall be the responsibility of the Mechanical Contractor to properly protect all equipment and controls during painting operations and the Mechanical Contractor shall repair and/or replace any item damaged due to painting that was not properly protected.

3.11 OPERATION AND MAINTENANCE DATA

A. General: Record data and operation and maintenance data are complementary. Submittal items which may be required under both categories may be included only under one submittal if a statement to that effect is included in the other submittal.

B. Quality Assurance

1. Preparation of data shall be done by personnel
   a. Trained and experienced in maintenance and operation of described products.
   b. Familiar with requirements of this Section.

c. Skilled as technical writer to the extent required to communicate essential data.
d. Skilled as draftsman competent to prepare required drawings.

C. Form of Submittals

1. Prepare data in form of an instructional manual for use by SMUD's personnel.
   a. Cover: Identify each volume with typed or printed title, "OPERATING AND MAINTENANCE INSTRUCTION". List:
   b. Title of Project
   c. Provide indexed tabs.
   d. Identity of separate structure as applicable.
   e. Identity of general subject matter covered in the manual.
2. Format
   a. Size: 8-1/2 in. x 11 in.
   b. Paper: 20 pound minimum, white, for typed pages.
   c. Text: Manufacturer's printed data, or neatly typewritten.
   d. Drawings:
      1) Provide reinforced punched binder tab, bind in with text.
      2) Fold larger drawings to size of text pages.
   e. Provide fly-leaf for each separate product, or each piece of operating equipment.
      1) Provide typed description of product, and major component parts of equipment.
      2) Provide indexed tabs.
3. Binders
   a. Commercial quality three-ring binders with durable and cleanable plastic covers.
   b. Maximum ring size: 1 inch.
   c. When multiple binders are used, correlate the data into related consistent groupings.

D. Content of Manual

1. Neatly typewritten table of contents for each volume, arranged in systematic order.
   a. Contractor, name of responsible principal, address and telephone number.
   b. A list of each product required to be included, indexed to content of the volume.
   c. List, with each product, name, address and telephone number of:
      1) Subcontractor or installer.
      2) Maintenance contractor, as appropriate.
      3) Identify area of responsibility of each.
      4) Local source of supply for parts and replacement.
   d. Identify each product by product name and other identifying symbols as set forth in Contract Documents.
2. Product Data
   a. Include only those sheets which are pertinent to the specific product.
   b. Annotate each sheet to:
      1) Clearly identify specific product or part installed.
      2) Clearly identify data applicable to installation.
      3) Delete references to inapplicable information.
3. Drawings
   a. Supplement product data with drawings as necessary to clearly illustrate.
      1) Relations of component parts of equipment and systems.
      2) Control and flow diagrams.
   b. Coordinate drawings with information in Project Record Documents to assure correct illustration of completed installation.
   c. Do not use Project Record Documents as maintenance drawings.
4. Written text, as required to supplement product data for the particular installation.
   a. Organize in consistent format under separate headings for different procedures.
   b. Provide logical sequence of instructions for each procedure.
5. Factory Authorized Start-Up Report.
   a. Provide a factory start-up report for each piece of equipment. Contractor start-up reports, unless contractor is a factory authorized representative will not be allowed.
6. Copy of each warranty, bond and service contract issued.

a. Provide information sheet for SMUD's personnel, give:
   1) Proper procedures in event of failure.
   2) Instances which might affect validity of warranties or bonds.

E. Manual for Equipment and Systems
1. Submit three copies of complete manual in final form.
2. Content, for each unit of equipment and system, as appropriate.
   a. Description of unit and component parts.
      1) Function, normal operating characteristics, and limiting conditions.
      2) Performance curves, engineering data and tests.
      3) Complete nomenclature and commercial number of replaceable parts.
   b. Operating procedures
      1) Start-up, break-in, routing and normal operating instructions.
      2) Regulation, control, stopping, shut-down and emergency instructions.
      3) Summer and winter operating instructions.
      4) Special operating instructions.
   c. Maintenance Procedures
      1) Routing operations
      2) Guide to "trouble-shooting".
      3) Disassembly, repair and reassembly.
      4) Alignment, adjusting and checking
   d. Servicing and lubrication schedule.
      1) List of lubricants required.
   e. Manufacturer's printed operating and maintenance instructions.
   f. Description of sequence of operation by control manufacturer.
   g. Original manufacturer's parts list, illustrations, assembly drawings and diagrams required for maintenance.
      1) Predicted life of parts subject to wear.
      2) Items recommended to be stocked as spare parts.
   h. As-installed control diagrams by controls manufacturer.
   i. Each contractor's coordination drawings:
      1) As-installed color coded piping diagrams.
   j. Charts of valve tag numbers, with location and function of each valve.
   k. List of original manufacturer's spare parts, manufacturer's current prices, and recommended quantities to be maintained in storage.
   l. Other data as required under pertinent sections of specifications.
3. Content, for each electric and electronic system, as appropriate.
   a. Description of system and component parts.
      1) Function, normal operating characteristics, and limiting conditions.
      2) Performance curves, engineering data and tests.
      3) Complete nomenclature and commercial number of replaceable parts.
   b. Circuit directories of panel boards.
      1) Electrical service.
      2) Controls.
      3) Communications
   c. As-installed color coded wiring diagrams.
   d. Operating procedures:
      1) Routing and normal operating instructions.
      2) Sequences required
      3) Special operating instructions
   e. Maintenance procedures
      1) Routine operations
      2) Guide to "trouble-shooting".
      3) Disassembly, repair and reassembly.
      4) Adjustment and checking.
   f. Manufacturer's printed operating and maintenance instructions.

g. List of original manufacturer's spare parts, manufacturer's current prices, and recommended quantities to be maintained in storage.
h. Other data as required under pertinent sections of specifications.
i. Additional requirements for operating and maintenance data: Respective sections of Specifications.

F. Submittal Schedule
1. Submit two copies of preliminary draft of proposed formats and outlines of contents prior to start of work.
   a. SMUD will review draft and return one copy with comments.
2. Submit one copy of complete data in final form fifteen days prior to final inspection or acceptance.
   a. Copy will be returned after final inspection or acceptance, with comments.
3. Submit specified number of copies of approved data in final form 10 days after final inspection or acceptance.

G. Instruction of SMUD's Personnel
1. Prior to final inspection or acceptance, fully instruct SMUD's designated operating and maintenance personnel in operation, adjustment and maintenance of products, equipment and systems.
2. Operating and maintenance manual shall constitute the basis of instruction.
   a. Review contents of manual with personnel in full detail to explain all aspects of operations and maintenance.

3.12 RECORD DATA

A. Compilation
1. Record and collect information concurrently with construction progress and date all entries; make drawing entries within 24 hours after occurrence of change or installation requiring recording. Any concealed work covered before recording data shall be uncovered as directed or as necessary to obtain data.
   a. Record information on drawing prints using an erasable colored pencil (not ink or indelible pencil); describe clearly by note or graphic line as appropriate.
2. Locate any concealed work adequately to allow future access with reasonable ease and accuracy.
   a. Identify the plan location of all stub outs, pipe lines, etc., which are buried or concealed in the structure, whether installed where shown on the contract drawings or in a different location; show actual field dimensions from column lines, wall lines, or other permanent reference lines or points.
   b. In many cases on the contract drawings, the arrangement of conduits, pipes, ducts, and similar items is shown schematically rather than as a precise scaled layout. Identify the actual location of these with horizontal and vertical dimensions. If such lines are exposed or readily accessible, omit dimensional identification.
   c. When any work is installed of size, dimension, slope, or location different from that shown on the contract drawings, note the deviation on the Project Record set. If the variations are substantial or cannot be shown clearly on the record drawings, make a new drawing and attach to the Record set.
3. On other documents
   a. Where changes occur in specifications, clearly indicate same in ink, colored pencil, or rubber stamp.
   b. Where installed equipment differs from that specified (e.g., by accepted substitution or change order) note in the specifications and include complete data on same.

3.13 OPERATION AND MAINTENANCE DATA

A. Preparations: Prior to data collection and compilation, prepare and submit in duplicate an outline of the proposed organization and content.

B. Compilation: Prepare and collect data concurrently with construction progress. Compile per submitted outline.

3.14 PROJECT CONSTRUCTION REVIEW

A. A representative of Peters Engineering shall be notified by the contractor each stage of construction and before covering or enclosing work:

B. The contractor shall give such notice 48 hours prior to completion of the particular phase. The purpose of notification is so that the required review can be made without delaying construction. When notified, Peters Engineering will advise the contractor if a field review of the construction will be made in 48 hours or that a review will not be required. If the contractor fails to notify Peters Engineering as required, and/or covers or closes in any construction before required reviews, he may be required to uncover the work for observation.

END OF SECTION

SECTION 15250 - MECHANICAL INSULATION

PART 1 - GENERAL

1.1 RELATED DOCUMENTS

A. The requirements of the GENERAL CONDITIONS, SUPPLEMENTARY CONDITIONS, SPECIAL CONDITIONS and DIVISION 1 GENERAL REQUIREMENTS, apply to the work of this section.

B. Section 15010, General Mechanical Requirements applies to this section.

1.2 SUMMARY

A. This Section includes duct, pipe, and equipment insulation.

B. Related Sections:

1. Section 15010 - General Mechanical Requirements
2. Section 15400 - Plumbing
3. Section 15510 - HVAC Piping and Valves
4. Section 15800 - Heating, Ventilating, & Air Conditioning

1.3 QUALITY ASSURANCE

A. All insulation work shall be performed by a licensed firm in the insulation industry experienced in applying insulation of the type specified herein. All work shall be performed in strict accordance with manufacturer's recommended application procedures and as directed below.

B. Insulation applied to the exterior or interior surface of ducts, and the exterior surface of piping, shall be UL labeled with maximum flame-spread rating of 25 and maximum smoke-developed rating of 50 according to ASTME 84, when tested as a composite installation including insulation, facing materials, and adhesives as normally applied.

C. Title 24 requirements.

D. CMC Standard 6-1 requirements.

1.4 SUBMITTALS

A. Submit a general statement of materials and methods along with manufacturer’s technical data and installation instructions for each type of insulation system to be used. Identify what use each insulation product will be used for.

PART 2 - PRODUCTS

2.1 GENERAL

A. Thickness of insulation and type of jacket shall be as specified. Acceptable manufacturers include:

1. Owens-Corning
2. CertainTeed
3. Knauf
4. Armstrong
5. Imcoa

2.2 PIPE INSULATION MATERIALS

A. Preformed Glass-Fiber Pipe Insulation: ASTM C 547, Class 1, jacketed, with a k-value of 0.27 at 75o F mean temperature.

B. Flexible Elastomeric Cellular Pipe Insulation: ASTM C 534, Type I, closed-cell insulation with a k-value of 0.27 at 75o F mean temperature.

C. Metal Insulation Jacket:

1. Straight runs: .016" thick smooth sheet aluminum finish.
2. Irregular shapes:
   a. Mitered aluminum sheet matching straight run jacketing; or Zeston 2000 one piece

molded type fitting covers painted with two coats of aluminum weather resistant paint, suitable for painting PVC.

PART 3 - EXECUTION

3.1 GENERAL

A. Apply insulation in accordance with the manufacturer's recommendations and with instructions specified herein or noted on the drawings.

B. Fit insulation snugly to the item being insulated; butt all joints tightly with no voids, spaces, or thin spots.

C. Use adhesives, mastics, cements, sealants, and finishes undiluted unless specifically directed otherwise; apply per manufacturer's directions.

D. Install outdoor jacketing or other specified weather proofing or finishing on all insulation outdoors.

E. Install all indoor exposed insulation with extra care and finish neatly.

F. Install vapor barriers on insulated pipes with surface operating temperatures below 60o F.

G. Insulate fittings, valves, and specialties.

H. Seal vapor-barrier penetrations for hangers, supports, anchors, and other projections.

I. Seal ends of flexible elastomeric cellular insulation with adhesive.

J. Flexible Elastomeric Insulation Installation: Seal joints with adhesive.

K. Roof Penetrations: Apply insulation for interior applications to a point even with the top of the roof flashing.

L. Interior Walls and Partitions Penetrations: Apply insulation continuously through walls and partitions, except fire-rated walls and partitions.

M. Fire-Rated Walls and Partitions Penetrations: Terminate insulation at penetrations through fire-rated walls and partitions. Seal around penetration with firestopping material bearing the UL classification marking appropriate for the specific application.

N. Floor Penetrations: Terminate insulation at the underside of the floor assembly and at the floor support at top of floor. Seal around penetration with firestopping material bearing the UL classification marking appropriate for the specific application.

O. Install insulation in accordance with the manufacturer’s installation instructions and as specified herein or noted on the drawings.

P. Install insulation after systems, items, and equipment have been installed, tested, inspected and accepted.

Q. Insulate ducts, pipes, and equipment installed tight against other work before hanging or setting in place.

3.2 EQUIPMENT INSULATION

A. Equipment: Insulated with rigid fiberglass sheet, 2” thickness, with jacket material shall be fiberglass Fab-cloth with #10 mesh and Childer’s CP-10 or CP-11 coating when exposed in equipment rooms.

3.3 PIPE INSULATION

A. The term “piping” used herein shall include all pipe fittings, flanges, valves, and pipe terminations, unless otherwise noted. Apply insulating cement to fittings, valves, and strainers, and trowel smooth to the thickness of adjacent insulation . Extend covering on valves up to the bonnet. Leave strainer cleanout plugs accessible. Valves and fittings covers may be PVC, Zeston 2000, or equal.

B. Coat glass-fiber pipe insulation ends with vapor-barrier coating.

C. Glass-Fiber Insulation Installation: Bond insulation to pipe with adhesive. Seal seams and joints with vapor-barrier compound.

D. Exterior Wall Penetrations: For penetrations of below-grade exterior walls, terminate insulation flush with mechanical sleeve seal.

E. Do not apply insulation to the following systems, materials, and equipment unless otherwise indicated:

1. Flexible connectors.
2. Fire-protection piping systems.
3. Sanitary drainage and vent piping.
4. Drainage piping located in crawl spaces, unless otherwise indicated.
5. Below-grade piping.
6. Chrome-plated pipes and fittings, except for plumbing fixtures for the disabled.
7. Piping specialties, including air chambers, unions, strainers, check valves, plug valves, and flow regulators.

F. Applications:

1. Industrial Cold Water Piping:
   a. 1” thickness for pipe size 2” and smaller
   b. 1½” thickness for pipe size 2½” and larger.
   c. Provide jacket material shall be fiberglass Fab-cloth with #10 mesh and Childer’s CP-10 or CP-11 coating in mechanical rooms, as an alternate use 20 mil PVC jacketing system.
2. Heating Hot Water Supply and Return Piping: Molded fiberglass pipe insulation, 1½” thickness, heavy density, factory applied lapped all service vapor retarder jacket with pressure sensitive adhesive seals.
   a. Provide jacket material shall be fiberglass Fab-cloth with #10 mesh and Childer’s CP-10 or CP-11 coating where exposed and in mechanical rooms, as an alternate use a 20 mil PVC jacketing system, fitting covers over insulation on all fittings and pipe mounted devices.
   b. On all piping (except equipment face piping) installed outdoors, install outdoor jacketing. Install aluminum sheet jacket with all joints turned down at 45 degrees below horizontal; secure in place with non-corroding bands and/or blind rivets (do not puncture vapor barrier insulation jacket). On equipment face piping (including equipment shut-off valve) coat the insulation with 1/4" thick Fosters 60-25 C.I. (weather proofing) mastic reinforced with glass fabric and finished with two (2) coats of aluminum paint.
   c. Hot water piping within 10 feet of boiler shall be insulated with 2" of heavy density fiberglass insulation and covered with aluminum jacket.
3. Chilled Water Supply and Return Piping: Molded fiberglass pipe insulation, 1” thickness, heavy density, factory applied lapped all service vapor retarder jacket with pressure sensitive adhesive seals.
   d. Provide jacket material shall be fiberglass Fab-cloth with #10 mesh and Childer’s CP-10 or CP-11 coating where exposed and in mechanical rooms, as an alternate use a 20 mil PVC jacketing system, fitting covers over insulation on all fittings and pipe mounted devices.
   e. On all piping (except equipment face piping) installed outdoors, install outdoor jacketing. Install .016" aluminum sheet jacket with all joints turned down at 45 degrees below horizontal; secure in place with non-corroding bands and/or blind rivets (do not puncture vapor barrier insulation jacket). On equipment face piping (including equipment shut-off valve) coat the insulation with 1/4" thick Fosters 60-25 C.I. (weather proofing) mastic reinforced with glass fabric and finished with two (2) coats of aluminum paint.
4. Condenser Water Piping: No insulation required.
   a. On all piping (except equipment face piping) installed outdoors, install outdoor jacketing. Install aluminum sheet jacket with all joints turned down at 45 degrees

below horizontal; secure in place with non-corroding bands and/or blind rivets (do not puncture vapor barrier insulation jacket). On equipment face piping (including equipment shut-off valve) coat the insulation with ¼" thick Fosters 60-25 C.I. (weather proofing) mastic reinforced with glass fabric and finished with two (2) coats of aluminum paint.

G. Butt all insulation joints and seal with pressure sensitive tape matching the jacket.

H. Install insulation in removable sections over unions, flanges, and line components or devices requiring periodic maintenance.

I. Install insulation butted tightly to transitions such as insulated pipe shields, insulated pipe sleeves, equipment connections, etc.

J. Install insulation on all chilled water piping systems so that condensation will not occur. Insulate all chilled water pipe supports up to the point of connection to the building structure.

K. Treat equipment face piping as follows:

1. Where piping is subject to condensation (chilled water systems, domestic water systems, rain water leaders, condensate drains) and where installed above grade outdoors (either hot or cold systems) insulate piping completely to the point of equipment connection.
2. Where not subject to condensation (hot systems) terminate insulation at the outlet side of the equipment shut-off valve, leaving the face piping un-insulated, 24" max, unless noted otherwise, except where exposed to outdoors.

3.4 EQUIPMENT INSULATION

A. All equipment such as pump bodies, heat exchangers, expansion tanks, air eliminators, storage tanks, etc., shall be completely insulated.

3.5 FINISHING

A. Finishes and Protection:

1. Insure that the exterior finish of all insulation is applied and complete as required, ready for painting.
2. Install all required metal jackets or protective sheathing.

END OF SECTION

PART 1 - GENERAL

1.1 RELATED DOCUMENTS

A. The requirements of the GENERAL CONDITIONS, SUPPLEMENTARY CONDITIONS, SPECIAL CONDITIONS and DIVISION 1 GENERAL REQUIREMENTS, apply to the work of this section.

B. Section 15010, General Mechanical Requirements applies to this section.

1.2 SUMMARY

A. This section includes all plumbing (equipment, fixtures, pipe and fittings, specialties) inside the building(s) and outside the building(s) to the point of connection to site plumbing systems.

B. Provide complete plumbing systems including:

C. Service connections to existing on-site utilities, and stubs for future connection to equipment provided under the work of this Section or other Sections of the Specifications.

D. All piping systems for conduction of cold water, heated water, soil, waste, fuel gas, and other fluids or gases as shown or specified for plumbing work.

E. All valves, piping supports, piping penetration auxiliaries, piping protective coverings, piping, and other piping accessories as shown or specified for plumbing work.

F. All plumbing equipment and auxiliary items as specified herein or shown on the drawings.

1.3 RELATED SECTIONS

A. Section 15010 - General Mechanical Requirements

B. Section 15250 - Mechanical Insulation

1.4 QUALITY ASSURANCE

A. All plumbing fixtures and equipment shall comply with California Code of Regulations, Title 24, Part 6, latest edition.

1.5 REFERENCES

A. Pipes And Tubes

1. Hard Copper Tube: ASTM B88, Types K, L and M, water tube, drawn temper.
2. Soft Copper Tube: ASTM B88, Types K and L, water tube, annealed temper.
3. Steel Pipe: ASTM A53, Type S, Grade A, Schedule 40, black or galvanized, plain ends.
4. Copper Drainage Tube: ASTM B306, Type DWV, drawn temper.
5. Hubless, Cast-Iron Soil Pipe: CISPI 301.

B. Fittings:

1. Wrought-Copper, Solder-Joint Pressure Fittings: ANSI B16.22.
2. Cast-Copper-Alloy, Solder-Joint Pressure Fittings: ASME B16.18, ASTM B584.
3. Cast-Copper-Alloy, Threaded -Joint Pressure Fittings: ANSI/ASME B16.15, ASTM B584.
4. Bronze Flanges: ASME B16.24, Classes 150 and 300.
5. Copper Unions: ASME B16.18, cast-copper-alloy body, hexagonal stock, with ball-and-socket joint, metal-to-metal seating surfaces, and solder-joint, threaded, or solder-joint and threaded ends. Threads complying with ASME B1.20.1.
6. Steel Pipe Nipples: ASTM A733, made of ASTM A53 or ASTM A106, Schedule 40, seamless, galvanized, carbon-steel pipe.
7. Malleable-Iron Unions: ASME B16.39, Classes 150 and 300; hexagonal stock; with ball-and-socket joint; metal-to-metal bronze seating surfaces; and female threaded ends with threads complying with ASME B1.20.1.
8. Galvanized, Cast-Iron Threaded Fittings: ASME B16.4, Classes 125 and 250; standard pattern; with threads complying with ASME B1.20.1.
9. Wrought-Copper, Solder-Joint, DWV Drainage Fittings: ASME B16.29.
10. Cast-Copper-Alloy, Solder-Joint, DWV Drainage Fittings: ASME B16.23.

C. Joining Materials

1. CISPI Couplings for Hubless, Cast-Iron Soil Pipe and Fittings: CISPI 310, having ASTM C564 neoprene sealing sleeve, with 300 series stainless-steel, corrugated shield-and-clamp assembly.
2. Solder Filler Metal: ASTM B32, alloys to suit system requirements.
3. Brazing Filler Metals: AWS A5.8, alloys to suit system requirements.

D. Welding Filler Metals: Comply with AWS D10.12 for welding materials appropriate for wall thickness and chemical analysis of steel pipe being welded.

1.6 STRUCTURAL REQUIREMENTS

A. Structural members shall not be cut or modified in any manner without specific instructions from the structural engineer.

1.7 SUBMITTALS

A. Submit a general statement of materials and methods along with manufacturer's technical data and installation instructions for all equipment, fixtures, pipe and fittings, and plumbing specialties to be installed.

B. Record Drawings: Per specification section 15010 requirements.

C. Operation and Maintenance Manuals: Per specification section 15010 requirements.

PART 2 - PRODUCTS

2.1 GENERAL

A. Adapters: Wrought copper male adapters shall be used wherever it is necessary to connect copper tubing to a valve or "tee" having threaded connections.

2.2 PIPE, FITTING, AND JOINING MATERIALS

A. Hubless Cast-Iron/Sleeve-Clamped Joints

1. Pipe: Service weight cast iron, hubless, with hot coal tar pitch coating inside and outside, per Cast-Iron Soil Pipe Institute Standard 301.
2. Fittings: Hubless type, Tyler No-Hub Coupling, each matched with pipe and identified with the manufacturer's name or trademark, the Cast-Iron Soil Pipe Institute symbol, and the pipe size. Those for connections to other types of piping - approved cast-iron adapter/transition type.
3. Joining Materials/Methods: Husky Series 4000 (Blue shield) or Mission HeavyWieght Orange shield) on pipes over 3", neoprene sleeve type conforming to ASTM C564 specifically designed for connecting hubless cast-iron pipe, coated with manufacturer's recommended lubricant before installing; four type 304 stainless steel band clamps with a type 305 stainless steel worm drive screw, and corrugated shield over sleeve; use standard no-hub couplings on pipe 3" and less
4. Wedge lock joints at rainwater leaders to underground drain.
5. Cleanout Plugs: Use Armite Joint Seal compound No. 411, or Enterprise Commercial Thread-Seal.

B. Steel/Cast-Iron Threaded Drainage Fittings

1. Pipe: Galvanized steel per ASTM A-120, threaded ends, standard weight Schedule 40.
2. Fittings: Cast-iron threaded drainage type, black coated, with recessed shoulder and pitched threads, per ASTM A-126, Class B.

C. Copper Water Pipe

1. Pipe: Above grade, Type M, L, or K hard drawn copper tubing per ASTM B-88, plain ends.
2. Fittings: Solder type, wrought copper per ANSI Standard B16.22 or cast red bronze per ANSI Standard B16.18. Do not use T-drill.
3. Unions: Solder type, cast red bronze.
4. Joining Materials/Methods

a. Canfield, Silvabrite or equal lead free solder with a non-corrosive water based flux.
b. 15% silver brazing alloy, water based silver brazing flux. Silver content must be clearly identified on the brazing rod.

5. Connections
   a. Copper to dissimilar metals: dielectric connector.
   b. Copper to threaded connections: cast brass adapters.

D. Steel/Threaded Fittings
1. Pipe: Black or galvanized steel per ASTM A-53 seamless, threaded ends, standard weight Schedule 40 or Schedule 80.
2. Fittings
   a. Black or galvanized (to match pipe) banded malleable iron, threaded, ASTM A-197, 150 lb. standard or 300 lb. extra heavy per ANSI Standard B16.3 (to match pipe schedule).
   b. Black or galvanized (to match pipe) banded cast iron, threaded, per ASTM A-126 Class B, 125 lb. standard or 250 lb. extra heavy per ANSI Standard B16.4 (to match pipe schedule).
3. Unions: AAR 300 lb. malleable iron, black or galvanized (to match pipe).
4. Joining Materials/Methods
   a. Rectorseal or pure lead and graphite thread lubricant.
   b. Permacel, P-412 1/2" wide teflon pipe joint sealant.

E. Steel/Welding Fittings
1. Fittings: Black steel, permanently marked, seamless butt welding type, standard weight or extra strong (to match pipe schedule). Optional in lieu of tees where main is at least two pipe sizes larger than branch Bonney Forge, Threadolets for ½” to 2”, weldolets for branch lines 2-1/2" to 4”; fitting shall suit main size.
2. Unions: AAR 300 lb. malleable iron, black or galvanized (to match pipe).
3. Joining Materials/Methods
   a. Gas or electric arc welding per ASME Code for pressure piping.

2.3 PIPE AND FITTING APPLICATIONS

A. Inside Building (to 5'-0" outside building line).
1. Soil, waste and vent piping
   a. Below slab, service weight cast iron soil pipe and fittings, asphaltic coated for sizes 2 1/2" and smaller. Above floor from 6" above slab shall be galvanized steel pipe or service weight cast iron soil pipe and fittings, asphaltic coated for sizes 2 1/2" and smaller. Urinal waste shall be service weight cast iron soil pipe and fittings, asphaltic coated. Sizes 3" and larger shall be service weight cast iron soil pipe and fittings, asphaltic coated.
   b. Fittings
      1) Contractor may use "No-Hub" "Husky" joints per manufacturers published instructions for installation. No-Hub fittings for waste and soil pipe shall be four band stainless steel type. Standard two band stainless steel band type may be used for vent piping.
   c. As an alternate use, copper DWV Pipe.
2. Rainwater Leaders: Same as waste and vent piping.
3. Water Piping: Above grade, Type L drawn temper, joining methods, soldered connections, below grade, Type K drawn temper copper tubing, joining methods, brazed connections.
4. Gas Piping: Schedule 40, black steel pipe; malleable iron screwed fittings for sizes 2” and smaller. Weld sizes 2-1/2” and larger. Weld all below grade piping and protect as specified herein.
5. Compressed Air Piping: Type K, drawn temper copper tube. Joining methods, brazed connection.

B. Outside Building (from 5'-0" outside building line)

1. Sewers: Sanitary pipe shall be cast iron pipe and fittings.
2. Soil, waste and vent piping
   a. Service weight cast iron soil pipe and fittings, asphaltic coated for sizes 2 1/2" and smaller. Above floor from 6" above slab shall be galvanized steel pipe or service weight cast iron soil pipe and fittings, asphaltic coated for sizes 2 1/2" and smaller. Urinal waste shall be service weight cast iron soil pipe and fittings, asphaltic coated. Sizes 3" and larger shall be service weight cast iron soil pipe and fittings, asphaltic coated.
   b. Fittings
      1) Contractor may use "No-Hub" "Husky" joints per manufacturers published instructions for installation. No-Hub fittings for waste and soil pipe shall be four band stainless steel type. Standard two band stainless steel band type may be used for vent piping.
   c. As an alternate use, copper DWV Pipe.
3. Gas piping:
   a. Above grade and to 30" below grade, shall be Schedule 40, black steel pipe with 150 lb. malleable iron, welded joints.
   b. Below grade pipe shall be protected with X-Tru-Coat and fittings covered with X-Tru-Coat, heat shrink, sleeves to 6” above grade. Above grade sizes 2" and smaller may be screwed joints.
4. Industrial Cold Water:
   a. Above grade, Type L drawn temper, joining methods, soldered connections, below grade, Type K drawn temper copper tubing, joining methods, brazed connections.

2.4 PIPE PROTECTION

A. Bare galvanized or black steel pipe buried in the ground shall have a corrosion protective wrap of one of the following:
   1. Polyvinyl Chloride Tape:The tape shall be of a minimum thickness of 10 mils and shall be laminated with a suitable adhesive, or shall be applied with a suitable primer adhesive. Width as recommended by the manufacturer for the pipe sizes being wrapped (4" minimum). Tape shall have continuous identification
   2. 3M X-Tru-Coat, factory-applied plastic coating with additional field-applied double-layer wrapping of Scotchrap #51, 20-mil plastic tape, Trentex No. V-10, B-20, Scotchwrap No. 50 Polyvinyl chloride tape wrap, or thermofit sleeves.
   3. Field Joint Cover: Tape coat, prime coat and one layer of Tape coat #20 heat-applied 62-mil tape.

B. Provide a sacrificial anode for the underground portion of all steel piping when required by the local authority.

2.5 VALVES

A. General
   1. Furnish two tee handle operators for each size to suit all valves which are installed below grade in access boxes and which are not fitted with integral handles; hub end valves shall be used where required.
   2. Valves on systems operating over 100 psi shall be rated for 150 lb. or higher as required.
   3. Shut-off service, domestic water
   4. Ball Valves:
      a. Sizes 3” and smaller: Nibco 585, 400 psi rated, threaded or sweat ends, full port, teflon seat, quarter turn handle with stops, two piece bronze body.

B. Shut-off service, natural gas
   1. Sizes 2" and smaller: NibcoT-585-70-UL, full port ball valve; 400 psi gas service rating; bronze body and ball, teflon seat, quarter turn handle with stops, swing-out accessibility/removal.
   2. Sizes 2 1/2" to 4": DeZurik Fig. 425, 175 psi shut-off pressure differential; semi-steel body, threaded ends, eccentric plug with RS-49 facing, Fig. 483 lever handle.

C. Check Valves

1. Swing check, Class 125 Buna-N Disc, Nibco or equal.
   a. Sizes 2" and smaller: Fig. T-413; bronze body, threaded ends, plug type bonnet.
   b. Size 2-1/2 and larger: Fig.F-968; iron body brass mounted, flanged ends, bolted bonnet.

2.6 PIPING ACCESSORIES

A. Unions shall have the same pressure rating as pipe fittings.

B. Strainers

1. Watts, Armstrong, Sarco, Arco, Sizes 4” and smaller, Watts Series 777, 400 psi WOG bronze body, threaded or soldered ends, 20 mesh stainless steel screen (up to 2 ½”), 3/64” perforated stainless steel screen (3”), 1/8” perforated stainless steel screen (4”), solid threaded screen retainer cap with gasket.

C. Cleanouts: Model Numbers are Josam.

1. Vertical: #58600-PLG with polished bronze cover.
2. Floor: #57000-X with nickel-bronze cover, #57000-14, with carpet clean out marker in carpeted areas.
3. Grade: #55000, C.I. with ABS plug and cast iron lid set in concrete.
4. Use floor clean outs where located in walks.

D. Reduced Pressure Back Flow Preventers

1. ¾” to 2”, Watts Series 909, provide bronze strainer, resilient seated full port bronze ball valves, air gap fitting and drain line, replaceable bronze seats.
2. 2 ½” to 10”, Watts Series 909, provide bronze strainer, non-rising stem resilient seated gate valve shut-offs, air gap fitting and drain line, replaceable bronze seats.

E. Water Pressure Reducing Valves

1. ¾” to 3”, Watts Series 223, provide y-strainer, replaceable stainless steel seat, bronze body construction, water tight sealed cage assembly, removable disc holder, low pressure model adjustable from 10-35 psi., high pressure model adjustable from 50 to 145 psi (1/2” to 1”), 50 to 120 psi (1 ¼”), and 50 to 95 (1 ½” to 3”).

F. Natural Gas Pressure Reducing Regulator

1. 2”, Fisher Regulators S200 Series with internal relief, or equal with Cast Iron body, national pipe thread connections, with 14 – 30 inches w.c. outlet pressure, 3/8 inch orifice, standard (Position 3) body position, Position F (standard) vent position. Set to 20 inches discharge pressure rated for 4850 SCFH capacity.

G. Piping Penetration Auxiliaries

1. Sleeves Below Slab or Grade: Metraseal model MS or equal with schedule 80 PVC sleeve. The seal shall be capable of withstanding a hydrostatic pressure of 20 psig. The seal shall be constructed of synthetic rubber with heavy-duty plastic pressure plates. All bolts and nuts shall be constructed of stainless steel.
2. Escutcheons: Polished chrome plated brass or painted metal.

2.7 HANGERS AND SUPPORTS

A. B-Line, Superstrut, Grinnell, or equal. Numbers are B-line.

B. Finish: Electro-Chromate or hot dipped galvanized.

C. Individual: B3690, B3100 cleaves or B3110 with H-104 all thread rod. Use B3110 for pipe subject to movement.

D. Trapeze Suspension, for three or more pipes B-Line 1-5/8" width channel or a size suitable for load in accordance with manufacturer's published load ratings. No deflection to exceed 1/180 of a span.

E. Trapeze Supporting Rods: Diameter sufficient to support the load with a safety factor of 5. Anchor rods securely to building structure. See part three for minimum sizes.

F. Pipe Straps: B2007-B2072 for standard pipe, B2000-B2069, copper coated for copper.

G. Size: For insulated pipe - B3690 pipe hangers sized to allow pipe insulation to pass continuously through the hanger.

H. Insulated Pipe Shields: Utilize isolated pipe supports at all insulated pipe hanger locations.

I. Isolators: 319CT or Trisolator isolators at all hangers and clamps supporting un-insulated piping and tubing and at all points that pipe comes in contact with structure or other pipes.

PART 3 - EXECUTION

3.1 EQUIPMENT

A. Install equipment in accordance with the manufacturer's installation instructions, as specified herein, and as detailed on the drawings.

3.2 PIPING

A. Provide trenching and backfill for buried piping and install with the following minimum cover unless shown otherwise, cover is from top of pipe to finish grade.

1. Water - 30"
2. Sewer - 30"

B. Water piping

1. On buried lines larger than 2 1/2" size, install concrete thrust blocks between pipe and undisturbed soil of trench wall at each change in direction (tees and ells) for lateral support.
2. Where laid in same trench with sewer line, install on trench shelf at least 12" above top of sewer pipe.
3. Where subject to freezing conditions water pipe shall be buried at least 30 inches deep or deeper to protect the water from freezing.
4. Run water piping generally level. No piping shall be installed to cause an unusual noise from the flow of water under normal conditions.
5. All water branches as single fixtures shall be provided with air chambers at least 12" long and of the same diameter pipe as the branches. Where two or more fixtures are located in a row or battery, the supply heads shall be continued full-size of the branch outlet and an air chamber same pipe size as the header and a minimum of 24" long shall be installed on the end of the header.
6. Adapters: Wrought copper male adapters shall be used wherever it is necessary to connect copper tubing to a valve or tee having threaded connections.
7. Install Bare Metal Pipe Isolators: Stoneman "Trisolator", Superstrut "Cush-a-strip", Unistrut on all hot and cold domestic water piping.

C. Sewer Piping: Run all horizontal sanitary piping inside of the building at a uniform grade of not less than ¼" per foot unless otherwise noted on the drawings. Sewers shall have invert elevations as shown and slope uniformly between given elevations. All drainage piping shall be run as straight as possible and shall have long radius bends. All offsets shall be made at an angle of 45 degrees or less. All vent piping shall be graded so as to free itself quickly of any water or condensation. Where possible, groups of vent risers shall be jointed together with one enlarged outlet through roof.

1. Install clean-outs of the same diameter of pipe in all horizontal soil and waste lines where indicated and at all points of change in direction and at base of all soil or waste drops. Locate-clean outs not less than 18" from building construction so as to provide sufficient space for rodding. No horizontal runs of more than 100 feet shall be without clean-out.
2. Clean-outs in floors shall be protected with a cover taped in place and removed at completion of concrete work.
3. Provide trap at each inlet to sanitary sewer system. Provide trap primers where shown and as required by code.

D. Gas Piping: Install generally level with as few bends as possible. Install dirt legs and shut-off valves at each piece of equipment. Support as specified and in accordance with the C.P.C.

3.3 VALVES, UNIONS AND FLANGES

A. Valves shall be full size of line in which installed. Furnish discs suitable for service intended. All valves shall be properly packed and lubricated. Unions shall be placed adjacent to each threaded or soldered valve or equipment connection 2" and smaller. Install flanges at all valves with stems vertical wherever possible. Stems shall not be placed below horizontal.

B. Install unions adjacent to each valve and at final connection to each piece of equipment.

C. All shutoff valves in water lines shall be or ball valves, unless otherwise shown.

D. Valves shall be provided with brass identification tags indicating service controlled. Tags may be omitted on lines exposed in equipment rooms where service is obvious.

E. Exterior hose bibbs shall be installed at 18” above finished grade and be non-freeze type.

3.4 INSTALLATION OF PIPING SYSTEMS

A. General

1. Anchor pipe subject to expansion or contraction in a manner permitting strains to be evenly distributed and alleviated by swing joints or expansion loops which shall be installed as required and/or shown. Underground anchors shall consist of plates welded to pipe and encased in concrete. Anchor all domestic cold water piping at all toilet areas that have flush valve urinals or toilets.

B. Thrust Blocks: Provide concrete anchors or thrust blocks for all non-metallic water mains in the ground. Install at all changes in direction and at branch take-offs 2" and larger. Form Thrust Blocks by pouring concrete between the pipes and trench wall. They shall be adequate in size and placed to take all thrusts created by the maximum internal water pressure, as recommended by manufacturer.

C. Sleeves: Install sleeves of sufficient size to allow for free motion of pipe. Finish sleeves flush when in walls and extend a minimum of 2" above floor when passing through floor slabs and outside walls shall be caulked with oakum and mastic and made watertight. No visible leakage at sleeves will be permitted. Sleeves may be omitted for waste lines through slabs on grade and rising into a concealed space if wrapped with 1" insulation. Sleeve all pipes where pipes pass through footings with PVC pipe sleeves.

D. Fire-Barrier Penetrations: Seal pipe penetrations with firestopping sealant material specified in Division 7.

E. Cathodic Protection: Install insulated flanges or dielectric unions at points of connection between pipes and equipment as follows: (1) between copper or brass piping and steel or cast iron pipe. (2) Between copper or brass piping and any steel material. (3) Buried connections of copper or brass piping to steel or cast iron piping shall be protected with a polyvinyl tape wrap 10 mils thick, extending 5' each way from connection.

F. Expansion: Install piping with sufficient offsets, loops, and/or swing joints to allow for expansion and contraction. Anchor piping at equipment to restrain movement at those locations.

G. Freeze Protection: Piping shall not be installed in a location subject to freezing conditions. All piping shall and must be installed on the “warm” side of building envelope insulation without exception. Where risers occur in outside walls, ensure that building insulation is adequate and intact. All piping must be drainable. Provide drains required and all piping shall be run in or above heated portion of the building.

3.5 INSTALLATION OF UNDERGROUND PIPE PROTECTION

A. Apply covering to within four inches of ends for each pipe length on pre-wrapped pipe.

B. Clean all piping of all loose scale, rust, dirt, oil and grease before wrapping. Wire brush as required, use of a quality solvent for removal of oil and grease.

C. Field Joints and Fittings: Joints shall be wrapped to provide at least two full thickness’

over the joint and to extend a minimum of 4" over the adjacent pipe covering. Tightly apply the tapes with a one-half minimum uniform lap, free from wrinkles and voids. Experienced operators shall wrap sections of piping to be wrapped that exceed 50' of continuous lengths with an approved wrapping machine.

D. Piping Protective Covering Testing. After applying covering, and before back filling. Test all protective covering using a Tinker and Rasor Holiday Detector, obtain certification upon completion of test. Correct any discovered faults in coating and repeat test until system is proved free of all faults.

E. Inspection: Damaged or defective wraps shall be repaired as directed. Do not cover wrapped pipe until the inspection and necessary repairs have been completed and approved by SMUD.

F. Defect Repair: Tape coat TC Cold prime and double wrap of Tape coat CT cold-applied tape spirally wrapped with half-tape width overlap of preceding layer.

G. Covering: Place all backfill carefully in order not to damage the wrap. No rocks or sharp edges shall be back filled against the wrap.

3.6 HANGERS AND SUPPORTS

A. General: Support all piping so that it is firmly held in place by approved iron hangers and supports and special hangers as required or as scheduled on the drawings.

1. Rigidly fasten hose faucets, and similar items at ends of pipe branches to the building construction near point of connection.
2. The engineer before installation shall approve all hanger material.

B. Hanger Installation: On all insulated pipes, install the hangers on the outside of the pipe covering and not in contact with the pipe. Burning, welding, cutting, or drilling on any structural member may only be done if approved by the structural engineer. No valve or piece of equipment shall be used to support the weight of any pipe. Provide a hanger close to the point of change of direction of pipe run in either horizontal or vertical plane. Place supports and hangers for cast iron soil pipe as close as possible to joints; when hangers or supports do not come within one foot of a branch line fitting, install an additional hanger or support at the fitting. Protect insulation, when pipe is insulated, at each hanger with 180 degree, 18 gauge, 12 inch long G.I. Saddles.

C. Hanger rods with C-clamp type structural attachment shall be equipped with retaining straps.

D. Hanger Spacing Schedule:

Type of Pipe	Spacing		
Pipe Size	½" – 2"	2 ½" – 5"	6" – 8"
Steel Pipe	*8' - 0"	10' - 0"	12' - 0"
Copper Tubing	5' - 0"	8' – 0"	10' – 0"
Cast Iron	Support at 8'- 0" intervals and on each side of and within 12" of joint.		
Rod Size:	3/8"	½"	5/8"

*1/2" gas piping shall be spaced 6' – 0" maximum

3.7 EXCAVATING AND TRENCHING

A. Perform all excavations as required for the installation of the work included under this section, including shoring of earth banks to prevent cave-ins and to protect workmen and equipment. Restore all surfaces, roadways, walks, curb, walls, existing underground installations, etc. damaged or cut as a result of the excavations to their original conditions in a manner approved by SMUD. Excavations shall be ample in size to permit pipes or equipment to be laid at elevations intended, and to permit ample space for caulking and joining and compacting backfill around pipe. Maintain all warning signs, barricades, flares and red signal lanterns as required by the Safety Orders of the Division of Industrial Safety and local ordinances. Perform all pumping required to remove all water from trenches during

installation of piping and backfilling.

B. Stop machine excavation for pipe trenches in solid ground, several inches above required grade, so that a firm and uniform bearing throughout entire length of pipe is provided. In lieu of above hand excavation on bottom of trench, the contractor may excavate to a depth one quarter of the nominal diameter of pipe, but in no case excavate less than 6" below required grade line, and place a bed of sand or granular soil, properly compacted to provide a uniform grade and to provide a firm support for pipe throughout its entire length. When pipe or underground conduit with insulation or protective coating is to be placed in the trench, clean sand only shall be used for bedding the pipe or conduit.

3.8 BACKFILLING

A. No backfilling operations shall begin until the required tests and inspections have been made and approval for backfilling has been given by SMUD. Should any of the work be enclosed or covered up before it has been approved, contractor shall, at his expenses, uncover the work. After it has been inspected, tested and approved, he shall make all repairs necessary to restore the work of the other contractor to the condition in which it was found at the time of uncovering. Insulated pipe and pipe with protective coating shall be backfilled with clean, concrete grade sand for a minimum distance of 12" above the top of the pipe. Compact sand backfill by flooding or jetting. Protect pipe from uplift during jetting operation.

B. Except under existing paved areas, walks, roads, or similar surfaces, and in cases where rock is encountered, backfill more than 12" above the top of the pipe shall be made using suitable excavated material or other approved material as necessary. The backfill shall be placed in 6" layers, measured before compaction, and tamped either by hand or machine.

C. Machine tamping of backfill for excavations under existing or proposed pavement, walks, roads or similar surfaces, and under new slabs on grade, shall be made to a minimum density of 95% of a maximum dry density as established by ASTM D 1557 or AASHTO T 180. Backfill for excavation under pavement, slabs, walks, roads and similar surfaces shall be compacted to a minimum density of 95% of a maximum dry density as established by ASTM D 1557 or AASHTO T 180. Surface work shall be replaced to match the existing work. Replace or repair to its original condition all sod, concrete, or other materials disturbed by the trenching or backfilling operation. Remove and dispose of all excess material.

3.9 CROSSING EXISTING UTILITIES

A. Extreme care shall be exercised during excavation across existing utility lines particularly gas and electrical lines for trenching to install new utility lines. Hand excavate all trenches in the proximity of existing lines so as not to damage or cut into them.

B. All existing utility and service lines shall be located by hand excavation prior to trenching with equipment.

C. The location, depth and invert elevations of all existing utilities to be crossed or to which connecting shall be determined before performing any other work or ordering any materials for the project.

3.10 PROTECTION FROM DAMAGE

A. Protect the work and materials of other trades as well as the Mechanical work and material from damage during construction. Cap and/or plug all piping at the completion of roughing-in and before backfilling. Cap all piping at the close of each day.

3.11 FINAL CONNECTIONS

A. Plumbing Contractor shall verify location of and make all final connections to site utilities, extend to buildings and furnish and install valves, valve boxes, pressure reducing valves, shut-off cocks, cleanouts, pressure regulating valves, adapters and other accessories shown and/or required to connect.

3.12 STUBS

A. All stubs for future connection shall be installed within 12” of location shown. Cap or plug

stub at depth specified for service.

B. Install valves, valve boxes, regulators, and other accessories or devices specified and cap stub.

3.13 FIELD QUALITY CONTROL

A. Testing Criteria

System	Medium	Pressure	Duration
Water	Water	150 psig	4 hours
Gas	Air	150 psig, above grade	12 hours
Drainage and Vent	Water	10 ft water	15 minutes

END OF SECTION

SECTION 15510 – HVAC PIPING

PART 1 - GENERAL

1.1 RELATED DOCUMENTS

A. The requirements of the GENERAL CONDITIONS, SUPPLEMENTARY CONDITIONS, SPECIAL CONDITIONS and DIVISION 1 GENERAL REQUIREMENTS, apply to the work of this section.

B. Section 15010, General Mechanical Requirements applies to this section.

1.2 SUMMARY

A. Work Included:

1. Provide complete piping systems for conduction of heating hot water supply and return, chilled water supply and return , and other fluids for HVAC work including all other chemicals required for pipe flushing, cleaning, testing, etc., all as specified or shown on the drawings.

B. Provide all valves, strainers, piping supports, seismic braces, piping penetration auxiliaries, protective coverings, piping insulation, and other piping appurtenances as shown or specified for HVAC work.

C. Installation of sensing and control devices that mount on or insert into piping.

1.3 RELATED SECTIONS:

A. Section 15010 - General Mechanical Requirements

B. Section 15250 - Mechanical Insulation

C. Section 15800 - Heating, Ventilating and Air Conditioning

1.4 QUALITY ASSURANCE

A. All HVAC equipment shall comply with California Code of Regulations, Title 24, Part 6, latest edition.

B. Standards: Comply with all applicable codes or standards governing process piping, system materials, application, and installation.

C. Welding Qualifications: Welders shall be certified in accordance with American Welding Society "Standard Qualification Procedure".

1.5 REFERENCES

A. Pipes And Tubes

1. Hard Copper Tube: ASTM B88, Types L and M, water tube, drawn temper.
2. Soft Copper Tube: ASTM B88, Types K and L, water tube, annealed temper.
3. Steel Pipe: ASTM A53, Type S, Grade A, Schedule 40, , galvanized, plain ends.
4. Copper Drainage Tube: ASTM B306, Type DWV, drawn temper.

B. Fittings

1. Wrought-Copper, Solder-Joint Pressure Fittings: ASME B16.22.
2. Cast-Copper-Alloy, Solder-Joint Pressure Fittings: ASME B16.18.
3. Bronze Flanges: ASME B16.24, Classes 150 and 300.
4. Copper Unions: ASME B16.18, cast-copper-alloy body, hexagonal stock, with ball-and-socket joint, metal-to-metal seating surfaces, and solder-joint, threaded, or solder-joint and threaded ends. Threads complying with ASME B1.20.1.
5. Steel Pipe Nipples: ASTM A 733, made of ASTM A53 or ASTM A106, Schedule 40, seamless, galvanized, carbon-steel pipe.
6. Malleable-Iron Unions: ASME B16.39, Classes 150 and 300; hexagonal stock; with ball-and-socket joint; metal-to-metal bronze seating surfaces; and female threaded ends with

threads complying with ASME B1.20.1.

7. Galvanized, Threaded Fittings: ASME B16.4, Classes 125 and 250; standard pattern; with threads complying with ASME B1.20.1.

C. Joining Materials

1. Pipe Flange Gasket Materials: Suitable for chemical and thermal conditions of piping system contents.
2. Solder Filler Metal: ASTM B32, alloys to suit system requirements.
3. Brazing Filler Metals: AWS A5.8, alloys to suit system requirements.
4. Welding Filler Metals: Comply with AWS D10.12 for welding materials appropriate for wall thickness and chemical analysis of steel pipe being welded.

1.6 SUBMITTAL

A. Testing, Adjusting, and Balancing Agency Qualifications: AABC or NEBB certified.

1.7 STRUCTURAL REQUIREMENTS

A. Structural members shall not be cut or modified in any manner without specific instructions from the structural engineer.

PART 2 - PRODUCTS

2.1 PIPE MATERIALS

A. Copper/Soldered Joints

B. Pipe: Type L, Type K or Type M hard drawn copper tubing per ASTM B88, plain ends.

C. Fittings: Solder type, wrought copper per ANSI Standard B16.22 or cast red bronze per ANSI Standard B16.18. Do not use T-drill.

D. Unions: Solder type, cast red bronze.

E. Joining Materials/Methods

1. Canfield, Silvabrite or equal lead free solder with a non-corrosive water based flux;

F. Steel/Threaded Fittings

1. Pipe: Black or galvanized steel per ASTM A53, threaded ends, standard weight Schedule 40 or extra heavy Schedule 80.
2. Fittings: Black or galvanized (to match pipe) banded malleable iron, threaded, ASTM A197, 150 lb. standard or 300 lb. extra heavy per ANSI Standard B16.3 (to match pipe schedule).
   a. As an alternate, black or galvanized (to match pipe) banded cast iron, threaded, per ASTM A126 Class B, 125 lb. standard or 250 lb. extra heavy per ANSI Standard B16.4 (to match pipe schedule).
3. Unions: AAR 300 lb. malleable iron, black or galvanized (to match pipe).
4. Joining Materials/Methods
   a. Rectorseal or pure lead and graphite thread lubricant.
   b. Permacel, P-412 ½" wide teflon pipe joint sealant.
   c. Other Services: Use Armite Joint Seal compound No. 250 or Enterprise Commercial Thread-Seal.

G. Steel/Flanged Fittings

1. Pipe: Black or galvanized steel per ASTM A53 plain ends.
   a. Size 8" and smaller: Standard weight schedule 40, schedule 80.
   b. Size 10": Standard weight schedule 40, schedule 60.
   c. Size 12" and larger: Standard in accordance with ANSI B36.10 and B36.19 pipe schedule designations.
2. Fittings: Black or galvanized (to match pipe), cast-iron flanged per ASTM A126, Class B, 125 lb. standard or 250 lb. extra heavy per ANSI Standard B16.1 (to match pipe schedule).
3. Unions, Fitting Connections: Threaded, flanged, matched to fitting.

4. Joining Materials/Methods
   a. Flange gaskets - 1/8" thick, ASTM D-2000, EPDM, coated with lubricant before installing.
   b. Flange bolts - American National Standard regular galvanized square or hex head bolts and galvanized heavy cold-pressed hex nuts.

H. Steel/Welding Fittings
1. Pipe: Black steel per ASTM A-53, plain ends, standard weight as specified for PP-4 (2.1.4.1 this Section).
2. Fittings: Black steel, permanently marked, seamless butt welding type, standard weight or extra strong (to match pipe schedule). Optional in lieu of tees where main is at least two pipe sizes larger than branch Bonney Forge, Threadolets for ½” to 2”, weldolets for branch lines 2 ½” to 4”; fitting shall suit main size.
3. Joining Materials/Methods
   a. Gas or electric arc welding per ASME Code for pressure piping.
      1) Welded Pipe: Welds - Single V butt weld - beveled pipe ends for sizes 2 ½" and larger. Socket welds for sizes up to and including 2".

I. Steel/Grooved Mechanical Joints
1. Pipe: Black steel per ASTM A53 standard weight schedule 40. Special grooved end with grooving only by tools specifically designed for this system by Victaulic, no equal.
2. Fittings: Malleable iron per ASTM A47 Grade 32510 or ductile iron, grooved end mechanical clamping special for this system. Victaulic Full Flow, or equal
3. Couplings: Victaulic Style 77 or 07 Standard, Vic Flange Style 741, or equal
4. Joining Materials/Methods
   a. Gaskets: Victaulic Grade E, synthetic, or equal, coated with Victaulic lubricant before installing.
   b. Clamping bolts - heat treated oval neck track type with hex nuts with 111,000 lb. tensile strength minimum.
   c. All grooved products and components shall be of the same manufacturer.

2.2 PIPING

A. Heating Hot Water above ground
1. Size 2" and smaller: Use type L, Copper, silver brazed joints or steel/threaded fittings.
2. Size 2 ½" to 4": Use type L, Copper, silver brazed joints or steel/flanged fittings or steel/welded fittings.

B. Chilled Water above ground
1. Sizes 2" and smaller: Use type L Copper, silver brazed joints or steel/threaded fittings Schedule 40, black, malleable iron fittings.
2. Sizes 2 ½” and larger: Type L Copper, silver brazed joints, steel/grooved fittings mechanical joint, flanged, or welded fittings, Schedule 40, black for sizes up through 10". For sizes 12" and larger-standard weight Schedule 30.
   a. Alternate: Steel/grooved mechanical joints.

C. Pre-insulated Chilled Water below ground
1. Pipe: Ricwil Chil-Guard system, or equal, composed of integral sealed units of seamless PVC plastic outer jacket 200 mils thick. The carrier pipe shall be PVC plastic pressure pipe. Class 160 per ASTM D-2241
2. Fittings: Bell and Spigot joints with rubber sealing ring.
3. All steel pipes adjoining this system shall be anchored at, or near the point of connection. Connection between PVC and steel pipe shall be made by inserting steel pipe into PVC bell end.
4. Insulation: Insulation shall be polyurethane foam completely filling the annular space between the carrier pipe and the outer protective jacket. The in-place density shall be 2 pcf; with a “K” factor of .014 BTU/hr. (sq.ft.)(°F/in.) at 73°F; and a closed cell content of 90% minimum. Exposed insulation at unit ends shall be sealed with factor applied vapor barrier mastic. Insulation thickness shall be 2”.

5. Install with 12 GA tracer wire.

D. Condenser Water Piping (above grade): Same as for chilled water piping above ground.

E. Condenser water piping (below grade) Polyvinyl Chloride (PVC)/Solvent-fused (Welded) Joints:

F. Pipe: Schedule 80, Type I, Grade I PVC, plain ends, per ASTM D-1785. Polyvinyl Chloride (PVC)/Solvent-fused (Welded) Joints: Pipe and fittings shall be manufactured from virgin rigid PVC (polyvinyl chloride) vinyl compounds with a Cell Class of 12454 as identified in ASTM D 1784. Pipe and fittings shall be manufactured as a system and be the product of one manufacturer.

1. Fittings: PVC Schedule 80 socket type, per ASTM 2467.
2. Joining Materials/Methods: Solvent-Fusing (welding), using solvent and methods per manufacturer's recommendations.

2.3 VALVES, UNIONS AND FLANGES

A. These include valves manually operated with hand wheel, levers or other handles.

1. Furnish valves with chain-wheel operators for mechanical room applications where valves are installed above 7'-0" from floor.
2. Furnish two tee handle operators for each size to suit all valves which are installed below grade in access boxes and which are not fitted with integral handles; hub end valves shall be used where required.
3. Valves on systems operating over 100 psi shall be rated for 150 lb. or higher as required.
4. Unions shall have the same pressure rating as pipe fittings.
5. Ball Valves:

B. Shut-off service

1. Sizes 1” and smaller: Nibco 585, 400 psi rated, threaded or sweat ends, full port, teflon seat, quarter turn handle with stops, two piece bronze body.
2. Sizes 1 ¼” to 2": Nibco 595 Y, 400 psi rated, three piece bronze body, threaded or sweat ends, teflon seat, full port swing-out accessibility, removal.
3. Sizes 2 ½": Nibco 595 Y, 400 psi rated, three piece bronze body, flanged ends, teflon seat, full port swing-out accessibility, removal.

C. Balancing/shut-off service (Flow Metering Device)

1. 300 psi, 250° F rating, Tour & Anderson.
2. Sizes ½” to 2": Tour & Anderson Circuit Balancing Valve, Series 787 (STAD), shall be Y-Pattern design and all metal parts of nonferrous copper alloy; positive shut off EPDM no drip seat; hidden memory stop; threaded connections. Valve to have differential pressure read-out ports across valve seat area.
3. Sizes 2 ½” and larger: Tour & Anderson Circuit Balancing Valve Series 788 (STAF, flanged end) or Series 789 (STAG, grooved end), shall be Y-Pattern design with cast iron body all other metal parts of nonferrous copper alloy. The valves shall have eight, twelve, or sixteen 360° adjustment turns of the hand wheel with hidden memory feature to program the valve with tamper-proof balancing setting.
4. Provide portable-indicating meters encased in protective case, one for the ½” to 1 ½”, and one for the larger sizes. The meter shall readout in inches w.g. with $\pm$ 1.5% accuracy. Provide master charts reading out in gpm for each meter.

D. Automatic Flow Control Valves

1. Valves shall control flow to within $\pm$ 5% of design flow
2. The valve flow curve shall be smooth over its entire nominal control range. Gaps, bumps or dips in flow curves shall not be acceptable.
3. No valves, whether single or multifunction, shall be the cause of noise, cavitation or air bubbles in the entire hydronic system.

E. Chilled water and Hot water modulating control valves

1. Delta or equal Model DG

a. Sizes ½" to 2" shall be bronze body, rated at 250 psig working pressure. The valve stem shall be stainless steel, valve plugs shall be stainless steel guided to ensure correct seating. Stem packing shall be spring loaded EP V-Rings to minimize stem friction. Stem lift shall be ½" to ¾". The control valves shall be equal percentage with composition replaceable discs providing tight shutoff.
b. Sizes 2 ½" to 6" shall be cast iron flanged, rated at 125 psig working pressure. The valve stem shall be stainless steel, valve plugs shall be stainless steel guided to ensure correct seating. Stem packing shall be Teflon, spring loaded EP V-Rings to minimize stem friction. Stem lift shall be ¾" to 1 ½". The control valves shall be equal percentage with composition replaceable discs providing tight shutoff.
c. The actuator shall be modulating (proportional) with a mechanical spring return to fail closed, positive positioning. There shall be a visual valve position output signal for electronic feedback to the DDCS. The actuator shall provide the minimum torque required for proper valve closeoff, with an approximate running time of 2 minutes for full stroke. The actuator shall be designed with current limiting motor protection. End of travel switches shall not be acceptable. All valves shall have a minimum resolution of 40:1. All actuators shall be UL listed.
d. The manufacturer shall warrantee all actuator/valve assemblies for a period of two years from date of installation not exceeding 30 months from date of original shipment.

F. Butterfly Valves: Shut-off service.
1. 175 psi rating. Nibco LD2000, Keystone, DeZurik, or equal, extended neck one-piece cast iron body with lug ends, 416.S.S. shaft and bushings, EPDM seat, and aluminum/Bronze disc. (175 psig). Victaulic Vic-300 (steel) or Style 608 (copper) may be used in grooved piping systems. Other features as follows:
2. Sizes 2 ½" to 4": Infinite position lever handle, adjustable stop, aluminum bronze disc, stainless steel shaft, and bushings.
3. Sizes 6" and larger: Enclosed manual rotary actuator with hand wheel, indicator and memory stops when used for balance service, and semi-cast aluminum bronze disc, stainless steel shaft, and bushings.

G. Check Valves: Back flow prevention service
1. Swing check, Class 125 Buna-N Disc, Nibco or equal.
   a. Sizes 2" and smaller: Fig. T-413; bronze body, threaded ends, plug type bonnet.
   b. Size 2 ½" and larger: Fig.F-968; iron body brass mounted, flanged ends, bolted bonnet.
2. Non-slam check Type NS, Bell & Gossett, Nibco, or equal.
   a. Size 4" and larger: Rating Fig. W-960; 250 psi rated, wafer or flanged ends.
   b. Cast-iron body, bronze plug, seat and guide bushing, stainless steel helical spring.
   c. Flow area through valve shall exceed cross-sectional area of specified pipe size by no less than 10%.
3. Grooved fittings Non-slam check Type NS, Victaulic.
   a. 2 ½" and larger: Rating pressure 300 psi, grooved ends.
   b. Ductile iron body, synthetic rubber coated disc, welded nickel seat, stainless steel shaft and spring.
   c. Flow area through valve shall exceed cross-sectional area of specified pipe size by no less than 10%.

H. Pressure Reducing Valve
1. Sizes ½" - 3", Watts Model 223 or equal.
   a. Bronze body, sealed cage, removable disc holder to allow disc replacement. Rated for temperatures up to 160o F. Adjustable pressure range from 25 to 75 psig with 300-psig initial pressure.
   b. Provide with a separate strainer and built in bypass feature.

I. Pressure Relief Valve
1. Sizes ¾" – 2", Watts Series 174A or equal.

2. Bronze body, pressure range 30 psi – 150 psi, ASME Section IV certified, raised seat, non-mechanical disc alignment, maximum temperature rating 250o F.

2.4 PIPING AUXILLARIES

A. Industrial Water Make-up

1. Pressure reducing valve connected through ball valve and check valve.

B. Air Vent Valves

1. Petcock shall be Lunkenheimer #1178 with a knurled handle.
   a. Large air vents off of mains 8" and larger shall be IAC industrial high capacity type, Amtrol 720 or equal.
   b. Automatic Air Vents: Watts FV-4M1, Armstrong, Hoffman, float type air vent complete with stamped brass body and cover and solid, non-metallic float Maximum rated working pressure and temperature shall be 150 psig and 240°F.

C. Suction Diffusers

1. Furnish and install as shown on plans, an angle pattern flow straightening fitting equipped with a combination diffuser-strainer orifice cylinder, flow straightening vanes, start-up strainer, permanent magnet and adjustable support foot.
2. The combination diffuser-strainer-orifice cylinder shall be designed to withstand pressure differential equal to the system pump shutoff head and shall have a free area equal to five times the cross section area of the pump suction opening.
3. The length of the flow straightening vanes shall be no less than 2 times the diameter of the system pump suction connection.
4. The flow-straightening fitting shall be of cast iron construction. The fitting shall have a carbon steel combination diffuser-strainer-orifice cylinder with 3/16" diameter perforations to protect the system pump. The full-length carbon steel flow straightening vanes shall provide non-turbulent flow to the suction side of the system pump. The magnet shall be positioned in the flow stream to protect the pump seal(s).
5. The start-up strainer shall be of 16-mesh bronze, and the adjustable support foot shall eliminate pipe strain at the flow fitting/pump connection.
6. All internal components shall be replaceable.
7. Acceptable Manufacturer: ITT Bell & Gossett or equal

D. Natural Gas Flow Meters

1. Equimeter Model as scheduled on drawings or equal.
2. Unit shall be constructed of cast steel ANSI B 16.5 and shall be hydrostatically tested at 2 times the maximum rated working pressure. The meter shall be air leak tested to 1.1 times operating pressure. The meter shall operate over a temperature range of –20 degrees to +165 degrees F. The meter shall be rated to operate at 175 psig.
3. Provide direct reading, non-adjustable index corrected for pressure and temperature reading out in cubic feet, mounted in an aluminum index box. Also provide an electronic signal for connection to the EMS system that will provide accurate output of cubic feet corrected for pressure and temperature.

E. Piping Flexible Connectors

1. Metallic Piping Systems (Below 140°F): Garlock style, 204, General Rubber 1050 or equal. Double arch seamless chlorobutyl elastomer tube and cover meeting ASTM specifications D2000 Grade 2AA610AB.L13 rated for 150 psi, 250°F service. The body shall be reinforced with rectangular or round body rings and a minimum of six bias plies of polyester fabric. An acrylic coating shall be applied completely and uniformly to the cover. All expansion joints shall be rated for 140 psi, 26" vacuum at 250o F for sizes up to and including twelve inches in diameter. Provide 3/8" thick galvanized flat, not L shaped, backup rings and control rods with a rubber bushing to eliminate metal to metal contact to eliminate axial extension. All expansion joints shall be domestically manufactured. The manufacturer shall provide documentation utilizing oven aged and cold flexibility tests to verify elastomer capability.

2. Metallic Piping System (140°F and above): Hyspan 5501R 3 ply 304 stainless steel bellows, Flexonics model TCS-R or equal. 304L Stainless Steel bellows rated for 150 psi, 750°F
3. Plastic Piping Systems: EGC No. M-150 Flexijoint PTFE bellows with five convolutions.
4. Others as specified in other piping sections or shown on drawings.

F. Piping Flexible Hose

1. Flexible connections in refrigerant lines and other high temperature lines shall be stainless steel hose and braid with carbon steel fittings.
   a. Connectors two inches and diameter or less shall use male threaded nipples.
   b. Connectors greater than 2” in diameter shall be flanged.
   c. Hoses shall be suitable for operating temperatures up to 500o F.
   d. All metal flexible connectors shall have a certified helium leak test and hydrotest to maximum rated system test pressure.

G. Expansion Loops

1. Metallic Piping Systems: Metraflex Metraloop or equal.
   a. Flexible loops shall be designed to impart no thrust loads on the anchors.
   b. Loop shall consist of two flexible sections of hose a braid, two 90o elbows and a 180o return.
   c. Hose and braid: Series 300 Stainless Steel rated for 150 psi, 400°F
2. Others as specified in other piping sections or shown on drawings.

2.5 STRAINERS

A. Y-Type, Armstrong

1. Sizes 2" and smaller: 250 psi bronze body, threaded or soldered ends, threaded screen retainer. monel screen with .045" perforations.
2. Sizes 2 ½” and larger: 125 psi body, 125 lb. flanged or grooved ends, bolted screen retainer. monel screen with .045" perforations.

B. Basket Type: Sarco, No. 528 with bolted cover and stainless steel basket.

2.6 INSTRUMENTATION

A. Thermometers:

1. Trerice, adjustable angle with 304 stainless steel stem, 303 stainless steel mounting, 302 stainless steel head; 3" diameter, 270o arc white face with black numerals; ½” N.P.T. Provide the following:
   a. Thermometers installed on insulated pipes shall have 2 ½” adjustable extension neck with brass separable socket.
   b. Provide cap and chain where sockets only are shown.
   c. Normal reading shall be at midscale and range shall be selected accordingly.
   d. Install at supply and return of each piece of equipment and coil and where shown.

B. Pressure Gauges

1. Trerice, liquid filled pressure gauges with Pattern DP stainless steel drawn case; bronze rotary movement phosphor bronze bourden tube. Provide front adjustable recalibration and recalibrator; 2 ½” when installed 6’ or below and 4" diameter above 6’, 270o arc white face with black numerals; ¼” bottom or back connection as required. Range shall suit application or as shown on drawings, normal operation shall be mid-scale. Provide the following:
   a. Type 24 gauge cock and pulsation damper
   b. Brass pig tail siphon.

C. Insertion Fittings and Instruments

1. Peterson Engineering Company "Pete's Plug"; ¼” MPT solid brass fitting and cap with Nordel valve core for water and neoprene valve core (for air) to suit 1/8” diameter instrument probes.

2.7 HANGERS AND SUPPORTS

A. Building Attachments: Powder-actuated-type, drive-pin attachments with pullout and shear capacities appropriate for supported loads and building materials, UL listing and FM approval for fire-protection systems. Install additional attachments at concentrated loads, including valves, flanges, guides, strainers, expansion joints, and at changes in direction of piping. Provide beam clamp retaining straps for all pipe supports where attached to steel beams.

B. Mechanical-Anchor Fasteners: Insert-type attachments with pullout and shear capacities appropriate for supported loads and building materials.

C. Load Distribution: Install hangers and supports so piping live and dead loading and stresses from movement will not be transmitted to connected equipment.

D. B-Line, finish: Electro-Chromate or hot dipped galvanized.

1. Individual: B3690, B3100 cleavis or B3110
   a. Use H-104 all thread rod.
   b. Use B3110 for pipe subject to movement.
2. Pipe Straps: B2007-B2072 for standard pipe, B2000-B2069, copper coated for copper.
3. For insulated pipe - B3690 pipe hangers sized to allow pipe insulation to pass continuously through the hanger.
   a. Trapeze Supporting Rods: Diameter sufficient to support the load with a safety factor of 5.
   b. Isolators: 319CT or Trisolator.

2.8 PIPE IDENTIFICATION

A. Pressure sensitive, self-adhesive cloth tapes by W.H. Brady or equal..

PART 3 - EXECUTION

3.1 PIPING SYSTEMS

A. General:

1. Provide trenching and backfill for buried piping and install with the following minimum cover unless shown otherwise, cover is from top of pipe to finish grade. Place pipe on 6" sand bed on trench bottom and cover pipe with 12" sand after placement. Remaining backfill may be native soil.
   a. Chilled Water Pipe - 30"
2. Bury a No. 18 AWG insulated copper locating wire with all non-metallic pipe. Copper wire shall have at least 12” above grade at each end.
3. Install all piping as soon as possible after excavation or cutting of the piping has been done. Cap or plug ends of pipe immediately after installation to prevent the entrance of foreign material and leave in place until removal is necessary for completion of installation.
4. Install piping level, plumb, and parallel to structure line except where shown otherwise or required by function or regulation to be angled or sloped.
5. Install the piping systems to present a neat appearance both as to workmanship and grouping.
6. Install all piping free of traps or unnecessary bends, arranged to conform to building requirements, and to suit the necessities of clearance for other mechanical work such as ducts, flues or conduits.
7. Use reducing fittings where any change in pipe size occurs. Bushings shall not be used. Use eccentric reducing fittings wherever necessary to provide free drainage or air elimination.
8. Install piping concealed within spaces provided in the structure unless specifically noted to be exposed.
9. Install piping without bending, springing, forcing, or placing undue stress on the pipe, fittings, connected equipment, or terminals.
10. Install piping to allow for expansion, contraction, and structural settlement. Provide pipe

guides and pipe anchors where required and shown on drawings. Contractor shall design all expansion / contraction systems per ASHRAE 2004 “HVAC Systems and Equipment Handbook, Chapter 41”.

11. Underground anchors shall consist of plates welded to pipe and encased in concrete.
12. Install piping so it does not directly contact the structure except where shown or specified otherwise.
13. Expansion: Install piping with sufficient offsets, loops, and/or swing joints to allow for expansion and contraction. Anchor piping at equipment to restrain movement at those locations.
14. Install piping so that it does not interfere with equipment access.
15. Provide for drainage of lines and elimination of air.
16. Furnish and install manual air vent at high points of water systems including all coil piping and at any other points necessary to free systems of air. Locate within 7’-0” of floor.
17. Flush each piping system thoroughly clean before connecting to apparatus or equipment.

3.2 THE FOLLOWING TRENCHING PROCEDURES SHOULD BE USED FOR PVC PIPING SYSTEMS.

A. The trench should be excavated to ensure the sides will be stable under all working conditions.

B. The trench should be wide enough to provide adequate room for the following.

1. Filling and compacting the side fills.
2. Minimum width shall be not less than the greater of either the pipe outside diameter plus 16 inches or the pipe outside diameter times 1.25 plus 12 inches.
3. Trench width may be different if approved by the engineer.

C. The trench bottom should be smooth, free of rocks and debris, continuous, and provide uniform support. If ledge rock, hardpan or large boulders are encountered, the trench bottom should be padded with bedding of compacted granular material to a thickness of at least 4 inches. Foundation bedding should be installed as required.

D. Trench depth is determined by the pipe’s service requirements. The minimum cover for lines subject to heavy overhead traffic is 24 inches.

E. A smooth, trench bottom is necessary to support the pipe over its entire length on firm stable material. Blocking should not be used to change pipe grade or to intermittently support pipe over low sections in the trench.

F. Paint all exposed piping:

1. Colors to be approved by SMUD, or to match existing pipe colors.

G. Pipe Sizing:

1. Pipe sizes shown are nominal. Should size not be shown, or erroneously shown undersized for any intermediate section of piping run, install pipe of the same size as the largest pipe connecting to the section in question.
2. Run full pipe size through shutoff valves, balancing valves, etc. Change pipe size within three pipe size diameters of final connection to temperature control valves, coils and other equipment.

H. Drains: Install valved drain at low points of all hydronic systems; line size up to 2" pipe, 2" for pipes larger than 2" size.

I. Flashing: Flash piping penetrations of exterior walls. Install escutcheons.

J. Piping Miscellaneous

1. Provide unions at connections to equipment, on service side of valves, and elsewhere as required to facilitate maintenance.
2. Provide dielectric connectors between dissimilar metals.
3. Victaulic Style 47 Dielectric water way for grooved piping systems.
4. Provide brass-piping connection of copper tubing to threaded terminals or equipment.
5. Use eccentric reducers only to keep top of water pipes level.
6. Connect water branches to provide for air elimination.

7. Grade water piping continuously up to air vent connections.

K. Sleeves

1. Install sleeves of sufficient size to allow for free motion of pipe.
2. Where pipes penetrate walls or slabs, install sleeves of 10 gauge galvanized steel pipe.
3. Finishes sleeves flush when in walls and extend a minimum of 2" above floor when passing through floor slabs and outside walls shall be caulked with oakum and mastic and made watertight.
4. No visible leakage at sleeves will be permitted.
5. Sleeve all pipes where pipes pass through footings with 18 gauge Galvanized Iron or PVC pipe sleeves.

L. Cathodic Protection

1. Install insulated flanges or dielectric unions at points of connection between pipes and equipment as follows:
   a. Between copper or brass piping and steel or cast iron pipe.
   b. Between copper or brass piping and any steel material.

3.3 EXCAVATING AND TRENCHING

A. Perform all excavations as required for the installation of the work included under this section, including shoring of earth banks to prevent cave-ins and to protect workmen and equipment. Restore all surfaces, roadways, walks, curb, walls, existing underground installations, etc. damaged or cut as a result of the excavations to their original conditions in a manner approved by SMUD. Excavations shall be ample in size to permit pipes or equipment to be laid at elevations intended, and to permit ample space for caulking and joining and compacting backfill around pipe. Maintain all warning signs, barricades, flares and red signal lanterns as required by the Safety Orders of the Division of Industrial Safety and local ordinances. Perform all pumping required to remove all water from trenches during installation of piping and backfilling.

B. Stop machine excavation for pipe trenches in solid ground, several inches above required grade, so that a firm and uniform bearing throughout entire length of pipe is provided. In lieu of above hand excavation on bottom of trench, the contractor may excavate to a depth one quarter of the nominal diameter of pipe, but in no case excavate less than 6" below required grade line, and place a bed of sand or granular soil, properly compacted to provide a uniform grade and to provide a firm support for pipe throughout its entire length. When pipe or underground conduit with insulation or protective coating is to be placed in the trench, clean sand only shall be used for bedding the pipe or conduit.

3.4 BACKFILLING

A. No backfilling operations shall begin until the required tests and inspections have been made and approval for backfilling has been given by SMUD. Should any of the work be enclosed or covered up before it has been approved, contractor shall, at his expenses, uncover the work. After it has been inspected, tested and approved, he shall make all repairs necessary to restore the work of the other contractor to the condition in which it was found at the time of uncovering. Insulated pipe and pipe with protective coating shall be backfilled with clean, concrete grade sand for a minimum distance of 12" above the top of the pipe. Compact sand backfill by flooding or jetting. Protect pipe from uplift during jetting operation.

B. Except under existing paved areas, walks, roads, or similar surfaces, and in cases where rock is encountered, backfill more than 12" above the top of the pipe shall be made using suitable excavated material or other approved material as necessary. The backfill shall be placed in 6" layers, measured before compaction, and tamped either by hand or machine.

C. Machine tamping of backfill for excavations under existing or proposed pavement, walks, roads or similar surfaces, and under new slabs on grade, shall be made to a minimum density of 95% of a maximum dry density as established by ASTM D 1557 or AASHTO T 180. Backfill for excavation under pavement, slabs, walks, roads and similar surfaces shall be compacted to a minimum density of 95% of a maximum dry density as established by

ASTM D 1557 or AASHTO T 180. Surface work shall be replaced to match the existing work. Replace or repair to its original condition all sod, concrete, or other materials disturbed by the trenching or backfilling operation. Remove and dispose of all excess material.

D. PVC DWV Piping

1. Backfill should be stable and provide protection for the pipe.
2. The pipe should be surrounded with a granular material that is easily worked around the sides of the pipe. Backfilling should be performed in layers of 6 inch with each layer being compacted to 95% compaction.
3. A mechanical tamper is recommended for compacting sand and gravel backfill that contain a significant proportion of fine-grained material, such as silt and clay. If a tamper is not available, compacting should be done by hand.
4. The trench should be completely filled. The backfill should be placed and spread in uniform layers to prevent any unfilled spaces or voids. Large rocks, stones, frozen clods, or other large debris will be removed. Heavy tampers or rolling equipment should only be used to consolidate the final top layer of backfill.

3.5 CROSSING EXISTING UTILITIES

A. Extreme care shall be exercised during excavation across existing utility lines particularly gas and electrical lines for trenching to install new utility lines. Hand excavate all trenches in the proximity of existing lines so as not to damage or cut into them.

B. All existing utility and service lines shall be located by hand excavation prior to trenching with equipment.

C. The location, depth and invert elevations of all existing utilities to be crossed or to which connecting shall be determined before performing any other work or ordering any materials for the project.

3.6 PIPE JOINTS AND CONNECTIONS

A. Cutting: Cut pipe and tubing square with a circular cutting machine, chain or other appropriate sharp cutters only and ream ends after cutting. Do not saw.

B. Fit piping and make changes of size or direction only with proper manufactured fittings; do not bend pipe or use job fabricated fittings, street ells, bushings, reducing flanges, or close nipples.

C. Threaded Pipe: Place joint compound carefully and smoothly on male thread and not in fitting. Make threaded joints tight with tongs or wrenches. Caulking of any kind will not be permitted. Remake leaky joints with new materials. Use of thread cement caulking to make end joint tight is absolutely prohibited. Use only American Standard Pipe threads. Cut all threads accurately, not more than two threads shall show beyond fitting.

D. Copper and Brass Pipe: Clean surfaces to be joined of oil, grease, rust and oxides. Remove grease from fittings by applying carbon tetrachloride with a brush. Clean socket of fitting and end of pipe thoroughly with crocus cloth to remove rust and oxides. After cleaning and before assembly or heating, apply Handy or Airosil Flux to each joint surface and spread evenly. Apply heat with an oxyacetylene torch. Make joints in accordance with instructions in bulletin 17, published by Handy and Harmon Company, or Air Reduction Catalog No. 925. Exercise extreme care to prevent overheating of pipe and fittings. Do not use sharp-tooth wrench in making up brass pipe. Use friction wrenches exclusively when erecting plated, polished, or soft-metal piping.

E. Welded Pipe: Make-up with oxyacetylene or electric arc process. All welding shall be done by competent welders conforming to the American Standard Code for Pressure Piping SA B31-1, Section 6, Chapter 4, and Appendix A. At the request of SMUD's representative the Contractor shall furnish certification from an approved testing agency or National Certified Pipe Welding Bureau that the welders performing the work are qualified.

F. PVC pipe installation shall comply with the latest installation instructions published by the manufacturer, and shall conform to all local plumbing, building, and fire code requirements.

1. Solvent cement joints shall be made in a two-step process with primer manufactured for

thermoplastic piping systems and solvent cement conforming to ASTM D 2564. The system shall be protected from chemical agents, fire stopping materials, thread sealant, plasticized vinyl products, or other aggressive chemical agents not compatible with PVC compounds.

2. Joint surfaces shall be clean and free of moisture. A purple primer conforming to ASTM F656 listed in Appendix A shall be applied. Solvent cement not purple in color and conforming to ASTM D2564 listed in Appendix A shall be applied to all joint surfaces. The joint shall be made while the cement is wet, and in accordance with ASTM D2855 listed in appendix A. Solvent cement shall be handled in accordance with ASTM F402 listed in Appendix A. The use of “all purpose” type cement is not acceptable.

G. Valves connecting copper tubing to threaded pipe shall be threaded valves as specified elsewhere and shall be fitted with a bushing on the side which connects to copper tubing. Copper to copper valves may be bronze, solder joint type.

H. Adapters: Wrought copper male adapters shall be used wherever it is necessary to connect copper tubing to a valve or tee having threaded connections.

I. Dielectric Unions: Provide dielectric connectors between copper and dissimilar metals.

3.7 PIPING HANGERS AND SUPPORTS

A. General

1. Miscellaneous: Provide all supports, anchors, concrete pads, grouting, bedding, bracing, vibration isolation, and accessories required for pumps and other equipment.
2. Support all piping with appropriate manufactured devices as specified use no wire or makeshift device.
3. The engineer prior to installation shall approve all hanger material.
4. Size hanger rods, screws, bolts, nuts, etc., according to manufacturer's recommendations. Size hangers to fit around bare pipe, isolator, or insulated pipe shield as appropriate.
5. Use cadmium plated or galvanized hangers, attachments, rods, nuts, bolts and other accessories where exposed to weather. Hot dip galvanize all items which are not factory finished. Plating for hinged movements must be done at factory.
6. Hanger rods with C-clamp type structural attachment shall be equipped with retaining straps.
7. At each support on bare copper tubing or piping system, install an isolator; at each support point on insulated piping systems, install an insulated pipe shield.
8. Burning, welding, cutting, or drilling on any structural member may only be done if approved by the structural engineer.
9. No valve or piece of equipment shall be used to support the weight of any pipe.
10. Provide a hanger close to the point of change of direction of pipe run in either horizontal or vertical plane.
11. When hangers or supports do not come within one foot of a branch line fitting, install an additional hanger or support at the fitting.

B. Pipe Supports

1. Horizontal Lines
   a. Suspend all horizontal pipes individually and not in contact with the structure except as specified below. Support each branch line with at least one hanger.

C. Parallel pipes may be supported on trapeze type hangers. Size trapeze hangers to support weight of piping plus a surcharge of 300 pounds. For three or more pipes use a size suitable for the load in accordance with manufacturers published load ratings. No deflection to exceed 1/180 of a span. Anchor rods securely to building structure.

D. Lines Near Floor

1. Support all piping near the floor individually by means of adjustable steel pipe stanchions with welded end plates properly secured to the pipe and to the floor. Alternate: Lines also near walls may be suspended as specified above for horizontal lines, from appropriately sized and mounted angle brackets.

2. Hanger Spacing Schedule:

Type of Pipe	1" dia. Or under	1¼" to 2" dia	2½" dia & over
Steel Pipe	8'-0"	10'-0"	12'-0"
Copper Tubing	6'-0"	8'-0"	10'-0"
Cast Iron	Support at 8' - 0" intervals and on each side of and within 12" of both sides of joint		

Rod Size:	$^{3}/_{8}$"	½"	$^{5}/_{8}$"	$^{5}/_{8}$"
Pipe Size	($^{1}/_{2}$" – 2")	(2 ½" - 5")	(6" - 8")	(over 8")

3.8 SEISMIC RESTRAINTS

A. Seismic supports and bracing for all piping and equipment shall be furnished and installed in accordance with CBC Chapter 16. Standard support and anchorage methods and materials published by SMACNA and approved by State agencies may be used.

B. Seismic Restraints and Isolators:

1. All isolators specified shall be specified for seismic Zone 3 provide seismic calculations with submittals.
2. All restraints and isolators shall comply with local codes and must meet Seismic Zone 3 requirements.
3. Contractor is responsible for full compliance.

3.9 PIPING PENETRATIONS

A. Where pipes penetrate members of the structure, install proper sleeves, packing, flashing, and collars as follows unless shown otherwise.

1. Penetrations of fire-rated partitions, walls, and plenum walls or floors shall be sealed per U.L. approved details.
2. At exposed face of wall, floor, or ceiling, fit penetrating pipe with a neat, rigid, securely attached collar or escutcheon. In unfinished areas use galvanized plate; in finished areas use chrome plated escutcheon.
3. Install isolators at all hangers and clamps supporting uninsulated piping and tubing and at all points that pipe comes in contact with structure or other pipes

3.10 VALVE INSTALLATION

A. Valves and Strainers

1. All shutoff valves in chilled and heating hot water lines shall be ball valves, unless otherwise shown.
2. Provide valves and strainers of the same size as the pipe in which they are mounted unless specifically shown otherwise.
3. Furnish discs suitable for service intended.
4. All valves shall be properly packed and lubricated.
5. Unions shall be placed adjacent to each threaded or soldered valve.
6. Connect valves and strainers in copper piping systems with solder-to-threaded brass adapters.
7. Provide valves with trim proper to the service on which they are applied.
8. Locate above-grade valves:
   a. With stems above the horizontal plane of the pipe unless above ceiling.
   b. With valve handles below the horizontal for ease of access when above ceiling.
   c. Within six feet of floor where possible and reasonable.
   d. Out from under equipment.
   e. Readily accessible with adequate clearance around operating wheel or lever handle.
9. Position below-grade valves in access boxes
   a. With stem horizontal if fitted with integral operating handle; provide adequate clearance for operation.
   b. With stem upright if fitted for operation by tee handle.
   c. All interior valves below floor and all exterior valves below grade.

1) Install valves with the stems in vertical up position.
2) For all valve handles located more than 12" below floor or grade, install fixed extension stem to reach within 6" of floor or grade. Terminate stem with 1 ½" square lug.
3) Provide SMUD with two 24" stem T-handle wrenches with 1 ½" female lug.

10. Provide shut-off valves at all inlet connections equipment; on water systems in sizes 2 ½" and larger, butterfly valves shall be used for shut-off service in lieu of ball valves. Provide gear driven operators for all valves 6" and larger.
11. Fit each strainer with globe or ball type blow down valve sized to match blow down tapping in screen retainer; run discharge pipe to nearest floor drain or other appropriate discharge point as shown or directed.

B. Air Vents

1. At all locations indicated on the drawings, provide an automatic air vent or manual air vent and 1/4" ball valve(s). Connect to piping system at high points on main pipe risers, water coils and other indicated locations. Install in accessible locations. Do not install in concealed areas.

C. Instrumentation: Install all instrumentation items in a location where they are readily viewable and serviceable.

D. Flow Measuring Devices: Install flow-measuring devices in accordance with manufacturer's recommendations. Provide required minimum distances upstream and downstream of the installed device. Notify Engineer prior to installation if these minimum requirements cannot be met in the location shown on the drawings for device installation.

3.11 PRESSURE TEST FOR PIPE SYSTEMS

A. Test all piping at completion of rough in, in accordance with the following schedule and show no loss in pressure or visible leaks after a minimum duration of 12 hours at the test pressure indicated. The contractor shall furnish testing equipment. Testing personnel shall be competent to conduct the tests, and demonstrate satisfactory completion of tests to the engineer.

1. Before covering, concealing, or using any piping system or parts thereof, test and prove tight; obtain certification of the inspector that this has been accomplished. Valves and connected equipment or any system component with a pressure rating less than the system test pressure shall not be subjected to the test. If systems are tested in sections, include connections to preceding tested sections in ensuing tests.
2. All systems specified to be tested using water as the test medium shall be first checked by pre-testing the test section or system with compressed air at five psig for a period of thirty (30) minutes. Correct any major leak disclosed by this pre-test before proceeding with the specified testing using water as the test medium.
3. After producing the specified test pressure, disconnect the pressurizing source; do not introduce further pressure for the duration of the test period. Should any pressure loss or detectable leak occur within test period, repair piping and retest. Repeat the procedure until the system is proved tight.
4. Open all air vents at high points to accelerate air removal.

System Tested	Test Pressure PSIG	Test Medium
All chilled, heating hot water, and condenser water piping (above grade).	150	Water, let stand 12 hours
Chilled water and condenser water piping (below grade)	60	Water, let stand 12 hours

3.12 OWNERS INSTRUCTION

A. Review the installation of all equipment and controls with SMUD after all systems are operating automatically. Instruct SMUD in the adjustment of all control and equipment devices. Allow a minimum of 4 hours for this instruction.

3.13 FILLING AND CLEANING OF PIPING SYSTEMS

A. Piping Cleaning: After pipe installation and before installing valves or making final connections, flush or purge piping systems clean of foreign substances, using water to flush piping conducting liquids and compressed air to clear piping conducting gases, except as specified otherwise in other piping sections.

B. Clean each system as follows

1. Add cleaner to water in system in sufficient quantity to obtain recommended concentrations.
2. Circulate the cleaning solution through the system for 24 hours. During this cycle, chillers, boilers and other equipment shall not be in the loop with the new piping.
3. At the end of the circulation cycle, shut down any operating equipment and flush the system as rapidly as possible; continue flushing until the alkalinity of the solution in the system has reduced to that of the water supplied for flushing. Drain system.
4. Clean all strainers and screens in system.
5. Before each system is put into operation, analyze the supply water and introduce treatment chemicals into the system in sufficient quantity to bring the concentration to the recommended starting dosage. The contractor performing the cleaning and chemical treatment shall provide a letter certifying the correct concentration is attained.

3.14 CHEMICAL TREATMENT OF WATER SYSTEM

A. Coordination: Examine the drawings and installation of each system to be treated; note extent, materials, etc. Coordinate location and installation of treatment system connections and apparatus with the installer of the systems being treated.

B. General

1. Supply all material and labor requisite to timely execution of this work.
2. The mechanical contractor shall provide cleaning of strainers.
3. After each system has been operated for a period of one week, test the chemical concentration. If the level has dropped below the initial concentration, add sufficient chemical to raise the concentration to required levels.
4. Provide indoctrination and water management program as specified.

C. Mechanical contractor shall provide all necessary pumps, bypass piping and strainer to allow circulation during chemical treatment process.

D. Chilled and heating hot water system see specification section 15631.

3.15 IDENTIFICATIONS APPLICATIONS

A. Piping and Valves

1. Provide identifications for all valves. Provide tags with lettered inscriptions (not numbered).

3.16 ADJUSTING AND FINISHING

A. Air Vents: After all air has been purged from hydronic systems, close all valves serving automatic air vents.

END OF SECTION

SECTION 15631 - WATER TREATMENT

PART 1 - GENERAL

1.1 RELATED DOCUMENTS

A. The requirements of the GENERAL CONDITIONS, SUPPLEMENTARY CONDITIONS, and DIVISION 1 GENERAL REQUIREMENTS, apply to the work of this section.

1.2 DESCRIPTION

A. General

1. Provide all equipment, apparatus, material, and supervision necessary to fit and apply chemical treatments to the water systems prior to startup of the mechanical systems involved.
2. The mechanical systems involved include:
   a. Chilled Water System (Closed System) cleaning of piping only is part of this specification; the chemical treatment for the Central Plant Chilled Water System is existing.
   b. Heating Hot Water System. (Closed System) for the Absorption Chiller and Tecogen Generators systems are part of this specification, the central plant hot water chemical treatment system is existing.
   c. Condenser Water System (Open System) for the Absorption Chiller and condenser water treatment for the new electric chiller is as described below.
   d. Tecogen Primary Jacket Water system, cleaning of piping only, no chemical treatment.
   e. Tecogen Primary Auxiliary Water system, cleaning of piping, chemical treatment, and antifreeze.

B. Work Described Elsewhere:

1. Mechanical equipment and piping systems - other Sections of Division 15.

1.3 QUALITY ASSURANCE

A. Qualifications of Supplier:

1. Work required under this Section shall be done by the Mechanical Contractor with all chemicals supplied by the chemical treatment company for chilled and hot water systems.
2. The water treatment chemical and service supplier shall be a recognized specialist, active in the field of industrial water treatment, whose major business is in the field of water treatment, and who shall have regional water analysis laboratories and service department with full time service personnel located within the trading area of the job site.
3. The indoctrination and water management program shall be conducted by a qualified full-time local representative.

B. Water Quality Analysis:

1. Water Treatment design shall be based on an independent city water analysis performed within the last three months.

C. Installation of Owner supplied electrical Pulsed Power water treatment equipment in compliance with:

1. OSHA recognized North American Testing Laboratory (NRTL) standards and bearing a “Registered Certification Mark” on the assembly with endorsements for USA and Canada affixed on the equipment. Certification marks identifying UL, CSA, and ETL are to be considered equivalent.
2. US Federal Communications Commission CFR 47(FCC) PART 18, 2006 for radiated emissions
3. US EPA registration as pesticide, device or active ingredient producing establishment

1.4 SUBMITTALS

A. Refer to Specification Section 15010 – Submittals

B. Submit drawings, specifications and installation requirements pertaining to:

C. Product Data: Include rated capacities; water pressure drops; shipping, operating and installed weights; and furnished products listed:

1. Installation of Owner supplied Dolphin WaterCare™ Pulsed Power Water Treatment Equipment for four chillers.
2. Installation of Owner supplied controllers, bleed valve, related equipment and devices
3. Water treatment automation equipment

D. Shop Drawings: Detailed equipment assemblies indicating dimensions, weights, electrical loads, accessories, and location and size of field connection. Produce detailed diagrams for:

1. Field power and control wiring for equipment TDS sensors and controllers.
2. Field piping schematics for control loop
3. Field piping schematics for blow down/bleed piping
4. Process control diagrams for accessories and controllers

E. Raw Water Analysis: Submit a copy of the project site water analysis to document the water quality available at the project site. Raw water test analysis shall include at a minimum the analysis of the following compositions of the water:

1. Calcium Hardness (as ppm CaCO3)
2. Total Hardness (as ppm CaCO3)
3. Total Alkalinity or m-Alkalinity (as ppm CaCO3)
4. pH
5. Silica (as SiO2)
6. Specific Conductivity (μS/cm)
7. Sulfate (as SO4)
8. Chloride (as Cl^-)
9. Phosphate (as PO4)

F. Installation, Maintenance and Operation data for each piece of equipment, suitable for inclusion into a standard 3-ring binder shall be submitted in quantities specified in the General Conditions.

G. Material Safety Data Sheets: Water treatment provider shall submit MSDS for all products used which are covered under the OSHA MSDS Program.

1. Control system and remote communications system, including interaction with or incorporation in the central plant distributed control system.
2. All water treatment equipment to be used.
3. Manufacturer's concurrence to the proposed treatment system and chemicals, pertaining to their equipment
4. Recommendations and procedures for chemical cleaning and flushing of systems prior to placing them in service
5. Description of water treatment program for each system based on the chemical water analysis. Include information on chemicals to be used, residuals to be maintained (ppm) and anticipated chemical usage and cost, for each system.

H. The contractor shall submit references (including facility, contact person and phone number) for similar facilities being serviced. This shall include separate listings for facility start-ups, accounts less than six months old, accounts six months to two years old, and accounts older than five years.

I. The contractor shall submit the name and resume of the water treatment representative that will service the account.

J. After award of the contract, the contractor shall submit operation, maintenance, and training manuals, which will contain information on all equipment, chemicals, the water treatment program for each system including chemical control parameters and guidelines, and the testing methods and procedures.

K. Shop Drawings: Submit shop drawings on complete system describing equipment,

apparatus, material, and application of treatment. Include wiring diagrams for electrically operated apparatus or equipment.

1.5 REFERENCES

A. ASTM G4-01(2008) Standard for Conducting Corrosion Coupon Tests in Field Applications

B. CTI Code STD-149(00) Corrosion Testing Procedures, Corrosion Coupon Testing and Test Devices

C. OSHA Regulations Standards - 29CFR, PART 1900, Standard 1200, Toxic and Hazardous Substances (MSDS)

D. SMEWW (2004) – Standard Methods for the Examination of Waste Water,

E. US Federal Communications Commission CFR 47(FCC) PART 18, 2006 for radiated emissions

F. US Environmental Protection Agency (EPA) FIFRA compliance as per 7 U.S.C. SS 136e and US EPA compliance as per 40CFR PART 167

G. US EPA – EPP - Environmentally Preferred Purchases included in Executive Order 13423 – Strengthening Federal Environmental, Energy, and Transportation Management

1.6 QUALIFICATIONS:

A. Equipment Manufacturer:

1. Shall be able to document a minimum of 10 years experience designing, manufacturing and supplying products for commercial and industrial water treatment and water chemistry control.
2. Shall maintain engineering and field service capabilities to ensure proper operation of the product within the service period specified in subsequent sections.
3. Shall be able to document the program equivalent to “Dolphin Oversight” project management for the first year of operations including:
   a. Assurance of manufacturer examination service reports
   b. Program for noting deviations reported
   c. Lines of responsibility for corrective actions to cure deviations
   d. Shall be registered with the US EPA registration as pesticide, device or active ingredient producing establishment.

1.7 WARRANTY:

A. Manufacturer’s standard form warranty of not less than one year from date of start-up covering replacement or repair of materials found to be defective in workmanship or quality.

1.8 EXTRA STOCK

A. Chemicals: Provide a supply of treatment chemicals sufficient for one year of operation or as specified in each section.

PART 2 - PRODUCTS

2.1 ACCEPTABLE EQUIPMENT & MANUFACTURERS

A. The water treatment service company shall be ISO 9000 certified as a recognized specialist active in the field of industrial water treatment. The contractor shall have regional water analysis laboratories, development facilities, and a service department located within the trading area of the job site. The contractor shall provide the aforementioned certification and documentation.

B. Specific treatment system and chemicals must be approved by the equipment manufacturer supplying equipment requiring the water treatment.

C. Chemical Pot Feeders shall be:

1. Acme
2. Penn
3. Wagner or equal

2.2 EVAPORATIVE COOLING WATER LOOP SYSTEMS

A. The contractor shall furnish and install Electronic Pulsed Power Water Treatment System as shown and detailed on the contract documents. The units shall be installed in accordance with this specification Section, and perform at the conditions as listed.

B. Electronic Pulse Power water Treatment System

1. Approved manufacturer:
2. Dolphin WaterCare Div. of Clearwater Systems Corporation, Essex, CT, or equal
3. Provide a complete Pulse Power Water Treatment System Equal to the Dolphin WaterCare™ System 3000 on:
4. Cooling Tower – Condenser Water Loops (Chiller – Tower Loops) Dolphin WaterCare™ System Model G3060-PVC

C. Shall consist of a components delivering alternating current pulse power from a Signal Generator panel to a Treatment Module piping assembly via an Umbilical Cable. Each Treatment Module assembly shall be equipped with a dedicated individual Signal Generator panel.

1. Dolphin System™ functions:
   a. To keep system free from mineral scale on the fill material, pipes, heat exchangers, pipes, valves and other components in the system by changing calcium carbonate nucleation from surface nucleation to colloidal nucleation, thereby lowering activation energy of colloidal nucleation.
   b. To control the population of microorganisms such as bacteria to 10,000 CFU/ml or below, by incorporation into colloidal precipitates (encapsulation) or through the pulsed power fields (electroporation) within the coil pipe assembly, regardless of what species are present and how they may have mutated.
   c. Blowdown shall contain no added water treatment chemicals required to achieve performance listed.
2. Signal Generator shall have:
   a. Wall mounted a minimum of NEMA 3R metal enclosure, 304 brushed stainless steel case. Painted enclosure is not acceptable.
   b. Terminal block for hard wiring to electrical power service.
   c. Fused primary on 208-230 V/1ph.
   d. Dry form C contact (for building management system).
   e. Remote Start-Stop capability, switch field installed provided by others
   f. Female locking receptacle for connecting the Signal Generator to the Treatment Module. Connection coded based on unit size to prevent mismatching of components
   g. LED Status indicating lights
   h. Powered Fan ventilation with inlet screen filter
   i. Pulsed power transformer and circuitry, which through a single set of coils uses alternating current of 60 cycles per second combined with over layered high frequency pulse signal to create a harmonic “ringing” signal of increasingly higher frequency until the decreasingly lower amplitude of this echo signal is damped down to zero. This effect imparts high frequency electric fields into the flowing water that includes frequencies in the kilohertz and megahertz range.
   j. A total of 240 pulses per second shall be provided.
   k. Devices which separately generate the high and low frequency signals shall not be acceptable.
   l. Devices which utilize separate sets of coils to independently receive the high and low frequency signals shall not be acceptable.
3. Primary service:
   a. 1” thru 6”: 208-230 VAC, 60 cycle, 1 ph, primary service.
4. Treatment Module shall have:
   a. PVC Sch. 80 with PVC Flanges
   b. The Coils contained within a larger diameter PVC covering cylinder around the pipe and closed with PVC end caps with ventilation ports.

c. Equipment requiring field modification by addition of ventilation or weep holes shall not be approved
d. Integral Umbilical Cable for connection between the Treatment Module and the locking fitting on the Signal Generator.
e. Built in thermal protection which shall automatically turn the Treatment Module to the OFF status when the operating temperature exceeds 200° F.

5. Building Management System Interface within the Signal Generator Panel:
   a. The interface to the building management system shall be through a FORM “C” dry relay contact located on the circuit board in the Signal Generator.
   b. The interface shall verify the following Dolphin operating status conditions
   c. Primary Power Status - e.g. Loss of utility power, tripped circuit breaker, blown fuse or unit unplugged.
   d. Secondary Power Status - e.g. Severed or removed coil assembly cable connection, defective transformer.
   e. Treatment Module Operation Status - e.g. coil overheated.
   f. Circuit Board Operation Status – e.g. Board overheated, electronic failure
   g. In the event of one of the above anomalies, the supervisory contact shall change relay status.
   h. Supervisory Contact power rating
   i. 0.6 A at 125 VAC
   j. 0.6 A at 110 VDC
   k. 2.0 A at 30 VDC
6. Remote Start-Stop capabilities within the Signal Generator from external switch furnished by others:
   a. Shall turn off the Dolphin Treatment Module, while maintaining power to the Signal Generator.
   b. Status shall be indicated by a flashing green LED
   c. Switch shall be wired into predetermined contacts in the Signal Generator.
   d. 24v rated normally closed switch shall be provided by others.
   e. Packaged Conductivity Meter/Controller: Provide a Conductivity meter/controller equal to Pulsafeeder MicroVision with electrodeless sensor
   f. Provide NEMA 1 enclosure
   g. Provide 115 volt, single phase power plug cord
   h. LCD Display for set point and actual conductivity readout, Solid-state circuitry, 5 percent accuracy,
   i. Furnish with 4-20mA output configured to conductivity reading output
   j. Control function lights, 120v/1ph output to control motorized bleed valve.
   k. Furnish with preassembled conductivity sensor in SCH 80 PVC Tee, PVC socket weld connections with preassembled cable connector to conductivity meter/controller.
   l. Conductivity sensor-probe shall be electrodeless. A contact-type electrode sensor shall not be accepted.
   m. Furnish with optional flow switch to disable motorized bleed valve when pumping system is off.
7. Blow down or Bleed Valve:
   a. Blowdown Solenoid valve or motorized ball valve equal to Belimo B2AF120, 115volt, single phase:
   b. Furnish cord with plug to connect to “Bleed” receptacle of the conductivity controller.
   c. Furnish with watertight cover to maintain NEMA 3R if installed outdoors.
   d. Install valved bypass around blowdown valve for servicing and emergency manual blowdown operation.
   e. Do not install strainer(s) in blowdown line.
   f. Install throttling valve downstream of the blowdown valve to make adjustments in blowdown volume rate if required.

2.3 CHEMICALS

A. All chemicals used shall be environmentally safe and acceptable to the EPA, FDA, USDA,

AHA, California State, City of Sacramento, and County of Sacramento.

B. All chemicals used shall be acceptable to the various equipment manufacturers.

C. Provide the following chemicals in the chemical feed system:

1. Closed Recirculation Systems: Baker Hughes BPC68190 corrosion inhibitor (50 ppm) scale prevention agent, and pH buffer.

2.4 COOLING TOWER WATER TREATMENT PERFORMANCE REQUIREMENTS

A. Cleaning and Flushing of condenser water piping systems.

1. Water used for hydrostatic testing shall be drained from the system to be cleaned.
2. Prior to placing the water system in operation, the entire water system shall be cleaned and flushed in accordance with the manufacturers written recommendations, using DuBois Met-All Terj or Liquid 422 or equivalent.
3. Following the pre-cleaning procedures, pre-filming procedures are to be carried out according to the specifications using DuBois Passivate Plus PBB or equivalent product, following guidelines per package instructions.

B. Water Treatment for Evaporative Cooling Water Loop Systems

1. Maintain water quality for HVAC systems that controls corrosion and build-up of scale and biological growth for a maximum efficiency of installed equipment without posing a hazard to operating personnel or the environment. Maintain the following operational water quality parameters:
2. Total Planktonic Bacteria Count (TBC) of less than 10,000 CFU/ml as determined by Heterotrophic Plate Count (HPC) under method SMEWW 9215B (2004) at 35degC for 48 hours using plate count agar (tryptone glucose yeast agar) per Section 9215A.6;
3. Uniform mild steel corrosion of not more than 5 mils per year (mpy) as determined by minimum of 90 day corrosion coupon exposure per ASTM G4-01(2008) ;
4. Uniform copper corrosion of not more than 0.35 mpy as determined by minimum of 90 day corrosion coupon exposure per ASTM G4-01(2008);
5. No scale formation on immersed surfaces including Tower Basins, Tower Fill, Tower Sumps, Piping, Heat Exchanger Tubes;
6. Tower Basins, Tower Fill, Tower Sumps, Piping, Heat Exchanger Tubes;
7. Water shall be odorless and clear in appearance with no turbidity;
8. No surface slime layer formation on immersed surfaces as judged by touch;
9. Operational bleed or blow down shall be chemical-free and additive-free.
10. The base performance requirements on quality of raw water available from the project site, HVAC system equipment material characteristics and functional performance characteristics, operating personnel capabilities, and requirements and guidelines of authorities having jurisdiction.

2.5 SERVICES AND PRODUCTS

A. Suppliers: Treatment equipment, apparatus, materials, and services shall be as supplied chemical treatment specialist.

B. Temporary Pumps and associated equipment shall be provided by the mechanical contractor.

C. New pumps installed for this project shall not be used for circulation during chemical treatment process. Contractor shall provide all necessary temporary pumps, temporary electrical, and associated equipment required.

1. Chilled water for Absorption Chiller shall be as shown on the drawings; as recommended by chemical treatment representative.

2.6 CLOSED RECIRCULATION SYSTEMS

A. Closed recirculation systems shall include the following:

1. Heat Recovery Loop and heat exchangers
2. Space Heating Loop and heat exchangers
3. Hot Water Loop in Absorption Chiller
4. Chilled water piping system and water chillers for the Absorption Chiller (part of the

Central Plant Chilled Water Loop.

B. General: Installation of Owner provided equipment for a complete system including pot feeders for the chemical treatment of aforementioned systems.
   1. Provide compound suitable for makeup quality and makeup rate which will not cause or enhance bacteria/corrosion problems or mechanical seal failure due to excessive total dissolved solids.
   2. Maintain inhibitor residual as determined by the water treatment laboratory, taking into consideration residual and temperature effect on pump mechanical seals.

C. System Protection:
   1. Protect various wetted and coupled materials of construction including ferrous and nonferrous metals.
   2. Maintain system essentially free of scale, corrosion and fouling.
   3. Corrosion rate of following metals shall not exceed the following mils per year penetration:
      a. Ferrous, 5.0 mpy
      b. Brass, 1.0 mpy
      c. Copper, 1.0 mpy
   4. Inhibitor shall be stable at equipment skin surface temperature and bulk water temperatures of not less than 250 degrees F and 125 degrees F, respectively.

PART 3 - EXECUTION

3.1 PREPARATION

A. Coordination: Examine the drawings and installation of each system to be treated; note extent, materials, etc. Coordinate location and installation of treatment system connections and apparatus with the installer of the systems being treated.

B. Mechanical contractor shall provide all necessary bypass piping to allow circulation during chemical treatment process.

C. Mechanical contractor shall provide all required point of connections to piping to allow connection to temporary pumps provided as mentioned above for flushing.

D. Other:
   1. Supply all material and labor requisite to timely execution of this work.
   2. Cleaning of strainers and installation of chemical treatment equipment shall be provided by the mechanical contractor.
   3. Insure that all piping systems affected have been flushed and cleaned as specified in Section 1561015510 HVAC Piping.
   4. Mechanical Contractor is to remain on site at all times during the chemical treatment process

3.2 INSTALLATION/OPERATION OF DOLPHIN SYSTEM

A. Install equipment level and plumb. Locate panels with indicator lights at eye level.

B. Install equipment per manufacturer's recommendations.
   1. Locate Dolphin System™ components according to manufacturer's recommendation.
   2. Locate Treatment Module in piping no closer than 3 ft from sources of turbulence such as the pump outlet. Consult manufacturer should field conditions fail to meet such clearances.
   3. Signal Generator and Treatment Module should be located at least 3 ft. from additional Dolphins and 3 ft. from any large motor, pump, or high voltage equipment or source which may influence the Dolphin System™ high frequency electric fields.
   4. Both the Signal Generator and Treatment Module should be installed at least 3 ft. from any motor, pump or high voltage equipment which might influence the Dolphin high frequency electromagnetic field. This includes other Dolphins.

C. Mounting and Support:

1. Treatment Module should be supported by pipe hangers located no closer than 2” to the outer cover.
2. Do not support or secure the Treatment Module by means of the outer cover.
3. Do not install bands, hangers, wires, hooks around the outer cover.
4. Do not cut or reduce length of the Treatment Module without prior approval of the manufacturer.

D. Treatment Module should not be energized for extended periods of time without having the pipe full of water. If the flow in the pipe will drain when the pumps are off, then the Dolphin shall be de-energized utilizing supervisory contacts to the Dolphin System™.

E. Cleaning of piping systems containing the Dolphin System:

1. Immediately after hydrostatic testing of piping is completed, systems shall be cleaned, drained, and flushed with clean water.
2. If the system is not immediately put into operation after cleaning and flushing, the system shall be drained of any stagnant water left over from testing or flushing. Immediately prior to putting the Dolphin System into operation, the system shall be re-filled with clean water.

F. Initial System operation:

1. No water system containing a Dolphin System shall be put into operation without the Dolphin being energized and the blow down system fully operational. Failure to comply may result in damage to connected heat exchange equipment from scaling and corrosion, or fouling from biological growth.
2. The Dolphin System™ water treatment program should initially be operated under blow down settings or protocol specified by Clearwater. New galvanized towers must be conditioned to prevent white rust formation to the tower manufacturer’s requirements. Operating the tower for a period of about 6 weeks with a pH below 8.3 accomplishes this conditioning. After this conditioning period, the tower may operate at normal pH levels. Controlling this pH may require a higher blow down rate for this 6-week period.

3.3 CONNECTIONS

A. Piping installation requirements are specified in other Division 15 Sections. Drawings indicate general arrangement of piping, fittings, and specialties.

B. Install piping adjacent to equipment to allow service and maintenance.

C. Size and install the control loop piping to conductivity and optional sensors and/or corrosion coupon racks in the size PVC to match fittings provided. Install field provided full port ball valves for isolation of sensors and racks for routine maintenance. Control loop sensors shall not be installed directly in the piping mains.

D. Control loop shall be piped from the pressure side of the recircualtion pump to the suction side of the pump, so that the control loop senses the highest temperature of the fluid system. Pipe from side of main to minimize dirt and air introduction to the control loop sensors and piping.

E. Blow down/bleed line should not be attached to the control loop. Install the blow down/bleed line on the pressure side of the recircualtion pump, preferably from the bottom of the pipe to relieve the system of accumulated solids, dirt, and debris.

F. Confirm applicable electrical requirements in Division 16 Sections for connecting electrical equipment. Power and control and interlock wiring materials and labor provided by Division 16.

3.4 FIELD QUALITY CONTROL

A. Engage a DuBois-Dolphin Total WaterCare™ service representative to perform startup service.

1. Inspect field-assembled components and equipment installation, including piping and electrical connections. Report results in writing.
2. Inspect piping and equipment to determine that systems and equipment have been

cleaned, flushed, and filled with water, and are fully operational.

3. Place HVAC water-treatment system into operation and calibrate controls during the preliminary phase of HVAC systems' startup procedures.

B. Initial Start-up Service – At no additional cost to the owner, a Certified or Authorized Dolphin WaterCare™ Representative shall set up the blowdown system. An Initial Start-up Service report shall be provided to the operator and to Clearwater Systems.

C. Train Owner's maintenance personnel on procedures and schedules for starting and stopping, troubleshooting, servicing, and maintaining equipment and schedules.

D. Review data in maintenance manuals, especially data on recommended parts inventory and supply sources and on availability of parts and service. Refer to Division 1 Section "Closeout Procedures."

E. Schedule at least four (4) hours of training with Owner, with at least seven days advance notice.

F. Coordinate installation of mechanical equipment, electrical hook-up, instrumentation and control equipment with SMUD representative and applicable trade contractors. Equipment provided shall interface with the building control system to the maximum extent possible.

3.5 START-UP OF CLOSED LOOP HOT WATER SYSTEM

A. System cleaning and flushing: Provide chemicals for and coordinate with applicable trades for cleaning and flushing all piping systems and all related equipment. Systems shall be flushed until total alkalinity of rinse water is equal to makeup water. For galvanized equipment, pretreatment must consist of non-alkaline, non-acid liquid passivator and cleaner.

B. Conduct performance tests to verify capacity and performance of the chemical feed equipment and control systems, prior to start-up and acceptance of any mechanical system receiving water treatment. Provide documentation.

C. Provide chemicals, dosage estimates, and supervision necessary to place all systems requiring chemical treatment in service. Monitor systems and make feed adjustments to bring all parameters into correct operating range. Adjust control systems for automatic operation.

D. Performance Test Report: Submit written report of the test results to the Architect.

3.6 INDOCTRINATION

A. Training: Provide four hours of training to the Owners operating personnel, instructing them clearly and fully on the installation, care, maintenance, testing, and operation of the water treatment systems.

B. Other: Provide the Owners personnel with:

1. Two copies of each appropriate data sheet on apparatus, equipment, and chemicals.
2. An appropriate supply of record charts and log sheets for their use.

END OF SECTION

SECTION 15632 - CIRCULATING WATER FILTRATION SYSTEM

PART 1 - GENERAL

1.1 RELATED DOCUMENTS

A. The requirements of the GENERAL CONDITIONS, SUPPLEMENTARY CONDITIONS, and DIVISION 1 GENERAL REQUIREMENTS, apply to the work of this section.

1.2 DESCRIPTION

A. This section specifies cleaning and treatment of circulating HVAC water systems, including the following:

1. Tower Cooling Water

1.3 QUALITY ASSURANCE

A. Technical Services: Provide the services of an experienced water treatment specialist or technical representative approved by the Water Treatment System Manufacturer to direct flushing, cleaning, pre-treatment, training, debugging, and acceptance testing operations; direct and perform chemical limit control during construction period.

1.4 SUBMITTALS

A. Submit in accordance with Section 15020 Submittals.

B. Manufacturer's Literature and Data including:

1. Filtration skid including sand filter, pump, PLC controller and automatic valves.
2. Sweeper jet system for cooling tower solids removal, if provided, including installation drawings and operating instructions.

PART 2 - PRODUCTS

2.1 GENERAL

A. The Contractor shall furnish and install a Sand Filter System as shown and detailed on the contract documents. All components of the system provided will be manufactured and supplied by a single company.

2.2 BYPASS SAND FILTER SYSTEM

A. Provide an integrated Bypass Sand Filter System treatment skid equal to the SF-42CS-HH manufactured by Griswold Water Systems of Corona, CA or an approved substitution.

B. System Description:

1. The Bypass Filtration System will remove up to 95% of suspended solids 10 microns and larger circulating in the HVAC water circulation system with standard No. 20 Silica Sand Media (Other Media is available by special order).
2. For Cooling Tower Basin Water, the system will include a self-contained, skid mounted Sand Filter System.
3. Calculated flows shall be at 80 Feet Total Dynamic Head to provide pressure drop required for the separator as well as the 20 PSIG pressure required for the sweeper system eductors and nozzles. header designed and approved by the Sand Filter Manufacturer.
4. Backwash will be with City Water.

C. Sand Filter System:

1. Sand Filter System will be factory-assembled with one source of supply and warranty for all parts and components. System shall include the following items and features.
   a. Filter tank shall be sized for 20 gpm/sq.ft. of filter bed surface.
   b. Filter media will be provided for field installation into tank.
   c. Inlet and Outlet Pressure gauges and differential pressure switch.

d. End suction pump and motor package.
e. Prewired control panel with PLC automatic backwash control.
f. Top Service Port
g. Automatic and manual air relief valves.
h. Removable under drain stainless steel wedge-wire screens.
i. Automatic electric operated backwash valves.

2. Tank shall be constructed with high quality carbon steel.
   j. Steel tanks shall be rated for a maximum working pressure of 80 psig at 100°F.
3. System Pump shall be end suction, close coupled, cast iron type with bronze impeller and TEFC motor with 1.15 service factor. Mechanical seal shall be Carbon, Silicon Carbide Viton™ type.
4. Control panel shall be in a NEMA 4 watertight powder coated enclosure suitable for outdoor installation. Fiberglass Enclosures are not acceptable.
5. Lateral/Under Drains shall be of 316 stainless steel wedge wire screen in the carbon steel and stainless steel tanks.
6. Cast Iron Basket Strainer with ¼" perforated 304 stainless steel internal screen and quick opening cover shall protect pump inlet.
7. Piping shall be Schedule 80 PVC with exterior enamel finish.
8. Frame shall be carbon steel with exterior powder coat finish.

PART 3 - EXECUTION

3.1 TESTING

A. Provide a factory-authorized service representative to perform startup service for the Sand Filtration System.

1. Inspect field-assembled components and equipment installation, including piping and electrical connections. Report results in writing.
2. Inspect piping and equipment to determine that systems and equipment have been cleaned, flushed, and filled with water, and are fully operational.
3. Place HVAC water filtration system into operation and check sweeper jets, if installed for proper orientation in the tower basin during the preliminary phase of HVAC systems' startup procedures.
4. An Initial Start-up Service Report shall be provided to the operator and the Manufacturer by field service technician.

B. No water system using a Sand Filtration System shall be put into operation without the Sand Filtration System being energized and fully operational.

3.2 TRAINING

A. Provide a factory-authorized service representative to train SMUD's maintenance personnel to adjust, operate, and maintain Sand Filtration System and equipment.

B. Train SMUD's maintenance personnel on procedures and schedules for starting and stopping, troubleshooting, servicing, and maintaining equipment and schedules.

1. Schedule at least two (2) hours of training with SMUD.
2. Provide at least seven days' advance notice.

END OF SECTION

SECTION 15687 - PACKAGED HERMETIC CENTRIFUGAL LIQUID CHILLER

PART 1 - GENERAL

1.1 SYSTEM DESCRIPTION

A. Microprocessor-controlled 500 ton (nominal) liquid chiller shall use a single stage, semi-hermetic centrifugal compressor using refrigerant HFC-134a, or HFC-123.

B. The manufacturer shall include in the chiller price:

1. Refrigerant cooler and condenser
2. Centrifugal compressors
3. Electric Motors
4. Charge of refrigerant and oil, if the chiller uses oil.
5. Control and instruments
6. Zero emission purge unit capable of operating even when the chiller is not operating.

C. Failure of the Bidder to submit drawings and engineering data on or before the dates specified shall be considered a breach of contract and may be considered reason for termination of the Contract if SMUD so desires.

D. Manufacturer's Field Service. The Bidder shall furnish the services of a competent, experienced, authorized manufacturer's field service representative who shall perform the following:

1. Provide service normally furnished with the equipment and as required to assure installation in accordance with the warranties and guarantees specified herein.
2. Provide service as required to correct manufacturing errors.
3. Provide technical assistance as required by SMUD during the period when piping, electrical and controls are being connected to the equipment.
4. Provide technical assistance during startup, initial operation, and testing of the Centrifugal Chiller equipment as required by SMUD.

E. The number of day’s attendance of the manufacturer's field representative at the job site and the number of round trips to the site included in the lump sum prices shall be indicated in the Proposal. This shall include sufficient time to cover all the services specified in these documents. Adjustments will not be made in the payment due the Bidder for total days at the job site in excess of the days stated in the Proposal.

F. If SMUD requests additional supervisory assistance for items not specifically covered herein, it shall be furnished in accordance with the per diem rate stated in the Proposal.

G. Signed service reports verifying the tests and work performed, errors corrected, and the state of the equipment readiness at the times of inspection shall be submitted to SMUD upon completion of any manufacturer's supervision. The service reports may be in letter form on special forms furnished by the manufacturer.

H. Miscellaneous Materials and Services. Miscellaneous materials and services not otherwise specifically called for shall be furnished by the Manufacturer in accordance with the following:

1. Supply of initial charge of new refrigerant. Provide all necessary hoses, equipment and labor to load into machine after field assembly and successful field pressure test as per ASHRAE 15 Field Pressure Tests.
2. All nuts, bolts, and gaskets between components and equipment furnished under these specifications.
3. All piping integral to or between any equipment furnished under these specifications, except as otherwise specified. This shall include piping, isolation valves, pressure gages, and thermometers for the gear oil and compressor oil heat exchangers (both sides).
4. All necessary connections for SMUD's piping and instrumentation.
5. All necessary instrument, power and control wiring integral to any equipment furnished by the Bidder. This shall include terminal blocks and internal wiring to these terminal blocks for equipment requiring external connection. All wiring and controls shall be installed in conduits or tubing.

6. Hangers and supports for piping, conduit, tubing, and equipment furnished under these specifications supported off the chiller, including miscellaneous steel. Piping, conduit, and tubing shall be arranged in a neat and orderly manner.
7. Lubricants for the compressor, gear, motor, and other accessories.
8. All auxiliary equipment necessary for the operation of the chillers (excluding condenser and chilled water pumps) shall have the motor starters and fusible disconnects as well as control wiring - provided, installed, and wired by the original equipment manufacturer.

I. The Bidder shall provide a service and maintenance contract for a period of one year from start of beneficial use.

J. SMUD reserves the right to award the contract based on equipment efficiency, cost, and overall space requirement.

1.2 DEFINITIONS

A. The term "Manufacturer" as used in this specification, shall mean the Manufacturer of the packaged hermetic or semi hermetic centrifugal liquid chiller.

B. The term "Vendor" as used in this specification, shall mean the Vendor of the packaged hermetic or semi hermetic centrifugal liquid chiller.

C. The term "Purchaser" as used in this specification shall mean SMUD and its authorized representatives.

D. The term "Packaged hermetic or semi hermetic centrifugal liquid chiller" as used in this specification shall mean one unit, consisting of a Microprocessor-controlled liquid chiller shall use a single stage, hermetic or semi-hermetic centrifugal compressor using refrigerant HFC-123, or HFC-134a and associated equipment, systems, controls, instrumentation and protective devices necessary to meet the requirements of this Specification. Reference Section 1.1.

E. The term "Bidder" shall mean anyone who submits a proposal in response to this specification.

1.3 REFERENCES

A. All work and design and construction of the packaged hermetic centrifugal liquid chiller shall conform to the requirements of the specifications and standards of the following:

1. Published Specifications' standards, tests or recommended methods of trade, industry or governmental organizations apply to work in this Section.
2. Comply with all applicable national, state and local codes.
3. In addition, comply with all standards or associations as specified herein, including, but not limited to, the following, as applicable:
   a. American Refrigeration Institute (ARI)
      1) ARI STANDARD 550-98 - Centrifugal or Rotary Water Chilling Packages.
      2) ARI STANDARD 575 - Method of Measuring Machinery Sound Within Equipment Rooms.
      3) ARI STANDARD 740 -1993 Refrigerant Recovery / Recycling Equipment.
   b. American Gear Manufacturer's Association (AGMA)
   c. American Friction Bearing Manufacturer's Association (AFBMA) 9 - Load Ratings and Fatigue Life for Ball Bearings.
   d. American Institute of Steel Construction (AISC)
   e. American National Standards Institute (ANSI)
   f. American Society of Mechanical Engineers (ASME)
      1) ASME SEC VIII - Boiler and Pressure Vessel Code.
      2) ASME B31.5 - Refrigerant Piping.
   g. American Society of Testing and Materials (ASTM)
   h. American Society of Heating, Refrigerating and Air Conditioning Engineers (ASHRAE)
      1) BSR/ASHRAE STANDARD 15-1994 - Safety Code for Mechanical Refrigeration.
      2) STANDARD 34 - Number Designation and Safety Classification of Refrigerants.

i. American Welding Society (AWS)
j. Local Building Codes
k. Local Electrical Code
l. Factory Mutual (FM)
m. Institute of Electrical and Electronic Engineers (IEEE)
n. Instrument Society of America (ISA)
o. 2007 National Electrical Code (NEC), 2007 California Electrical Code and all Authority Having Jurisdiction (AHJ) code interpretations.
p. National Electrical Manufacturer's Association (NEMA)
q. National Fire Protection Association (NFPA)
r. Occupational Safety and Health Administration (OSHA)
s. Steel Structures Painting Council (SSPC)
t. Underwriters Laboratory (UL)
u. Engineering Testing Laboratories (ETL)
v. Uniform Building Code (UBC)

1.4 SUBMITTALS

A. Proposal Data

1. Provide five (5) sets of complete equipment performance data and information for interfacing with construction, supports and related facilities to permit proper bid evaluation and simultaneously, in the event of purchase, sufficient data to expedite the processing of the Purchaser's order and the design and construction of the receiving facilities. The proposal shall include bid evaluation data that accomplishes this purpose with certified shop drawings to follow.

B. Product Data: Submit the Manufacturer's catalogue cuts indicating rated capacities, weights, specialties and accessories, electrical requirements and wiring diagrams. Include, as a minimum, the following information:

1. Capacity in tons at scheduled conditions.
2. Power consumed at design duty (kW).
3. Performance data indicating energy input versus cooling load output from 20 to 100 percent of full load with condenser water relief per ARI.
4. Performance date indicating energy input versus cooling load output at 100% capacity with the coldest condenser water that the chiller is capable of operating at.
5. Stability data with constant entering condenser water temperature down to 20% load.
6. Impeller speed (RPM), sound level per ARI 575-87 (dB), number of sets of inlet guide vanes, amount of refrigerant charge (lbs.), and amount of oil required (lbs.).

C. Bid Evaluation Data:

1. Packaged hermetic centrifugal liquid chiller performance data including but not limited to: ambient design conditions, heat duty, tube-side pressure drop, fluid properties; utility requirements including electrical power, water and predicted noise limits.
2. Layout drawings for the packaged hermetic or semi hermetic centrifugal liquid chiller and ancillary equipment showing dimensions; required clearances; weight loading and structural, mechanical and electrical interconnections.
3. Packaged hermetic or semi hermetic centrifugal liquid chiller description, catalog cuts, fluid specifications, warranty, terms and conditions, delivery schedule and proposed maintenance agreement.
4. A complete listing of any exceptions taken to this specification.

D. Shop Drawings and Installation Manual

1. Provide five (5) hard copy sets plus electronic copies (drawings shall be AutoCAD 2000 compatible) of the following:
   a. Packaged hermetic or semi hermetic centrifugal liquid chiller installation drawings.
   b. Packaged hermetic or semi hermetic centrifugal liquid chiller foundation loading and anchor bolt location drawings.
   c. Installation drawings for the packaged hermetic or semi hermetic centrifugal liquid

chiller and ancillary equipment.

d. Installation manual.
e. Piping and instrumentation diagrams for the packaged hermetic or semi hermetic centrifugal liquid chiller.
f. Bill of Materials for the packaged hermetic or semi hermetic centrifugal liquid chiller.
g. Data sheets and drawings.
h. Electrical interconnect diagrams.
i. Electrical schematics.
j. Electrical wiring diagrams.
k. Controls software documentation.
l. Utility Requirements.

E. Operation and Maintenance Manuals

1. The successful bidder will provide five (5) hard copy sets plus one (1) electronic copy of the Operation and Maintenance Manuals.
2. The manuals shall include a table of contents, specifications, drawings and descriptions of equipment; installation instructions; operating instructions; maintenance instructions; illustrated parts lists and test data and performance curves. The table of contents shall be marked with the Purchaser's name, project name, equipment name and Purchaser's purchase order number.
3. The manuals shall include operation and maintenance data for all sub-vendors.
4. Drawings and data in the manuals shall be for the as-shipped configuration.
5. The information in the manual shall include a list of recommended spare parts and a schedule of required lubricants, as recommended by the Manufacturer. The data shall also include all nameplate information and shop order numbers for each item of equipment and component thereof.
6. Service manuals shall be identical to those used by the Manufacturer's and Vendor's field service technical staff for all service and repair procedures.

1.5 QUALIFICATIONS

A. Manufacturer shall specialize in the manufacture of the product specified in this Section.

B. Unit shall be Manufacturer's standard product, designed and manufactured in accordance with appropriate industry standards.

C. The Manufacturer shall have at least two (2) years of proven experience in production of the proposed unit.

D. The Manufacturer shall have at least fifty (50) units of equal or comparable design in continuous duty service for a minimum of one (1) year.

E. The Vendor shall be an authorized distributor of the Manufacturer.

1.6 QUALITY ASSURANCE

A. Chiller performance shall be rated in accordance with ARI Standard 550-98 code for rating and testing of centrifugal and rotary chillers, latest edition

B. Equipment and installation shall be in compliance with ANSI/ASHRAE 15 (latest edition)

C. Cooler and condenser refrigerant side shall include ASME "U" stamp and nameplate certifying compliance with ASME Section VIII, Division 1 code for unfired pressure vessels.

D. Chiller shall be designed and constructed to meet UL and UL, Canada requirements and have labels appropriately affixed.

E. Conform to ASME B31.5 for refrigerant piping.

F. Centrifugal compressor impellers shall be dynamically balanced and over-speed tested by the manufacturer at a minimum of 120% design operating speed. Each compressor assembly shall undergo a mechanical run-in test to verify vibration levels, oil pressures, and temperatures are within acceptable limits. Each compressor assembly shall be proof tested at a minimum 204 psig (1406 kPa) and leak tested at 185 psig (1276 kPa) with a tracer gas mixture.

G. Entire chiller assembly shall be proof tested at 204 psig (1406 kPa) and leak tested at 185 psig (1276 kPa) with a tracer gas mixture on the refrigerant side. The water side of each heat exchanger shall be hydrostatically tested at 1.3 times rated working pressure.

H. Conform to BSR/ASHRAE STANDARD 15-1994 code for construction and operation.

I. Unit shall bear the ARI Certification Label for Centrifugal/Rotary Water-Cooled Chillers as applicable.

J. Unit and ancillary equipment shall comply with 40 CFR Part 82 Protection of Stratospheric Ozone; Refrigerant Recycling: Final Rule.

K. The supplier shall certify that all materials or components used in the chillers shall not contain PCBs, asbestos, or lead paint.

L. Prior to shipment, the chiller automated controls test shall be executed to check for proper wiring and ensure correct controls operation.

M. The chiller and starter shall be factory wired and tested together to verify proper operation prior to shipment.

1.7 VERIFICATION OF CAPACITY AND EFFICIENCY

A. All proposals for chiller performance must include an ARI approved selection method for the specified refrigerants. Verification of date and version of computer program selection or catalog is available through the Vice President, Engineering, ARI (703) 524-8800.

B. The chiller shall be factory performance tested with the proposed refrigerant under full load conditions in an ARI certified test facility. The manufacturer shall supply a certified test report to confirm performance as specified. Proper ARI certification documents for the test loop shall be made available upon request from the manufacturer for inspection. The performance test shall be conducted in accordance with ARI Standard 550/590-98 procedures and tolerances.

   1. Stable operation at a minimum load of 25 % shall be demonstrated during the factory performance test with constant entering condenser water temperature.

C. The performance test shall be run with clean tubes in accordance with ARI 550/590-98 to include the following:

   1. A downward temperature adjustment per Section A6.3 shall be made to the design leaving evaporator water temperature to adjust from the design fouling to the clean tube condition.
   2. An upward temperature adjustment per Section A6.3 shall be made to the design entering condenser water temperature to adjust from the design fouling to the clean tube condition.
   3. There shall be no exceptions to conducting the performance test with clean tubes and with temperature adjustments in (1) and (2). The manufacturer shall clean tubes, if necessary, prior to test to obtain a test fouling factor of .0000 hr. sq. ft. F/BTU.

D. The factory test instrumentation shall be per ARI Standard 550/590-98, and the calibration of all instrumentation shall be traceable to the National Institute of Standards and Technology (formerly NBS).

E. A certified test report of all data shall be submitted to the Contracting Officer prior to completion of the project. The factory certified test report shall be signed by an officer of the manufacturer's company. Preprinted certification will not be acceptable; certification shall be in the original.

   1. The equipment will be accepted if the test procedures and results are in conformance with ARI Standard 550/590-98. If the equipment fails to perform within allowable tolerances, the manufacturer will be allowed to make necessary revisions to his equipment and retest as required. The manufacturer shall assume all expenses incurred by SMUD or his representative to witness the retest.

F. Equipment manufacturer shall not invoice for the centrifugal chillers until successful completion of the performance test.

1.8 REFRIGERANT

A. Performance

1. Acceptable Refrigerants on which chiller performance is based are: HCFC-123 and, HFC-134a.
2. An original copy of an ARI certified computerized selection shall also be provided to display the performance of the machine with the applicable alternative refrigerant. Capacity and efficiency are to meet the scheduled performance.

1.9 SOUND

A. Sound Data - The Centrifugal Chiller Sound Pressure Level (SPL), in decibels (dB), with a reference pressure of 20 micropascals, shall not exceed 85 dB. All ratings shall be in accordance with ARI Standard 575-94, "Method of Measuring Machinery Sound Within An Equipment Space". If the chiller exceeds this level, the chiller manufacturer will provide factory installed sound attenuation to reduce the sound to the 85 dB level.

1. No reduction of entering condenser water or raising of leaving chilled water temperatures will be allowed in the SPL's. Making such a temperature adjustments does not represent the loudest operating condition the chiller will experience while on the job, and could mask sound problems that would otherwise occur.

1.10 DELIVERY, STORAGE AND HANDLING

A. Unit shall be stored and handled in accordance with manufacturer's instructions.

B. Unit shall be shipped with all refrigerant piping and control wiring factory installed.

C. Unit shall be shipped charged with oil and full charge of refrigerant HFC-123, or HFC-134a or a nitrogen holding charge as specified on the equipment schedule.

D. Unit shall be shipped with firmly attached labels that indicate name of manufacturer, chiller model number, chiller serial number, and refrigerant used.

1.11 WARRANTY

A. Warranty shall include parts and labor for two years after start-up or 30 months from shipment, whichever occurs first. A refrigerant warranty shall be provided for a period of five years.

PART 2 - PRODUCTS

2.1 MANUFACTURERS

A. Trane

B. Carrier

C. Multistack

2.2 INSTALLATION SITE CONDITIONS

A. The packaged hermetic centrifugal liquid chiller shall be installed for the purpose of cooling interior building spaces under the following site conditions:

B. Location: Sacramento, CA

1. Altitude: 76 feet above mean sea level.
2. Outdoor temperature range:
   a. Summer Dry Bulb: 100 deg F
   b. Summer Wet Bulb: 70 deg F
   c. Winter Dry Bulb: 31 deg F
3. Structural Loads:
   a. Seismic: Reference Standard :2007 CBC

C. The following utilities are available from the Purchaser’s facility:

1. Compressed Air: 90 psig, 36 deg F dew point
2. Electrical Power: 480 Volts, 3 Phase, 60 Hertz and 120 Volts, 1 Phase, 60 Hertz
3. The packaged hermetic centrifugal liquid chiller will be installed indoors on a concrete pad.

4. The concrete pad Area Classification: Not Classified

2.3 PACKAGED HERMETIC CENTRIFUGAL LIQUID CHILLER DESIGN CONDITIONS

A. The Design Operating/Performance Data:

1. Refrigerant: R-123, or R-134A
2. Electric power:
3. 480V, 60 hertz, 3 phase
4. Auxiliary power to oil pumps and controls:
5. 460V, 60 hertz, 3 phase
6. Chiller nominal capacity: The desired chiller capacity is 500 tons.

B. If the chiller manufacturer requires a variable speed drive to attain the required minimum efficiency it shall be included in the price.

Table 1 – Chiller Design Conditions

	SUMMER/PEAK	FALL/WINTER
CHILLED WATER		
Capacity, tons	500	By vendor
Flow, gpm	By vendor	By vendor
Entering water temp, ºF	54	54
Leaving water temp, ºF	42	42
Max. pressure drop, ft.	25	
CONDENSER WATER		
Flow, gpm	3.0 gpm/ton	3.0 gpm/ton
Entering water temp, ºF	85	Per ARI
Energy efficiency (kW/ton)	By vendor	By vendor
Leaving water temp, ºF	By vendor	By vendor
Entering water temp, ºF	65	65
Leaving water temp, ºF	By vendor	By vendor
Energy efficiency (kW/ton)	0.413	By vendor
Entering water temp, ºF (lowest)	By vendor	By vendor
Leaving water temp, ºF	By vendor	By vendor
Max. pressure drop, ft.	By vendor	By vendor
Energy efficiency (kW/ton)	By vendor	By vendor

C. Manufacturer's Certification:

1. Chiller manufacturer shall certify in writing chiller energy input for each of the following load points:
   b. Minimum load at entering condenser water temperature per ARI.
   c. 25 percent of full load at entering condenser water temperature per ARI.
   d. 50 percent of full load at entering condenser water temperature per ARI.
   e. 75 percent of full load at entering condenser water temperature per ARI.
   f. 100 percent of full load at 85 °F entering condenser water temperature).
   g. The same loading points as above based on constant leaving chilled water temperature of 42 ºF and flow.
   h. 50 percent of full load based on the conditions listed in section A above.

D. ASME Nameplate:

1. Evaporator and condenser: when the waterside will contain fluid of 120 gallons or more (including tubes and both water boxes) and the vessel will have an internal pressure exceeding 15 psig, the vessel shall display an A.S.M.E. nameplate which shows pressure and temperature data and the "U" stamp for Section VIII, Division 1 of the ASME Code".

2.4 OVERALL RESPONSIBILITY

A. The Vendor shall assume responsibility for the operational and mechanical integrity of all supplied equipment. Vendor shall also handle and expedite drawings, and conduct all factory tests required for the packaged hermetic centrifugal liquid chiller.

2.5 SAFETY

A. Prior to the shipment of the packaged hermetic centrifugal liquid chiller, the Vendor shall ensure that all safety measures and protective devices function in accordance with the Manufacturer's and Vendor's requirements and the specifications.

B. All exposed rotating components shall have suitable guard covers designed to prevent accidental contact. The guard covers shall be non-sparking, substantially constructed, securely fastened in place, and easily removable for maintenance purposes.

C. All exposed hot surfaces with temperatures exceeding 140 deg F shall be insulated or have suitable guard covers designed to prevent accidental contact. Guard covers shall be substantially constructed, securely fastened in place, and easily removable for maintenance purposes. Insulation shall be designed to reduce the external surface temperature of the covering, under all operating conditions to 140 deg F maximum when the ambient temperature is 100 deg F and the wind speed is 0 miles per hour. Insulation shall be designed to be easily removed and replaced for maintenance purposes without damage to the insulation.

D. Insulation, covers, facings, adhesives, fasteners, tape and supplementary materials added shall have, in the forms in which they are used, a maximum flame spread index of 25 without evidence of continued progressive combustion and a maximum smoke developed index of 50 when tested in accordance with ASTM E-84.

E. Steel parts or surfaces subject to operating temperatures above 400 deg F shall not be galvanized, coated with zinc or be cadmium plated.

F. Vendor shall certify that no materials or components used in the packaged hermetic centrifugal liquid chiller shall contain PCBs, asbestos or lead paint.

G. Equipment shall comply with current OSHA regulations.

2.6 EQUIPMENT

A. General: Factory assembled, single piece, liquid chiller shall consist of compressor, motor, starter or variable frequency drive, lubrication system, cooler, condenser, initial oil and refrigerant operating charges, microprocessor control system, and documentation required prior to start-up. A compressor motor starter will be mounted on the chiller, wired, and tested by the chiller manufacturer.

B. Compressor:

1. Centrifugal compressor of the high performance, single-stage type.
2. Compressor, motor, and transmission shall be hermetically sealed into a common assembly and arranged for easy field servicing.
3. All sensors shall have quick disconnects to allow replacement of the sensor without replacement of the entire sensor wire. Pressure transducers shall be capable of field calibration to ensure accurate readings and to avoid unnecessary transducer replacement. Transducers shall be serviceable without the need for refrigerant charge removal or isolation.
4. Chillers with a transmission shall be single ratio, single helical, parallel shaft speed increaser. Gears shall conform to AGMA Standards, Quality II.
5. Journal bearings shall be of the steel backed babbitt lined type. Aluminum journal bearings are not acceptable. The thrust bearing shall be tilting pad or rolling element type.
6. Centrifugal compressors shall use variable inlet guide vanes to provide capacity modulation while also providing pre-whirl of the refrigerant vapor entering the impeller for more efficient compression at all loads.
7. Centrifugal compressors that use oil shall be provided with a factory-installed lubrication

system to deliver oil under pressure to bearings and transmission. Included in the system shall be:

a. Hermetic driven rotary vane oil pump with factory-installed motor contactor with overload protection.
b. Refrigerant-cooled oil cooler. Water-cooled oil coolers are not acceptable.
c. Oil pressure regulator.
d. Oil filter with isolation valves to allow filter change without removal of refrigerant charge.
e. Oil sump heater controlled from unit microprocessor.
f. Oil reservoir temperature sensor with main control center digital readout
g. When factory-mounted compressor motor starter is provided, all wiring to oil pump, oil heater, and controls shall be pre-wired in the factory.
h. Compressor shall be fully field serviceable. Compressors which must be removed and returned to the factory for service shall be unacceptable.

C. Motor:

1. Compressor motor shall be of the semi-hermetic, liquid refrigerant cooled, squirrel cage, induction type suitable for voltage shown on the equipment schedule.
2. Motors shall be suitable for operation in a refrigerant atmosphere and shall be cooled by atomized refrigerant in contact with the motor windings.
3. Motor stator shall be arranged for service or removal with only minor compressor disassembly and without removing main refrigerant piping connections.
4. Full load operation of the motor shall not exceed nameplate rating
5. One motor winding temperature sensor (and one spare) shall be provided.

D. Cooler and Condenser:

1. Cooler shall be of shell and tube type construction, each in separate shells. Units shall be fabricated with high-performance tubing, minimum ¼ inch steel shell and tube sheets with fabricated steel waterboxes.
   a. Waterbox shall be marine waterbox (150 psig).
   b. Waterbox shall have standard Victaulic grooves.
2. Condenser shall be of shell and tube type construction, each in separate shells. Units shall be fabricated with high-performance tubing, minimum ¼ inch steel shell and tube sheets with fabricated steel waterboxes.
   a. Waterbox shall be marine waterbox (150 psig).
   b. Waterbox shall have standard Victaulic grooves.
3. Waterboxes shall have vents, drains, and covers to permit tube cleaning within the space shown on the drawings. A thermistor type temperature sensor with quick connects shall be factory installed in each water nozzle.
4. Tubes shall be individually replaceable from either end of the heat exchanger without affecting the strength and durability of the tube sheet and without causing leakage in adjacent tubes.
5. Tubing shall be copper, high-efficiency type, with integral internal and external enhancement unless otherwise noted. Tubes shall be nominal 3/4-in. OD with nominal wall thickness of 0.025 in. measured at the root of the fin at the enhanced areas and nominal wall thickness of 0.049 in. where the tubes are in contact with the end tube sheets unless otherwise noted. Tubes shall be rolled into tube sheets and shall be individually replaceable. Tube sheet holes shall be double grooved for joint structural integrity.
6. Cooler shall be designed to prevent liquid refrigerant from entering the compressor. Devices that introduce pressure losses (such as mist eliminators) shall not be acceptable because they are subject to structural failures that can result in extensive compressor damage.
7. The condenser shell shall include a FLASC (Flash Subcooler) which cools the condensed liquid refrigerant to a reduced temperature, thereby increasing the refrigeration cycle efficiency.
8. The condenser water heat exchangers shall be provided with a brush system for

automatic tube cleaning.

E. Tube Brushing System:

1. ATB System or equal; this system is designed to automatically maintain tube fouling at or below design conditions without interrupting normal equipment operation.
2. The tube brushing system consists of a special nylon brush inserted in each tube and a low-pressure drop catch basket attached to each end of the tube. A custom-made four-way reversing valve is installed to permit reversing the direction of water flow. The reversed water flow pushes the brush through the tube, removing tube deposits. The brush is caught in the opposite end basket and remains there until flow is reversed again in 30 seconds, thus repeating the process.
3. The frequency of the reversing cycle is set up to match job conditions. The four-way reversing valve pneumatic actuator is controlled by a pre-set time cycle that assures regular tube brushing during equipment operation.
4. The tube brushing system consists of the following:
   a. Turbo Brush and Basket Sets: One (1) set per each condenser tube.
      1) Turbo Brush (One (1) per set): Each brush to be nylon bristle, titanium wire and polypropylene tipped. One tip to have vanes to cause increased spiraling of brush through tubes for superior cleaning. Brush to have interference fit with ID of tube not to exceed 0.025" interference.
      2) Basket (Two (2) per set): Low pressure-drop design, polypropylene basket with removable 4-prong end-clip; neck outside diameter to press fit inner diameter of tube. End-clip shall not restrict basket end more than 25%. Basket shall allow for removal and replacement of brushes from tubes.
      3) Epoxy for Basket Installation: Special two-part water-proof epoxy for basket installation to have similar co-efficient of expansion as tube material.
      4) Tool: Special tool for installation of baskets.
   b. Four-Way Valve: Valve shall be Water Technology's Standard HX Valve and shall be of steel construction A 36 or better, positive sealing type, with all internal sealing parts of hard rubber and 304 Stainless Steel. Valve shall have parallel flow connections to minimize field installation piping and labor. It shall be manufactured in accordance with ASME Unfired Pressure Vessel Code Specification per Section VIII for operation at a system working pressure of 125 PSIG with a maximum system differential of 35 PSIG. End connections shall be flanged, victaulic or plain, as required. Valve shall be hydro-statically tested to 1.5 times designed working pressure. Valve shall allow for manual fail-safe turning, and have a mechanical position indicator.
   c. Pneumatic Actuator: To be pre-mounted on the valve. Double actuating cylinder to assure trouble-free operation. Operation to be on 50 to 100 PSIG, maximum air pressure.
   d. Position Control Switches: Micro-switch to be supplied to indicate complete turn of four-way valve in normal and reverse flow.
   e. Control Panel: The on-load control shall have the following features:
      1) NEMA 4x enclosure with mounting bracket.
      2) Cycle counter
      3) 24-hour timer to automatically initiate the on-load cleaning cycle.
      4) Manual Override of pre-set cleaning cycle.
      5) Power On light.
      6) Diverter Position Indicator lights:
         a) Normal Flow
         b) - Reverse Flow
         c) Malfunction Light - To indicate slow turning or incomplete valve turning.
         d) Solenoid valve for actuator operation, to be mounted at control panel or actuator.
         e) Flow Switch Bypass.
         f) Electric Chiller Unloading.

F. Refrigerant Flow Control: To improve part load efficiency, liquid refrigerant shall be metered from the condenser to the cooler using a float-type metering valve to maintain the proper liquid level of refrigerant in the heat exchangers under both full and part load operating conditions. By maintaining a liquid seal at the flow valve, bypassed hot gas from the condenser to the cooler is eliminated. The float valve chamber shall have a bolted access cover to allow field inspection and the float valve shall be field serviceable

G. Controls, Safeties, and Diagnostics:

1. Controls:
   a. The chiller shall be provided with a factory installed and wired microprocessor control center. The control center shall include a 16-line by 40-character liquid crystal display, 4 function keys, stop button, and alarm light. The microprocessor can be configured for either English or SI units
   b. All chiller and starter monitoring shall be displayed at the chiller control panel.
   c. The controls shall make use of non-volatile memory.
   d. The chiller control system shall have the ability to interface and communicate directly to the building control system.
   e. The default standard display screen shall simultaneously indicate the following minimum information:
      1) date and time of day
      2) 24-character primary system status message
      3) 24-character secondary status message
      4) chiller operating hours
      5) entering chilled water temperature
      6) leaving chilled water temperature
      7) evaporator refrigerant temperature
      8) entering condenser water temperature
      9) leaving condenser water temperature
      10) condenser refrigerant temperature
      11) oil supply pressure
      12) oil sump temperature
      13) percent motor Rated Load Amps (RLA)
   f. In addition to the default screen, status screens shall be accessible to view the status of every point monitored by the control center including:
   g. evaporator pressure
   h. condenser pressure
   i. bearing oil supply temperature
   j. compressor discharge temperature
   k. motor winding temperature
   l. number of compressor starts
   m. control point settings
   n. discrete output status of various devices
   o. compressor motor starter status
   p. optional spare input channels
   q. line current and voltage for each phase
   r. frequency, kW, kW-hr, demand kW
2. Schedule Function: The chiller controls shall be configurable for manual or automatic start-up and shutdown. In automatic operation mode, the controls shall be capable of automatically starting and stopping the chiller according to a stored user programmable occupancy schedule. The controls shall include built-in provisions for accepting:
   a. A minimum of two 365-day occupancy schedules.
   b. Minimum of 8 separate occupied/unoccupied periods per day.
   c. Daylight savings start/end.
   d. 18 user-defined holidays.
   e. Means of configuring an occupancy timed override.
   f. Chiller start-up and shutdown via remote contact closure.

3. Service Function: The controls shall provide a password protected service function which allows authorized individuals to view an alarm history file which shall contain the last 25 alarm/alert messages with time and date stamp. These messages shall be displayed in text form, not codes.
4. Network Window Function: Each chiller control panel shall be capable of viewing multiple point values and statuses from other like controls connected on a common network, including controller maintenance data. The operator shall be able to alter the remote controller's set points or time schedule and to force point values or statuses for those points that are operator forcible. The control panel shall also have access to the alarm history file of all like controllers connected on the network.
5. Pump Control: Upon request to start the compressor, the control system shall start the chilled water pump, condenser water pumps and verify that flows have been established.
6. Ramp Loading: A user-configurable ramp loading rate, effective during the chilled water temperature pull down period, shall control the rate of guide vane opening to prevent a rapid increase in compressor power consumption. The controls shall allow configuration of the ramp loading rate in either degrees/minute of chilled water temperature pull down or percent motor amps/minute. During the ramp loading period, a message shall be displayed informing the operator that the chiller is operating in ramp loading mode.
7. Chilled Water Reset: The control center shall allow reset of the chilled water temperature set point based on any one of the following criteria:
   a. Chilled water reset based on an external 4 to 20 mA signal.
   b. Chilled water reset based on a remote temperature sensor (such as outdoor air).
   c. Chilled water reset based on water temperature rise across the evaporator.
8. Demand Limit: The control center shall limit amp draw of the compressor to the rated load amps or to a lower value based on one of the following criteria:
   a. Demand limit based on a user input ranging from 40% to 100% of compressor rated load amps.
   b. Demand limit based on external 4 to 20 mA signal.
9. Controlled Compressor Shutdown: The controls shall be capable of being configured to soft stop the compressor. When the stop button is pressed or remote contacts open with this feature active, the guide vanes shall close to a configured amperage level and the machine shall then shut down. The display shall indicate "shutdown in progress."

H. Safeties: Unit shall automatically shut down when any of the following conditions occur: (Each of these protective limits shall require manual reset and cause an alarm message to be displayed on the control panel screen, informing the operator of the shutdown cause.)

1. motor over current
2. over voltage*
3. under voltage*
4. single cycle dropout*
5. bearing oil high temperature
6. low evaporator refrigerant temperature
7. high condenser pressure.
8. high motor temperature
9. high compressor discharge temperature
10. low oil pressure
11. prolonged surge
12. loss of cooler water flow
13. loss of condenser water flow
14. starter fault
15. *Shall not require manual reset or cause an alarm if auto-restart after power failure is enabled.
16. The control system shall detect conditions that approach protective limits and take self-corrective action prior to an alarm occurring. The system shall automatically reduce chiller capacity when any of the following parameters are outside their normal operating range:

a. high condenser pressure
b. high motor temperature
c. low evaporator refrigerant temperature
d. high motor amps.

17. During the capacity override period, a pre-alarm (alert) message shall be displayed informing the operator which condition is causing the capacity override. Once the condition is again within acceptable limits, the override condition shall be terminated and the chiller shall revert to normal chilled water control. If during either condition the protective limit is reached, the chiller shall shut down and a message shall be displayed informing the operator which condition caused the shutdown and alarm.
18. Internal built-in safeties shall protect the chiller from loss of water flow. Differential pressure switches shall not be allowed to be the only form of freeze protection.

I. Diagnostics and Service: A self diagnostic controls test shall be an integral part of the control system to allow quick identification of malfunctioning components. Once the controls test has been initiated, all pressure and temperature sensors shall be checked to ensure they are within normal operating range. A pump test shall automatically energize the oil pump. The control system shall confirm that water flow and oil pressure have been established and require operator confirmation before proceeding to the next test. A guide vane actuator test shall open and close the guide vanes to check for proper operation. The operator manually acknowledges proper guide vane operation prior to proceeding to the next test. In addition to the automated controls test, the controls shall provide a manual test which permits selection and testing of individual control components and inputs. A thermistor test and transducer test shall display on the ICVC (International Chiller Visual Controller) screen the actual reading of each transducer and each thermistor installed on the chiller. All out-of-range sensors shall be identified.

2.7 ELECTRICAL REQUIREMENTS:

A. Electrical power shall be supplied to the unit at the voltage, phase, and frequency listed in the equipment schedule.

2.8 START-UP:

A. The chiller manufacturer shall provide a factory-trained representative, employed by the chiller manufacturer, to perform the start-up procedures as outlined in the Start-up, Operation and Maintenance manual provided by the chiller manufacturer.

B. Manufacturer shall supply the following literature:

1. Start-up, operation and maintenance instructions.
2. Installation instructions.
3. Field wiring diagrams.
4. One complete set of certified drawings.

2.9 SPECIAL FEATURES:

A. Spare Sensors with Leads Accessory: Unit manufacturer shall furnish additional temperature sensors and leads.

B. Refrigerant Charge: The chiller shall ship from the factory fully charged with refrigerant and oil.

C. Thermal Insulation: Unit manufacturer shall insulate the cooler shell, economizer low side compressor suction elbow, motor shell and motor cooling lines. Insulation shall be ¾ in. (19 mm) thick with a thermal conductivity not exceeding 0.28 (Btu in.)/hr ft2 F and shall conform to UL standard 94, classification 94 HBF.

D. Compressor Discharge Isolation Valve and Liquid Line Ball Valve: These items shall be factory installed to allow isolation of the refrigerant charge in the condenser for servicing the compressor.

E. Low-Voltage Unit-Mounted Starter, if required: reduced voltage wye-delta shall be supplied. The compressor motor starter shall be factory mounted, wired and tested prior to shipment by

the chiller manufacturer. Customer electrical connection for compressor motor power shall be limited to main power leads to the starter, and wiring water pumps and tower fans to the chiller control circuit.

1. NEMA 1 enclosure with integral fan cooling and lockable hinged doors.
2. Main power disconnect (non-fused type).
3. Capability to start and stop chiller, pumps and tower fans.
4. 3 kVA control/oil heater transformer.
5. Branch circuit breaker to provide power for oil pump.
6. Branch circuit breaker to provide power for control power and oil heater.
7. The following standard features:
    a. Phase loss
    b. Phase reversal
    c. Phase imbalance
    d. 3-phase ground fault
    e. Low voltage — phase to phase and phase to ground
    f. Medium voltage — phase to ground
    g. Current overload
    h. Current flow while stopped
    i. 3-phase under/over voltage
    j. 3-phase digital ammeter/voltmeter
    k. Microprocessor based overload trip protection
    l. Watts
    m. Power factor
    n. Frequency
    o. Watt demand
    p. Watt hour

F. Unit-Mounted Variable Frequency Drive (VFD) (Without Built-In Harmonic Filter — LiquiFlo™1):

1. Design:
    a. VFD shall be refrigerant cooled, microprocessor based, pulse width modulated design. Water cooled designs are not acceptable.
    b. Output power devices shall be Insulated Gate Bipolar Transistors IGBTs).
    c. Converter section with full-wave fixed diode bridge rectifier shall convert incoming fixed voltage/frequency to fixed DC voltage.
    d. DC Link shall filter and smooth the converted DC voltage.
    e. Transistorized inverter and control regulator shall convert fixed DC voltage to a sinusoidal PWM waveform.
    f. Integrated controls shall coordinate motor speed and guide vane position to optimize chiller performance over a wide variety of operating conditions.
    g. Surge prevention and surge protection algorithms shall take action to prevent surge and move chiller operation away from surge.
2. Enclosure:
    a. Pre-painted unit mounted, NEMA 1 cabinet shall include hinged, lockable doors and removable lifting lugs.
    b. VFD shall have a short circuit interrupt and withstand rating of at least 100,000 amps.
    c. Provisions to padlock main disconnect handle in the “Off” positions shall be provided. Mechanical interlock to prevent opening cabinet door with disconnect in the “On” position or moving disconnect to the “ON” position while the door is open shall be provided.
    d. Provisions shall be made for top entry of incoming line power cables.
3. Heat Sink:
    a. The heat sink shall be refrigerant cooled. Heat sink and mating flanges shall be suitable for ASME design working pressure of 185 psig.
    b. Refrigerant cooling shall be metered by standard TXV controls to maintain heat sink temperature within acceptable limits for ambient temperature.

4. VFD Rating:
    a. Drive shall be suitable for nameplate voltage ±10%.
    b. Drive shall be suitable for continuous operation at 100% of nameplate amps and 150% of nameplate amps for 5 seconds.
    c. Drive shall comply with applicable ANSI, NEMA, UL and NEC standards.
    d. Drive shall be suitable for operation in ambient temperatures between 40 and 104 F, 95% humidity (non-condensing) for altitudes up to 6000 feet above sea level. Specific drive performance at jobsite ambient temperature and elevation shall be provided by the manufacturer in the bid.
5. User Interface:
    a. Displays shall provide interface for programming and display of VFD and Chiller parameters. Viewable parameters include:
        1) Operating, configuration and fault messages
        2) Frequency in hertz
        3) Load and line side voltage and current (at the VFD)
        4) kW
6. VFD Performance:
    a. VFD full load efficiency shall meet or exceed 97% at 100% VFD Rated Ampacity.
    b. Displacement Input Power Factor shall meet or exceed 95% soft start, linear acceleration, coast to stop.
    c. Base motor frequency shall be either 50 or 60 hertz. Adjustable frequency range from 38 to 60 hertz or 32.5 to 50 hertz.
7. VFD Electrical Service: (single point power):
    a. VFD shall have input circuit breaker with minimum 100,000 amp interrupt capacity.
    b. VFD shall have standard 15 amp branch oil pump circuit breaker to provide power for chiller oil pump.
    c. VFD shall have standard 3 KVA control power transformer with circuit breaker provides power for oil heater, VFD controls and chiller controls.
    d. The branch oil pump circuit breaker and control power transformer shall be factory wired.
    e. Input power shall be 380/480 vac, ±10 percent, 3 Phase, 50/60 Hz, ±2% Hz.
8. Discrete Outputs:
    a. 115v discrete contact outputs shall be provided for:
    b. 1) Circuit breaker shunt trip
    c. Alarm status.
9. Analog Output:
    a. An analog (4 to 20 mA) output for head pressure reference shall be provided. This signal shall be suitable to control a 2-way or 3-way water regulating valve in the condenser piping.
10. Protection (the following shall be supplied):
    a. Under-Voltage
    b. Over Voltage
    c. Phase Loss
    d. Phase Reversal
    e. Ground Fault
    f. Phase Unbalance Protection
    g. Single Cycle Voltage Loss Protection
    h. Programmable auto re-start after loss of power
    i. Motor Overload Protection (NEMA Class 10)
    j. Motor Over Temperature Protection
11. VFD Testing:
    a. VFD shall be factory mounted, wired and tested on the chiller prior to shipment.

END OF SECTION

SECTION 15720 – FACTORY-FABRICATED COOLING TOWERS

PART 1 - GENERAL

1.1 RELATED DOCUMENTS

A. The requirements of the GENERAL CONDITIONS, SUPPLEMENTARY CONDITIONS, and DIVISION 1 GENERAL REQUIREMENTS, apply to the work of this section.

1.2 SUMMARY:

A. This Section includes factory assembled and tested, open circuit, induced draft counterflow cooling tower.

1.3 DESCRIPTION

A. Section includes:

B. Provide all equipment, and accessories for the HVAC systems as specified herein; place in satisfactory operation.

C. Controls and Instrumentation as specified herein.

D. The open circuit cooling tower shall be the standard product of the open circuit cooling tower Vendor. A copy of Manufacturer's ISO 9000 certificate is required.

1.4 REFERENCES

A. All work and design and construction of the open circuit cooling tower shall conform to the requirements of the specifications and standards of the following:

1. Published Specifications' standards, tests or recommended methods of trade, industry or governmental organizations apply to work in this Section.
2. Comply with all applicable national, state and local codes.
3. In addition, comply with all standards or associations as specified herein, including, but not limited to, the following, as applicable:
4. American Gear Manufacturer's Association (AGMA)
5. American Friction Bearing Manufacturer's Association (AFBMA)
6. American Institute of Steel Construction (AISC)
7. American National Standards Institute (ANSI)
8. American Society of Mechanical Engineers (ASME)
9. American Society of Testing and Materials (ASTM)
10. American Welding Society (AWS)
11. Local Building Codes
12. Cooling Tower Institute (CTI)
13. Local Electrical Code
14. Factory Mutual (FM)
15. Institute of Electrical and Electronic Engineers (IEEE)
16. Instrument Society of America (ISA)
17. National Electrical Code (NEC)
18. National Electrical Manufacturer's Association (NEMA)
19. National Fire Protection Association (NFPA)
20. Occupational Safety and Health Administration (OSHA)
21. Steel Structures Painting Council (SSPC)
22. Underwriter's Laboratory (UL)
23. California Building Code (CBC)

1.5 SUBMITTALS

A. Refer to Specification Section 15010 – Common Work Results For HVAC.

Comment [DN1]: Are we including this spec?

B. Product Data:

1. Certified drawings of the cooling tower, sound data, recommended steel support indicating weight loadings, wiring diagrams, installation instructions, operation and maintenance instructions, and thermal performance guarantee by the manufacturer.
2. Product data including rated capacities, pressure drop, fan performance data, weights (shipping, installed, and operating), installation instructions, startup instructions, and rating curves with selected points clearly indicated.
3. Shop drawings indicating dimensions, weight loadings, weight distribution, and

clearances required around and between construction elements such as beams, columns, and walls.

4. Coordination drawings indicating structural supports, piping rough-in requirements, wiring rough-in requirements (determine spaces reserved for electrical equipment), and access requirements around other work (including working clearances to mechanical controls and electrical equipment).
5. Wiring diagrams for power supply wiring to the fluid cooler and ladder-type wiring diagrams for interlock and control wiring. Clearly differentiate between factory-installed and field-installed wiring.
6. Maintenance data for the cooling tower. Include parts lists for fill, water distribution system, fans, bearings, fan drives, vibration isolators, controls, basin heaters, and all accessories.
7. Certified performance curves plotting leaving-water temperature (LWT) against wet-bulb temperature (WBT).

1.6 QUALIFICATIONS

A. Manufacturer shall specialize in the manufacture of the product specified in this Section.

B. Unit shall be Manufacturer's standard product, designed and manufactured in accordance with appropriate industry standards.

C. The Manufacturer shall have at least two (2) years of proven experience in production of the proposed unit.

D. The Manufacturer shall have at least fifty (50) units of equal or comparable design in continuous duty service for a minimum of one (1) year.

E. The Vendor shall be an authorized distributor of the Manufacturer.

1.7 QUALITY ASSURANCE

A. NEMA Compliance: Provide electric motors and electrical components required as part of factory-fabricated cooling towers that comply with applicable NEMA Standards.

B. NEC Compliance: Install cooling towers according to NFPA 70 "National Electrical Code."

C. Welding Qualifications: Welders shall be certified in accordance with American Welding Society "Standard Qualification Procedure".

D. Verification of Performance:

1. Test and certify cooling tower thermal performance according to CTI Standard 201.
2. Test and certify cooling tower sound performance according to CTI ATC-128.

E. Meet or Exceed energy efficiency per ASHRAE 90.1.

1.8 WARRANTY

A. Motor/Drive System: Two (2) year, from Notice of Completion, comprehensive warranty against materials and workmanship including motor, fan, bearings, mechanical support, sheaves, bushings and belt.

1.9 DEFINITIONS

A. The term "Manufacturer" as used in this specification, shall mean the Manufacturer of the open circuit cooling tower.

B. The term "Vendor" as used in this specification, shall mean the Vendor of the open circuit cooling tower.

C. The term "Purchaser" as used in this specification shall mean SMUD and its authorized representatives.

D. The term "Open circuit cooling tower" as used in this specification shall mean one unit(s), each consisting of a cooling water diffuser medium, fan(s), drive motors, enclosure, basin and associated equipment, systems, controls, instrumentation and protective devices necessary to meet the requirements of this Specification.

E. The term "Bidder" shall mean anyone who submits a proposal in response to this specification.

PART 2 - PRODUCTS

2.1 GENERAL:

A. Manufacturers: Model AT-29-121, or equal as manufactured by EVAPCO, Baltimore Aircoil Company, The Marley Cooling Tower Company, or equal. induced draft counterflow cooling tower with CTI Certified performance to cool 1,500 gpm of water from 95ºF to 85ºF at 72ºF entering wet bulb temperature.

B. The cooling tower shall be fully assembled with all moving parts factory mounted and aligned.

2.2 INDUCED-DRAFT, COUNTERFLOW COOLING TOWERS

A. Factory assembled and tested, induced draft counterflow cooling tower complete with fill, fan, louvers, accessories, and rigging supports.

B. Cooling Tower Characteristics and Capacities: Refer to the Cooling Tower schedule.

C. Mechanical and electrical connections to the package shall be located external to the structural steel base and enclosure.

D. All structural welding performed shall meet the requirements of AWS D1.1 Structural Welding Code. All pipe-welding shall meet the requirements of ANSI/ASME B31.3.

E. Radiographic inspection and nondestructive examination (NDE) of piping welds shall be in accordance with the applicable codes.

F. All bolts, nuts, U-bolts, mounting hardware, etc. shall be cadmium-plated unless noted otherwise in this Specification.

G. Fans:

1. Type and Material: Axial propeller, individually adjustable wide chord blade extruded aluminum statically balanced and installed in a closely fitted cowl with venturi air inlet for maximum efficiency, covered with a heavy gauge hot dipped Galvanized steel mesh and have steel frames bolted to the fan cowl.
2. Fan Shaft: Solid shaft of ground and polished steel.
3. Sound Data (Sound Pressure Levels in dB(A))

	End	Motor Side	Opposite End	Opposite Motor Side	Top
S.P.L. dB(A) at 5 ft.	78	80	78	79	80
S.P.L. dB(A) at 50 ft.	63	65	63	64	69

H. Water Distribution System: Non-corrosive materials.

1. Evenly distribute of water over fill material with pressurized spray tree.
2. Pipes: Schedule 40 PVC, Non-corrosive Materials
3. Nozzles: Non-clogging, ABS Plastic, threaded into branch piping.
4. Large orifice spray nozzles utilizing fluidic technology for superior water distribution over the fill media and to minimize water distribution system maintenance.
5. Spray header and branches are Schedule 40 Polyvinyl Chloride (PVC) for corrosion resistance with steel connection to attach external piping. Branches have threaded end caps to facilitate debris removal.

I. Collection Basin Material: Type 304 Stainless Steel:

1. Removable stainless-steel strainer with openings smaller than nozzle orifices. All type 304 stainless steel construction with large area removable perforated screens.
2. Joints: Bolted and sealed watertight or welded.
3. Overflow, makeup and side drain connections
4. Equalizer connection.

J. All components shall be mounted on a single-piece rigid structural steel base. The structural steel base shall constitute a complete integrated unit to ensure equipment alignment and minimize installation costs. The structural steel base shall be provided with provisions for leveling and anchoring the open circuit cooling tower to the Purchaser's structure. Anchor bolts will be provided by others. The structural steel base shall also include provisions for lifting the open circuit cooling tower.

K. Casing: Type 304 Stainless Steel:

1. Casing panels shall totally encase the fill media to protect the fill from damage due to direct atmospheric contact.
2. Fasteners: Corrosion resistance equal to or better than materials being fastened.
3. Joints: Sealed watertight.

4. Welded Connections: Continuous and watertight

L. Fill Media: PVC; resistant to rot, decay and biological attack; formed, crossfluted bonded together for strength and durability in block format for easy removal and replacement; suitable for use as a working surface; self extinguishing with flame spread rating of 5 per ASTM E84-81a; able to withstand continuous operating temperature of 130ºF; and fabricated, formed and installed by the manufacturer to ensure water breaks up into droplets.

M. Drift Eliminators: The eliminators are constructed entirely of Polyvinyl Chloride (PVC) in easily handled sections. Design incorporates three changes in air direction and limits the water carryover to a maximum of 0.001% of the circulating water rate.

N. Air Inlet Louver Screens: Formed PVC mounted in Type 316 stainless steel frames for easy removal; designed "Sight Tight" to completely block direct sunlight from entering and water from splashing out of the cooling tower.

1. The air inlet louvers are constructed from UV inhibited polyvinyl chloride (PVC) and incorporate a framed interlocking design that allows for easy removal of louvers for access to the entire basin area for maintenance. The louvers have a minimum of two changes in air direction and are of a non-planar design to prevent splash-out, block direct sunlight and debris from entering the basin.

O. Electric Water Level Control

1. An electric water level control package shall be installed in place of the standard mechanical make-up valve and float assembly. The control consists of multiple stainless steel probes, mounted external to the unit in a vertical standpipe.
2. A weather protected slow closing solenoid valve shall be factory installed on the make-up water connection, ready for piping to a water supply with a pressure between 25 and 50 psi.

P. Electric Water Heaters

1. Provide stainless steel electric heaters with a separate thermostat and low water protection device. Provide magnetic contactor, with 120 volt control circuit, transformer, and disconnect. Heaters are to be been selected for +40 F pan water with 25 F ambient. Heaters are 480/3/60.

Q. The cooling tower shall include inlet and outlet water connections, shall be beveled for welding and grooved for mechanical coupling or bolt hole circle designed to accept an ASME Class 150 flat face flange.

R. All other piping connections shall be NPT.

2.3 MOTORS AND DRIVES

A. General requirements for motors are specified in Section 15010 General Mechanical Requirements.

B. Enclosure Type: TEAO

C. VFD Duty Motor insulation shall be NEMA, Class F, with temperature rise in accordance with NEMA standards.

D. Motors shall be premium efficiency.

E. Motors shall be sized for a 1.15 service factor.

F. Drive: Power Band Belt designed for 150% of the motor nameplate HP.

1. Belt: Mutli-groove, solid back V-belt type neoprene reinforced with polyester cord.
2. Sheaves: Aluminum alloy
3. The motor sheave is external to the unit for dry operation
4. Bearings: Heavy duty, self-aligning pillow block bearings with lubrication lines extended to side access door. Minimum L10 life for bearings shall be 75,000 hours. Provide extended grease lines and fittings.
5. Vibration Cutout Switch: Mechanical switch to de- energize fan motors if excessive vibration in NEMA 4 enclosure.

2.4 ELECTRICAL

A. All electrical components shall be suitable for outdoor operation.

B. All electrical components shall be UL listed. Electrical enclosures shall be NEMA 4. All wiring and conduits shall be in accordance with NFPA 70 (NEC) and the National Electrical

Comment [DN2]: Yes

Comment [DN3]: Is this an installation detail? Should this be in the installation spec?

Comment [DN4]: Are we providing this spec?

Code.

C. The required power feeders for the fan motors will be installed by Others. Power connections will be made directly to the motors. Control connections shall be made at the unit-mounted control panel and skid-mounted junction boxes. Provide numbered terminal blocks for all on-skid and field wiring terminations.

D. All power, control and instrumentation wiring shall be marked at both ends with permanent wire markers.

2.5 CONTROLS

A. An enclosed control panel shall be provided for each cell of the evaporative cooling equipment. The panel shall be provided with a main a circuit breaker disconnect and a separate circuit breaker for each motor. Fuse protection will not be accepted. Panels containing basin heaters shall have an Earth Leakage Breaker containing ground fault protection.

B. A temperature controller shall be provided with the enclosed controls. A basin heater contactor with circuit breaker shall be provided. A vibration cutout switch input shall be provided.)

C. A heavy-duty, non-fusible safety disconnect switch shall be provided by the manufacturer of the evaporative cooling equipment. Switch shall be single throw, 3-pole design, rated up to 600 VAC. Switch shall have triple padlocking capability, a visible double break rotary blade mechanism, a clearly visible On/Off handle, an interlocking mechanism to prevent door opening with handle in On position, and a clear line shield. Safety switch shall be provided in a NEMA 3R enclosure.

D. Provide electronic remote reset vibration switch with contact for BAS monitoring. Wiring shall be by the installing contractor. The electronic vibration cut out switch shall be set to trip at a point so as not to cause damage to the cooling tower. The trip point will be 0.45 in/sec.

E. Basin heater controls shall be provided as part of the Vendor-supplied, skid-mounted package.

2.6 MAINTENANCE ACCESS

A. Internal Working / Service Platforms: Provide a complete internal working platform and ladder system for service of all drive components. A suitable working platform may be constructed of the fill media for counterflow cooling towers.

B. Handrails/Grabrails: Galvanized steel pipe complying with 29 CFR 1910.23. Supply a perimeter handrail with ladder from grade to fan deck.

C. Ladders: Aluminum, sloped “ships type” with grabrail or vertical complying with 29 CFR 1910.27.

D. Hinged door in the upper casing for fan drive and water distribution system access. Removable louver panels on all four sides of the unit for pan and sump access. Hinged swing away cover for motor access.

PART 3 - EXECUTION

3.1 PREPARATION FOR SHIPMENT

A. The Vendor shall preserve the open circuit cooling tower and ancillary equipment for shipment and storage at the Purchaser’s site.

B. The Vendor shall provide suitable protection during shipment and storage for the open circuit cooling tower and ancillary equipment in accordance with the site conditions as specified herein.

C. All lubricants, spare parts, etc. required to make the open circuit cooling tower operational upon installation, shall be boxed or crated, attached to the skid, and shipped with the unit.

D. All equipment, accessories and devices shall be securely braced and adequately crated to prevent damage during shipment. Small, easily damaged parts, such as gauges, tubing and the like, shall be removed if necessary for adequate protection from damage during shipment.

E. Each major component shall be properly identified with item and serial numbers. All material shipped separately shall be properly tagged or marked with the item and serial number.

Shipment marking information shall be provided on interior packages and exterior shipping containers. The information shall include nomenclature, contract or order number, Purchaser's name and destination. All tagging shall be consistent with drawing notations.

F. Unpacking and lifting instructions shall be provided and shall be sealed in a waterproof envelope that shall be tacked, stapled or otherwise securely attached to the outside of each basic equipment or container in the most protected location. The words "Unpacking Instructions" shall be stenciled on each container indicating the location of such instructions.

G. Manufacturer shall include in his Bid the cost to load out and tie down the unit on a truck, and ship FOB Site.

3.2 FACTORY INSPECTION AND TESTS

Comment [DN5]: Delete. No installation in this equipment bid.

A. An Inspection and Test Plan (ITP) shall be provided to describe the Quality Assurance and Quality Control Program requirements for the open circuit cooling tower. The ITP shall define quality requirements for purchased and manufactured material from receiving inspection to the final package inspection. The ITP shall list the primary controlling and verifying documents, codes and standards used to define the quality requirements and identified inspection points.

B. All testing operations shall be conducted under the direct control of the Vendor's Quality Assurance Activity. This Activity shall ensure compliance with the specified test limits and procedures.

C. The open circuit cooling tower shall be tested in accordance with the Manufacturer's Specifications to confirm that flow, pressure, power input and vibration levels meet the Manufacturer's standards.

D. Radiographic inspection of package piping welds shall be performed in accordance with ANSI/ASME B31.3.

E. All piping shall be hydrostatically tested to 1.5 times the design pressure in accordance with ANSI/ASME B31.3. Certification of these tests shall be included in the operating manual.

F. All control devices, protection equipment and devices, safety devices, and remote functions shall be tested.

G. All wiring shall be checked for continuity and insulation integrity.

H. Three copies of Certified Test Data shall be furnished after completion of acceptance testing for each package. The report shall give test results and compare the results to the Manufacturer's and Vendor's acceptance test specification requirements by means of calculations, graphs, strip records, and descriptions.

3.3 FIELD QUALITY CONTROL

A. Manufacturer's Field Service: Provide services of a factory-authorized service representative to supervise component field assembly and the cooling tower installation, including piping and electrical connections. Report results in writing to the contractor.

B. The factory-authorized service representative shall provide complete startup and report results in writing to the contractor.

3.4 COMMISSIONING

A. Operate equipment controls and safeties.

B. Lubricate rotating parts.

C. Verify fan rotation direction.

D. Verify that motor amperage according to manufacturer's data.

E. The cooling tower manufacturer shall provide a certification letter that the fluid cooler, condenser water piping, and all appurtenances has been installed correctly.

F. Provide the services of a qualified technician employed by the Vendor to assure satisfactory startup and commissioning of the unit.

G. Provide a set of start-up / commissioning consumable parts. This start-up set shall include parts that are most commonly consumed during the normal equipment start-up and commissioning process. The set shall be shipped to the Purchaser's site and shall be on hand at the time of start-up in order to provide for the immediate on-site availability of these parts, helping to minimize delays in the commissioning process.

H. Concurrent with the start-up and commissioning, Vendor shall perform a site performance verification test of the open circuit cooling tower following the Manufacturer's procedure for site testing of open circuit cooling towers.

I. Three copies of Certified Test Data shall be furnished after completion of field verification testing for each package. The report shall give test results and compare the results to the Manufacturer's and Vendor's acceptance test specification requirements by means of calculations, graphs, strip records, and descriptions.

J. The Vendor shall submit a recommended maintenance program for its equipment. The program shall include an inspection and maintenance schedule and details of tasks to be performed.

K. The Vendor shall provide on-site equipment maintenance and operation training for Purchaser's personnel.

3.5 DEMONSTRATION

A. Startup Services: Provide the services of a factory-authorized service representative to provide startup service and to demonstrate and train maintenance personnel as specified below. Training should be a minimum of two hours. Include the following:

1. Cooling tower startup.
2. Cooling tower shutdown.
3. Troubleshooting procedures.
4. Cooling tower servicing.
5. Preventative maintenance schedules and procedures.
6. Operating controls and safeties.

END OF SECTION

SECTION 15950 - CONTROLS

PART 1 - GENERAL

1.1 RELATED DOCUMENTS

A. The requirements of the GENERAL CONDITIONS, SUPPLEMENTARY CONDITIONS, SPECIAL CONDITIONS and DIVISION 1 GENERAL REQUIREMENTS, apply to the work of this section.

1.2 SUMMARY

A. General

1. This Specification describes the minimum acceptable requirements for the design, engineering, fabrication, assembly, wiring, testing, installation, programming, and startup of the EMS. The DDCS contractor shall furnish and be responsible for all material, labor, and other services required to provide a fully operational Energy Management System (EMS), in accordance with this Specification.

2. The DDCS shall be modular in nature, and shall permit expansion of both capacity and functionality through the addition of sensors, actuators, standalone DDC panels, and operator devices.

3. All labor, material, equipment and software necessary to meet the functional intent of the EMS and Temperature Control systems as specified herein shall be included.

4. The Tecogen generators have a Modbus interface, refer to the Cogeneration Module Operation Manual for information on setting up this interface.

B. Related Sections

1. Section 15010 - General Mechanical Requirements applies to this section.

2. Section 15510 - HVAC Piping and Valves

3. Section 15800 - Heating, Ventilating, & Air Conditioning

4. Division 16 - Electrical Work.

1.3 REFERENCES

A. NEMA - National Electrical Manufacturer's Association.
B. UL - Underwriter's Laboratories, Inc.
C. NFPA - 70 National Electric Code (NEC).
D. Title 24 California Code of Regulation (CCR) Title 24, Part 3, Basic Electrical Requirements, State Building Standards Electric Code.

1.4 QUALITY ASSURANCE

A. Design Criteria

1. All materials and equipment used shall be standard components, of regular manufacture for this application.

2. All systems and components shall have been thoroughly tested and proven in actual use.
3. All work described in this section shall be installed, wired, circuit tested and calibrated by factory-trained electricians and mechanics qualified for this work that are in the regular employ of the temperature control system manufacturer or its exclusive factory authorized installing contracting field office (representative).
4. Electrical Power Wiring and connections to motors and control equipment and panels shall be furnished and installed by the Electrical Contractor.
5. C.C.R. - Title 24 Energy Standards, Requirements: All work, controls devices and control operation and settings shall meet current requirements of the C.C.R. Energy Standards.
6. The contractor shall coordinate the location of all taps and wells in all hydronic piping for all sensors and flow measurement devices with the mechanical contractor.

B. Guarantee: Entire system shall be guaranteed for one year from date of acceptance of the completed building. Form of Guarantee subject to SMUD's approval.

1.5 SUBMITTALS

A. Shop drawings, product data and Service contract.
   1. Submit in accordance with Section 15010.
   2. Controls service contract including description of training be provided to SMUD.
   3. Material list and description.

B. Prior to installation, the contractor shall submit wiring and control diagrams, component data and description of sequences of operation for approval.

C. Supply all equipment and accessories in accordance with the requirements of all applicable national, state and local codes.

D. All items of a given type shall be the products of the same manufacturer.

E. Bidder shall present the names of five comparable projects, within Northern California, which have been successfully completed, and are in full operation.

F. Temperature control contractor shall have a service office that is staffed with factory-authorized service technicians capable of servicing all aspects of the control system. This office shall have 24-hour emergency service and shall provide a maximum four-hour trouble response guarantee.

G. The required number of copies of shop drawings of the entire control system shall be submitted and shall consist of a complete list of equipment and materials, including manufacturer's catalog cuts, and installation instructions.
   1. Shop drawings shall also contain complete wiring and schematic diagrams, software descriptions, calculations, and any other details required to demonstrate that the system has been coordinated and will properly function as a system. Terminal identification for all control wiring shall be shown on the shop drawings.
   2. A complete written description of operation shall also be included with the submittal package.

H. Equipment and labor not specifically referred to herein or on the plans, that is required to meet the functional intent, shall be provided without additional cost to SMUD.

I. Operating and Maintenance Data:
   1. Manufacturer's descriptive literature, operating instructions, and maintenance and repair data in accordance with the requirements of Section 15010.

PART 2 - PRODUCTS

2.1 GENERAL

A. All components used shall be serviceable, repairable, or replaceable by qualified temperature control technicians using nonproprietary parts, tools, and instruments.

B. The control system shall be Siemens, no equal. Sequence of operation and control system components shall be shown on the submittals.

2.2 WIRES, CABLES AND TERMINATIONS

A. Control Wiring and Conduit for the control equipment in accordance with the submitted wiring diagrams, and the functional operation of the control system shall be the responsibility of the control contractor. All control wiring shall be installed in accordance with local codes and the C.E.C. All control wiring shall be in conduit, concealed in walls or slab or above a non-removable ceiling. Control wiring is not required to be in conduit above removable ceilings. Line voltage control wiring and low voltage control wiring shall be Type THHN/THWN wire per C.E.C. Low-voltage jacketed multi-conductor cable may be used for thermostat wiring installed in conduit.

B. Rigid Steel Conduit

1. Standard weight, mild steel pipe, heavy wall, with threaded fittings, zinc coated on both inside and outside by a hot dipping or sherardizing process. Conduit fittings finished to same requirements as for rigid steel conduit. All couplings, unions and fittings threaded type.

C. Electric Metallic Tubing (EMT)

1. Shall be galvanized steel, thin wall. Maximum trade size used shall be 4 inches. May be used concealed in dry wall partitions, above furred ceiling, and for surface installation in mechanical equipment rooms or where exposed runs are specifically noted on drawings. May not be used underground, under floor, exposed to weather, in concrete, or in any location subject to physical damage.
2. Connectors shall be steel rain tight compression type with insulated throat. Couplings shall be steel rain tight compression type. Set screw type fittings shall not be used.

D. Flexible Metal Conduit

1. Shall be galvanized steel or aluminum with minimum trade size of 3/8" as permitted by CEC. In wet and corrosive locations or outside shall be liquid-tight, minimum size ½". May be used to connect recessed lighting fixtures to junction box or mechanical controls and equipment. May not be used in walls or furred ceilings except as expressly permitted by the Engineer and only where certain structural constraints allow no other means of routing. Length shall be kept to a minimum but shall allow for movement or removal of equipment. Leave slack in flex connection to maintain flexibility of conduit.
2. Connectors shall be tite-bit type with insulated throat, T&B Series 3110; connectors for liquid-tight shall be with insulated throat T&B Series 5331 with sealing "O"-ring at outside of enclosure.

2.3 SENSORS AND INSTRUMENTATION

A. Room sensors shall provide signal with concealed local system over-ride switch for off-hour "occupied" use.

B. All equipment and controls, e.g., switches, relays, etc., shall be clearly identified and labeled as to function and position.

C. Electronic Thermometers

D. Electronic thermometers shall have 2% accuracy and 1½% repeatability. They shall be mounted on the temperature control panels.

2.4 HOT WATER CONTROL VALVE

A. The hot water control valve shall be a diverting valve in accordance with the chiller manufacturer’s recommendation and shall be furnished with a valve body, actuator, linkage and an actuator motor. The actuator and motor assemblies are to be sized by the valve

manufacturer in accordance with the specified pressure and flow requirements. The hot water valves shall be suitable for hot water service up to 250 °F. Valve shall be rated for a minimum of 125 psig working pressure per ANSI Standards and shall be equipped with a 125 psig flat-faced ANSI flange connections.

B. Body: Valve shall be a 3-way diverting type flanged globe valve incorporating a cast iron body, stainless steel stem, bronze seat and plug, rangeability 30:1 and 32 °F to 250 °F service temperature range. Flow coefficient ratings should be as follows:

C. For 3” valves the Cv rating should be no less than 90

D. For 6” valves the Cv rating should be no less than 300.

E. Actuator: The actuator motor assembly shall be capable of modulating hot water flow in a linear fashion from 10% to 100% of maximum design chiller capacity. The actuator motor control voltage shall be coordinated with the chiller controller and include an actuator position feedback signal. Actuators shall be spring return and fail safe to full diverting duty. Assembly should be UL listed and NEMA 2 classified. Run time from full open to full close should be between 100 and 150 seconds. Quick acting valves are not required for this application.

F. Alternate: Provide dual butterfly valves, motorized and linked to divert the flow. In this case valve Cv’s must be matched to provide no significant system pressure differential change through full operation from 10% to 100%. Valves shall meet the above specifications.

2.5 DIVERTING VALVES

A. Diverting valves shall be furnished with a valve body, actuator, linkage and an actuator motor. The actuator and motor assemblies are to be sized by the valve manufacturer in accordance with the specified pressure and flow requirements. The hot water valves shall be suitable for hot water service up to 250 °F. Valve shall be rated for a minimum of 125 psig working pressure per ANSI Standards and shall be equipped with a 125 psig flat-faced ANSI flange connections.

B. Body: Valves shall be a 3-way diverting type flanged globe valve incorporating a cast iron body, stainless steel stem, bronze seat and plug, rangeability 30:1 and 32 °F to 250 °F

C. service temperature range. Flow coefficient ratings should be as follows:

D. For 3” valves the Cv rating should be no less than 90

E. For 6” valves the Cv rating should be no less than 300.

F. iii) Actuator: The actuator motor assembly shall be capable of modulating hot water flow in a linear fashion from 10% to 100% of maximum design chiller capacity. The actuator motor shall be 120 or 24 VAC and include 4-20 mA actuator position feedback. Actuators shall be spring return and fail safe to full diverting duty. Assembly should be UL listed and NEMA 2 classified. Run time from full open to full close should be between 100 and 150 seconds. Quick acting valves are not required for this application.

G. Alternate: Provide dual butterfly valves, motorized and linked to divert the flow. In this case valve Cv’s must be matched to provide no significant system pressure differential change through full operation from 10% to 100%. Valves shall meet the above specifications.

2.6 CONTROL PANELS

A. Control Panels shall be code gauge steel, electric cabinet to house pre-wired controls. Doors with hardware shall be furnished to provide access to control devices. Wiring shall be brought to terminal strips. The panel front shall contain pilot lights, switches, lucite plot plan, and thermometers as required. Provide California "Dead Front". All steel members shall be prime coated and the outside surfaces shall have two additional coats baked enamel; color as selected. Furnish detailed drawings for approval.

B. Furnish Temperature Control Panels with a locking door for mounting all devices as shown. They shall meet all applicable requirements of Title 24, California Administrative Code.

C. All controllers, relays, switches, etc. for equipment located in mechanical equipment rooms shall be mounted in a TCP. Temperature settings, adjustments and calibration shall done at the TCP. All electric devices within a control panel shall be factory wired.

D. Provide engraved laminated plastic nameplates identifying all devices mounted on the face of the control panels. A complete set of related "as-built" control drawings shall be furnished in each control panel.

2.7 DAMPERS AND ACTUATORS

A. Motorized Control Dampers

1. Shall be parallel blade for two-position control and opposed blade for proportional control applications. Dampers shall be black enamel finish or galvanized, with nylon bearings. Blade edge and tip seals shall be included for all dampers. Blades shall be 16-gauge minimum and 10" wide maximum and frame shall be of welded channel iron. Dampers with both dimensions less than 18" may have strap iron frames.

B. Electronic Actuators

1. Actuator shall be fully modulating, floating (tri-state), or two position spring as indicated in the control sequence. Fail safe where specified shall require mechanical spring return.
2. Modulating actuators shall respond to a 2-10 VDC or 4-20 mA signal (with the addition of a 500 ohm resistor). The actuator shall generate a 2-10 VDC actuator position output signal for electronic feedback to the control panel. The actuator shall have the capability of adding auxiliary switches or feedback potentiometer if required. Powering shall be 4 VAC or 24 VDC and power consumption shall not exceed 8 watts at 24 VAC. A 3 foot cable shall be provided for easy installation to an electrical junction box.
3. The actuator shall provide minimum torque required for proper operation throughout its operating range with an approximate running time of 45 seconds to one minute for full rotation. The actuator shall be designed with current limiting motor protection. (End of travel switches are not acceptable) A release button on the actuator shall be provided to allow for manual override, except when utilizing spring return actuators. All actuators shall be UL listed.

2.8 SITE CONTROLLER

A. General

1. The site controller shall provide 8-hours of EEPROM, super capacitor, or battery backed real time clock functions. It shall also provide system communications to programmable and application specific controllers in the field. The site controller shall interface with Operator terminal(s) for information display. The site controllers shall share information in a Peer-to-Peer manner utilizing a high-speed LAN communication network. The site controller shall be capable of 1 Meg baud LAN communication rates.
2. The site controller shall decide building strategies for system based on information from any points in the system regardless if the point is directly monitored by the site controller. Program that implements these strategies shall be completely flexible and user definable. Any system utilizing factory pre-programmed building strategies that cannot be modified by field personnel on site or downloaded via remote communications are not acceptable. Changing building strategies via firmware changes is also unacceptable. Program executed speed shall be once per second as a minimum.
3. Site controller shall have at a minimum, three (3) additional communication ports in addition to the LAN port. The ports shall be one EIA-232 for BACnet,, one for communication to portable field computer and one for a 56600K baud modem for remote communications.
4. Operating Environment: Temperature from 32oF to 120oF (0oC to 50oC. Relative Humidity: From 10% to 90%, non-condensing.

B. Remote Communications

1. Provide Color Graphic Software for computer which allows operator to view and change all information associated with Microgrid system on color graphic displays. Operator shall be able to change all parameters in this section from off-site location including all programming of the site controllers and programmable unit controllers.
2. Site controller shall have capability to call out alarm conditions automatically if desired. Alarm message and site description shall be sent to offsite computer or serial printer as shown.
   a. SMUD shall provide standard voice grade phone line for remote communication function.

2.9 UNIT CONTROLLER

A. General
1. Provide programmable and application specific unit controller as needed to comply with sequence of operation, point list and drawings. All Unit controller units shall be completely stand-alone with no loss of control if communication with the controller is interrupted. All control parameters, DDC programs and local variables such as setpoint information shall be stored in EEPROM on board each Unit controller allowing the operator to change information as desired. Controllers that utilize a battery to backup control parameters, etc., shall not be allowed.
2. All points on the submittal drawings, in sequence of operation and on point list shall be connected to and controlled by DDC units. No control shall be done by external devices such as thermostats or analog controls that are not part of the DDC system.
3. Programmable unit controllers shall be used in custom applications such as boiler plant, air handlers, or when application specific controller's sequence of operation is not applicable.
4. Communication from the controller to unit controllers shall be via a labeled two wire communication trunk as specified for site controllers above. System shall communicate to one unit controller regardless of whether other unit controllers on the same communication line are powered and connected. Ground referenced communications is prohibited.
5. Programmable or application specific controllers shall have a factory-mounted digital output status LED light and screw type wiring connectors. Spade type connectors or telephone jack connectors are not acceptable. Any other connectors that require crimping are not acceptable.

B. Programmable Unit Controllers
1. Each programmable unit controller shall be completely programmable from the system terminal, via field computer or via remote communications.
2. This controller shall be programmed to perform custom strategies for system based on information from all points in the field. Program that implements these strategies shall be completely flexible and user definable. Any controllers utilizing factory programmed strategies that cannot be modified by field personnel on site, require factory assistance, or cannot be downloaded via remote communications are not acceptable. Changing strategies via firmware changes is also unacceptable.
3. Every digital output shall have local status indication. Outputs shall have minimum control resolution of 0.1 seconds On or Off.
4. Each of the analog outputs shall be independently switch selectable to output 0 to 10 VDC or 4 to 20 mA. Unit shall be programmable to output a sub range of voltage or current to match the device controlled. Analog outputs shall use 8 bit digital to analog conversion.

C. Application Specific Unit Controllers
1. Application specific unit controllers shall be completely stand-alone controllers for unitary type controls such as heat pumps, AC units, unit ventilators, fan coils, etc. All programs shall be resident in controller for complete stand-alone operation.

2. EEPROM technology shall be used for storage of program parameters such as setpoints, limits, etc., controllers utilizing a battery for backup of program parameters shall not be allowed.

PART 3 - EXECUTION

3.1 GENERAL

A. Furnish all fabrication, labor, materials, equipment, service, assembly, wiring, testing, installation, programming, software, and startup of the EMS engineering, necessary for a complete and operating temperature control and energy management system. This system shall meet the functional intent as specified herein for all equipment shown on the drawings.

B. After completion of the installation, the control contractor shall regulate and adjust all thermostats, dampers, control valves, motors and other equipment provided under this contract.

C. Identify each item mounted on the face of a control panel with an engraved phenolic label (¼" high engraved letters minimum). Identify each item of control equipment (except room sensors and thermostats) with stamped tape firmly attached to equipment.

D. All control adjustments shall be accessible without use of a ladder.

3.2 INSTALLATION

A. Electrical Work

1. All temperature control and interlock wiring shall be installed in conduit unless otherwise noted. Power or interlock wiring shall be run in separate conduit from sensor wiring.
2. Wiring shall conform to the National Electric Code.
3. All wiring of any nature in connection with the Temperature Control system, regardless of voltage, including temperature control wiring, interlocking and the like shall be included in the temperature control contractors work.
4. Power wiring to mechanical equipment and to site controller and telephone line from off site to modem by others.

B. Conduits

1. Apply thread sealant to all joints except in permanently dry locations. Where installed below floor slab and in contact with fill material, or underground and in contact with earth, shall be double wrapped with Scotchwrap #50, or equal at double ½ lap (four net layers) or encased in 3" of concrete. Follow any specific instructions or methods specified.
2. Termination of conduits in cabinets, wiring gutters or boxes shall be fitted with steel lock nut and insulated bushings. When grounding bushings are required use insulated grounding bushing. Where conduit connections are exposed to weather or excessive moisture they shall be fitted with insulated watertight sealing hub.
3. Cap conduit stubs with coupling, nipple and cap.
4. All cut ends of conduit shall be reamed to remove rough edges; where conduit is threaded in the field, an electrical conduit is threaded in the field; an electrical conduit thread cutting die with a taper shall be used.

C. Thermostats

1. All thermostats mounted on the inside of an exterior wall shall be properly insulated from the wall by a suitable insulating material. All thermostats mounted in outside air shall be installed behind fresh air louvers - out of view. All room thermostats shall be restricted range key operated without thermometers. Finish shall be standard unless noted otherwise on plans. Range and adjustment, etc. to meet C.C.R., Title 24 Requirements.
2. Identify each item mounted on the face of a control panel with an engraved phenolic label (¼" high engraved letters minimum). Identify each item of control equipment (except room sensors and thermostats) with stamped tape firmly attached to equipment.
3. Thermostats or sensors mounted on outside walls shall be mounted on 1" minimum

thickness rigid fiberglass insulating base, or equal.

3.3 RECORD DRAWINGS

A. Upon completion of the work provide a detailed description of the operation of each component and post in the mechanical room framed under glass or covered in plastic. Additionally, provide a complete set of drawings and application software on compact disk media. Drawings shall be as AutoCAD compatible files.

3.4 WARRANTY AND SERVICE

A. The control contractor shall provide a one year warranty from the date of installation acceptance, covering the temperature control system. Any manufacturing defects arising during this warranty period shall be corrected without cost to SMUD. The contractor shall respond to the job site within a 4-hour period for any emergency relating to the control system.

B. The control contractor shall provide two comprehensive periodic inspections during the first year after commissioning and customer acceptance. The control contractor shall include the Schedule of Maintenance inspections to be completed with the submittal. This coverage shall include all labor, travel time, mileage and materials required to perform the specific services detailed in the offering description.

3.5 OPERATOR INSTRUCTION

A. At such time acceptable performance of the EMS hardware and software has been established, the control contractor shall provide on-site operator instruction to SMUD's operating personnel. Operator instruction during normal working hours shall be performed by a competent representative familiar with the systems hardware, software and accessories.

B. At a time mutually agreed upon, the controls contractor shall give 16 hours of instruction to SMUD's designated personnel on the operation of the EMS and temperature control systems and describe its intended use with respect to the programmed functions specified. Operator orientation of the EMS shall include, but not limited to, the overall operation program, equipment functions (both individually and as part of the total integrated system), commands, systems generation, advisories, and appropriate operator intervention required in responding to the System's operation.

C. The training shall be in two sessions as follows

1. Initial Training
   a. One day, after system is started up, and at least one week before first acceptance test. The O&M's shall have been submitted at least two weeks prior to training so that SMUD's personnel can start to familiarize themselves with the system before classroom instruction.
2. First Follow-up
   a. One day, approximately two weeks after initial training, and before Formal Acceptance. These sessions will deal with more advanced topics and answer questions.
3. Warranty Follow-up
   a. 8 hours in no less than two-hour increments, to be scheduled at the request of SMUD during the warranty period. These sessions shall cover topics as requested by SMUD, including how to install additional points and add additional controllers.

PART 4 - SEQUENCE OF OPERATION

4.1 GENERAL

A. The following paragraphs summarize the required sequence of operations for the Sacramento Municipal Utility District Microgrid Plant and the new CH-3. The Plant controls contractor shall be responsible for supplying all necessary equipment; programming and associated materials need to meet the intentions of these specifications that are not owner supplied. The Central Plant Controls Contractor is Siemens, no equal.

B. The basic operating principal for the chilled water plant is to regenerate the TES tank with chilled water produced by the CHP absorption chiller all hours when the absorber is available and to use the electric chillers to regenerate the Thermal Energy Storage (TES) tank with chilled water during the user defined electrical service "Off Peak" hours. This stored chilled water is then made available, as needed, to the site air handlers during "On Peak" hours.

C. Whenever any the Tecogen Generators are operating and there is a call for heating, the priority shall be given to providing heat for the central plant. Whenever the Tecogen Generators are operating and there is not a call for heating the Absorption Chiller shall operate if at least two Tecogen Generators are operating.

D. A signal will be given to the Absorption Chiller as each Tecogen Generator is enabled. The mode of operation whether in heating mode, or cooling mode is determined by the call for heating by the site, or a call to recharge the TES tank.

4.2 ELECTRIC CHILLERS

A. The new chiller CH-3 will be added to the existing chiller lineup. CH-3 has PCHWP-3 and CDWP-3 associated with it. When the chiller is signaled to start the primary chilled water pump, (PCHWP-3) and the condenser water pump (CDWP-3) shall be enabled per the existing sequence of operation for electric chillers. The existing sequence of operation for CH-2 will now be the same for CH-3 and CH-2 will be on standby. If CH-3 has been operating for fourteen days, CH-2 will be used for all operations in lieu of CH-3 and CH-3 will be standby. This function will be able to be reset by the operator.

4.3 COOLING TOWERS (CH-3 OPERATION)

A. Cooling Tower Control for the new cooling towers CT-5 and CT-6 will be the same as for CT-1 through 4, all cooling tower fans are variable speed.

1. Condenser Water Temperature Control:
   a. The condenser isolation valves CV-56, 57, 58, 59, 62 and 63 will open, and CV-60 and 61 shall be closed, when the tower is enabled.
   b. When the assigned chiller is commanded on and the condenser water flow switch for the assigned chiller has proven, the cooling tower shall be enabled.
   c. When the condenser leaving water temperature rise to 59 degrees F (adjustable), the lead cooling tower fan shall be started. Its speed shall be modulated via the fans variable speed drive in order to maintain the desired condenser water temperature. As the lead fan reaches 90% of maximum capacity the second fan shall be enabled. The fans VFD's shall then utilize the same speed input. When the two fans combined capacity drops to 42% then the second fan shall be disabled and the fan shall be modulated to satisfy the condenser water setpoint, 59 degrees F. If the condenser water temperature continues to drop below setpoint the fan shall be disabled. Minimum speed for either fan shall never be lower than 22% (adjustable).
2. Operation of the cooling tower fans shall use feedback from the fans VFD's to determine fan status.
3. On a loss of communications with the DDCS, or an out of range signal, the fans shall operate in the last known state and an alarm shall be sent to the OWS, and the pager.
4. If any tower fan fails, an alarm shall be generated to the OWS and pager

5. The cooling tower fan's critical speed must be coordinated with the cooling tower manufacturer. The VFD shall not be allowed to control the fan at or close to this speed or a multiple thereof for any significant length of time.
6. CH-3 Diverting Valve CV-27:
   a. The diverting valve is located at CH-3 chiller. CV-27 shall direct the flow from the chiller back to the cooling towers if the condenser water entering temperature drops below 55 degrees F (adjustable). Conversely CV-27 shall direct the flow to the chiller if the condenser water leaving temperature rises above 57 degrees F (adjustable). Modulate the diverting valve to maintain 56 degrees F (adjustable) condenser water leaving water temperature.

4.4 ABSORPTION CHILLER ABCH-1

A. The absorption chiller hot water diverting valve CV-66 shall be controlled directly by the absorption chiller control panel.

B. The absorption chiller cooling tower, condenser water diverting valve, building heating system, chilled water system, main dump heat exchanger, hot water circulating pump, generator heat recovery system, controls and accessories are all required to be controlled by the DDCS.

C. Full information exchange, data acquisition and system control are to be made available to the DDCS as well as be made available locally at the central plant.

D. The absorption chiller controller (ACC) shall manage all the functions required for operation of the chiller and hot water diverting valve and provide status indication and data acquisition to the DDCS. The ACC shall be able to communicate control signals and information to both the DDCS.
   1. Prior to a call for cooling the DDCS shall confirm at least two engine generators are running, and start the PCHP-4, cooling tower, CDWP-4 and HWC-1. The DDCS shall then send a signal to the absorption chiller to initiate cooling when the absorption chiller is enabled and the DDCS receives a signal from the absorption chiller.

E. If heating priority is called for by DDCS then:
   1. The ABCH shall increase the chilled water setpoint until heating priority is satisfied
   2. Chilled water setpoint DDC adjustable range shall be from 42 to a maximum of 54 F.
   3. Initiate chiller start-up sequence through the chiller controller.

F. If the absorber is overloaded and the heat recovery loop temperature goes below setpoint, the ACC shall increase the chilled water setpoint until the heat recovery loop setpoint is again met.

G. During shut down of the absorption chiller, the ACC shall provide notification of 'dilution on' and 'dilution off' to the DDCS to allow proper control of chilled and hot water loop pumps, these pumps shall maintain operation until the ABCH has signaled that the pumps may be disabled. The DDCS shall control the condenser system which may still remain engaged after chiller shut down in order to manage heat rejection and avoid crystallization.

H. Reversing valve operation, the DDCS shall not operate the reversing valve when ABCH-1 is operating.

4.5 ABSORPTION CHILLER COOLING TOWER OPERATION ABCH-1

A. Whenever the absorption chiller is operating CT-5 shall be dedicated to ABCH-1.

B. Cooling Tower Control for the new cooling tower CT-5 will be as follows.
   1. Condenser Water Temperature Control CT-5:
      a. The cooling tower shall be enabled as a prerequisite to starting the absorption chiller.
      b. The condenser isolation valves CV-58, 60, 61, 63, and 68 will open, CV-56, 57, 59, and 62, and will remain closed, and pump CDWP-4 shall be started when the tower is enabled.

c. When the absorption chiller is commanded on and the condenser water flow switch for the assigned chiller has proven, the chiller shall be enabled.
d. When the condenser leaving water temperature rises above the cooling tower setpoint (adjustable), the cooling tower fan shall be started. Its speed shall be modulated via the fans variable speed drive in order to maintain the desired condenser water temperature setpoint. If the condenser water temperature continues to drop below setpoint the fan shall be disabled.
e. Operation of the cooling tower fan shall use feedback from the fan's VFD's to determine fan status.
f. On a loss of communications with the DDCS, or an out of range signal, the fan shall operate in the last known state and an alarm shall be sent to the OWS, and the pager.
g. If the tower fan fails, an alarm shall be generated to the OWS and pager.
h. The cooling tower fan's critical speed must be coordinated with the cooling tower manufacturer. The VFD shall not be allowed to control the fan at or close to this speed or a multiple thereof for any significant length of time.

2. ABCH-1 Condenser Water Diverting Valve CV-66
   a. The diverting valve is located at ABCH-1 and will serve to increase the condenser water temperature whenever it is below the minimum entering condenser water temperature setpoint (adjustable) for the absorption chiller. CV-66 shall direct a portion of the flow from the condenser water leaving the chiller back to the inlet of CDWP-4 if the condenser water entering temperature drops below setpoint. Conversely, CV-66 shall direct the flow to the cooling tower if the entering condenser water temperature rises above the setpoint. Modulate CV-66 to maintain the minimum entering condenser water at or above setpoint temperature.
3. PJWR temperature control
   a. Control valve CV-64 flow shall be limited to allow 250 gpm of water to the cooling tower, and CDWP-4 shall adjust flow to 850 gpm whenever the PJWR temperature rises above setpoint. The valve opening control signal limit should be adjustable.
   b. The reversing valve shall not be operated when the Absorption Chiller is operating, it shall remain locked out until the Absorption Chiller has been commanded off.

4.6 TECOGEN GENERATORS

A. The generators will be enabled by the DDCS system from the Central Plant. The generators through a contact closure will signal the DDCS that the generator is operating. Whenever one or more of the generators have been started AHWP-1 shall be signaled to operate. If there is not a call for cooling or heating see paragraph 4.11 when the absorption chiller is off.

B. If either two or three of the generators are running, and there is a call to generate chilled water, PCHWP-4 and CDWP-4 will be signaled to start and a chiller start signal will be given to the absorption chiller.

C. If any of the generators are operating and there is a call for heating, HXP-2 shall be enabled.

4.7 HEAT RECOVERY LOOP PUMP CONTROL (AHWP-1A AND AHWP-1B)

A. AHWP-1A is lead pump and AHWP-1B is the lag pump (Controlled by DDCS). If the lead pump has been operating for 14 days, the next time it is disabled, the lag pump shall become the lead pump and whenever a generator is started it shall be enabled.

4.8 ABSORPTION CHILLER PUMP CONTROL (CDWP-4A, CDHWP-4B)

A. CDWP-4A is lead pump and CDWP-4B is the lag pump (Controlled by DDCS). If the lead pump has been operating for 14 days, the next time it is disabled, the lag pump shall become the lead pump and whenever a generator is started it shall be enabled.

4.9 ABSORPTION CHILLER PUMP CONTROL (PCHWP-4A, PCHWP-4B)

A. PCHWP-4A is lead pump and PCHWP-4B is the lag pump (Controlled by DDCS). If the lead pump has been operating for 14 days, the next time it is disabled, the lag pump shall become the lead pump and whenever a generator is started it shall be enabled.

4.10 SPACE HEATING HEAT EXCHANGER PUMP CONTROL (HXP-2A AND HXP-2B)

A. HXP-2A is lead pump and HXP-2B is the lag pump (Controlled by DDCS). If the lead pump has been operating for 14 days, the next time it is disabled, the lag pump shall become the lead pump and whenever a call for heating it shall be enabled.

4.11 SPACE HEATING HEAT EXCHANGER CONTROL (HX-2)

A. Heat exchanger operation: The space heating heat exchanger provides heat to the facility's heating loop. The facility DDCS shall control flow through the heat exchanger in response to load requests, however, the heat exchanger bypass loop and control valve **(CV-65?)** will be utilized to maintain minimum heat recovery loop setpoint at all times and in case of overloading by the DDCS shall take precedence and maintain temperature according to setpoint. The DDCS shall maintain the heat recovery loop temperature within 1.5 F of setpoint

1. CV-70 should be controlled to maintain space heating loop setpoint temperature while also ensuring that the heat recovery loop temperature is not reduced below setpoint. If HX-2 primary side (heat recovery loop) leaving water temperature is below setpoint (Tecogen maximum jacket water return temperature) then valve CV-70 shall go to full bypass to avoid degradation of the heat recovery loop temperature.
2. Whenever the generators are operating and there is a call for heating, the heat exchanger pump, HXP-2 shall be enabled and the heat exchanger control valve CV-70 shall modulate to maintain space heating loop setpoint. The setpoint shall be 180 degrees F (adjustable) and whenever there is a call for heating it shall be enabled.

4.12 HX-3, DUMP HEAT EXCHANGER OPERATION (ISLANDING, OR MICROGRID MODE)

A. Heat exchanger operation: The DDCS shall control the CHP system dump heat exchanger which will use the CT-5, and CDWP-4 to provide condenser water to cool the engine. The DDCS will provide controls to meet the engine jacket water return setpoint if the thermal loads are less than the heat output of the engines and there is heat left in the system which shall be rejected to the cooling tower through the dump heat exchanger. The DDCS shall maintain the heat recovery loop temperature within 1.5 degrees F of setpoint

1. Whenever the generators are operating and there is not a call for heating, and the absorption chiller is not operating, CDWP-4 shall be enabled, controlled to provide 250 gpm of condenser water flow, and control valve CV-64 shall divert condenser water flow to the primary side (cooling water) of HX-3. CV-64 shall be controlled to maintain HX-3 secondary side (heat recovery loop) leaving water temperature at setpoint (Tecogen maximum jacket water return temperature).
2. Whenever the generators are operating and there is a call for heating, and the absorption chiller is not operating, CDWP-4 shall be enabled if the entering water temperature on the secondary side of HX-3 is above setpoint. Control valve CV-64 shall divert condenser water flow to the primary side (cooling water) of HX-3. CV-64 shall be controlled to maintain HX-3 secondary side (heat recovery loop) leaving water temperature at setpoint (Tecogen maximum jacket water return temperature). CDWP-4 shall be started upon this condition and shall be run for a minimum of **10 ?** minutes before being disengaged even if HX-3 secondary side leaving water temperature has reached setpoint.
3. Whenever the generator are operating and there is or is not a call for heating, and the absorption chiller is operating, CDWP-4 shall be enabled and control valve CV-64 shall

divert condenser water flow to the primary side (cooling water) of HX-3. CV-64 shall be controlled to maintain HX-3 secondary side (heat recovery loop) leaving water temperature at setpoint (Tecogen maximum jacket water return temperature)

4.13 DRY COOLER ACDC-1

A. The DDCS shall monitor the operation of the dry cooler should the dry cooler fail to operate, as reported to the DDCS system from a digital input signal taken from the dry cooler, DDCS shall initiate an alarm message at the alarm printer at the OWS.

B. Cooling Water Supply Temperature Control

1. Cooling water supply setpoint shall be between 120 degrees F and 50 degrees F. The temperature control valve (CV-71) shall modulate to maintain a minimum of 50 degrees F.
2. If the temperature rises above 100 degrees F the first fan shall be enabled. If the temperature continues to rise the second fan shall be enabled. When the temperature drops below 95 degrees F the second fan shall be disabled. When the temperature continues to drop to 90 degrees F the first fan shall be disabled.

4.14 POINTS LIST

Note: The following parts summarize the minimum required points for the SMUD Microgrid Project located at the SMUD Central Plant. Controls contractor shall be responsible for supplying all necessary equipment, programming and associated materials needed to meet the intentions of the sequence of operations. All necessary points listed below, required for operation, and required to meet the sequence of operations shall be included in bid. Coordinate with the mechanical contractor to ensure all hardware items have been included.

4.15 DEFINITIONS:

AI: Analog Input
AO: Analog Input
DI: Digital Input
DO: Digital Output
V: Virtual Point
H: Hardware Point
OPB: Open Protocol Bus

4.16 THE POINTS LIST INCLUDES, BUT NOT LIMITED TO THE FOLLOWING

Point or Action Name	**Local**	**Equipment Graphics**	**Graphics status: on/off alarm**	**Text –Mapped to graphic display**	**OWS**	**Event log**	**Virtual**	**OPB**	**AI**	**AO**	**DI**	**DO**	**AI - analog input from sensor** **AO - analog output to hardware** **DI - input from point** **DO -output to hardware** **V - virtual point** **H - hard wired** **OPB-open protocol bus** **Local-can be viewed at local standalone controller** **Text - mapped to graphics window** **Comments**
CH-3													
Chiller Failure		X	X	X	X	X						X	
Chiller Status	X	X	X										
Chiller Start/Stop	X												
Condenser Water Isolation Valves		X	X									X	
Chiller Starts / Run Hours	X						X						
Chiller KW	X												
Phase loss	X												
Phase imbalance	X												
Phase reversal	X												
Under voltage	X												
Motor overload	X												
Momentary power loss protection with auto restart	X												
Starter contactor fault protection	X												
Starter transition failure	X												

Point or Action Name	Local	Equipment Graphics	Graphics status: on/off alarm	Text –Mapped to graphic display	OWS	Event log	Virtual	OPB	AI	AO	DI	DO	AI - analog input from sensor AO - analog output to hardware DI - input from point DO -output to hardware V - virtual point H - hard wired OPB-open bus protocol Local-can be viewed at local standalone controller Text - mapped to graphics window Comments
Entering evaporator water temperatures	X	X		X	X	X							
Leaving evaporator water temperatures	X	X		X	X	X							
Entering condenser water temperatures	X	X		X	X	X							
Leaving condenser water temperatures	X	X		X	X	X							
Compressor Motor Winding Temperature 1, 2, 3	X												
Saturated evaporator and condenser refrigerant temperatures	X												
Condenser refrigerant pressure	X												
Evaporator and condenser refrigerant pressure	X												
Oil Temperature	X												
Oil Tank pressure	X												
Oil pump discharge pressure	X												
Differential oil pressure	X												
Compressor motor starts and running hours	X												
Compressor motor current, by phase	X												
Compressor motor percent RLA	X	X		X									

Point or Action Name	Local	Equipment Graphics	Graphics status: on/off alarm	Text –Mapped to graphic display	OWS	Event log	Virtual	OPB	AI	AO	DI	DO	AI - analog input from sensor AO - analog output to hardware DI - input from point DO -output to hardware V - virtual point H - hard wired OPB-open bus protocol Local-can be viewed at local standalone controller Text - mapped to graphics window Comments
Purge compressor suction temperature	X												
Purge pump out rate	X												
Purge pump out time last or current cycle	X												
Total Purge pump out time	X												
Total Purge run time	X												
Chilled water setpoint and setpoint source	X	X		X									
Electrical current limit setpoint and setpoint source	X												
Current chiller operating mode	X												
Chiller Tonnage	X	X		X									
Chiller diagnostics including a time and date	X	X		X	X	X							
Rotation (sequencing) information		X		X			X						
Bearing temperature	X				X	X							
Diverting Valve	X	X	X	X									Monitoring only, controlled by chiller

CHW Pump PCHWP-3													
Pump Start / Stop	X	X	X									X	
Pump Alarm	X	X	X	X						X			Alarm through a current sensor at the pump

Point or Action Name	Local	Equipment Graphics	Graphics status: on/off alarm	Text –Mapped to graphic display	OWS	Event log	Virtual	OPB	AI	AO	DI	DO	AI - analog input from sensor AO - analog output to hardware DI - input from point DO -output to hardware V - virtual point H - hard wired OPB-open bus protocol Local-can be viewed at local standalone controller Text - mapped to graphics window Comments
CT-5 and CT-6													
Condenser water leaving temp	X	X		X					X				
Condenser water setpoint		X		X			X						
Cooling Tower Isolation Valves	X	X	X										
Fan VFD Start / Stop	X	X	X									X	
Fan VFD % motor speed	X	X	X	X						X			
Fan VFD Alarm	X	X	X		X	X					X	X	
Flow Meter FT-8	X	X	X	X					X				
Flow Setpoint	X	X		X	X		X						

Pump CDWP 3													
Pump Start/Stop		X	X										
Pump Alarm	X	X	X	X							X	X	Alarm through a current sensor at the pump

PCHWP 4A and 4B													
Pump Start / Stop	X	X	X									X	
Pump Lead/Lag							X						
Pump % motor speed	X	X	X	X						X			
Pump VFD Alarm	X	X	X		X	X					X	X	
Flow Meter FT-5	X	X	X	X					X				
Flow Setpoint	X	X		X	X		X						
Temperature Transmitter	X	X	X	X					X				

Point or Action Name	Local	Equipment Graphics	Graphics status: on/off alarm	Text –Mapped to graphic display	OWS	Event log	Virtual	OPB	AI	AO	DI	DO	AI - analog input from sensor AO - analog output to hardware DI - input from point DO -output to hardware V - virtual point H - hard wired OPB-open bus protocol Local-can be viewed at local standalone controller Text - mapped to graphics window Comments
CDWP 4A and 4B													
Pump Start / Stop	X	X	X									X	
Pump Lead/Lag							X						
Pump % motor speed	X	X	X	X						X			
Pump VFD Alarm	X	X	X		X	X					X	X	
Flow Meter FT-9	X	X	X	X					X				
Flow Setpoint	X	X		X	X		X						
Temperature Transmitter	X	X	X	X					X				

HXP-1 & 2													
Pump Start / Stop	X	X	X									X	
Pump Lead/Lag							X						
Pump % motor speed	X	X	X	X						X			
Pump VFD Alarm	X	X	X		X	X					X	X	
Flow Meter FT-4	X	X	X	X					X				
Flow Setpoint	X	X		X	X		X						
Temperature Transmitter	X	X	X	X					X				
CV-70	X	X	X	X						X			

AHWP-1 and 2													
Pump Start / Stop	X	X	X									X	
Pump Lead/Lag							X						
Pump % motor speed	X	X	X	X						X			
Pump VFD Alarm	X	X	X		X	X					X	X	
Flow Meter FT-7	X	X	X	X					X				
Flow Setpoint	X	X		X	X		X						

Point or Action Name	Local	Equipment Graphics	Graphics status: on/off alarm	Text –Mapped to graphic display	OWS	Event log	Virtual	OPB	AI	AO	DI	DO	AI - analog input from sensor AO - analog output to hardware DI - input from point DO -output to hardware V - virtual point H - hard wired OPB-open bus protocol Local-can be viewed at local standalone controller Text - mapped to graphics window Comments
HWC 1A and1B													
Pump Start / Stop	X	X	X									X	
Pump Lead/Lag							X						
Pump % motor speed	X	X	X	X						X			
Pump VFD Alarm	X	X	X		X	X					X	X	
Flow Meter FT-6	X	X	X	X					X				
Flow Setpoint	X	X		X	X		X						
Temperature Transmitter	X	X	X	X					X				
CV-65	X	X	X	X						X			

HX-2													
Temperature Transmitter	X	X	X	X					X				
Temperature Transmitter	X	X	X	X					X				
Temperature Transmitter	X	X	X	X					X				
Temperature Transmitter	X	X	X	X					X				

HX-3													
Temperature Transmitter	X	X	X	X					X				
Temperature Transmitter	X	X	X	X					X				
Temperature Transmitter	X	X	X	X					X				
Temperature Transmitter	X	X	X	X					X				

ABCH-1

Sr. No.	PLC Address	Description	MODBUS ADDRESS	Scaling Factor
		M/C PARAMETERS		
1	VW1550	Chilled Water Inlet temp	40031	m = 0.0562500 & c = -418
2	VW1552	Chilled water Outlet temp	40032	m = 0.0562500 & c = -418
3	VW1554	Cooling Water Inlet Temp	40033	m = 0.0562500 & c = -418
4	VW1556	U-Tube Temp	40034	m = 0.0562500 & c = -418
5	VW1558	Gen Temp	40035	m = 0.0562500 & c = -418
6	VW1560	HOT Water in temp	40036	m = 0.0562500 & c = -418
7	VW1562	HOT Water Out temp	40037	m = 0.0562500 & c = -418
8	VW1564	Cooling Water Outlet Temp	40038	m = 0.0562500 & c = -418
9	VW1566	Vacuum	40039	m = 0.0296875 & c = -190
10	VW1568	SPARE	40040	N.A
11	VW1570	SPARE	40041	N.A
12	VW1572	SPARE	40042	N.A
13	VW1574	CV Opening	40043	N.A
		SETPOINTS		
1	VW1060	C.T.Fan ON/OFF Setpoint	40001	m = 0.0562500 & c = -418
2	VW1062	C.T.Fan hysterisis	40002	m = 0.0562500 & c =0
3	VW1064	SPARE	40003	N.A
4	VW1066	L-out Diff.set point	40004	m = 0.0562500 & c =0
5	VW1068	L-out hysterisis	40005	m = 0.0562500 & c =0
6	VW1070	SPARE	40006	N.A
7	VW1072	CV opening limit	40007	N.A
8	VW1074	SPARE	40008	N.A
9	VW1076	SPARE	40009	N.A
10	VW1078	Machine Setpoint	40010	m = 0.0562500 & c = -418
11	VW1080	Gen Diff SP to close CV	40011	m = 0.0562500 & c =0
12	VW1082	Hysterisis	40012	m = 0.0562500 & c =0
13	VW1084	SPARE	40013	N.A
14	VW1086	SPARE	40014	N.A
15	VW1088	Internal PLC software antifreeze	40015	m = 0.0562500 & c = -418
16	VW1090	Internal PLC software antifreeze hysterisis	40016	m = 0.0562500 & c =0
17	VW1092	Cooling water inlet temp. low set point	40017	m = 0.0562500 & c = -418
18	VW1094	Cooling water inlet temp. low hysterisis	40018	m = 0.0562500 & c =0
19	VW1096	Gen trip set point	40019	m = 0.0562500 & c = -418
20	VW1098	Gen hysterisis	40020	m = 0.0562500 & c =0
21	VW1100	H-out Diff set point.	40021	m = 0.0562500 & c =0
22	VW1102	H-out hysterisis.	40022	m = 0.0562500 & c =0
23	VW1104	SPARE	40023	N.A
24	VW1106	SPARE	40024	N.A
25	VW1108		40025	m = 0.0562500 & c = -418
26	VW1110		40026	m = 0.0562500 & c = -418
27	VW1112	SPARE	40027	N.A
28	VW1114	SPARE	40028	N.A
29		SPARE	40029	N.A
30		SPARE	40030	N.A

ALARMS				
1	M13.0	Chilled Water Pump Interlock Trip	40044.8	NA
2	M13.1		40044.9	
3	M13.2	Chilled Water D P Switch Trip	40044.10	
4	M13.3	Antifreeze Thermostat Trip	40044.11	
5	M13.4		40044.12	
6	M13.5	Purge Pump not developing Vacuum	40044.13	
7	M13.6	Absorbent Pump Trip	40044.14	
8	M13.7	Refrigerant Pump Trip	40044.15	
9	M14.0	Purge Pump trip	40044.0	
10	M14.1	Generator Temp High	40044.1	
11	M14.2		40044.2	
12	M14.3		40044.3	
13	M14.4		40044.4	
14	M14.5	Absorbent Pump Not Responding	40044.5	
15	M14.6	Refrigerant Pump Not Responding	40044.6	
16	M14.7		40044.7	
17	M15.0	Chilled Water Inlet Temp Sensor Error	40045.8	
18	M15.1	Chilled Water Outlet Temp Sensor Error	40045.9	
19	M15.2	Cooling Water Inlet Temp Sensor Error	40045.10	
20	M15.3	U-Tube Temp Sensor Error	40045.11	
21	M15.4	GEN Temp Sensor Error	40045.12	
22	M15.5	HW IN temp sensor Error	40045.13	
23	M15.6	HW OUT temp sensor Error	40045.14	
24	M15.7	Cooling Water Outlet Temp Sensor Error	40045.15	
25	M16.0	SPARE	40045.0	
26	M16.1	SPARE	40045.1	
27	M16.2	Internal Antifreeze	40045.2	
28	M16.3	SPARE	40045.3	
29	M16.4	SPARE	40045.4	
30	M16.5	SPARE	40045.5	
31	M16.6	SPARE	40045.6	
32	M16.7	SPARE	40045.7	
33	M17.0	Power Failure	40046.8	
34	M17.1	SPARE	40046.9	
35	M17.2	SPARE	40046.10	
36	M17.3	Cooling Water Inlet Temp Low	40046.11	
37	M17.4	SPARE	40046.12	
38	M17.5	SPARE	40046.13	
39	M17.6	SPARE	40046.14	
40	M17.7	SPARE	40046.15	
41	M18.0	SPARE	40046.0	
42	M18.1	SPARE	40046.1	
43	M18.2	SPARE	40046.2	
44	M18.3	SPARE	40046.3	
45	M18.4	SPARE	40046.4	
46	M18.5	SPARE	40046.5	
47	M18.6	SPARE	40046.6	
48	M18.7	SPARE	40046.7	

DIGITAL INPUTS				
1	I0.0	Chilled Water Pump Feedback	10001	NA
2	I0.1		10002	
3	I0.2	Chilled Water D.P. Switch	10003	
4	I0.3	Antifreeze Thermostat	10004	
5	I0.4	Absorbent Pump Feedback	10005	
6	I0.5	Absorbent Pump Overload	10006	
7	I0.6	Refrigerant Pump Feedback	10007	
8	I0.7	Refrigerant Pump Overload	10008	
9	I1.0	Purge Pump Overload	10009	
10	I1.1	Evaporator Level Relay	10010	
11	I1.2	SPARE	10011	
12	I1.3	SPARE	10012	
13	I1.4	SPARE	10013	
14	I1.5	Remote ON/OFF	10014	
15	I1.6		10015	
16	I1.7		10016	
17	I2.0		10017	
18	I2.1		10018	
19	I2.2		10019	
20	I2.3	SPARE	10020	
21	I2.4	SPARE	10021	
22	I2.5	SPARE	10022	
23	I2.6	SPARE	10023	
24	I2.7	SPARE	10024	

DIGITAL OUTPUTS				
1	Q0.0	Hooter	00001	NA
2	Q0.1	Refrigerant Pump	00002	
3	Q0.2	Purge Pump	00003	
4	Q0.3	Remote Machine ON	00004	
5	Q0.4	Remote Machine Trip	00005	
6	Q0.5	Chilled Water Permissive	00006	
7	Q0.6	Cooling Water Permissive	00007	
8	Q0.7	Cooling Tower Fan Permissive	00008	
9	Q1.0	Absorbent Pump	00009	
10	Q1.1		00010	
11	Q1.2		00011	
12	Q1.3	Auto Purge Solenoid valve-1	00012	
13	Q1.4	Auto Purge Solenoid valve-2	00013	
14	Q1.5	Auto Purge Solenoid valve-3	00014	
15	Q1.6	SPARE	00015	
16	Q1.7	SPARE	00016	

Port-0 shall be used for MODBUS communication with
Pin-3:Signal B (RXD/TXD+) and
Pin-8:Signal A (RXD/TXD-)

COMMUNICATION PARAMETERS
RS 485 TWO WIRE - RTU SLAVE ADDRESS
BAUD RATE : 9600
STOP BITS : ONE
PARITY : EVEN
DATA BIT : 8

Point or Action Name	Local	Equipment Graphics	Graphics status: on/off alarm	Text –Mapped to graphic display	OWS	Event log	Virtual	OPB	AI	AO	DI	DO	AI - analog input from sensor AO - analog output to hardware DI - input from point DO -output to hardware V - virtual point H - hard wired OPB-open bus protocol Local-can be viewed at local standalone controller Text - mapped to graphics window Comments
Tecogen Generators													
Generator Start/Stop	X	X	X									X	
Power Setpoint	X	X										X	
Temperature Setpoint	X	X	X							X			
Generator Alarm	X	X	X								X		
Equivalent Full Load Hours	X	X	X								X		
BTU Meter	X									X		X	Requires input to generator of HWS&R, and pulsed input of flow meter.
Power Output	X	X	X							X			
Supply Water Temp.	X	X	X						X				

END OF SECTION

SECTION 15990 - TESTING, ADJUSTING, & BALANCING

PART 1 - GENERAL

1.1 RELATED DOCUMENTS

A. The requirements of the GENERAL CONDITIONS, SUPPLEMENTARY CONDITIONS, SPECIAL CONDITIONS and DIVISION 1 GENERAL REQUIREMENTS, apply to the work of this section.

1.2 SUMMARY

A. Work Included: This Section describes balancing requirements for all phases of HVAC work. The work includes complete balancing, adjusting and testing of the air and hydronic equipment and systems.

1.3 RELATED SECTIONS

A. All mechanical sections.

1.4 QUALITY ASSURANCE

A. Testing and Balancing shall be performed in complete accordance with AABC National Standards for Field Measurement and Instrumentation only by an AABC or NEBB licensed contractor.

B. Work shall be performed by an independent test and balance agency that specializes in, and whose business is limited to testing and balancing of air conditioning systems.

C. Instruments used for testing and balancing of systems shall have been calibrated within a period of six (6) months and shall be checked for accuracy prior to start of work.

1.5 SUBMITTALS

A. Provide to SMUD and Contractor with four (4) copies of a balancing agenda prior to start of balancing work including:

1. General description of each air system with its associate equipment and operational cycles for winter heating, reheat, humidification, and cooling. Where different cycles are used for day and night time operation, describe separately.
2. A complete list of all flow and terminal measurements to be performed.
3. Agenda shall also include specific procedures for determining test parameters for flow. Specify type of instruments to be used, method of instrument application and air terminal correction factors for:
   a. Flow direction (supply, return, or exhaust).
   b. Furnish a copy of agenda to the engineer and SMUD prior to start of work, including qualifications of key personnel assigned to the project.

B. Provide four (4) copies of final report, (two to SMUD and two to the Contractor) containing information outlined in AABC and in Part 3 - EXECUTION.

1.6 NOTIFICATION AND SCHEDULING

A. A pre-balance conference shall be held prior to start as scheduled by the Contractor. Attendees at the meeting shall include representatives of the Balancing Contractor, General Contractor, Mechanical Sub-contractor, Control Sub-contractor, SMUD and Mechanical Engineer.

B. The schedule for testing and balancing the HVAC system shall be established in coordination with the Balancing Contractor on a critical path network.

C. The Balancing Contractor is responsible for initiating this continuing coordination to determine schedule for final testing and balancing services.

1.7 COORDINATION WITH OTHER TRADES

A. To bring the HVAC system into a state of readiness for testing, adjusting and balancing, the Mechanical Contractor shall perform the following:

1. Ensure that heating and cooling systems and all associated apparatus, such as heat exchangers, pumps, valves are correctly operating and free of vibration.

PART 2 - PRODUCTS

2.1 INSTRUMENTS & TOOLS

A. Furnish all instrumentation and tools required to perform a complete air and water balance of all systems on this project.

2.2 FLOW METERING SYSTEM

A. Use flow metering systems specified and/or furnished to perform air and water balance.

PART 3 - EXECUTION

3.1 GENERAL

A. Coordinate required locations of duct test openings and damper locations specified in other sections.

B. Coordinate work done by testing and balancing agency with work of other trades.

C. Plan Check and Review:

1. Review location and type of valves and other equipment.
2. Review location, type and size of balancing valve, flow metering stations and automatic control valves in the water flow system.
3. Review location of pressure sensors in the water distribution systems.
4. Review automatic control systems as they affect the test and balance procedure.
5. Review piping shop drawings to verify the installation of flow control devices.

D. Job Site Inspections

1. Check for necessary balancing hardware (flow meters, valves, pressure taps, thermometer wells, etc.) to determine if they are installed properly and readily accessible.

3.2 TESTING

A. Testing equipment shall be furnished by the contractor; testing personnel shall be competent to conduct the tests.

B. Should any piece of an apparatus or any material or work fail in any of the tests, it shall be immediately removed and replaced by new material, and portion of the work replaced shall again be tested by Contractor at his own expense.

3.3 OPERATIONAL TESTS AND ADJUSTMENTS

A. Upon completion of the work, all equipment and systems shall be operated and tested for a period of at least three consecutive days to demonstrate their satisfactory overall operation. On the last day of this period, the Contractors shall arrange for an acceptance test and final inspection by SMUD. All necessary adjustments and corrections to the systems shall be made prior to acceptance test so that the systems are operating smoothly and properly and absolutely ready before check and acceptance.

B. Coordination of all items associated with the mechanical systems is the responsibility of the mechanical contractor, including all wiring in connection with mechanical equipment, and all temperature control work. It shall be this contractor's responsibility to determine that his systems, equipment and apparatus are properly wired and controlled and completely ready for satisfactory operation and test.

C. Operating and safety controls shall be tested at least three times, under ambient design conditions.

3.4 WATER BALANCE

A. Hydronic System Balancing

1. Calibration and testing of Hydronic system in conformance with AABC recommendations.

B. Automatic control valve shall be set for full flow conditions during balancing procedures.
   1. Set pumps to design GPM quantities.
   2. Upon completion of flow ratings and coil adjustments, mark all settings and record all data.
   3. Recorded data shall include:
      a. Inlet and leaving temperatures at all coils and heating and cooling equipment.
      b. Pressure drop at each coil including coil bypass.
      c. Pump operating suction and discharge pressure and final total dynamic pump head.
      d. Rated and actual running amperage of pump motors.
   4. Venturies and calibrated orifices with portable or permanent flow meters shall be used to balance the water flows. When above equipment is not installed, obtain water flow balance by measurements of temperature differential across the various coils or elements.
   5. Automatic control valve shall be set for full flow conditions during balancing procedures.

C. Motor and Starters
   1. Measure the ampere reading of each motor input after final adjustments have been made. Measure the ampere reading of each electrical heater input after final adjustments have been made.
   2. Tabulate magnetic starters size, type and manufacturer with heater strip size and type for starters not in motor control centers.

3.5 OWNERS INSTRUCTION

A. Review the installation of all equipment and controls with SMUD after all systems are operating automatically. Instruct SMUD in the adjustment of all control and equipment devices. Allow a minimum of 8 hours for this instruction.

END OF SECTION

APPENDIX E:
Electrical Documents

Appendix E - Electrical Documents

Microgrid Demonstration Project

Electrical Specifications

Table of Contents

Page Count

ELECTRICAL CONSTRUCTION SPECIFICATIONS…… 2

SECTION 26 05 00 - BASIC ELECTRICAL REQUIREMENTS……. 3-10
SECTION 26 05 19 - LOW-VOLTAGE ELECTRICAL POWER CONDUCTORS AND CABLE…….. 11-15
SECTION 26 05 26 - GROUNDING AND BONDING FOR ELECTRICAL SYSTEMS…. 16-19
SECTION 26 05 29 - HANGERS AND SUPPORTS FOR ELECTRICAL SYSTEMS…... 20-21
SECTION 26 05 36 - CABLE TRAYS FOR ELECTRICAL SYSTEMS……. 22-24
SECTION 26 05 39 - UNDERFLOOR RACEWAYS FOR ELECTRICAL SYSTEMS…… 25-26
SECTION 26 05 43 - UNDERGROUND DUCTS AND RACEWAYS FOR ELECTRICAL SYSTEMS……. 27-30
SECTION 26 05 53 - IDENTIFICATION FOR ELECTRICAL SYSTEMS……. 31-33

ELECTRICAL EQUIPMENT SPECIFICATIONS…….. 34

ITEM 1 - CENTRAL UTILITY PLANT MAIN SERVICE SWITCHBOARD EXTENSION.. 35-48
ITEM 2 - MICROGRID SWITCHBOARD……. 49-62
ITEM 3 - MICROGRID MOTOR CONTROL CENTER SPECIFICATION…….. 63-73
ITEM 4 -GENERATOR SWITCHBOARD MOTOR CONTROL CENTER SPECIFICATION 74-83

SMUD 300KW MICROGRID PROJECT
ELECTRICAL CONSTRUCTION SPECIFICATIONS

This package contains the electrical construction specifications for the SMUD Microgrid Project. Sections included and Titles are listed below:

Section	Description
26 05 00	Basic Electrical Requirements
26 05 19	Low Voltage Electrical Power Conductors and Cable.
26 05 26	Grounding and Bonding For Electrical Systems
26 05 29	Hangers and Supports for Electrical Systems
26 05 36	Cable Trays for Electrical Systems
29 05 39	Underfloor Raceways for Electrical Systems
26 05 43	Underground Ducts and Raceways for Electrical Systems
26 05 53	Identification for Electrical Systems
26 05 73	Short Circuit/Coordination Study and Arc Flash Hazard Study
26 27 02	Equipment Wiring Systems
26 29 23	Variable Frequency Drives

SECTION 26 05 00 **-** BASIC ELECTRICAL REQUIREMENTS

PART 1 - GENERAL

The electrical work included in all other divisions is the responsibility of the contractor performing the division 26 work unless noted otherwise.

1.01 PROJECT OVERVIEW

1.02 SCOPE

The work under this section includes basic electrical requirements, which are applicable to all Division 26 sections. This section includes information common to two or more technical specification sections or items that are of a general nature, not conveniently fitting into other technical sections. Included are the following topics:

1.03 Project Overview

Scope
Reference Standards
Regulatory Requirements
Quality Assurance
Continuity of Existing Services and Systems
Protection of Finished Surfaces
Approved Electrical Testing Laboratories
Sealing and Firestopping
State and/or User Agency Furnished Equipment
Work by State and/or User Agency
Provisions for Future Work
Intent
Omissions
Submittals
Project/Site Conditions
Work Sequence and Scheduling
Work by Other Trades
Offsite Storage
Request and Certificate for Payment
Salvage Materials
Certificates and Inspections
Operating and Maintenance Data
Record Drawings

PART 2 - PRODUCTS
Access Panels and Doors
Identification
Sealing and Firestopping

PART 3 - EXECUTION
Excavation and Backfill
Concrete Work
Cutting and Patching
Building Access
Equipment Access
Coordination
Sleeves
Sealing and Firestopping
Housekeeping and Clean Up
Agency Training

1.04 REFERENCE STANDARDS

Abbreviations of standards organizations referenced in this and other sections are as follows:

ANSI American National Standards Institute

ASTM	American Society for Testing and Materials
EPA	Environmental Protection Agency
ETL	Electrical Testing Laboratories, Inc.
IEEE	Institute of Electrical and Electronics Engineers
IES	Illuminating Engineering Society
ISA	Instrument Society of America
NBS	National Bureau of Standards
NEC	National Electric Code
NEMA	National Electrical Manufacturers Association
NESC	National Electrical Safety Code
NFPA	National Fire Protection Association
UL	Underwriters Laboratories Inc.

1.05 REGULATORY REQUIREMENTS

All work and materials are to conform in every detail to applicable rules and requirements of the California Electrical Code, the National Electrical Code (ANSI/NFPA 70), other applicable National Fire Protection Association codes, the National Electrical Safety Code, and present manufacturing standards (including NEMA).

1.06 QUALITY ASSURANCE

Where equipment or accessories are used which differ in arrangement, configuration, dimensions, ratings, or engineering parameters from those indicated on the contract documents, the contractor is responsible for all costs involved in integrating the equipment or accessories into the system and the assigned space and for obtaining the performance from the system into which these items are placed.

Manufacturer references used herein are intended to establish a level of quality and performance requirements unless more explicit restrictions are stated to apply.

All materials, except medium voltage equipment and components, shall be listed by and shall bear the label of an approved electrical testing laboratory. If none of the approved electrical testing laboratories has published standards for a particular item, then other national independent testing standards, if available, applicable, and approved by SMUD, shall apply and such items shall bear those labels. Where one of the approved electrical testing laboratories has an applicable system listing and label, the entire system, except for medium voltage equipment and components, shall be so labeled.

1.07 CONTINUITY OF EXISTING SERVICES AND SYSTEMS

No outages shall be permitted on existing systems except at the time and during the interval specified by SMUD. Any outage must be scheduled when the interruption causes the least interference with normal institutional schedules and business routines. No extra costs will be paid to the Contractor for such outages which must occur outside of regular weekly working hours.

This Contractor shall restore any circuit interrupted as a result of this work to proper operation as soon as possible. Note that operations are on a seven-day week schedule.

1.08 PROTECTION OF FINISHED SURFACES

Furnish one can of touch-up paint for each different color factory finish furnished by the Contractor. Deliver touch-up paint with other "loose and detachable parts" as covered in the General Requirements.

1.09 APPROVED ELECTRICAL TESTING LABORATORIES

The following laboratories are approved for providing electrical product safety testing and listing services as required in these specifications:

Underwriters Laboratories Inc.
Electrical Testing Laboratories, Inc.

1.10 SEALING AND FIRESTOPPING

Sealing and firestopping of sleeves/openings between conduits, cable trays, wireways, troughs, cablebus, busduct, etc. and the structural or partition opening shall be the responsibility of the contractor whose work penetrates the opening. The contractor

responsible shall hire individuals skilled in such work to do the sealing and firestopping. These individuals hired shall normally and routinely be employed in the sealing and fireproofing occupation.

1.11 SMUD FURNISHED EQUIPMENT

SMUD will be furnishing some equipment that may have to be received, stored, installed, and/or which will need final connections for the completed project. In some cases, it may be appropriate to refer to other sections for a more complete description of the equipment being furnished or the work involved in installation.

1.12 WORK BY SMUD

SMUD will be performing some work necessary for the completed project and the Contractor is to coordinate its work with this work.

PCB equipment (other than light fixture ballasts) removal and disposal, if required, shall be coordinated with SMUD to comply with all governmental requirements.

Electrical testing not described in these contract documents will be under separate contract.

1.13 PROVISIONS FOR FUTURE WORK

Some equipment and raceways to be furnished and installed by electrical contractor shall be supplied with provisions for future expansion. This requirement is shown and discussed on the contract drawings.

1.14 INTENT

The Contractor shall furnish and install all the necessary materials, apparatus, and devices to complete the electrical equipment and systems installation herein specified, except such parts as are specifically exempted herein.

If an item is either called for in the specifications or shown on the plans, it shall be considered sufficient for the inclusion of said item in this contract. If a conflict exists within the Specifications or exists within the Drawings, the Contractor shall furnish the item, system, or workmanship, which is the highest quality, largest, or most closely fits the intent (as determined by the Project Manager). Refer to the General Conditions of the Contract for further clarification.

It must be understood that the details and drawings are diagrammatic. The Contractor shall verify all dimensions at the site and be responsible for their accuracy.

All sizes as given are minimum except as noted.

Materials and labor shall be new (unless noted or stated otherwise), first class, and workmanlike, and shall be subject at all times to SMUDs and/or A/E's inspections, tests and approval from the commencement until the acceptance of the completed work.

Whenever a particular manufacturer's product is named, it is intended to establish a level of quality and performance requirements unless more explicit restrictions are stated to apply.

1.15 OMISSIONS

No later than ten (10) days before bid opening, the Contractor shall call the attention of SMUD to any materials or apparatus the Contractor believes to be inadequate and to any necessary items of work omitted.

1.16 SUBMITTALS

Submit for all equipment and systems as indicated in the respective specification sections, marking each submittal with that specification section number. Mark general

catalog sheets and drawings to indicate specific items being submitted and proper identification of equipment by name and/or number, as indicated in the contract documents. Failure to do this may result in the submittal(s) being returned to the Contractor for correction and resubmission. Failing to follow these instructions does not relieve the Contractor from the requirement of meeting the project schedule.

On request from SMUD, the successful bidder shall furnish additional drawings, illustrations, catalog data, performance characteristics, etc.

Submittals shall be grouped to include complete submittals of related systems, products, and accessories in a single submittal. Mark dimensions and values in units to match those specified. Include wiring diagrams of electrically powered equipment.

The submittals must be approved before fabrication is authorized.

Submit sufficient quantities of submittals to allow the following distribution:

Operating and Maintenance Manuals	2 copies
User agency	2 copies
A/E	1 copy

1.17 PROJECT/SITE CONDITIONS

Install Work in locations shown on Drawings, unless prevented by Project conditions.

Prepare drawings showing proposed rearrangement of Work to meet Project conditions, including changes to Work specified in other Sections. Obtain permission of SMUD before proceeding.

Tools, materials and equipment shall be confined to areas designated by SMUD.

1.18 WORK SEQUENCE AND SCHEDULING

Install work in phases to accommodate SMUD operating requirements. During the construction period coordinate electrical schedule and operations with SMUD.

1.19 WORK BY OTHER TRADES

Every attempt has been made to indicate in this trade's specifications and drawings all work required of this Contractor. However, there may be additional specific paragraphs in other trade specifications and addenda, and additional notes on drawings for other trades which pertain to this Trade's work, and thus those additional requirements are hereby made a part of these specifications and drawings.

Electrical details on drawings for equipment to be provided by others are based on preliminary design data only. This Contractor shall lay out the electrical work and shall be responsible for its correctness to match equipment actually provided by others.

1.20 SALVAGE MATERIALS

No materials removed from this project shall be reused. All materials removed shall become the property of and shall be disposed of by the Contractor.

The following material shall be removed from service and turned over to SMUD, in the same condition as when it was removed. NONE

1.21 CERTIFICATES AND INSPECTIONS

Obtain and pay for all required State installation inspections except those provided by SMUD. Deliver originals of these certificates to the SMUD Representative.

This contractor is responsible for coordination of electrical inspection. Inspection requirements will be issued at a pre-installation meeting, arranged by this contractor and the SMUD Electrical Inspector.

1.22 OPERATION AND MAINTENANCE DATA

All operations and maintenance data shall comply with the submission and content requirements specified under section GENERAL REQUIREMENTS.

In addition to the general content specified under GENERAL REQUIREMENTS supply the following additional documentation:

Manufacturer's wiring diagrams for electrically powered equipment.

1.23 RECORD DRAWINGS

The Contractor shall maintain at least one copy each of the specifications and drawings on the job site at all times.

SMUD will provide the Contractor with a suitable set of contract drawings on which daily records of changes and deviations from contract shall be recorded. Dimensions and elevations on the record drawings shall locate all buried or concealed piping, conduit, or similar items.

The daily record of changes shall be the responsibility of Contractor's field superintendent. No arbitrary mark-ups will be permitted.

At completion of the project, the Contractor shall submit the marked-up record drawings to SMUD prior to final payment.

PART 2 - PRODUCTS

2.1 IDENTIFICATION

See Electrical section 26 05 53 – Identification for Electrical Systems.

2.2 SEALING AND FIRESTOPPING

2.3 FIRE AND/OR SMOKE RATED PENETRATIONS:

Whenever possible, avoid penetrations of fire and smoke rated partitions. When they cannot be avoided, verify that sufficient space is available for the penetration to be effectively fire and smoke stopped.

Manufacturers:
3M, STI/SpecSeal, Tremco, Hilti or approved equal.

All firestopping systems shall be by the same manufacturer.

Submittals:
Contractor shall submit product data for each firestop system. Submittals shall include product characteristics, performance and limitation criteria, test data, MSDS sheets, installation details and procedures for each method of installation applicable to this project. For non-standard conditions where no UL tested system exists, submit manufacturer's drawings for UL system with known performance for which an engineering judgment can be based upon.

Product:
Firestop systems shall be UL listed or tested by an independent testing laboratory approved by the Department of Commerce.

The contractor shall be responsible for selecting the appropriate UL tested firestop system for each application required on the project and will submit this to SMUD for review. Each firestop manufacturer has specific details for different applications they have tested.

Use a product that has a rating not less than the rating of the wall or floor being penetrated. Reference architectural drawings for identification of fire and/or smoke rated walls and floors.

Contractor shall use firestop putty, caulk sealant, intumescent wrapstrips, intumescent firestop collars, firestop mortar or a combination of these products to provide a UL listed system for each application required for this project. Provide mineral wool backing where specified in manufacturer's application detail.

2.4 NON-RATED PENETRATIONS:

Conduit Penetrations Through Below Grade Walls:
In exterior wall openings below grade, use a modular mechanical type seal consisting of interlocking synthetic rubber links shaped to continuously fill the annular space between the uninsulated conduit and the cored opening or a water-stop type wall sleeve.

Conduit and Cable Tray Penetrations:
At conduit and cable tray penetrations of non-rated interior partitions, floors and exterior walls above grade, use urethane caulk in annular space between conduit and sleeve, or the core drilled opening.

PART 3 - EXECUTION

3.1 EXCAVATION AND BACKFILL

Perform all excavation and backfill work to accomplish indicated electrical systems installation..

3.2 CONCRETE WORK

The Division 3 Contractor will perform all cast-in-place concrete unless noted otherwise elsewhere. Provide all layout drawings, anchor bolts, metal shapes, and/or templates required to be cast into concrete or used to form concrete for the support of electrical equipment.

3.3 BUILDING ACCESS

Arrange for the necessary openings in the building to allow for admittance of all apparatus. When the building access was not previously arranged and must be provided by this contractor, restore any opening to its original condition after the apparatus has been brought into the building.

3.4 EQUIPMENT ACCESS

Install all piping, conduit, ductwork, and accessories to permit access to equipment for maintenance. Coordinate the exact location of wall and ceiling access panels and doors with the General Contractor, making sure that access is available for all equipment and specialties.

3.5 COORDINATION

The Contractor shall cooperate with other trades and SMUD's personnel in locating work in a proper manner. Should it be necessary to raise or lower or move longitudinally any part of the electrical work to better fit the general installation, such work shall be done at no extra cost to SMUD, provided such decision is reached prior to actual installation.

The Contractor shall verify that all devices are compatible for the surfaces on which they will be used. This includes, but is not limited to light fixtures, panelboards, devices, etc. and recessed or semi-recessed heating units installed in/on architectural surfaces.

Coordinate all work with other contractors prior to installation. Any installed work that is not coordinated and that interferes with other contractor's work shall be removed or relocated at the installing contractor's expense.

Cooperate with the testing consultant in ensuring specification Section 26 05 04 compliance. Verify system completion to the testing consultant. Demonstrate the starting, interlocking and control features of each system so the testing contractor can perform its work.

3.6 SLEEVES

Pipe sleeves for conduits 6" in diameter and smaller, in new poured concrete construction, shall be schedule 40 steel pipe, plastic removable sleeve or sheet metal sleeve, all cast in place.

In wet area floor penetrations, top of sleeve to be 2 inches above the adjacent floor. In existing wet area floor penetrations, core drill sleeve openings large enough to insert schedule 40 sleeves and grout the area around the sleeve. If a pipe clamp resting on the sleeve supports the pipe penetrating the sleeve, weld a collar or struts to the sleeve that will transfer weight to the existing floor structure. Wet areas for this paragraph are rooms or spaces containing air handling unit coils, converters, pumps, chillers, boilers, and similar waterside equipment.

Pipe penetrations in existing concrete floors that are not in wet areas may omit the use of schedule 40 sleeve and use the core drilled opening as the sleeve.

3.7 SEALING AND FIRESTOPPING

Fire and/or Smoke Penetrations:
Install approved product in accordance with the manufacturer's instructions where a pipe (i.e. cable tray, bus, cable bus, conduit, wireway, trough, etc.) penetrates a fire rated surface.

Where firestop mortar is used to infill large fire-rated floor openings that could be required to support weight, provide permanent structural forming. Firestop mortar alone is not adequate to support any substantial weight.

Non-Rated Surfaces:

When the opening is through a non-fire rated wall, floor, ceiling or roof the opening must be sealed using an approved type of material.

At interior partitions, conduit penetrations are required to be sealed for all tele/data/com rooms and similar spaces where the room pressure or odor transmission must be controlled. Apply sealant to both sides of the penetration in such a manner that the annular space between the conduit sleeve and the conduit is completely filled.

3.8 HOUSEKEEPING AND CLEAN UP

The Contractor shall clean up and remove from the premises, on a daily basis, all debris and rubbish resulting from its work and shall repair all damage to new and existing equipment resulting from its work. When job is complete, this Contractor shall remove all tools, excess material and equipment, etc., from the site.

3.9 AGENCY TRAINING

All training provided for agency shall be subject to compliance with the format, general content requirements and submission guidelines specified by SMUD.

Contractor to provide factory authorized representative and/or field personnel knowledgeable with the operations, maintenance and troubleshooting of the system and/or components defined within this section for a minimum period of two days.

END OF SECTION

26 05 19 - LOW-VOLTAGE ELECTRICAL POWER CONDUCTORS AND CABLE

PART 1 - GENERAL

1.01 SCOPE

The work under this section includes furnishing and installing required wiring and cabling systems including pulling, terminating and splicing. Included are the following topics:

PART 1 - GENERAL
Scope
Related Work
References
Submittals
Project Conditions

PART 2 - PRODUCTS
General
Building Wire
Variable Frequency Drive (VFD) Wire
Underground Wire for Exterior Work
Wiring Connectors

PART 3 - EXECUTION
General Wiring Methods
Wiring Installation In Raceways
Wiring Connections and Terminations
Field Quality Control
Wire Color
Branch Circuits
Emergency Circuits

1.02 RELATED WORK

Section 26 05 53 – Identification for Electrical Systems.

1.03 REFERENCES

NFPA 70 - National Electrical Code.

1.04 SUBMITTALS

Submit product data: Provide for each cable assembly type.

Submit factory test reports: Indicate procedures and values obtained.

Submit shop drawings for modular wiring system including layout of distribution devices, branch circuit conduit and cables, circuiting arrangement, and outlet devices.

Submit manufacturer's installation instructions. Indicate application conditions and limitations of use stipulated by product testing agency specified under Regulatory Requirements.

1.05 PROJECT CONDITIONS

Verify that field measurements are as shown on Drawings.

Conductor sizes are based on copper.
Wire and cable routing shown on Drawings is approximate unless dimensioned. Route wire and cable as required to meet project conditions.

Where wire and cable routing is not shown, and destination only is indicated, determine exact routing and lengths required.

PART 2 - PRODUCTS

2.01 GENERAL

All wire shall be new, delivered to the site in unbroken cartons and shall be less than one year old out of manufacturer's stock.

All conductors shall be copper. If permitted by SMUD, aluminum conductors size #1/0 and larger may be substituted for copper and used for transformer secondary conductors, switchboard feeders, and panelboard feeders.

Aluminum conductors shall not be used for serving individual motors, chillers, VFD's and motor controllers.

The following requirements shall be met when aluminum conductors are used:

Aluminum alloy conductors shall be compact stranded conductors of a recognized Aluminum Association 8000 Series aluminum alloy conductor material (AA-8000 series alloy).

It is the responsibility of the contractor to increase the size of the conduit, wire gutter, or enclosure, if necessary, to accommodate the larger gauge substitutions of aluminum conductors and as required to meet code requirements.

When substitutions are permitted by SMUD, it is the responsibility of the contractor to increase the size of the aluminum conductor to match the ampacity of the copper conductor circuit shown on the Drawings.

The contractor shall submit a feeder schedule to SMUD for all conductor substitutions indicating the aluminum conductor wire size and the conduit size. The contractor shall not begin the installation until written approval is granted by SMUD.

All aluminum conductors shall terminate on a mechanical screw-type connector or mechanical compression-type connector. Connector shall be dual rated (AL7CU or AL9CU) and Listed by UL for use with aluminum and copper conductors, and sized to accept aluminum conductors of the required ampacity. When using compression-type connectors, the lugs shall be marked with wire size, die index, number and location of crimps and shall be suitably color-coded. Using a suitable stripping tool, remove insulation from the required length of the conductor. Wire brush the conductor and apply a Listed joint compound. Tighten or crimp the connection per the connector manufacturer's recommendation. Wipe off any excess joint compound.

When terminating aluminum conductors to aluminum bus, prepare a mechanical screw-type or compression-type connection. Bolts shall be anodized alloy and conform to current ANSI and ASTM chemical and mechanical property limits. Nuts shall be aluminum alloy and conform to current ANSI standards. Washers shall be flat aluminum alloy, Type A plain, standard wide series conforming to current ANSI standards. Lubricate and tighten the hardware per manufacturer's recommendations.

When terminating aluminum conductors to copper bus, prepare a mechanical screw-type or compression-type connection. Bolts shall be plated or galvanized medium carbon steel; heat treated, quenched and tempered equal to current ASTM standard or SAE grade 5. Nuts shall conform to current ANSI standards. Washers shall be steel, Type A plain, standard wide series conforming to current ANSI standards. Belleville conical spring washers shall be of hardened steel, cadmium plated or silicone bronze. Lubricate and tighten the hardware per manufacturer's recommendations.

The final tightening torque shall be recorded for all aluminum conductor mechanical screw-type connections and provided in report form, in the completed O&M manuals.

The contractor shall perform an infrared survey of all aluminum conductor connections after the installation is complete and in normal service. Infrared surveys shall be performed during periods of maximum possible loading with at least 30% of rated load of the equipment being inspected. All connections with elevated temperatures shall be corrected by the contractor. The infrared survey results shall be provided in report form, in the completed O&M manuals.

No copper-to-aluminum transitions permitted when splicing onto existing copper feeders.

Insulation shall have a 600 volt rating.

All conductors shall be stranded.

Stranded conductors may only be terminated with UL OR ETL Listed type terminations or methods: e.g. stranded conductors may not be wrapped around a terminal screw but must be terminated with a crimp type device or must be terminated in an approved back wired method.

2.02 BUILDING WIRE
Description: Single conductor insulated wire.

Insulation: Type THHN/THWN-2, XHHW-2 insulation for feeders and branch circuits with copper conductors.
Type THHN/THWN-2, XHHW-2 insulation for feeders with aluminum conductors.

2.03 VARIABLE FREQUENCY DRIVE (VFD) WIRE
All power wiring from the VFD output to the motor shall be type XHHW-2 insulation, single conductor wire.

2.04 UNDERGROUND WIRE FOR EXTERIOR WORK
Description: Stranded single or multiple conductor insulated wire.

Insulation: Type XHHW-2 or USE.

This wiring shall be used in all underground applications, except when run in a concrete-encased ductbank.

2.05 WIRING CONNECTORS
Split Bolt Connectors: Not acceptable.

Solderless Pressure Connectors: High copper alloy terminal. May be used only for cable termination to equipment terminals. Not approved for splicing.

Twist Type Wire Connectors: Solderless twist type spring connector (wire-nut) with insulating cover for copper wire splices and taps. Use for conductor sizes 10 AWG and smaller. The manufacturer's wire fill capacity must be followed.

All wire connectors used in underground or exterior pull boxes shall be gel filled twist connectors or a connector designed for damp and wet locations. Gel filled twist type connectors can be used for copper conductor sizes 6 AWG and smaller for site lighting applications. The manufacturer's wire fill capacity must be followed.

Mechanical Connectors: Bolted type tin-plated; high conductivity copper alloy; spacer between conductors; beveled cable entrances.

Compression (crimp) Connectors: Long barrel; seamless, tin-plated electrolytic copper tubing; internally beveled barrel ends. Connector shall be clearly marked with the wire size and type and proper number and location of crimps. Connector must be installed with a crimper tool listed for use with the manufacturer and type of compression connector.

Insulation Piercing Connectors: Molded insulated body, copper teeth, wrench tightened, UL 486B Listed. May be used only for connection of a tap conductor (where permitted by SMUD) in run and tap type applications when main conductor is 8 AWG and larger.

PART 3 - EXECUTION

3.01 GENERAL WIRING METHODS
All wire and cable shall be installed in conduit.

Do not use wire smaller than 12 AWG for power and lighting circuits.

All conductors shall be sized to prevent excessive voltage drop at rated circuit ampacity. As a minimum use 10 AWG conductor for 20 ampere, 120 volt branch circuit home runs

longer than 100 feet (30 m), and for 20 ampere, 277 volt branch circuit home runs longer than 200 feet (61 m).

Make conductor lengths for parallel conductors equal.

Splice only in junction or outlet boxes.

No current carrying conductors less than 10 AWG shall be installed in exterior underground conduit.

Identify ALL low voltage, 600v and lower, wire per section 26 05 53.

Neatly train and lace wiring inside boxes, equipment, and panelboards.

3.02 WIRING INSTALLATION IN RACEWAYS

Pull all conductors into a raceway at the same time. Use Listed water or silicone based wire pulling lubricant for pulling 4 AWG and larger wires and for other conditions when necessary. Wax based lubricants are not allowed. Pulling lubricant is not required for low friction type products where the cable manufacturer recommends that cables be pulled without lube.

Install wire in raceway after interior of building has been physically protected from the weather and all mechanical work likely to injure conductors has been completed.

Completely and thoroughly swab raceway system before installing conductors.

Place all conductors of a given circuit (this includes phase wires, neutral (if any), and ground conductor) in the same raceway. If parallel phase and/or neutral wires are used, then place an equal number of phase and neutral conductors in same raceway or cable.

VFD Installations: Install VFD input wiring and output wiring in separate conduit systems. Do not mix VFD input power and output power, or control wiring in a common raceway.

3.03 WIRING CONNECTIONS AND TERMINATIONS

Splice only in accessible junction boxes.

Wire splices and taps, where explicated permitted by SMUD, shall be made firm, and adequate to carry the full current rating of the respective wire without soldering and without perceptible temperature rise.

All splices shall be so made that they have an electrical resistance not in excess of two feet (600 mm) of the conductor.

Use solderless twist type spring connectors (wire nuts) with insulating covers for wire splices and taps, 10 AWG and smaller.

Use mechanical or compression connectors for wire splices and taps, 8 AWG and larger. Tape uninsulated conductors and connectors with electrical tape to 150 percent of the insulation value of conductor.

Thoroughly clean wires before installing lugs and connectors.

At all splices and terminations, leave tails long enough to cut splice out and completely re-splice.

3.04 FIELD QUALITY CONTROL

Field inspection and testing will be performed under provisions of Section 26 05 04.

Additional testing as follows shall be performed if aluminum conductors are used:

Equipment terminated with aluminum conductors shall be tested with a thermal imager and recorded.

Conductors shall be closely checked for loose or poor connections, and for signs of overheating or corrosion.

Test procedures shall meet NETA guidelines.

Test results and report shall be provided to SMUD.

Contractor shall correct all deficiencies reported in the test report.

3.05 WIRE COLOR

General:

Solid colored insulation is required for all THHN/THWN-2 wire. For other wire types use colored wire or identify wire with colored tape at all terminals, splices and boxes. Wire shall be colored as indicated below.

In existing facilities, use existing color scheme.

In new facilities, use black and red for single phase circuits at 120/240 volts, use Phase A black, Phase B red and Phase C blue for circuits at 120/208 volts single or three phase, and use Phase A brown, Phase B orange and Phase C yellow for circuits at 277/480 volts single or three phase. Note: This includes fixture whips except for Listed whips mounted by the fixture manufacturer on the fixture and Listed as a System.

All switch legs shall be the same color as their associated circuit. Traveler conductors run between 3 and 4 way switches shall be colored pink or purple.

Neutral Conductors: White for 120/208V and 120/240V systems, Gray for 277/480V systems. Where there are two or more neutrals in one conduit, each shall be individually identified with a different stripe.

Branch Circuit Conductors: Three or four wire home runs shall have each phase uniquely color coded.

Feeder Circuit Conductors: Each phase shall be uniquely color coded.

Ground Conductors: Green colored insulation for THHN/THWN-2 wire. For other wire types use green colored wire or identify wire with green tape at both ends and at all access points, such as panelboards, motor starters, disconnects and junction boxes. When isolated grounds are required, contractor shall provide green with yellow tracer.

3.06 BRANCH CIRCUITS

The use of single-phase, multi-wire branch circuits with a common neutral is not permitted. All single-phase branch circuits shall be furnished and installed with an individual accompanying neutral, sized the same as the phase conductors.

.

END OF SECTION

SECTION 26 05 26 - GROUNDING AND BONDING FOR ELECTRICAL SYSTEMS

PART 1 - GENERAL

1.01 SCOPE
The work under this section includes grounding electrodes and conductors, equipment grounding conductors, and bonding. Included are the following topics:

PART 1 - GENERAL
Scope
References
Performance Requirements
Submittals
Project Record Documents
Regulatory Requirements

PART 2 - PRODUCTS
Rod Electrode
Mechanical Connectors
Compression Connectors
Exothermic Connections
Wire
Bus

PART 3 - EXECUTION
Examination
General
Medium Voltage System Grounding
Less Than 600 Volt System Grounding
Field Quality Control

1.02 REFERENCES
NFPA 70 - National Electrical Code.
ANSI/IEEE 142 (Latest edition) - Recommended Practice for Grounding of Industrial and Commercial Power Systems.

1.03 PERFORMANCE REQUIREMENTS
Grounding System Resistance: 2ohms maximum at building service entrance.

Testing of grounding system resistance is to be witnessed by the SMUD electrical inspector or Field Representative. Provide test report of grounding system resistance in final O&M manuals.

1.04 SUBMITTALS
Product Data: Provide data for grounding electrodes and connections.

Test Reports: Indicate overall resistance to ground [and resistance of each electrode].

Manufacturer's Instructions: Include instructions for preparation, installation and examination of exothermic connectors.

1.05 PROJECT RECORD DOCUMENTS
Accurately record actual locations of grounding electrodes.

1.06 REGULATORY REQUIREMENTS
Conform to requirements of NFPA 70.

Furnish products listed and classified by Underwriters Laboratories, Inc. or testing firm acceptable to authority having jurisdiction as suitable for purpose specified and shown.

PART 2 - PRODUCTS

2.01 ROD ELECTRODE
Material: Copper-clad steel.

Diameter: 3/4 inch (19 mm) minimum.

Length: 10 feet (3.5 m) minimum. Rod shall be driven at least 9' 6" deep.

2.02 MECHANICAL CONNECTORS
The mechanical connector bodies shall be manufactured from high strength, high conductivity cast copper alloy material. Bolts, nuts, washers and lockwashers shall be made of Silicon Bronze and supplied as a part of the connector body and shall be of the two bolt type.

Split bolt connector types are NOT allowed.

The connectors shall meet or exceed UL 467 and be clearly marked with the catalog number, conductor size and manufacturer.

2.03 COMPRESSION CONNECTORS
The compression connectors shall be manufactured from pure wrought copper. The conductivity of this material shall be no less than 99% by IACS standards.

Each connector shall be factory filled with an oxide-inhibiting compound.

The connectors shall meet or exceed the performance requirements of IEEE 837, latest revision.

The connectors shall be clearly marked with the manufacturer, catalog number, conductor size and the required compression tool settings.

The installation of the connectors shall be made with a compression tool and die system, as recommended by the manufacturer of the connectors.

Pre-crimping of the ground rod is required for all irreversible compression connections to a ground rod.

2.04 EXOTHERMIC CONNECTIONS
As manufactured by Cadweld or similar.

2.05 WIRE
Material: Stranded copper (aluminum not permitted).

Grounding Electrode Conductor: Size as shown on drawings, specifications or as required by NFPA 70, whichever is larger.

Foundation Electrodes: As shown on drawings.

Primary Manhole, Main Switchgear room and Vault Bonding: No. 4/0 minimum.

Feeder and Branch Circuit Equipment Ground: Size as shown on drawings, specifications or as required by NFPA 70, whichever is larger. Differentiate between the normal ground and the isolated ground when both are used on the same facility.

2.06 BUS
Material: Copper (aluminum not permitted).

Size: 1/4" X 2" minimum.

PART 3 - EXECUTION

3.01 EXAMINATION
Verify that final backfill and compaction has been completed before driving rod electrodes.

3.02 GENERAL
Install Products in accordance with manufacturer's instructions.

Mechanical connections shall be accessible for inspection and checking. No insulation shall be installed over mechanical ground connections.

Ground connection surfaces shall be cleaned and all connections shall be made so that it is impossible to move them.

All grounding electrode conductors and individual grounding conductors shall be installed in PVC conduit, in exposed locations.

3.03 MEDIUM VOLTAGE SYSTEM GROUNDING Not applicable to this project

~~Provide and install a ground bus 18" above finished floor with insulated standoffs 36" on center, completely around the perimeter of the room (vault) containing the high voltage switchgear and unit substation. Route bus over door. All connections to bus shall be bolted with Belleville washers and tool applied compression spade lugs (2 hole) or Exothermic.~~

~~voltage switchgear room or as indicated by the drawings, whichever is greater. Connect to ground bus with 4/0 copper conductor. Connection from ground rod to conductor shall be exothermic or irreversible compression. Pre-crimping of the ground rod is required for all irreversible compression connections. Connection from ground bus to conductor shall be Exothermic or bolted with Belleville washers and tool applied compression spade lugs (2 hole).~~

~~Provide separate 4/0 copper conductor from ground bus to:~~
~~XO terminal of each transformer.~~
~~Each high voltage switch ground bus.~~
~~Secondary service equipment ground bus.~~
~~Transformer high voltage grounded terminal (if required).~~

~~Provide full size 600V copper THHN/THWN or XHHW-2 grounding conductor in each conduit, raceway or enclosure which contains high voltage conductors. Terminate at ground bus of equipment containing high voltage terminations. Connect to ground rod and grounding conductor in manhole.~~

~~etc.) to room ground bus with 4/0 copper conductor.~~

~~Bond all conduits containing high voltage conductors or secondary service conductors to penetrated enclosures using grounding bushing and #4 copper conductor. Attach to penetrated enclosures using grounding bushing and #4 copper conductor. Attach to penetrated enclosure using compression lug on stud or bolt and Belleville washers.~~

~~bushing and separate #4 copper grounding conductor to ground bus.~~

~~Provide #10 stranded wire from each termination shield drain wire to ground bus within enclosure. Connect to nearest grounded conductor if ground bus is not within 24". Route shield drains away from energized parts. Make connections with "Sta-Kon" type terminals or tool applied tap connectors. Use of split bolts is acceptable when braided drain wires are used.~~

~~Provide ground rod in each section of each secondary switchboard. Make Exothermic or UL Listed Mechanical connection between 4/0 copper to ground rod and to switchgear ground bus.~~

3.04 LESS THAN 600 VOLT SYSTEM GROUNDING

Supplementary Grounding Electrode: Use driven ground rod as illustrated on drawings.

Provide code sized copper grounding electrode conductor from secondary switchboard ground bus, each separately derived system neutral, secondary service system neutral to street side of water meter, building steel, ground rod, and any concrete encased electrodes.

Bond together system neutrals, service equipment enclosures, exposed non-current carrying metal parts of electrical equipment, metal raceway systems, grounding conductor in raceways and cables, receptacle ground connectors, and plumbing systems.

Bond together each metallic raceway, pipe, duct and other metal object entering space under access floors. Bond to underfloor ground grid. Use #2 AWG bare copper conductor.

Equipment Grounding Conductor: Provide separate, insulated equipment grounding conductor within each raceway. Terminate each end on suitable lug, bus, enclosure or bushing. Provide a ground wire from each device to the respective enclosure.

Telecommunications and Audio Visual systems: Not applicable to this project.
~~Shall be installed with an isolated grounding system which has only one ground point. That ground point is to be the common grounding electrode system at the electrical service entrance for the building. Contractor is to provide an isolated grounding conductor from the electrical service entrance of the building to each Telecommunications Grounding Bus Bar (TGBB) in each Telecommunication Room. Use a minimum No. 2/0 AWG copper conductor, or as indicated on the plans, for the telecommunications service grounding conductor. Leave 10 feet slack grounding conductor at each Telecommunications Room. The grounding conductor MUST NOT be attached to building steel (except as allowed at the main electrical service entrance).~~

~~Telecommunications Equipment Rack Grounding: Use a #6 or larger AWG copper conductor from all telecommunications cabinets and racks to the Telecommunications Grounding Bus Bar (TGBB) in each Telecommunication Room.~~

3.05 FIELD QUALITY CONTROL

Inspect grounding and bonding system conductors and connections for tightness and proper installation.

END OF SECTION

SECTION 26 05 29 - HANGERS AND SUPPORTS FOR ELECTRICAL SYSTEMS

PART 1 - GENERAL

1.01 SCOPE

The work under this sections includes conduit and equipment supports, straps, clamps, steel channel, etc, and fastening hardware for supporting electrical work. Included are the following topics:

PART 1 - GENERAL
Scope
Related Work
Submittals
Quality Assurance

PART 2 - PRODUCTS
Material

PART 3 - EXECUTION
Installation

1.02 SUBMITTALS

Product Data: Provide data for support channel.

1.03 QUALITY ASSURANCE

Support systems shall be adequate for weight of equipment and conduit, including wiring, which they carry.

PART 2 - PRODUCTS

2.01 MATERIAL

Support Channel: Steel, Galvanized, Enameled or other corrosion resistant.

Hardware: Corrosion resistant.

Minimum sized threaded rod for supports shall be 3/8” for trapezes and single conduits 1-1/4” and larger, and ¼” for single conduits 1” and smaller.

Conduit clamps, straps, supports, etc., shall be steel or malleable iron. One-hole straps shall be heavy duty type. All straps shall have steel or malleable backing plates when rigid steel conduit is installed on the interior or exterior surface of any exterior building wall.

PART 3 - EXECUTION

3.01 INSTALLATION

Fasten hanger rods, conduit clamps, outlet, junction and pull boxes to building structure using pre-cast insert system, preset inserts, beam clamps, expansion anchors, or spring steel clips (interior metal stud walls only).

Use toggle bolts or hollow wall fasteners in hollow masonry, plaster, or gypsum board partitions and walls; expansion anchors or preset inserts in solid masonry walls; self-drilling anchors or expansion anchors on concrete surfaces; sheet metal screws in sheet metal studs and wood screws in wood construction. If nail-in anchors are used, they must be removable type anchors.

Power-actuated fasteners and plastic wall anchors are not permitted.

File and de-bur cut ends of support channel and spray paint with cold galvanized paint to prevent rusting.

Do not fasten supports to piping, ductwork, mechanical equipment, cable tray or conduit. Do not fasten to suspended ceiling grid system.

Do not drill structural steel members unless approved by SMUD.

Fabricate supports from galvanized structural steel or steel channel, rigidly welded or bolted to present a neat appearance. Use hexagon head bolts with spring lock washers under all nuts.

In wet locations, mechanical rooms and electrical rooms install free-standing electrical equipment on concrete pads as illustrated on drawings.

Install surface-mounted cabinets and panelboards with minimum of four anchors. Provide steel channel supports to stand cabinet one inch (25 mm) off wall (7/8" Uni-strut or ¾" painted, fire-retardant plywood is acceptable).

Bridge studs top and bottom with channels to support flush-mounted cabinets and panelboards in stud walls.

Furnish and install all supports as required to fasten all electrical components required for the project, including free standing supports required for those items remotely mounted from the building structure, catwalks, walkways etc.

END OF SECTION

SECTION 26 05 36 - CABLE TRAYS FOR ELECTRICAL SYSTEMS

PART 1 - GENERAL

1.01 SCOPE

The work under this section includes furnishing of all labor, material, supports and services to install a complete cable tray system as shown and or indicated on the drawings. The cable tray system is defined to include, but not limited to, straight sections of cable tray, bends, tees, elbows, drop-outs, supports and all other related accessories necessary for a complete installation. Included are the following topics:

PART 1 - GENERAL
- Scope
- Related Work
- References
- Submittals

PART 2 - PRODUCTS
- Ladder-Type Cable Tray

PART 3 - EXECUTION
- Installation

1.02 REFERENCES

ANSI/NFPA 70 - National Electrical Code.
ASTM A 123 - Specification for Zinc (Hot-Galvanized) Coatings on Products Fabricated from Rolled, Pressed, and Forged Steel Shapes, Plates, Bars, and Strip.
ASTM A 525 - General Requirements for Steel Sheet, Zinc-Coated Galvanized by the Hot-Dip Process.
ASTM A 607 -- Specification for Steel Sheet and Strip, Hot-rolled and Cold-Rolled, High Strength, Low-Alloy Columbium and/or Vanadium
ASTM B 633 -- Specification for Electro-deposited Coatings of Zinc on Iron and Steel
NEMA VE 1 - Metallic Cable Tray Systems.

1.03 SUBMITTALS

Shop Drawings: Indicate tray type, dimensions, support points, and finishes.

Product Data: Provide data for fittings and accessories. Provide data for fire stopping materials.

Manufacturer's Instructions: Indicate application conditions and limitations of use stipulated by Product testing agency specified under Regulatory Requirements. Include instructions for storage, handling, protection, examination, preparation, and installation of Product.

PART 2 - PRODUCTS

2.01 LADDER-TYPE CABLE TRAY

Description: NEMA VE 1, ladder type tray.

Material: Galvanized Steel

Finish (steel tray only): ASTM A 123, hot dipped galvanized after fabrication

Inside Width: As indicated

Inside Depth: As indicated. Inside depth shall be measured from the top of rail to the top of rung.

Straight Section Rung Spacing: 6 inches on center.

Inside Radius of Fittings: As indicated.

Provide manufacturer's standard clamps, hangers, brackets, splice plates, reducer plates, blind ends, barrier strips, connectors, and grounding straps.

Covers: Not required within utility trench locations.

PART 3 - EXECUTION

3.01 INSTALLATION

Install in accordance with manufacturer's instructions.

Install metallic cable tray in accordance with NEMA VE 1.

No conduit shall be attached to the cable tray except for the conduits that terminate at the cable tray. Cable tray supports only, can be used to support conduit. Do not use more than 1/2 of the cable tray support for conduit support.

Provide supports at each connection point, at the end of each run, and at other points to maintain spacing between supports of 8 ft (2.5 m) maximum.

Supports shall be constructed from formed shape channel members 1 5/8" x 1 5/8", pre-galvanized and 14 Ga. steel complete with nuts, bolts, washers, lock washers and tray clamps as required for a complete and finished installation.

All of the threaded rod used for the tray support shall be 3/8" diameter for 12" wide tray and 1/2" minimum for tray larger than 12" wide.

Bolts and nuts shall be installed in all holes of the cable tray splice plates per the manufacturers instructions for installation.

Tray shall be installed in a configuration as shown on the plans, outlined in the spec and approved by SMUD. Center support is allowed on 12” wide and less cable tray.

Submit a complete detailed sketch for approval of the actual proposed method of installation.

The maximum allowable deviation of the tray, from the level horizontal plane measured across the width of the tray, is one half of one inch (1/2"), with the tray loaded to capacity, as allowed by the NEC.

The approval of the installation method does not relieve this contractor from meeting the above deviation requirement. If additional support is needed, as determined by SMUD, this contractor shall furnish and install the additional support at no additional cost to the State.

Use manufactured expansion fittings where required at the building expansion joints and as required by the manufacturer.

Nuts, bolts, washers, rod, etc. shall be plated.

Ground and bond cable tray
Provide continuity between tray components.

Use anti-oxidant compound to prepare aluminum contact surfaces before assembly if required by the manufacturer.

Provide bare stranded copper equipment grounding conductor through entire length of tray. Bond equipment ground conductor to each component, each tray section, and connect to the main building equipment grounding conductor.

Equipment grounding conductor connections to the tray shall be made using a U.L. listed mechanical connection. Sheet metal or TEK screws shall not be used for grounding. Split bolts may be used for connection to wire-basket type trays.

All single and multi-conductor cables shall be fastened to the tray at intervals not to exceed four feet (4').

Conduit connections to the tray shall be made with an U.L. approved clamp, manufactured specifically for the purpose.

Do Not install cable tray below re-heat coils, traps, etc. In those areas that have no option furnish and install a manufacturer approved cover extending 12" on either side.

Where cable tray is to penetrate a fire rated wall or floor, the following installation method shall be used by this contractor:

- Stop the tray at the penetration and fasten the tray end to the wall/floor.
- For every 6" of tray width , furnish and install a 4" rigid galvanized nipple, threaded at both ends, through the penetration extending 4" beyond both sides and supported per section 26 05 29.
- Provide a fiber or plastic bushing on one end and ground bushing on other.
- Bond each grounding bushing to the equipment grounding conductor with a minimum # 4 stranded copper wire using an u.l. listed connector.
- Completely seal around the conduits with an u.l. listed fire rated assembly appropriate for penetration.
- Completely seal the conduits that have conductors and cables passing through, with a u.l. approved fire rated sealant.
- Close off the unused conduits with a 14 ga. Steel penny held in place by the above required bushings.
- The contractor can run cable tray through fire rated wall or floor provided opening is sealed with fire putty and/or pillows according to manufacturers recommendations. The entire assembly must be ul approved and meet fire code requirement.

END OF SECTION

SECTION 26 05 39 - UNDERFLOOR RACEWAYS FOR ELECTRICAL SYSTEMS

PART 1 - GENERAL

1.01 SCOPE

The work under this section includes underfloor ducts, trench ducts, service fittings, and all associated parts. Included are the following topics:

PART 1 - GENERAL
- Scope
- Submittals
- Project Record Documents
- Extra Materials

PART 2 - PRODUCTS
- Trench Duct

PART 3 - EXECUTION
- Installation
- Cleaning
- Protection
- Base

1.02 SUBMITTALS

Submit product data and catalog sheets for all components of the underfloor duct system.

1.03 PROJECT RECORD DOCUMENTS

Record actual locations of ducts, service fittings, junction boxes, and branch circuiting arrangements on the Record Drawings.

1.04 EXTRA MATERIALS

Provide ten afterset inserts.

Provide 10 percent (minimum of 1) of each service fitting type.

Provide two of each special tool required to locate preset inserts.

Provide two of each special tool required to install afterset inserts.

PART 2 - PRODUCTS

2.01 TRENCH DUCT

Description: Closed bottom, concrete trench duct with corrosion resistant finish of metal hardware.

Size: As per drawings._

Supports: Adjustable before concrete placement.

Coverplates: Size and type as per drawings.

Fittings and Accessories: Manufacturer's standard.

PART 3 - EXECUTION

3.01 INSTALLATION

Install products in accordance with manufacturer's instructions.

Locate duct in structural slab.

Provide expansion fittings with suitable bonding jumper where duct crosses building expansion joints.

Level cover plates flush with finished concrete floor.

Place rectangular plates square with wall lines.

Securely hold junction boxes and ducts in place during installation to avoid floating or other movement.

Close unused duct or conduit entrances to junction boxes. Seal duct terminations at junction boxes.

Ground and bond duct under provisions of Section 26 05 26.

Install surface service fittings after installation of floor finishes. Cut floors as necessary, following duct manufacturer's recommendations. Replace damaged floor construction and finish.

Install trench duct trim flush with coverplates; maintain covering of factory-applied tape for protection.

Clean ducts and fittings of debris and dust before installing wire and cable.

Pull wire and cable from outlet insert toward junction boxes.

Install branch circuit conductors continuous between junction box and farthest fitting.

3.02 CLEANING
Clean finished surfaces in accordance with manufacturer's instructions.

3.03 PROTECTION
Protect boxes, covers, and rings from distortion and finish damage.

Replace boxes, covers, and rings marred during construction.

3.04 BASE
Provide suitable base for the supports to prevent sagging of the duct during the pouring of the concrete.

END OF SECTION

SECTION 26 05 43 - UNDERGROUND DUCTS AND RACEWAYS FOR ELECTRICAL SYSTEMS

PART 1 - GENERAL

1.01 SCOPE

The work under this section includes underground cast-in-place concrete ductbanks for electrical power and signal distribution. Included are the following topics:

PART 1 - GENERAL
- Scope
- Related Work
- Submittals

PART 2 - PRODUCTS
- Conduit
- Elbows
- Spacers
- Conduit Terminations in Manholes and Buildings
- Plugs
- Pull Tape
- Grounding
- Drainage Assembly
- Concrete Encasement

PART 3 - EXECUTION
- Excavations
- Placement of Conduit
- Placement of Concrete
- Backfill
- Accessory Installation

1.02 RELATED WORK

Applicable provisions of Division 1 govern work under this Section.

1.03 SUBMITTALS

Indicate material specifications, and provide product data on conduit, spacers, terminators, reinforcing steel and related components.

PART 2 - PRODUCTS

2.01 CONDUIT

Size~~: 5" nominal for voltages above 600V,~~ As specified on drawings for 600Vor lower and communication.

Material: Rigid polyvinyl chloride (PVC) marked at uniform intervals to indicate the kind of material; type Schedule 40 heavy wall, type EB-20 (TC-6), or type EB-35 (TC-8). Type EB PVC conduit is designed for use only in concrete encased installation.

2.02 ELBOWS

Material to match conduit; minimum bend radius of 36 inches (915 mm).

2.03 SPACERS

Plastic, to maintain 3" minimum between conduits or as per shown on drawings.

2.04 CONDUIT TERMINATION IN MANHOLES AND BUILDINGS

A. Bell Ends:

Manufactured bell ends of appropriate sizes at each end of conduit. When entering a new building or a new manhole a pre-manufactured PVC bell end system (as manufactured by Formex or similar) with conduit seals, provisions for roughing into the concrete and water stops is allowed.

B. Bushings:

Steel grounding bushings shall be used on all metal conduit entering a building or manhole.

C. Seals:
When entering an existing building or manhole below grade, the concrete shall be core drilled for the appropriate size conduit and seal. The seal shall be a mechanical interlocking assembly of modular rubber links properly sized to fit the pipe and tightened in place, in accordance with the manufacturer's instruction.

2.05 PLUGS
Closure plugs or caps of same material as conduit on empty conduits at building entrances and at terminations in equipment pedestals to prevent the entrance of moisture and gases.

2.06 PULL TAPE
Polyester pull tape, ½" width, tensile strength of 1,250 lbs. and sequential footage markings along the entire length of the tape as manufactured by Greenlee, Carlon, Garvin Industries, or Neptco (Muletape). Install pull tape in each empty duct.

2.07 GROUNDING
Steel grounding bushings shall be grounded to manhole or junction box ground.

2.08 DRAINAGE ASSEMBLY
All ducts shall drain to an open end - preferably a manhole.

2.09 CONCRETE ENCASEMENT
Concrete used throughout shall be ready mixed concrete furnished by an approved mixing plant. The plant shall comply with the requirements of National Ready Mixed Concrete Association certification plan.

The concrete mix used with type Schedule 40 heavy wall conduit shall be 3000 psi minimum, 3/4" aggregate, 5" to 6" slump.

The concrete mix used with type EB-20 (TC-6), or type EB-35 (TC-8) thin wall conduit shall be 2500 psi minimum, 3/8" aggregate, 7" to 8" slump.

The slump should be just enough to allow the mix to flow to the bottom of the formation and yet not be so wet as to cause the ducts to float.

Encase duct with 3 in. minimum of concrete on top, bottom, and sides with top of duct bank troweled to a crown to prevent pooling of water.

PART 3 - EXECUTION

3.01 EXCAVATIONS
Excavate trenches for ductbank to adequate width, depth, and proper slope as specified.

Install forms on sides of ductbank if trench is not of proper firmness to prevent cave-in.

The trench sidewall shall be less than 6 inches from the edge of the conduit being installed. Install forms if needed to limit the trench width.

Bottom of trench shall be undisturbed earth. If trench bottom is too low for proper grade, fill to proper level with sand and mechanically compact it.

Each excavated section from manhole to manhole and from manhole to building shall be completely excavated and graded before any duct is laid in that section.

3.02 PLACEMENT OF CONDUIT

Within five (5) feet of each building wall or manhole wall penetration, install heavy wall galvanized steel conduit within the concrete envelope to provide protection against vertical shearing. This requirement is waived if the reinforcing steel in the ductbank is poured or doweled into the wall to provide protection against vertical shearing.

When entering an existing building or manhole, core drill existing walls and waterproof using a mechanical seal of assembled rubber links properly sized for the pipe and tighten in place, in accordance with the manufacturer's instruction, after the new conduit is installed.

Install flush bell ends on duct at manholes and buildings. When entering a new building or a new manhole, a pre-manufacture end bell system (by Formex or similar) with conduit seals is allowed.

Install spacers as recommended by conduit manufacturer and requirements stated above, but not to exceed a maximum of 6 ft-0 in. on center for PVC conduit and 8 ft-0 in. on center for steel conduit. Bottom spacers shall rest on 8" X 16" X 2" minimum concrete pads to prevent them from sinking into the ground and reducing the bottom concrete cover. Stagger conduit joints in concrete encasement 6 in. minimum horizontally.

Pitch conduit properly for drainage to manhole or pull box and to prevent low pockets or irregular dips between conduit ends. Minimum pitch to be 4 in. per 100 ft.

Install not more than one 90 degree bend or equivalent between manholes for primary conduit and two 90 degree bends or equivalent for signal conduit.

In ductbanks with both primary and signal conduit, primary conduit shall be straight and the signal conduit shall contain bends as necessary to accommodate the primary duct.

Install insulated grounding bushings on steel duct ends.

Install pull tape with measurement markings in each empty duct.

Install closure plugs or caps on empty conduits at building entrances and at terminations in equipment pedestals to prevent the entrance of moisture and gases.

3.03 PLACEMENT OF CONCRETE

After ducts are in place and before the concrete is poured, the installation shall be inspected by the DSF Construction Representative. Notify the Construction Representative at least two days before the time of inspection.

The Contractor shall supervise the placement of concrete in the ductbank.

Complete entire section of conduit from manhole to manhole or from manhole to building before encasement by concrete.

Top of concrete envelopes shall be not less than 24 inches below grade.

In placing concrete around the conduit, adjust delivery chute so the fall of the concrete into the trench is minimal.

Provide minimum of 3" (76 mm) of concrete cover over conduit at the top, bottom and sides of the duct bank. Provide troweled crowned top on the concrete to prevent water accumulation.

Place concrete continuously from manhole to manhole to building without interruption.

Extend concrete envelope to finish floor grade or interior wall surface in buildings and finish pad grade at equipment. Maintain moisture seal.

3.04 BACKFILL

Install detectable underground warning tape 12" below finish grade over all ductbanks. Tape shall be 2" wide minimum, 5 mil thickness, and contain a foil core. Tape color shall be red and labeled with the words "CAUTION-BURIED ELECTRIC LINE BELOW" as manufactured by Presco or similar.

A. Compact backfill around ductbank.

After completion of ductbank installation, return all ground and pavement surfaces to original condition or to condition as indicated on the drawings. This includes all sidewalks, curbs, streets, parking areas, lawns, shrubs, etc.

3.05 ACCESSORY INSTALLATION

Pull a mandrel/swab (diameter 1/4 in. smaller than conduit) through each conduit in completed ductbank to insure adequate opening of duct run.

Install pull tape in each empty duct.

Install closure plugs or caps on empty conduits at building entrances and at terminations in equipment pedestals to prevent the entrance of moisture and gases.

Ground all steel bushings to manhole or junction box ground.

END OF SECTION

SECTION 26 05 53 - IDENTIFICATION FOR ELECTRICAL SYSTEMS

PART 1 - GENERAL

1.01 SCOPE

The work under this section includes the products and execution requirements relating to labeling of power, lighting, general wiring, signal, fire alarm, and telecommunications wire and cabling. Further, this section includes labeling of all terminations and related sub-systems, including but not limited to nameplates, stenciling, wire and cable marker labeling of all backbone fiber optic (inter-building, tie & riser) cables, terminating equipment and labeling of inner duct (fiber optic). Included are the following topics:

PART 1 - GENERAL
- Scope
- Related Work
- Submittals

PART 2 - PRODUCTS
- Materials

PART 3 - EXECUTION
- General
- Junction and Pullbox Identification
- Power and Control Wire Identification
- Nameplate Engraving
- Panelboard Directories

1.02 RELATED WORK

Section 26 05 19 – Low-Voltage Electrical Power Conductors and Cables

1.03 SUBMITTALS

Include schedule for nameplates and stenciling.

Prior to installation, the Contractor shall provide samples of all label types planned for the project. These samples shall include examples of the lettering to be used.

PART 2 - PRODUCTS

2.01 MATERIALS

Labels: All labels shall be permanent, and machine generated. NO HANDWRITTEN OR NON-PERMANENT LABELS ARE ALLOWED. Exception: back side of device plates and junction boxes may use handwritten, legible labeling on box covers, unless specifically prohibited by other specification sections.

Cable label size shall be appropriate for the conductor or cable size(s), outlet faceplate layout and patch panel design. All labels shall be self-laminating, white/transparent vinyl and be wrapped around the cable or sheath. Labels for power conductors (600V and lower) shall be cloth-type. Flag type labels are not allowed. The labels shall be of adequate size to accommodate the circumference of the cable being labeled and properly self-laminate over the full extent of the printed area of the label.

Nameplates: Engraved three-layer laminated plastic, black letters on a white background. Emergency system (level 1 and level 2) shall use white letters on red background.

Tape (phase identification only): Scotch #35 tape in appropriate colors for system voltage and phase.

Adhesive type labels not permitted except for phase and wire identification. Machine generated adhesive labels shall be permitted for device plates, 4-11/16” and smaller junction boxes, Fire alarm and control devices.

PART 3 - EXECUTION

3.01 GENERAL

Where mixed voltages are used in one building (e.g. 4160 volt, 480 volt, 208 volt) each switch, switchboard, junction box, equipment, etc., on each system must be labeled for voltage in addition to other requirements listed herein.

All branch circuit and power panels must be identified with the same symbol used in circuit directory in main distribution center.

Clean all surfaces before attaching labels with the label manufacturer's recommended cleaning agent.

Install all labels firmly as recommended by the label manufacturer.

Labels shall be installed plumb and neatly on all equipment.

Install nameplates parallel to equipment lines.

Secure nameplates to equipment fronts using screws, rivets or manufacturer approved adhesive or cement.

Embossed tape will not be permitted for any application.

3.02 JUNCTION AND PULLBOX IDENTIFICATION

The following junction and pullboxes shall be identified utilizing spray painted covers:

System	Color(s)
Secondary Power – 480Y/277V	Brown
Secondary Power – 208Y/120V, 240/120V	White
Emergency Power – 480Y/277V	Brown/Red
Emergency Power – 208Y/120V	White/Red
Fire Alarm	Red
Temperature Control	Green
Door Control and Door Monitoring System	Orange
Sound and Intercom Systems	Blue
Video Surveillance System/MATV	Yellow

Provide circuit numbers, and source panel designations for power wiring. Other system shall be identified as shown on details or approved shop drawings. Temperature control shall identify the source.

3.03 POWER AND CONTROL WIRE IDENTIFICATION

Provide wire markers on each conductor in panelboard gutters, pull boxes, outlet and junction boxes, and at load connection. Identify with branch circuit or feeder number for power and lighting circuits, and with control wire number as indicated on schematic and interconnection diagrams or equipment manufacturer's shop drawings for control wiring.

All wiring shall be labeled within 2 to 4 inches of terminations. Each end of a wire or cable shall be labeled as soon as it is terminated including wiring used for temporary purposes.

3.04 WIRING DEVICE IDENTIFICATION

Wall switches, receptacles, occupancy sensors, wall dimmers, device plates and box covers, poke-through fittings, access floor boxes, photocells and time clocks shall be identified with circuit numbers and source. In exposed areas, identifications should be made inside of device covers, unless directed otherwise. Use machine-generated labels, or neatly hand-written permanent marker.

3.05 NAMEPLATE ENGRAVING

Provide nameplates of minimum letter height as scheduled below.

Panelboards, Switchboards and Motor Control Centers: 1 inch (25 mm); identify equipment designation. 1/2 inch (13 mm); identify voltage rating, source and room location of the source.

Equipment Enclosures: 1 inch (25 mm); identify equipment designation.

Circuit Breakers, Switches, and Motor Starters in Panelboards or Switchboards or Motor Control Centers: 1/2 inch (13 mm); identify circuit and load served, including location.

Individual Circuit Breakers, Disconnect Switches, Enclosed Switches, and Motor Starters: ½ inch (13 mm); identify source and load served.

Transformers: 1 inch (25 mm); identify equipment designation. 1/2 inch (13 mm); identify primary and secondary voltages, primary source, and secondary load and location.

Junction boxes: 1 inch (25 mm); identify system source(s) and load(s) served. Junction boxes may be neatly identified using a permanent marker.

3.06 PANELBOARD DIRECTORIES

Typed directories for panels must be covered with clear plastic, have a metal frame. Room number on directories shall be SMUD's not Plan numbers unless SMUD so specifies.

END OF SECTION

SMUD 300KW MICROGRID PROJECT

ELECTRICAL EQUIPMENT SPECIFICATIONS

This package contains project specifications and drawings for specifying four major electrical equipment items that are to be purchased for the SMUD 300kW Microgrid Project by the electrical contractor.

These items are:

Item No.	Name	Description	
1	Central Utility Plant Main Service Switchboard Extension	3000 Ampere, 480/277V, 3-Phase, 4-Wire, Free Standing Indoor NEMA 1 Switchboard, Two Section	
2	Microgrid Switchboard (MSB)	1200 Ampere, 480/277V, 3 Phase, 4-Wire, Free Standing, Indoor NEMA 1 Switchboard, Two Section	
3	Microgrid Motor Control Center	600 Ampere, 480V, 3-Wire, Free Standing Indoor NEMA 1 Back-to Back One Section MCC with Expansion Capacity	
4	Generator Switchboard (GSB)	800 Ampere, 480/277V, 3-Phase, 4-Wire, Free Standing Outdoor NEMA 3R MCC, Four Section	

Drawing included with this package is Central Plant Main Service, Single Line Diagram, Sheet No. E-1.S. This drawing is for purposes of specifying the electrical equipment items only. Drawings E-2.2 and E-2.3 included as part of the construction design package show the elevation views of the electrical equipment items of the specifications.

ITEM 1 - CENTRAL UTILITY PLANT MAIN SERVICE SWITCHBOARD EXTENSION

PART 1 GENERAL

1.01 SECTION INCLUDES

A. Provide low voltage, front-accessible and front/side-accessible switchboards with circuit breaker mains and circuit breaker feeders as specified below and as shown on the contract drawings. See drawing E-1.S for Single Line Diagram, Electrical Specification Item #1, for detailed requirements.

1.02 RELATED SECTIONS

A. Not Applicable – No related sections

1.03 REFERENCES

A. As applicable to the specifics of the project drawings and the specifics of the equipment design for this project, the low voltage switchboards, installed protective devices and other factory installed components in this specification shall be designed and manufactured according to latest revision of the following standards (unless otherwise noted on the project drawings or annotated in any sections below).

1. ANSI/NEMA PB 2, Deadfront Distribution Switchboards

2. ANSI/NEMA PB 2.1, General Instructions for Proper Handling, Installation, Operation, and Maintenance of Deadfront Distribution Switchboards Rated 600 Volts or Less

3. NEMA AB 1, Molded Case Circuit Breakers and Molded Case Switches

4. NFPA 70, National Electrical Code

5. UL 489, Molded Case Circuit Breakers and Circuit Breaker Enclosures

6. UL 891, Dead Front Switchboards

7. CSA C22.2 No. 29-M1989, Panelboards and Enclosed Panelboards

8. CSA-C22.2 No. 4-M89, Enclosed Switches

9. CSA-C22.2 No. 5.1-M91, Molded Case Circuit Breakers

B. When shown on the project drawings or noted in the specification sections below, the Transient Voltage Surge Suppression (TVSS) units shall be designed and manufactured according to latest revision of the following standards (unless otherwise noted on the project drawings or annotated in any sections below).

1. ANSI/IEEE C62.41.1-2002, Guide on the Surge Environment in Low Voltage AC Power Circuits

2. ANSI/IEEE C62.41.2-2002, Recommended Practice on Characterization of Surges in Low Voltage AC Power Circuits

3. ANSI/IEEE C62.45-2002, Recommended Practice on Surge Testing for Equipment Connected to Low Voltage AC Power Circuits

4. NEMA LS-1 (1992), Low Voltage Surge Protective Devices

5. NFPA 70 National Electrical Code – Article 285

6. UL 1283, Electromagnetic Interference Filters

7. UL 1449, Second Edition - Transient Voltage Surge Suppressors

1.04 DEFINITIONS

A. Overcurrent Protective Device = a circuit breaker pole. Example: a 2-pole device is considered 2 protective devices.

B. Short Circuit Rating = shall be the interrupting rating of lowest rated device in the switchboard or applicable UL series rating for proper main and branch device combinations.

C. Protective Devices = Molded case circuit breakers.

D. Front-Accessible Only = As defined by the UL 891 standard which requires that all line and load connections for phase, neutral, and ground conductors can be made and maintained from the front of the switchboard without access to the rear.

1.05 SUBMITTALS

A. The contractor/installer shall provide 5 paper copies of the following documents as APPROVAL drawings to the engineer/owner for review and evaluation. It is preferred that the drawings be provided on size “A” (8.5” x 11”) or size “B” (11” x 17”) paper to facilitate easy copying. The equipment manufacturer shall provide the factory drawings, factory diagrams, factory bill of material and product data sheets for factory installed components. Manufacturing of the equipment will not begin until the submitted documents are stamped “approved” or “approved as noted” by the engineer/owner and officially released for manufacturer by the contractor/installer/distributor/owner.

B. APPROVAL documents for the specified product shall include:

1. Equipment Front View – by the equipment manufacturer

2. Equipment Plan View, which includes Available Conduit Area – by the equipment manufacturer

3. Equipment Bussing or One Line Diagrams – by the equipment manufacturer

4. Component Level Bill of Material – by the equipment manufacturer

5. Component Elementary Diagrams – by the equipment manufacturer

6. Equipment Brochure, detailing the general construction of the product – by the equipment manufacturer

7. Product Data Sheets for major factory installed components – by the equipment manufacturer

C. The contractor/installer shall provide 5 paper copies of the following documents to reflect the AS BUILT condition of the equipment to the engineer/owner for their record documentation. It is preferred that the drawings be provided on size “A” (8.5” x 11”) or size “B” (11” x 17”) paper to facilitate easy copying. The equipment manufacturer shall provide the factory drawings, factory diagrams, factory bill of material and product data sheets for factory installed components.

D. AS BUILT documents for the specified product shall include:

1. Equipment Front View – by the equipment manufacturer

2. Equipment Plan View, which includes Available Conduit Area – by the equipment manufacturer

3. Equipment Bussing or One Line Diagrams – by the equipment manufacturer

4. Component Level Bill of Material – by the equipment manufacturer

5. Component Elementary Diagrams – by the equipment manufacturer

6. Equipment Operation and Maintenance Manual – by the equipment manufacturer

7. Users Guide for major factory installed components – by the equipment manufacturer

1.06 QUALITY ASSURANCE (QUALIFICATIONS)

A. The manufacturer shall have specialized in the manufacture and assembly of low voltage switchboards for at least 25 years.

B. The low voltage switchboards shall be listed and/or classified by Underwriters Laboratories in accordance with the standards listed in the “REFERENCES” section of this specification above.

C. Equipment shall be qualified for use in seismic areas as follows:

1. High seismic loading as defined in IEEE Std 693-1997, with 1.33 amplification factor.

2. IBC-2003, Sds = 1.05g, Ss = 158%, Ip = 1.5, for all z/h greater than 0 and Sds = 1.67g, Ss = 250%, Ip = 1.5, for z/h equal to 0 in accordance with ICC-ES-AC156.

3. Seismic compliance shall be qualified only through shake table testing. Compliance by calculation is not acceptable.

1.07 DELIVERY, STORAGE, AND HANDLING

A. The contractor /installer shall receive, store, protect and handle the low voltage switchboards in accordance with recommended practices listed in manufacturer's Installation Instructions and/or Maintenance Manuals.

B. The manufacturer shall ship each switchboard section in individual shipping splits for ease of handling. Each section shall be mounted on shipping skids and wrapped for protection.

C. The contractor/installer shall inspect and if necessary, report any concealed damage to carrier within 48 hours of the switchboard being delivered. The contractor/installer shall be responsible for all claims with the shipper.

D. The contractor/installer shall store the switchboard in a clean, dry space and shall maintain factory protection and/or cover the equipment with heavy canvas or plastic to keep out dirt, water, construction debris, and traffic. The contractor/installer shall refer to and fully follow the manufacturer's Installation Instructions and/or Maintenance Manuals for any and all requirements to keep the equipment in compliance with the warranty.

E. The contractor/installer shall provide an independent temporary heat source to heat all the switchboard enclosures to prevent condensation.

F. The contractor/installer shall handle the equipment in accordance with all appropriate NEMA and manufacturer's written instructions to avoid damaging the equipment, installed devices and finish. Lift only by installed lifting eyes.

1.08 PROJECT CONDITIONS (SITE ENVIRONMENTAL CONDITIONS)

A. The contractor/installer shall follow all appropriate standards and service conditions before, during and after the switchboard installation.

B. The low voltage switchboards shall be located in well ventilated areas, free from excess humidity, dust and dirt and away from hazardous materials.

C. Ambient temperature of area should be between minus 30 degrees C (-22 degrees F) and plus 40 degrees C (104 degrees F).

D. Indoor locations shall be protected to prevent moisture from entering the enclosure.

1.09 WARRANTY

A. The Manufacturer warrants the switchboard to be free from defects in materials and workmanship for 1 year from date of installation or 18 months from date of shipment, whichever occurs first. The equipment must be received, stored and installed in accordance with the manufacturer's Installation Instructions and/or Maintenance Manuals to avoid nullifying this warranty.

B. In the event of that any warranty work needs to be performed, a representative of the manufacturer shall be notified in writing of the problem. The factory will then issue instructions and any materials to correct the problem. All warranty work must be performed by the manufacturer at the manufacturer's discretion in order to maintain the manufacturer's warranty.

1.10 FIELD MEASUREMENTS

A. The contractor/installer shall make all necessary field measurements to verify that the low voltage switchboards shall fit in the allocated space in full compliance with the minimum required clearances recommended by the manufacturer, specified in National Electrical Code and required by any applicable local/facility constraints.

PART 2 PRODUCTS

2.01 MANUFACTURER & DESIGN

A. General Electric Company products have been used as the basis for design and is the preferred provider for the equipment. Other possible acceptable manufactures are listed below. The listing of specific manufacturers does not imply acceptance of their products that do not meet the specified ratings, features and functions. Manufacturers listed are not relieved from meeting these specifications in their entirety.

1. General Electric – Spectra Series Switchboards (basis of design)

2. Switchboards equivalent to General Electric, Eaton, Schneider

B. Request for acceptance as an approved equal manufacturer must be submitted to the engineer in writing (letter, fax or e-mail) at least 10 business days prior to the bid date. A written (letter, fax or email) response from the engineer/owner will then be issued determining the acceptance or rejection of the request.

C. Any and all exceptions to the requirements detailed in this specification shall be included in the manufacturer's proposal so that the engineer/owner can easily make a comparison to this base specification document.

D. If no exceptions or qualification are contained in the manufacturer's proposal, the manufacturer shall provide exactly what is detailed in this specification document. Failure to meet the requirements of this specification or to note any exceptions or qualifications will result in the technical rejection of the proposal.

E. The first source of general information shall be these general specifications; however, detailed and specific information contained in the drawings will take prescient over these general specifications as the drawings contain project specific information. Should there be a conflict between the plans and specs, the owner/engineer will determine which source of information is correct.

2.02 EQUIPMENT INFORMATION

A. Refer to the project drawings for switchboard layout, location and installed components. The drawings shall also include information about the current and voltage ratings of devices, bus bars and components as well as other assemblies.

B. Equipment Requirements

1. The low voltage switchboards shall be designed for front-accessible connections or front/side-accessible connections. The main and feeder devices shall be circuit breaker type only, fusible devices are not acceptable. Attachment of the group mounted devices shall be by bolted connection. No plug-in type connections shall be used for current carrying components.

2. The NEMA rated switchboards shall be UL listed and shall bear the UL label.

3. The switchboards are intended to provide a means of distributing power throughout the building and are NOT serving as the point of service entrance. As such no UL or cUL Service Entrance Label nor UL or cUL service entrance requirements shall in incorporated into the equipment.

4. The overall equipment enclosure shall be NEMA 1 dead-front construction, intended for indoor use primarily to provide a degree of protection against contact with the enclosed equipment.

5. The general switchboard orientation (main section / feeder section layout) as standard or reversed shall be based on the project floor plan drawings and the switchboard front elevation drawings.

6. The section alignment of the switchboards shall be rear aligned for a minimum footprint in the electrical room. The lineup shall be comprised of fully self-supporting structures with 90 inch tall vertical sections (excluding lifting eyes and pull boxes) bolted together to form required arrangement.

7. The equipment frames shall be die formed using code gauge steel with reinforced corner gussets. The frame shall be rigidly bolted to support code gauge steel cover plates, bus bars and installed devices.

8. All switchboard sections shall have open bottoms and removable top plates to install the conduit. The sections shall be capable of being rolled, moved or lifted into position. Switchboards shall be capable of being bolted directly to the floor without the use of floor sills.

9. Provide hinged doors over any installed metering compartments and/or any installed individually mounted device compartments. If provided, these doors shall have concealed hinges and be fastened by hex head bolts. All other covers shall be fastened by hex head bolts.

10. Protective devices shall be furnished as shown on the project drawings and specified herein, including interconnections, instrumentation and control wiring. Switchboards and devices shall be rated for the voltage and frequency listed on the project drawings.

11. All steel surfaces shall be chemically cleaned prior to painting. The exterior paint color shall be manufacturer's standard gray over phosphate-type rust inhibitor.

12. Switchboard current ratings, including all devices, shall be based on a maximum ambient temperature of 25 degree C (77 degree F) per UL Standard 891. With no de-rating required, temperature rise of switchboards and devices shall not exceed 65 degrees C (150 degrees F) in a 25 degree C (77 degree F) ambient environment.

C. The low voltage switchboards with protective devices shall be rated 277/480 volts at a 60 hertz frequency with a Wye service connection.

D. The associated phase and wire configuration for the switchboards shall be a three-phase / four-wire, WYE configuration for the referenced voltage. A neutral bus shall be provided and any installed devices shall be rated for this 3P/4W wye potential.

E. The overall switchboard assembly shall have a minimum short circuit rating of 65k RMS symmetrical amperes at the voltage noted above. This value shall be equal to or greater than the short-circuit available from all sources. All main breakers, all feeder breakers and the bus bar bracing shall be rated to this minimum value. The switchboard shall also contain a label showing this short circuit value at rated voltage.

F. Bussing Requirements

1. The bus bars shall be silver-plated copper and shall have sufficient cross sectional area to meet UL 891 temperature rise requirements through actual tests. The main incoming bus bars shall be rated for the main protection device frame size or the main incoming conductors if there is no main device. For a three-phase / four-wire system, a neutral bus shall be provided and it shall have the same ampacity as the phase bus.

2. The bus bars shall be braced to withstand the mechanical forces exerted during short circuit conditions as noted above in the AIC ratings section of this specification, but in no case shall the bracing be less than 65KA RMS symmetrical.

3. Bus bars shall be mounted on high impact, non-tracking insulated supports. Joints in the section vertical bus are not permitted.

4. Bus joints shall be bolted with high tensile steel bolts. Belleville type washers shall be provided with aluminum bus. Welded connections are not acceptable.

5. A-B-C bus arrangement (left to right, top to bottom, front to rear) shall be used throughout to assure convenient and safe testing and maintenance. Where special circuitry precludes this arrangement, bus bars shall be labeled.

6. All feeder device line connection straps shall be rated to carry current rating of device frame (not the device trip rating).

7. The ground bus shall be made of copper and sized to meet UL 891. It shall extend the full length of switchboard.

8. The main horizontal bus bars shall be fully rated and arranged for future extensions.

2.03 MAIN PROTECTIVE DEVICES

A. Furnish GE type Power Break II Insulated Case Circuit Breakers or equal for the switchboard main device. The main breaker shall be individually mounted in a vertical section of the equipment and shall be mechanically operated and stationary mounted.

B. The circuit breaker frame shall be constructed of a high dielectric strength, glass reinforced insulating case. Construction shall provide a double level of insulation between primary current-carrying parts and operating personnel. The interrupting mechanism shall contain arc chutes. Steel vent grids shall be used to suppress arcs and cool vented gases. Interphase barriers shall completely isolate each pole.

C. Breakers shall contain a true two-step stored energy operating mechanism which shall provide quick make, quick break operation with a maximum five cycle closing time. Breakers shall be trip free at all times. Common tripping of all poles shall be standard.

D. A charging handle, close push-button, open push-button, Off/On indicator and Discharged/Charged indicator shall be located on the breaker escutcheon and shall be visible with the breaker compartment door closed.

E. Insulated case circuit breakers shall be rated to carry 100 percent of their frame ampacity continuously and shall be suitable for reverse feeding.

F. The main breaker device and main incoming bus shall be rated as shown on the project drawings.

G. Digital Electronic Trip Unit Requirements for Circuit Breaker

1. Not Applicable

2.04 **FEEDER PROTECTIVE DEVICES**

A. Feeder devices rated 1200 amps and below shall be group mounted molded case circuit breakers as specified below. These group mounted beakers shall be connected to the vertical bus by bolted connections.

1. Furnish GE Spectra RMS Molded Case Circuit Breakers or equal as the switchboard feeder devices. These feeder breaker shall be mechanically operated and stationary mounted.

2. The circuit breaker frame shall be constructed of a high-strength, molded, glass-reinforced polyester case and cover. Breakers shall have an over the center, toggle handle-operated, trip free mechanism with quick make, quick break action independent of the speed of the toggle handle operation. The design shall provide common tripping of all poles and shall be suitable for reverse feeding.

3. An ON and OFF position shall be clearly marked on escutcheon. A trip-to-test means shall also be provided on the front of the breaker for manually tripping the breaker and exercising the mechanism and trip latch.

4. The breakers shall be UL listed for standard duty and are to be applied at 80% of their current rating. For Canadian applications the breakers shall be CSA tested and listed.

5. Factory installed CU/AL mechanical lugs are to be provided with these breaker. The lugs shall be UL listed and rated 75 or 60/75 degrees C as appropriate. For Canadian applications the terminations shall be CSA tested and listed

6. Standard Digital Electronic Trip Unit Requirements for Feeder Circuit Breaker 1200 Amperes and Below

a. Unless otherwise noted on the project drawings, the GE Spectra RMS Molded Case Circuit Breakers or equal, shall be provided with integral digital solid-state, ambient insensitive trip units to provide overload and short circuit protection. It shall accurately sense sinusoidal and non-sinusoidal current waveforms by continuously sampling each phase throughout every cycle.

b. The breaker trip units shall use UL listed interchangeable rating plugs to establish (or change) the nominal trip rating of the breaker. These rating plugs shall contain rejection features to prevent installation of a plug with an incorrect current sensor rating. Breakers without rating plugs are unacceptable and will be technically rejected.

c. To accommodate a variety of current inrush situations, the breakers shall have a single, customer-adjustable, instantaneous pickup knob to set the instantaneous response for all poles. These settings will be based on

the value of the rating plug. As a minimum the instantaneous pickup range shall be from 3.0 times to 10.0 times the rating plug value.

d. In addition, there shall be a short-time pickup setting at approximately 50% to 80% of the instantaneous pickup to provide for closer curve shaping ability with downstream devices. Should this integral short-time follow-on function not be available, a separate adjustable short-time pickup & a separate adjustable short-time delay function shall be provided. These alternate short-time settings will be based on the value established by the rating plug and the long-time pickup setting (as such an adjustable long-time pickup & adjustable long-time delay function will also be required). To provide comparable capability, the short-time pickup value range need only be from 0.5 times to 8.0 times.

7. Enhanced Digital Electronic Trip Unit Requirements for Feeder Circuit Breakers 1200 Amperes and Below

a. As indicated on the project drawings, all trip units shall require standard adjustable instantaneous only settings. Enhanced Digital Electronic Trip Units are not required.

B. Any feeder devices rated over 1200 amperes shall be individually mounted insulated case circuit breakers as specified below.

1. Where feeders are shown over 1200 amperes on the project drawings, furnish GE type Power Break II Insulated Case Circuit Breakers or equal for these loads. Each breaker shall be individually mounted in a vertical section of the equipment and shall be mechanically operated and stationary mounted.

2. The circuit breaker frame shall be constructed of a high dielectric strength, glass reinforced insulating case. Construction shall provide a double level of insulation between primary current-carrying parts and operating personnel. The interrupting mechanism shall contain arc chutes. Steel vent grids shall be used to suppress arcs and cool vented gases. Interphase barriers shall completely isolate each pole.

3. Breakers shall contain a true two-step stored energy operating mechanism which shall provide quick make, quick break operation with a maximum five cycle closing time. Breakers shall be trip free at all times. Common tripping of all poles shall be standard.

4. A charging handle, close push-button, open push-button, Off/On indicator and Discharged/Charged indicator shall be located on the breaker escutcheon and shall be visible with the breaker compartment door closed.

5. Insulated case circuit breakers shall be rated to carry 100 percent of their frame ampacity continuously and shall be suitable for reverse feeding.

6. Digital Electronic Trip Unit Requirements for Feeder Circuit Breakers over 1200 Amperes (Not applicable)

a. The GE type Power Break II insulated case circuit breakers or equal, shall be provided with integral microprocessor, ambient insensitive trip units. It shall accurately sense sinusoidal and non-sinusoidal current waveforms by continuously sampling each phase throughout every cycle.

The GE MicroVersaTrip or equal trip units shall provide the protective, status and metering functions detailed below.

b. The protective trip unit shall consist of a solid state, microprocessor based programmer; tripping means; current sensors; power supply and other devices as required for proper operation. The current sensors shall be mounted on the breaker frame and shall use encapsulated construction to protect against damage and moisture.

c. The breaker trip units shall use UL Listed, CSA Certified, IEC 947-2 Certified, field-installable, interchangeable rating plugs to establish (or change) the base trip rating of the breaker. It shall not be necessary to change or remove the trip unit to change the rating plug. The rating plugs shall contain rejection features to prevent installation of a plug with an incorrect current sensor rating. Breakers without rating plugs are unacceptable and will be technically rejected.

d. An integral test jack for testing the trip unit / breaker via a portable test set shall be provided. To prevent unauthorized changing of breaker settings, a mechanism for sealing the rating plug and the trip unit shall also be supplied.

e. The trip unit shall be equipped with long-life lithium batteries -- with automatic time delay shut-off features -- to provide both programming and observation of trip targets or other functions when the breaker is de-energized.

f. An integral LCD or similar type LED display will allow visual indication of setpoints, status and metering. A button keypad or similar dial-type mechanism shall be used to establish (or change) the protective functions listed below.

g. Adjustable long-time pickup & adjustable long-time delay shall be provided to allow user flexibility of the long time trip rating and lessen the need to change rating plugs to establish the base trip setting. The settings will be based on the value of the rating plug. As a minimum the long-time pickup value range shall be from 0.5 times to 1.0 times the rating plug value with a minimum of 4 long-time time bands.

h. A long-time pickup warning indicator shall be provided to signal that the breaker is approaching an overcurrent situation. As the current in any phase reaches 95% of its setpoint, the word 'PICKUP' shall begin to flash. As current increases, flashing frequency increases, until 100% of the pickup point is reached . At that moment, PICKUP remains ON, continuously, until the long-time delay times out.

i. Adjustable short-time pickup & adjustable short-time delay shall be provided for closer curve shaping ability with downstream devices. These settings will be based on the value established by the rating plug and the long-time pickup setting. As a minimum the short-time pickup value range shall be from 1.5 times to 9.0 times. To better coordinate with either 'step-type' digital breaker devices or 'sloping' thermal-magnetic breakers or fuses, a minimum of 3 short-time I2t -in time bands and 3 short-time I2t -out time bands shall be provided.

j. Adjustable instantaneous pickup shall be provided to accommodate a variety of current inrush situations. These settings will be based on the value of the rating plug. As a minimum the instantaneous pickup value range shall be from 1.5 times to 10.0 times the rating plug value.

k. As indicated on the project drawings; where feeder breakers have an 'LSIG' notation next to the breaker symbol, the 'G' denotes ground-fault protection. Any feeder breaker with the 'G' designation, shall have a trip unit with adjustable ground-fault pickup & adjustable ground-fault delay. These settings will be based on the value established by the internal current sensor ratings of the breaker. As a minimum the ground-fault pickup value range shall be from 0.2 times to a maximum of 1200 amperes. To better coordinate with either 'step-type' devices or 'sloping' devices, a minimum of 3 short-time I2t -in time bands and 3 short-time I2t -out time bands shall be provided.

l. If ground fault protection is shown on the project drawings for feeder beakers, it shall be integral to the breaker trip unit functions and shall be solid state type based on zero sequence functionality. Also the ground fault protective function, shall contain a memory circuit to integrate low level arcing fault currents with time, to sum the intermittent ground fault spikes.

m. Should the supply source be a three-phase / four-wire system, a neutral current sensor must be provided with any feeder breaker equipped with ground fault protection so that a neutral input signal can be provided to the trip unit for proper ground-fault calculations.

n. The trip unit shall be provided with an ammeter, showing the current values using digital numerals. Each phase shall be selectable via a pushbutton or similar device. The display shall scale automatically from Amps (A) to KiloAmps (KA). Should the trip unit not contain an integral ammeter as described above, then a separate ammeter with dedicated CT's, CT shorting blocks and phase selector device shall be provided for each breaker

o. To aid in determining the reason for a circuit breaker trip, display trip targets for long-time, short-time and instantaneous shall be supplied. Additionally, the trip unit shall have an integral, resettable trip counter to record the number of long-time, short-time, and instantaneous trips. If the trip unit is also provided with ground-fault protection, then a display trip target for ground-fault must also be provided as well as the counter to record the number of ground-fault trips.If the trip unit is also provided with ground-fault protection, then a display trip target for ground-fault must also be provided as well as the counter to record the number of ground-fault trips.

2.05 FACTORY INSTALLED MAIN TVSS

A. There is no requirement for surge suppression devices in the switchboards, as such there are no integral transient voltage surge suppressor (TVSS) / surge protective devices (SPD) are indicated on the project drawings.

2.06 FACTORY INSTALLED MAIN CUSTOMER METER

A. There is no requirement for customer/user metering on the main incoming service, as such there is no customer meter shown on the project drawings.

2.07 FACTORY PROVIDED MAIN UTILITY METERING COMPARTMENT

A. There is no requirement for a main utility metering compartment on the main incoming service, as such there is no utility metering compartment shown on the project drawings.

2.08 FACTORY PROVIDED MAIN FIRE PUMP TAP COMPARTMENT

A. There is no requirement for a fire pump tap for the main incoming service, as such there is no fire tap pump compartment shown on the project drawings.

2.09 EQUIPMENT OPTIONS

A. Furnish nameplates for each circuit breaker in the switchboard lineup. The engraving shall be black lettering with a white background. Use the project one-line diagram and/or switchboard schedule to determine the breaker nameplate engraving.

2.10 ACCESSORIES

A. Not Applicable – no other accessories are required.

2.11 TESTING

A. Normal factory quality, function and operational testing shall be provided.

PART 3 EXECUTION

3.01 EXAMINATION

A. The following examinations shall be performed by the contractor/installer.

1. Verify that the field measurements of the lineup are the same as shown on the factory drawings.

2. Inspect the General Electric Spectra Series™ Switchboards and confirm that they are ready to be installed.

3. Check concrete pads for uniformity and level surface.

4. Examine the installation area to assure there is enough clearance to install the low voltage switchboards such that they will fit in the allocated space in full compliance with the minimum required clearances recommended by the manufacturer, specified in National Electrical Code and required by any applicable local/facility constraints.

5. Confirm that required utilities are available, in the proper location and ready for use.

B. Beginning of installation means that the contractor/installer accepts these conditions.

3.02 LOCATION

A. Refer to the projects site layout drawings for details regarding the proper area to place the equipment.

3.03 INSTALLATION

A. The contractor/installer shall furnish and completely install the low voltage switchboards as shown on the factory drawings and per manufacturer's installation instructions. All necessary hardware to secure the equipment in place shall be provided by the contractor/installer.

B. The contractor/installer shall provide and install any required safety labels.

3.04 FIELD QUALITY CONTROL

A. The following quality control checks shall be performed by the contractor/installer.

1. Inspect the installed switchboards for proper anchoring, alignment and grounding as well as inspecting them for any internal and external physical damage.

2. Confirm that all shipping members have been removed.

3. Check the tightness of all accessible mechanical and electrical connections with a calibrated torque wrench. The minimum acceptable values are specified in the manufacturer's instructions.

4. Refer to manufacturer's instruction books for any other requirements applicable to the switchboard or any factory installed component.

5. Check each electrical bus for proper phasing and identification.

6. Attach a phase rotation meter to the switchboard main bus and observe proper phase sequences.

7. Check and test each breaker for proper mechanical and electrical operation.

8. Check any installed TVSS device.

9. Check any installed digital multifunction meters.

3.05 ADJUSTING

A. The contractor/installer shall adjust all access doors and operating handles for free mechanical and electrical operation as described in the manufacturer's instructions.

B. The contractor/installer shall refer to the manufacturer's instruction book to make adjustments to mechanisms, doors, handles, interlocks, etceteras, as required.

C. The contractor/installer shall set all adjustable protective devices to the values recommend in the coordination study for this project – as provided by Owner. Examples of adjustable protective devices are listed below:

1. Molded case circuit breakers with integral digital solid-state trip units having adjustable instantaneous pickup dials. The proper instantaneous values shall be set for any breakers containing this function.

2. Molded case circuit breakers with integral microprocessor trip units having any of the following adjustable functions: long-time pickup, long-time delay, short-time pickup, short-time delay, instantaneous pickup, ground-fault pickup, and ground-fault. The proper values shall be set for any breakers containing these functions.

3. Insulated case circuit breakers with microprocessor trip units having any of the following adjustable functions: long-time pickup, long-time delay, short-time pickup, short-time delay, instantaneous pickup, ground-fault pickup, and ground-fault. The proper values shall be set for any breakers containing these functions.

D. The contractor/installer shall set any digital multifunction metering devices to the proper amperage (per the installed C/T's), the proper voltage (per the source voltage), the proper phase and wire arrangement (per the source service), etc.

3.06 CLEANING

A. The contractor/installer shall clean the interior and exterior of the switchboard to remove construction debris, dirt, and shipping materials.

B. The contractor/installer shall repaint scratched or marred exterior surfaces to match the original finish.

3.07 TRAINING

A. Not Applicable – no training on the switchboards is required.

PART 4

4.01 ADDITIONAL NOTES AND REQUIREMENTS

A. No Main Breaker, Switchboard serves as extension to incoming service with main service breaker directly adjacent. See accompanying single line diagrams and layout drawings.

B. Breakers rated for 1200amperes to be fully rated.

END OF SECTION

ITEM 2 - MICROGRID SWITCHBOARD

PART 1 GENERAL

1.01 SECTION INCLUDES

Provide low voltage, front-accessible and front/side-accessible switchboards with circuit breaker mains and circuit breaker feeders as specified below and as shown on the contract drawings. See drawing E-1.S for Single Line Diagram, Electrical Specification Item #2, for detailed requirements.

1.02 RELATED SECTIONS

Not Applicable – No related sections

1.03 REFERENCES

As applicable to the specifics of the project drawings and the specifics of the equipment design for this project, the low voltage switchboards, installed protective devices and other factory installed components in this specification shall be designed and manufactured according to latest revision of the following standards (unless otherwise noted on the project drawings or annotated in any sections below).

1. ANSI/NEMA PB 2, Deadfront Distribution Switchboards
2. ANSI/NEMA PB 2.1, General Instructions for Proper Handling, Installation, Operation, and Maintenance of Deadfront Distribution Switchboards Rated 600 Volts or Less
3. NEMA AB 1, Molded Case Circuit Breakers and Molded Case Switches
4. NFPA 70, National Electrical Code
5. UL 489, Molded Case Circuit Breakers and Circuit Breaker Enclosures
6. UL 891, Dead Front Switchboards
7. CSA C22.2 No. 29-M1989, Panelboards and Enclosed Panelboards
8. CSA-C22.2 No. 4-M89, Enclosed Switches
9. CSA-C22.2 No. 5.1-M91, Molded Case Circuit Breakers

When shown on the project drawings or noted in the specification sections below, the Transient Voltage Surge Suppression (TVSS) units shall be designed and manufactured according to latest revision of the following standards (unless otherwise noted on the project drawings or annotated in any sections below).

10. ANSI/IEEE C62.41.1-2002, Guide on the Surge Environment in Low Voltage AC Power Circuits
11. ANSI/IEEE C62.41.2-2002, Recommended Practice on Characterization of Surges in Low Voltage AC Power Circuits
12. ANSI/IEEE C62.45-2002, Recommended Practice on Surge Testing for Equipment Connected to Low Voltage AC Power Circuits

13. NEMA LS-1 (1992), Low Voltage Surge Protective Devices

14. NFPA 70 National Electrical Code – Article 285

15. UL 1283, Electromagnetic Interference Filters

16. UL 1449, Second Edition - Transient Voltage Surge Suppressors

1.04 DEFINITIONS

Overcurrent Protective Device = a circuit breaker pole. Example: a 2-pole device is considered 2 protective devices.

Short Circuit Rating = shall be the interrupting rating of lowest rated device in the switchboard or applicable UL series rating for proper main and branch device combinations.

Protective Devices = Molded case circuit breakers.

Front-Accessible Only = As defined by the UL 891 standard which requires that all line and load connections for phase, neutral, and ground conductors can be made and maintained from the front of the switchboard without access to the rear.

1.05 SUBMITTALS

The contractor/installer shall provide 5 paper copies of the following documents as APPROVAL drawings to the engineer/owner for review and evaluation. It is preferred that the drawings be provided on size “A” (8.5” x 11”) or size “B” (11” x 17”) paper to facilitate easy copying. The equipment manufacturer shall provide the factory drawings, factory diagrams, factory bill of material and product data sheets for factory installed components. Manufacturing of the equipment will not begin until the submitted documents are stamped “approved” or “approved as noted” by the engineer/owner and officially released for manufacturer by the contractor/installer/distributor/owner.

APPROVAL documents for the specified product shall include:

1. Equipment Front View – by the equipment manufacturer

2. Equipment Plan View, which includes Available Conduit Area – by the equipment manufacturer

3. Equipment Bussing or One Line Diagrams – by the equipment manufacturer

4. Component Level Bill of Material – by the equipment manufacturer

5. Component Elementary Diagrams – by the equipment manufacturer

6. Equipment Brochure, detailing the general construction of the product – by the equipment manufacturer

7. Product Data Sheets for major factory installed components – by the equipment manufacturer

The contractor/installer shall provide 5 paper copies of the following documents to reflect the AS BUILT condition of the equipment to the engineer/owner for their record documentation. It is preferred that the drawings be provided on size “A” (8.5” x 11”) or size “B” (11” x 17”) paper to facilitate easy copying. The

equipment manufacturer shall provide the factory drawings, factory diagrams, factory bill of material and product data sheets for factory installed components.

AS BUILT documents for the specified product shall include:

8. Equipment Front View – by the equipment manufacturer

9. Equipment Plan View, which includes Available Conduit Area – by the equipment manufacturer

10. Equipment Bussing or One Line Diagrams – by the equipment manufacturer

11. Component Level Bill of Material – by the equipment manufacturer

12. Component Elementary Diagrams – by the equipment manufacturer

13. Equipment Operation and Maintenance Manual – by the equipment manufacturer

14. Users Guide for major factory installed components – by the equipment manufacturer

1.06 QUALITY ASSURANCE (QUALIFICATIONS)

The manufacturer shall have specialized in the manufacture and assembly of low voltage switchboards for at least 25 years.

The low voltage switchboards shall be listed and/or classified by Underwriters Laboratories in accordance with the standards listed in the “REFERENCES” section of this specification above.

Equipment shall be qualified for use in seismic areas as follows:

1. High seismic loading as defined in IEEE Std 693-1997, with 1.33 amplification factor.

2. IBC-2003, Sds = 1.05g, Ss = 158%, Ip = 1.5, for all z/h greater than 0 and Sds = 1.67g, Ss = 250%, Ip = 1.5, for z/h equal to 0 in accordance with ICC-ES-AC156.

3. Seismic compliance shall be qualified only through shake table testing. Compliance by calculation is not acceptable.

1.07 DELIVERY, STORAGE, AND HANDLING

The contractor /installer shall receive, store, protect and handle the low voltage switchboards in accordance with recommended practices listed in manufacturer's Installation Instructions and/or Maintenance Manuals.

The manufacturer shall ship each switchboard section in individual shipping splits for ease of handling. Each section shall be mounted on shipping skids and wrapped for protection.

The contractor/installer shall inspect and if necessary, report any concealed damage to carrier within 48 hours of the switchboard being delivered. The contractor/installer shall be responsible for all claims with the shipper.

The contractor/installer shall store the switchboard in a clean, dry space and shall maintain factory protection and/or cover the equipment with heavy canvas or plastic to keep out dirt, water, construction

debris, and traffic. The contractor/installer shall refer to and fully follow the manufacturer's Installation Instructions and/or Maintenance Manuals for any and all requirements to keep the equipment in compliance with the warranty.

The contractor/installer shall provide an independent temporary heat source to heat all the switchboard enclosures to prevent condensation.

The contractor/installer shall handle the equipment in accordance with all appropriate NEMA and manufacturer's written instructions to avoid damaging the equipment, installed devices and finish. Lift only by installed lifting eyes.

1.08 PROJECT CONDITIONS (SITE ENVIRONMENTAL CONDITIONS)

The contractor/installer shall follow all appropriate standards and service conditions before, during and after the switchboard installation.

The low voltage switchboards shall be located in well ventilated areas, free from excess humidity, dust and dirt and away from hazardous materials.

Ambient temperature of area should be between minus 30 degrees C (-22 degrees F) and plus 40 degrees C (104 degrees F).

Indoor locations shall be protected to prevent moisture from entering the enclosure.

1.09 WARRANTY

The Manufacturer warrants the switchboard to be free from defects in materials and workmanship for 1 year from date of installation or 18 months from date of shipment, whichever occurs first. The equipment must be received, stored and installed in accordance with the manufacturer's Installation Instructions and/or Maintenance Manuals to avoid nullifying this warranty.

In the event of that any warranty work needs to be performed, a representative of the manufacturer shall be notified in writing of the problem. The factory will then issue instructions and any materials to correct the problem. All warranty work must be performed by the manufacturer at the manufacturer's discretion in order to maintain the manufacturer's warranty.

1.10 FIELD MEASUREMENTS

The contractor/installer shall make all necessary field measurements to verify that the low voltage switchboards shall fit in the allocated space in full compliance with the minimum required clearances recommended by the manufacturer, specified in National Electrical Code and required by any applicable local/facility constraints.

PART 2 PRODUCTS

2.01 MANUFACTURER & DESIGN

General Electric Company products have been used as the basis for design and is the preferred provider for the equipment. Other possible acceptable manufactures are listed below. The listing of specific manufacturers does not imply acceptance of their products that do not meet the specified ratings, features and functions. Manufacturers listed are not relieved from meeting these specifications in their entirety.

1. General Electric – Spectra Series Switchboards (basis of design)

2. Switchboards equivalent to General Electric: Eaton, Siemens

Request for acceptance as an approved equal manufacturer must be submitted to the engineer in writing (letter, fax or e-mail) at least 10 business days prior to the bid date. A written (letter, fax or email) response from the engineer/owner will then be issued determining the acceptance or rejection of the request.

Any and all exceptions to the requirements detailed in this specification shall be included in the manufacturer's proposal so that the engineer/owner can easily make a comparison to this base specification document.

If no exceptions or qualification are contained in the manufacturer's proposal, the manufacturer shall provide exactly what is detailed in this specification document. Failure to meet the requirements of this specification or to note any exceptions or qualifications will result in the technical rejection of the proposal.

The first source of general information shall be these general specifications; however, detailed and specific information contained in the drawings will take prescient over these general specifications as the drawings contain project specific information. Should there be a conflict between the plans and specs, the owner/engineer will determine which source of information is correct.

2.02 EQUIPMENT INFORMATION

Refer to the project drawings for switchboard layout, location and installed components. The drawings shall also include information about the current and voltage ratings of devices, bus bars and components as well as other assemblies.

Equipment Requirements

1. The low voltage switchboards shall be designed for front-accessible connections or front/side-accessible connections. The main and feeder devices shall be circuit breaker type only, fusible devices are not acceptable. Attachment of the group mounted devices shall be by bolted connection. No plug-in type connections shall be used for current carrying components.

2. The NEMA rated switchboards shall be UL listed and shall bear the UL label.

3. The switchboards are intended to provide a means of distributing power throughout the building and are NOT serving as the point of service entrance. As such no UL or cUL Service Entrance Label nor UL or cUL service entrance requirements shall in incorporated into the equipment.

4. The overall equipment enclosure shall be NEMA 1 dead-front construction, intended for indoor use primarily to provide a degree of protection against contact with the enclosed equipment.

5. The general switchboard orientation (main section / feeder section layout) as standard or reversed shall be based on the project floor plan drawings and the switchboard front elevation drawings.

6. The section alignment of the switchboards shall be rear aligned for a minimum footprint in the electrical room. The lineup shall be comprised of fully self-supporting structures with 90 inch tall vertical sections (excluding lifting eyes and pull boxes) bolted together to form required arrangement.

7. The equipment frames shall be die formed using code gauge steel with reinforced corner gussets. The frame shall be rigidly bolted to support code gauge steel cover plates, bus bars and installed devices.

8. All switchboard sections shall have open bottoms and removable top plates to install the conduit. The sections shall be capable of being rolled, moved or lifted into position. Switchboards shall be capable of being bolted directly to the floor without the use of floor sills.

9. Provide hinged doors over any installed metering compartments and/or any installed individually mounted device compartments. If provided, these doors shall have concealed hinges and be fastened by hex head bolts. All other covers shall be fastened by hex head bolts.

10. Protective devices shall be furnished as shown on the project drawings and specified herein, including interconnections, instrumentation and control wiring. Switchboards and devices shall be rated for the voltage and frequency listed on the project drawings.

11. All steel surfaces shall be chemically cleaned prior to painting. The exterior paint color shall be manufacturer's standard gray over phosphate-type rust inhibitor.

12. Switchboard current ratings, including all devices, shall be based on a maximum ambient temperature of 25 degree C (77 degree F) per UL Standard 891. With no de-rating required, temperature rise of switchboards and devices shall not exceed 65 degrees C (150 degrees F) in a 25 degree C (77 degree F) ambient environment.

The low voltage switchboards with protective devices shall be rated 277/480 volts at a 60 hertz frequency with a Wye service connection.

The associated phase and wire configuration for the switchboards shall be a three-phase / four-wire, WYE configuration for the referenced voltage. A neutral bus shall be provided and any installed devices shall be rated for this 3P/4W wye potential.

The overall switchboard assembly shall have a minimum short circuit rating of 65k RMS symmetrical amperes at the voltage noted above. This value shall be equal to or greater than the short-circuit available from all sources. All main breakers, all feeder breakers and the bus bar bracing shall be rated to this minimum value. The switchboard shall also contain a label showing this short circuit value at rated voltage.

Bussing Requirements

1. The bus bars shall be silver-plated copper and shall have sufficient cross sectional area to meet UL 891 temperature rise requirements through actual tests. The main incoming bus bars shall be rated for the main protection device frame size or the main incoming conductors if there is no main device. For a three-phase / four-wire system, a neutral bus shall be provided and it shall have the same ampacity as the phase bus.

2. The bus bars shall be braced to withstand the mechanical forces exerted during short circuit conditions as noted above in the AIC ratings section of this specification, but in no case shall the bracing be less than 65KA RMS symmetrical.

3. Bus bars shall be mounted on high impact, non-tracking insulated supports. Joints in the section vertical bus are not permitted.

4. Bus joints shall be bolted with high tensile steel bolts. Belleville type washers shall be provided with aluminum bus. Welded connections are not acceptable.

5. A-B-C bus arrangement (left to right, top to bottom, front to rear) shall be used throughout to assure convenient and safe testing and maintenance. Where special circuitry precludes this arrangement, bus bars shall be labeled.

6. All feeder device line connection straps shall be rated to carry current rating of device frame (not the device trip rating).

7. The ground bus shall be made of copper and sized to meet UL 891. It shall extend the full length of switchboard.

8. The main horizontal bus bars shall be fully rated and arranged for future extensions.

2.03 MAIN PROTECTIVE DEVICES

Furnish GE type Power Break II Insulated Case Circuit Breakers or equal for the switchboard main device. The main breaker shall be individually mounted in a vertical section of the equipment and shall be mechanically operated and stationary mounted.

The circuit breaker frame shall be constructed of a high dielectric strength, glass reinforced insulating case. Construction shall provide a double level of insulation between primary current-carrying parts and operating personnel. The interrupting mechanism shall contain arc chutes. Steel vent grids shall be used to suppress arcs and cool vented gases. Interphase barriers shall completely isolate each pole.

Breakers shall contain a true two-step stored energy operating mechanism which shall provide quick make, quick break operation with a maximum five cycle closing time. Breakers shall be trip free at all times. Common tripping of all poles shall be standard.

A charging handle, close push-button, open push-button, Off/On indicator and Discharged/Charged indicator shall be located on the breaker escutcheon and shall be visible with the breaker compartment door closed.

Insulated case circuit breakers shall be rated to carry 100 percent of their frame ampacity continuously and shall be suitable for reverse feeding.

The main breaker device and main incoming bus shall be rated as shown on the project drawings.

Digital Electronic Trip Unit Requirements for Circuit Breaker

1. Not Applicable

2.04 FEEDER PROTECTIVE DEVICES

Feeder devices rated 1200 amps and below shall be group mounted molded case circuit breakers as specified below. These group mounted beakers shall be connected to the vertical bus by bolted connections.

A. Furnish GE Spectra RMS Molded Case Circuit Breakers or equal as the switchboard feeder devices. These feeder breaker shall be mechanically operated and stationary mounted.

1. The circuit breaker frame shall be constructed of a high-strength, molded, glass-reinforced polyester case and cover. Breakers shall have an over the center, toggle handle-operated, trip free mechanism with quick make, quick break action independent of the speed of the toggle handle operation. The design shall provide common tripping of all poles and shall be suitable for reverse feeding.

2. An ON and OFF position shall be clearly marked on escutcheon. A trip-to-test means shall also be provided on the front of the breaker for manually tripping the breaker and exercising the mechanism and trip latch.

3. The breakers shall be UL listed for standard duty and are to be applied at 80% of their current rating. For Canadian applications the breakers shall be CSA tested and listed.

4. Factory installed CU/AL mechanical lugs are to be provided with these breaker. The lugs shall be UL listed and rated 75 or 60/75 degrees C as appropriate. For Canadian applications the terminations shall be CSA tested and listed

5. Standard Digital Electronic Trip Unit Requirements for Feeder Circuit Breaker 1200 Amperes and Below

   a. Unless otherwise noted on the project drawings, the GE Spectra RMS Molded Case Circuit Breakers or equal, shall be provided with integral digital solid-state, ambient insensitive trip units to provide overload and short circuit protection. It shall accurately sense sinusoidal and non-sinusoidal current waveforms by continuously sampling each phase throughout every cycle.

   b. The breaker trip units shall use UL listed interchangeable rating plugs to establish (or change) the nominal trip rating of the breaker. These rating plugs shall contain rejection features to prevent installation of a plug with an incorrect current sensor rating. Breakers without rating plugs are unacceptable and will be technically rejected.

   c. To accommodate a variety of current inrush situations, the breakers shall have a single, customer-adjustable, instantaneous pickup knob to set the instantaneous response for all poles. These settings will be based on the value of the rating plug. As a minimum the instantaneous pickup range shall be from 3.0 times to 10.0 times the rating plug value.

   d. In addition, there shall be a short-time pickup setting at approximately 50% to 80% of the instantaneous pickup to provide for closer curve shaping ability with downstream devices. Should this integral short-time follow-on function not be available, a separate adjustable short-time pickup & a separate adjustable short-time delay function shall be provided. These alternate short-time settings will be based on the value established by the rating plug and the long-time pickup setting (as such an adjustable long-time pickup & adjustable long-time delay function will also be required). To provide comparable capability, the short-time pickup value range need only be from 0.5 times to 8.0 times.

6. Enhanced Digital Electronic Trip Unit Requirements for Feeder Circuit Breakers 1200 Amperes and Below

   a. As indicated on the project drawings, all trip units shall require standard adjustable instantaneous only settings. Enhanced Digital Electronic Trip Units are not required.

Any feeder devices rated over 1200 amperes shall be individually mounted insulated case circuit breakers as specified below.

1. Where feeders are shown over 1200 amperes on the project drawings, furnish GE type Power Break II Insulated Case Circuit Breakers or equal for these loads. Each breaker shall be individually mounted in a vertical section of the equipment and shall be mechanically operated and stationary mounted.

2. The circuit breaker frame shall be constructed of a high dielectric strength, glass reinforced insulating case. Construction shall provide a double level of insulation between primary current-carrying parts and operating personnel. The interrupting mechanism shall contain arc chutes. Steel vent grids shall be used to suppress arcs and cool vented gases. Interphase barriers shall completely isolate each pole.

3. Breakers shall contain a true two-step stored energy operating mechanism which shall provide quick make, quick break operation with a maximum five cycle closing time. Breakers shall be trip free at all times. Common tripping of all poles shall be standard.

4. A charging handle, close push-button, open push-button, Off/On indicator and Discharged/Charged indicator shall be located on the breaker escutcheon and shall be visible with the breaker compartment door closed.

5. Insulated case circuit breakers shall be rated to carry 100 percent of their frame ampacity continuously and shall be suitable for reverse feeding.

6. Digital Electronic Trip Unit Requirements for Feeder Circuit Breakers over 1200 Amperes (Not applicable)

   a. The GE type Power Break II insulated case circuit breakers or equal, shall be provided with integral microprocessor, ambient insensitive trip units. It shall accurately sense sinusoidal and non-sinusoidal current waveforms by continuously sampling each phase throughout every cycle. The GE MicroVersaTrip or equal trip units shall provide the protective, status and metering functions detailed below.

   b. The protective trip unit shall consist of a solid state, microprocessor based programmer; tripping means; current sensors; power supply and other devices as required for proper operation. The current sensors shall be mounted on the breaker frame and shall use encapsulated construction to protect against damage and moisture.

   c. The breaker trip units shall use UL Listed, CSA Certified, IEC 947-2 Certified, field-installable, interchangeable rating plugs to establish (or change) the base trip rating of the breaker. It shall not be necessary to change or remove the trip unit to change the rating plug. The rating plugs shall contain rejection features to prevent installation of a plug with

an incorrect current sensor rating. Breakers without rating plugs are unacceptable and will be technically rejected.

d. An integral test jack for testing the trip unit / breaker via a portable test set shall be provided. To prevent unauthorized changing of breaker settings, a mechanism for sealing the rating plug and the trip unit shall also be supplied.

e. The trip unit shall be equipped with long-life lithium batteries -- with automatic time delay shut-off features -- to provide both programming and observation of trip targets or other functions when the breaker is de-energized.

f. An integral LCD or similar type LED display will allow visual indication of setpoints, status and metering. A button keypad or similar dial-type mechanism shall be used to establish (or change) the protective functions listed below.

g. Adjustable long-time pickup & adjustable long-time delay shall be provided to allow user flexibility of the long time trip rating and lessen the need to change rating plugs to establish the base trip setting. The settings will be based on the value of the rating plug. As a minimum the long-time pickup value range shall be from 0.5 times to 1.0 times the rating plug value with a minimum of 4 long-time time bands.

h. A long-time pickup warning indicator shall be provided to signal that the breaker is approaching an overcurrent situation. As the current in any phase reaches 95% of its setpoint, the word 'PICKUP' shall begin to flash. As current increases, flashing frequency increases, until 100% of the pickup point is reached . At that moment, PICKUP remains ON, continuously, until the long-time delay times out.

i. Adjustable short-time pickup & adjustable short-time delay shall be provided for closer curve shaping ability with downstream devices. These settings will be based on the value established by the rating plug and the long-time pickup setting. As a minimum the short-time pickup value range shall be from 1.5 times to 9.0 times. To better coordinate with either 'step-type' digital breaker devices or 'sloping' thermal-magnetic breakers or fuses, a minimum of 3 short-time I2t -in time bands and 3 short-time I2t -out time bands shall be provided.

j. Adjustable instantaneous pickup shall be provided to accommodate a variety of current inrush situations. These settings will be based on the value of the rating plug. As a minimum the instantaneous pickup value range shall be from 1.5 times to 10.0 times the rating plug value.

k. As indicated on the project drawings; where feeder breakers have an 'LSIG' notation next to the breaker symbol, the 'G' denotes ground-fault protection. Any feeder breaker with the 'G' designation, shall have a trip unit with adjustable ground-fault pickup & adjustable ground-fault delay. These settings will be based on the value established by the internal current sensor ratings of the breaker. As a minimum the ground-fault pickup value range shall be from 0.2 times to a maximum of 1200 amperes. To better coordinate with either 'step-type' devices or 'sloping' devices, a minimum of 3 short-time I2t -in time bands and 3 short-time I2t -out time bands shall be provided.

l. If ground fault protection is shown on the project drawings for feeder beakers, it shall be integral to the breaker trip unit functions and shall be solid state type based on zero sequence functionality. Also the ground fault protective function, shall contain a memory circuit to integrate low level arcing fault currents with time, to sum the intermittent ground fault spikes.

m. Should the supply source be a three-phase / four-wire system, a neutral current sensor must be provided with any feeder breaker equipped with ground fault protection so that a neutral input signal can be provided to the trip unit for proper ground-fault calculations.

n. The trip unit shall be provided with an ammeter, showing the current values using digital numerals. Each phase shall be selectable via a pushbutton or similar device. The display shall scale automatically from Amps (A) to KiloAmps (KA). Should the trip unit not contain an integral ammeter as described above, then a separate ammeter with dedicated CT's, CT shorting blocks and phase selector device shall be provided for each breaker

o. To aid in determining the reason for a circuit breaker trip, display trip targets for long-time, short-time and instantaneous shall be supplied. Additionally, the trip unit shall have an integral, resettable trip counter to record the number of long-time, short-time, and instantaneous trips. If the trip unit is also provided with ground-fault protection, then a display trip target for ground-fault must also be provided as well as the counter to record the number of ground-fault trips.If the trip unit is also provided with ground-fault protection, then a display trip target for ground-fault must also be provided as well as the counter to record the number of ground-fault trips.

2.05 FACTORY INSTALLED MAIN TVSS

There is no requirement for surge suppression devices in the switchboards, as such there are no integral transient voltage surge suppressor (TVSS) / surge protective devices (SPD) are indicated on the project drawings.

2.06 FACTORY INSTALLED MAIN CUSTOMER METER

A. There is no requirement for customer/user metering on the main incoming service, as such there is no customer meter shown on the project drawings.

2.07 FACTORY PROVIDED MAIN UTILITY METERING COMPARTMENT

There is no requirement for a main utility metering compartment on the main incoming service, as such there is no utility metering compartment shown on the project drawings.

2.08 FACTORY PROVIDED MAIN FIRE PUMP TAP COMPARTMENT

There is no requirement for a fire pump tap for the main incoming service, as such there is no fire tap pump compartment shown on the project drawings.

2.09 EQUIPMENT OPTIONS

Furnish nameplates for each circuit breaker in the switchboard lineup. The engraving shall be black lettering with a white background. Use the project one-line diagram and/or switchboard schedule to determine the breaker nameplate engraving.

2.10 ACCESSORIES

Not Applicable – no other accessories are required.

2.11 TESTING

A. Normal factory quality, function and operational testing shall be provided.

PART 3 EXECUTION

3.01 EXAMINATION

A. The following examinations shall be performed by the contractor/installer.

1. Verify that the field measurements of the lineup are the same as shown on the factory drawings.

2. Inspect the General Electric Spectra Series™ Switchboards and confirm that they are ready to be installed.

3. Check concrete pads for uniformity and level surface.

4. Examine the installation area to assure there is enough clearance to install the low voltage switchboards such that they will fit in the allocated space in full compliance with the minimum required clearances recommended by the manufacturer, specified in National Electrical Code and required by any applicable local/facility constraints.

5. Confirm that required utilities are available, in the proper location and ready for use.

Beginning of installation means that the contractor/installer accepts these conditions.

3.02 LOCATION

A. Refer to the projects site layout drawings for details regarding the proper area to place the equipment.

3.03 INSTALLATION

A. The contractor/installer shall furnish and completely install the low voltage switchboards as shown on the factory drawings and per manufacturer's installation instructions. All necessary hardware to secure the equipment in place shall be provided by the contractor/installer.

The contractor/installer shall provide and install any required safety labels.

3.04 FIELD QUALITY CONTROL

A. The following quality control checks shall be performed by the contractor/installer.

1. Inspect the installed switchboards for proper anchoring, alignment and grounding as well as inspecting them for any internal and external physical damage.

2. Confirm that all shipping members have been removed.

3. Check the tightness of all accessible mechanical and electrical connections with a calibrated torque wrench. The minimum acceptable values are specified in the manufacturer's instructions.

4. Refer to manufacturer's instruction books for any other requirements applicable to the switchboard or any factory installed component.

5. Check each electrical bus for proper phasing and identification.

6. Attach a phase rotation meter to the switchboard main bus and observe proper phase sequences.

7. Check and test each breaker for proper mechanical and electrical operation.

8. Check any installed TVSS device.

9. Check any installed digital multifunction meters.

3.05 ADJUSTING

A. The contractor/installer shall adjust all access doors and operating handles for free mechanical and electrical operation as described in the manufacturer's instructions.

B. The contractor/installer shall refer to the manufacturer's instruction book to make adjustments to mechanisms, doors, handles, interlocks, etceteras, as required.

C. The contractor/installer shall set all adjustable protective devices to the values recommend in the coordination study for this project – as provided by Owner. Examples of adjustable protective devices are listed below:

1. Molded case circuit breakers with integral digital solid-state trip units having adjustable instantaneous pickup dials. The proper instantaneous values shall be set for any breakers containing this function.

2. Molded case circuit breakers with integral microprocessor trip units having any of the following adjustable functions: long-time pickup, long-time delay, short-time pickup, short-time delay, instantaneous pickup, ground-fault pickup, and ground-fault. The proper values shall be set for any breakers containing these functions.

3. Insulated case circuit breakers with microprocessor trip units having any of the following adjustable functions: long-time pickup, long-time delay, short-time pickup, short-time delay, instantaneous pickup, ground-fault pickup, and ground-fault. The proper values shall be set for any breakers containing these functions.

D. The contractor/installer shall set any digital multifunction metering devices to the proper amperage (per the installed C/T's), the proper voltage (per the source voltage), the proper phase and wire arrangement (per the source service), etc.

3.06 CLEANING

A. The contractor/installer shall clean the interior and exterior of the switchboard to remove construction debris, dirt, and shipping materials.

B. The contractor/installer shall repaint scratched or marred exterior surfaces to match the original finish.

3.07 TRAINING

Not Applicable – no training on the switchboards is required.

PART 4

4.01 ADDITIONAL NOTES AND REQUIREMENTS

No Main Breaker, Switchboard serves as extension to incoming service.

Breakers rated for 1200amperes to be fully rated

END OF SECTION

ITEM 3 - MICROGRID MOTOR CONTROL CENTER SPECIFICATION

PART 1 GENERAL

1.01 SECTION INCLUDES

A. Low voltage motor control center with back-to-back arrangement and adjustable speed drives with expansion capability for future combination starter units. See drawing E-1.S for Single Line Diagram, Electrical Specification Item #3, for detailed requirements.

1.02 REFERENCE

The equipment and components in this specification shall be designed and manufactured according to latest revision of the following standards (unless otherwise noted).

A. ANSI/NEMA 250, Enclosures for Electrical Equipment (1000 Volts Maximum)

B. ANSI/NFPA 70, National Electrical Code

C. CSA C22.2 No. 0, General Requirements of Canadian Electrical Code, Part II

D. CSA C22.2 No. 14, Industrial Control Equipment

E. MIL SPEC TT-C-490, Rev. D, Cleaning Methods for Ferrous Surfaces and Pretreatment for Organic Coatings

F. NEMA ICS 1, Industrial Control and Systems: General Requirements

G. NEMA ICS 2, Industrial Control and Systems: Controllers, Contactors and Overload Relays, Rated Not More Than 2000 Volts AC or 750 Volts DC

H. NEMA ICS 6, Industrial Control and Systems: Enclosures

I. NEMA ST 20, Dry Type Transformers for General Applications

J. UL 508, Industrial Control Equipment (only for devices included in specification)

K. UL 845, Motor Control Centers

1.03 DEFINITIONS

1.04 SYSTEM DESCRIPTION

A. [480] volt, three phase, [3] wire, [60] Hertz power system having a short circuit availability of [65] ~~[100]~~ kiloamperes RMS symmetrical.

B. Wiring shall be NEMA Class [I] [II], Type [A] [BD] [BT] [C]. Where Type C wiring is required, the master terminal blocks shall be located at the [top] [bottom] of the vertical section. Combination starter units shall be wired out to split type terminal blocks for easy removal of the starter unit without disturbing either factory or field installed wiring. All control terminal boards shall be accessible from the front.

C. This single, back-to-back, vertical structure shall be designed for the future addition of equally sized vertical units to the left side (facing front.)

1.05 SUBMITTALS

A. Manufacturer shall provide [3] copies of the following documents to owner for review and evaluation in accordance with general requirements of Division [1] [01] and Division [16] [26]:

1. Product Data on specified product;

2. Shop Drawings on specified product;

3. Trip curves for each specified product.

1.06 INSTALLATION, OPERATION AND MAINTENANCE DATA

A. Manufacturer shall provide [3] copies of installation, operation and maintenance procedures to owner in accordance with general requirements of Division [1] [01] and Division [16] [26].

1.07 QUALITY ASSURANCE (QUALIFICATIONS)

A. Manufacturer shall have specialized in the manufacture and assembly of low voltage motor control centers for [25] years.

B. Low voltage motor control centers shall be listed and/or classified by Underwriters Laboratories in accordance with standards listed in Article 1.03 of this specification.

C. Vertical sections and individual units shall be UL Labeled where possible.

D. Motor control centers shall be qualified for use in seismic areas as follows:

1. High seismic loading as defined in IEEE Std 693-1997, with 1.3 amplification factor .

2. IBC-2003, Sds = 1.0g, Ss = 150%, Ip = 1.5, for all z/h greater than 0 and Sds = 1.6g, Ss = 240%, Ip = 1.5, for z/h equal to 0 in accordance with ICC-ES-AC156.

3. Seismic compliance shall be qualified only through shake table testing. Compliance by calculation is not acceptable.

1.08 DELIVERY, STORAGE, AND HANDLING

A. Contractor shall store, protect, and handle products in accordance with recommended practices listed in manufacturer's Installation and Maintenance Manuals.

B. Ship up to three motor control sections in individual shipping splits for ease of handling. Each shipping split shall be mounted on shipping skids and wrapped for protection.

C. Contractor shall inspect and report concealed damage to carrier within 48 hours.

D. Contractor shall store in a clean, dry space. Cover with heavy canvas or plastic to keep out dirt, water, construction debris, and traffic. Heat enclosures to prevent condensation.

E. Contractor shall handle in accordance with manufacturer's recommendations to avoid damaging equipment, installed devices, and finish. [Lift only by installed lifting eyes.]

1.09 PROJECT CONDITIONS (SITE ENVIRONMENTAL CONDITIONS)

A. Follow (standards) service conditions before, during and after switchboard installation.

B. Motor control centers shall be located in well - ventilated areas, free from excess humidity, dust and dirt and away from hazardous materials. Ambient temperature of area will be between minus 30 and plus 25 degrees C. Indoor locations shall be protected to prevent moisture from entering enclosure.

1.10 WARRANTY

A. Manufacturer warrants equipment to be free from defects in materials and workmanship for 1 year from date of installation or 18 months from date of purchase, whichever occurs first.

1.11 FIELD MEASUREMENTS

A. Contractor shall make all necessary field measurements to verify that equipment shall fit in allocated space in full compliance with minimum required clearances specified in National Electrical Code.

PART 2 PRODUCTS

2.01 MANUFACTURER

A. General Electric Company products have been used as the basis for design. Other manufacturers' products of equivalent quality, dimensions and operating features may be acceptable, at the Engineer's discretion, if they comply with all requirements specified or indicated in these Contract documents.

2.02 EQUIPMENT

A. Furnish GE Evolution E9000 (or approved equal). Owner will consider Eaton, Schneider.

2.03 COMPONENTS

A. Refer to Contract Drawings for actual layout and location of equipment and components; current ratings of devices, bus bars, and components; voltage ratings of devices, components and assemblies; interrupting and withstand ratings of devices, buses, and components; and other required details.

B. Structure

1. Indoor enclosures shall be NEMA Type [1-Gasketed] ~~[2] [12 Industrial].~~ Indoor enclosures shall be suitable for back to back unit mounting. For back-to-back mounting, a separate vertical bus assembly for the rear units shall be used.

~~2. Outdoor enclosures, where indicated on drawings, shall be NEMA [3R Non-Walk-In] or [3R Walk-in].~~

3. Each motor control center shall consist of the required number of vertical sections of heavy gauge sheet steel bolted together to form a rigid self-supporting assembly. A removable lifting angle shall be mounted to the motor control center at the top. Removable bottom channel sills shall be mounted front and rear of the vertical sections and shall extend the width of the lineup.

4. Vertical sections shall be nominally 90-inch high, 20-inch wide and with the back-to-back unit mounting 21-inches deep. ~~Alternate section height shall be 78" or 66~~". ~~Alternate section widths shall be 24-inches or 30-inches wide when required.~~

C. Wireways

1. Each vertical section shall contain a minimum 9-inch high top horizontal wireway and a 6-9"bottom wireway. When loads exit the bottom a 12" bottom wireway shall be provided. A removable hinged door shall cover the horizontal wireway.

2. A separate vertical wiring trough shall be furnished in each vertical section adjacent to plug-in unit. The wire trough shall permit the installation of field wiring and shall isolate this wiring from the adjacent unit. No terminal blocks shall be located in the vertical wireway.

3. Cable tie supports shall be furnished in the vertical wireway to hold cable and wiring in place. A removable hinged door shall cover the vertical wiring trough.

4. [A low-level signal raceway shall be provided within the vertical wiring trough.]

D. Incoming Power / Main Protective Device

1. Incoming power to the motor control center shall be [cable] [~~bus duct].~~

   a. [Incoming power cables shall enter the ~~[top]~~ [bottom] of the motor control center.] [Incoming cables shall be of the size and number shown on the plans.]

   ~~b. [Incoming bus duct shall enter the top of the motor control center and shall have a current rating as shown on the plans.]~~

~~2. The main protective device shall be a [molded case circuit breaker] [insulated case circuit breaker] [fused switch]. The main device shall be of the ampere rating shown on the plans and shall have an interrupting rating equal to or greater than the available short circuit current.~~

E. Bus System

1. Power shall be distributed by means of a continuous horizontal bus with a current rating of [600] [~~800] [1200] [1600] [2000] [2500~~] amperes.

2. The main bus shall be [tin-plated .0003 micro inch thick] [standard silver-plated .0002 micro inch] or [heavy silver-plated .005 micro inch] copper.

3. The main bus shall be braced for [65,000][~~100,000]~~ amperes RMS symmetrical.

4. The main bus shall be isolated by barriers from wire troughs, starters, and other areas.

5. There shall be double bolt connections on main bus joints and splice connections. Main bus splicing between shipping splits shall be accomplished from the front with no structural disassembly.

6. The main bus shall be fully rated and arranged for future extension.

7. The vertical bus in each section shall be rated [300] [~~600] [850]*~~amperes and shall be [tin-plated] [silver-plated].

SPECIFIER NOTE: 850A vertical bus available on 1200A main bus or greater)

8. The vertical bus shall have a flame-retardant white polyester-glass insulation / isolation system. This system shall insulate the vertical bus front and rear. In addition, the barrier shall isolate each phase bus. Openings in the vertical bus insulation/isolation system shall permit the entry of unit stabs. Unused openings shall have plugs or covers to prevent the entry of foreign objects.

9. [The openings in the vertical bus used for starter connections shall be covered by an automatic shutter mechanism. The shutters shall automatically cover the openings when the starter is removed.]

10. The vertical bus shall be braced the same as the main horizontal bus.

11. A copper ground bus shall extend the full width of the motor control center. The ground bus shall be rated [~~300]~~ [600] amperes. The ground bus shall be drilled and lugs furnished as specified.

12. [There shall be a vertical copper ground bus in each section. The ground bus shall be accessible to a bus stab mounted in the unit compartment area and arranged so that the unit ground stab engages before the power stabs engage the vertical bus.] [A motor Load ground lug shall be mounted in the unit and used for terminating the ground of multi-conductor cables.]

13. ~~A neutral bus shall be furnished when shown on the plans. [incoming section only] [full-width of line up] The neutral bus shall be [300][600] [800] [1200] [1600] [2000] [2500] amperes. Lugs of the proper ampacity shall be furnished~~.

F. Units

1. Combination motor controller and feeder units shall employ [molded case circuit breakers] [~~fusible switches with clips for [J or R type fuses]~~ for branch circuit protection. Circuit breaker disconnects for combination motor starters shall be [thermal-magnetic~~] [magnetic only].~~

2. All combination starter and feeder units of plug-in construction shall utilize a positive guidance system to insure positive connection of the unit stabs to the section vertical bus. Insertion and removal of each unit shall not require the use of special tools.

3. Unit shelves shall be of a lift out design, so that the shelf may be removed without the use of special tools.

4. Connection from the power stabs to the unit disconnect shall be a direct connection.

5. Each circuit breaker starter unit size 1 through size 5 shall be of plug-in construction. Each feeder breaker rated 600A or less shall be plug-in construction.

6. Each unit compartment shall be equipped with a flange-formed pan type door. The door shall be mounted on the vertical section with removable hinge pins.

7. Each unit shall be equipped with an operating handle. The handle shall be connected to the disconnect operator using a direct drive and requiring no adjustments of linkage.

8. The handle shall be mechanically interlocked with the door preventing it from opening with disconnect closed. The interlock shall also prevent disconnect being closed with door open. The interlock shall be capable of being defeated allowing the door to be opened with disconnect closed or disconnect closed with the door open.

9. The unit handle shall have provision for up to three padlocks in the off position. On circuit breaker units the handle shall have a "tripped" position in addition to OFF/ ON.

10. Each unit shall be capable of being padlocked in a partially withdrawn position. In this position, the unit power stabs are disengaged from the vertical bus and no power can enter the unit.

11. Combination starter units specified with Type B or C wiring shall be supplied with split-type control terminal blocks. The terminal blocks shall be front mounted and shall allow the removal of the unit without disconnecting any of the control wiring. Combination starter units up to size 5 shall be plug-in construction and shall be capable of being removed without disconnecting any control leads from their terminal blocks.

12. Overload relays shall be: {select one}

    ~~a. [Bimetallic, non-ambient compensated]~~

    b. [Bimetallic, ambient compensated]

~~c. [Solid-state, ambient insensitive, self powered, including adjustable FLA, adjustable phase unbalance, phase loss protection, selectable overload class (10, 20, 30) with 2% accuracy and repeatability, built-in thermal memory to prevent hot motor starts, isolated 1NO and 1 NC auxiliary contacts.]~~

~~d. [Advanced microprocessor based motor protection as described in paragraph 2.03.G.]~~

13. Control power for starter units shall be from: {select one}

    a. [Individual control power transformers furnished in each starter unit. One secondary lead shall be furnished with a fuse and the other lead shall be grounded. Control power primary fuses are required].

    ~~b. [Line voltage. Control circuits on all starter units with line voltage control power shall be provided with current limiting fuses mounted in both legs of the control circuit].~~

    ~~c. [A separate source (common control) Two wired terminal points shall be provided. One leg shall be wired thou normally open auxiliary contacts in each disconnect and a control power fuse rated 1 amp shall be provided.~~

14. -Starter units shall be provided with the following auxiliary devices:

    a. [auxiliary starter interlocks, 2_ N/O, 2 N/C].

    b. [control / timing relays (as shown on the drawings)].

    c. [door mounted pilot devices:

        (1) start-stop pushbutton

        (2) H-O-A selector switch

        (3) Indicating lights (quantity and color)].

G. Motor Management Relays

1. Motor management shall be provided using a relay with complete protection, metering, and monitoring functions. The relay may be applied on induction motors from 200V to 7.2KV @ 60 Hz from 1 to 800 FLA

2. The protection functions shall include selectable overcurrent Class 10, 15, 20, & 30, adjustable current unbalance, Zero Sequence ground fault if specified on drawings, fixed over/under-voltage, adjustable Stall & Jam, selectable Load & Power Loss, auxiliary sense failure, stop motor and record event upon failure of an auxiliary device to change state upon command.

3. Monitoring and metering functions shall include:

   a. Phase current, each phase and ground; average current; % current unbalance; voltage; power factor, three-phase power, elapsed motor hours.

   b. Non-volatile memory that can store up to 10 trip events.

4. Control functions shall include:

   a. Four output contacts with NEMA C150 pilot duty ratings. Two NO contacts shall be used to control motor contactors, one form-C contact shall be used to annunciate ground fault status as shown on drawings, and one form-C contact shall be used for programmable fault status indications.

   b. Six digital inputs for the following: Run 1, Run 2, Stop, Trip, Operation Mode, Reset.

   c. Power Loss auto restart. Upon power loss, the relay will record a power loss fault as well as latest motor condition and parameter settings. The relay shall have the ability to restart after a 4 second or less power outage.

5. The Motor Protective relay shall include the following user interfaces:

   a. Front mounted LED’s indicators shall indicate module status, network status, overcurrent pickup, ground fault pickup and current unbalance pickup.

   b. Dip-switch configuration for overload trip class (10, 15, 20, 30), DeviceNet MAC ID, and Baud Rate. Software shall not be required for configuring these values.

   c. DeviceNet communications using a standard 5-pin sealed micro style (female) connector.

   d. An RS232 port, using an RJ11, on relay shall be provided for PC or Display device to access the settings and following data:

      (1) Phase Currents

(2) Average Phase Current

(3) Line Voltage

(4) KW

(5) Power Factor

(6) Elapse Time

(7) Trip record of last 10 events

(8) Address (MAC ID)

(9) Trip Class

(10) Baud rate

e. Programming and Display Unit (PDU)

(1) PDU shall have capability to configure the relay, display faults and all monitored parameters.

(2) PDU shall have a 4-line by 16 character LCD display and control keys.

(3) LED indicators on the PDU shall indicate control power availability and fault status.

f. EnerVista compatible Windows® based PC software which enables setpoint programming, file storage, on-line help, and real time display of status and measured data.

H. Miscellaneous Units:

The following units shall be included in the motor control center(s) as indicated on the drawings:

~~1. [lighting and Power transformers]~~

~~2. [lighting panelboards]~~

~~3. [Power metering and associated instrument transformers, where required]~~

~~4. [power factor correction capacitors].~~

~~5. [Reduced Voltage Solid State]~~

6. [Variable Frequency Drives]

~~7. [PLC'S]~~

2.04 FINISH

A. The Motor Control Center steel parts shall be cleaned and sprayed in controlled cleaning solutions by a 7-stage spray washer. The operation shall produce an iron phosphate coating of a minimum of 150 milligrams per square foot to meet MIL Specification TT-C-490. The primed metal parts shall be electrostatically coated with powder paint consisting of 670-011 ANSI-61 Acrylic Paint (Light Gray) with a gloss of 60 plus or minus 5 and thickness of 2.5 mils. The paint finish shall withstand a minimum of 1000 hours salt spray test.

2.05 TESTING

Electrical tests before shipment shall include:

A. Power circuit phasing

B. Control circuit wiring

C. Instrument transformers

D. Meters

E. Device electrical operation

F. AC Dielectric tests (per NEMA ICS 1-109-21) of:

G. Power circuits

H. Control circuits

PART 3 EXECUTION

3.01 EXAMINATION

A. The following procedures shall be performed by the Contractor.

1. Examine installation area to assure there is enough clearance to install switchboard.

2. Check concrete pads for uniformity and level surface.

3. Verify that equipment is ready to install.

4. Verify field measurements are as [{shown on Drawings] [instructed by manufacturer}].

5. Verify that required utilities are available, in proper location and ready for use.

6. Beginning of installation means installer accepts conditions.

3.02 LOCATION

3.03 INSTALLATION

Additional provisions and editing may be required for this part.

A. Installation shall be performed by the Contractor.

1. Install per manufacturer's instructions.

2. Install required safety labels.

3.04 FIELD QUALITY CONTROL N/A

3.05 ADJUSTING N/A

3.06 CLEANING N/A

END OF SECTION

ITEM 4 -GENERATOR SWITCHBOARD MOTOR CONTROL CENTER SPECIFICATION

PART 1 GENERAL

1.01 SECTION INCLUDES

A. Low voltage motor control centers with combination starter units. See drawing E-1.S for Single Line Diagram, Electrical Specification Item #4, for detailed requirements.

1.02 REFERENCE

The equipment and components in this specification shall be designed and manufactured according to latest revision of the following standards (unless otherwise noted).

A. ANSI/NEMA 250, Enclosures for Electrical Equipment (1000 Volts Maximum)

B. ANSI/NFPA 70, National Electrical Code

C. CSA C22.2 No. 0, General Requirements of Canadian Electrical Code, Part II

D. CSA C22.2 No. 14, Industrial Control Equipment

E. MIL SPEC TT-C-490, Rev. D, Cleaning Methods for Ferrous Surfaces and Pretreatment for Organic Coatings

F. NEMA ICS 1, Industrial Control and Systems: General Requirements

G. NEMA ICS 2, Industrial Control and Systems: Controllers, Contactors and Overload Relays, Rated Not More Than 2000 Volts AC or 750 Volts DC

H. NEMA ICS 6, Industrial Control and Systems: Enclosures

I. NEMA ST 20, Dry Type Transformers for General Applications

J. UL 508, Industrial Control Equipment (only for devices included in specification)

K. UL 845, Motor Control Centers

1.03 DEFINITIONS

1.04 SYSTEM DESCRIPTION

A. [480] volt, three phase, [4] wire, [60] Hertz power system having a short circuit availability of [65] ~~[100]~~ kiloamperes RMS symmetrical.

B. Wiring shall be NEMA Class [I] [II], Type [A] [BD] [BT] [C]. Where Type C wiring is required, the master terminal blocks shall be located at the [top] [bottom] of the vertical section. Combination starter units shall be wired out to split type terminal blocks for easy removal of the starter unit with out disturbing either factory or field installed wiring. All control terminal boards shall be accessible from the front.

1.05 SUBMITTALS

A. Manufacturer shall provide [3] copies of the following documents to owner for review and evaluation in accordance with general requirements of Division [1] [01] and Division [16] [26]:

1. Product Data on specified product;

2. Shop Drawings on specified product;

3. Trip curves for each specified product.

1.06 INSTALLATION, OPERATION AND MAINTENANCE DATA

A. Manufacturer shall provide [3] copies of installation, operation and maintenance procedures to owner in accordance with general requirements of Division [1] [01] and Division [16] [26].

1.07 QUALITY ASSURANCE (QUALIFICATIONS)

A. Manufacturer shall have specialized in the manufacture and assembly of low voltage motor control centers for [25] years.

B. Low voltage motor control centers shall be listed and/or classified by Underwriters Laboratories in accordance with standards listed in Article 1.03 of this specification.

C. Vertical sections and individual units shall be UL Labeled where possible.

D. Motor control centers shall be qualified for use in seismic areas as follows:

1. High seismic loading as defined in IEEE Std 693-1997, with 1.3 amplification factor .

2. IBC-2003, Sds = 1.0g, Ss = 150%, Ip = 1.5, for all z/h greater than 0 and Sds = 1.6g, Ss = 240%, Ip = 1.5, for z/h equal to 0 in accordance with ICC-ES-AC156.

3. Seismic compliance shall be qualified only through shake table testing. Compliance by calculation is not acceptable.

1.08 DELIVERY, STORAGE, AND HANDLING

A. Contractor shall store, protect, and handle products in accordance with recommended practices listed in manufacturer's Installation and Maintenance Manuals.

B. Ship up to three motor control sections in individual shipping splits for ease of handling. Each shipping split shall be mounted on shipping skids and wrapped for protection.

C. Contractor shall inspect and report concealed damage to carrier within 48 hours.

D. Contractor shall store in a clean, dry space. Cover with heavy canvas or plastic to keep out dirt, water, construction debris, and traffic. Heat enclosures to prevent condensation.

E. Contractor shall handle in accordance with manufacturer's recommendations to avoid damaging equipment, installed devices, and finish. [Lift only by installed lifting eyes.]

1.09 PROJECT CONDITIONS (SITE ENVIRONMENTAL CONDITIONS)

A. Follow (standards) service conditions before, during and after switchboard installation.

B. Motor control centers shall be located in well - ventilated areas, free from excess humidity, dust and dirt and away from hazardous materials. Ambient temperature of area will be between minus 30 and plus 25 degrees C. Indoor locations shall be protected to prevent moisture from entering enclosure.

1.10 WARRANTY

A. Manufacturer warrants equipment to be free from defects in materials and workmanship for 1 year from date of installation or 18 months from date of purchase, whichever occurs first.

1.11 FIELD MEASUREMENTS

A. Contractor shall make all necessary field measurements to verify that equipment shall fit in allocated space in full compliance with minimum required clearances specified in National Electrical Code.

PART 2 PRODUCTS

2.01 MANUFACTURER

A. General Electric Company products have been used as the basis for design. Other manufacturers' products of equivalent quality, dimensions and operating features may be acceptable, at the Engineer's discretion, if they comply with all requirements specified or indicated in these Contract documents.

2.02 EQUIPMENT

A. Furnish GE Evolution E9000 (or approved equal). Owner will consider Eaton, Schneider.

2.03 COMPONENTS

A. Refer to Contract Drawings for actual layout and location of equipment and components; current ratings of devices, bus bars, and components; voltage ratings of devices, components and assemblies; interrupting and withstand ratings of devices, buses, and components; and other required details.

B. Structure

1. ~~Indoor enclosures shall be NEMA Type [1-Gasketed] [2] [12 Industrial]. Indoor enclosures shall be suitable for front mounting~~.

2. Outdoor enclosures, where indicated on drawings, shall be NEMA [3R Non-Walk-In] ~~or [3R Walk-in].~~

3. Each motor control center shall consist of the required number of vertical sections of heavy gauge sheet steel bolted together to form a rigid self-supporting assembly. A removable lifting angle shall be mounted to the motor control center at the top. Removable bottom channel sills shall be mounted front and rear of the vertical sections and shall extend the width of the lineup.

4. Vertical sections shall be nominally 90-inch high and 20-inch wide and 21 inches deep. ~~Alternate section height shall be 78" or 66". Alternate section widths shall be 24-inches or 30-inches wide when required~~.

C. Wireways

1. Each vertical section shall contain a minimum 9-inch high top horizontal wireway and a 6-9"bottom wireway. When loads exit the bottom a 12" bottom wireway shall be provided. A removable hinged door shall cover the horizontal wireway.

2. A separate vertical wiring trough shall be furnished in each vertical section adjacent to plug-in unit. The wire trough shall permit the installation of field wiring and shall isolate this wiring from the adjacent unit. No terminal blocks shall be located in the vertical wireway.

3. Cable tie supports shall be furnished in the vertical wireway to hold cable and wiring in place. A removable hinged door shall cover the vertical wiring trough.

4. [A low-level signal raceway shall be provided within the vertical wiring trough.]

D. Incoming Power / Main Protective Device

1. Incoming power to the motor control center shall be [cable] [bus duct].

a. [Incoming power cables shall enter the ~~[top]~~ [bottom] of the motor control center.] [Incoming cables shall be of the size and number shown on the plans.]

~~b. [Incoming bus duct shall enter the top of the motor control center and shall have a current rating as shown on the plans.]~~

2. The main protective device shall be a [molded case circuit breaker] ~~[insulated case circuit breaker] [fused switch~~]. The main device shall be of the ampere rating shown on the plans and shall have an interrupting rating equal to or greater than the available short circuit current.

E. Bus System

1. Power shall be distributed by means of a continuous horizontal bus with a current rating of ~~[600] [800]~~ [1200] [~~1600] [2000] [2500]~~ amperes.

2. The main bus shall be [tin-plated .0003 micro inch thick] [standard silver-plated .0002 micro inch] or [heavy silver-plated .005 micro inch] copper.

3. The main bus shall be braced for [65,000][~~100,000]~~ amperes RMS symmetrical.

4. The main bus shall be isolated by barriers from wire troughs, starters, and other areas.

5. There shall be double bolt connections on main bus joints and splice connections. Main bus splicing between shipping splits shall be accomplished from the front with no structural disassembly.

6. The main bus shall be fully rated and arranged for future extension.

7. The vertical bus in each section shall be rated [~~300]~~ [600] ~~[850]*~~amperes and shall be [tin-plated] [silver-plated].

SPECIFIER NOTE: 850A vertical bus available on 1200A main bus or greater)

8. The vertical bus shall have a flame-retardant white polyester-glass insulation / isolation system. This system shall insulate the vertical bus front and rear. In addition, the barrier shall isolate each phase bus. Openings in the vertical bus insulation/isolation system shall permit the entry of unit stabs. Unused openings shall have plugs or covers to prevent the entry of foreign objects.

9. [The openings in the vertical bus used for starter connections shall be covered by an automatic shutter mechanism. The shutters shall automatically cover the openings when the starter is removed.]

10. The vertical bus shall be braced the same as the main horizontal bus.

11. A copper ground bus shall extend the full width of the motor control center. The ground bus shall be rated [~~300]~~ [600] amperes. The ground bus shall be drilled and lugs furnished as specified.

12. [There shall be a vertical copper ground bus in each section. The ground bus shall be accessible to a bus stab mounted in the unit compartment area and arranged so that the unit ground stab engages before the power stabs engage the vertical bus.] [A motor Load ground lug shall be mounted in the unit and used for terminating the ground of multi-conductor cables.]

13. A neutral bus shall be furnished when shown on the plans. [incoming section only] [full-width of line up] The neutral bus shall be ~~[300][600] [800]~~ [1200] ~~[1600] [2000] [2500]~~ amperes. Lugs of the proper ampacity shall be furnished.

F. Units

1. Combination motor controller and feeder units shall employ [molded case circuit breakers] [~~fusible switches with clips for [J or R type fuses~~] for branch circuit protection. Circuit breaker disconnects for combination motor starters shall be [thermal-magnetic] ~~[magnetic only].~~

2. All combination starter and feeder units of plug-in construction shall utilize a positive guidance system to insure positive connection of the unit stabs to the section vertical bus. Insertion and removal of each unit shall not require the use of special tools.

3. Unit shelves shall be of a lift out design, so that the shelf may be removed without the use of special tools.

4. Connection from the power stabs to the unit disconnect shall be a direct connection.

5. Each circuit breaker starter unit size 1 through size 5 shall be of plug-in construction. Each feeder breaker rated 600A or less shall be plug-in construction.

6. Each unit compartment shall be equipped with a flange-formed pan type door. The door shall be mounted on the vertical section with removable hinge pins.

7. Each unit shall be equipped with an operating handle. The handle shall be connected to the disconnect operator using a direct drive and requiring no adjustments of linkage.

8. The handle shall be mechanically interlocked with the door preventing it from opening with disconnect closed. The interlock shall also prevent disconnect being closed with door open. The interlock shall be capable of being defeated allowing the door to be opened with disconnect closed or disconnect closed with the door open.

9. The unit handle shall have provision for up to three padlocks in the off position. On circuit breaker units the handle shall have a "tripped" position in addition to OFF/ ON.

10. Each unit shall be capable of being padlocked in a partially withdrawn position. In this position, the unit power stabs are disengaged from the vertical bus and no power can enter the unit.

11. Combination starter units specified with Type B or C wiring shall be supplied with split-type control terminal blocks. The terminal blocks shall be front mounted and shall allow the removal of the unit without disconnecting any of the control wiring. Combination starter units up to size 5 shall be plug-in construction and shall be capable of being removed without disconnecting any control leads from their terminal blocks.

12. Overload relays shall be: {select one}

    ~~a. [Bimetallic, non-ambient compensated]~~

    b. [Bimetallic, ambient compensated]

    ~~c. [Solid-state, ambient insensitive, self powered, including adjustable FLA, adjustable phase unbalance, phase loss protection, selectable overload class (10, 20, 30) with 2%~~

~~accuracy and repeatability, built-in thermal memory to prevent hot motor starts, isolated 1NO and 1 NC auxiliary contacts.]~~

~~d. [Advanced microprocessor based motor protection as described in paragraph 2.03.G.]~~

13. Control power for starter units shall be from: {select one}

    a. [Individual control power transformers furnished in each starter unit. One secondary lead shall be furnished with a fuse and the other lead shall be grounded. Control power primary fuses are required].

    ~~b. [Line voltage. Control circuits on all starter units with line voltage control power shall be provided with current limiting fuses mounted in both legs of the control circuit].~~

    ~~c. [A separate source (common control) Two wired terminal points shall be provided. One leg shall be wired thou normally open auxiliary contacts in each disconnect and a control power fuse rated 1 amp shall be provided.~~

14. Starter units shall be provided with the following auxiliary devices:

    a. [auxiliary starter interlocks, 2_ N/O, 2 N/C].

    b. [control / timing relays (as shown on the drawings)].

    c. [door mounted pilot devices:

        (1) start-stop pushbutton

        (2) H-O-A selector switch

        (3) Indicating lights (quantity and color)].

G. Motor Management Relays

1. Motor management shall be provided using a relay with complete protection, metering, and monitoring functions. The relay may be applied on induction motors from 200V to 7.2KV @ 60 Hz from 1 to 800 FLA

2. The protection functions shall include selectable overcurrent Class 10, 15, 20, & 30, adjustable current unbalance, Zero Sequence ground fault if specified on drawings, fixed over/under-voltage, adjustable Stall & Jam, selectable Load & Power Loss, auxiliary sense failure, stop motor and record event upon failure of an auxiliary device to change state upon command.

3. Monitoring and metering functions shall include:

    a. Phase current, each phase and ground; average current; % current unbalance; voltage; power factor, three-phase power, elapsed motor hours.

b. Non-volatile memory that can store up to 10 trip events.

4. Control functions shall include:

a. Four output contacts with NEMA C150 pilot duty ratings. Two NO contacts shall be used to control motor contactors, one form-C contact shall be used to annunciate ground fault status as shown on drawings, and one form-C contact shall be used for programmable fault status indications.

b. Six digital inputs for the following: Run 1, Run 2, Stop, Trip, Operation Mode, Reset.

c. Power Loss auto restart. Upon power loss, the relay will record a power loss fault as well as latest motor condition and parameter settings. The relay shall have the ability to restart after a 4 second or less power outage.

5. The Motor Protective relay shall include the following user interfaces:

a. Front mounted LED's indicators shall indicate module status, network status, overcurrent pickup, ground fault pickup and current unbalance pickup.

b. Dip-switch configuration for overload trip class (10, 15, 20, 30), DeviceNet MAC ID, and Baud Rate. Software shall not be required for configuring these values.

c. DeviceNet communications using a standard 5-pin sealed micro style (female) connector.

d. An RS232 port, using an RJ11, on relay shall be provided for PC or Display device to access the settings and following data:

(1) Phase Currents

(2) Average Phase Current

(3) Line Voltage

(4) KW

(5) Power Factor

(6) Elapse Time

(7) Trip record of last 10 events

(8) Address (MAC ID)

(9) Trip Class

(10) Baud rate

e. Programming and Display Unit (PDU)

(1) PDU shall have capability to configure the relay, display faults and all monitored parameters.

(2) PDU shall have a 4-line by 16 character LCD display and control keys.

(3) LED indicators on the PDU shall indicate control power availability and fault status.

f. EnerVista compatible Windows® based PC software which enables setpoint programming, file storage, on-line help, and real time display of status and measured data.

H. Miscellaneous Units:

The following units shall be included in the motor control center(s) as indicated on the drawings:

1. [lighting and Power transformers]

2. [lighting panelboards]

~~3. [Power metering and associated instrument transformers, where required]~~

~~4. [power factor correction capacitors].~~

~~5. [Reduced Voltage Solid State]~~

~~6. [Variable Frequency Drives]~~

~~7. [PLC'S]~~

2.04 FINISH

A. The Motor Control Center steel parts shall be cleaned and sprayed in controlled cleaning solutions by a 7-stage spray washer. The operation shall produce an iron phosphate coating of a minimum of 150 milligrams per square foot to meet MIL Specification TT-C-490. The primed metal parts shall be electrostatically coated with powder paint consisting of 670-011 ANSI-61 Acrylic Paint (Light Gray) with a gloss of 60 plus or minus 5 and thickness of 2.5 mils. The paint finish shall withstand a minimum of 1000 hours salt spray test.

2.05 TESTING

Electrical tests before shipment shall include:

A. Power circuit phasing

B. Control circuit wiring

C. Instrument transformers

D. Meters

E. Device electrical operation

F. AC Dielectric tests (per NEMA ICS 1-109-21) of:

G. Power circuits

H. Control circuits

PART 3 EXECUTION

3.01 EXAMINATION

A. The following procedures shall be performed by the Contractor.

1. Examine installation area to assure there is enough clearance to install switchboard.

2. Check concrete pads for uniformity and level surface.

3. Verify that equipment is ready to install.

4. Verify field measurements are as [{shown on Drawings] [instructed by manufacturer}].

5. Verify that required utilities are available, in proper location and ready for use.

6. Beginning of installation means installer accepts conditions.

3.02 LOCATION

3.03 3.03 INSTALLATION

Additional provisions and editing may be required for this part.

A. Installation shall be performed by the Contractor.

1. Install per manufacturer's instructions.

2. Install required safety labels.

3.04 FIELD QUALITY CONTROL N/A

3.05 ADJUSTING N/A

3.06 CLEANING N/A

END OF SECTION

ELECTRICAL ABBREVIATIONS

A	AMPERES
AF	AMPERE FRAME
AT	AMPERE TRIP
AIC	AMPS INTERRUPTING CAPACITY
AFF	ABOVE FINISHED FLOOR
BC	BARE COPPER
B	BOTTOM
BLKG	BLOCKING
BLDG	BUILDING
BRKR	BREAKER
CKT	CIRCUIT
COND	CONDUCTOR
C	CONDUIT, CENTIGRADE
CO	CONDUIT ONLY
CU	COPPER
DETL	DETAIL
DISC	DISCONNECT
DWG	DRAWING
ELEV	ELEVATION
EMERG	EMERGENCY
EP	EARTHING POINT
E.P.O	EMERGENCY POWER OFF
EXISTG, E	EXISTING
FA	FIRE ALARM
FLEX	FLEXIBLE
FLUOR	FLUORESCENT
FUT.	FUTURE
GEN	GENERATOR
GND	GROUND
GFI	GROUND FAULT INTERRUPTER
HZ	HERTZ
HP	HORSE POWER
INCAND	INCANDESCENT
JB	JUNCTION BOX
KVA	KILOVOLT-AMPERES
KV	KILOVOLT
KW	KILOWATT
LCL	LONG CONTINUOUS LOAD
LTS	LIGHTING, LIGHTS
M	METER
MTG	MOUNTING
NIC	NOT IN CONTACT
NTS	NOT TO SCALE
OH, O/H	OVERHEAD
OFCI	OWNER FURNISHED, CONTRACTOR INSTALLED
PNL	PANEL
RECP	RECEPTACLE
REF	REFERENCE
SEC	SECONDARY, SECOND
SHT	SHEET
SP	SPARE
SPECS	SPECIFICATIONS
STD	STANDARD
SW	SWITCH
SWBD	SWITCHBOARD
XFMR	TRANSFORMER
TYP	TYPICAL
UG, U/G	UNDERGROUND
UON	UNLESS OTHERWISE NOTED
V	VOLT
VA	VOLT-AMPERES
VL	VERIFY LOCATION
Vm	VOLTMETER
VA	VOLT-AMPERES
W	WATTS, WIRE, WIDTH
WP	WEATHERPROOF

ELECTRICAL SYMBOLS LIST

DETAIL NUMBER / DRAWING NUMBER	DETAIL CALLOUT
XX	SHEET NOTE CALLOUT NUMERAL AND/OR LETTER WITHIN HEXIGON IS NOTE IDENTIFICATION
	TERMINAL CABINET AS NOTED ON PLAN DRAWING
	BACKBOARD SIZE AS INDICATED
	CONDUIT RUN IN WALL OR CEILING
	CONDUIT RUN IN FLOOR OR UNDERGROUND
	CONDUIT RUN STUBBED AND CAPPED(IF DESIGNATED AS SPARE)
	CONDUIT RISE
	CONDUIT DROP
	U/G GROUND CONDUCTOR
	HASH MARKS INDICATE QUANTITY OF WIRES NO HASH MARKS INDICATE 2 #12 IN 1/2" C
??	JUNCTION BOX OUTLET. BLANK COVER PLATE WALL MOUNTED
A-1,3	HOMERUN TO PANEL "A" W/3 #12 WIRES CONNECTED TO CIRCUIT #1 & #3.
a, b, c	SINGLE POLE TOGGLE SWITCH MOUNTED +42", SUBSCRIPTS INDICATE QUANTITY OF SWITCHES AND OUTLETS CONTROLLED.
K	KEY OPERATED WALL MOUNTED SWITCH +42".
2	MULTIPLE WAY SWITCH, SWITCHES 2, 3, OR 4 INDICATES NUMBER OF WAYS +42".
T	ROTARY TIME SWITCH +42".
	277/480V, 3ø, 4W ELECTRICAL PANEL SURFACE MOUNTED.
	120/208V, 3ø, 4W ELECTRICAL PANEL SURFACE MOUNTED.
	SWITCHBOARD OR POWER PANELBOARD.
	NON -FUSED DISCONNECT SWITCH, PAD LOCKABLE
	FUSED DISCONNECT SWITCH, PAD LOCKABLE
	MAGNETIC MOTOR STARTER, +5'-0" AFF U.O.N.
	COMBINATION MOTOR STARTER, +5'-0" AFF U.O.N.
225 NA	MOLDED CASE CIRCUIT BREAKER WITH THERMAL-MAGNETIC TRIPS, 3-POLE UNLESS NOTED. NUMERAL IS TRIP AMPERES. NA=NON-AUTOMATIC TYPE (MOLDED CASE SWITCH).
	GROUNDING CONDUIT AND CONDUCTOR.
	FUSE
	TRANSFORMER OR TRANSFORMER BANK.
H O A	HAND-OFF-AUTO PUSHBUTTONS.
	MOTOR STARTER OR CONTACTOR.
	MECHANICAL EQUIPMENT TYPE / NUMERICAL ORDER — MECHANICAL EQUIPMENT CALL-OUT
5	ELECTRIC MOTOR, HORSEPOWER INDICATED BY NUMBER
▲	TELEPHONE OUTLET WALL MOUNTED + 12" A.F.F., U.O.N. , RUN 3/4"C TO TELEPHONE BACKBOARD.
△	DATA OUTLET WALL MOUNTED + 12" A.F.F., U.O.N. , RUN 3/4"C TO COMPUTER BACKBOARD.
△	COMBINATION TELEPHONE AND DATA OUTLET, WALL MOUNTED + 12" A.F.F., U.O.N. FOR EACH ROOM HOMERUN 1"C TO TELEPHONE BACKBOARD.
S_m	HORSEPOWER RATED MANUAL STARTER WITH THERMAL OVERLOAD RELAY.
KWT	4-20ma KW.TRANSDUCER FOR CONSUMPTION & DEMAND
VAV	VARIABLE AIR VOLUME BOX.
	CONTROL/MOTOR STARTER FOR EQUIPMENT. MAY BE CONTRACTOR FURNISHED OR FURNISHED AS PART OF PACKAGED EQUIPMENT. VERIFY CONTROL REQUIREMENTS PRIOR TO SUBMITTALS

GENERAL ELECTRICAL NOTES

1. REFER TO ELECTRICAL SPECIFICATIONS FOR FURTHER DETAIL AS TO SCOPE, MATERIALS, AND EXECUTION OF ELECTRICAL WORK.
2. ALL WIRING DESIGN IS BASED ON 75°C COPPER CONDUCTORS OF TYPE THWN UNLESS OTHERWISE STATED. ELECTRICAL CONTRACTOR TO SIZE ALL WIRING NOT EXPLICITLY SHOWN ON DRAWINGS ACCORDING TO THE REQUIREMENTS OF NATIONAL ELECTRICAL CODE (NEC) FOR THE SPECIFIC APPLICATION AND CONDITIONS.
3. ALL CONDUCTORS SHALL BE COPPER (MINIMUM SIZE #12 AWG UNLESS SPECIFICALLY NOTED OTHERWISE). ALL INDICATIONS OF NUMBER OF CONDUCTORS EXCLUDE GROUND CONDUCTOR WHICH MUST BE PROVIDED.
4. THE CONTRACTOR SHALL BE RESPONSIBLE FOR CONFORMITY TO ALL LOCAL CODES AND ORDINANCES, THE STATE OF CALIFORNIA ELECTRICAL SAFETY ORDERS, THE NATIONAL AND CALIFORNIA ELECTRICAL CODE AND ANY ADDITIONAL JURISDICTIONS RELATING TO THE WORK
5. THE CONTRACTOR SHALL OBTAIN ALL REQUIRED PERMITS FOR ELECTRICAL WORK AND PAY ALL RELATED FEES.
6. THE CONTRACTOR SHALL FURNISH AND INSTALL ALL CONDUIT, WIRE, SWITCHES FIXTURES (WITH LAMPS), RECEPTACLES, SERVICES, SWITCHBOARDS PANELBOARDS AND ELECTRICAL EQUIPMENT, ETC. REQUIRED FOR A COMPLETE AND OPERATIONAL ELECTRICAL SYSTEM.
7. LOCATIONS SHOWN ON THE MECHANICAL DRAWINGS TAKE PRECEDENCE OVER THOSE SHOWN ON THE ELECTRICAL DRAWINGS. VERIFY WITH SMUD FOR CONFLICTING CONDITIONS BEFORE STARTING WORK
8. CONTRACTOR SHALL BE RESPONSIBLE FOR VERIFYING THAT EQUIPMENT BEING PROVIDED AND INSTALLED WILL FIT DIMENSIONALLY IN LOCATIONS SHOWN ON DRAWINGS.
9. IN THE EVENT OF A CONFLICT OR INCONSISTENCY BETWEEN ITEMS INDICATED ON THE PLANS AND/OR SPECIFICATIONS OR WITH CODE REQUIREMENTS, THE NOTE, SPECIFICATION OR CODE WHICH PRESCRIBES AND ESTABLISHES THE MORE COMPLETE JOB OR HIGHER STANDARD SHALL PREVAIL.
10. ALL PENETRATIONS OF FIRE-RATED SURFACES SHALL BE MADE WITH NON-COMBUSTIBLE MATERIALS OF A FIRE RATING EQUAL TO THE MATERIAL PENETRATED AND SHALL BE COMPLETELY FIRE-STOPPED.
11. PROVIDE PULL-WIRE IN ALL CONDUIT ONLY (C.O.) RUNS.
12. SEE MECHANICAL/PLUMBING PLANS AND SPECIFICATIONS FOR ADDITIONAL ELECTRICAL WORK, EQUIPMENT AND CONTROL WIRING TO BE FURNISHED AND INSTALLED BY OTHERS. CONTRACTOR SHALL COORDINATE WORK AS NECESSARY.
13. ELECTRICAL EQUIPMENT SHALL BE LOCATED AND COORDINATED WITH OTHER TRADES SO AS TO AVOID ALL MECHANICAL, PLUMBING AND ALL OTHER TRADES' EQUIPMENT OR WORK.
14. ALL ELECTRICAL EQUIPMENT EXPOSED TO THE OUTDOOR CLIMATE SHALL BE WEATHERPROOF.
15. ALL ELECTRICAL ROOF PENETRATIONS SHALL BE FLASHED.
16. FIELD VERIFY EXACT LOCATION OF ALL CONDUIT RUNS PRIOR TO INSTALLATION. COORDINATE WITH OTHER TRADES AS REQUIRED.
17. CONTRACTOR SHALL VERIFY EXACT LOCATION OF ALL EQUIPMENT CONNECTIONS AND DEVICES SHOWN ON THE DRAWINGS WITH THE CERTIFIED EQUIPMENT MANUFACTURES' DRAWINGS PROVIDED BY OWNER.

ELECTRICAL DRAWING INDEX

E-1.0	ELECTRICAL NOTES, SYMBOLS AND DRAWING LIST
E-1.1	CENTRAL PLANT MAIN SERVICE SINGLE LINE DIAGRAM
E-1.2	MCC 'A' AND FUEL CELL MCC SINGLE LINE DIAGRAM
E-1.6	ELECTRICAL CONDUIT AND CABLE SCHEDULE
E-2.0	ELECTRICAL POWER SITE PLAN - FRF U/G FEEDER ROUTE
E-2.1	CENTRAL UTILITY PLANT BLDG. POWER AND GROUNDING PLAN
E-2.2	CENTRAL UTILITY PLANT ELECTRICAL ROOM PLAN & ELEVATION
E-2.3A	CENTRAL UTILITY PLANT EXTERIOR PLAN SHEET 1
E-2.3B	CENTRAL UTILITY PLANT EXTERIOR PLAN SHEET 2
E-2.4	ELECTRICAL ROOM CABLE TRAY SUPPORT PLAN
E-2.5	ELECTRICAL DETAILS, SHEET 1
E-2.7	ELECTRICAL PANEL SCHEDULES

REGISTERED PROFESSIONAL ENGINEER — FREDERICK W. KACHENTO — No. E011140 — Exp. 6/30/13 — ELECTRICAL — STATE OF CALIFORNIA

NO.	DATE	REVISIONS
1	5/10/11	REVISED DWG E-1.1,E-1.6,E-2.1&E-2.5 PER PLAN CHECK COMMENTS
4	6/29/12	ISSUE FOR PLAN CHECK

DES SOLUTIONS
732 Val Sereno Drive
Encinitas, CA 92024
858/832-1242 Fax: 858/756-9891

ENERGY-TECH CONSULTANTS
1166 Oakmont Place
Nipomo, CA 93444
(760) 532-3573

SMUD
SACRAMENTO MUNICIPAL UTILITY DISTRICT

DESIGNED:	FWK
DRAWN:	FWK
APPROVED:	SMUD
DATE:	JAN 06, 2011
SCALE:	NONE

300KW CHP MICROGRID

ELECTRICAL NOTES, SYMBOLS & DRAWING LIST

JOB NO.

SHEET NO. E-1.0 OF SHEETS

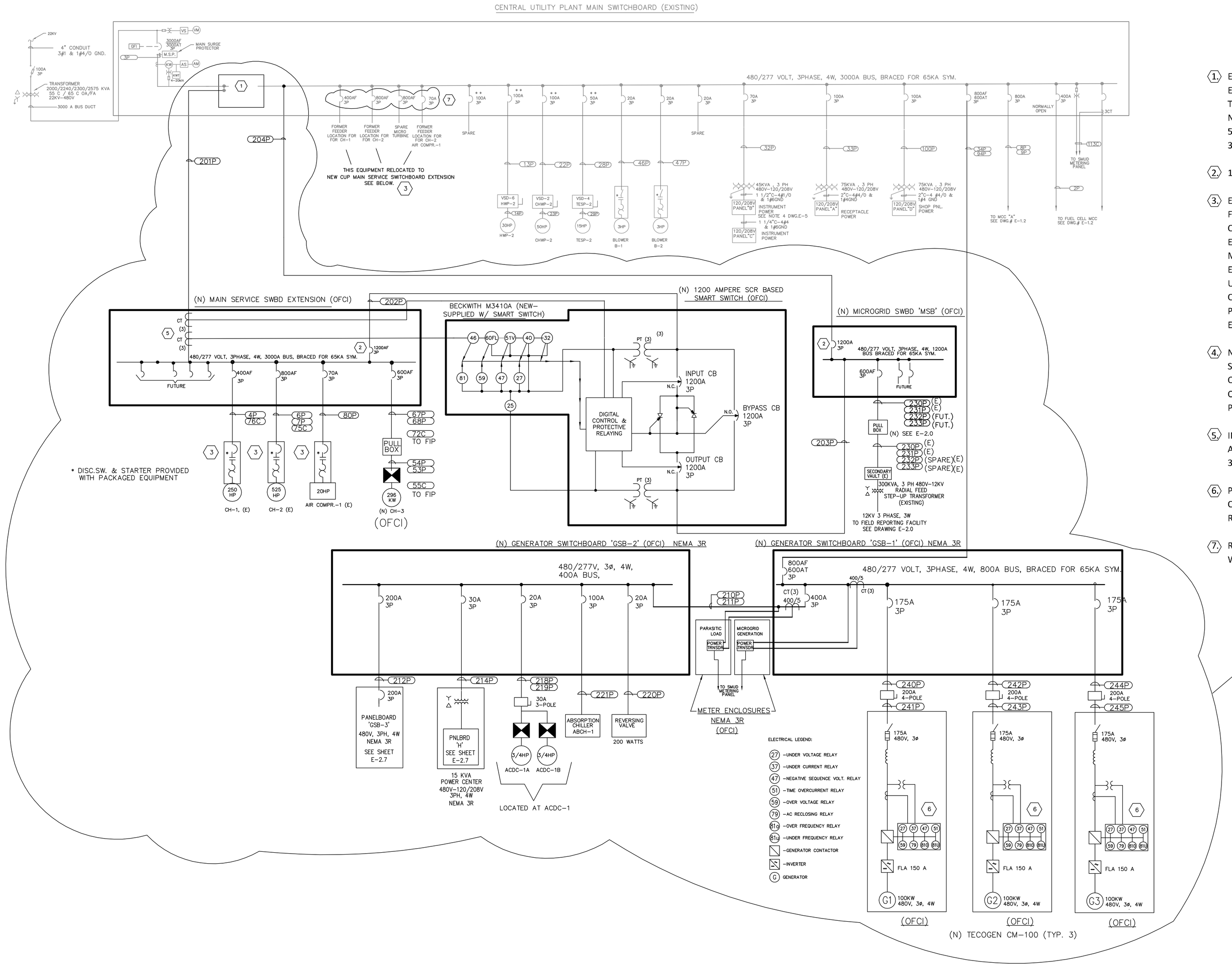

SHEET NOTES, DRAWING E-1.1

1. EXISTING 3000 AMPERE CUP MAIN SWITCHBOARD BUS TO BE MODIFIED TO REMOVE THE EXISTING PROVISION FOR THE FUTURE 2000 AMPERE BREAKER AND TO USE THAT LOCATION TO SPLIT THE BUS. SEE SHEET E-2.2. DETAILS B AND C FOR DEMOLITION REQUIREMENTS AND NEW CABLE LUGGING REQUIREMENTS. LUGGING PROVISIONS ARE REQUIRED FOR SIX 535KCMIL DLO TYPE CABLES PER PHASE AND NEUTRAL UPSTREAM OF SPLIT POINT AND THREE 373KCMIL TYPE DLO CABLES PER PHASE AND NEUTRAL DOWNSTREAM OF SPLIT POINT.

2. 100%-RATED BREAKERS ARE REQUIRED FOR THESE LOCATIONS.

3. EXISTING CHILLERS CH-1 AND CH-2 AND AIR COMPR-1 TO BE RECIRCUITED SO AS TO BE SERVED FROM NEW MAIN SERVICE SWITCHBOARD EXTENSION RATHER THAT FROM EXISTING MAIN CUP SWBD. NEW SUPPLY CONDUCTORS TO BE ROUTED FROM NEW SWITCHBOARD EXTENSION IN CONDUIT OVERHEAD TO REAR OF MAIN CUP SWBD AND DOWN THROUGH MAIN CUP SWBD AND INTO EXISTING UNDERGROUND CONDUITS STUBBED-UP AT BASE OF EXISTING MAIN CUP SWGR AND THEN ONWARD TO THE EXISTING RESPECTIVE EQUIPMENT. USE LONG BARREL COMPRESSION SPLICES WITH HEAT SHRINK TUBING TO JOIN NEW CONDUCTORS EXTENSIONS TO EXISTING CONDUCTORS. SEE ALSO CENTRAL PLANT BUILDING POWER PLAN DRAWINGS E-2.1 AND E-2.2. CONTRACTOR SHALL CONFIRM ACCURACY OF EXISTING CONDUITS STUB-UP LOCATIONS AND ROUTINGS PRIOR TO PERFORMING WORK.

4. NEW CHILLER CH-3 TO BE SUPPLIED FROM NEW MAIN SERVICE SWBD EXTENSION. NEW SUPPLY CONDUCTORS TO BE ROUTED FROM SWITCHBOARD EXTENSION IN CONDUITS OVERHEAD TO MAIN CUP SWBD AT REAR AND DOWN THROUGH MAIN CUP SWBD WITHIN CONDUITS AND INTO EXISTING SPECIFIED UNDERGROUND SPARE CONDUITS. SEE CENTRAL PLANT BUILDING POWER PLAN DRAWINGS E-2.1 & E-2.2.

5. INSTALLATION OF SIX CURRENT SENSING TRANSFORMERS BY CONTRACTOR. TRANSFORMERS ARE SUPPLIED BY SMART SWITCH SUPPLIER (INST. TRANSFORMER, INC. TYPE 500T-041X071-322). SEE CYBEREX DRAWING DOO49512-1-3 SHEET 5 OF 6.

6. PROTECTIVE RELAY DEVICES SUPPLIED WITH TECOGEN UNITS ARE NOT INTENDED FOR UTILITY COMPLIANCE OF IEEE STANDARD 1547. SMUD SHALL PROVIDE AND INSTALL PROTECTIVE RELAY SETTINGS FOR THIS EQUIPMENT DURING START-UP.

7. REMOVE THE FOUR FEEDER BREAKERS AND INSTALL BLANK COVERS. REPLACE VERTICAL WIRE-WAY COVERS DUE TO CUTTING TO INSTALL 800A MICRO-TURBINE C.B.

REGISTERED PROFESSIONAL ENGINEER FREDERICK W. KUNTZ No. E011140 Exp. 6/30/13 ELECTRICAL STATE OF CALIFORNIA

NO.	DATE	REVISIONS
1	5/10/11	REVISED PER PLAN CHECK COMMENTS
2	10/19/11	PRELIM ISSUED FOR REVIEW AND COMMENT, NOT FOR CONSTRUCTION
3	11/04/11	PLAN CHECK SET
4	7/01/12	ISSUED FOR PLAN CHECK

DE SOLUTIONS
732 Val Sereno Drive
Encinitas, CA 92024
858/832-1242 Fax: 858/756-9891

ENERGY-TECH CONSULTANTS
1166 Oakmont Place
Nipomo, CA 93444
(760) 532-3573

SMUD
SACRAMENTO MUNICIPAL UTILITY DISTRICT

DESIGNED: FWK
DRAWN: FWK
APPROVED: SMUD
DATE: JAN 06, 2011
SCALE: NONE

300KW CHP MICROGRID

CENTRAL PLANT MAIN SERVICE SINGLE LINE DIAGRAM

JOB NO.

SHEET NO. E-1.1 OF SHEETS

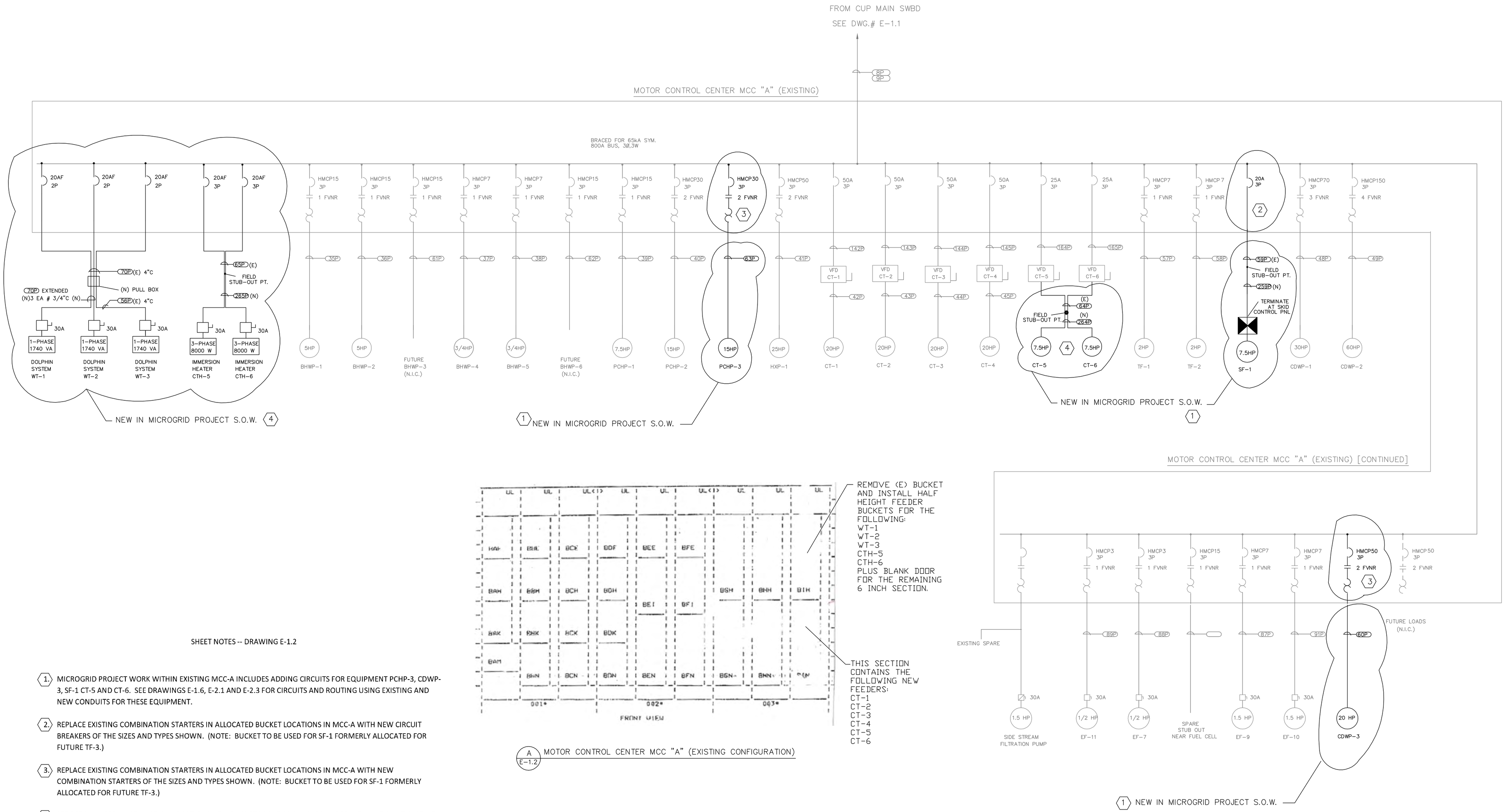

A E-1.2 MOTOR CONTROL CENTER MCC "A" (EXISTING CONFIGURATION)

SHEET NOTES -- DRAWING E-1.2

1. MICROGRID PROJECT WORK WITHIN EXISTING MCC-A INCLUDES ADDING CIRCUITS FOR EQUIPMENT PCHP-3, CDWP-3, SF-1 CT-5 AND CT-6. SEE DRAWINGS E-1.6, E-2.1 AND E-2.3 FOR CIRCUITS AND ROUTING USING EXISTING AND NEW CONDUITS FOR THESE EQUIPMENT.

2. REPLACE EXISTING COMBINATION STARTERS IN ALLOCATED BUCKET LOCATIONS IN MCC-A WITH NEW CIRCUIT BREAKERS OF THE SIZES AND TYPES SHOWN. (NOTE: BUCKET TO BE USED FOR SF-1 FORMERLY ALLOCATED FOR FUTURE TF-3.)

3. REPLACE EXISTING COMBINATION STARTERS IN ALLOCATED BUCKET LOCATIONS IN MCC-A WITH NEW COMBINATION STARTERS OF THE SIZES AND TYPES SHOWN. (NOTE: BUCKET TO BE USED FOR SF-1 FORMERLY ALLOCATED FOR FUTURE TF-3.)

4. SEE DETAIL 'A FOR INSTALLATION LOCATIONS NEW BUCKET LOCATIONS IN MCC 'A' FOR WT-1, WT-2, WT-3, CTH-5, CTH-6, CT-5 AND CT-6.

REGISTERED PROFESSIONAL ENGINEER FREDERICK W. WACHENTIG No. E011140 Exp. 6/30/13 ELECTRICAL STATE OF CALIFORNIA

NO.	DATE	REVISIONS
3	11/04/11	PLAN CHECK SET
4	07/01/12	ISSUED FOR PLAN CHECK

DE SOLUTIONS
732 Val Sereno Drive
Encinitas, CA 92024
858/832-1242 Fax: 858/756-9891

ENERGY-TECH CONSULTANTS
1166 Oakmont Place
Nipomo, CA 93444
(760) 532-3573

SMUD
SACRAMENTO MUNICIPAL UTILITY DISTRICT

DESIGNED: FWK
DRAWN: FWK
APPROVED: SMUD
DATE: JAN 06, 2011
SCALE: NONE

300KW CHP MICROGRID

MCC 'A' AND FUEL CELL MCC SINGLE LINE DIAGRAM

JOB NO.

SHEET NO. E-1.2 OF SHEETS

NOTE: (1) DESIGNATES EXISTING CONDUIT SCHEDULE CHANGE FOR MICROGRID PROJECT. CONDUITS ADDED FOR MIGROGRID PROJECT SHOWN IN ADDED SCHEDULE.

CONDUIT SCHEDULE --CHANGED

PLAN SYMBOL #	CONDUIT SIZE	CONDUIT TYPE	CONDUCTOR QTY.& SIZE	CONDUCTOR INSULATION RATING	LOCATION FROM	LOCATION TO	DWG. NOS	REMARKS	(1)
1P	4"	PVC	3#1 &1#4/0 GND	25KV	2000 KVA TRANSFORMER	22KV POWER SOURCE	CP/E3 & E5		
2P	TRENCH		3#500 MCM & 1#1/0 GND	600V	FUEL CELL MCC	480V SWITCH BOARD	CP/E3 & E5		
3P	2"	EMT	3#2 & 1#2 GND	600V	MAIN SURGE PROTECTOR	480V SWITCH BOARD	CP/E3 & E4		
4P	3"	PVC	3#500 MCM & 1#1/0 GND	600V	DISCONNECT SW.@ CHILLER 1	480V SWITCH BOARD	E-1.1, E-2.2	EXISTG CONDUIT W/ON D/H ROUTE PORTION ADDED	1
5C									
6P	3"	PVC	3#500 MCM & 1#2GND		DISCONNECT SW.@ CHILLER 2	480V SWITCH BOARD	E-1.1, E-2.2	EXISTG CONDUIT W/ON D/H ROUTE PORTION ADDED	1
7P	3"	PVC	3#500 MCM & 1#2GND		DISCONNECT SW.@ CHILLER 2	480V SWITCH BOARD	E-1.1, E-2.2	EXISTG CONDUIT W/ON D/H ROUTE PORTION ADDED	1
8P	TRENCH		3#500 MCM		480V SWITCH BOARD	MOTOR CONTROL CENTER (MCC-A)	CP/E3 & E5	VIA TRENCH	
9P	TRENCH		3#500 MCM		480V SWITCH BOARD	MOTOR CONTROL CENTER (MCC-A)	CP/E3 & E5	VIA TRENCH	
10P	TRENCH		3#2 & 1#6 GND		VSD HWP-1 (VSD-5)	FUEL CELL MCC	CP/E3 & E5	VIA TRENCH	
11P	1"	PVC	3#6 & 1#8 GND		MOTOR HWP-1	VSD HWP-1 (VSD-5)	CP/E3 & E5		
12C									
13P	TRENCH		3#2 & 1#6 GND		VSD HWP-2 (VSD-6)	480V SWITCH BOARD	CP/E3 & E5	VIA TRENCH	
14P	1"	PVC	3#6 & 1#8 GND		MOTOR HWP-2	VSD HWP-2 (VSD-6)	CP/E3 & E5		
15C									
16P	TRENCH				VSD HWP-3	480V SWITCH BOARD	CP/E3 & E5	VIA TRENCH (FUTURE)	
17P	1"	PVC			MOTOR HWP-3	VSD HWP-3	CP/E3 & E5	(FUTURE)	
18C									
19P	1"	PVC	3#2 & 1#6 GND		VSD CHWP-1	FUEL CELL MCC	CP/E3 & E5		
20P	1"	PVC	3#4 & 1#8 GND		MOTOR CHWP-1	VSD CHWP-1	CP/E3 & E5		
21C									
22P	1 1/4"	PVC	3#2 & 1#6 GND		VSD CHWP-2	480V SWITCH BOARD	CP/E3 & E5		
23P	1"	PVC	3#4 & 1#8 GND		MOTOR CHWP-2	VSD CHWP-2	CP/E3 & E5		
24P									
25P	TRENCH		3#6& 1#8 GND		VSD TESP-1	MOTOR CONTROL CENTER (MCC-A)	CP/E3 & E5		
26P	1"	PVC	3#10 & 1#12 GND		MOTOR TESP-1	VSD TESP-1			
28P	TRENCH		3#6 & 1#8 GND		VSD TESP-2	480V SWITCH BOARD	CP/E3 & E5		
29P	1"	PVC	3#10 & 1#12 GND		MOTOR TESP-2	VSD TESP-2	CP/E3 & E5		
30C	2"	PVC	6PR#18 TWIST SHLD 2 CABLE FIBER OPTIC		FUEL CELL	ENGINEERING CONTROL RM.			
31P	1"	PVC	2#10 &1#12 GND		HOT WATER SYS. FIP	PNL"C"-CKT 1			
32P	1"	PVC	3#4 &1#6 GND		45 KVA TRANSFORMER @ PNL"B"	MOTOR CONTROL CENTER (MCC-A)	CP/E3 & E5	VIA TRENCH	
33P	1"	PVC	3#2 &1#4 GND		75 KVA TRANSFORMER @ PNL"A"	480V SWITCH BOARD	CP/E3 & E5		
34P	3"	PVC	4#350 MCM & 1#1/0GND		CUP MAIN DIST SWBD	GENERATOR SWITCHBOARD 'GSB'	E-1.1, E-2.1, E-2.3	(E) CONDUIT.CIRCUIT SHARED RACEWAY WITH CONDUIT 94P	1
35P	3/4"	PVC	3#10 &1#12 GND		MOTOR BHWP-1	MOTOR CONTROL CENTER (MCC-A)	CP/E3 & E5		
36P	3/4"	PVC	3#10 &1#12 GND		MOTOR BHWP-2	MOTOR CONTROL CENTER (MCC-A)	CP/E3 & E5		
37P	3/4"	PVC	3#10 &1#12 GND		MOTOR BHWP-4	MOTOR CONTROL CENTER (MCC-A)	CP/E3 & E5		
38P	3/4"	PVC	3#10 &1#12 GND		MOTOR BHWP-5	MOTOR CONTROL CENTER (MCC-A)	CP/E3 & E5		
39P	3/4"	PVC	3#10 &1#12 GND		MOTOR PCHP-1	MOTOR CONTROL CENTER (MCC-A)	CP/E3 & E5		
40P	3/4"	PVC	3#10 & 1#12 GND		MOTOR PCHP-2	MOTOR CONTROL CENTER (MCC-A)	CP/E3 & E5		
41P	3/4"	PVC	3#8 & 1#10 GND		MOTOR HXP-1	MOTOR CONTROL CENTER (MCC-A)	CP/E3 & E5		
42P	1"	PVC	6#8 & 1#10 GND		VFD CT-1	MOTOR CT-1	E-1.1, E-2.2,2.3		
43P	1"	PVC	6#8 & 1#10 GND		VFD CT-2	MOTOR CT-2	E-1.1, E-2.2,2.3		
44P	1"	PVC	6#8 & 1#10 GND		VFD CT-3	MOTOR CT-3	E-1.1, E-2.2,2.3		
45P	1"	PVC	6#8 & 1#10 GND		VFD CT-4	MOTOR CT-4	E-1.1, E-2.2,2.3		
46P	1"	PVC	3#10 & 1#12 GND		STARTER BOILER BLOWER (B-1)	480V SWITCH BOARD	CP/E3 & E5		
47P	1"	PVC	3#10 & 1#12 GND		STARTER BOILER BLOWER (B-2)	480V SWITCH BOARD	CP/E3,E5 & E6		
48P	1"	PVC	3#6 & 1#8 GND		MOTOR CDWP-1	MOTOR CONTROL CENTER (MCC-A)	CP/E3 & E5		
49P	1 1/4"	PVC	3#2 & 1#6 GND		MOTOR CDWP-2	MOTOR CONTROL CENTER (MCC-A)	CP/E3 & E5		
50P	1"	PVC	3#10 & 1#12 GND		HOTWATER PUMP	FUEL CELL MCC	CP/E3,E5 & E6		
51P	2"	PVC			SPARE @ FUEL CELL	FUEL CELL MCC	CP/E3,E5 & E6		
52P	2"	PVC	(PNL B CKT 19-21) 2#10 &1#12G (PNL B CKT 17) 2#10 & 1#12G		ELECT. ROOM PANEL B ROUTED TO EQUIP. YARD VIA (E) CONDUIT 52P UNDER MCCA	REPLACEMENT UTILITY SUMP PUMP SITE LIGHTING POLES	CP/E-1.2,E-2.2, 2.3 E-2.7	CIRCUITS SEPARATED AT JB 52P.SEE DRAWING E-2.3 SHEET NOTE #10	1
53P	4"	PVC	3#350KCMIL+ 1#1 GRD		CUP BLDG WEST WALL CHILLER #3 AREA	NEW CHILLER 3	CP/E-1.2,E-2.1	EXISTG CONDUIT ACTIVATED FOR MICROGRID PROJECT	1
54P	4"	PVC	3#350KCMIL+ 1#1 GRD					EXISTG CONDUIT ACTIVATED FOR MICROGRID PROJECT	1
55C	4"	PVC	HOLD					EXISTG CONDUIT ACTIVATED FOR MICROGRID PROJECT	1
56P	4"	PVC	2#10 & 1#12 GND 2#10 & 1#12 GND		CUP BLDG WEST WALL CHILLER #3 AREA	CH-3 H20 TRMT PANEL (WT-3) REVERSG VALVE PANEL AT CH-3	CP/E-1.2,E-2.1 CP/E-1.2,E-2.1	EXISTG CONDUIT ACTIVATED FOR MICROGRID PROJECT	1
57P	3/4"	PVC	3#10 & 1#12 GND		TF-1	MOTOR CONTROL CENTER (MCC-A)	CP/E3,E5 & E6		
58P	3/4"	PVC	3#10 & 1#12 GND		TF-2	MOTOR CONTROL CENTER (MCC-A)	CP/E3,E5 & E6		
59P	3/4"	PVC	3#10 & 1#12 GND		MOTOR CONTROL CENTER (MCC-A)	EXISTG STUB-OUT IN EQUIP YARD	CP/E-1.2,E-2.1	(E) CONDUIT ACTIVATED EXTND AS 259P IN YARD	1
60P	1 1/4"	PVC	3#8 & 1#10 GND		MOTOR CONTROL CENTER (MCC-A)	MOTOR CDWP-3 (NEW 20HP)	CP/E-1.2,E-2.1		1
61P	3/4"	PVC	SPARE		MOTOR BHWP-3 (FUTURE)	MOTOR CONTROL CENTER (MCC-A)	CP/E3 & E5		
62P	3/4"	PVC	SPARE		MOTOR BHWP-6 (FUTURE)	MOTOR CONTROL CENTER (MCC-A)	CP/E3 & E5		
63P	3/4"	PVC	3#10 & 1#12 GND		MOTOR CONTROL CENTER (MCC-A)	MOTOR PCHP-3 (NEW 15HP)	CP/E-1.2,E-2.1		
64P	1 1/4"	PVC	(CT-5) 3#10 & 1#12G, (SHLD) (CT-6) 3#10 & 1#12G, (SHLD)		ELECT. ROOM VFD CT5 AND CT6 ROUTED TO EQUIP. YARD VIA (E) CONDUIT 64P	EXISTG STUB-OUT IN EQUIP YARD	E-1.1, E-2.2,2.3	(E) CONDUIT ACTIVATED EXTND ABOVE GRADE AS 264P IN YARD	1
65P	1 1/4"	PVC	(CTH-5) 3#10 & 1#12G (CTH-6) 3#10 & 1#12G (PNL B CKT 22) 2#10 & 1#12G (PNL B CKT 24) 2#10 & 1#12G		MCC A FDRS TO CTH-5 & CTH-6 ROUTED TO EQUIP. YARD VIA (E) CONDUIT 65P ELECT. ROOM PANEL B ROUTED TO EQUIP. YARD VIA (E) CONDUIT 65P UNDER MCCA	EXISTG STUB-OUT IN EQUIP YARD	E-1.1, E-2.2,2.3	(E) CONDUIT ACTIVATED 65P EXTND ABOVE GRADE AS 265P IN YARD	1
66P	1 1/4"	PVC	SPARE						

CONDUIT SCHEDULE --CHANGED

PLAN SYMBOL #	CONDUIT SIZE	CONDUIT TYPE	CONDUCTOR QTY.& SIZE	CONDUCTOR INSULATION RATING	LOCATION FROM	LOCATION TO	DWG. NOS	REMARKS	(1)
67P	4"	PVC	3#350KCMIL+ 1#1 GRD	600V	MAIN SERVICE SWBD EXTENSION	CUP BLDG WEST WALL CHILLER #3 AREA	CP/E-1.1,E-2.1	(E) COND. ACTIVATED W/ON D/H ROUTE PORTION ADDED	1
68P	4"	PVC	3#350KCMIL+ 1#1 GRD	600V	MAIN SERVICE SWBD EXTENSION	CUP BLDG WEST WALL CHILLER #3 AREA	CP/E-1.1,E-2.1	(E) COND. ACTIVATED W/ON D/H ROUTE PORTION ADDED	1
69P	4"	PVC	SPARE		480V SWITCH BOARD	CUP BLDG WEST WALL CHILLER #3 AREA			
70P	4"	PVC	(WT-1) 2#10 & 1#12 GND (WT-2) 2#10 & 1#12 GND (WT-3) 2#10 & 1#12 GND	600V 600V 600V	MCC A FDRS TO WT-1,2, & 3 & PANEL 'B' CIRCUIT FOR CH-3 REVERSING VALVE ROUTED TO CENTRAL PLANT VIA (E) CONDUIT 70P.	CUP BLDG WEST WALL CHILLER #3 AREA	CP/E-1.2,E-2.1,2.2	EXISTG CONDUIT ACTIVATED SERVICE FOR WT-1,2 & 3 USE 3/4" CONDUITS FROM WALL JB TO EQUIP AS INDICATED ON SHT E-2.1	1
			2#10 & 1#12 GND	600V	PANEL 'B' CIRCUIT #20		CP/E-2.5, E-2.1	SERVES CH-3 REV VALVE	
71P	3/4"	PVC	SPARE		BOILER BLOWER FAN-3 (FUTURE)		CP/E3 & E5		
72C	1 1/2"	PVC	HOLD	600V	CUP BLDG WEST WALL CHILLER #3 AREA	CHILLED WATER SYS. FIP PNL.	CP/E-1.1, E-2.1	EXISTG CONDUIT ACTIVATED FOR MICROGRID PROJECT	1
73A	1 1/4"	PVC	5 X 2/C#16 SHLD	600V	FM-1,TT-303 & TT-304	BTU METERING PNL. VIA CONDUIT#104A,106A & 81A	CP/E6,E5,E4 & E13		
74C	1 1/4"	PVC	2PR THRMOCOPLE TYPY K #16	600V	TT-303 & TT-304	FUEL CELL CONTROLER			
75C	1 1/2"	PVC		600V	CHILLER 2 CONTROL PNL.	CHILLED WATER SYS. FIP PNL.	CP/E2 & E5		1
76C	1 1/2"	PVC		600V	CHILLER 1 CONTROL PNL.	CHILLED WATER SYS. FIP PNL.	CP/E2 & E5		
77C	1 1/4"	PVC		600V	E.P.D. PNL.	CHILLED WATER SYS. FIP PNL.	CP/E2 & E5		
78P	1 1/4"	PVC	4#4 & 1#6 GND	600V	PANEL 'B' @ ELEC. RM.	PANEL 'C' @ HOT WATER SYS. FIP PNL.	CP/E2 & E5		
79P	1 1/4"	PVC		600V	PANEL 'B' @ ELEC. RM.	CHILLED WATER SYS. FIP PNL.	CP/E2 & E5		
80P	1"	PVC	3#8 & 1#10 GND	600V	AIR COMPR.# 1 & 2	480V SWITCH BOARD	CP/E-2.2	EXISTG CONDUIT W/ON TRNCH ROUTE PORTION ADDED	1
81A	1 1/2"	EMT		600V	BTU METERING PNL.	CHILLED WATER SYSTEM FIP	CP/E4	TO FUEL CELL VIA CONDUIT # 106A & 104A	
82P	3/4"	EMT	3#8 & 1#10 GND	600V	EC-1		CP/E2 & E7		
83P	3/4"	EMT	3#10 & 1#12 GND	600V	EC-2 PANEL	FUEL CELL MCC	CP/E2 & E8		
84P	3/4"	EMT	3#10 & 1#12 GND	600V	EC-3 PANEL	FUEL CELL MCC	CP/E2 & E8		
85P	3/4"	EMT	3#10 & 1#12 GND	600V	AHU-1	FUEL CELL MCC	CP/E2 & E7		
86P	3/4"	EMT	3#10 & 1#12 GND	600V	AHU-2	FUEL CELL MCC	CP/E2 & E8		
87P	3/4"	EMT	3#10,& 1#12 GND	600V	EF-9	MCC"A"	CP/E2 & E8		
88P	3/4"	EMT	3#10 & 1#12 GND	600V	EF-7	MCC"A"			
89P	3/4"	EMT	3#10 ,2#12& 1#12 GND	600V	EF-11 & DAMPER	MCC"A"			
90 TEL	3"	PVC			TEL. BACKBOARD	EXTEND 4"-0"OUTSIDE EAST WALL OF ELECTRICAL EQUIP.RM.	CP/E4 & E5		
91P	3/4"	EMT	3#10 & 1#12 GND	600V	EF-10	MCC"A"	CP/E4 & E8		
92A	2"	PVC		600V	PULL BOX @ @ FUEL CELL. FOR CONTROL	FUEL CELL OPENING THRU BOTTOM FOR CONTROL	CP/E6		
93	2"	PVC	SPARE	600V	OUT SIDE FUEL CELL	FUEL CELL OPENING THRU BOTTOM FOR CONTROL	CP/E6		
94P	3"	PVC	4#350MCM & 1#1/0 GND	600V	CUP MAIN DIST SWBD	GENERATOR SWITCHBOARD 'GSB'	E-1.1, E-2.1, E-2.3	(E) CONDUIT.CIRCUIT SHARED RACEWAY WITH CONDUIT 34P	1
95P	3/4"	PVC	3#10 & 1#12 GND	600V	FUEL CELL ELEC.SYS. ASSAMBLY	COOLING MODULE FAN	CP/E2 & E6		
96C	3/4"	PVC	2#12	600V	FUEL CELL ELEC.SYS. ASSAMBLY	COOLING MODULE CONTROL	CP/E2 & E6		
97P	2"	PVC		600V	FUEL CELL ALTERNATE HEATER POWER	PORTABLE GEN. (RECEPTACLE)	CP/ E6		
98P	2"	PVC	4#8 & 1#10 GND 2#10	600V	FUEL CELL MAINTENANCE POWER	PANEL"A" CKT.#19,21,23&25	CP/E5 & E6	3Ø 208V &120V RECEPT.	
99TEL	2"	PVC			FUEL CELL TEL.	TELEPHONE BACKBOARD	CP/E4,E5 & E6		
100P	1 1/4"	PVC	3#2 & 1#4 GND	600V	75KVA TRANSFORMER FOR PNL"D"	480V SWITCH BOARD	CP/E2 & E7		
101P	1 1/4"	PVC	3#4 & 1#4 GND	600V	45KVA TRANSFORMER @ 277/480V PNL"F"	FUEL CELL MCC	CP/E5		
102A	4"	PVC		600V	WATER TANK	CHILLED WATER SYSTEM "FIP"	CP/E5 & E6		
103C	2"	PVC		600V	WATER TANK	PULL BOX @ CT-3	CP/ E6		
104A	2"	PVC		600V	PULL BOX @ @ FUEL CELL. FOR CONTROL	PULL BOX @ CT-3	CP/ E6		
105C	2"	PVC		600V	PULL BOX @ CT-3	MOTOR CONTROL CENRTER (MCC-A)	CP/ E6		
106A	4"	PVC		600V	PULL BOX @ CT-3	CHILLED WATER SYSTEM "FIP"	CP/ E6		
107A	2"	PVC		600V	ALL INSTRUMENT IN VAULT SOUTH RAILROAD TRACKS	PULL BOX @ @ FUEL CELL. FOR CONTROL	CP/ E6		
108C	1 1/2"	PVC		600V	VSD#3 & VSD#4	HOT WATER SYSTEM "FIP"	CP/E5		
109C	2"	EMT		600V	MCC # A	CHILLED WATER SYSTEM "FIP"	CP/E5		
110C	1"	PVC		600V	HOT WATER SYSTEM "FIP"	OPERATOR'S TERM. EQUIPMENT	CP/E5		
111C	1"	PVC		600V	CHILLED WATER SYSTEM "FIP"	OPERATOR'S TERM. EQUIPMENT	CP/E5		
112C	1"	EMT		600V	FUEL CELL MCC	METERING PANEL	CP/ E6		
113C	1"	EMT		600V	480V SWITCH BOARD	METERING PANEL	CP/ E6		
114	3"	PVC	3#350MCM & 1#1/0 GND	600V	DISCONNECT SWITCH AT FUEL CELL	FUEL CELL OUTPUT LINE FOR FUEL CELL MCC	CP/ E6&E2		
115	3"	PVC	3#350MCM & 1#1/0 GND	600V	DISCONNECT SWITCH AT FUEL CELL	FUEL CELL OUTPUT LINE FOR 480V SWITCH BOARD	CP/ E6&E2		
117	3/4"	EMT	8#12 THHN	600V	FUEL CELL/MCCA	SIDE STREAM FILTRATION PUMPS	CP/E5		
142P	1"	PVC	6#8 & 1#10 GND	600V	MOTOR CONTROL CENTER (MCC-A)	VFD CT-1	E-1.2, E-2.3		
143P	1"	PVC	6#8 & 1#10 GND	600V	MOTOR CONTROL CENTER (MCC-A)	VFD CT-2	E-1.2, E-2.3		
144P	1"	PVC	6#8 & 1#10 GND	600V	MOTOR CONTROL CENTER (MCC-A)	VFD CT-3	E-1.2, E-2.3		
145P	1"	PVC	6#8 & 1#10 GND	600V	MOTOR CONTROL CENTER (MCC-A)	VFD CT-4	E-1.2, E-2.3		
164P	1 1/4"	PVC	3#10 & 1#12 GND	600V	MOTOR CONTROL CENTER (MCC-A)	VFD CT-5	E-1.2, E-2.3		
165P	1 1/4"	PVC	3#10 & 1#12 GND	600V	MOTOR CONTROL CENTER (MCC-A)	VFD CT-6	E-1.2, E-2.3		

CONDUIT SCHEDULE --ADDED FOR MICROGRID PROJECT

PLAN SYMBOL #	CONDUIT SIZE	CONDUIT TYPE	CONDUCTOR QTY.& SIZE	CONDUCTOR INSULATION RATING	LOCATION FROM	LOCATION TO	DWG. NOS	REMARKS (1)
201P	CABLE TRAY		6X(4-535KCMIL)+1-444KCMILGRD	2000V	CUP SWBD SUPPLY POINT TAP	CUP SWITCHBOARD EXTENSION	E-1.1, E-2.2	DLO TYPE CABLE, CT RATED
202P	CABLE TRAY		3X(4-373KCMIL)+1-373KCMILGRD	2000V	CUP SWITCHBOARD EXTENSION	1200A SMART SWITCH	E-1.1, E-2.2	DLO TYPE CABLE, CT RATED
203P	CABLE TRAY		3X(4-373KCMIL)+1-373KCMILGRD	2000V	1200A SMART SWITCH	MICROGRID SWBRD 'MGS'	E-1.1, E-2.2	DLO TYPE CABLE, CT RATED
204P	CABLE TRAY		3X(4-373KCMIL)+1-373KCMILGRD	2000V	MICROGRID SWBRD 'MGS'	CUP SWBD LOAD POINT TAP	E-1.1, E-2.2	DLO TYPE CABLE, CT RATED
210P	2"	RGS	4-#3/0+ 1 #2 GRD	600V	GSB-1	GSB-2	E-1.1, E-2.3	
211P	2"	RGS	4-#3/0+ 1 #2 GRD	600V	GSB-1	GSB-2	E-1.1, E-2.3	
212P	2"	RGS	3-#3/0+ 1 #2 GRD	600V	GSB-2	GSB-3 (PANELBOARD)	E-1.1, E-2.3	
214P	3/4"	RGS	3-#10 + 1 #12 GRD	600V	GSB-2	15 KVA 480-120/208 XFRMR	E-1.1, E-2.3	
216P	3/4"	RGS	3#10 & 1#10 GND VFD CABLE	600V	GSB-3 (PANELBOARD)	VFD FOR 2 HP HXP-2A	E-1.1, E-2.3	VFD CABLE FULL-SIZE GRD. W/ SHLD. BELDEN 'CLASSIC' OR EQ.
217P	3/4"	RGS	3#10 & 1#10 GND VFD CABLE	600V	GSB-3 (PANELBOARD)	VFD FOR 2 HP HXP-2B	E-1.1, E-2.3	VFD CABLE FULL-SIZE GRD. W/ SHLD. BELDEN 'CLASSIC' OR EQ.
218P	3/4"	RGS	3-#10 + 1 #12 GRD	600V	GENERATOR SWCHBRD 'GSB-2'	ACDC-1 (FOR: FOR 2-3/4HP FANS)	E-1.1, E-2.3	
219P	3/4"	RGS	SPARE	600V	GENERATOR SWCHBRD 'GSB-2'	ACDC-1	E-1.1, E-2.3	
220P	1-1/2"	RGS	2#10 & 1#12 GND	600V	GENERATOR SWCHBRD 'GSB-2'	REV VALVE PNL AT ABCH-1	E-1.1, E-2.3	
221P	1-1/2"	RGS	4-#2 + 1 #8 GRD	600V	GENERATOR SWCHBRD 'GSB-2'	ABSORPTION CHILLER PACKAGE	E-1.1, E-2.3	
222P	3/4"	RGS	3#10 & 1#10 GND VFD CABLE	600V	GSB-3 (PANELBOARD)	VFD FOR 3 HP AHVP-1A	E-1.1, E-2.3	VFD CABLE FULL-SIZE GRD. W/ SHLD. BELDEN 'CLASSIC' OR EQ.
223P	3/4"	RGS	3#10 & 1#10 GND VFD CABLE	600V	GSB-3 (PANELBOARD)	VFD FOR 3 HP AHVP-1B	E-1.1, E-2.3	VFD CABLE FULL-SIZE GRD. W/ SHLD. BELDEN 'CLASSIC' OR EQ.
224P	3/4"	RGS	3#10 & 1#12 GND	600V	GSB-3 (PANELBOARD)	MTR CNTRL FOR 3 HP HWC-1A	E-1.1, E-2.3	
225P	3/4"	RGS	3#10 & 1#12 GND	600V	GSB-3 (PANELBOARD)	MTR CNTRL FOR 3 HP HWC-1B	E-1.1, E-2.3	
226P	1"	RGS	3#8 & 1#8 GND VFD CABLE	600V	GSB-3 (PANELBOARD)	VFD FOR 25 HP CDWP-4A	E-1.1, E-2.3	VFD CABLE FULL-SIZE GRD. W/ SHLD. BELDEN 'CLASSIC' OR EQ.
227P	1"	RGS	3#8 & 1#8 GND VFD CABLE	600V	GSB-3 (PANELBOARD)	VFD FOR 25 HP CDWP-4B	E-1.1, E-2.3	VFD CABLE FULL-SIZE GRD. W/ SHLD. BELDEN 'CLASSIC' OR EQ.
228P	3/4"	RGS	2#10 & 1#12 GND	600V	PANEL H, CKT #1, (AT GSB-2)	WT-4 PANEL AT ABCH-1	E-1.1, E-2.3	
230P	4"	RGS	2X(3-600KCMIL)+1-#1/0 GRD	600V	MICROGRID SWBRD 'MGS'	STEP-UP TFRMR 2ND VAULT	E-1.1, E-2.0	
231P	4"	RGS	2X(3-600KCMIL)+1-#1/0 GRD	600V	MICROGRID SWBRD 'MGS'	STEP-UP TFRMR 2ND VAULT	E-1.1, E-2.0	
232P	4"	RGS	RACK SPACE FOR FUTURE	600V	DUCT BANK AT CUP BLDG WALL	STEP-UP TFRMR 2ND VAULT	E-2.0, E-2.2	
233P	4"	RGS	RACK SPACE FOR FUTURE	600V	DUCT BANK AT CUP BLDG WALL	STEP-UP TFRMR 2ND VAULT	E-2.0, E-2.2	
240P	2.5"	RGS	4-#2/0+#6 GRD	600V	GENERATOR SWCHBRD 'GSB-1'	GEN #1 4-POLE SAFETY SWITCH	E-1.1, E-2.3	
241P	2.5"	RGS	4-#2/0+#6 GRD	600V	GEN #1 4-POLE SAFETY SWITCH	MICROGRID GENERATOR #1	E-1.1, E-2.3	
242P	2.5"	RGS	4-#2/0+#6 GRD	600V	GENERATOR SWCHBRD 'GSB-1'	GEN #2 4-POLE SAFETY SWITCH	E-1.1, E-2.3	
243P	2.5"	RGS	4-#2/0+#6 GRD	600V	GEN #2 4-POLE SAFETY SWITCH	MICROGRID GENERATOR #2	E-1.1, E-2.3	
244P	2.5"	RGS	4-#2/0+#6 GRD	600V	GENERATOR SWCHBRD 'GSB-1'	GEN #3 4-POLE SAFETY SWITCH	E-1.1, E-2.3	
245P	2.5"	RGS	4-#2/0+#6 GRD	600V	GEN #3 4-POLE SAFETY SWITCH	MICROGRID GENERATOR #3	E-1.1, E-2.3	
246C	2"	RGS	GEN CONTROL WIRING	600V	GENERATOR SWCHBRD 'GSB-1'	GEN #1 CONTROL CABINET	E-2.3	
247C	2"	RGS	GEN CONTROL WIRING	600V	GEN #1 CONTROL CABINET	GEN #2 CONTROL CABINET	E-2.3	
248C	2"	RGS	GEN CONTROL WIRING	600V	GEN #2 CONTROL CABINET	GEN #3 CONTROL CABINET	E-2.3	
251P	3/4"	RGS	3#10 & 1#10 GND VFD CABLE	600V	GSB-3 (PANELBOARD)	VFD FOR 5 HP PCHVP-4A	E-1.1, E-2.3	VFD CABLE FULL-SIZE GRD. W/ SHLD. BELDEN 'CLASSIC' OR EQ.
252P	3/4"	RGS	3#10 & 1#10 GND VFD CABLE	600V	GSB-3 (PANELBOARD)	VFD FOR 5 HP PCHVP-4B	E-1.1, E-2.3	VFD CABLE FULL-SIZE GRD. W/ SHLD. BELDEN 'CLASSIC' OR EQ.
259P	3/4"	RGS	3#10 & 1#12 GND	600V	EXTENSION OF 59P IN EQP YD	7.5HP, SF-1	E-1.2, E-2.3	
							CP/E-1.2,E-2.1	
264P	1 1/4"	RGS	(CT-5) 3#10 & 1#12G, (SHLD) (CT-6) 3#10 & 1#12G, (SHLD)	600V 600V	(E) 64P STUB-OUT IN EQUIP.YARD	CT-5 FAN MOTOR CT-6 FAN MOTOR	E-1.1, E-2.2,2.3	64P EXTND ABOVE GRADE AS 264P IN YARD
265P	1 1/4"	RGS	(CTH-5) 3#10 & 1#12G (CTH-6) 3#10 & 1#12G (PNL B CKT 22) 2#10 & 1#12G (PNL B CKT 24) 2#10 & 1#12G	600V 600V 600V 600V	(E) 65P STUB-OUT IN EQUIP.YARD	CTH-5 (IMMERSN HTR. 8KW, 3-PH) CTH-6 (IMMERSN HTR. 8KW, 3-PH) CT-5 H20 LEVEL CONTROL PWR CT-6 H20 LEVEL CONTROL PWR	E-1.1, E-2.2,2.3	65P EXTND ABOVE GRADE AS 265P IN YARD

REGISTERED PROFESSIONAL ENGINEER FREDERICK W. MOCCETTI No. E011140 Exp. 6/30/13 ELECTRICAL STATE OF CALIFORNIA

NO.	DATE	REVISIONS
1	5/10/11	REVISED PER PLAN CHECK COMMENTS
3	11/04/11	PLAN CHECK SET
4	07/01/12	ISSUE FOR PLAN CHECK

DE SOLUTIONS
732 Val Sereno Drive
Encinitas, CA 92024
858/832-1242 Fax: 858/756-9891

ENERGY-TECH CONSULTANTS
1166 Oakmont Place
Nipomo, CA 93444
(760) 532-3573

SMUD
SACRAMENTO MUNICIPAL UTILITY DISTRICT

DESIGNED: FWK
DRAWN: FWK
APPROVED: SMUD
DATE: JAN 06, 2011
SCALE: NONE

300KW CHP MICROGRID

CONDUIT AND CABLE SCHEDULE

JOB NO.

SHEET NO. E-1.6 OF SHEETS

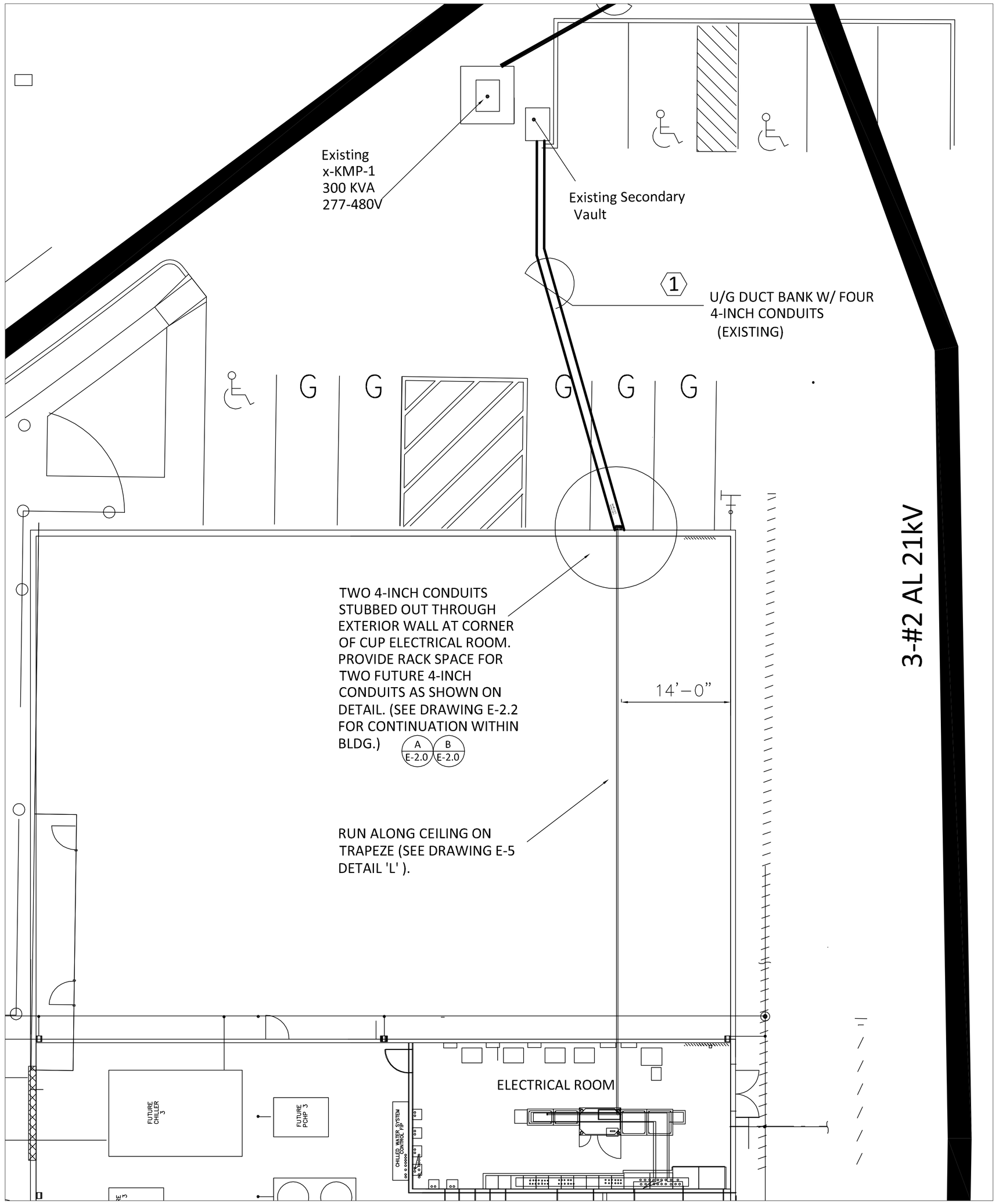

AREA PLAN
E-2.0
SCALE: 1/8"= 1'-0"

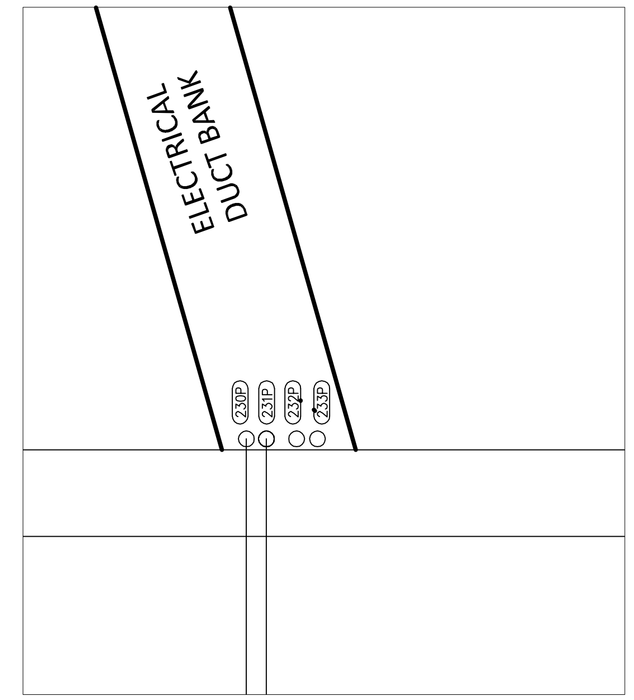

A E-2.0 CONDUIT PENETRATIONS
PLAN VIEW N.TS.

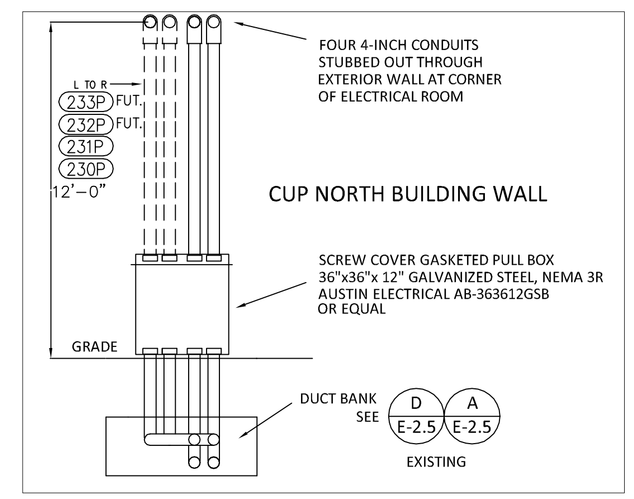

B E-2.0 CONDUIT PENETRATIONS
ELEVATION VIEW N.T.S.

SHEET NOTES -- DRAWING E-2.0

1. CONTRACTOR SHALL SUPPLY AND INSTALL CONDUCTORS IN EXISTING DUCT BANK. CONNECT TOMICROGRID SWITCHBOARD, (SEE SHEET E-1.1) AND COIL 25 FEET LENGTH OF THE PHASE CONDUCTORS AND GROUND WITHIN VAULT FOR LATER TERMINATIONS BY SMUD.

REGISTERED PROFESSIONAL ENGINEER
FREDERICK W. WOLFENTIG
No. E011140
Exp. 6/30/11
ELECTRICAL
STATE OF CALIFORNIA

NO.	DATE	REVISIONS
4	6/4/12	ISSUE FOR PLAN CHECK

DE SOLUTIONS
732 Val Sereno Drive
Encinitas, CA 92024
858/832-1242 Fax: 858/756-9891

ENERGY-TECH CONSULTANTS
1166 Oakmont Place
Nipomo, CA 93444
(760) 532-3573

SMUD
SACRAMENTO MUNICIPAL
UTILITY DISTRICT

DESIGNED:	FWK
DRAWN:	FWK
APPROVED:	SMUD
DATE:	JAN 06, 2011
SCALE:	AS NOTED

300KW CHP MICROGRID

ELECTRICAL POWER SITE PLAN
FRF U/G FEEDER ROUTE

JOB NO.

SHEET NO.
E-2.0
OF SHEETS

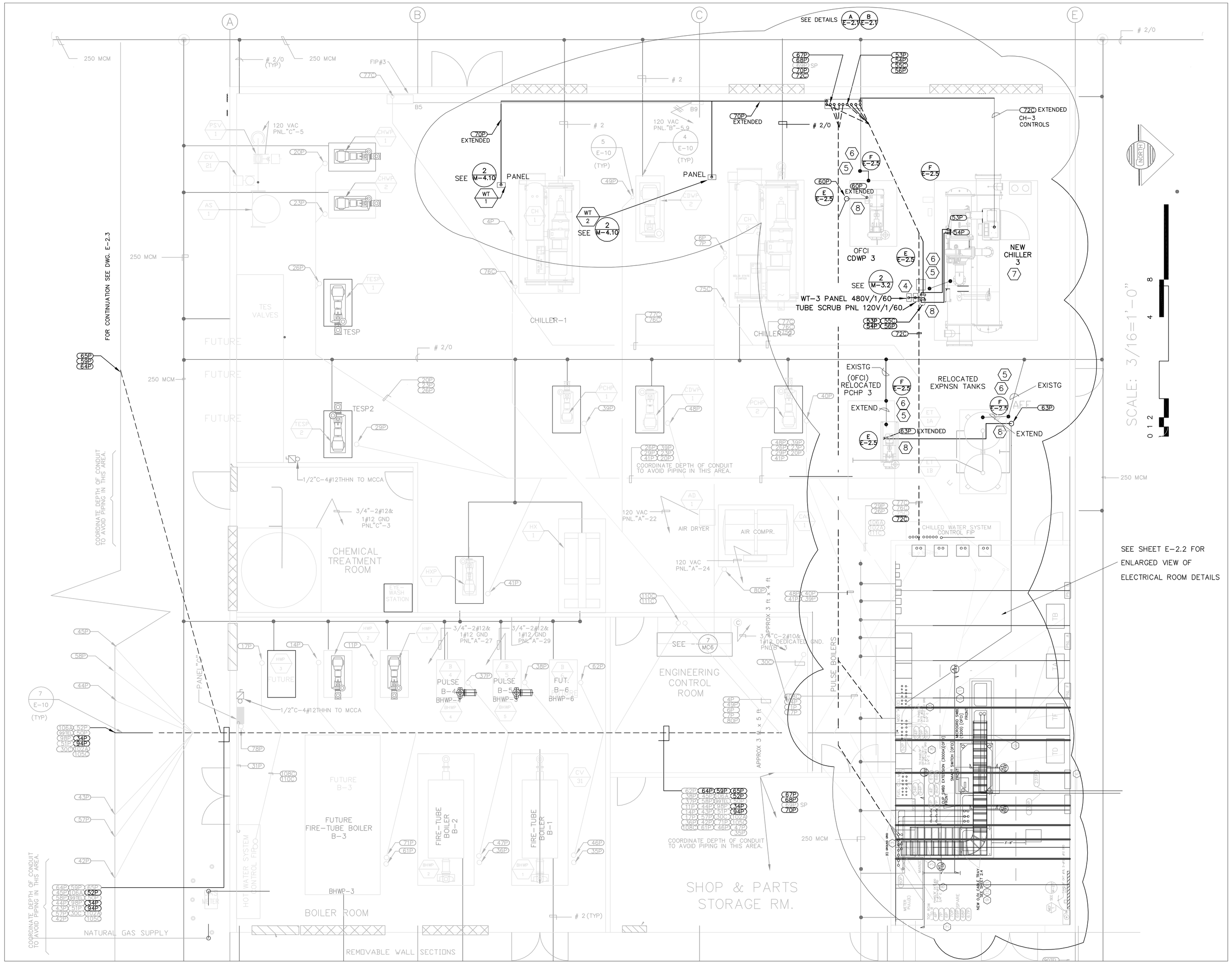

E-2.1 CENTRAL UTILITY PLANT BLDG.

SCALE: 3/16"= 1'-0"

SHEET NOTES – DRAWING E-2.1

1 (GENERAL NOTE) WORK UNDER MICROGRID GENERATION PROJECT GENERALLY SHOWN IN HEAVY BLACK WITHIN CLOUDED AREA. NOTE: ALTHOUGH IT IS BELIEVED THAT THESE DRAWING ACCURATELY DEPICT AVAILABLE AND SPARE CONDUITS THAT ARE TO BE USED FOR THE PROJECT, THE ELECTRICAL CONTRACTOR SHALL CONFIRM THE LOCATION AND AVAILABILTY OF ALL EXISTING AND SPARE CONDUITS, MATERIALS, ETC., THAT ARE SHOWN ON THE PROJECT DRAWINGS TO BE UTILIZED AS PART OF THIS PROJECT PRIOR TO PROCEEDING WITH CONTRUCTION. ANY CONFLICTS OR INACCURACIES FOUND TO EXIST BETWEEN THESE DRAWING AND EXISTING CONDITIONS THAT MAY MATERIALLY AFFECT THE PROJECT SHALL BE IMMEDIATELY BROUGHT TO THE ATTENTION OF THE OWNER OR OWNER'S REPRESENTATIVE PRIOR TO PROCEEDING FURTHER WITH CONSTRUCTION.

2 (GENERAL NOTE) SEE SHEET E-2.2 FOR ELECTRICAL ROOM DETAILS.

3 (GENERAL NOTE) EXCEPT AS INDICATED AS NEW, ALL CONDUITS IN CENTRAL UTILITY PLANT (CUP) BUILDING ELECTRICAL ROOM ARE EXISTING.

4 WHERE ROUTING POWER AND CONTROL CONDUITS ABOVE EQUIPMENT AND PIPING NEAR ROOF, SEE DETAIL'L', SHEET E-2.5 FOR TRAPEZE SUSPENSION/SUPPORT METHOD. COORDINATE EXACT ROUTING WITH OWNER TO MINIMIZE BENDS AND INTERFERENCES.

5 DRAWING DEPICTS BEST AVAILABLE INFORMATION OF EXISTING EQUIPMENT GROUND CONDUCTOR WITHIN C.U.P AND THE SURROUNDING EXTERIOR AREA, CONTRACTOR MUST VARIFY ALL EXISTING EQUIPMENT GROUNDING CONDUCTORS PRIOR TO BIDDING FOR CONSTRUCTION CONTRACT.

6 CONTRACTOR MUST PROVIDE GROUNDING TIE-INS TO EXISTING GROUND GRID FOR ALL NEW MECHANICAL, ELECTRICAL AND STRUCTURE ITEMS.

7 CHILLER #3 STARTER IS INCLUDED WITH NEW CHILLER SKID. TO MINIMIZE NEED FOR NEW UNDERGROUND DUCT BANKS WITIN CUP BUILDING, USE ORIGINALLY ALLOCATED CHILLER STARER CONDUITS STUB UP LOCATIONS SHOWN AS PULL LOCATION. CONTRACTRO SHALL INSTALL PULL BOXES TO PROVIDE FOR TRANSITIONING BETWEEN EXISTING CONDUITS SHOWN. SEE ALSO ONE-LINE DIAGRAM, E-1.1.

8 ELECTRICAL SHALL COORDINATE WITH MECHANICAL FOR ROUTING AND SUPPORTING OF CONDUITS FROM STUB-UP LOCATIONS TO FINAL CONNECTION POINTS AT EQUIPMENT POWER AND CONTROL JUNCTION BOXES. SEE MECHANICAL SHEET M-3.2 DETAILS 1 THROUGH 4 FOR STRUCTURAL METHODS FOR SUPPORTING PIPES AND CONDUITS.

GENERAL GROUNDING NOTES

- SEE GROUNDING DETAILS SHEET E-2.5.
- NEW GROUND CONDUCTORS SHALL BE BURIED 30 INCHES MINIMUM BELOW GRADE.
- TAPS ON MAIN GROUND CONDUCTOR SHALL BE MADE WITH EXOTHERMIC WELDS AND ALL EXPOSED COPPER COVERED WITH SCOTCH #33 TAPE.
- ALL POWER AND LIGHTING CIRCUITS SHALL CARRY A GROUND CONDUCTOR SIZED PER CEC REQUIREMENTS.
- MAIN GROUND LOOP CONDUCTOR EXTENSIONS SHALL BE 250 KCMIL COPPER WITH #2 TAPS UNLESS OTHEWISE NOTED.

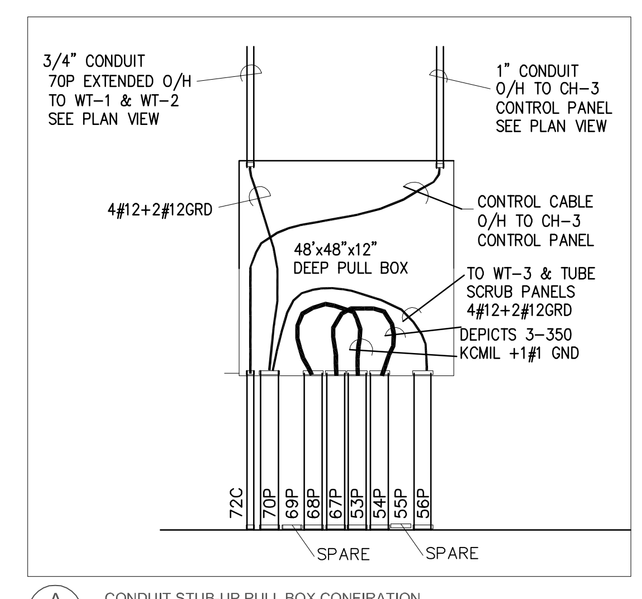

A E-2.1 CONDUIT STUB-UP PULL BOX CONFIRATION
SCALE: 1/2"= 1'-0"

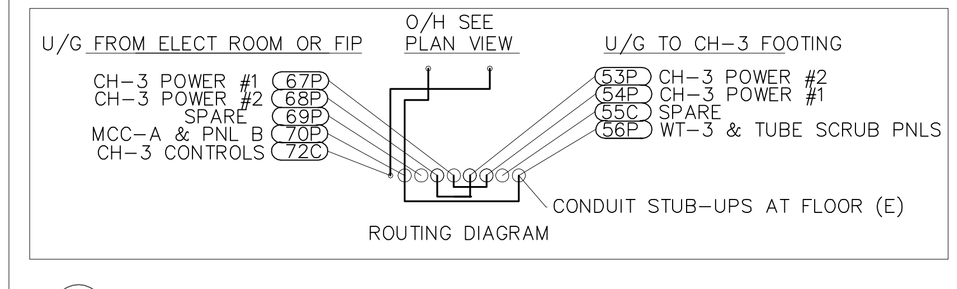

B E-2.1 CONDUIT STUB-UP CONDUIT CIRCUIT ALLOCATIONS AND ROUTE KEY
SCALE: NONE

REGISTERED PROFESSIONAL ENGINEER — FREDERICK W. KOCHERT — No. E011140 Exp. 6/30/13 — ELECTRICAL — STATE OF CALIFORNIA

NO.	DATE	REVISIONS
4	07/01/12	ISSUE FOR PLAN CHECK

DE SOLUTIONS
732 Val Sereno Drive
Encinitas, CA 92024
858/832-1242 Fax: 858/756-9891

ENERGY-TECH CONSULTANTS
1166 Oakmont Place
Nipomo, CA 93444
(760) 532-3573

SMUD
SACRAMENTO MUNICIPAL UTILITY DISTRICT

DESIGNED:	FWK
DRAWN:	FWK
APPROVED:	SMUD
DATE:	JAN 06, 2011
SCALE:	AS NOTED

300KW CHP MICROGRID

CENTRAL UTILITY PLANT ELECTRICAL PLAN

JOB NO.

SHEET NO. E-2.1 OF SHEETS

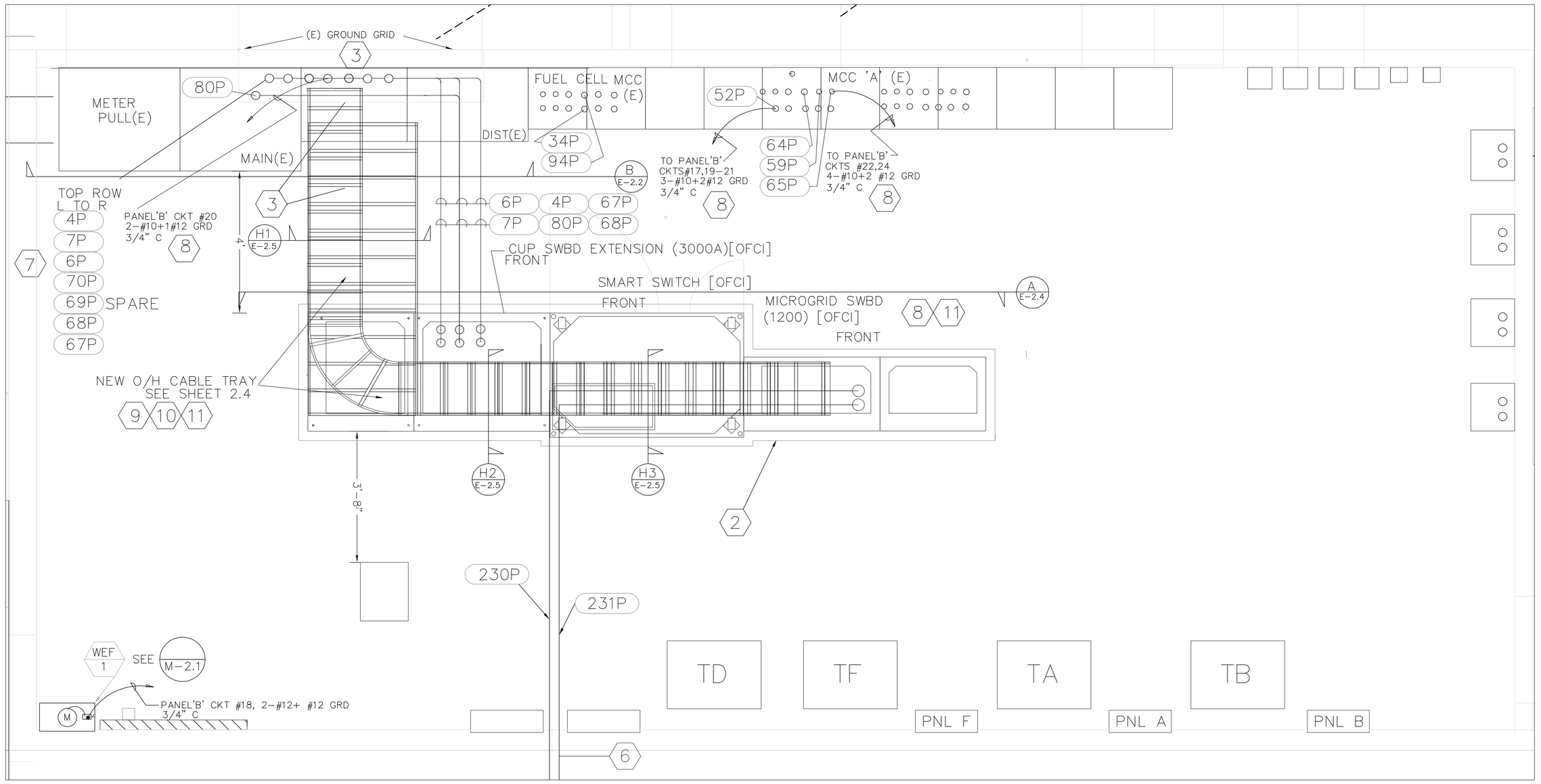

ELECTRICAL ROOM PLAN

SCALE: 1/2"= 1'-0"

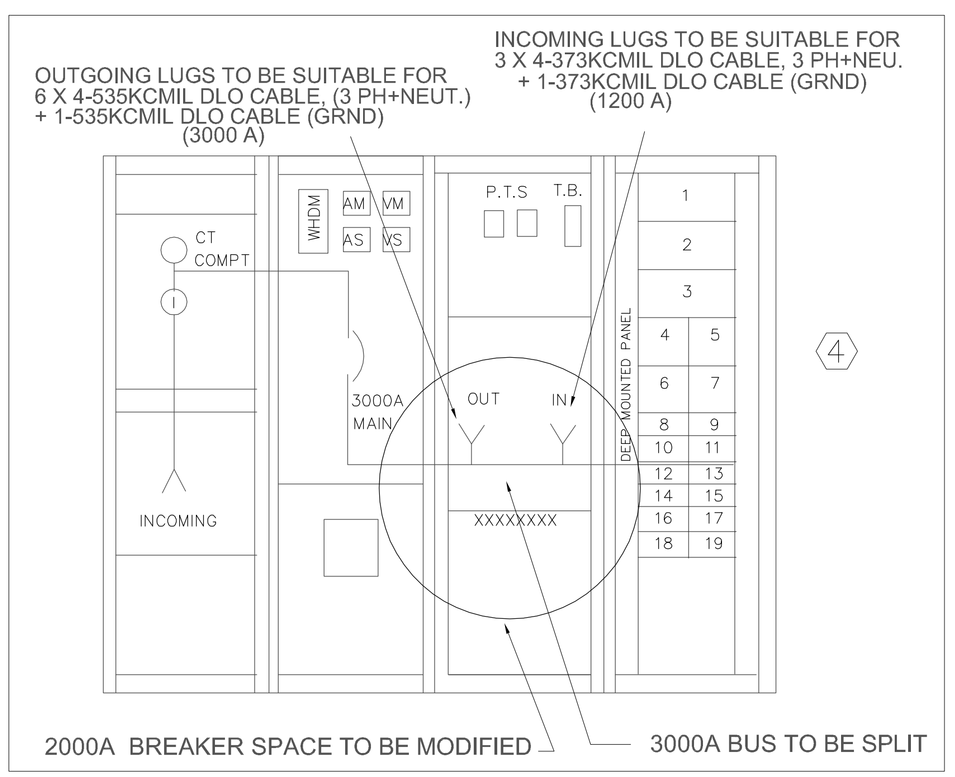

EXISTING MAIN SWITCHBOARD- ELEVATION VIEW

SCALE: NONE

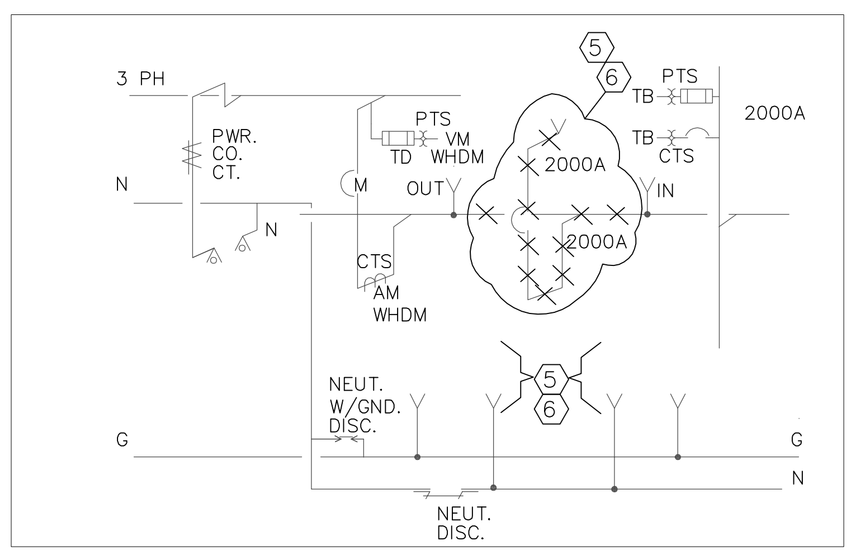

EXISTING MAIN SWBD- BUS MODIFICATION SCHEMATIC

SCALE: NONE

SHEET NOTES DRAWING E-2.2

1. (GENERAL NOTE) CONTRACTOR MUST REVIEW, CONFIRM OR ADJUST ACTUAL WORKABLE DIMENSIONS OF NEW EQUIPMENT BASED UPON THE FINAL APPROVED DRAWINGS SUPPLIED WITH THE ACTUAL EQUIPMENT SUPPIED OR THE PROJECT.
2. CONTRACTOR SHALL PROVIDE A FIVE INCH HIGH CONCRETE HOUSEKEEPING PAD THAT SHALL EXTEND THREE INCHES OUTWARD IN ALL DIRECTION FROM THE BASE OF ALL NEW EQUIPMENT AS ILLUSTRATED ON DRAWINGS.
3. GROUND LOOP SHALL BE EXTENDED INSIDE CABLE TRAY AND TIED DIRECTLY TO EXISTING GROUND GRID AT TWO LOCATIONS WITHIN EXISTING SWITCHBOARD. EXTENSION TIE POINT SHALL NOT BE TO EQUIPMENT.
4. CONTRACTOR SHALL MODIFY BUSWORK IN DISTRIBUTION SECTION OF EXISTING GENERAL ELECTRIC SWITCHBOARD TO ACCOMMODATE SPLITING BUS DOWNSTREAM OF EXISTING 3000 AMPERE MAIN BREAKER. SEE DETAILS B AND C WHICH SCHEMATICALLY ILUSTRATES THIS REQUIREMENT. WORK MUST BE PERFORMED IN ACCORDANCE WITH CALIFORNIA ELECTRICAL CODE AND ALL APPLICABLE ANSI AND UL STANDARDS. CONTRACTOR MUST EMPLOY SERVICES OF FACTORY QUALIFIED REPRESENTATIVE TO PERFORM THIS WORK. CONTRACTOR MUST OBTAIN APROVAL AND ACCEPTANCE OF COMPLIANCE OF THE DESIGN AND INSTALLATION BY THE AUTHORITY HAVING JURISDICTION. INSTALLATION SHALL NOT COMPROMISE NOR DIMINISH THE INTEGRITY OR SAFETY OF THE EQUIPMENT NOR ELECTRICAL WITHSTAND RATINGS.
5. SEE SHEET E-2.1 FOR EXTENSION FOR CONDUITS WITHIN CENTRAL PLANT BUILDINGS.
6. CIRCUIT FROM SWITCHBOARD 'MGB' TO SERVE FRF STEP-UP TRANSFORMER SHALL BE ROUTED OVERHEAD AT CEILING WITHIN ELECTRICAL ROOM. SEE DRAWING E-2.0 FOR CONTINUATION OF CIRCUIT.
7. THESE EXISTING CONDUITS AND CIRCUITS TO BE EXTENDED UP THROUGH CUP MAIN SWITCHBOARD OVERHEAD TO NEW MAIN SWBD EXTENSION. CONDUITS MUST BE EXTENDED UP THROUGH EXISTING SWITCHGEAR OR MCC AS SEPARATE INTEGRAL RACEWAY.
8. CIRCUITS FROM PANEL 'B' SHALL BE ROUTED TO SWITCHBOAD OR MCC AS INDICATED ON DRAWINGS AND THEN JOINED WITHIN DESIGNATED EXISTING UNDERFLOOR CONDUIT RACEWAYS WITH OTHER CIRCUITS AS SHOWN AND LISTED ON CONDUIT AND CABLE SCHEDULE, SHEET E-1.6. ALL SUCH CIRCUITS WHEN ROUTED DOWN WITHIN THE MCC OR SWITCHBOARD SHALL BE ROUTED WITHIN CONDUITS (NO LOOSE WIRING SHALL BE PERMITTED). ADD PRINTED LABLE USING ½ INCH HIGH LETTERING TO THE FRONT OF AFFECTED PANELS: "CAUTION THIS EQUIPMENT CONTAINS FOREIGN VOLTAGE CIRCUITS"
9. SEE SHEETS E-2.4 AND E-2.5 FOR STRUCTURAL SUPPORTING REQUIREMENTS FOR OVERHEAD CABLE TRAY.
10. CONTRACTOR SHALL MODIFY AND RELOCATE LIGHTING AS NECESSARY TO REMOVE INTERFERENCES WITH CABLE TRAY.
11. NEW OVERHEAD CABLE TRAY TO BE INSTALLED TO SUPPORT CIRCUITS 201P,202P 203P AND 204P ONLY
12. GENERAL NOTE) SWITCHBOARDS AND SMART SWITCH AND BECKWITH M3410A RELAY DESIGNATED AS OWNER FURNISHED, CONTRACTOR INSTALLED [OFCI], ARE SUPPLIED BY SMUD.
13. (GENERAL NOTE) EXISTING SMUD DRAWING E-4 PROVIDES ADDITIONAL IDENTIFICATION OF EXISTING STUB-UPS OF ELECTRICAL CONDUIT WITHIN THE ELECTRICAL ROOM. CONTRACTOR MUST CONFIRM ACCURACY OF ALL LOCATIONS OF ALL EXISTING CONDUITS THAT ARE TO BE ACTIVATED FOR THIS PROJECT. LOCATIONS INDICATED ARE BEST AVAILABLE INFORMATION BUT OR NOT VERIFIED.

REGISTERED PROFESSIONAL ENGINEER — FREDERICK W. KRUMPETT — No. E011140 Exp. 6/30/13 — ELECTRICAL — STATE OF CALIFORNIA

NO.	DATE	REVISIONS
1	5/10/11	REVISED PER PLAN CHECK COMMENTS
3	11/4/11	PLAN CHECK SET
4	07/01/12	ISSUE FOR PLAN CHECK

DEI SOLUTIONS
732 Val Sereno Drive
Encinitas, CA 92024
858/832-1242 Fax: 858/756-9891

ENERGY-TECH CONSULTANTS
1166 Oakmont Place
Nipomo, CA 93444
(760) 532-3573

SMUD
SACRAMENTO MUNICIPAL UTILITY DISTRICT

DESIGNED: FWK
DRAWN: FWK
APPROVED: SMUD
DATE: JAN 06, 2011
SCALE: AS NOTED

300KW CHP MICROGRID

CUP ELECTRICAL ROOM
ELECTRICAL PLAN & ELEVATIONS

JOB NO.
SHEET NO. E-2.2
OF SHEETS

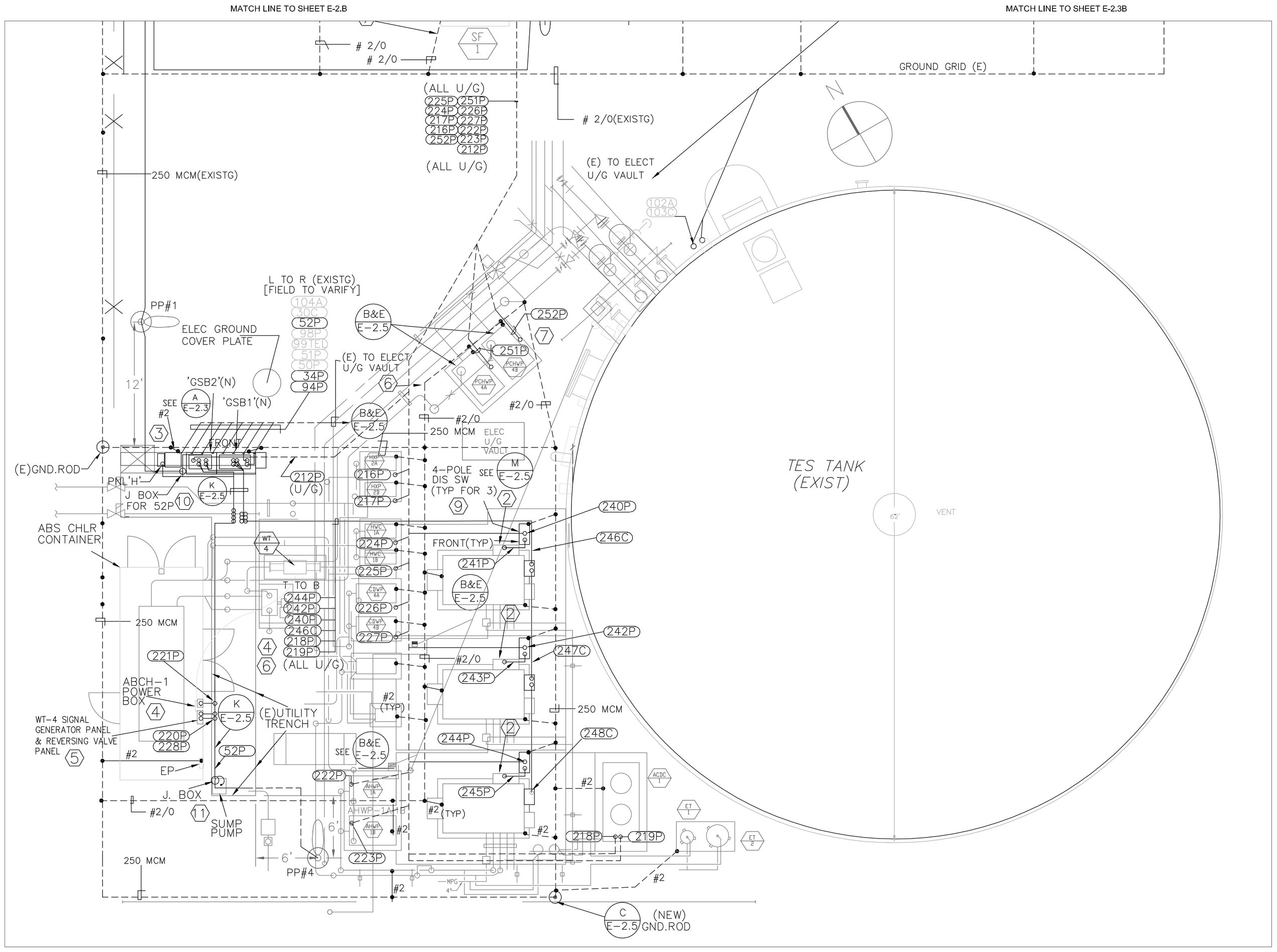

E-2.3 EQUIPMENT YARD PLAN - ELECTRICAL
SCALE: 3/16" = 1'-0"

SHEET NOTES DRAWING E-2.3

1. (GENERAL NOTE) ELECTRICAL CONTRACTOR SHALL VERIFY EXACT LOCATION OF ALL STUBUP CONDUIT & DEVICES SHOWN ON DRAWINGS WITH THE CERTIFIED EQUIPMENT MANUFACTURERS DRAWINGS. SMUD DRAWINGS FOR 'TEST CENTER AT CENTRAL PLANT': CP-SK2, F-952-3026, CIV-SK3A AND CIV-SK4A SHOULD BE USED FOR REFERENCE AND PROVIDE BEST AVAILABLE INFORMATION OF ELECTRICAL WORK PREVIOUSLY PERFORMED IN THE CENTRAL PLANT PAD AREA. CONTRACTOR MUST REVIEW THESE DRAWINGS IN SUPPORT OF THE WORK TO BE PERFORMED UNDER MICROGRID PROJECT TO IDENTIFY EXISTING CONDUITS AND ELECTRICAL EQUIPMENT IN THE AREA. SEE ALSO DRAWING E-1.6, CONDUIT AND CABLE SCHEDULE, TO IDENTIFY EXISTING CONDUITS TO BE REUSED FOR THIS PROJECT.
2. PROVIDE 42 INCHES MINIMUM CLEARANCE IN FRONT OF GENERATOR PANELSTO PIPING TO ASSURE NEC COMPLIANCE.
3. NEW MICROGRID GENERATION SWITCHBOARD, 'GSB' (MCC), SHALL REPLACE THE REMOVED AND DEMOLISHED MICROTURBINE GENERATOR CENTROL CENTER AT LOCATION SHOWN ON DRAWING. FASTEN NEW GSB'S IN PLACE IN LIKE MANNER.
4. ROUTE FEEDER CONDUITS TO ELECTRICAL EQUIPMENT FOR NEW ABSORPTION CHILLER, PUMPS, AND FLUID COOLER EQUIPMENT SUPPORTED BY SUPERSTRUCT WITH PIPING AT GRADE WHERE AVAILABLE AND ON UNISTRUCT OF EXISTING UTILITY TRENCH AND IN NEW UNDERGROUND DUCTS WHERE INDICATED. ROUTE FEEDERS FOR GENERATORS, AND CHWP1A &1B UNDERGROUND FROM EXISTING UTILITY TRENCH TO THOSE EQUIPMENT STUB-UP LOCATIONS. SEE MECHANICAL EQUIPMENT DRAWINGS FOR EXACT LOCATIONS FOR FINAL STUB-UPS AT EQUIPMENT. SEE APPLICABLE DETAILS SHEET E-2.5.
5. PROVIDE POWER CIRCUITING IN SUPPORT OF MECHANICAL FOR WATER TREAMENT UNIT, WT-4 SIGNAL GENERATOR PANEL AND REVERSING VALVE AND ROUTING OF EMBILICAL FROM ABCH-1 TO COMPLETE ALL INTERCONNECT AND RELATED POWER SUPPLY REQUIREMENTS.
6. COORDINATE THE TOP DEPTH OF THE ELECTRICAL DUCTBANKS TO AVOID MECHANICAL TRENCH.
7. SEE GENERAL GROUNDING NOTES SHEET E-2.1 FOR EXTENSION OF GROUNDING GRID FOR ALL ELECTRICAL, MECHANICAL AND STRUCTURAL EQUIPMENT GROUNDING.
8. EXACT LOCATIONS OF EXISTING STUB-UP CONDUITS 59P, 64P AND 65P MUST BE DETERMINED BY CONTRACTOR. INSTALL PULL ELBOW FITTINGS AT STUB UP AND EXTEND AS 259P, 264P AND 265P CONDUITS FOR SF-1, CT-5, AND CT-6 AT GRADE ON SUPERSTRUCT TO THEIR RESPECTIVE ELECTRICAL CONNECTION POINTS. SEE MECHANICAL EQUIPMENT DRAWINGS FOR EXACT LOCATIONS FOR FINAL STUB-UPS AT EQUIPMENT.
9. HEAVY DUTY, NEMA 3R SAFETY SWITCH, NON-FUSIBLE, 600 VOLT, 200AMPERE, FOUR POLE/BLADE, 3 REQUIRED.
10. INSTALL WEATHER PROOF JUNCTION BOX ABOVE GRADE AT GSB-2 FOR SPLITING OUT AND EXTENDING PANEL B CIRCUITS 17 AND 19-21 TO SERVE YARD LIGHTING AND SUMP PUMP RESPECTIVELY. SEE PANEL B SCHEDULE , SHEET E-2.5 AND CABLE AND CONDUIT SCHEDULE, SHEET 1.6.
11. SUMP PUMP OWNER SUPPLIED, CONTRACTOR INSTALLED. PROVIDE WP JUNCTION BOX IN UTILITY TRENCH TWO INCHES BELOW TRENCH GRATE. USE WATERTIGHT TWIST LOCK CONNECTOR AND PLUG ASSEMBLY. SUSPEND CONNECTOR FROM JUNCTION BOX WITH STRAIN RELIEF. CONNECT PLUG TO THE TEN FOOT CORD SUPPLIED WITH PUMP. HUBBELL TWIST LOCK WATERTIGHT SAFTY SHROUD TYPE HBL2323SW CONNECTOR BODY AND HBL2321SW PLUG, 20 AMPERE, 250 VOLTS, 2 POLE, 3 WIRE GROUNDING, NEMA L6-20P.
12. PROVIDE POWER CIRCUITING IN SUPPORT OF MECHANICAL FOR COOLING TOWER CT-5 AND CT-6 FOR VIBRATION ISOLATOR, SUMPHEATER AND LEVEL CONTROL SEE BALTIMAORE AIRCOIL DRAWINGS FURNISHED BY MECHANICAL TO COMPLETE ALL INTERCONNECT AND POWER SUPPLY REQUIREMENTS.

REGISTERED PROFESSIONAL ENGINEER FREDERICK W. KOCHETTO No. E011140 Exp. 6/30/13 ELECTRICAL STATE OF CALIFORNIA

NO.	DATE	REVISIONS
3	11/04/11	PLAN CHECK SET
4	6/4/12	ISSUE FOR PLAN CHECK

DE SOLUTIONS
732 Val Sereno Drive
Encinitas, CA 92024
858/832-1242 Fax: 858/756-9891

ENERGY-TECH CONSULTANTS
1166 Oakmont Place
Nipomo, CA 93444
(760) 532-3573

SMUD
SACRAMENTO MUNICIPAL UTILITY DISTRICT

DESIGNED: FWK
DRAWN: FWK
APPROVED: SMUD
DATE: JAN 06, 2011
SCALE: AS NOTED

300KW CHP MICROGRID

CENTRAL PLANT EXTERIOR POWER AND GROUNDING PLAN

JOB NO.

SHEET NO. E-2.3A

OF SHEETS

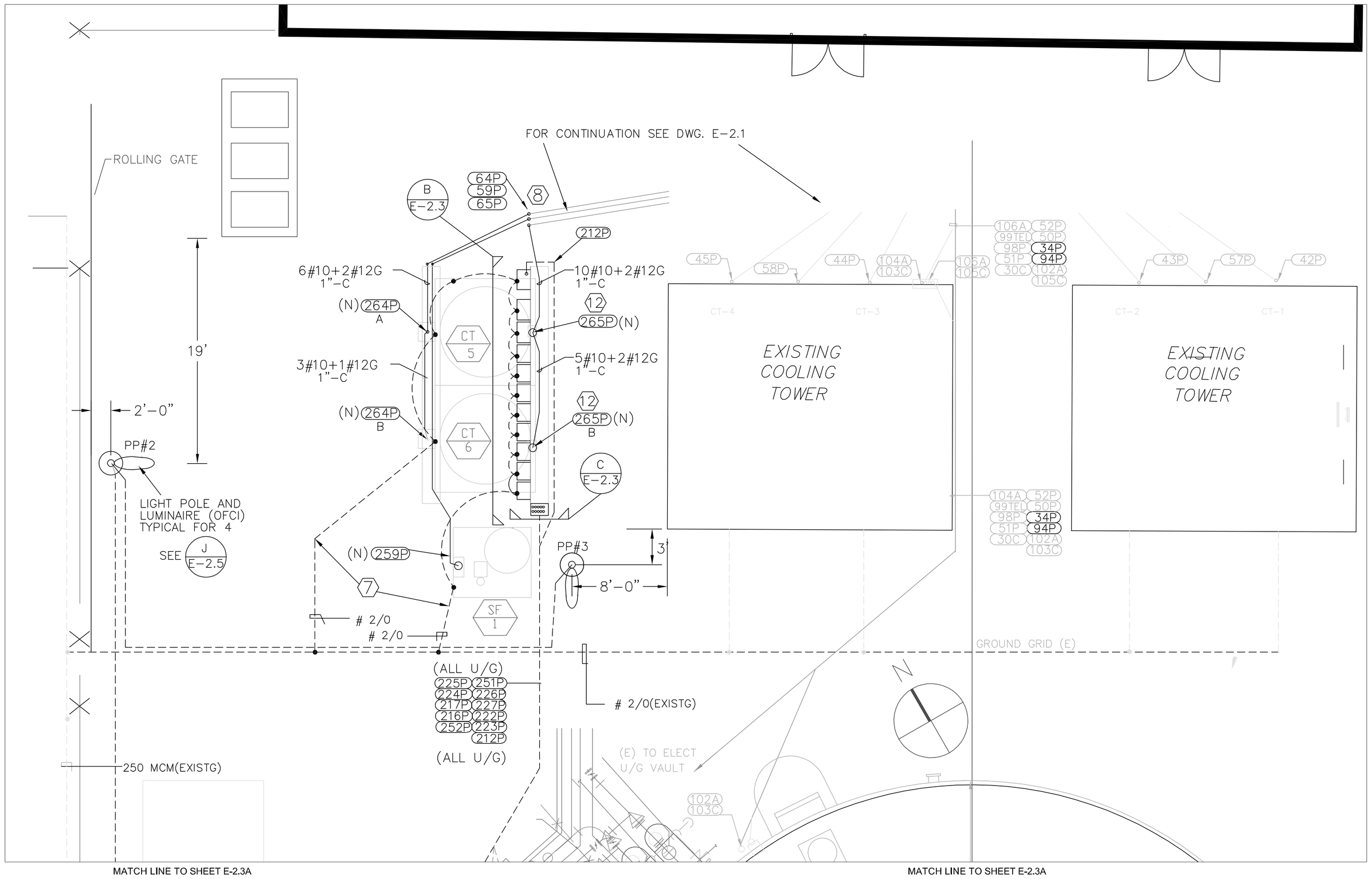

E-2.3 EQUIPMENT YARD PLAN - ELECTRICAL
SCALE: 3/16" = 1'-0"

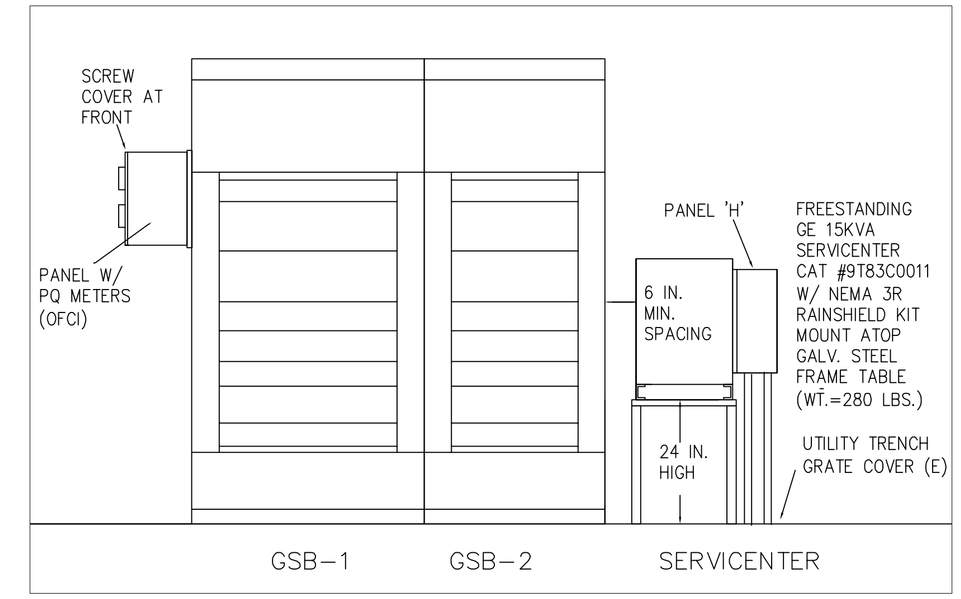

FRONT ELEVATION VIEW

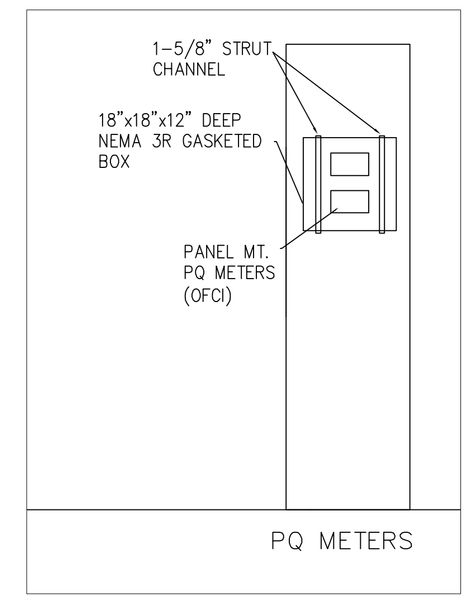

SIDE ELEVATION VIEW

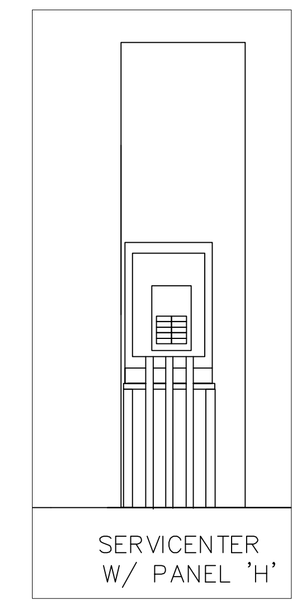

SIDE ELEVATION VIEW

A E-2.3 GSB-1, GSB-2 AND METERING ASSEMBLY
SCALE: 1/2" =1'-0"

SEE SHEET E-2.3A FOR CONSTRUCTION NOTES

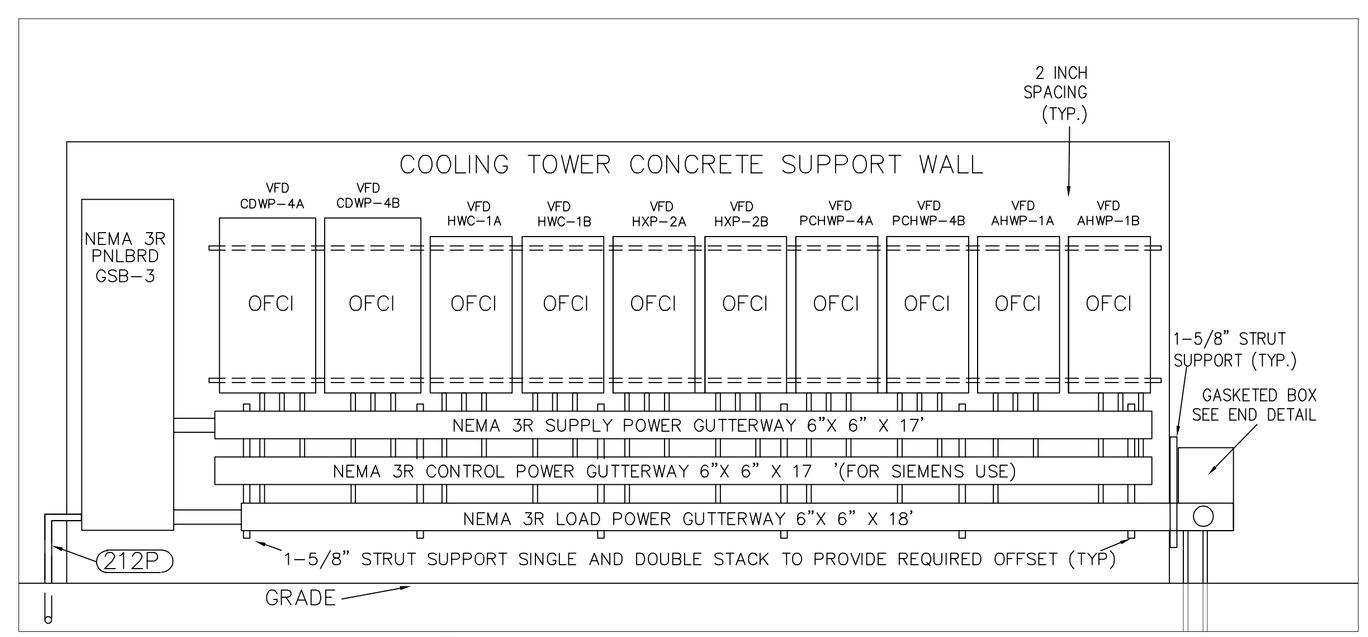

B E-2.3 GSB-3 & VFDS COOLING TOWER SUPPORT WALL MOUNT
WEST ELEVATION VIEW SCALE: 1/2" =1'-0"

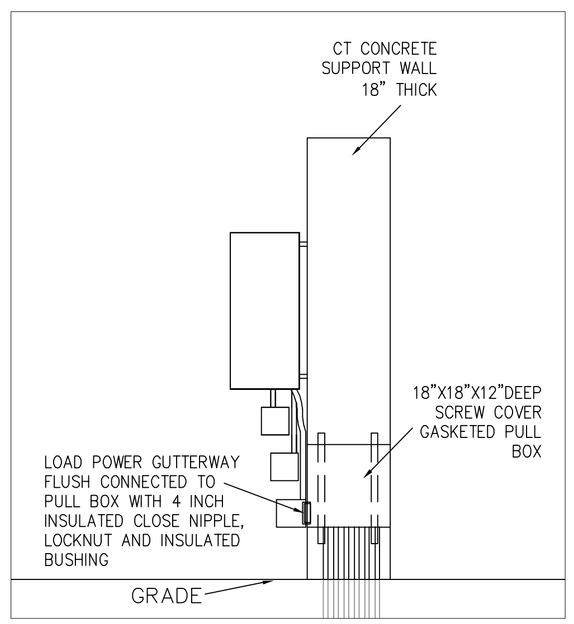

C E-2.3 GSB-3 & VFDS COOLING TOWER SUPPORT WALL MOUNT
NORTH ELEVATION VIEW SCALE: 1/2" =1'-0"

REGISTERED PROFESSIONAL ENGINEER FREDERICK W. AUGENSTEIN No. E011140 Exp. 6/30/13 ELECTRICAL STATE OF CALIFORNIA

NO.	DATE	REVISIONS
3	11/04/11	PLAN CHECK SET
4	07/0112	ISSUE FOR PLAN CHECK

DE SOLUTIONS
732 Val Sereno Drive
Encinitas, CA 92024
858/832-1242 Fax: 858/756-9891

ENERGY-TECH CONSULTANTS
1166 Oakmont Place
Nipomo, CA 93444
(760) 532-3573

SMUD
SACRAMENTO MUNICIPAL UTILITY DISTRICT

DESIGNED:	FWK
DRAWN:	FWK
APPROVED:	SMUD
DATE:	JAN 06, 2011
SCALE:	AS NOTED

300KW CHP MICROGRID

CENTRAL PLANT EXTERIOR POWER AND GROUNDING PLAN COOLING TOWERS AREA

JOB NO.

SHEET NO. E-2.3B

OF SHEETS

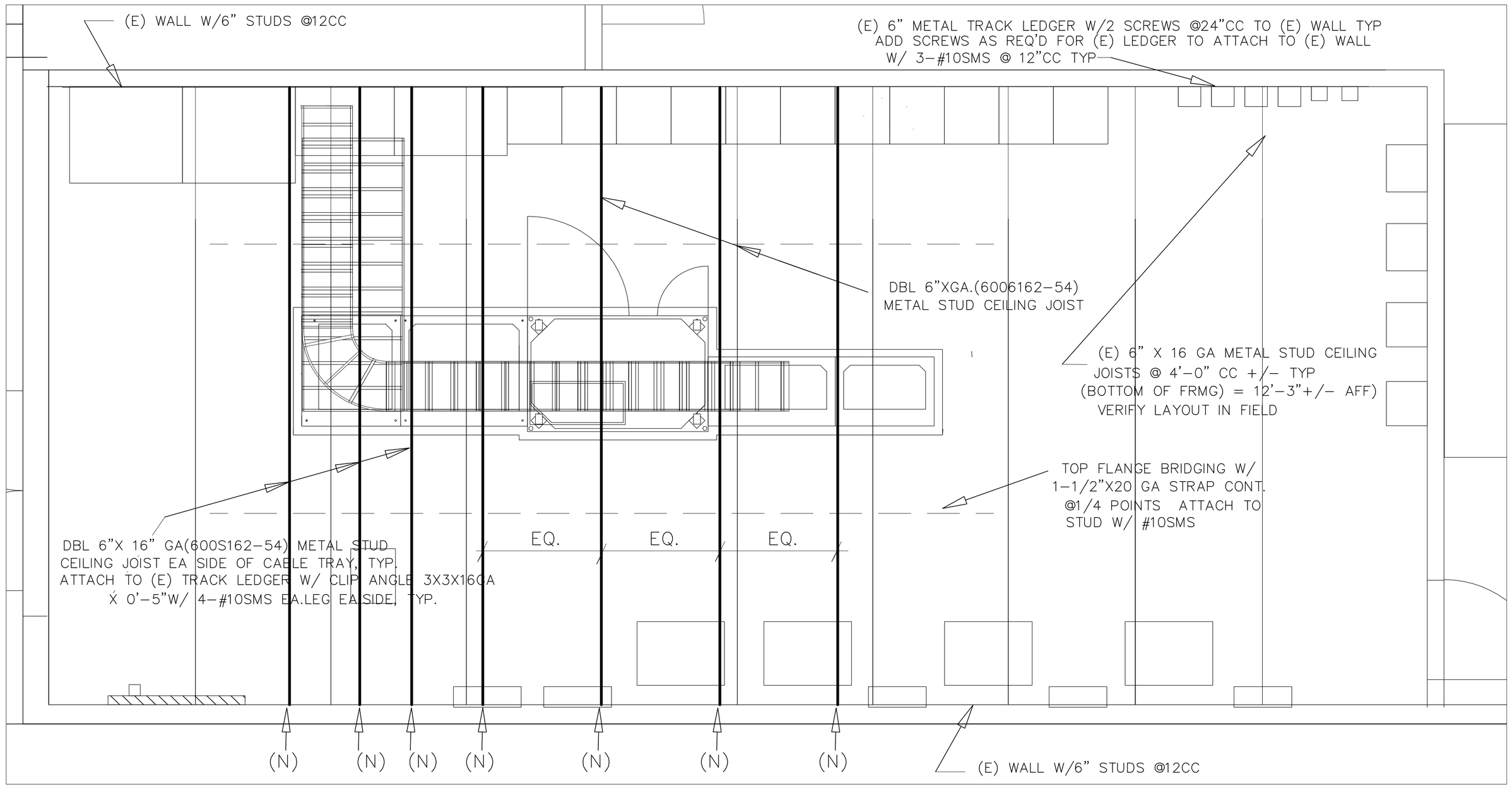

E-2.4 ELECTRICAL ROOM CABLE TRAY SUPPORT PLAN

SCALE: 1/2"= 1'-0"

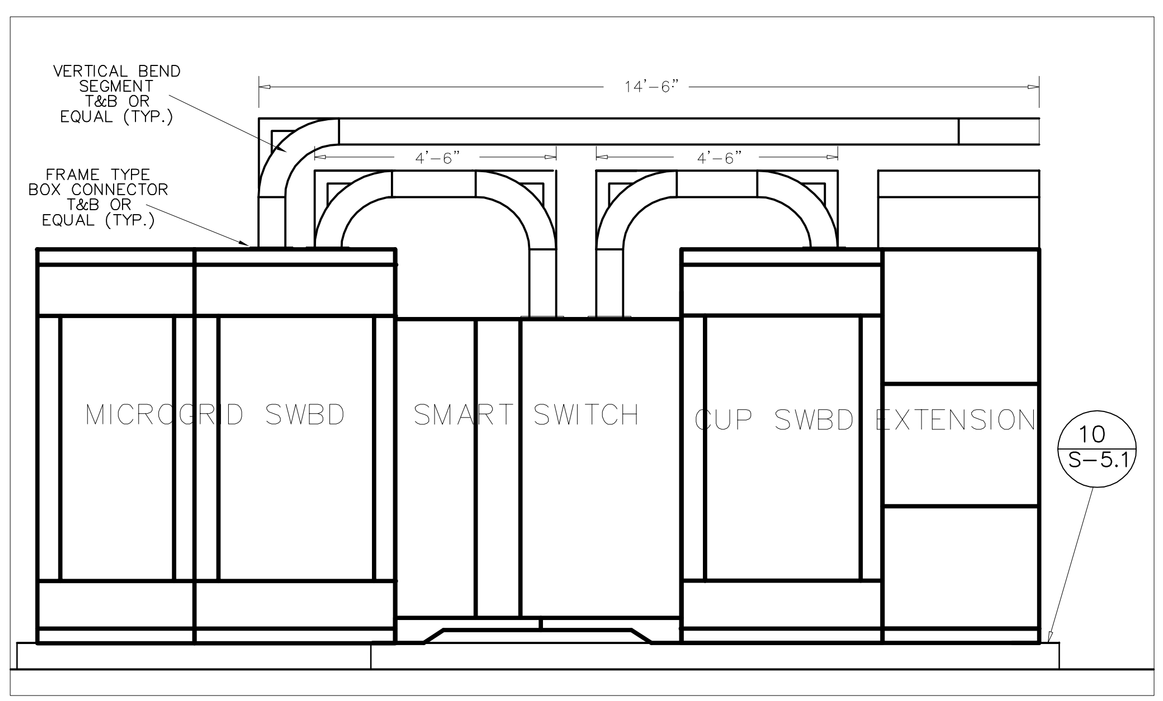

A1 E-2.4 NEW ELECTRICAL EQUIPMENT - FRONT ELEVATION VIEW

SCALE: 1/2"= 1'-0"

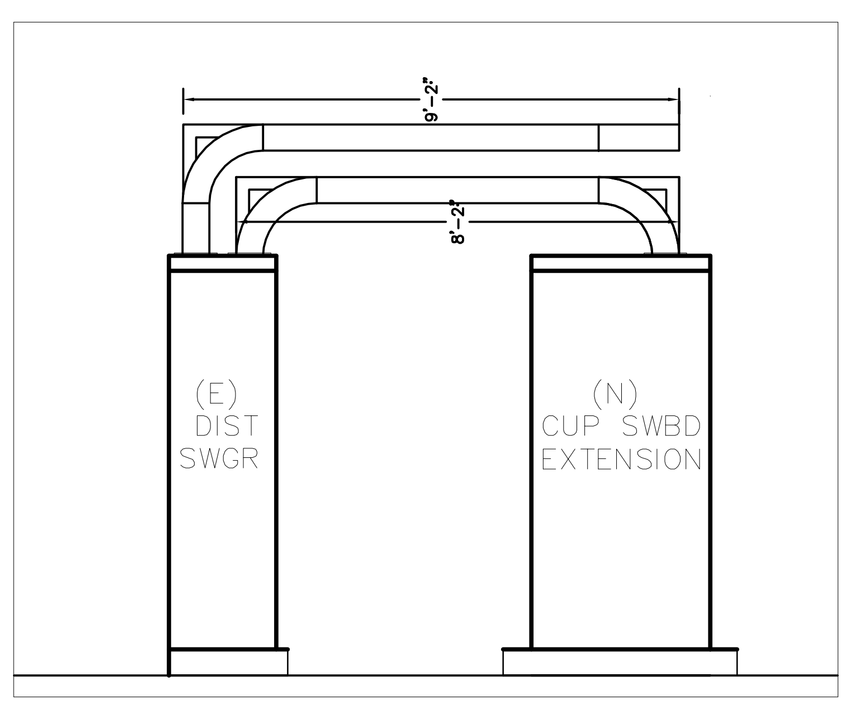

A2 E-2.4 NEW ELECTRICAL EQUIPMENT - WEST ELEVATION VIEW

SCALE: 1/2"= 1'-0"

SHEET NOTES DRAWING E-2.4

1. (GENERAL NOTE) SEE SHEET E-2.5 DETAIL 'G' FOR STRUCTURAL MOUNTING AND SUPPORT DETAILS. AND DETAIL H1,H2 AND H3 FOR CIRCUIT CONDUCTOR CONFIGURATIONS.
2. FOR CABLE ENTRY INTO THE SWTCHGEAR.USE12 INCH RADIUS HORIZONTAL TO VERTICAL BEND SEGMENT CABLE FITTING (THOMAS & BETTS PART NUMBER 'SHF' OR EQUAL) WITH FRAME TYPE BOX CONNECTOR AT TOP OF SWITCHGEAR ENTRY. SEE DETAILS 'A' AND 'B'.
3. DIMENSIONS SHOWN FOR CABLE TRAY ASSEMBLIES ARE APPROXIMATE ONLY. CONTRACTOR MUST FIELD VERIFY ALL DIMENSIONS

REGISTERED PROFESSIONAL ENGINEER
FREDERICK W. LUCHENTO
No. E011140
Exp. 6/30/13
ELECTRICAL
STATE OF CALIFORNIA

NO.	DATE	REVISIONS
1	5/10/11	REVISED PER PLAN CHECK COMMENTS
3	11/4/11	PLAN CHECK SET
4	07/01/12	ISSUE FOR PLAN CHECK

DE SOLUTIONS
732 Val Sereno Drive
Encinitas, CA 92024
858/832-1242 Fax: 858/756-9891

ENERGY-TECH CONSULTANTS
1166 Oakmont Place
Nipomo, CA 93444
(760) 532-3573

SMUD
SACRAMENTO MUNICIPAL
UTILITY DISTRICT

DESIGNED:	FWK
DRAWN:	FWK
APPROVED:	SMUD
DATE:	JAN 06, 2011
SCALE:	AS NOTED

300KW CHP MICROGRID

CUP ELECTRICAL ROOM
CABLE TRAY SUPPORT PLAN

JOB NO.

SHEET NO.
E-2.4
OF SHEETS

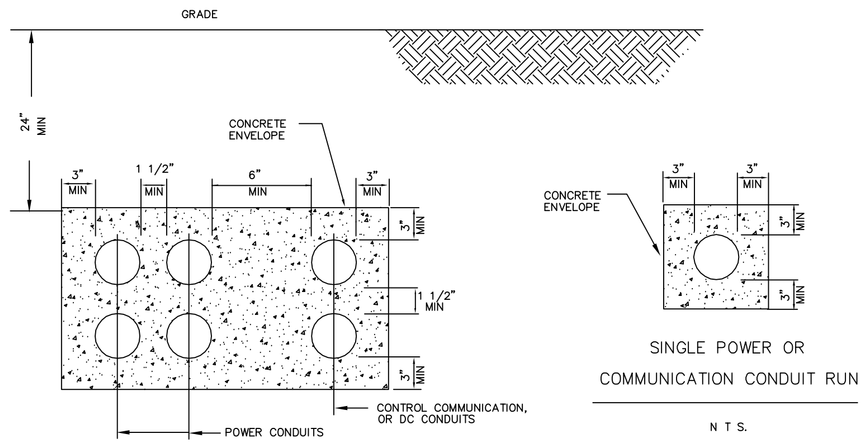

A / E-2.5 COMBINATION POWER & COMMUNICATION CONDUIT RUN

N T S.

DETAIL

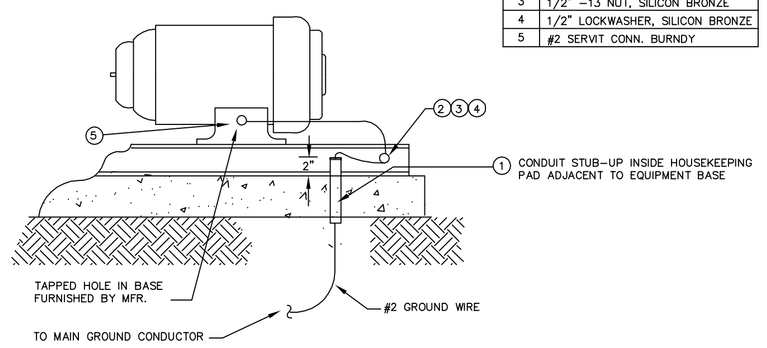

ITEM	DESCRIPTION
1	1" PVC CONDUIT, TYPE 40
2	#2 SERVIT CONN. BURNDY
3	1/2" -13 NUT, SILICON BRONZE
4	1/2" LOCKWASHER, SILICON BRONZE
5	#2 SERVIT CONN. BURNDY

B / E-2.5 MOTOR GROUNDING ASSEMBLY

DETAIL

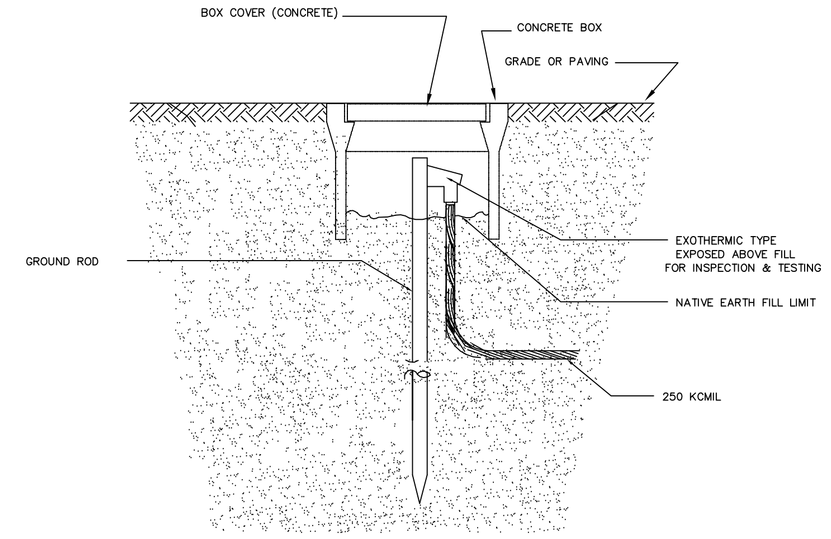

C / E-2.5 GROUND SYSTEM (CONCRETE COVER)

N T S.

DETAIL

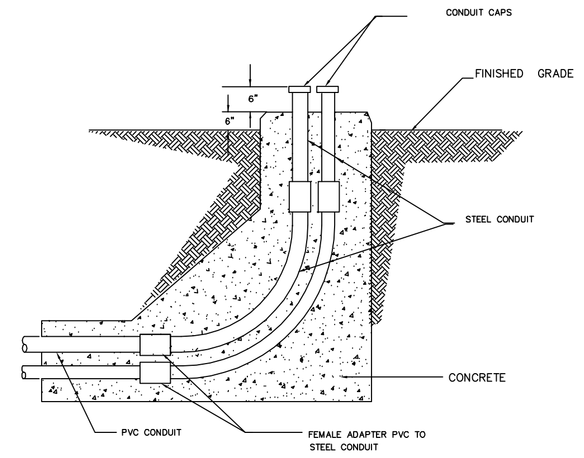

D / E-2.5 OUTDOOR & WET AREA CONDUIT TERMINATION

N T S.

DETAIL

ITEM	DESCRIPTION
1	FLEXIBLE CND. SEALTITE TYPE UA
2	FLEXIBLE CND. CONN. STRAIGHT TYP STB
3	CONDUIT FTG. APPLETON TYPE LB
4	CONDUIT, RIGID STEEL GALV.
5	CND. FTG. COVER, CAST MI. APPLETON K-CM
6	CND. FTG. COVER GASKET,NEOPRENE APP GK

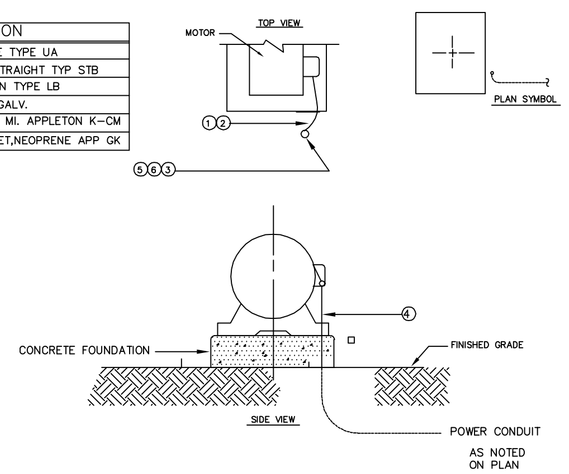

E / E-2.5 HORIZONTAL MOTOR-ONE UNDERGROUND CONDUIT

N T S.

DETAIL

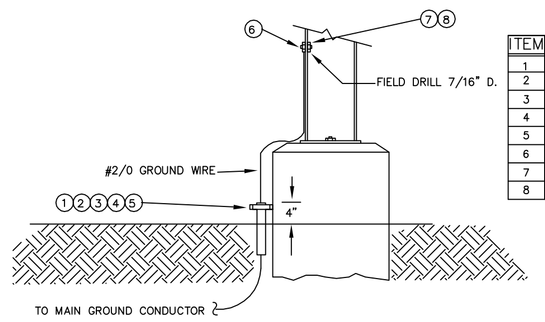

ITEM	DESCRIPTION
1	1/4"-20 CONCRETE ANCHOR
2	1/4" -20 X 3/4" MACHINE BOLT
3	1/4" LOCKWASHER
4	1" CONDUIT CLAMP. ONE HOLE
5	1" PVC CONDUIT. TYPE 40
6	SERVIT CONN. BURNDY #K2C26
7	3/8" -16 NUT, SILICON BRONZE
8	3/8" LOCKWASHER, SILICON BRONZE

F / E-2.5 STEEL COLUMN GROUNDING ASSEMBLY

DETAIL

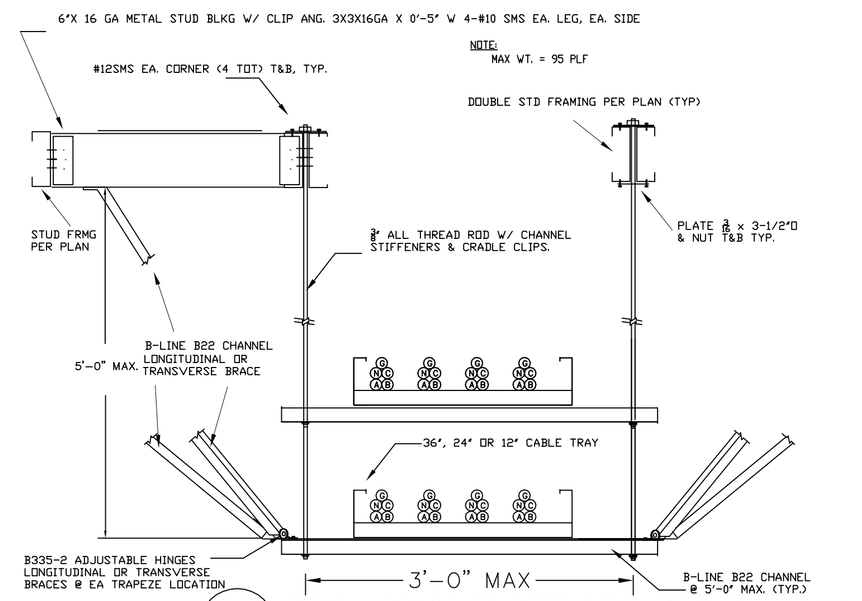

G / E-2.5 TYPICAL BRACE TRAPEZE DETAIL @ CABLE TRAYS

DETAIL

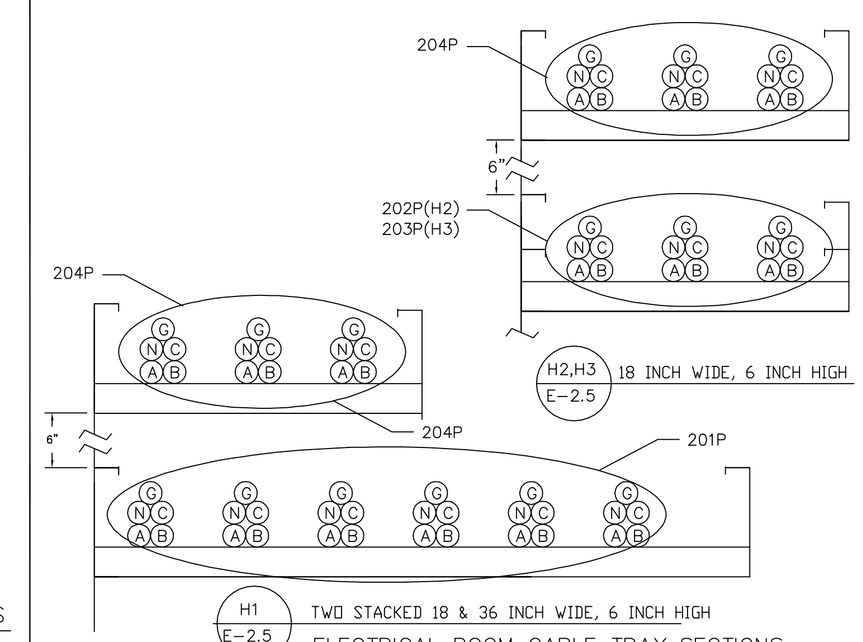

ELECTRICAL ROOM CABLE TRAY SECTIONS

DETAIL

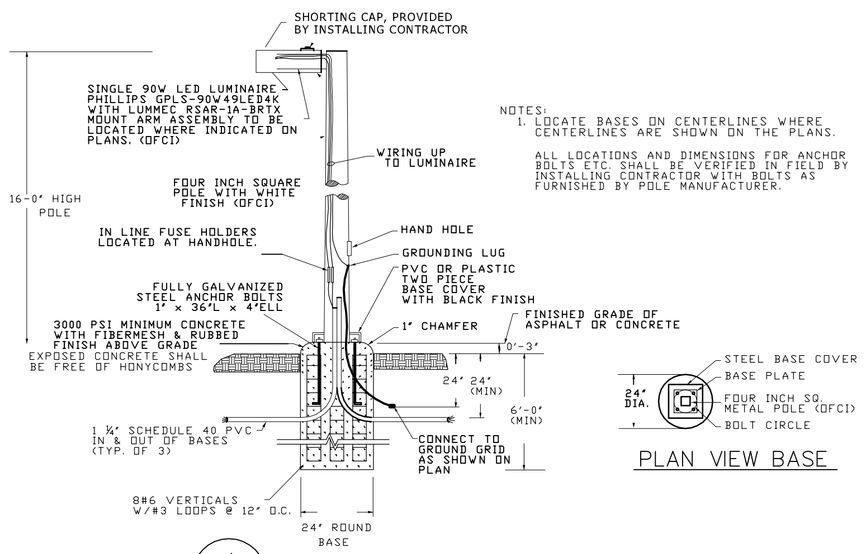

J / E-2.5 POLE MOUNTED LUMINAIRE DETAIL

N T S.

DETAIL

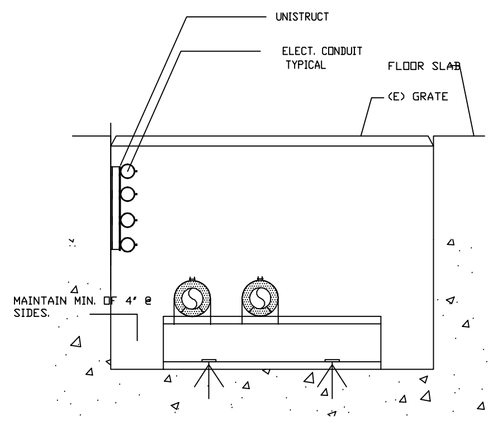

K / E-2.5 CONDUITS IN UTILITY TRENCH

N T S.

DETAIL

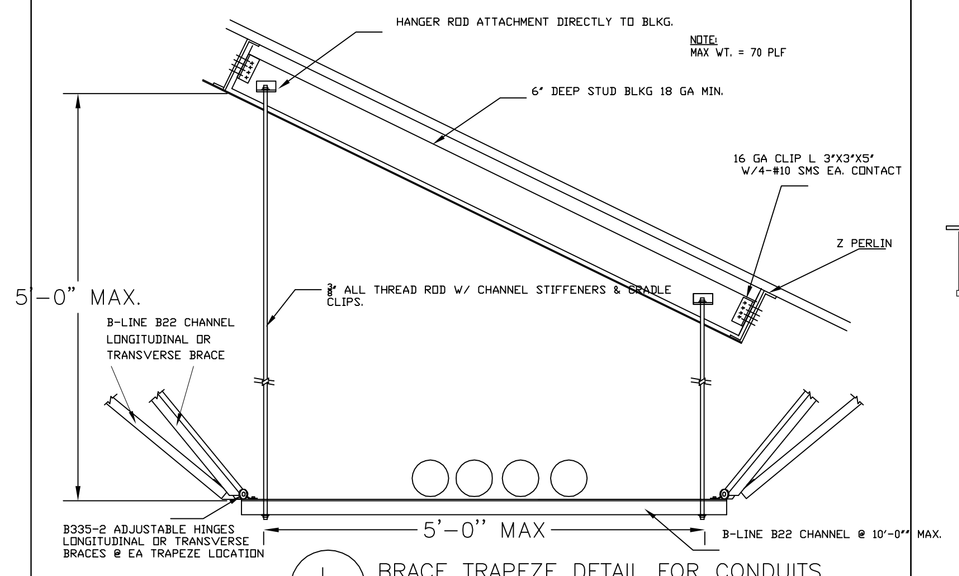

L / E-2.5 BRACE TRAPEZE DETAIL FOR CONDUITS

DETAIL

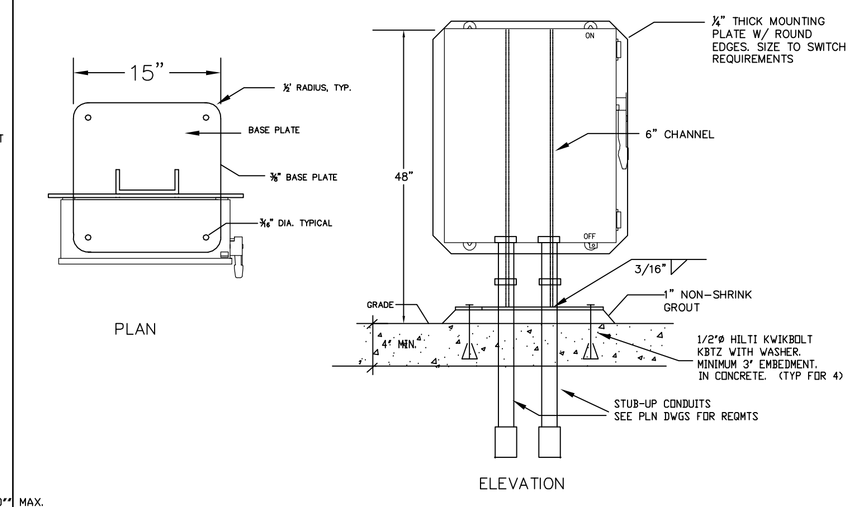

M / E-2.5 DISCONNECT SWITCH MOUNTING STANCHION

N T S.

DETAIL

REGISTERED PROFESSIONAL ENGINEER FREDERICK W. KRUEPKE No. E011140 Exp. 6/30/13 ELECTRICAL STATE OF CALIFORNIA

NO.	DATE	REVISIONS
1	5/10/11	REVISED PER PLAN CHECK COMMENTS
4	6/4/12	ISSUED FOR PLAN CHECK

DE SOLUTIONS
732 Val Sereno Drive
Encinitas, CA 92024
858/832-1242 Fax: 858/756-9891

ENERGY-TECH CONSULTANTS
1166 Oakmont Place
Nipomo, CA 93444
(760) 532-3573

SMUD
SACRAMENTO MUNICIPAL UTILITY DISTRICT

DESIGNED:	FWK
DRAWN:	FWK
APPROVED:	SMUD
DATE:	JAN 06, 2011
SCALE:	AS NOTED

300KW CHP MICROGRID

ELECTRICAL DETAILS SHEET 1

JOB NO.

SHEET NO. E-2.5 OF SHEETS

VOLTS 120/208 | PHASE 3 | WIRE 4

PANEL B | LOCATION ELECT. EQUIP. RM.

MAIN BREAKER/MLO 125A | BUS RATING 125A | MOUNTING: SURFACE

DESCRIPTION	LTS	REC	MIS	VOLT AMPS A	VOLT AMPS B	VOLT AMPS C	BRKR AMP	BRKR P	CIR	CIR	BRKR AMP	BRKR P	VOLT AMPS A	VOLT AMPS B	VOLT AMPS C	LTS	REC	MIS	DESCRIPTION
CHILLER WATER FIP			1	1000			20A	1	1	2	70	3	1000						PANEL "C"
OPERAT. TERMINAL			1		1000		20A	1	3	4				1000					
FIP # 3			1			1000	20A	1	5	6					500				
							20A	1	7	8	20A	1							
OXYGEN PNL			1		50		20A	1	9	10	20A	1							
FIP # 4			1			1000	20A	1	11	12	20A	1							
							20A	1	13	14	20A	1							
							20A	1	15	16	20A	1							
YARD LTG (4)						360	20A	1	17	18	20A	1			700				WEF-1, 1/4HP
SUMP PUMP, 1/2 HP				480			20	2	19	20	20A	1							
208V, 4.6A, 1-PH					480				21	22	20A	1		100					CT-5 LVL CNTRL
									23	24	20A	1			100				CT-6 LVL CNTRL
									25	26									
									27	28									
									29	30									
									31	32									
									33	34									
									35	36									
									37	38									
									39	40									
									41	42									

SUBTOTAL 1480 1530 2360 | 1000 1100 1300

LOAD A 2480 B 2630 C 3660

*LCLx .25 90

TOTAL 2680 2630 3750

PANEL TOTAL 8860 VOLT AMPS = 24.5 AMPS

HIGH LEG - ? 3750 VOLT AMPS = 31.2 AMPS

VOLTS 120/208 | PHASE 3 | WIRE 4

PANEL PANEL H | LOCATION NEAR GSB-2 EQUIPMENT YARD

MAIN BREAKER/MLO 50A | BUS RATING 100A | MOUNTING: SURFACE

DESCRIPTION	LTS	REC	MIS	VOLT AMPS A	VOLT AMPS B	VOLT AMPS C	BRKR AMP	BRKR P	CIR	CIR	BRKR AMP	BRKR P	VOLT AMPS A	VOLT AMPS B	VOLT AMPS C	LTS	REC	MIS	DESCRIPTION
WT-4,SIG.GEN 220P				504			20		1	2	20								
							20		3	4	20								
							20		5	6	20								
							20		7	8	20								
							20		9	10	20								

SUBTOTAL 504 0 0 | 0 0 0

LOAD A 504 B 0 C 0

*LCLx .25 0 0 0

TOTAL 504 0 0

PANEL TOTAL 504 VOLT AMPS = 4.2 AMPS

HIGH LEG - 504 VOLT AMPS = 4.2 AMPS

VOLTS 277/480 | PHASE 3 | WIRE 4

PANEL GSB-3, VFD PANEL | LOCATION CT-5,CT-6 AREA EQUIPMENT YARD

MAIN BREAKER 200A | BUS RATING 400A | MOUNTING: SURFACE

DESCRIPTION	LTS	REC	MIS	VOLT AMPS A	VOLT AMPS B	VOLT AMPS C	BRKR AMP	BRKR P	CIR	CIR	BRKR AMP	BRKR P	VOLT AMPS A	VOLT AMPS B	VOLT AMPS C	LTS	REC	MIS	
VFD CDWP-4A, 25HP				9029			60	3	1	2	15	3	903				1		VFD HXP-2A, 2HP
CIRCUIT 226P					9029				3	4		-		903					CIRCUIT 216P
						9029			5	6		-			903				
VFD CDWP-4B 25HP				9029			60	3	7	8	15	3	903				1		VFD HXP-2B, 2HP
CIRCUIT 227P					9029			-	9	10		=		903					CIRCUIT 217P
						9029		-	11	12		=			903				
VFD AHWP-1A 3HP				1275			15	3	13	14	15	3	558						VFD HWC-1A, 1HP
CIRCUIT 222P					1275			-	15	16		-		558					CIRCUIT 224P
						1275		-	17	18		-			558				
VFD AHWP-1B 3HP				1275			15	3	19	20	15	3	558						VFD HWC-1B, 1HP
CIRCUIT 223P					1275			-	21	22		-		558					CIRCUIT 225P
						1275		-	23	24		-			556				
VFD PCHWP-4A 7.5HP				2921			20	3	25	26									
CIRCUIT 251P					2921			-	27	28									
						2921		-	29	30									
VFD PCHWP-4B 7.5HP				2921			20	3	31	32									
CIRCUIT 252P					2921			-	33	34									
						2921		-	35	36									
									37	38									
									39	40									
									41	42									

SUBTOTAL 26450 26450 26450 | 2922 2922 2922

LOAD A 29372 B 29372 C 29372

*CMLx .25 3672 3672 3672

TOTAL 33044 33044 33044

PANEL TOTAL 99,132 VOLT AMPS = 119.3 AMPS

HIGH LEG - NONE

REGISTERED PROFESSIONAL ENGINEER FREDERICK W. ALCANTE No. E011140 Exp. 6/30/13 ELECTRICAL STATE OF CALIFORNIA

NO.	DATE	REVISIONS
4	6/4/12	ISSUE FOR PLAN CHECK

DE SOLUTIONS
732 Val Sereno Drive
Encinitas, CA 92024
858/832-1242 Fax: 858/756-9891

ENERGY-TECH CONSULTANTS
1166 Oakmont Place
Nipomo, CA 93444
(760) 532-3573

SMUD
SACRAMENTO MUNICIPAL UTILITY DISTRICT

DESIGNED: FWK
DRAWN: FWK
APPROVED: SMUD
DATE: JAN 06, 2011
SCALE: NONE

300KW CHP MICROGRID

ELECTRICAL PANEL SCHEDULES

JOB NO.

SHEET NO. E-2.7 OF SHEETS