Energy Research and Development Division
FINAL PROJECT REPORT

ENABLING RENEWABLE ENERGY, ENERGY STORAGE, DEMAND RESPONSE, AND ENERGY EFFICIENCY WITH A COMMUNITY-BASED MASTER CONTROLLER-OPTIMIZER

Prepared for: California Energy Commission
Prepared by: University of California, San Diego

MARCH 2013
CEC-500-2014-069

Prepared by:

Primary Author:
Byron Washom

University of California, San Diego
9500 Gilman Drive, #0057
La Jolla, CA 92093
Phone: 858-869-5805 | Fax: 858-534-9836
http://www.ucsd.edu
https://rmp.ucsd.edu/strategic-energy/index.html

Agreement Number: PIR-08-043

Prepared for:

California Energy Commission

Consuelo Sichon
Agreement Manager

Fernando Piña
Office Manager
Energy Systems Research Office

Laurie ten Hope
Deputy Director
ENERGY RESEARCH AND DEVELOPMENT DIVISION

Robert P. Oglesby
Executive Director

DISCLAIMER

This report was prepared as the result of work sponsored by the California Energy Commission. It does not necessarily represent the views of the Energy Commission, its employees or the State of California. The Energy Commission, the State of California, its employees, contractors and subcontractors make no warranty, express or implied, and assume no legal liability for the information in this report; nor does any party represent that the uses of this information will not infringe upon privately owned rights. This report has not been approved or disapproved by the California Energy Commission nor has the California Energy Commission passed upon the accuracy or adequacy of the information in this report.

ACKNOWLEDGEMENTS

The University of California, San Diego, thanks its team members for this project:

- California Energy Commission
- Power Analytics (formerly EDSA)
- Viridity Energy, Inc.
- OSIsoft, LLC
- EnerNex
- CleanTECH San Diego
- San Diego State University Research Foundation
- Energy + Environmental Economics
- BioFuels Energy, LLC
- Panasonic Sanyo

The University of California, San Diego, also thanks the California Energy Commission for funding this project.

PREFACE

The California Energy Commission Energy Research and Development Division supports public interest energy research and development that will help improve the quality of life in California by bringing environmentally safe, affordable, and reliable energy services and products to the marketplace.

The Energy Research and Development Division conducts public interest research, development, and demonstration (RD&D) projects to benefit California.

The Energy Research and Development Division strives to conduct the most promising public interest energy research by partnering with RD&D entities, including individuals, businesses, utilities, and public or private research institutions.

Energy Research and Development Division funding efforts are focused on the following RD&D program areas:

- Buildings End-Use Energy Efficiency
- Energy Innovations Small Grants
- Energy-Related Environmental Research
- Energy Technology Systems Integration
- Environmentally Preferred Advanced Generation
- Industrial/Agricultural/Water End-Use Energy Efficiency
- Renewable Energy Technologies
- Transportation

Enabling Renewable Energy, Energy Storage, Demand Response, and Energy Efficiency With a Community-Based Master Controller-Optimizer is the final report for Grant Number PIR-08-043 conducted by the University of California, San Diego. The information from this project contributes to Energy Research and Development Division's Energy Technology Systems Integration program area.

For more information about the Energy Research and Development Division, please visit the Energy Commission's website at www.energy.ca.gov/research/ or contact the Energy Commission at 916-327-1551.

ABSTRACT

The University of California, San Diego, (UCSD) has a 42-megawatt (MW) microgrid managed by a master controller and optimization system funded by the California Energy Commission. This project developed a master controller and optimizer that determines which energy resource(s) to employ, and when, to ensure optimal performance, system efficiency, and overall reliability for the campus facilities. The controller then manages the energy resources and loads. This master controller can help multiple customers and renewable energy generators reduce their electricity costs and carbon impact and extract additional economic value by participating in the electricity markets.

Power Analytics modified its Paladin™ software application to analyze the distribution power system and identify any power system problems with the optimized schedules produced by Viridity's VPower™ software. The two applications were configured to iterate until an optimized solution was found. UCSD and EnerNex determined the applicable standards and regulations to ensure that all the energy resources and loads properly operate with the controller. UCSD and EnerNex developed a field testing methodology and helped integrate the master controller. OSIsoft, LLC managed all the real-time data and events through their PI™ system.

California ratepayers who can benefit from the results of this project consist of military bases, large commercial and industrial customers, small communities, and other university campuses. The major benefits that have been realized through demonstrating a microgrid master controller are improved operational efficiency, flexibility, and monitoring capability; reduced operating costs; reduced greenhouse-gas production; enhanced system reliability; and the advancement of smart grid and renewable energy technologies through lab-to-market commercialization. When coupled with an aggressive energy efficiency program, UCSD reduced its direct access electricity imports by 13.6 percent the past four years. In total, UCSD's microgrid with 92 percent self-generation on an annual basis saves about $850,000 per month.

Keywords: Microgrid, distributed energy resources, demand response, renewable energy, renewable integration, controller-optimizer, Paladin, VPower, UCSD, microgrid controller, big data

Please use the following citation for this report:

Washom, Byron, Kevin Meagher, Kay Stefferud. University of California, San Diego. 2013. *Enabling Renewable Energy, Energy Storage, Demand Response, and Energy Efficiency With a Community-Based Master Controller-Optimizer***.** California Energy Commission. Publication Number: CEC-500-2014-069.

TABLE OF CONTENTS

Acknowledgements i

PREFACE ii

ABSTRACT iii

TABLE OF CONTENTS iv

LIST OF FIGURES vi

LIST OF TABLES vi

EXECUTIVE SUMMARY 1

Introduction 1

Project Purpose 1

Project Results 1

Project Benefits 3

CHAPTER 1: Introduction 5

1.1 Goals and Objectives 5

1.2 Overview of the University of California, San Diego Microgrid 5

CHAPTER 2: Smart Grid Master Controller, Optimizer, and Scheduler 8

2.1 Master Controller from Power Analytics 8

2.2 Optimizer from Viridity 10

CHAPTER 3: Interoperability 13

3.1 Requirements Analysis of the Overall System 13

3.2 Interoperability Requirements 14

3.3 Information and Transaction Model Framework 15

3.4 Information and Transaction Models 15

3.5 Field Testing and Acceptance Methodology 15

3.6 Market-Significant Smart Appliance Recommendations 15

3.7 Concept Validation and Preliminary Decisions 15

3.8 Fuel Cell Integration into Master Controller-Optimizer 16

3.9 Prepare a Production Readiness Plan 17

CHAPTER 4: Data Acquisition, Analysis, and Visualization **18**

CHAPTER 5 Demand Response **22**

CHAPTER 6: Market Connectedness **24**

6.1 Opportunities for Community Representative Input on Technical, Economic, and Environmental Barriers to Implementation 25

6.2 Project Briefing and Proposed Input Schedule 25

6.3 Interim Project Report Review and Proposed Revisions 26

6.4 Regional RESCO Community Financing 26

6.5 Barriers and Risks Impeding Financing and Development 27

6.5.1 Systems-Related Barriers and Risks 27

6.5.2 Project-Related Barriers and Risks 28

6.6 Smart Grid Barriers 29

6.6.1 Technology Requirements, Infrastructure, and Interoperability 29

6.6.2 Appropriate Regulatory Structures 30

6.6.3 Cost-Effectiveness Criteria and Valuation Methods 30

6.6.4 Incompatible Market and Pricing Structures 30

6.6.5 Cybersecurity Risks 31

6.6.6 Customer Acceptance and Engagement 31

6.6.7 Third-Party Participation 31

6.7 Barriers to Sustainable Energy Planning 32

6.8 Community Planning for Integrated Energy Solutions 33

6.9 Defining Sustainable Urban Energy Planning 33

6.10 Chula Vista Sustainable Energy Planning 36

6.10.1 Tools and Methods 39

6.10.2 Systemic Assessment of Costs and Benefits 40

6.10.3 Alternative Planning Scenarios 42

6.10.4 Performance Measures, Metrics and Model Site Design Standards 43

APPENDIX A: Functional Specification For the Integration of VPower™ to Power Analytics' Products **A-1**

APPENDIX B: EnerNex Final Project Report..... B-1

LIST OF FIGURES

Figure 1: One-Line Diagram of UCSD Microgrid 6
Figure 2: Microgrid Architecture 8
Figure 3: Power Analytics Microgrid Controller Dashboard 9
Figure 4: Detailed Interfaces and Components of the UCSD Microgrid..... 10
Figure 5: High-level components of the UCSD Microgrid System Design..... 13
Figure 6: UCSD's Directed Biogas Fuel Cell, 2.8 Megawatt Baseload 17
Figure 7: The Data Acquisition, Cleansing, Mining, Analysis, and Visualization Topography... 18
Figure 8: Gas Turbine Performance Profile 19
Figure 9: Fuel Cell Performance Profile 19
Figure 10: Solar Plants Performance Profile 20
Figure 11: Weekly pattern of large campus buildings 20
Figure 12: Imports as a SDG&E Direct Access Customer 21
Figure 13: UCSD Demand Response for August 23-25, 2010 22
Figure 14: UCSD Demand Response on August 15, 2012 23

LIST OF TABLES

Table 1: Final Report Highlights Interface Standards..... 14
Table 2: Model Validation Results Table Format 16
Table 3: San Diego Regional Private Sector Partners with UCSD's Microgrid 27

EXECUTIVE SUMMARY

Introduction

The University of California, San Diego (UCSD) has a 42-megawatt (MW) microgrid managed by a master controller and optimization system funded by the California Energy Commission under Grant Number PIR-08-043 from the Renewable Energy Secure Community (RESCO) solicitation. This initial grant to UCSD became the wellspring of innovations and deployments of distributed energy resources since 2009 that became integrated with the legacy infrastructure on the microgrid. This final report describes the master controller and optimization system that was funded under this grant and briefly details the controlled assets.

Project Purpose

The research team sought to develop a fully integrated master controller and optimizer that would provide intelligence-driven solutions that enable multiple and individual customers and renewable energy (RE) generators not only to reduce their electricity costs and carbon impact through increased awareness and better efficiency, but also to extract additional economic value by direct participation in the electricity markets. The master controller should also be "future-proof" - flexible and adaptable to easily incorporate additional resources and loads to the microgrid.

Project Results

The project developed and implemented a replicable demonstration of a semiautonomous microgrid master controller for real-time optimization and management of a community-scale smart grid infrastructure. Specifically, Power Analytics modified its Paladin™ software application designed to analyze the distribution power systems and identify any power system problems with the optimized schedules produced by Viridity's VPower™ software. Paladin produced a detailed model of distribution equipment including feeders, switches, transformers, and breakers that do not appear in the VPower model for distributed energy resource. The XML-based interfaces for data exchange between VPower and Paladin were configured for resource actual values, resource initial conditions, resource forecast values, scheduled values by resource, power flow constraints, and dashboard data summary. Viridity developed an integration/development system, and Paladin supported and tested the interface development. The two applications were configured to iterate until an optimized solution was found that did not result in power system violations, or until a maximum number of iterations had occurred.

VPower was installed on servers at the UCSD campus and integrated with the master controller supporting data exchange with Power Analytics' Paladin and OSIsoft's PI™ systems, which provided access to campus real-time and historical cost, load, and resource data. An enhanced version of VPower observed and tested the business models, rates, and incentives developed as part of the various study strategies proposed.

UCSD and EnerNex identified the applicable standards and regulations for integrating the energy resources and loads into the master controller, developed a field testing and acceptance methodology, and prepared the Production Readiness Plan (Appendix B).

OSIsoft, LLC provided UCSD a state-of-the-art corporate solution in enterprise management of real-time data and events through their PI system. The PI system collects roughly 85,000 data streams per second from the demand, storage, and supply sources within the microgrid.

UCSD participated in a special San Diego Gas & Electric (SDG&E) demand response (DR) tariff in 2012 and conservatively bid 5 megawatt-hour (MW-h) per hour on each day ahead since SDG&E would pay only for levels less than 150 percent of bid. The DR tariff was $500 per megawatt-hour incentive for the each of the four-hour periods. On August 12, 2012, UCSD provided an average of 7.1 MW-h per hour and earned $14,557. On September 9, 2012, UCSD provided an average of 9.1 MW-h per hour and earned $15,269. On October 12, 2012, UCSD provided an average of 8.7 MW-h per hour and earned $12,643. UCSD is the single largest demand response participant in the SDG&E service territory.

CleanTECH San Diego provided market connectivity between the research at UCSD and the surrounding community beneficiaries. Target beneficiaries included both stakeholders in the San Diego region and more broadly throughout California. CleanTECH San Diego's objectives were to create a network of stakeholders initially throughout the San Diego region to serve as the market link; organize and coordinate appropriate content from partners such as Latham & Watkins and others; and hold at least one conference and one briefing to begin the process of transferring learning and receiving feedback.

CleanTECH San Diego accomplished its objectives through activities in its Sustainable Communities Program and the Clean Renewable Energy Bonds Coalition activities. The "Greening San Diego" program is a strategic partnership led by CleanTECH San Diego and local municipalities that is designed to accelerate the adoption of sustainability solutions. The City of Santee and City of Lemon Grove were selected to serve as CleanTech San Diego's pilot partners in launching the Greening San Diego Program, based on a number of factors, including size of municipality, location, and makeup of residents, and so forth. CleanTECH San Diego identified and is facilitating best practice sharing among the municipalities in the region.

CleanTech San Diego convened a series of meetings and briefings with the target group of stakeholders during the grant performance period. Several meetings were held to outline best practices occurring on campus and in other venues for the benefit of community stakeholders, including municipal agencies. Service providers, including legal, financial, and engineering agencies, were also on hand and made several presentations regarding various matters of interest. CleanTech San Diego hosted representatives from the National Institute of Standards & Technology, the National Renewable Energy Lab, and the Feed-In Tariff Coalition. Meeting content ranged from information on feed-in tariffs, Clean Renewable Energy Bonds financial models, and actual progress reports on project implementation of both solar systems and streetlights.

More progress was made than was anticipated primarily due to the opportunities presented with the CREBs Coalition win. During the period of September 1, 2010-December 31, 2010, CleanTech San Diego organized, hosted, or sponsored over seven meetings, luncheons, or

events. CleanTech San Diego is actively working with municipalities in Orange County as we transfer our program structure and lessons learned.

UCSD's accomplishments in RESCO Community Financing included co-leading regional Clean Renewable Energy Bonds applications that netted $154 million and 25 MW of photovoltaics for the San Diego region, and site-hosting the International Microgrid Symposium in September 2009, Communities for Advanced Distributed Energy Resources meeting in April 2010, the United States Department of Energy's (DOE's) 1st Annual Microgrid Workshop August 2011, DOE/California Public Utilities Commission (CPUC) Photovoltaic Integration and Solar Forecasting Workshop in March 2011, and Society of American Military Engineers in November 2012. UCSD also organized microgrid tours for DistribuTECH, Power Engineering Society, Institute of Electrical and Electronics Engineers, Montreux Energy, and Solar Energy Power.

UCSD, CleanTECH San Diego, and San Diego State University Research Foundation provided a project narrative outlining potential barriers for consideration by community representatives invited to participate in the Community Advisory Committee. The briefing oriented committee members to the collateral project and focused their attention on the barriers that may limit the transferability of the technology applications within a community energy system context. Specifically, the foundation examined barriers and risks impeding financing and development, including systems and project-related barriers; smart grid barriers; technology requirements, infrastructure, and interoperability; appropriate regulatory structures; cost-effectiveness criteria and valuation methods; incompatible market and pricing structures; cybersecurity risks; customer acceptance and engagements; third-party participation; barriers to sustainable energy planning; community planning for integrated energy solutions; and defining sustainable urban energy planning. The project participated with the City of Chula Vista Sustainable Energy Planning in the areas of tools and methods; systemic assessment of costs and benefits; alternative planning scenarios; and performance measures, metrics, and model site design standards.

Project Benefits

California ratepayers who can benefit from the results of this project consist of military bases, large commercial and industrial customers, small communities, and other university campuses. The major benefits that have been realized through demonstrating a microgrid master controller are improved operational efficiency, flexibility, and monitoring capability; reduced operating costs; reduced greenhouse-gas production; enhanced system reliability; and the advancement of smart grid and renewable energy technologies through lab-to-market commercialization. When coupled with an aggressive energy efficiency program, UCSD reduced its direct access kilowatt-hour (kWh) imports by 13.6 percent the past four years despite a $200 million per year capital expansion over five years; however, its total SDG&E bill went up 23.2 percent during that same period. In total, UCSD's microgrid with 9 percent self-generation on an annual basis saves about $850,000/month compared to the alternative of 100 percent imports as a direct access customer.

CHAPTER 1: Introduction

1.1 Goals and Objectives

This project developed a fully integrated master controller and optimizer that would provide intelligence-driven solutions that enable multiple and individual customers and renewable energy (RE) generators to reduce their electricity costs and carbon impact through increased awareness and better efficiency. This device would also extract additional economic value by direct participation in the electricity markets. This allowed the system to independently determine which sources of power to employ, and when, to ensure optimal performance, energy efficiency, and overall reliability for the facility. In such a scenario, a smart grid's directives can be singular in nature or a combination of prioritized directives, such as achieving multiple objectives (e.g., reliability, minimized environmental impact, optimum utilization of indigenous RE resources, and optimized economics for a microgrid). The master controller should also be "future-proof" - flexible and adaptable to easily incorporate additional resources and loads to the microgrid. To achieve this highly advanced level of reasoning, intelligence must be encoded in the system in all stages through the power system's life cycle.

This project developed and implemented a replicable demonstration of a semi-autonomous microgrid master controller for real-time optimization and management of community-scale smart grid infrastructure. This was accomplished through coupling the master controller's real-time power analytics capabilities with the optimization and scheduling software that leveraged the University of California, San Diego's (UCSD's) Advanced Metering Infrastructure (AMI), communications network, installed RE generation, and thermal and electricity energy storage assets. The output of this effort laid the critical foundation necessary for a commercialized master controller, optimizer/scheduler, and AMI product developed specifically for community–based, smart grid planning.

1.2 Overview of the University of California, San Diego Microgrid

UCSD has a 42-megawatt (MW) microgrid managed by a master controller and optimization system funded by the California Energy Commission (Energy Commission) under grant number PIR-08-043 from the Renewable Energy Secure Community (RESCO) solicitation. This initial grant to UCSD became the wellspring of innovations and deployments of distributed energy resources (DERs) since 2009 that became integrated with the legacy infrastructure on the microgrid. This final report describes the master controller and optimization system that was funded under this grant and a brief description of the controlled assets; thus, it greatly understates the cumulative impact to UCSD's microgrid. It is difficult to separate out the contributions and leveraging that the RESCO grant provided, and that is why we often state, "The DNA from the Energy Commission's RESCO grant is spread throughout the campus microgrid."

UCSD owns and maintains a 69-kilovolt (kV) substation, 96 12 kV underground feeder circuits, and four 12kV distribution substations throughout the 1,200-acre campus. Figure 1 shows the electrical one-line diagram of the UCSD microgrid.

Figure 1: One-Line Diagram of UCSD Microgrid

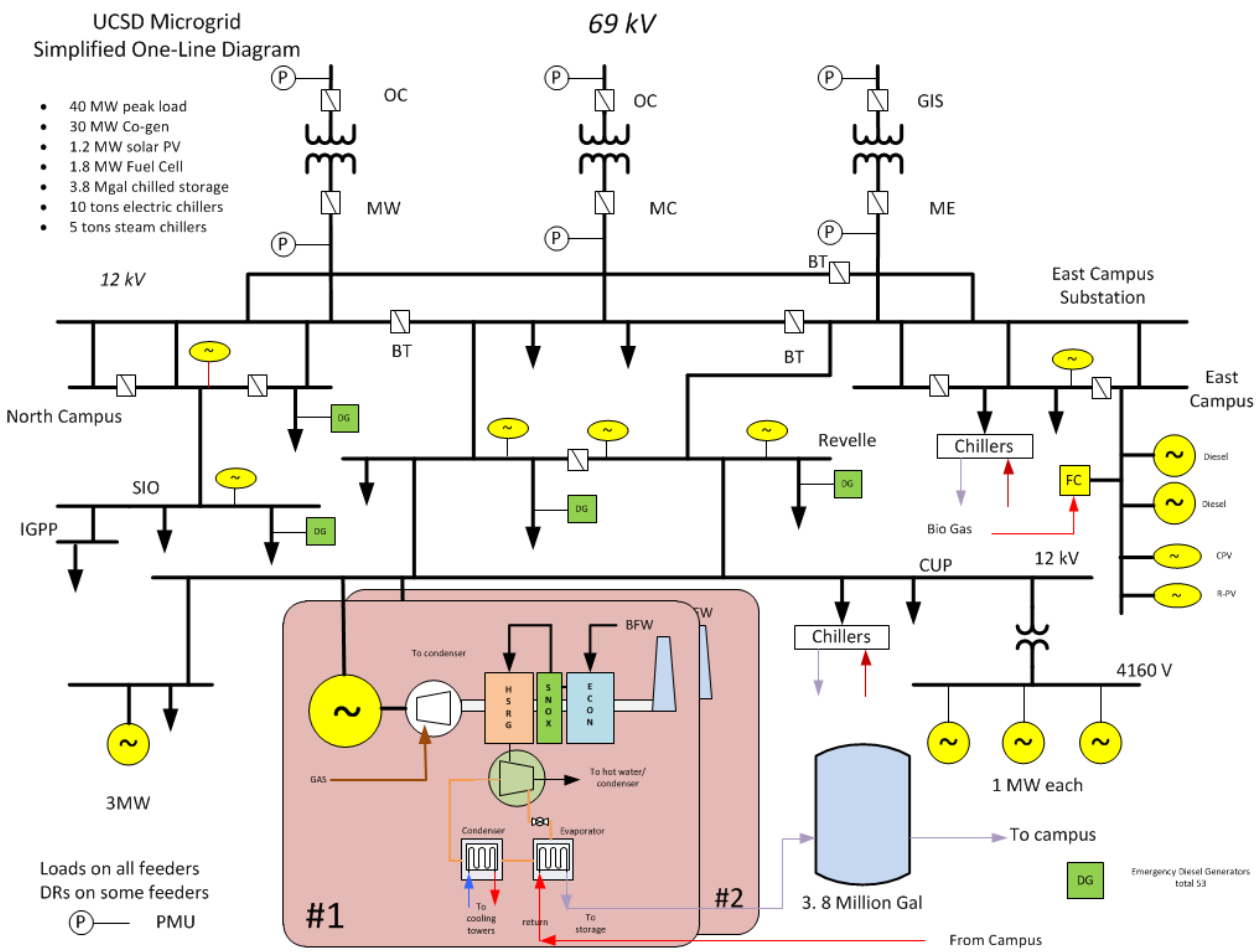

The microgrid self-generates 92 percent of its annual electricity load and 95 percent of its heating and cooling load. The microgrid controller seamlessly operates the following distributed assets obtained through other funding sources:

- A pioneering 2.8 MW molten carbonate fuel cell utilizing directed biogas from the Point Loma wastewater treatment plant
- 1.5 MW of rooftop photovoltaics (PV) throughout campus
- 5.5 kW and 22 kW Concentrating Photovoltaic (CPV) systems from Soitec/Concentrix (Figure 2)
- 30 kilowatt (kW)/30 kilowatt-hour (kWh) PV-integrated storage system (Figures 3 & 4)
- United States Environmental Protection Agency (EPA) Star Award-winning 27 MW Combined Cooling, Heat, and Power (CCHP) Plant
- Four million-gallon thermal storage system

UCSD saves more than $850,000 per month from its microgrid when compared to the alternative of being a direct access customer importing electricity from the grid. This savings is especially significant considering that the campus experienced an average of $200 million/year

capital building expansion program over the last five years that has created a significant growth in energy. This energy growth has been offset by an extensive $22 million/year energy efficiency program on the legacy 12 million square feet of occupiable building space. Consequently, UCSD has reduced its direct access kWh imports by 13.6 percent the past four years despite a during this $200 million/yr capital expansion over five years; however, its total SDG&E bill went up 23.2 percent during that same period.

The UCSD microgrid in 2012 was estimated to generate 266 g of Carbon Dioxide ($C0_2$)/kWh, or 29 percent lower than the California marginal generation mix, due to the commissioning of the 2.8 MW baseload, directed biogas fuel cell on campus.

Major Awards and Recognitions include the EPA Energy Star Award for achieving 66 percent efficiency for combined cooling, heating and natural gas power plant, 2010; 1st Annual Climate Leadership Award for Institutional Excellence from the American College & University Presidents' Climate Commitment Group, 2009; Gold STARS Rating from AASHE and being the first California university and 10th in the nation to receive it, 2011; the SDG&E Energy Grand Champion Award in 2013, and the State Leadership In Clean Energy (SLICE) from Clean Energy States Alliance awarded in 2012 to the Energy Commission for the RESCO funding. The latter's award citation read, *"This program [UCSD Microgrid] is a solid example of what could and should be done at a public university around RD&D and implementation of renewable energy technology; it demonstrates how renewable energy technologies can be used and provides valuable insights on how to advance the concept. We need advanced thinking and leadership like this to advance new technologies and gain valuable experience and learning."*

The UCSD microgrid received a significant amount of notoriety in 2009-2012 including being the site host for the International Microgrid Symposium (2009), DOE Microgrid Planning Workshop (2011), the DOE/CPUC Forum on High Solar Penetration (2011, 2013). Both the Rocky Mountain Institute (RMI) http://www.youtube.com/watch?v=TEx4gm3523I and the Energy Commission /US Navy (http://www.youtube.com/watch?v=8XksxOZSJOU) have posted short videos touting the UCSD microgrid as "best in class."

CHAPTER 2:
Smart Grid Master Controller, Optimizer, and Scheduler

Figure 2 shows the general microgrid architecture between the infrastructure, communications Local Area Network (LAN), and the various interface servers to support its operations.

Figure 2: Microgrid Architecture

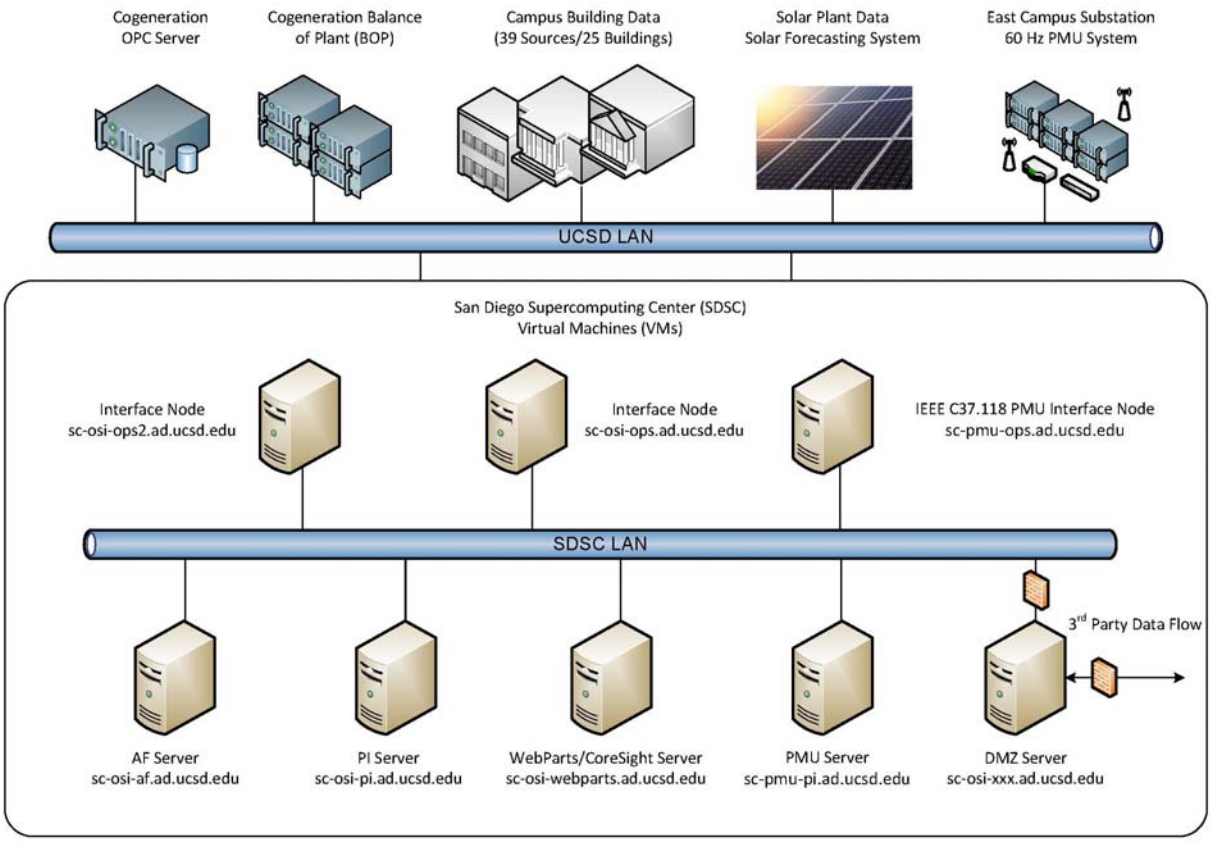

2.1 Master Controller from Power Analytics

Paladin® from Power Analytics is an application designed to analyze distribution power systems. Paladin is used to identify any power system problems with the optimized schedules produced by VPower. The electrical resources modeled in VPower were also modeled directly in Paladin. Additionally, Paladin includes a detailed model of equipment including feeders, switches, transformers, breakers, etc. that do not appear in the VPower model. Figure 3 shows a screenshot of the microgrid controller dashboard designed by Power Analytics.

Figure 3: Power Analytics Microgrid Controller Dashboard

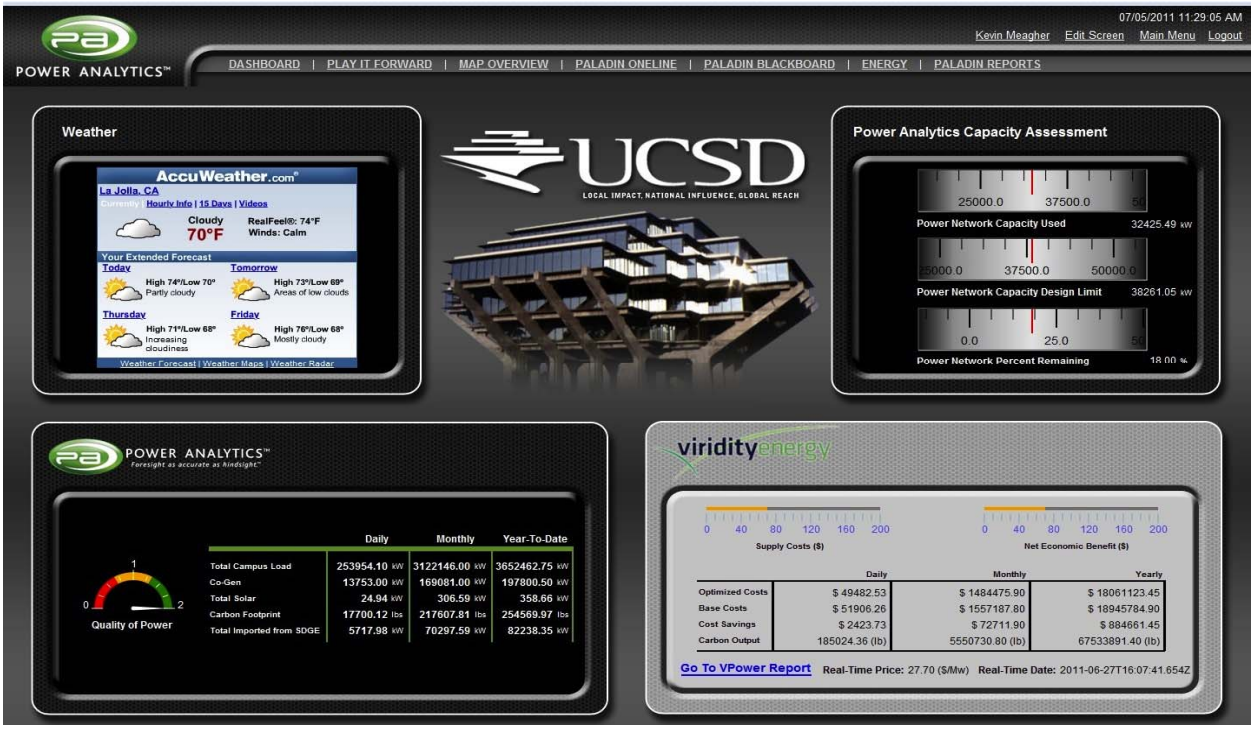

XML-based interfaces for data exchange between VPower and Paladin were configured for the following categories of data: Resource Actual Values, Resource Initial Conditions, Resource Forecast Values, Scheduled Values by Resource, Power Flow Constraints, and Dashboard data summary. During the exchange of messages via the interface, VPower does a translation from its own resource names to the names that are used within Paladin. Figure 4 provides a more detailed portrayal of the microgrid's components and the interfaces with the master controller, optimizer, and scheduler – referenced in this report as the "microgrid controller."

Viridity developed an integration/development system and Paladin supported and tested the interface development. The two applications are configured to iterate until an optimized solution is found which does not result in power system violations, or until a maximum number of iterations has occurred.

The VPower software solution installed at UCSD includes two servers. One is a Linux-based server that serves up the User Interface, VPower Core, and the Enterprise Service Bus (ESB) and hosts the database software. The other is a Windows server and hosts our VPower Optimizer application. In addition to the VPower modules and components, the installation process required installing and configuring pre-requisite supporting software including AIMMS, Java JDK, Apache Tomcat, Apache Active MQ, Filezilla Server, and Postgres/SQL database.

Figure 4: Detailed Interfaces and Components of the UCSD Microgrid

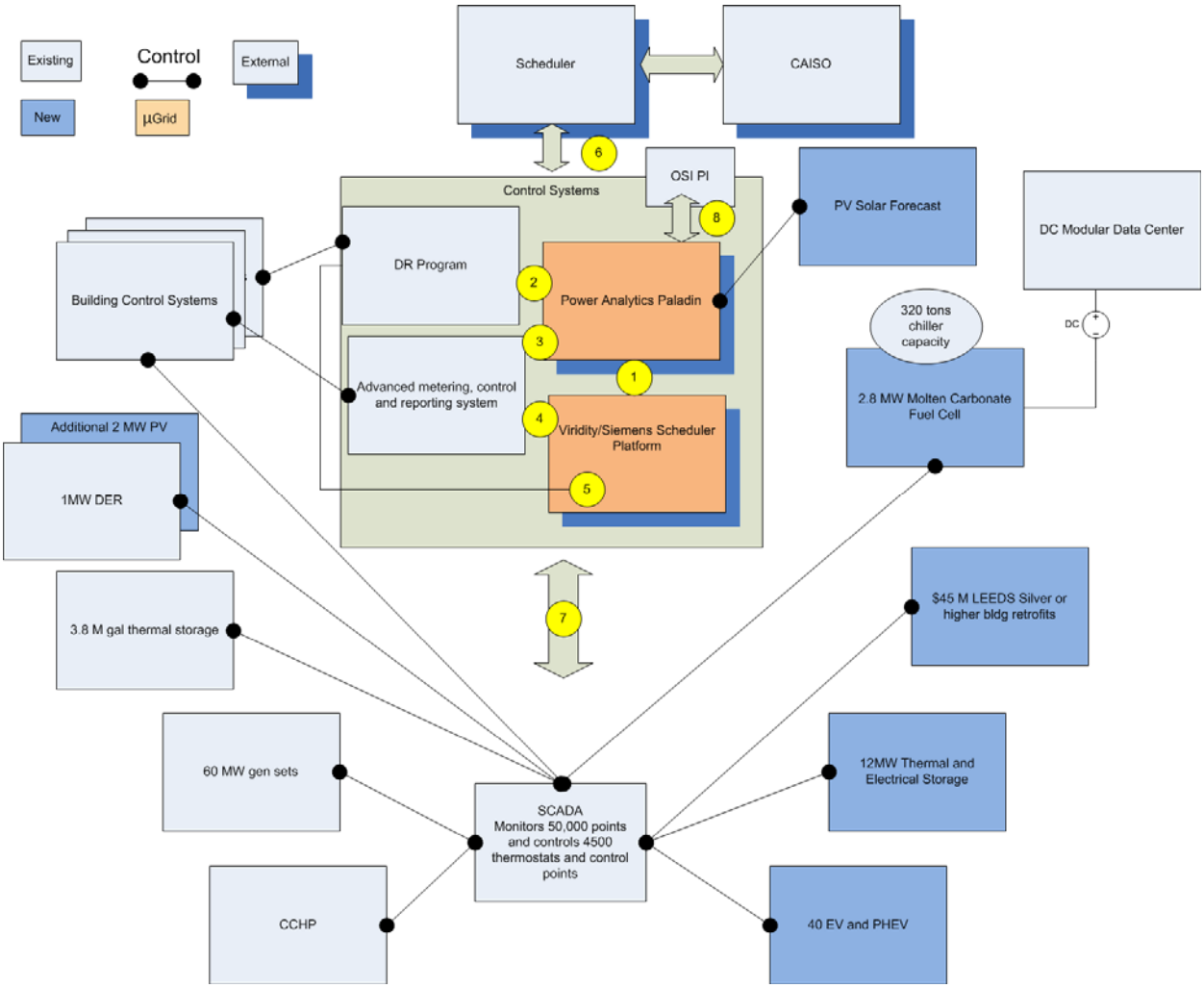

2.2 Optimizer from Viridity

Viridity's VPower platform is proprietary software developed to manage and optimally schedule demand-side resources and bidding strategies using numerous economic and operational inputs. VPower was installed on servers at the UCSD campus and integrated with the master controller supporting data exchange with Power Analytics' Paladin™ and OSIsoft's PI™, which provides access to campus real-time and historical cost, load, and resource data. VPower optimizes and implements dispatch strategies on campus. The second objective was to enhance the model and master controller at UCSD using Viridity's VPower software to manage DER participation in optimized dispatch schedules that will meet campus energy demands, lower costs, and take advantage of market programs for revenues. The aim was to use an

enhanced version of VPower to observe and test the business models, rates, and incentives developed as part of the various study strategies proposed.[1]

Viridity accomplished their goals and objectives by completing the Development of Power Analytics/Viridity Interface (See APPENDIX A: Functional Specification For the Integration of VPower™ to Power Analytics' Products); completing integration testing of the Power Analytics/Viridity Interface; identifying, designing, and developing additional resources algorithms; collecting information for Energy Resources from UCSD; and finalizing the modeling of the Energy Resources within VPower.

Simulation and real-time models were developed so that optimized dispatch schedules can be created using simulated inputs as well as real-time data. External inputs, such as real-time weather, day-ahead, and real-time market prices and real-time data feeds from campus DERs are included in the optimization. Real-time data feeds coupled with the master controller's ability to re-optimize based on changing conditions could allow rapid responses to pricing and dispatch signals to support intra-day, price-sensitive scheduling in market programs.

The original approach was to use the capabilities of VPower to create optimized campus resource dispatch schedules using varying constraints to observe the flexibility of using campus DER to meet campus energy requirements. As a first step, the campus resources, requirements, and constraints needed to be identified and understood. Meetings with campus staff and campus historical data were the primary sources of information. The first goal was to build a model and create dispatch schedules that could be validated using campus historical data from multiple sources.

In parallel, an interface with the master controller was developed to provide a link to import real-time and historical data directly into the VPower model. This interface supported the bidirectional exchange of information regarding the status of resources, the proposed optimized scheduling of resources, and the response from power system analyses by Paladin.

Software enhancements were made as new resource types and behaviors were discovered. To support rapid enhancements, a UCSD-specific branch of VPower code was created to meet the project schedule. Later in the project, as the VPower core product functionality included many of those same enhancements features developed for the UCSD branch, the UCSD model was imported into the latest version of VPower for the results.

Leveraging work from this grant, the campus model in VPower included a simple generation, storage, and load model. To more comprehensively model demand response and load flexibility, thermal resources (steam generators, stratified cold-water storage, or hot and chilled water requirements) were added to the model. The large storage tank, the interruptible load (Johnson Control Comfort Index), and the hot water temperature reduction strategy meant that

---

1 Ibid 73, http://calsolarresearch.ca.gov/component/option,com_sobipro/Itemid,0/pid,54/sid,73/

VPower could manage multiple MWs of load associated with heating and cooling the campus facilities and those MWs could be shifted to the hours where the energy was least expensive.

As the project team evaluated alternative testing strategies to achieve the objectives, it was clear that several VPower software enhancements were required. VPower was designed to support near-term and real-time operations focusing on economic optimization of distributed energy resources. The capability to perform studies with large amounts of varying inputs and to graph results in alternative scenarios was limited. Ultimately, this evaluation drove the team to two important conclusions that informed the testing effort. First, the cost-benefit analysis tool would be leveraged to perform the bulk of analysis until the relevant capabilities were available in VPower. Second, VPower development priorities were established to produce the needed system enhancements.

In another example of how the RESCO grant contributed to significant enhancements is evident when Viridity won a California Solar Initiative (CSI) Research, Development, Demonstration, and Deployment Program Grant for *Integration of high penetration renewables using distributed energy resources, A case study based on the University of California, San Diego*.[2] Viridity's subcontractor E3 developed the UCSD Campus Dispatch and Energy Costing Tool to quantify the net benefits of each strategy. The UCSD Campus Dispatch and Energy Costing Tool was developed in Analytica focusing on economic calculations. E3 expanded the model to perform hourly dispatch optimization to facilitate scenario analysis over hourly, monthly, and annual time scales. The model incorporates the physical relationships of the Central Utility Plant (CUP) resources including the thermal and electrical relationships among CUP systems. The UCSD Campus Dispatch and Energy Costing Tool determines the minimum cost to UCSD by dispatching resources so that the electrical and thermal needs are met and physical constraints such as capacity and minimum run times are satisfied. In a parallel effort, the cost-benefit analysis tool used in the baseline analysis was enhanced to help support testing scenarios. The mitigation strategy developed to meet project objectives within the time remaining was to further enhance the optimization capability of the cost-benefit analysis tool and focus on using it to evaluate the study strategies.

---

2 Ibid, 7.

CHAPTER 3: Interoperability

UCSD and EnerNex performed a requirements analysis, mapped the interoperability requirements, adopted a transaction model framework, mapped the information and transaction models, developed a field testing and acceptance methodology, recommended smart appliances, validated concepts and preliminary decisions, helped integrate the master controller, and prepared the Production Readiness Plan. Figure 5 shows the high-level components of UCSD's microgrid system. EnerNex provided a subcontractor report entitled, "*Enabling Renewable Energy, Energy Storage, Demand Response, and Energy Efficiency with a Community Based Master Controller-Optimizer Final Report*" dated December 2011 (see APPENDIX B:
EnerNex Final Project Report). The EnerNex report provides the technical details of the work that summarizes below, and all section references below relate to the sections in the EnerNex report.

Figure 5: High-level components of the UCSD Microgrid System Design.

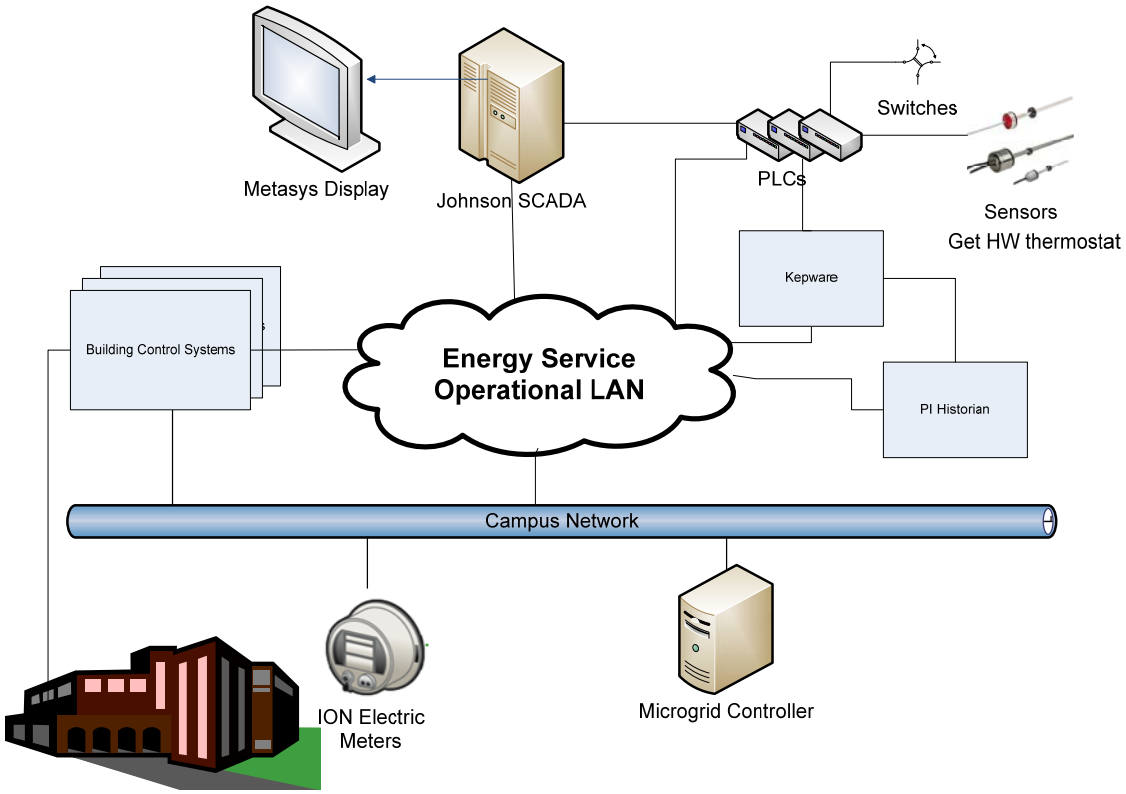

3.1 Requirements Analysis of the Overall System

The Requirements Analysis provided UCSD, Power Analytics, and Viridity with emerging and existing protocol standards and requirements to have the widest possible interoperability with

two-way communication smart end-use devices. Table 1 shows the interface standards used in this project. EnerNex performed the following activities:

- Identified the system actors among which information is exchanged. See Appendix B, Section 2.1.3 for results.
- Identified key points of interoperability from the information exchange paths. See Appendix B, Section 2.1.4 for results.
- Identified functional and non-functional requirements, including security and reliability for interfaces. See Appendix B, Section 2.1.5 for results.
- Adhered to the IntelliGrid methodology as published in the International Electrotechnical Commission's (IEC's) Publicly Available Specification IEC 62559 "IntelliGrid Methodology for Developing Requirements for Energy Systems." See Appendix B, Section 2.3.2 for a description of IntelliGrid methodology for this project.

Table 1: Final Report Highlights Interface Standards

System/Device	Standard	Status
Plug-in Electric Vehicles	SAE J1772	Adopted
	SAE J2836/1	Adopted
	SAE J2846/1	Adopted
Meters	ANSI C12.19, IEC 61850-7-420	Adopted
RTUs	IEEE 1815-DNP 3.0,	Pending
	IEC 61850-7-420, IEC 61850-90-7	Adopted
Field Devices	IEC 61850	Adopted
Electric Storage Interconnection Guidelines	IEEE 1547.4, 1547.7, 1547.8	Under Development
PV Controllers	IEEE 1547-8	Under Development
IETF	Smart Grid Informational IETF RFCs	Adopted
Common Information Model for Distribution Grid Management	IEC 61968 CIM, IEC 61850-7-420, MultiSpeak V4	Adopted
Common Price Communication Model	Oasis EMIX, ZigBee Smart Energy Profile 2.0, NAESB Requirements	Pending
Common Scheduling Mechanism	OASIS-WS	Pending
Standard DR and DER Signals	NAESB WEQ015, OASIS EMIX, OpenADR, Open AMI-ENT, ZigBee SEP 2.0	Under Development
Standard Energy Usage Information	NAESB Energy Usage Information, OpenADE, ZigBee SEP 2.0, IEC 61968-9, ASHRAE SPC 201p	Under Development
Building Automation	ASHRAE BACNET, SPC201p	Pending, Under Development

3.2 Interoperability Requirements

EnerNex evaluated and mapped the interface requirements between Power Analytics proprietary software Paladin-Controlled Power™ and smart appliances and devices. EnerNex completed the following activities:

- Evaluated requirements and mapped them to one or more technology independent information and transaction models suitable for use in project implementation. See Appendix B, Section 2.2.1 for results.
- Reviewed existing information models such as those defined in the OpenADR, OpenHAN, AMIEnterprise, OpenSmartGrid, and related groups that are developing and refining such models. See Appendix B, Section 2.2.2 for information models. See Appendix B, Section 2.1.2 for a summary of applicable standards reviewed for application-specific interoperability requirements.

3.3 Information and Transaction Model Framework

EnerNex finalized the information and transaction framework model for interoperability between Paladin-Controlled Power™ and smart appliances and devices. EnerNex documented the methodology for the collection of technology-independent information and transaction models that form the overall logical architecture of the information management and communications system. See Appendix B, Section 2.3 for information and transaction model results.

3.4 Information and Transaction Models

EnerNex specified implementation technologies for present-day requirements based upon previous findings using the Information and Transaction Model Framework and documented the final transactional models. See Appendix B, Section 2.4 for detailed results.

3.5 Field Testing and Acceptance Methodology

EnerNex developed a field testing and acceptance methodology to verify that system requirements could be met by the system design and can be field-upgraded as required to support new functionality and manage technology change. See Appendix B, Section 2.5 for detailed results.

3.6 Market-Significant Smart Appliance Recommendations

The goal of this task was to recommend wider demonstration opportunities that avail themselves to a community-scale market as large as UCSD. EnerNex identified smart appliances that are compliant with the architecture and standards identified in previous tasks for field testing on the campus. See Appendix B, Section 2.6 for recommended appliances.

3.7 Concept Validation and Preliminary Decisions

The goal of this task was to ensure that each successive step is completed and validated before proceeding to the next step of research. EnerNex completed the following activities:

- Collaborated with researchers for lab and in-the-field demonstration work. See Appendix B, Section 2.7.1 for detailed results.
- Developed a field test methodology that can be used for testing and validation of the microgrid design. See Appendix B, Section 2.7 for detailed results.

- Validated the Steady-State Analysis performed by Power Analytics. See Appendix B, Section 2.7.6 for detailed results.
- Validated the Transient Analysis performed by Power Analytics. See Appendix B, Section 2.7.7 for detailed results.

Table 2 shows a comparison of results received from three different sources to validate the EnerNex model.

Table 2: Model Validation Results Table Format

30% Near	Actual time	Grid Supply		PV Generation		System Load		System Losses	
		Active Power [kW]	Reactive Power [kVAr]	Active Power [kW]	Reactive Power [kVAr]	Active Power [kW]	Reactive Power [kVAr]	Active Power [kW]	Reactive Power [kVAr]
Results from Power Analytics Report	8:00 AM	751	419	19	0	744	374	26	45
	10:00 AM	731	417	39	0	744	374	25	44
	12:00 PM	571	407	195	0	744	374	22	33
	2:00 PM	584	407	182	0	744	374	22	34
	4:00 PM	634	403	123	0	744	374	22	36
	6:00 PM	744	419	25	0	744	374	26	45
Results from EnerNex DesignBase Simulations	8:00 AM	751	419	19	0	744	374	26	45
	10:00 AM	730	418	39	0	744	374	25	44
	12:00 PM	571	407	195	0	744	374	22	33
	2:00 PM	584	408	182	0	744	374	22	34
	4:00 PM	644	411	123	0	744	374	23	37
	6:00 PM	745	419	25	0	744	374	26	45
Results from EnerNex EMTP-RV Simulations	8:00 AM	752	420	19	0	744	374	27	46
	10:00 AM	731	418	39	0	744	374	26	44
	12:00 PM	571	408	195	0	744	374	22	34
	2:00 PM	585	408	182	0	744	374	23	34
	4:00 PM	645	412	123	0	744	374	24	38
	6:00 PM	746	419	25	0	744	374	27	45

3.8 Fuel Cell Integration into Master Controller-Optimizer

The goal of this task was to fully integrate the operational functions of the 2.8 MW molten carbonate fuel cell DFC3000MA (Figure 6) to operate in an autonomous fashion with the microgrid controller in modes ranging from islanding to demand response. EnerNex defined the system and functional requirements for the microgrid controller. See Appendix B, Section 2.1 for detailed results that include both system and functional requirements for the master controller-optimizer.

Figure 6: UCSD's Directed Biogas Fuel Cell, 2.8 Megawatt Baseload

3.9 Prepare a Production Readiness Plan

The goal of this task was to determine the steps that will lead to the manufacturing of the technologies developed in this project or to the commercialization of the project's results. EnerNex defined the system Production Readiness Plan requirements and prepared recommendations for product standardization for the microgrid controller. See Appendix B, Section 3.1 for production requirements and Section 3.2 for production recommendations.

CHAPTER 4:
Data Acquisition, Analysis, and Visualization

OSIsoft, LLC is a software house providing state-of-the-art corporate solutions in enterprise management of real-time data and events through their PI Systems. OSIsoft has a client base representing roughly 65 percent of North America's power generation and all Regional Transmission Operators (RTOs) and Independent System Operators (ISOs). OSIsoft has an established and ongoing relationship with UCSD through the San Diego Supercomputer Center and the Dynamic Systems & Control Group dealing with PMU data analysis. The PI system collects approximately 85,000 data streams per second from the demand, storage, and supply sources within the microgrid. Figure 7 shows the data flow from remote devices, through the microgrid controller, to the PI system and others.

UCSD teamed with OSIsoft as its vendor partner to develop class analytical capability consisting of multiple servers each capable of archiving over 500,000 events per second while delivering 10,000,000 simultaneous events to hundreds of clients. USCD is archiving over 85,000 data streams at sampling rates from 60 Hz to one per minute and has over 33 gigabytes of archived data from the microgrid including PMU data. Figure through Figure show graphical examples of the data collected from some of UCSD's resources. Figure shows weekly load data collected from some of the large buildings on campus. Figure shows UCSD's overall imported electricity from SDG&E as a direct access customer.

Figure 7: The Data Acquisition, Cleansing, Mining, Analysis, and Visualization Topography

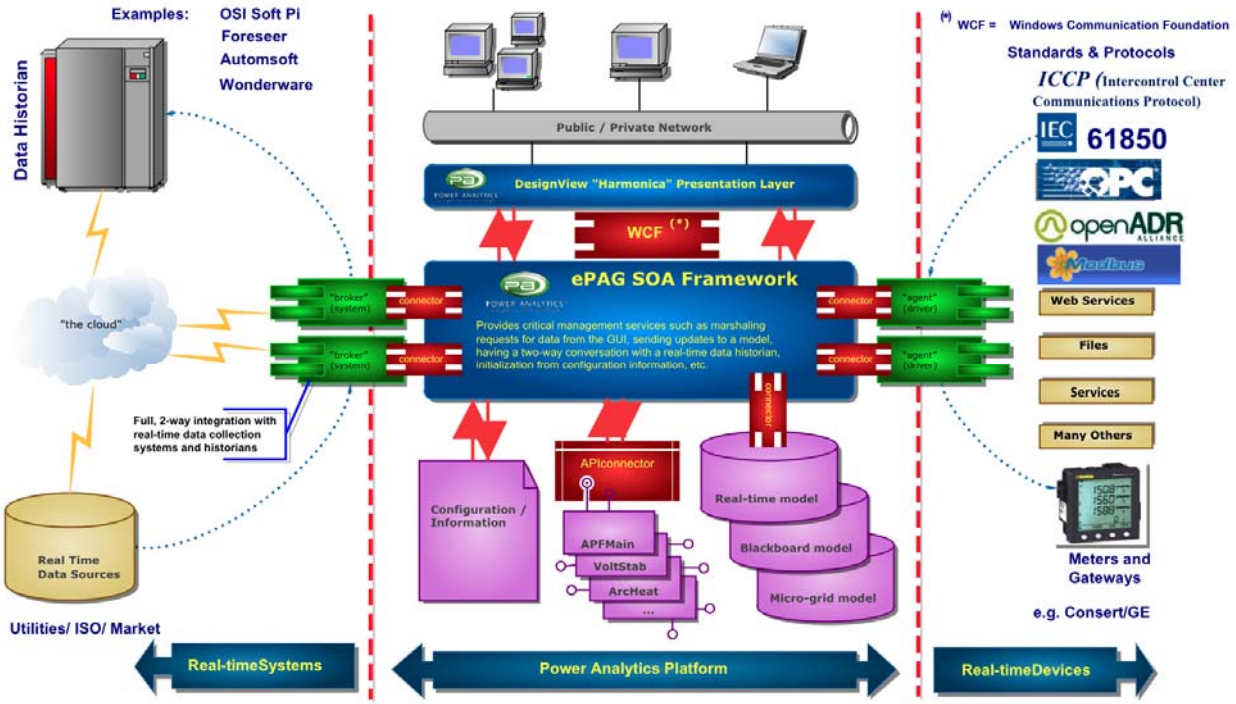

Figure 8: Gas Turbine Performance Profile

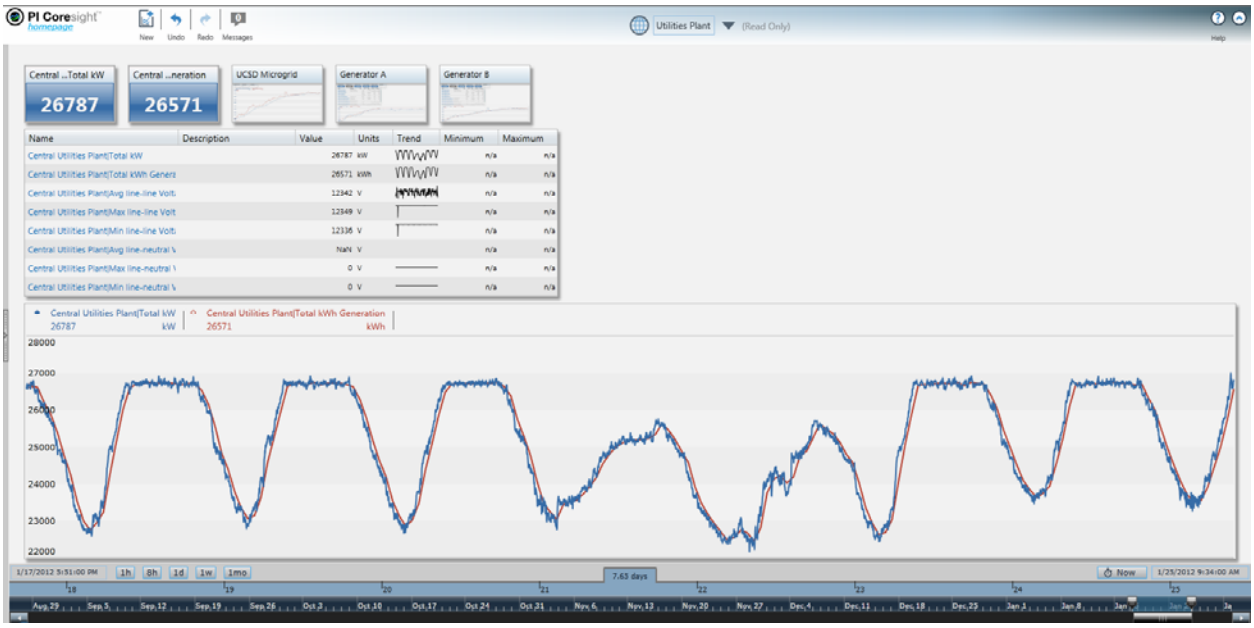

Figure 9: Fuel Cell Performance Profile

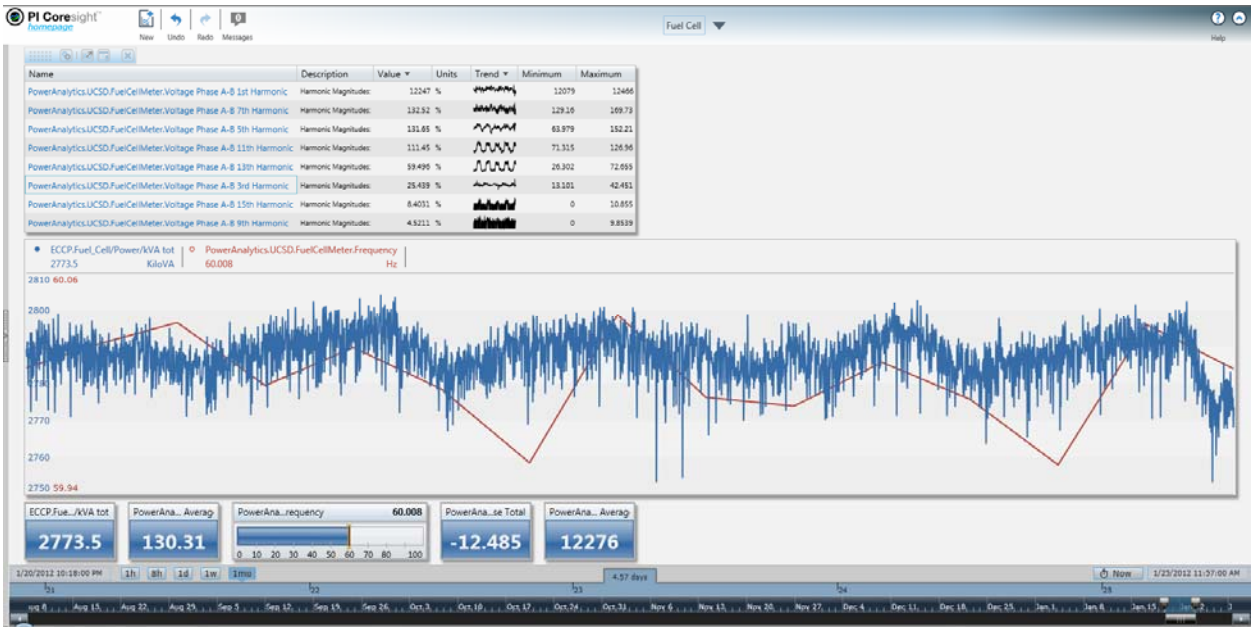

Figure 10: Solar Plants Performance Profile

Figure 11: Weekly pattern of large campus buildings

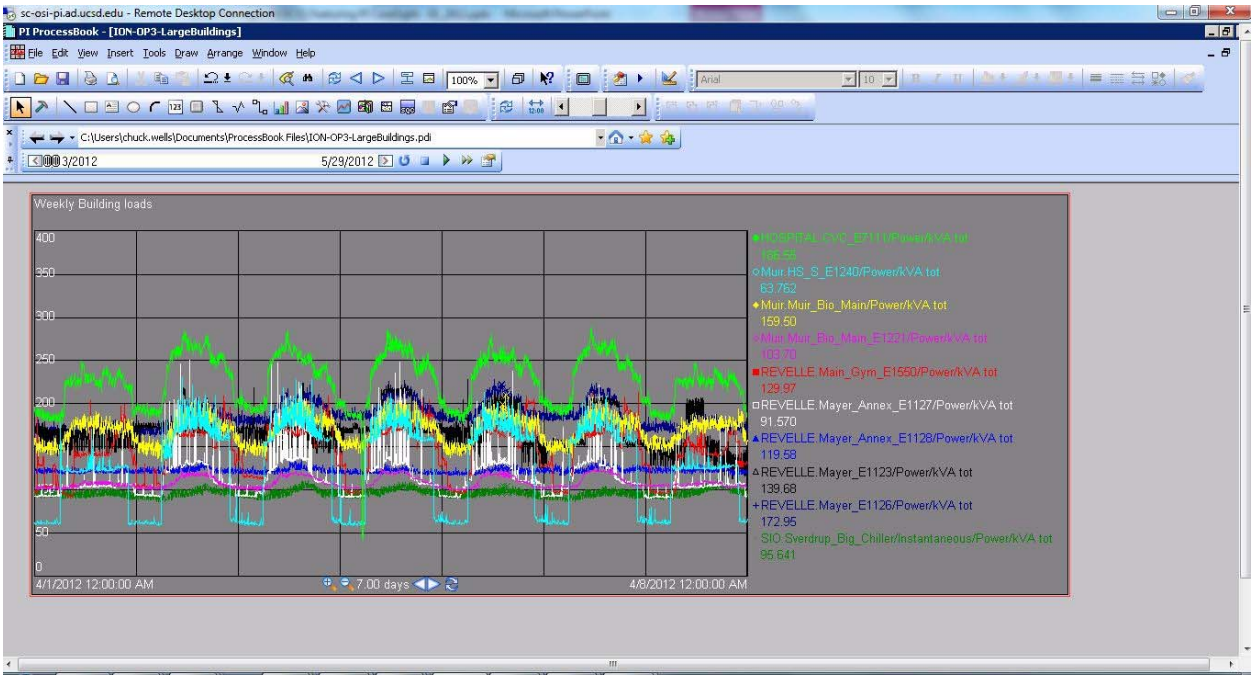

Figure 12: Imports as a SDG&E Direct Access Customer

CHAPTER 5
Demand Response

When either the California ISO declares a demand response event or SDG&E declares a Critical Peak Pricing period, the campus is notified that energy demand reduction is needed between certain times of the day. Usually these situations are prompted by high temperatures taxing regional power reserves. Without demand reduction, SDG&E and the California ISO may be required to take actions to stabilize the utility grid. UCSD Facilities Management will automatically reduce power demand by adjusting campus comfort cooling settings. Heating, ventilation, and air conditioning in office areas go into "unoccupied" mode and spaces become warmer or cooler than normal, depending on the space. Temperature set points in lab areas will range between 68 and 76 degrees Fahrenheit. Airflow will not be affected.

In 2012, UCSD participated in a special SDG&E DR tariff and conservatively bid 5 MWH/hr on each day ahead since SDG&E would only pay for levels less than 150 percent of bid. The DR tariff was $500/MWH incentive for the each of the four-hour periods. On August 12, 2012, UCSD provided an average of 7.1 MWH and earned $14,557. On September 9, 2012, UCSD provided an average of 9.1 MWH/hr and earned $15,269. On October 12, 2012, UCSD provided an average of 8.7 MWH/hr and earned $12,643. UCSD is the single largest demand response participant in the SDG&E service territory. Figure 17 shows the total campus load, Central Plant production, and imported electricity during a demand response event from August 23-25, 2010.

Figure 13: UCSD Demand Response for August 23-25, 2010

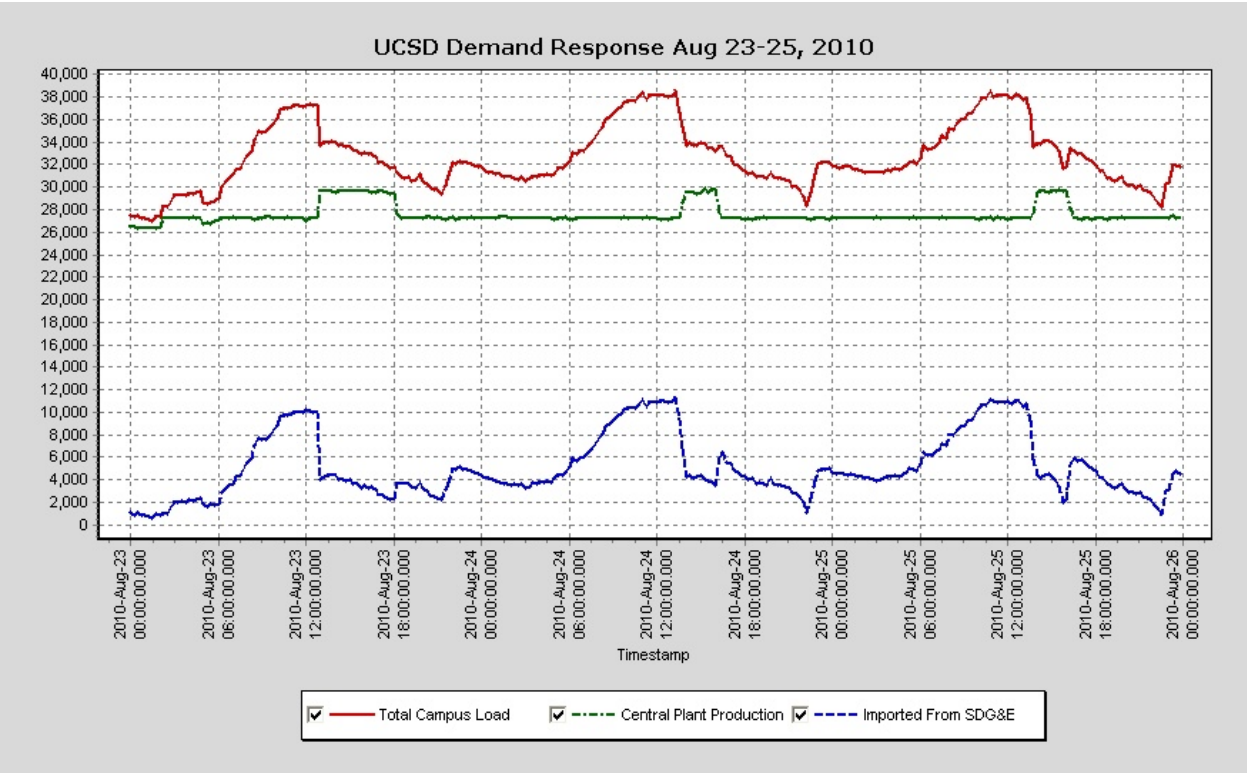

Figure 18 shows the individual performances of various campus generation sources and the imported electricity during a demand response even on August 15, 2012.

Figure 14: UCSD Demand Response on August 15, 2012

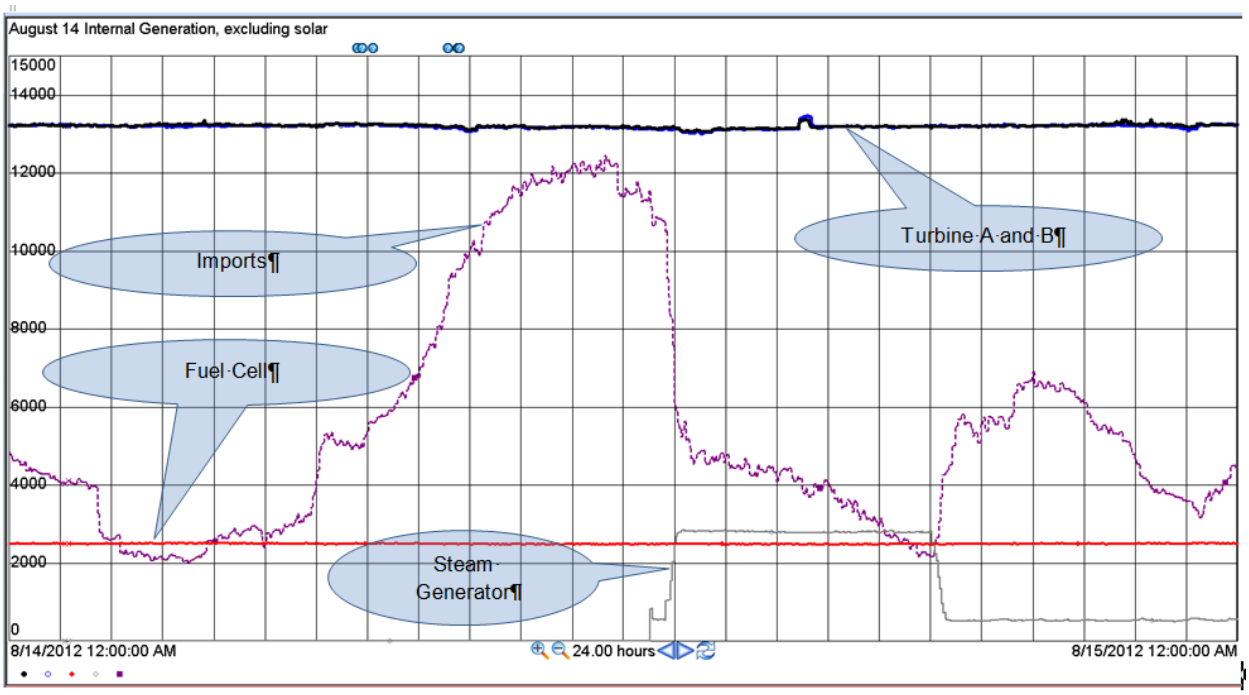

CHAPTER 6:
Market Connectedness

CleanTECH San Diego's (CTSD's) role was to provide market connectivity between the research at UCSD and the surrounding community beneficiaries. Target beneficiaries included both stakeholders in the San Diego region and more broadly throughout California. CTSD's objective was to: 1) create a network of stakeholders initially throughout the San Diego region to serve as the market link; 2) organize and coordinate appropriate content from partners such as Latham & Watkins and others; and 3) hold at least one conference and one briefing to begin the process of transferring learning and receiving feedback.

CTSD accomplished its objectives through activities in its Sustainable Communities Program and the Clean Renewable Energy Bonds (CREBs) Coalition. The CTSD Sustainable Communities Program has two primary components: the Street Light Working Group (SLWG) and Greening San Diego program. The SLWG provided local municipalities with an unbiased analysis of available, energy-efficient streetlights for retrofits and provided a repository for sharing best practices associated with streetlight retrofits. All eighteen municipalities in the region participated. CTSD manages and coordinates the SLWG to provide our local municipal partners. We hold regular working group meetings, produce meeting results and minutes, and use a secure electronic drop box to facilitate the sharing of information and best practices. The Greening San Diego program is a strategic partnership led by CTSD and local municipalities that is designed to accelerate the adoption of sustainability solutions.

The City of Santee and City of Lemon Grove were selected to serve as CTSD's pilot partners in launching the Greening San Diego program, based on a number of factors including size of municipality, location, and makeup of residents, etc. CTSD identified and is actively facilitating best practice sharing amongst the region's municipalities in the following areas.

- Climate Action Plans
- Sustainable Energy Loading Order Prioritization
- SDG&E/San Diego Area Governments (SANDAG) Energy Roadmaps
- United States Department of Energy (DOE)/Energy Commission Grant Applications
- Request for Quotation Templates
- Incentives and Rebates
- Sustainable Water/Waste Best Practices
- Community Education and Outreach

In addition, CTSD continues to support the CREBs Coalition.

CTSD created multiple stakeholder coalitions to effectively transfer knowledge from UCSD—a community in and of itself—to other regional communities. The SLWG, Greening San Diego

program, and the CREBs Coalition are each comprised of municipalities including cities, schools, universities, one water agency, private sector service providers and experts, and private sector technology providers.

CTSD worked with a series of partners to transfer expertise and knowledge from both the University and the private sector to municipal organizations. With a daily population of 45,000, UCSD has the size and complexity of a small city. Responding to a state mandate to reduce its energy consumption 10 years ago, UCSD is now among the greenest campuses in the country and is a living laboratory of proven state-of-the-art solutions. Coupling this successful sustainability model with the utility's broad portfolio of sustainable programs and incentives, the "Greening San Diego" program enables participating municipalities to repopulate this business model.

CTSD convened a series of meetings and briefings with the target group of stakeholders during the grant performance period. Several meetings were held to outline best practices occurring on campus and in other venues for the benefit of community stakeholders including municipal agencies. Service providers including legal, financial, and engineering agencies were also on hand and made several presentations regarding various matters of interest. CTSD hosted representatives from the National Institute of Standards & Technology (NIST), the National Renewable Energy Lab, and the Feed-In Tariff Coalition. Meeting content ranged from information on feed-in tariffs, CREBs financial models, and actual progress reports on project implementation of both solar systems and streetlights.

More progress was made than was anticipated primarily due to the opportunities presented with the CREBs Coalition win. During the period of September 1, 2010-December 31, 2010, CTSD organized, hosted, or sponsored over seven meetings, luncheons, or events. Because of positive press surrounding the SLWG's success, CTSD is actively working with municipalities in Orange County as we transfer our program structure and lessons learned.

6.1 Opportunities for Community Representative Input on Technical, Economic, and Environmental Barriers to Implementation

The goal of this task was to provide the initial overture to RESCO communities and their representatives to participate in the market connectedness tasks. UCSD and CTSD analyzed the draft phrasing and task plan for the collateral project to identify opportunities to facilitate community representative input on potential technical, economic, and environmental barriers to the implementation of similar projects within actual communities.

6.2 Project Briefing and Proposed Input Schedule

The goal of this task was to develop the project briefing that was used by the Community Advisory Committee (CAC) for providing input into the review process. UCSD, CTSD, and San Diego State University Research Foundation (SDSURF) provided a project briefing outlining potential barriers for consideration by community representatives invited to participate in the CAC. The briefing served to both orient CAC members to the collateral project and to focus

their attention on the barriers that may limit the transferability of the technology applications within a community energy system context.

6.3 Interim Project Report Review and Proposed Revisions

The goal of this task was to provide the CAC representatives with interim progress reports and distribute useful feedback in a timely fashion. UCSD, CTSD, and SDSURF facilitated CAC's review and comments on the interim collateral project report, conveyed comments to the technical project research team, maintained a record of the teams' intended resolution of those comments/issues, and provided those resolutions to CAC members.

6.4 Regional RESCO Community Financing

UCSD's accomplishments in RESCO Community Financing included the following

- Co-leadership of regional CREB applications that netted $154 million and 25 MW of PV for the San Diego region.
- Co-leadership of regional financing and buying pools.
- Site-hosted CREBs leadership workshop at UCSD in first quarter of 2010.
- Site-hosted International Microgrid Symposium in September 2009.
- Site-hosted revised Communities for Advanced Distributed Energy Resources meeting in April 2010.
- Site-hosted DOE's 1st Annual Microgrid Workshop August 2011.
- Site-hosted DOE/California Public Utilities Commission (CPUC) PV Integration and Solar Forecasting Workshop in March 2011.
- Site-hosted for the Society of American Military Engineers in November 2012
- Organized microgrid tours for DistribuTECH, Power Engineering Society, IEEE, Montreux Energy, and Solar Energy Power.

The San Diego region received 19 percent of the total U.S. Clean Renewable Energy Bonds (CREBS). For the first round of CREBS, UCSD received $5.6M CREBs allocation from US Treasury and obtained 15-year bond at 2.07 percent from Bank of America. Additionally, UCSD reserved $1.2M CSI incentive at $0.19/kWh. The project involved 830 kW at five off-campus sites, and it will save about $2M over 20 years.

For the second round of CREBs, UCSD received $6.3M from the US Treasury and obtained a 10-year bond at 0.0 percent from Bank of America. Additionally, UCSD reserved $0.9M CSI incentive at $0.139/kWh. The second round provided funding for 864 kW of PV at seven different sites on campus.

UCSD is a partner to many of San Diego's regional clean technology companies as shown in Table 3.

Table 3: San Diego Regional Private Sector Partners with UCSD's Microgrid

Envision Solar from Kearney Mesa	Kyocera from Kearny Mesa
Sullivan Solar from Encinitas	IES of San Diego
SDG&E Sustainable Communities	Power Analytics Rancho Bernardo
Aerovironment	CA Center for Sustainable Energy
BioFuels Energy, LLC	Soitec
Borrego Solar	San Diego State University Research Foundation

6.5 Barriers and Risks Impeding Financing and Development

SDSURF analyzed the barriers and risks from the standpoint of the larger power system's configuration and operations as well as from the standpoint of individual project development.

6.5.1 Systems-Related Barriers and Risks

The current regulatory framework supports a centralized electricity system based on assumptions of inelastic demand and generation pricing. Within this framework, transmission networks were developed to serve vertically–integrated, regulated utilities and distribution systems that have not operated as system networks. The historic configuration of centralized power generators connected to local customers via radial grids is becoming less practical in a restructured national electrical market. Moreover, within this systems structure, demand-side management (DSM) has been compartmentalized from supply-side management. In a vertically-integrated electricity market, distributed generation either has displaced electricity from the grid or has been exported back to the grid. Distributed generation (DG) market access has been limited through utilities. While undergoing change, the current system can be characterized by a unidirectional power flow, and utilities have been essentially volume-driven commodity providers with profitability based on revenue from the sale of megawatt hours.

On the other hand, current demands on the centralized electricity regime have been developing outside of the regulatory framework that governs it. These demands, arising from market, technology, and policy changes, are challenging a system that allocates authorities between federal and state jurisdictional levels. Moreover, these demands are challenging traditional priorities of state public utility commissions (PUCs) for whom cost is of most importance, with reliability second, and environment and resource diversity third. These changes are creating a greater need for planning at all operational levels and putting into question the appropriate roles of the Federal Energy Regulatory Commission, ISOs/ RTOs with state public utility commissions, and transmission and distribution utilities.

Under the current regulatory framework, separate entities subject to separate jurisdictions make it harder to value distributed resources. Moreover, priority setting for investments is not informed by DER needs assessments. At the same time, different developments are putting our electricity system at greater risk. Increasing the integration of large amounts of intermittent

renewable generation into the bulk power system is presenting challenges to the electricity system's reliability and efficiency. Also, microprocessor-based technologies have radically altered the nature of the electrical load, resulting in electricity demand that is incompatible with a power system created to meet the needs of an analog economy. This has led to electricity reliability problems and inadequate power quality. Technological sophistication of the electricity grid has not kept pace with the growing demand for high-quality, high-value services to end users.

Legacy system pricing structures and economic disincentives with respect to market access have significantly affected DER economics. Technology advancements and new customer needs are calling for a more flexible regulatory and policy framework that values benefits and reduces barriers with respect to DER development, protects the grid's infrastructure, and assures that new power sources do not undermine the economic and operational viability of existing facilities. Also, governmental intervention is needed to provide DG fair and non-discriminatory access to the distribution system and improve DG's ability to compete in the wholesale market for energy, reserve or ancillary services, and perhaps eventually in liberalized retail markets. Currently there are difficulties in pricing the grid-side benefits of DER, and smaller generators have special difficulty in interconnecting with the grid and participating in the marketplace under current wholesale market trading rules.

A new "power value chain" is emerging that questions the limitations of utility service, area-oriented planning against a need for regional scenario planning to evaluate, short-and long-term, policy and technical factors with respect to optimizing the transmission and distribution (T&D) system and taking least cost investment strategies that include all electric resources. At the same time, utilities remain under pressure not only from their lenders and shareholders to limit spending and minimize cost exposure, but also from regulators and ratepayers to concentrate their investments in areas that address relatively near-term concerns.

Structural and operational disincentives pose barriers to utility investment in or procurement of distributed energy. Some policies addressed smart grid technology investment as an end-goal rather recognizing the enabling function of such investments. Smart grid design and investment could play a crucial role in clarifying responsibilities among diverse market players (utility and non-utility generators, ISOs, RTOs, PUCs, system integrators, manufacturers/vendors, etc.), rationalizing a "patchwork" transmission system, balancing federal and state interests, and identifying business opportunities.

6.5.2 Project-Related Barriers and Risks

An array of technical, policy/regulatory, market, institutional, and financial barriers and risks (fuel price risks, environmental risks, other uncertainty factors with respect to resource decisions) affect the economic viability of DER development, especially for smaller projects:

- Technical and associated business practices need more uniform and tiered technical standards for interconnecting distributed power to the grid, while assuring system integrity, reliability, and safety.

- Greater standardization is needed for utility review of DG interconnection and agreements rather than a case-by-case approach.
- Utility regulatory barriers need to not only decouple utility returns from megawatts sold, but also to align utility incentives to promote DER.
- Regulatory principles should be compatible with distributed power choices in both competitive and regulated markets.
- New regulatory tariffs and utility incentives should be designed to complement a new distributed power model.
- Site permitting and environmental regulatory barriers
- Financing barriers due to high upfront capital costs (need for financial incentives to make DER economics favorable for third parties, utilities, and industrials).

These barriers and risks associated with investment in demand-side resource development need to be confronted so that DER can contribute both to an efficient, reliable, sustainable, and affordable electricity network, as well as to modernizing local infrastructure and the built-environment. An important way of addressing the DER barriers and risks will require evaluating the barriers and risks associated with the development of distributed power control technologies, control systems, and microgrid-based power systems (microgrid systems defined as integrated and autonomous aggregations of DER within a controlled system, localized to a customer(s), community, or region which balances load and generation) – distributed networked electricity. Such assessments involve the evaluation of such factors as the unpredictability of whether consumers would buy-into such network control systems; the absence of large scale control systems; difficulties in scheduling the introduction of demand response, DG, and storage at customer sites to develop an effective aggregate for microgrid control; and the need for education and coordination with regulatory agencies. These growing considerations place a premium upon microgrid demonstrations.

6.6 Smart Grid Barriers

The characteristics of our centralized power system present concrete barriers and incompatibilities associated with using smart grid technologies to integrate DER into utility systems planning and operations, the grid, and the market.

6.6.1 Technology Requirements, Infrastructure, and Interoperability

Most significantly, ongoing demonstrations are addressing a lack of technology requirements, infrastructure, and interoperability. In connection with the development and deployment of smart grid technologies, there is a lack of appropriate technical operations and decision-making models, insufficient communication and control infrastructure, and the lack of interoperability standards. Accepted standards and process/protocols are needed to aggregate and automate DERs to meet system operator requirements. Because the smart grid is in its infancy, and because component technologies are evolving rapidly, utilities and third parties face significant challenges in ensuring that components will work together, both now and in the future. The

lack of standards also increases the risk of premature obsolescence as component technologies evolve into products that are not compatible with legacy systems.

6.6.2 Appropriate Regulatory Structures

Microgrid demonstrations are focusing on developing "game-changing" capabilities using smart grid technologies. By using new software and hardware, utilities and third parties will be able to combine, from any source within a smart grid or microgrid eco-system, distributed generation, storage, and loads into a "virtual power plant" (VPP) that is fully dispatchable in the organized capacity and real-time energy and ancillary power markets. These new capabilities raise significant legal and policy issues for a "centralized" electricity system that has been supported by bulk power supplies and that has measured business success by megawatts sold. While change is underway, the current regulatory system does not adequately compensate utilities for reliability, efficiency, and customer service. There is a lack of appropriate incentives for utilities to use smart grid technologies to help customers save energy or to change load shapes; a lack of incentives to provide consumers with time of use/dynamic rates; a lack of guidance for smart grids, microgrids and VPPs; and a lack of reliability standards for the electrical grid commensurate with technical capability available. With rapidly changing technologies in the marketplace, utilities face the risk of technological obsolescence or "stranded assets." Current regulatory structures also place constraints upon utilities that limit or confine their ability to take active roles as market players and to create "value" through assuring more efficient and intelligent functioning of our power generation and delivery system. If grid modernization focuses on the development of distributed energy networks, there will be a need for regulatory change to authorize utility participation to achieve a networked environment across the distribution systems nationwide, especially if customers own many of the assets.

6.6.3 Cost-Effectiveness Criteria and Valuation Methods

Smart grid applications are very new, so at present there are no widely agreed upon methods for measuring impacts, benefits, costs, and cost-effectiveness. Some benefits are private (e.g., efficiency improvements which can be measured as bill savings) and some are public (e.g., reduced carbon emissions which are harder to monetize). There are no established rules on how to treat these benefits in determining within regulatory proceedings whether a project is cost-effective and reasonable from a regulatory/public policy standpoint. Moreover, there is no universally accepted means for relating the functional capabilities of smart grid projects to specific benefit streams. A functional perspective is essential because many technology configurations will be used in a variety of ways. Specifying the role of a system's functions is necessary for establishing how its operations reduce costs and/or produce more benefits compared to the technology to be replaced. Lack of appropriate valuation methods translates into uncertainty and regulatory risk. For multi-state utilities, the problem is compounded by the lack of consistency in state approaches to grid modernization.

6.6.4 Incompatible Market and Pricing Structures

The power markets predominantly serve a centralized, bulk supply system that is based on assumptions of generation pricing and inelasticity of demand. These market and pricing structures have been incompatible with energy decentralization and a distributed energy

integration model. Institutional barriers surround the need to better connect wholesale with retail electricity markets and to bridge organizational silos to achieve "end-to-end" integration from wholesale to retail market and down to end-use. Greater transparency of energy usage and pricing information and access to real-time pricing are needed to spur responsive load for more market price elasticity. Overall, there is a lack of market rules to enable and empower utilities, consumers, and suppliers to innovate and invest in technologies and services that produce a range of measurable results. Smart grid innovations are critical to bringing about changes necessary to enhance market outcomes – which would in turn result in a more efficient allocation of resources and better balancing of supply and demand.

6.6.5 Cybersecurity Risks

Securing networked communications, intelligent equipment, and information is critical to the operation of the future smart grid. The introduction of many new entry points and the fusion of different communications media with power increase the probability of cybersecurity risks. Demonstrations are addressing cybersecurity considerations in every aspect and phase of the development and implementation of the distribution system infrastructure and operations, taking into account numerous standards at all levels of information technology and the grid infrastructure (e.g., NIST, North American Reliability Corporation), and assuring that all security domains are managed and secured through a consistent set of security policies and processes.

6.6.6 Customer Acceptance and Engagement

Since a key characteristic of the smart grid is that it will be far more interactive than the legacy grid, learning how to engage, educate, and motivate customers is critical for success by utilities and third parties. Barriers impeding their ability to engage end-use customers include consumer reluctance to invest in new, untried smart grid technologies (e.g., DER controls). Customers also are reluctant to cede operating control of onsite resources or open themselves to greater intrusion into their privacy. Lack of dynamic pricing at the retail level stymies engagement.

Active customer engagement will be required to secure sufficient DER response in support of grid needs. In addition, different market segments have different interests. Moreover, customer expectations are changing regarding power delivery and services. A new grid operating system will need to accommodate increasing consumer demands for independence, convenience, appearance, environmentally friendly service, and cost control. In the case of premium customers, there are expectations that the smart grid will produce measurable performance outcomes and benefits - improved reliability and power quality; improved conservation and energy efficiency (total electric system efficiency with lower total costs), reduced environmental impacts; system security; the ability to pay for improvements by eliminating waste, choice regarding technology suppliers; access to real-time energy usage data; and accurate, automated, efficient, and consistent metering reading.

6.6.7 Third-Party Participation

Smart grid technologies already are creating opportunities for third parties to provide products and services through utilities or directly to customers. Partnerships between utilities and third parties provide home energy management services and products, including web-based portals

and in-home displays. Third parties have been engaged by utilities to aggregate demand response among multiple commercial and/or residential customers. Collaboration will be required between utilities and a host of third party market players with analytics, technology development, systems integration, data processing and management, utility system operations management, and customer energy management and product design. Steps will need to be taken to protect grid operational data and to establish new market rules that are fair to both utilities and third parties. Smart grid components need to be tested and certified to ensure compliance with adopted interoperability standards. Product manufacturers and third party providers need to be held accountable if their products or services cause economic loss, injury, or damage.

6.7 Barriers to Sustainable Energy Planning

There are compelling reasons for local governments to become involved in sustainable urban energy planning. Smarter energy use can reduce energy costs, improve public health and safety, enhance economic development and environmental quality, increase social equity and environmental justice, and raise living standards and the overall quality of life. With the increasing availability of energy supply and end-use technologies, local governments also are seeking to achieve a higher level of control and self-sufficiency with respect to their access to energy resources.

However, there also are significant obstacles to sustainable energy planning by local governments. Primary among these are significant financial constraints, competing priorities, lack of knowledge and technical expertise, little incentive to undertake energy-related activities outside of managing their own consumption, lack of control of the resources required to engage in comprehensive energy sustainability planning, and regulatory obstacles.[3]

To date, local governments have engaged in sustainable energy planning in three principal ways: (1) Reducing energy consumption within their own facilities and operations; (2) Promoting efficient energy use and alternative resources in the private sector through judicious use of incentives, regulations, and demonstration projects; and (3) Shaping local land use and development patterns to reduce per capita energy use and improve environmental quality.[4] Such efforts have largely been undertaken separately rather than in an interrelated and systemic manner. Furthermore, the efforts have been predominantly project-oriented, aimed at addressing the environmental impacts of energy use in stationary and mobile sources by increasing efficiencies within buildings, installing alternative energy in municipal facilities and fleets, and promoting mass transit and alternative mobility strategies. However, these efforts have not been guided or prioritized by strategic planning that seeks to address future growth

---

3 Energy Commission Roadmap at 24-26.

4 Ibid, 27.

and uncertainties and to assess a broad range of options based upon systemic community evaluations.

6.8 Community Planning for Integrated Energy Solutions

Community context is vital to the RESCO program. Officials recognize that realizing the fuller potential of energy efficiency and renewable energy is quite dependent on the form and parameters of a community's infrastructure and built environment. In calling upon local governments to become testing beds for new innovative approaches, the RESCO program is challenging municipalities to undertake sustainable energy planning to influence fundamentally the way in which energy is used through assessing how and where development and redevelopment takes place.

6.9 Defining Sustainable Urban Energy Planning

Sustainable urban energy planning integrates sustainable energy,[5] clean energy technologies[6], and responsible resources management strategies for the development of economically, socially, and environmentally healthy communities. The ultimate aim is to bring about a paradigm shift to energy and resource use within all of the functions of a community and to change infrastructure parameters and development patterns by affecting how and where we build and how we generate, deliver, and use energy. Sustainable energy planning seeks to strike a new balance in the dynamics between energy and resource supply and demand by fusing energy and resource efficiency with "smart growth," "smart grid," "intelligent transportation system management," and similar strategies within the following framework of community planning and design principles:[7]

1. Sustainable Use of Energy Resources: Planning and design should maximize the efficient use of energy resources across all end uses, while minimizing direct and indirect adverse impacts on the environment.

---

5 "Sustainable energy" is energy saved through efficient end-use practices or derived from non-depleting, "renewable" energy resources such as solar, wind, biomass, geothermal and low-impact hydroelectricity.

6 "Clean energy technologies" refers to those energy supply or end-use technologies that, compared with conventional technologies currently in commercial use, emit substantially lower levels of GHG and air criteria pollutants over their life cycle and generate substantially smaller or less-toxic volumes of solid, liquid or gaseous wastes. Clean energy technologies include those that allow the production, transport, storage, and use of fossil energy resources with relatively high efficiency and relatively low impact on the environment.

7 D. Newman, Gas Technology Institute at 4-5, GTI Model Design at 15-16, *Planning & Design Guidelines for Energy-Efficient Community Development*, 2004.

2. Ecological Community Form and Function: Planning and design should emulate nature to maximize the benefit of natural systems and preserve and restore the natural environment. Urban functions should be managed to reinforce natural flows and characteristics, creating a balance and mutually supportive cycle of interaction between built and natural environments.

3. Environmentally Sound and Energy Efficient Land Use Optimization: Planning and design should seek to minimize the consumption of energy, material, and natural resources by restructuring and more efficiently utilizing the existing urban footprint. In addition, compact, mixed-use development, along with the co-location of compatible uses and increasing proximate loads, can enable cost-effective distributed energy resource applications and urban mass transit systems.

4. Energy and Environmental Technology Integration: Planning and design should integrate cleaner energy systems into development projects, using whole building and community-scale approaches to maximize energy performance and economic value, while minimizing adverse environmental impacts. Efforts should capitalize upon technology advancements, but promote integrated technical systems needed to expand the use of local renewable and recyclable energy resources, build sustainable local and regional energy networks, secure underground distribution systems for critical urban facilities, develop supply and demand network control systems, and establish more technology-ready infrastructure.

5. Community Resources Management: Wherever possible, planning and design should engage community residents in the efficient use of energy and material resources by decentralizing resource management systems to the neighborhood level. Neighborhood-based systems should be designed to provide ongoing systemic management of community resources and promote shared energy resources and material and process efficiencies, based on town energy management plans.

6. Social Equity and Economic Vitality: Energy-efficient planning and design should increase access to affordable housing, public services, and employment for lower-income populations and stimulate local economic opportunities.

Sustainable urban energy planning seeks to reconcile environmentally sound energy and resource use with exponential urban growth by taking a total energy and environmental systems approach to land-use development and urban design. This approach integrates planning for traditionally disparate sectors such as transport, waste, water, and energy to better characterize future energy demand and influence supply strategies. This systems methodology enhances individual technology, facility, and sector approaches and applications.[8]

---

8 GTI Model Design at 10, 17-24. The CPUC 2008 EE Strategic Plan recognizes the importance of evolving a "total systems" approach. The Plan emphasizes that "it is critical to develop a shared vision and process

Smart Energy Planning that is combined with Smart Growth Design[9] and Smart Grid[10] and carried out as part of land use development and growth management processes can help to bring into better balance energy supply with demand, including facilitating the orderly, capital efficient and environmentally sound application of DERs. Sustainable energy planning is necessary to advance "integrated energy systems" approaches for integrating and optimizing clean and efficient energy technologies within development projects to accelerate the combined use of renewable energy and advanced end-use and smart grid enabling technologies within a community's built-environment and infrastructure. A systems approach will not only increase the effectiveness and economic reliability of renewable energy deployment within the community context, but also yield numerous co-benefits that include reliability considerations, peak demand reduction, transmission congestion relief, reduction of transmission losses, and higher fuel-to-energy conversion efficiencies from partnering renewable energy technology with combined heat and power systems. Furthering integrated energy systems solutions that combine a mix of local renewable energy sources with community-based energy efficiency, smart grid, energy storage, CCHP, and district energy and demand response capabilities could improve overall performance and operational efficiency while lowering costs and environmental impacts.

Sustainable energy planning is a long-term oriented, evolutionary process and one that needs to arise from consensus among community businesses and residents. Oftentimes, it is undertaken within the context of climate or sustainability planning. A key means of effecting sustainable energy planning has been through public-partnerships that afford flexibility, are adaptive to

---

for regulatory coordination in California to support the energy savings benefits of DSM integration [across resources] and to ensure consistent and mutually supportive energy, water, air, and GHG policy and regulations" at 72. Sustainable energy planning would enhance the prospects for achieving DSM integration solutions that support energy and carbon goals in the present, and further water and other resource conservation goals in the future.

9 Smart Growth refers to a compact, efficient, and environmentally sensitive pattern of development that provides people with additional travel, housing, and employment choices by focusing future growth away from rural areas and closer to existing and planned job centers and public facilities. Smart growth addresses environmental impacts of energy use. It promotes development patterns that increase energy efficiency and create conditions for economically viable distributed energy resource development. Its elements include the remediation and reuse of industrial brownfields, redevelopment of outdated structures and vacant properties, mixed-use projects, higher residential densities, diversity in building and housing types, and multi-modal transportation.

10 As discussed earlier, Smart Grid refers to an electricity transmission and distribution system that incorporates elements of traditional and cutting-edge power engineering, sophisticated sensing and monitoring technology, information technology and communications to provide better grid performance and to support a wide array of additional services to consumers. Enabling smart grid technology has the potential to further the development of DER in a manner that can increase significantly the efficiency and dependability of energy use within communities.

different circumstances, and are effective vehicles for addressing gaps in the marketplace. These partnerships can provide a means for addressing and managing the risks associated with change and new technologies, including appropriately allocating those risks between the public and private sectors.

Another integral element is the development and application of modeling and analytical tools that can assess what changes are needed to foster energy and resource efficient community development, as well as to inform the structuring of public-private partnership arrangements to evaluate and implement cost-effective options. Effective decision support tools and methods are needed to: (1) Assess systematically the costs and benefits of alternative urban and rural design and site planning scenarios; (2) Enable city officials, development authorities, and planners to formulate municipality-wide energy management plans that consider all energy sources and all end-uses; and (3) Structure and fund effective energy and environment-related programs, measures, financing mechanism and partnerships to overcome technical, institutional, financial, and other barriers to sustainable development.

6.10 Chula Vista Sustainable Energy Planning

"Community-scale" research pilots provide the opportunity to explore distributed energy combinations and configurations on the building and site levels within the framework of energy distribution and transportation loads. The Chula Vista project applied and tested new tools, methods, and practices to assess ways in which Chula Vista and other communities can capture the benefits of clean energy supply and energy efficiency without incurring undue technology risks and costs.

In California, the City of Chula Vista provides a good illustration of a community that began by addressing the environmental impacts of energy use in the context of its climate change and environmental management strategies, but that is increasingly integrating energy resource planning into its land use development and growth management processes and increasing its coordination with its utility, SDG&E.

Through an initiative funded by the Energy Commission and DOE known as the Chula Vista Research Project (CVRP), the National Energy Center for Sustainable Communities (as part of SDSURF) collaborated with the City of Chula Vista, SDG&E, and local developers to advance the state of sustainable energy planning. The project modeled the use of certain building energy technologies and community design features with respect to two large-scale greenfield development sites on the eastern side of Chula Vista, California.[11] One site was planned as a predominantly commercial mixed-use development on 206 acres of land. The other was planned as a predominantly residential mixed-use development on 481 acres of land. The

---

11 National Energy Center for Sustainable Communities at San Diego State University, *Energy-Efficient Community Development in California: Chula Vista*, Publication Number CEC-500-2011-019, pg. 5-6, 2011, http://www.energy.ca.gov/publications/displayOneReport.php?pubNum=CEC-500-2011-019.

technologies were bundled into the following three development options and modeled for 20 distinct building types planned for the two sites:[12]

- Energy Efficiency (EE) Option: advanced, highly efficient building envelope features, appliances, and space conditioning equipment.
- EE – PV Option: the EE option with the addition of solar photovoltaic panels.
- EE – Distributed Generation Option: the EE option with the addition of natural gas-based distributed generation technologies.

The following five alternative community design features were also modeled for each site:[13]

- Moderate-density, mixed-use, smart growth development
- Storm water runoff mitigation measures
- Carbon storage and sequestration measures
- Urban heat island mitigation measures
- Passive solar building orientation

The findings of the engineering and planning analysis are presented in a guide for development practitioners entitled, "A Building and Site Design Reference Guide for Energy-Efficient Community Development in California."[14] These findings indicate that combining advanced building energy technologies with community design features in a large-scale development project can reduce aggregate electric energy consumption (kWh) by approximately 43 percent; peak demand (kWh) by 45 percent; and carbon dioxide emissions by 35 percent, compared to a project designed for minimum compliance with California's Title-24 (2005) energy efficiency standard.[15]

In addition to the technical modeling and analysis, the CVRP researchers also conducted workshops, surveys, and interviews with key stakeholders to examine perceived policy, market and institutional barriers, as well as investment risks, impeding adoption of energy-efficient community development in California and to generate recommended solutions. Participants included developers, builders, investors, municipal development officials, utility planners, real estate market experts and members of both environmental and community advocacy organizations. These market and policy analyses found that, before "Energy Efficient

---

12 Ibid, Appendix A, Building and Site Design Technical Reference Guide for Energy-Efficient Community Development in California, 2.

13 Ibid, 2.

14 Ibid, 2.

15 Ibid, 3.

Community Development (EECD) features could become standard practice in the marketplace, a fundamental market transformation needed to occur, in which:[16]

- "The value of energy-efficient building technologies and community design features is recognized by all entities in the real estate development transaction chain; and that,
- This recognition results in market transactions that enable developers to capture capital investments in energy-efficient design features through real estate sale prices that are acceptable to consumers."

The research indicated that the following seven economic, information, policy, and procedural barriers must be addressed for these market changes to occur:[17]

- Split Incentive dilemma: a misalignment between investment costs and benefits
- Lack of consumer willingness to pay for the value of energy efficiency features
- Investment risks inhibiting the financing of EECD projects
- Lack of financial incentives for developers and builders
- Lack of municipal investments in enabling green infrastructure
- Lack of knowledge among municipal officials inhibiting approval of projects
- Lack of uniform municipal policies, procedures, and incentives

The researchers concluded that state and local government and utility interventions would be necessary to overcome these barriers and risks to the adoption of EECD practices in the marketplace. They found that it would take a combination of the following types of market "push and pull" efforts to transform the market to the point where EECD could be sustained without public or utility intervention:[18]

- Research to further estimate the economic and environmental costs and benefits of alternative energy technologies and community design features in large-scale development projects.
- California-specific site development standards based on energy efficiency and carbon emissions reduction performance.
- Tiered and performance-based direct and indirect incentives for developers and builders.

---

16 Ibid, 3.

17 Ibid, 3.

18 Ibid, 3-4.

- Product Labeling based on standardized ratings of energy and other resource use in individual structures and whole planned community development sites.
- Educational campaigns to inform the lending, investment, and real estate appraisal and brokerage industries about the value of energy and resource efficient buildings and community development.
- Development of real-time resource monitoring technologies and energy pricing.
- Workforce training initiatives for municipal authorities.

The CVRP's technical findings and market analyses serve as resources to public and private planning and development practitioners. In addition, the CVRP has made a valued contribution to institutionalizing sustainable energy planning within municipalities by applying and testing a toolkit of essential decision support tools and methods; evaluating the costs and benefits of alternative integrated energy solutions within the city's planning processes for site development; and clarifying critical ways in which such planning can be improved to help shape more effective policy measures, incentives, and market-mechanisms that can overcome barriers to high performance, low impact community development.

6.10.1 Tools and Methods

Analytical tools and energy needs assessments can assist city officials and planners in better integrating proven clean technologies into community buildings and infrastructure; anticipating future technologies in the design structures; and managing and minimizing adverse impacts from production, consumption, and waste disposal. Such analyses can clarify market barriers and inform the design of policies, incentives, and market-based mechanisms. Moreover, by helping to gauge the probability and magnitude of risks, as well as evaluate options for managing risks, decision support tools can facilitate the development of innovative financing schemes and business models by the private sector.

The CVRP used state-of-the-art modeling and analytical tools to assess the cost-effectiveness of combining different energy technologies and practices in California's loading order with performance-enhancing community design options to improve energy delivery, energy efficiency, and air quality in the greenfield developments and elsewhere in California. Using these tools and methods, planning officials and developers can compare the energy and environmental impacts and economic costs of alternative development scenarios and various growth patterns against a "business as usual" reference case.

In the CVRP, a "toolkit" of modeling software was used to evaluate different scenarios for optimizing energy performance, environmental quality, and economic value. This toolkit consisted of six building and district energy technology and urban design modeling tools.[19] The

---

19 National Energy Center for Sustainable Communities at San Diego State University, *Energy-Efficient Community Development in California: Chula Vista*, Publication Number CEC-500-2011-019, pg. 5-6, 2011, http://www.energy.ca.gov/publications/displayOneReport.php?pubNum=CEC-500-2011-019 at 6.

"Building Energy Analyzer" and "Energy 10" tools analyzed and determined an optimal mix of energy-efficient building materials and advanced energy technologies for selected residential, commercial, and institutional building types based on criteria of maximum energy savings and reasonable payback on investment. With these tools, building-scale evaluations were performed of the economic costs and emissions-related environmental and energy efficiency impacts of the following technologies: building envelope; operating equipment, appliance, and plug loads; HVAC; lighting; control systems; DG with CCHP; solar PV; solar thermal; and thermal storage. Subsequently, a "community-scale" analysis was performed to evaluate the aggregated economic, energy, and environmental impacts of implementing each of the three building technology packages (EE, EE-PV and EE-DG options).[20] "Termis," a hydraulic modeling tool, was used to evaluate the technical and economic feasibility of incorporating a district cooling system into the mixed-use commercial site.[21]

The tools "City Green," "Mitigation Impact Screening Tool, and "CommunityViz" were used to model the energy and environmental impacts of the various community design options relating to land use, infrastructure, and transportation patterns and configurations. CommunityViz also was used to synthesize data impacts from the other software tools and to produce 360-degree visualizations and real-time impact simulations for stakeholder meetings in which alternative design options were evaluated.[22]

The further development of these types of tools and methodologies is critical for optimizing technical integration solutions within site development. Evolving the capabilities of these tools and methods will provide a clearer understanding of the environmental, economic, and equity impacts of embedded energy costs and operational energy needs of urban infrastructure and urbanization. Based on this understanding, planning officials, utilities, and developers will be able to better characterize and influence demand growth and shape energy supply investment decisions within communities. Moreover, planners, utilities, and developers will be able to take a more systems-oriented and holistic planning and development approach. Towards these ends, the CVRP made a notable contribution by focusing on applying and testing through an open source and peer distributed process, and interoperating software capable of assessing multi-faceted spatial design and technology elements in connection with the sustainable development of the greenfield sites.

6.10.2 Systemic Assessment of Costs and Benefits

The CVRP makes clear the importance of conducting research to evaluate the integration of different technical options, combined with performance-enhancing community design and development patterns, within large-scale development projects. Community-scale research

---

20 "GTI Approach to Analysis of Selected Community Energy Efficiency Options," M. Czachorski (November 2008).

21 PIER Project Report at 21.

22 Ibid, 33-56.

projects, such as the CVRP and RESCO projects, provide opportunities to explore distributed energy combinations and configurations on the building and site levels within the framework of energy distribution and transportation loads. The CVRP applied and tested new tools, methods, and practices to assess ways in which Chula Vista and other communities can capture the benefits of energy efficiency and clean energy supply without incurring undue technology risks and costs. The Chula Vista research project not only assessed the energy efficiency and climate change impacts of community development practices, but also examined the feasibility of achieving greater efficiencies with alternative integrated energy solutions, clean energy supply and end-use technologies, and community design options. With the objective of identifying cost-effective master plan options for high-efficiency, low-impact community development, the project evaluated:[23]

- Energy supply, demand, and control technologies and strategies for residential, commercial, and institutional structures and water and wastewater management.
- Energy strategies to incorporate renewable energy sources and clean energy co-generation and district energy systems into existing energy utility networks.
- Land-use allocations, densities, building orientations, landscaping, and other design elements to maximize passive heating, cooling, and lighting for structures, increase storm-water runoff control, and reduce urban heat island effect.
- Transportation infrastructure strategies and mobility patterns that promote community walkability, reduce petroleum consumption, and reduce the emission of criteria air pollutants and greenhouse gases.

The CVRP introduced into the development planning processes for the two greenfield sites assessments of market feasible combinations of alternative energy technology options with enabling spatial design elements, with the objective of improving cost-effectively the overall energy performance and environmental quality of the developments. Projects such as the CVRP allow planning officials, developers, utilities, and other stakeholders to take a systems approach to increasing substantially the efficiency, dependability, resiliency, and sustainability of their community's energy infrastructure and built-environment. In such projects, the performance capabilities of different combinations of technologies with complementary attributes can be assessed within a full-scale, community-based setting. For example, combining renewable energy heating and cooling with energy efficiency measures, demand response, and building-integrated solar electricity solutions could potentially enable "zero net energy" use in residential and commercial buildings within developments.

---

23 PIER Project Report at 157-176.

The CVRP-modeled simulations suggest that significant benefits can flow from capitalizing on "smart growth" design elements that enable use of DERs, more efficient water use and waste management practices, and more effective multi-modal transport options including:[24]

- Reduced energy consumption and peak load demand
- Deferred transmission and distribution expansions or upgrades
- Increased utilization of existing utility infrastructure
- Reduced electricity costs
- Improved power quality and reliability
- Increased gray water use and recovery
- Reduced environmental impacts, including air and greenhouse gas emissions
- Reduced risks in adopting energy efficient and renewable energy technologies
- Reduced fuel demand and resulting emissions
- Enhanced asset value and land use
- Load following and dispatching capabilities
- Reduced capital and operating costs for RE deployment
- New value-added products and services
- Innovative transport and mobility strategies

6.10.3 Alternative Planning Scenarios

Model-based integrated community design can create cost-effective opportunities for developing energy-efficient and renewable energy-based infrastructure within communities. As the CVRP demonstrated, these techniques can optimize the economic potential for distributed energy resource applications by creating the spatial conditions and load density needed for their economical use. The CVRP showed how "smart growth" development (mixed-use, greater densities, and transit-oriented) can support more efficient community and building-scale technology options than would be possible using conventional development patterns and practices. For example, the CVRP illustrated how smart growth practices can make possible the development of district energy systems that provide heating and cooling services. These systems can contribute to maximizing the efficient use of a variety of fuels to co-generate and deliver electricity and thermal energy locally. Because district energy thermal networks can aggregate and link the heating and cooling requirements of dozens or hundreds of buildings, they create a greater scale of thermal energy use in a community that can facilitate fuel flexible

24 Ibid.

solutions at a central plant or plants and allow for thermal storage applications that would not otherwise be functionally or economically feasible on an individual building basis. District energy systems can make economically and environmentally attractive the use of locally available renewable resources such as municipal solid waste, landfill gas, biomass, geothermal, and solar energy.[25]

The CVRP findings also reveal the potential for integrated land-use planning and design to facilitate the development of energy smart networks within communities, including novel interfacing between power, transport, and communications systems through using enabling smart grid technologies. Using integrated systems modeling, alternative options could be assessed for smart grid ready distribution and interconnections between electric vehicles, buildings, and the electricity grid. Charging plug-in electric vehicles from a home energy storage system could be coupled with renewable energy heating or cooling, combined heat and power ground source heat pumps, and communication and control systems to enable peak shaving or load-following capabilities. Using tools and methods such as those applied in the CVRP, communities can explore the inter-dynamics between urban systems planning and design, DER applications, and smart energy network development.

6.10.4 Performance Measures, Metrics and Model Site Design Standards

"True cost pricing" for energy-efficient and renewable energy-based community development will not be possible without the development of standardized methodologies for calculating the operational and embedded cost savings resulting from sustainability approaches and for monetizing the public and market benefits of integrated community and building energy systems solutions combined with smart growth design. Standardized measurement methodologies are necessary to assure real, verifiable, and permanent GHG emissions reductions and energy savings. Specific performance measures, methodologies, and reporting systems are also needed to manage resources as programs are developed and to measure the effectiveness of the programs in moving a community towards its sustainability goals and objectives.

The CVRP contributed to the development of performance measurements by explaining and quantifying the effect land use has on energy and environmental systems, including impacts on energy consumption, grid utilization, peak demand, and greenhouse gas emissions. It is important that modeling and decision support tools continue to be developed to improve the integration of energy considerations into future planning and development efforts.

Under Chula Vista's Building Carbon Reduction Benchmarking program, carbon savings can be achieved through either energy efficiency efforts or community/site design. While there are established measurement protocols for quantifying energy savings and converting those savings into carbon-equivalent emissions reductions, there are no accepted protocols for

---

25 National Energy Center for Sustainable Development and the International District Energy Association, *Community – District Energy Systems: Preliminary Planning & Design Standards*, pg. 1, 2007.

establishing baselines and quantifying energy savings and GHG emissions reductions resulting from integrated community design measures. Based on the findings of the CVRP and other inputs, the City of Chula Vista will be supporting efforts to develop carbon benchmarks for community/site design features and then to convert the benchmarks into standards and measures for energy-efficient and low carbon community development. As part of this undertaking, practical evaluation methods and tools will be compiled for public and private planning practitioners.

The Energy Commission funded the development of GHG protocols for energy efficiency and associated GHG emissions quantification and reporting with respect to buildings, land use development activities, and the construction and operation of infrastructure.[26] These protocols take into account the indirect effects that the location, design, and operation of the surrounding built environment have on GHG emissions and energy use. The protocols aim to promote energy-efficient and GHG-reducing design, construction, and operation of built environments. If these protocols are adopted by CARB, they could play a key role in ensuring that energy strategies that are adopted at the local level can be appropriately quantified and credited toward California's efforts to reduce GHG emissions.

Finally, standardized performance measurement and verification will be necessary for quantifying and valuing multiple resource benefits arising from integrated design solutions and integrated DSM programs that cross resources, including energy, transport, water, waste, and air quality. With respect to overall sustainable community resources management, the CVRP highlighted the need to quantify and value the embedded energy costs and operational energy needs of urban infrastructure and urbanization as essential for crafting market-changing policies and business and financial models.

---

26 CTG Energetics, "Scope of Work" in response to the Energy Commission Solicitation, "Technology Innovation in Buildings and Communities II," RFP No. 500-08-503, 2009.

GLOSSARY

AMI	Advanced Metering Infrastructure
CAC	Community Advisory Committee
California ISO	California Independent System Operator
CARB	California Air Resources Board
CCHP	Combined Cooling, Heat & Power
CPR	Critical Project Review
CPV	Concentrating Photovoltaics
CPUC	California Public Utilities Commission
CREBS	Clean Renewable Energy Bonds
CSI	California Solar Initiative
CTSD	CleanTECH San Diego's
CVRP	Chula Vista Research Project
DER	Distributed Energy Resources
DNI	Direct normal irradiation
DOE	United States Department of Energy
ECUP	East Campus Utility Plant
EE	Energy Efficiency
EECBG	Energy Efficiency and Conservation Block Grants
EECD	Energy Efficient Community Development
EPA	Environmental Protection Agency
ESB	Enterprise Service Bus
ESTCP	Environmental Security Technology Certification Program
EV	Electric Vehicle
FERC	Federal Energy Regulatory Commission
IEC	International Electrotechnical Commission
ISO	Independent System Operators
kW, kWh	Kilowatt, kilowatt-hour
LAN	Local Area Network
MW, MWh, MWp	Megawatt, megawatt-hour, peak megawatts
NIST	National Institute of Standards & Technology
PIER	Public Interest Energy Research
PMU	Phasor Measurement Unit
PPA	Power Purchase Agreement
PUC	Public Utility Commission
PV	Photovoltaics
RD&D	Research, development, and demonstration
RE	Renewable energy
RESCO	Renewable Energy Secure Community
RTO	Regional Transmission Operators
SANDAG	San Diego Area Governments
SDG&E	San Diego Gas & Electric
SDSURF	San Diego State University Research Foundation
SGIP	Self-Generation Incentive Program

SLICE	State Leadership In Clean Energy (SLICE)
SLWG	Street Light Working Group
SONGS	San Onofre Nuclear Generating Stations
TEES	Thermal and electricity energy storage
TSI	Total Sky Imager
UCSD	University of California, San Diego

REFERENCES

D. Newman, Gas Technology Institute at 4-5, GTI Model Design at 15-16, Planning & Design Guidelines for Energy-Efficient Community Development, 2004.

CTG Energetics, "Scope of Work" in response to the Energy Commission Solicitation, "Technology Innovation in Buildings and Communities II," RFP No. 500-08-503, 2009.

M. Czachorski ,"GTI Approach to Analysis of Selected Community Energy Efficiency Options," (November 2008).

National Energy Center for Sustainable Communities at San Diego State University, Energy-Efficient Community Development in California: Chula Vista, Publication Number CEC-500-2011-019, pg. 5-6, 2011, http://www.energy.ca.gov/publications/displayOneReport.php?pubNum=CEC-500-2011-019.

Viridity Energy, Inc., Energy and Environmental Economics, Inc., Integration of high penetration renewables using distributed energy resources: A case study based on the University of California, San Diego, Final Report, 2013, https://ethree.com/documents/CSIRDD_Viridity_Task_6-8_Report.pdf http://calsolarresearch.ca.gov/component/option,com_sobipro/Itemid,0/pid,54/sid,73/

APPENDIX A: Functional Specification For the Integration of VPower™ to Power Analytics' Products

Prepared By:

Viridity Energy, Inc. in collaboration with Power Analytics staff

Aug 3, 2010

Version	Date	Author	Change Description
1.0	5/17/10	R Schaal	Original Draft
1.1	7/19/10	S Hoffman	Add in functional specifications from Xingwang Ma & Sean Walsh
1.2	7/29/10	Xingwang Ma	Updated to reflect agreements out of the weekly conference calls (7/22 and 7/29)
1.3	8/3/10	B Radibratovic Kevin Meagher Rodger Koopman	Additions and edits that reflect internal EDSA discussions.
1.4	8/3/10	R. Schaal	Final edits after ESDA/Viridity collaborative discussions

General Functional Specification

This document is established to clarify and bind the requirements of the RESCO Grant project as it relates to the work Viridity will perform in order to integrate Viridity Energy Inc.'s ("Viridity") VPower™ to EDSA's Paladin product.

General Requirements

Overview

The objective of this project is to evaluate and determine the requirements to integrate EDSA's Paladin product with VPower™ which will enable a community like UCSD to assess the costs/benefits of the planned addition of new distributed resources and to assess their respective advantages in the context of a Central Market. Most importantly, this would allow the UCSD operator to develop the price sensitive, day ahead virtual generation and load schedules, and to submit those to the market operators.

For Phase 1, this is not a live or operational function for Market participation, and we will only have simulated price signals from CAISO Day Ahead for a previous or similar day that will be supplied by Viridity. This phase is a demonstration that will provide Weather Forecast, Price Forecast, Load Forecast, Generation Forecast, Carbon Calculator and Unit Commitment for a combination of twenty (20) generators, storage and loads from anywhere on the UCSD campus.

Viridity's General Obligations

Viridity's obligations shall include, but not be limited to the responsibilities in the following list and those necessary to meet the requirements described in this Specification:

- System engineering
- Analysis and programming
- VPower™ application and related 3rd party software licenses
- Provide EDSA/UCSD hardware and operating system specification requirements
- Shipment of all Viridity supplied software to designated **UCSD** destinations
- Integration of all Viridity software on hardware provided by UCSD
- Factory and field testing
- VPower™ application Training and Support
- Project Management

EDSA's General Obligations

EDSA will supply the following services as part of this implementation:

- Engineering and Technical Support when required

- User Interface design development
- Technical review of Viridity's designs and test procedures as required
- Participation field tests where appropriate
- Coordination of Viridity's activities with EDSA's operating requirements
- Installation assistance at UCSD's designated location

Project Implementation Schedule

Viridity shall provide a preliminary version of the project schedule, including documentation submittal dates, showing key deliverables, dependencies, and milestones.

Specific System Requirements

Overview

This section specifies requirements, which concern the system as a whole. The details of the system's functions, user interface, and the system's supporting hardware and software, are specified in subsequent sections.

Specific Obligations

Phase 1: Optimizer Integration

Viridity's key role is to integrate the VPower™ application in the UCSD's Master Controller provided by EDSA and their Paladin product. This integration will involve the following steps.

- Joint development with EDSA on the functional design of the interface between the Master Controller and VPower™ which includes an overall system diagram, high level function definitions, major data interfaces and methods of communications.
- Joint development with EDSA on the Application Programming Interfaces (APIs)
- Assist EDSA in the development and validation of the bi-directional communications between the Master Controller and VPower™
- Provide operational support for a period of 18 months
- Support UCSD staff in configuring the campus model into VPower™ , analyzing the data, performance, and validation of the results

Modeling Requirements

Resources

The following list of 20 resources will be modeled for the purpose of this demonstration.

ID	Resource Description	Information Needed	Resource modeled in VPower
1	Two - 13.5 MW Gas Turbines	Incremental energy cost ($/MWh), Up ramp rate limit (MW/hr), Down ramp rate limit (MW/hr), Minimum run time (hr), Minimum down time (hr), Time needed to start (hr), Cost per startup ($), Operation & maintenance cost ($/hr), Fuel consumption rate (Gal/MWh), Emission Rate (lb/Gal of fuel)	Generator
2	One - 3 MW Steam Turbines	Incremental energy cost ($/MWh), Up ramp rate limit (MW/hr), Down ramp rate limit (MW/hr), Minimum run time (hr), Minimum down time (hr), Time needed to start (hr), Cost per startup ($), Operation & maintenance cost ($/hr), Fuel consumption rate (Gal/MWh), Emission Rate (lb/Gal of fuel)	Generator
3	Thermal Storage	Ice storage loss rate (%/hr), Ice charge efficiency (coefficient denoting the efficiency of electrical energy conversion into ice - value ranging from 0 to 1), Ice charge rate (MWh/hr), Ice discharge rate (MWh/hr), Ice storage maximum capacity of the ice maker (MWh)	Ice-storage
4	7 Site, 1.2 MW PV as unitary source	Maximum generation capacity (MW), Incremental energy cost ($/MWh)	Solar Panel
5	Thermal Power Chiller – 3 Steams		
6	Electric Power Chiller – 6 Electric		
7	Keep JC as		

	unitary		
8	3x 1.5 Mw, 2x1 MW = 4.5 MW dispatchable a diesel gensets	Incremental energy cost ($/MWh), Up ramp rate limit (MW/hr), Down ramp rate limit (MW/hr), Minimum run time (hr), Minimum down time (hr), Time needed to start (hr), Cost per startup ($), Operation & maintenance cost ($/hr), Fuel consumption rate (Gal/MWh), Emission Rate (lb/Gal for fuel)	Generator
9	Treat #8 above as two resources		
10	SDSC Chiller		
11	High Temp Water Strategy – Comfort Index		
12	Fast EV Charger for Bus		
13	Slow EV Charger for Bus	Minimum storage capacity (MWh), Maximum storage capacity (MWh), Loss rate (%/hr), Efficiency factor (value range 0 - 1), Minimum charge rate (MWh/hr), Maximum charge rate (MWh/hr), Minimum discharge rate (MWh/hr), Maximum discharge rate (MWh/hr)	Battery
14	Slow EV Charger for Nissan Leaf	Minimum storage capacity (MWh), Maximum storage capacity (MWh), Loss rate (%/hr), Efficiency factor (value range 0 - 1), Minimum charge rate (MWh/hr), Maximum charge rate (MWh/hr), Minimum discharge rate (MWh/hr), Maximum discharge rate (MWh/hr)	Battery
15	New 1 MW PV	Maximum generation capacity (MW), Incremental energy cost ($/MWh)	Solar Panel
16	New 2.8 Fuel Cell	Incremental energy cost ($/MWh), Up ramp rate limit (MW/hr), Down ramp rate limit (MW/hr), Minimum run time (hr), Minimum down time (hr), Time needed to start (hr), Cost per startup ($), Operation & maintenance cost ($/hr), Fuel consumption rate (Gal/MWh), Emission Rate (lb/Gal for fuel)	Generator

17	New 7.6 MWh Energy Storage	Minimum storage capacity (MWh), Maximum storage capacity (MWh), Loss rate (%/hr), Efficiency factor (value range 0 - 1), Minimum charge rate (MWh/hr), Maximum charge rate (MWh/hr), Minimum discharge rate (MWh/hr), Maximum discharge rate (MWh/hr)	Battery
18	New PV Integrated Storage	See data requirements for battery and solar panel above	Solar Panel & Battery
19	Fast EV charger for Nissan Leaf EV	Minimum storage capacity (MWh), Maximum storage capacity (MWh), Loss rate (%/hr), Efficiency factor (value range 0 - 1), Minimum charge rate (MWh/hr), Maximum charge rate (MWh/hr), Minimum discharge rate (MWh/hr), Maximum discharge rate (MWh/hr)	Battery
20	An off-campus (not connected to microgrid) load, storage or generation source in order to demonstrate the Virtual Power Plant concept.		

Architecture Requirements

UCSD will provide adequate virtualized environments that will allow Viridity software to coexist with other applications such as EDSA's Paladin product.

Application Programming Interface

Naming Convention

Data Translation Tables

It is assumed this represents the mapping of point/channel ID numbers unique in the EDSA Paladin Live system to their equivalent counterparts on the VPower side. If correct, this translation table will be a simple list in YAML per the Web Services discussion below.

Communication Protocol

Security

To ensure only authorized operators have access to the system, it's important that cyber security issues are part of the design of the system. Although the application is not a sexy per se from an outside intruder's perspective, it nevertheless is possible that unauthorized and intentional disruption of the system can have a significantly adverse economic and other impacts.

Therefore, the initial delivery of the system in the Fall of 2010 communications between systems via Web Services or any other communications link will only occur via secure VPN "tunnels" or secure https.

Follow on deliverables at later dates need to include more robust security features, such as authenticated sessions across encrypted communications links. There are a host of generally acceptable, "best of breed" approaches that require further exploration before being included in this specification. We do, however, need to formally commit that robust security will be a part of this system design.

Web Services

Timing

Web Services, while ubiquitous and convenient, do not perform at speeds comparable to true "real-time" systems. Therefore, it's important to note that all communications proposed as part of this system design will at best perform at something like a 15 minute, "near real-time" resolution. Depending on bandwidth, availability, architecture, and a host of other variables, it's likely that the interaction between Paladin Live and VPower will be much faster. However, to set the correct expectation so as to exceed it, 15 minutes is assumed to be an acceptable average timing window.

VPower

1. VPower "Get Resources" web service to enable Paladin Live to GET a list of devices and channels. This returns a list of resources and their attributes.
    - Allows EDSA to create a drag & drop mapping GUI that will generate the YAML file so VPower can talk in EDSA vernacular to Paladin Live.
2. VPower "Status Update" web service to enable Paladin Live to notify VPower something significant has changed that affects the reliability and effectiveness of the schedule currently in effect.
    - In other words, "a potentially catastrophic anomaly" occurred--perhaps a major generation resource failed--that Paladin Live became aware of and VPower needs to be notified so that it can decide to respond. Possibly remediation strategies need to be calculated and submitted for action, or at the least operators need to be notified that a disruption is in progress and manual intervention is required.
        - An ambitious future capability might include automatic forwarding of information to work order systems (using Web Services and other APIs) in case capital equipment is involved that should be scheduled for repair.

- We need to determine if a separate schema is required to implement this, or whether existing schemas can do "double duty."

Paladin Live

1. EDSA "Get Status" web service to enable VPower to get near real-time status updates.
2. EDSA "Send Command" web service that enables VPower to send commands to Paladin Live.
   - Commands will be ACK'd by Paladin Live per the work flow below.

Work Flow

- **Run Optimization**: User clicks on a button called "Run Optimization":
  - Proposed handshaking mechanism between Paladin and VPower optimizer, upon clicking the button. See the Scheme definition below.
    1) **Paladin Live sends data to VPower**: Paladin calls Webservice APIs to transfer the pre-defined data to VPower, which is then used to feed optimizer using a pre-defined format
       - Available units: VPower optimizer will schedule the commitment of units for next day. Current status of units and historical operational data (e.g., current gen MW, online/offline times, startup times) will also be needed from Paladin via PI.
       - Static (fixed) loads profile from the previous 24 hours averaged with half-hour resolution. For instance if the request for optimization is issued at noon on Wednesday, user is really concerned what should be done on Thursday; but we will use static loads between noon Tuesday and noon Wednesday. VPower optimizer will need fixed loads for each half-hour of the next scheduling day that do not include the cooling loads that are to be scheduled in the optimization.

         Although it is not required in VPower optimization, the network active power losses should be included in the static fixed loads for each half-hour interval.
    2) **VPower Optimizes the schedule**: VPower optimizer executes to solve and the solution is moved first to VPower, which is then transferred to Paladin using the pre-defined Webservice XML based APIs.
    3) **VPower sends Paladin Live a proposed schedule**.
       - Data: Begin & end times, unique Paladin Live IDs ("UID"), and proposed 32-bit floating point values (i.e., set points).
       - Generator schedule for 48 points (1/2 hour resolution)
       - Load schedule for cooling (optimization) loads for 48 points.
       - There are several quantities that VPower will be using in the optimization that are fundamental for understanding the results and they should be stored through EDSA interface on PI server. One example is LMP.

- Viridity to provide the list of points that VPower will send to Paladin that will be saved on the server.

4) **Paladin Live reads the VPower solution and performs analysis**

- Paladin Live performs 48 power flows, assessing Q limits of generators, current limits of all branches in the system (transformers, feeders, relays) and voltage profile in the system.

5) **Paladin Live responds back to VPower**

- If there are no constraints, Paladin Live sends a simple ACK that proposed schedule is OK.
- If, for any of these power flows, constraint violations are discovered Paladin Live send this information back to VPower:
  i. Point which has the violation (power flow #26 – e.g. 1PM)
  ii. Type of violation: generator Q limit, branch overload or voltage violation.
  iii. If the generator has hit Q-limit, the generator's P-limit adjusted by Paladin is sent back to VPower optimizer.
  iv. If a branch is overloaded, Paladin Live will provide sensitivities of branch load with respect to active power generation of all optimization resources.

  i. In addition, Paladin will provide the constraint flow limit in MW that accounts for the effect of reactive flow on the violating branch. The effect of bus voltages on constraint control may be reflected either in the sensitivities and/or the constraint flow limit.
  v. If a bus has voltage violation, Paladin Live will provide sensitivities of bus voltage with respect to active power generation of all optimization resources.

  Explicit modeling of network losses will be excluded from data exchanges between Paladin and VPower.
- The above steps will be performed iteratively until convergence.
  1. VPower performs additional optimization and refines the solution.
     - VPower re-optimize all (48) scheduling time intervals in each iteration.
  2. Paladin Live performs power flow again and we repeat these steps until we reach the feasible solution. The following approach to terminating the iterative process will be used:
     - Paladin decides the termination of the iterative solution process. This will be the preferred approach if Paladin is used as the Master controller for the iterative process.
  3. Paladin-VPower iteration convergence criteria
     - No new network security constraint is detected in Paladin power flow solutions

- Resource schedules cannot be optimized further (the optimization is terminated successfully)
- The algorithm does not converge in a preset maximum # of iterations (ex. 5).

In case that Paladin-VPower iteration terminates due to the preset maximum # of iterations or with network constraint limit violations, Paladin Live could perform constrained power flow and set all the generators to the limits. In order to maintain consistent status for the Paladin-VPower iterative process, it is recommended that use of Paladin's constrained power flow capability be manual activation or its activation as the last resort of the Paladin-VPower iterative process be user-configurable.

4. Exception handling
   - The VPower Optimizer reports the execution status as a normal logging process. Optionally, this information can be made available to Paladin Live in a standard form, TDB, so that it may be displayed on an appropriate user display. Conversely, execution status can be viewed by accessing VPower log files.

User Interface

The user interface currently used in Paladin Live Demo product will be replicated for UCSD. The interface consists of a campus map that includes most important optimization resources. After starting the optimization process, user will be able to see animation showing the state of the system every half hour; in particular power consumed or produced by main resources will be shown, major cumulative numbers will be shown too (price, saving, etc.). In addition, the User can also access the standard VPower displays in order to view optimization details.

User interface includes the following functions:

General Features

The general features will be provided as follows:

User Interface Tools

Standard Functionality and Testing

Viridity shall test all software before delivery and installation at the UCSD campus through the normal testing processes as defined by Viridity's internal systems.

System Installation

The System shall be delivered after the standard testing has been completed.

Training and Support

General Requirements

General requirements relating any training are specified below.

Training will be conducted by personnel who are experienced and articulate in the given subject matter. Training materials shall be provided by Viridity as appropriate.

Training Plan and Schedule

A Training plan and schedule will be jointly developed with EDSA according to the needs of UCSD.

APPENDIX B:
EnerNex Final Project Report

Jerry Brown
Governor

ENABLING RENEWABLE ENERGY, ENERGY STORAGE, DEMAND RESPONSE and ENERGY EFFICIENCY with a COMMUNITY BASED MASTER CONTROLLER-OPTIMIZER FINAL REPORT

PIER FINAL PROJECT REPORT

Prepared For:
California Energy Commission
Public Interest Energy Research Program

Prepared By:
EnerNex Corporation

December 2011
PIR-08-043

Prepared By:
EnerNex Corporation
Project Manager: Kay Stefferud
620 Mabry Hood Road
Suite 300
Knoxville, TN 37932
Commission Sub Contract
University of California, San Diego PIR-08-043

Prepared For:
Public Interest Energy Research (PIER) Program
California Energy Commission

Gerry Braun
Contract Manager

David Michel
Program Area Lead
Renewables Integration

Michael Gravely
Office Manager
Energy Systems Research Office

Martha Krebs
PIER Director
ENERGY RESEARCH & DEVELOPMENT DIVISION

Melissa Jones
Executive Director

DISCLAIMER

This report was prepared as the result of work sponsored by the California Energy Commission. It does not necessarily represent the views of the Energy Commission, its employees or the State of California. The Energy Commission, the State of California, its employees, contractors and subcontractors make no warrant, express or implied, and assume no legal liability for the information in this report; nor does any party represent that the uses of this information will not infringe upon privately owned rights. This report has not been approved or disapproved by the California Energy Commission nor has the California Energy Commission passed upon the accuracy or adequacy of the information in this report.

Acknowledgements

EnerNex Corporation would like to thank UCSD and CEC project managers and advisors, and the CEC Technical Advisory Committee (TAC) for their valuable contributions to addressing this challenging study, for hosting meetings and providing assistance, technical advice, and reviews.

Document History

Revision History

Revision Number	Revision Date	Revision / Reviewed By	Summary of Changes	Changes marked
0.1	1/24/11	Jerry Melcher	Template, outline and initial content	N
1.0	1/28/11	Jerry Melcher, Kay Stefferud	Draft version 1.0	N
1.1	3/18/2011	Kay Stefferud	Final Draft version with updated material added to SOW tasks 3.3., 3.4, and 3.7.	N
1.2	12/23/2011	Kay Stefferud, Jens Schoene	Final version with material for all SOW tasks	N

Approvals

This document requires the following approvals.

Name	Title
Kay Stefferud	*EnerNex Director of Consulting Services*
Byron Washom	*UCSD Director of Energy Strategies*

Preface

The California Energy Commission's Public Interest Energy Research (PIER) Program supports public interest energy research and development that will help improve the quality of life in California by bringing environmentally safe, affordable, and reliable energy services and products to the marketplace.

The PIER Program conducts public interest research, development, and demonstration (RD&D) projects to benefit California. The PIER Program strives to conduct the most promising public interest energy research by partnering with RD&D entities, including individuals, businesses, utilities, and public or private research institutions. PIER funding efforts are focused on the following RD&D program areas:

- Buildings End-Use Energy Efficiency
- Energy Innovations Small Grants
- Energy-Related Environmental Research
- Energy Systems Integration
- Environmentally Preferred Advanced Generation
- Industrial/Agricultural/Water End-Use Energy Efficiency
- Renewable Energy Technologies
- Transportation

Enabling Renewable Energy, Energy Storage, Demand Response and Energy Efficiency with a Community Based Master Controller-Optimizer Report, Section 3 is part of the final report under UCSD subcontract to CEC, Contract Number PIR-08-043, conducted by EnerNex. The information from this project contributes to PIER's Renewables Integration Program.

For more information about the PIER Program, please visit the Energy Commission's Website at www.energy.ca.gov/research/ or contact the Energy Commission at 916-654-4878.

Table of Contents

1.0 PROJECT OVERVIEW 13

1.1.1. Administration Task Summary 14

1.1.2. Interoperability Task Summary 14

1.1.3. Technology Transfer Task Summary 17

2.0 INTEROPERABILITY 17

2.1. Conduct a requirements analysis of overall system 18

2.1.1. Develop protocol standards for smart end use devices 21

2.1.2. Summary of Selected Applicable Standards 23

2.1.3. Identify all system actors and information exchanges 36

2.1.4. Identify key points of interoperability 37

2.1.5. Identify functional and technical and performance requirements including reliability and security 39

2.1.5.1. Functional Requirements 39

2.1.5.2. Security Requirements 41

2.1.5.3. Privacy Requirements 42

2.1.5.4. Timing Requirements 42

2.1.5.5. Reliability Requirements 43

2.2. Evaluate and Map Interoperability Requirements 43

2.2.1. Map requirements to technology independent information and transaction models 44

2.2.2. Reference existing information models 46

2.3. Evaluate and Adopt an Information and Transaction Model Framework 47

2.3.1. Document the methodology that is used for the collection of technology independent information and transaction models 47

2.3.2. The Intelligrid Methodology 49

2.3.3. Plan Projects 50

2.4. Map the Information and Transaction Models 53

2.4.1. Specify implementation technologies for present day requirements 53

2.4.2. Documents the overall system architecture and specific system design 53

2.5. Develop Field Testing and Acceptance Methodology 55
2.6. Recommend Market Significant Smart Appliances 58
2.6.1. Recommend wider demonstration opportunities for UCSD 61
2.7. Validate Concepts and Preliminary Decisions 61
2.7.1. Collaborate with researchers 61
2.7.2. Develop schedule for refreshing models 61
2.7.3. Maintain Predictive Analytics, Software, Hardware and Data 62
2.7.4. Provide document of overall system architecture and project specific system design 62
2.7.5. Provide final report with field testing and acceptance methodology that verifies system requirements 62
2.7.6. Validation of Steady-State Analysis 62
2.7.6.1. Significance of a Steady-State Analysis 63
2.7.6.2. PV Model 63
2.7.6.3. Test Feeder Description 63
2.7.6.4. Test Feeder Verification 70
2.7.6.5. Load Flow Analysis 72
2.7.6.6. Presentation of Load Flow Results 73
2.7.6.7. 30% PV penetration – PV at the end of the feeder 77
2.7.6.8. Comparison of Load Flow Results 80
2.7.6.9. Short-Circuit Analysis 85
2.7.6.10. Conclusion of Steady-State Analysis 90
2.7.7. Validation of Transient Analysis 90
2.7.7.1. Significance of a Transient Analysis 90
2.7.7.2. PV Model Description 91
2.7.7.3. Power Analytics PV Model 91
2.7.7.4. EnerNex PV Model 97
2.7.7.5. PV Model 97
2.7.7.6. DC-DC booster 100
2.7.7.7. DC-AC inverter 103
2.7.7.8. Test System 108
2.7.7.9. Bus Data 109
2.7.7.10. Branch Data 110
2.7.7.11. Transformer & Line Voltage Regulator Data 110

2.7.7.12. PV Model Response to a Fault 111
2.7.7.13. PV Model Response to Changing Insolation 115
2.7.7.14. Additional testing of EnerNex model in PSCAD 119
2.7.7.15. Normal condition 119
2.7.7.16. System contingency 121
2.7.7.17. Power quality issues 123
2.7.7.18. Conclusion of Transient Analysis 124
3.0 PRODUCTION READINESS PLAN 125
3.1. Production Product Requirements 125
3.2. Production Product Standardization 127

Table of Figures and Tables

Figure 1 UCSD Microgrid High Level System Component Design 13

Figure 2 UCSD Microgrid System Diagram 19

Figure 3 Smart Grid Standard Protocols Applicable to the UCSD Microgrid System 22

Table 1: List of Applicable Smart Grid Standards..... 23

Figure 4 – Relationships between Some DER Communications Standards 24

Figure 5 – Scope of IEC 61850-7-420 27

Figure 6 UCSD Microgrid Actors..... 36

Table 2: Microgrid Actors 37

Table 3: List of Key Microgrid Points of Interoperability..... 39

Figure 7 UCSD Microgrid Use Cases..... 44

Table 4 Transaction and Information Model Mapping 45

Figure 8 GWAC Stack Information Model 46

Figure 9 Recommended Communications Protocols 46

Figure 10 : Smart Grid Framework 48

Figure 11 - Requirements and Systems Architecture Process..... 49

Figure 12 Technology Selection, Business Case and Deployment Process 50

Figure 13 Project Streams..... 52

Figure 14 Overview of Technology Selection Process 53

Figure 15 Microgrid Controller Architecture 54

Figure 16 Microgrid Controller System Design 55

Table 5: Microgrid Requirements Mapped to Field Test Procedures 57

Table 6: UCSD Microgrid System Test Objectives and Requirements 58

Figure 17 Production Smart Appliances 59

Figure 18 Multiple Microgrid Controller to Smart Appliance Application and Media/Network Protocol Options Exist 60

Figure 19: Original IEEE 34 Node Test Feeder model 64

Figure 20: Schematic of test feeder model, Power Analytics DesignBase. 66

Figure 21: Schematic of test feeder model, EMTP-RV. 67

Table 7: Line data of test feeder. 69

Table 8: Load data of test feeder. 70

Table 9: 34 Transformer data of test feeder. 70

Table 10: Load flow results from EnerNex DesignBase simulations for some selected nodes in the network without considering PV and extra loads 70

Table 11: Comparison of load flow results between EnerNex DesignBase simulations and EnerNex EMTP-RV simulations 72

Table 12: Comparison of generation and consumption results between EnerNex DesignBase simulations and EnerNex EMTP-RV simulations 72

Table 13: Active and reactive powers supplied by the grid and PV, consumed by the load, and lost in the system at six different daytime hours. 30% PV penetration near substation. Results from the Power Analytics report, DesignBase simulations conducted by EnerNex, and EMTP-RV simulations conducted by EnerNex. 74

Figure 22: Active Power supplied by the grid, consumed by the loads in the system, and supplied by the PV generators. 30% PV penetration near substation. Results from EMTP-RV simulation. 75

Figure 23: Reactive Power supplied by the grid and consumed by the loads in the system. 30% PV penetration near substation. Results from EMTP-RV simulation. 75

Figure 24: Active and reactive losses in the system. 30% PV penetration near substation. Results from EMTP-RV simulation. 75

Table 14: Voltage magnitudes at six different locations in the system and at six different daytime hours. 30% PV penetration near substation. Results from DesignBase and EMTP-RV simulations. 76

Figure 25: EMTP-RV voltages at six buses in the system. 30% PV penetration near substation.. 77

Table 15: Active and reactive powers supplied by the grid and PV, consumed by the load, and lost in the system at six different daytime hours. 30% PV penetration at feeder end. Results from the Power Analytics report, and DesignBase and EMTP-RV simulations conducted by EnerNex. 77

Figure 26: Active Power supplied by the grid, consumed by the loads in the system, and supplied by the PV generators. 30% PV penetration at feeder end. Results from EMTP-RV simulation. 78

Figure 27: Reactive Power supplied by the grid and consumed by the loads in the system. 30% PV penetration at feeder end. Results from EMTP-RV simulation. 78

Figure 28: Active and reactive losses in the system. 30% PV penetration at feeder end. Results from EMTP-RV simulation. 78

Table 16: Voltage magnitudes at six different locations in the system and at six different daytime hours. 30% PV penetration at feeder end. Results from DesignBase and EMTP-RV simulations. 79

Figure 29: Voltage at six buses in the system. 30% PV penetration at feeder end. Results from EMTP-RV simulation. 80

Table 17: Comparison of active/reactive power results for all PV penetration scenarios at 12pm. 81

Figure 30: Comparison of active power results for all PV penetration scenarios at 12 p.m. 81

Figure 31: Comparison of reactive power results for all PV penetration scenarios at 12 p.m. 82

Table 18: Percentage difference of active/reactive powers relative to EMTP-RV results. 82

Figure 32: Illustration of percentage difference of active powers relative to EMTP-RV results. . 83

Figure 33: Illustration of percentage difference of reactive powers relative to EMTP-RV results. 83

Table 19: Comparison of voltage magnitude results at bus 830 from Power Analytics Report, EnerNex DesignBase simulations, and EnerNex EMTP-RV simulations for all scenarios at 12 p.m. 84

Figure 34: Comparison of voltage magnitude results at bus 830 from Power Analytics Report, EnerNex DesignBase simulations, and EnerNex EMTP-RV simulations for all scenarios at 12 p.m. 84

Table 20: Percentage difference of voltage magnitudes relative to EMTP-RV results. 85

Figure 35: Illustration of percentage difference of voltage magnitudes relative to EMTP-RV results. 85

Table 21: Three-phase symmetrical and asymmetrical short circuit currents. 87

Figure 36: Comparison of symmetrical three-phase short circuit currents from Power Analytics Report, EnerNex DesignBase simulations and EnerNex EMTP-RV simulations. 88

Figure 37: Comparison of asymmetrical three-phase short circuit currents from Power Analytics Report, EnerNex DesignBase simulations and EnerNex EMTP-RV simulations. 88

Figure 38: Percentage differences of symmetrical three-phase short circuit currents relative to EMTP-RV results. 89

Figure 39: Percentage differences of asymmetrical three-phase short circuit currents relative to EMTP-RV results. 89

Figure 40: The schematic of Application programming interface. 91

Figure 41: General PV/Inverter model 92
Figure 42: Power control of the Interface inverter 93
Figure 43: PV array part in Power Analytics PV model 94
Figure 44: Voltage and Frequency protection part in Power Analytics PV model 95
Figure 45 - DC voltage PI regulator part in Power Analytics PV model 96
Figure 46 - Reactive/Voltage/PF PI Regulator part in Power Analytics PV model 97
Figure 47: Equivalent PV cell circuit. 98
Figure 48: PV module model in PSCAD. 99
Figure 49: IV characteristic of PV cell for 1000W/m² Insolation. 100
Figure 50: PV characteristic of PV cell under 1000W/m² Insolation 100
Figure 51: DC-DC booster in PSCAD. 101
Figure 52: MPPT control method 102
Figure 53: Performance of Hill Climbing MPPT algorithm 103
Figure 54: DC-AC inverter in PSCAD 104
Figure 55: Control strategy of PV inverter 107
Figure 56: PV output power to the grid 107
Figure 57: Power control during fault. 108
Figure 58: Nine-node test system with PV integration 109
Figure 59: Active power output of Power Analytics PV model during fault scenario 113
Figure 60: Active power output of EnerNex PV model during fault scenario 114
Figure 61: DC bank voltage of EnerNex model during fault scenario 114
Figure 62: Reactive power output of Power Analytics PV model during fault scenario. 115
Figure 63: Reactive power output of EnerNex model during fault scenario 115
Figure 64: Mutative insolation applied to PV input 116
Figure 65: Active power output of Power Analytics model during insolation change scenario 117
Figure 66: Reactive power output of Power Analytics model during insolation change scenario 117
Figure 67: Mutative insolation applied to EnerNex PV module. 118
Figure 68: Active power output of EnerNex model during insolation change scenario. 118

Figure 69: Reactive power output of EnerNex model during insolation change scenario 118
Figure 70: Active power during PV connection. 119
Figure 71: Reactive power during PV connection..... 120
Figure 72: PV output active power and reactive power..... 120
Figure 73: PV inverter controller performance..... 121
Figure 74: PCC voltage rms 122
Figure 75: PV output active power and reactive power..... 122
Figure 76: PV Inverter controller performance 123
Figure 77: Input radiation of PV cell..... 124
Figure 78: PCC voltage rms in p.u. 124
Table 22 Requirement to Product Mapping..... 127

1.0 Project Overview

The Enabling Renewable Energy, Energy Storage, Demand Response and Energy Efficiency with a Community Based Master Controller-Optimizer Project developed an advanced microgrid controller for the California Energy Commission's (CEC) Renewable Energy Security Communities (RESCO) program. Project goals were to advance understanding of the complex dynamics that drive community-scale, end-use energy demand, and associated air emissions; to apply knowledge gained to generate planning methods and community design models and municipal processes to enable practitioners to build energy-efficient, low-carbon power projects; and to resolve market barriers and risks impeding integration of energy-efficient technologies into development projects through industry collaboration.

For the community-based master controller-optimizer project, UCSD and EnerNex performed requirements analysis, mapped interoperability requirements, adopted a transaction model framework, mapped the information and transaction models, developed a field testing and acceptance methodology, recommended smart appliances, validated concepts and preliminary decisions, helped integrate the master controller, and prepared material for the Production Readiness Plan. Figure 1 shows high level components of the UCSD microgrid system design.

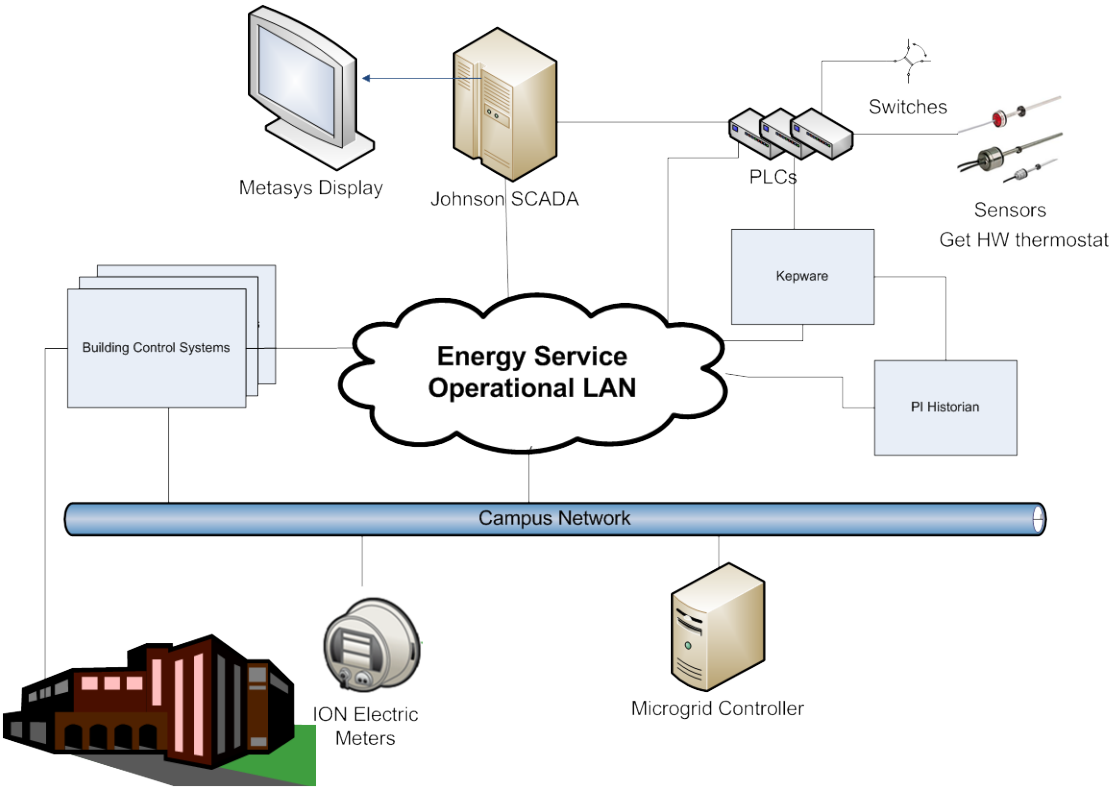

Figure 1 UCSD Microgrid High Level System Component Design

1.1. Research and Task Summary

The UCSD project team which included EnerNex, Viridity and Power Analytics performed research under seven tasks with applicable subtasks. The results of the project research are summarized below on a task by task basis.

1.1.1. Administration Task Summary

Critical Project Review (CPR) Meetings (Task 1.2)

The CPR Meetings task determines if a project should continue to receive Energy Commission funding to complete the formal Agreement and identifies any needed modifications to the tasks, products, schedule or budget. CPRs provide the opportunity for frank discussions between the CEC and the Recipient. EnerNex did not participate in any scheduled CPRs meetings.

Final Meeting (Task 1.3)

The goal of the Final Meeting task is to close out the formal CEC Agreement. EnerNex has not been requested to support the Final Meeting. Anticipated completion of the Final Meeting task is January 31, 2011.

Conduct PAC Meetings (Task 1.9)

The goal of the PAC Meetings task is for the PAC to provide strategic guidance to the project by participating in regular meetings or teleconferences. EnerNex was not requested to support nor did it participate in scheduled PAC meetings. Anticipated completion of the PAC Meetings task is January 20, 2012.

1.1.2. Interoperability Task Summary

Conduct a Requirements Analysis of the Overall System (Task 3.1)

The goal of the Requirements Analysis task was to provide UCSD, Power Analytics and Viridity with emerging and existing protocol standards and requirements in order to have the widest possible interoperability with two way communication smart end-use devices.

During completion of Requirements Analysis task, EnerNex

- Identified the system actors among which information is exchanged. See Section 2.1.3 for results.

- Identified key points of interoperability from the information exchange paths. See Section 2.1.4 for results.
- Identified functional and non-functional requirements, including security and reliability for interfaces. See Section 2.1.5 for results.
- Adhered to the IntelliGrid methodology as published as IEC Publicly Available Specification IEC 62559 "IntelliGrid Methodology for Developing Requirements for Energy Systems". See Section 2.3.2 for a description of IntelliGrid methodology which was followed during this project.

Evaluate and Map Inter-Operability Requirements (Task 3.2)

The goal of Evaluate and Map Inter-Operability task was to achieve an evaluation and mapping of the inter-operability of the interface requirements between Paladin-Controlled Power™ and smart appliances and devices.

During completion of Evaluate and Map Inter-Operability task, EnerNex

- Evaluated requirements and mapped them to one or more technology independent information and transaction models suitable for use in project implementation. See Section 2.2.1 for results.
- Reviewed existing information models such as those defined in the OpenADR, OpenHAN, AMIEnterprise, OpenSmartGrid, and related groups that are developing and refining such models. See Section 2.2.2 for information models reviewed. See Section 2.1.2 for a summary of applicable standards reviewed for application-specific inter-operability requirements.

Evaluate and Adopt an Information and Transaction Model Framework (Task 3.3)

The Goal of Evaluate and Adopt an Information and Transaction Model framework task was to adopt a final information and transaction framework model for inter-operability between Paladin-Controlled Power™ and smart appliances and devices.

During completion of the Evaluate and adopt an Information and Transaction Model Framework task, EnerNex

- Documented the methodology for the collection of technology independent information and transaction models that form the overall logical architecture of the information management and communications system. See Section 2.3 for information and transaction model results.

Map the Information and Transaction models (Task 3.4)

The goal of Map the information and transaction models task was to specify and document the final transactional models.

During completion of the Map the Information and Transaction Models task, EnerNex

- Specified implementation technologies for present day requirements based upon findings in Task 2 using the framework determined in Task 3.3. See Section 2.4 for detailed results.

Develop a Field Testing and Acceptance Methodology (Task 3.5)

The goal of the Develop a Field Testing and Acceptance Methodology task was to verify through field testing the functionality and to manage technology change.

During completion of the Develop a Field Testing and Acceptance Methodology task, EnerNex

- Developed a field testing and acceptance methodology to verify that system requirements could be met by the system design and can be field upgraded as required to support new functionality and manage technology change. See Section 2.5 for detailed results.

Recommend one or more Market Significant Smart Appliances (Task 3.6)

The goal of Recommend Market Significant Smart Appliances task is to recommend wider demonstration opportunities that avail themselves to a community scale market as large as UCSD.

During completion of the Recommend Market Significant Smart Appliances task, EnerNex

- Identified smart appliances that are compliant with the architecture and standards identified in the previous tasks for field testing on the campus. See Section 2.6 for recommended appliances.

Validate Concepts and Preliminary Decisions at each step (Task 3.7)

The goal of Validate Concepts and Preliminary Decisions task is to ensure that each successive step is completed and validated before proceeding to the next step of research.

During completion of the Validate Concepts and Preliminary Decisions task, EnerNex

- Collaborated with researchers for lab and in the field demonstration work. See Section 2.7.1 for detailed results.

- Developed a field test methodology that can be used for testing and validation of the microgrid design as defined in Task 3.5.2. See Section 2.7 for detailed results.
- Validated the Steady-State Analysis performed by Power Analytics. See Section 2.7.6 for detailed results.
- Validated the Transient Analysis performed by Power Analytics. See Section 2.7.7 for detailed results.

1.1.3. Technology Transfer Task Summary

Integration of DFC3000MA and Master Controller-Optimizer (Task 6.1)

The goal of the Integration of DFC3000MA and Master Controller-Optimizer task is to fully integrate the operational functions of the DFC3000MA to operate in an autonomous fashion with the Master-Controller-Optimizer in modes ranging from islanding to demand response.

For task 6.1, EnerNex defined the system and functional requirements for the Master Controller-Optimizer. See Section 2.1 for detailed results which include both system and functional requirements for the master controller-optimizer.

Prepare a Production Readiness Plan (Task 7.1)

The goal of the Production Readiness Plan is to determine the steps that will lead to the manufacturing of the technologies developed in this project or to the commercialization of the project's results.

For task 7.1, EnerNex defined the system Production Readiness Plan requirements and prepared recommendations for product standardization for the Master Controller-Optimizer. See Section 3.1 for production requirements and Section 3.2 for production recommendations.

2.0 Interoperability

Interoperability between internal and external components of the microgrid master controller-optimizer is required for operation. Defined interfaces with specified data exchange items allow for future system changes as well as use of interchangeable systems. Established techniques including the use of recognized standards, methodology, and modeling have helped develop interoperable communications and power systems for the microgrid master controller-optimizer.

As the NIST Project Management Office (PMO) for Smart Grid Interoperability Standards, UCSD's subcontractor, EnerNex, facilitates the review, upgrade and adoption of Smart Grid standards. Utilizing the EPRI IntelliGrid methodology, the recommended approach is to first identify well defined points of interoperability between the various systems that need to communicate in order to achieve their mission. The interoperability points are then analyzed to capture the requirements for that information exchange, e.g., the data payloads, the size of the payloads, how often the packets are exchanged, the security and reliability requirements, etc. These requirements then allow technology independent information and transaction models to be developed, preferably by adopting them from one or more available standards. Such technology independent information models are inherently more stable than the technology that will implement them e.g. communication links, bit on the wire encoding schemes, etc. Selection of an information model framework that is inherently extensible and self-describing (e.g. SOAP/XML, IEC 61850, IEC CIM, etc.) is a key to ensuring that evolving systems can be field upgraded remotely without incurring major expense. Once the architecture is complete (the selection of the information, transaction models and their support framework), then specific implementation technologies can be applied to carry that traffic. The implementation methodology needs to be such that these lower levels of the interoperability stack (as in the classic OSI 7 layer stack or preferably the more comprehensive GridWise Architecture Council interoperability stack concept) can be interchanged at will without affecting upper layers of the system. The interoperability approach has been demonstrated over the past few years of Advanced Metering Infrastructure (AMI) deployment to work effectively and to accommodate technology changes and unforeseen feature upgrade requests, or "future proofing" as it has come to be known in the Smart Grid industry.

2.1. Conduct a requirements analysis of overall system

The UCSD microgrid system diagram in Figure 2 below shows the different microgrid sub-systems including the Power Analytics Micro Paladin-Controlled Power™ system and Viridity Smart Grid Master Controller-Optimizer.

As Smart Grid technology including microgrids roll out into the market, there will be competing and conflicting interface protocols that may accelerate technological obsolescence or compromise performance. "Future Proofing" current designs and investments from premature and poor choices is essential. The master controller must integrate with a scheduling optimizer, preferably as a virtual aggregator, that combines individual and/or multiple organizations' distributed generator, storage and loads to achieve maximal economic value while meeting each organization's environmental objectives. In the presence of a grid-connected electricity market, those resources ideally should appear to the Market Operator as a single, information driven,

Virtual Generator that is optimized and dispatched in capacity, day-ahead and real-time energy and ancillary markets, to achieve economic, reliability and environmental objectives. Information must flow seamlessly across all system components. New additions, replacements and upgrades must be easy to implement in order to minimize system life cycle costs.

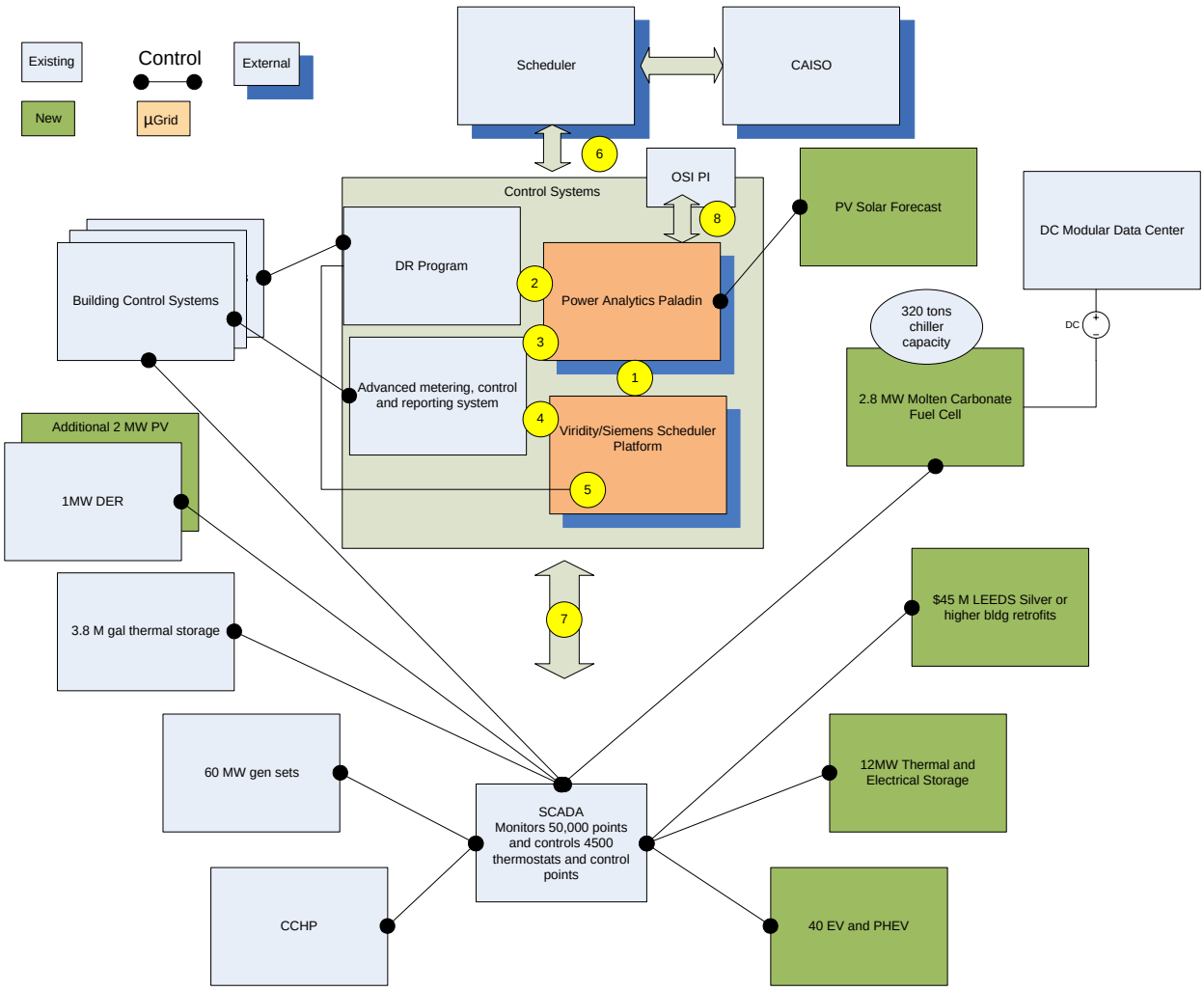

Figure 2 UCSD Microgrid System Diagram

The current system has been designed and constructed using available technology. This represents a best effort using a system-of-systems approach. Each platform was delivered independently to UCSD and interfaces have been customized as required by mutual agreement between participating suppliers. Requirements related to the functioning of the current system were not exposed. The system descriptions that follow are general summaries of the typical

functions performed by each of the systems and devices. A list of the actors is provided in section 2.1.2 below.

Johnson Controls Building Automation System

The heart of the current UCSD campus is a Johnson Control building automation system that interfaces to 90 buildings on campus. Each building has a local autonomous controller that exchanges building status and controls with the Master Building Controller. The interfaces are proprietary to Johnson Controls. The local building controllers interface to building devices and sensors using a combination of communications schemes. Most are proprietary to Johnson Controls, but newer buildings are deploying BACNET based subsystems. For exchanging information with the Power Analytics Paladin system, a file exchange method called Microsoft OPC is used.

Microgrid Requirements: Interface with building sensors and control data using file updates exchanged with Power Analytics Paladin system.

Schneider SCADA

The UCSD Electrical Grid is controlled and monitored by a Schneider SCADA system which interfaces to remote terminal units (RTUs) located at substations and switchyards. Larger campus resources such as the 60 MW generator set and 2.8 MW Fuel Cell, 3 MW CCHP, and 12 MWh Energy Storage Unit also have RTUs. These RTUs use the Modbus registered-based protocol with is typically serial RS-485, but is ported over campus LAN Ethernet over the campus WAN. For load and generation resources UCSD uses Power Measurement Lab (PML) ION meters to collect power and energy information. PML ION meters use Modbus protocol also.

Microgrid Requirements: Report status and perform control, monitor selected analog I/O, digital I/O, accumulators with substation and field devices.

Power Analytics Paladin Controlled Power System

The Power Analytics Paladin Controlled Power System acts as a high level overview collection unit gathering information directly from PML Ion meters using parallel feed to the meter Ethernet port. The Power Analytics Paladin system will control all dispatchable resources on UCSD campus including Demand Response Program and interface with each demand and load resource ensuring the integrity of the electrical system supply, act as the common point of coupling with the local transmission system and interface with Siemens Scheduler Platform for execution of CAISO dispatch commands and real-time metering. The Power Analytics Paladin system feeds real-time campus resource information to Siemens Scheduler Platform for short time frame optimization of available resources.

Microgrid Requirements: Collect information from all campus load and generation resources. Compute real-time resource demands. Control all dispatchable resources. Interface with Siemens Scheduler Platform for exchange of dispatch setpoints. Export all recordable data points in real-time to OSIsoft PI Historian.

Siemens Scheduler Platform

The optimization and scheduling of dispatchable resources, both supply and demand, is carried out by the Siemens Scheduler Platform. It will perform forecasts of demand and supply availability for computing likely scenarios for both Day Ahead and Day-of operations.

Microgrid Requirements: Exchange information with Power Analytics Paladin Controlled Power System. Interface to CAISO Scheduling Coordinator.

OSISoft Pi Historian

All real-time data is collected by the OSISoft Pi Historian. This is used to provide the Siemens Scheduler Platform with historical data for forecasting of resources, both demand and supply.

Microgrid Requirements: Interface to real-time data feeds from Power Analytics Paladin, Schneider SCADA, Johnson Controls Master Building Automation System, and Siemens Scheduler Platform. OSISoft Pi Historian is able to communicate with a wide range of external systems and thus it provides integration capabilities for the UCSD microgrid.

2.1.1. Develop protocol standards for smart end use devices

Except for a limited deployment of BACNET in the newer UCSD campus buildings, none of the current protocols used by the UCSD microgrid are being considered for the SGIP Standards. A list of applicable standards that are available or under development is listed in Figure 3 and Table 1 below. Use of the standards in Figure 3 and Table 1 will help to ensure that microgrid research results can be efficiently transitioned into products.

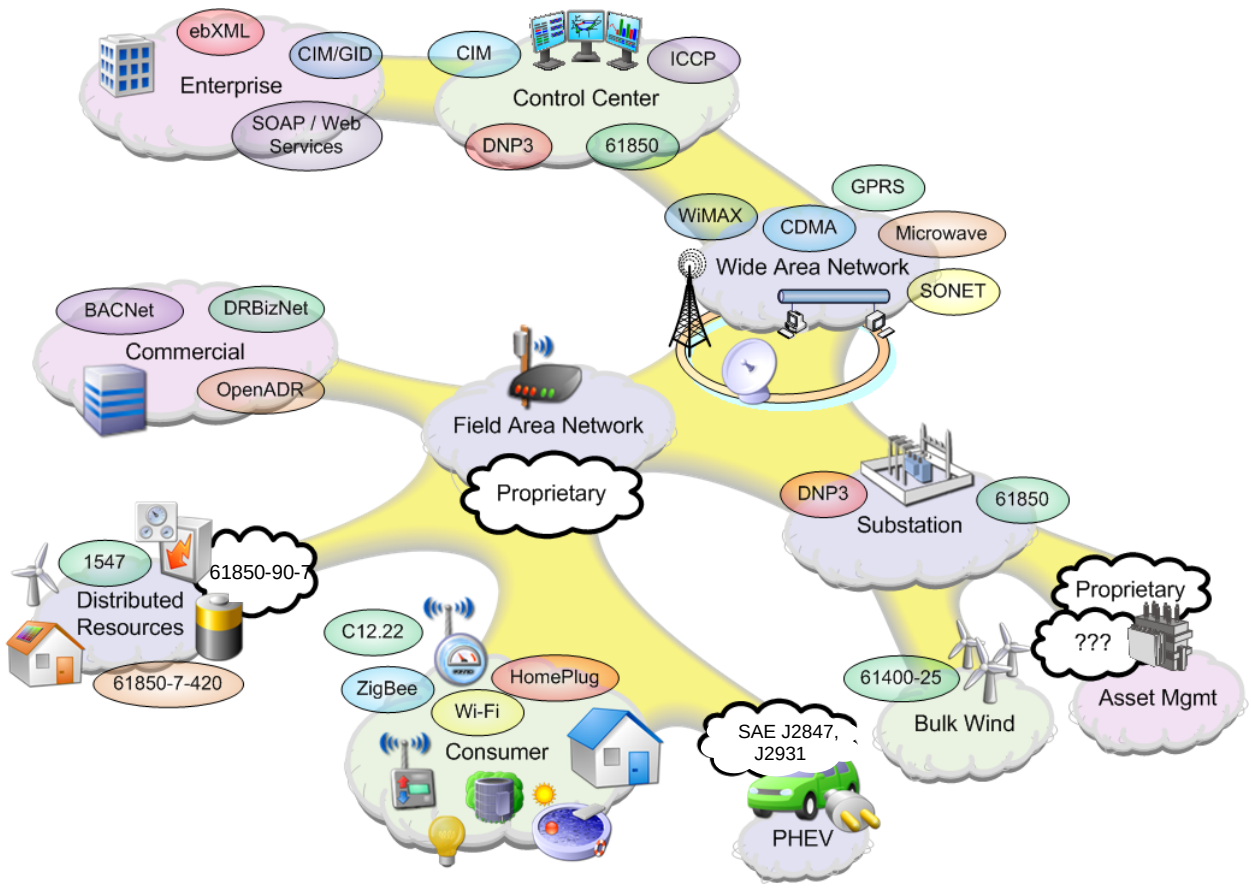

Figure 3 Smart Grid Standard Protocols Applicable to the UCSD Microgrid System

System/Device	Standard	Status
Plug-in Electric Vehicles	SAE J1772	Adopted
	SAE J2836/1	Adopted
	SAE J2846/1	Adopted
Meters	ANSI C12.19, IEC 61850-7-420	Adopted
RTUs	IEEE 1815-DNP 3.0, IEC 61850-7-420. IEC 61850-90-7	Pending Adopted Adopted

System/Device	Standard	Status
Field Devices	IEC 61850	Adopted
Electric Storage Interconnection Guidelines	IEEE 1547.4, 1547.7, 1547.8	Under Development
PV Controllers	IEEE 1547-8	Under Development
IETF	Smart Grid Informational IETF RFCs	Adopted
Common Information Model for Distribution Grid Management	IEC 61968 CIM, IEC 61850-7-420, MultiSpeak V4	Adopted
Common Price Communication Model	Oasis EMIX, ZigBee Smart Energy Profile 2.0, NAESB Requirements	Pending
Common Scheduling Mechanism	OASIS-WS	Pending
Standard DR and DER Signals	NAESB WEQ015, OASIS EMIX, OpenADR, Open AMI-ENT, ZigBee SEP 2.0	Under Development
Standard Energy Usage Information	NAESB Energy Usage Information, OpenADE, ZigBee SEP 2.0, IEC 61968-9, ASHRAE SPC 201p	Under Development
Building Automation	ASHRAE BACNET, SPC201p	Pending, Under Development

Table 1: List of Applicable Smart Grid Standards

2.1.2. Summary of Selected Applicable Standards

As one of the goals for the microgrid controller is transition to production, it's important to develop communications interfaces compliant with widely used interface standards. The relationship between relevant communications standards is shown below in Figure 4.

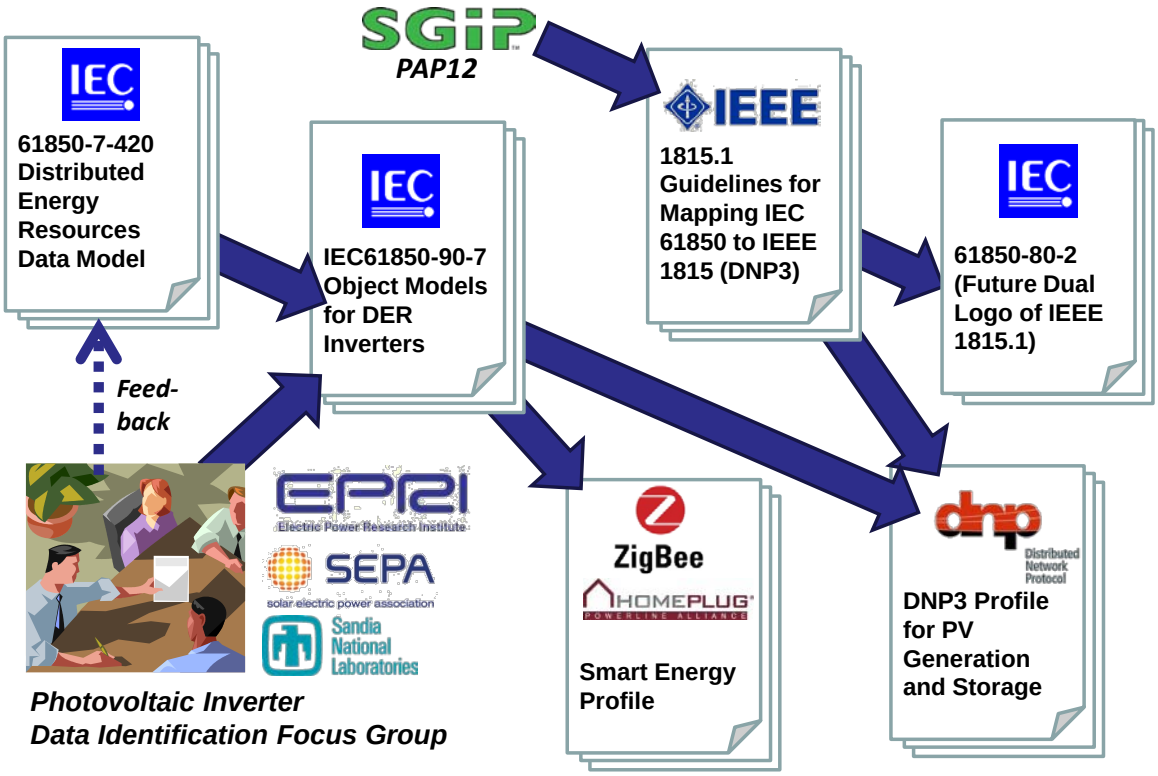

Figure 4 – Relationships between Some DER Communications Standards

Recommended interface standards for the microgrid are summarized below.

2.1.2.1. *IEEE 1547*

Pertinent standards include IEEE Std. 1547-2003 which is the "Standard for Interconnecting Distributed Resources with Electric Power Systems". This standard is technically voluntary, but has been referenced in the Federal Energy Policy Act of 2005 and by many state regulatory commissions including the CPUC.

One of the limitations is that IEEE Std. 1547 only applies to generation up to 10 MVA in size, at the point of interconnection. There is a gap between this level and the 20-MVA limit on "small generation" defined by FERC and many other agencies. In addition to the main standard, there are currently seven sub-parts published or under development as of December 2011.

For microgrids potential IEEE 1547-related issues and concerns are associated with increased PV generator penetration in power systems. In general, PV generators are connected to the utility grid or a microgrid in three different ways – (1) large PV plants that are composed of a number of PV generators that connect to the transmission grid via a dedicated collector system, (2) individual PV generators that connect directly to the distribution grid or to a microgrid, and (3) PV generators that are connected "on the other side of the utility meter", e.g. small PV

generators that are installed on rooftops of residential, commercial, or industrial buildings. The connection type of the PV generators has an impact on the issues that are of concern. Potential issues and concerns for the UCSD microgrid include:

- Effect on Overcurrent Protection Coordination
- Effect on Voltage Regulation
- Effect on Power Losses
- Detection of Unintentional Islanding
- Overvoltage during Islanding

Detailed analysis of these potential microgrid concerns can be found in sections 2.7.6 and 2.7.7.

The 1547 standard is a family of standards that continues to be revised to support new technology including microgrid-related items:

- The base standard, 1547, covers the connection of a generating system of 10MVA or less to the typical utility distribution system, either the primary or the secondary voltage.
- Standard 1547.1 covers the conformance testing of the inverters and equipment covered in the standard.
- Standard 1547.2 is an application guide for the installation of distributed resources.
- Standard 1547.3 is a guide for the communications, including monitoring, information exchanges and control of Distributed Energy Resources (DER).
- Standard 1547.4 is the guide for the design, operation, and integration of DER islands into the utility operations. The guide covers intentional electrical islands, not inadvertent islands.
- Standard 1547.5 is a guide for the interconnection of DER greater than 10 MW into the electric system. This extends the coverage of the 1547 series to devices greater than 10 MW, which was the limit of the original standard 1547.
- Standard 1547.6 extends the standard to operation with utility networks, which were not covered in the original 1547.

As of this writing, there are two new sections being written and discussed.

- Standard 1547.7 will be the guide to conducting impact studies for distributed energy resources. The standard directs the study of the impacts that the DER will have on the electric utility and the other customers. That includes the impact on system protection, power quality, and technology dependent impacts, such as intermittency and dispatchability. The studies that this standard suggests are in-depth assessments of the effect of the DERs on the electric system.

- The newest section will be 1547.8, a recommended practice for establishing methods and procedures that provide supplemental support for implementation strategies for expanded use of IEEE Standard 1547. The purpose of this standard is to provide flexibility in the application of Standard 1547.

2.1.2.2. *IEC 61850-7-420*

The IEC 61850 series of standards was originally developed to define a set of next-generation communications protocols for substation automation. Since its initial release in 2004 its scope has been expanded to include communications with many devices including generation units, fuel cells, energy storage, batteries and photovoltaic systems.

The core of the IEC 61850 series is the "Part 7" standards, which include:

- **IEC 61850 -7-2 Abstract Communication Services Interface.** Specifies the protocol services possible with IEC 61850 such as reading data, operating controls, spontaneously reporting data, file transfer, and the framework for defining data objects.
- **IEC 61850-7-3 Common Data Classes.** Describes the lowest-level data types used for building data objects.
- **IEC 61850-7-4 Basic and substation logical node classes and data object classes.** Describes the data objects built from the Common Data Classes and defines "logical nodes" which are functional groupings of data objects.

The IEC 61850-7-420 standard is an extension of IEC 61850-7-4 that specifically defines the data to be exchanged with DERs. It makes use of the IEC 61850-7-3/4 common data classes, data objects and logical nodes and adds those required for implementing DERs. As shown in Figure 5, it defines a logical model for describing and communicating with a large variety of DER systems of nearly any type.

In Figure 5 – Scope of IEC 61850-7-420, the four-letter codes are the names of classes of logical nodes, each of which may contain dozens of data objects. For instance, MMTR represents a meter, while ZINV represents an inverter and DGEN represents a distributed generation unit.

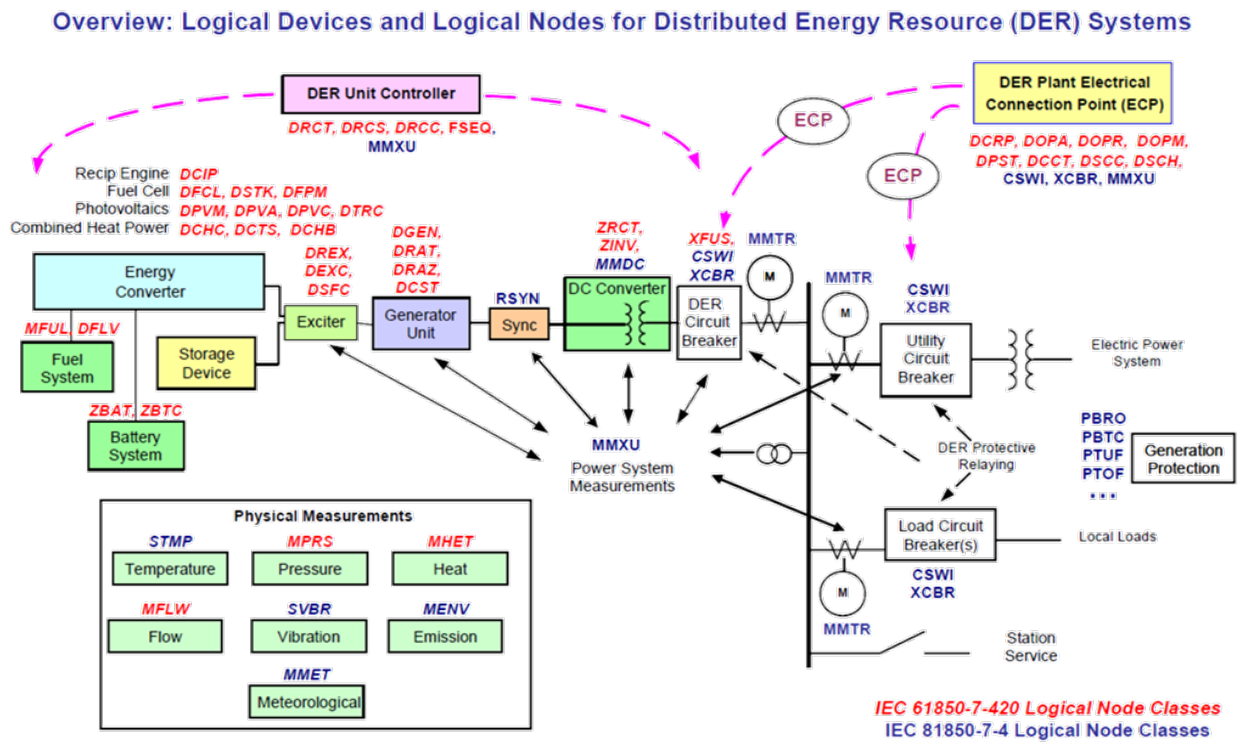

Figure 5 – Scope of IEC 61850-7-420

As of this writing, IEC 61850 is primarily implemented on the following technologies: Manufacturing Message Specification (MMS), ISO presentation and session layers, TCP/IP and Ethernet.

2.1.2.3. *IEC 61850-90-7*

IEC 61850-90-7 is a technical report titled "Communication Networks and Systems for Power Utility Automation – Part 90-7: Object models for photovoltaic, storage, and other DER inverters." When IEC 61850-7-420 was released in 2009, it was recognized that it had only defined the minimum set of data objects and functions that might be provided by DERs. In particular, a new class of "smart inverters" was appearing on the market with the capability to provide "four quadrant" operation. When used with a DC power source such as photovoltaics and some type of electrical storage, these inverters could provide any combination of generating or absorbing real power (Watts) and generating or absorbing reactive power (VARs) at the same time. The capabilities of this class of device had not been captured in IEC 61850-7-420.

The Electrical Power Research Institute (EPRI), in combination with the U.S. Department Energy, the Solar Electric Power Association (SEPA) and Sandia National Laboratories, developed a functional specification for smart inverters that was submitted to the SGIP PAP09 work and eventually became IEC 61850-90-7. This document, not yet released, represents a

consensus from inverter vendors of the standard functions to be provided by smart inverters. It will not officially be a standard but instead it will be a technical report. When more feedback has been provided by the industry on the data and functions listed in this technical report, the IEC intends to re-integrate the information from IEC 61850-90-7 into a new edition 2.0 of IEC 61850-7-420.

The functions discussed in the IEC 61850-90-7 technical report include the following:

- Immediate control functions for inverters
    - Function INV1: connect / disconnect from grid
    - Function INV2: adjust maximum generation level up/down
    - Function INV3: adjust power factor
    - Function INV4: request real power (charge or discharge storage)
    - Function INV5: pricing signal for charge/discharge action
- Modes for volt-VAr management
    - Var management modes using volt/VAr arrays
    - Volt-VAr mode VV11: normal energy conservation mode
    - Volt-VAr mode VV12: maximum VAr support mode
    - Volt-VAr mode VV13: static inverter mode
    - Volt-VAr mode VV14: passive mode
- Modes for frequency-related behaviors
    - Frequency management modes
    - Frequency-watt mode FW21: high frequency reduces active power
    - Frequency-watt mode FW22: constraining generating/charging by frequency
- Dynamic grid support during abnormally high or low voltage levels
    - Dynamic grid support mode TV31: dynamic grid support during abnormally high or low voltage levels
    - Example of dynamic grid support capabilities
- Functions for “must disconnect” and “must stay connected” zones59
    - “Must disconnect” MD curve
    - “Must stay connected” MSC curve
- Modes for watt-triggered behaviors

    - Watt-power factor mode WP41: feeding power controls power factor
- Modes for voltage-watt management
    - Voltage-watt mode VW51: voltage-watt management: generating by voltage
    - Voltage-watt mode VW52: voltage-watt management: charging by voltage
- Modes for behaviors triggered by non-power parameters
    - Temperature mode TMP
    - Pricing signal mode PS
- Setting and reporting functions
    - Establishing settings DS91: modify inverter-based DER settings
    - Event logging DS92: log alarms and events, retrieve logs
    - Reporting status DS93: selecting status points, establishing reporting mechanisms
    - Time synchronization DS94: time synchronization requirements

2.1.2.4. *DNP3 Profile for Basic Photovoltaic Generation and Storage*

The "DNP Application Note AN2011-001: DNP3 Profile for Basic Photovoltaic Generation and Storage" document explains how to implement a subset of the DER functions described in IEC 61850-90-7 using the Distributed Network Protocol (DNP3). DNP3 is a utility-specific protocol used for substation and feeder automation in the majority of power utilities in North America. DNP3 is recognized by the IEEE as IEEE Std. 1815.

The DNP3 Profile for Basic Photovoltaic Generation and Storage is not a standard per se but an application note. By the rules of the DNP Users Group, an application note is submitted to the DNP Users Group by a particular community of DNP3 users. It does not change the standard but explains how to use it for a particular purpose.

This application note was developed by the Photovoltaic Inverter Data Identification Focus Group (DIFG), organized by the Electric Power Research Institute (EPRI) to provide input to IEC 61850-90-7. The application note is based on a draft of IEC 61850-90-7 that was available at the start of 2011. To convert the IEC 61850 services, logical nodes, data objects and data attributes described in IEC 61850-90-7 to DNP3, it applies the principles and rules defined in the "IEEE 1815.1 Draft Standard for Exchanging Information between networks Implementing IEC 61850 and IEEE Std 1815 (DNP3)", which is also under development and due to be released in 2012.

The DNP3 Profile for Basic Photovoltaic Generation and Storage defines the DNP3 function codes, objects and list of data points necessary to implement the following microgrid functions:

- Photovoltaic System Modes and Functions
    - Timing Parameters
    - Use of Broadcasting
    - Function INV1: Connect/Disconnect
    - Function INV2: Adjust Maximum Generation Level Up/Down
    - Function INV3: Adjust Power Factor
    - Function INV4: Charge/Discharge Storage
    - Function INV5: Pricing Signal for PV/Storage
    - Function INV6: Modify PV/Storage Settings
    - Function INV7: Event/History Logging
    - Function INV8: "Status" Reporting
    - Function INV10: Time Synchronization
    - Volt-VAR Array Modes
    - Scheduling
- Interaction Between Settings
    - Remote/Local Mode
    - Automatic/Manual Mode
    - Priority of Last Command
    - Guidelines for Precedence of Settings

2.1.2.5. *OpenADR*

Open Automatic Demand Response (OpenADR) is an application layer protocol standard being developed by the Utility Communications Architecture International Users Group. OpenADR system functions include standardized dispatch, control and pricing signals for Demand Response (DR) and Distributed Generation (DG) as well as related messages for monitoring the status and capabilities of the participating resources.

OpenADR defines DR events which exchange DR signals between service providers particularly utilities, third parties and their customers. OpenADR is written from the perspective of enterprise applications which publish DR signals to customers.

2.1.2.6. *OpenADE*

Open Automatic Data Exchange (OpenADE) is another application layer protocol standard being developed by the Utility Communications Architecture International Users Group (UCAIug).

OpenADE defines systems requirements required for information exchange and control signals between third party energy usage data service providers, and public utility web services, and their customers. OpenADE includes authorization and transfer of customer consumption information and optional price and public messages.

OpenADE interface specifications provide a standardized interoperable machine-to-machine interface. OpenADE will allow transfer of data to customer web and some third party access portals.

OpenADE considers access to the following types of information:

Consumer energy usage information

- Consumer energy management data (e.g. demand response program, events, pricing, actions, and notifications.)
- Consumer meter events including power quality and outage information
- Home Area Network (HAN) related data

2.1.2.7. *OpenAMI Ent*

Open Advanced Metering Infrastructure Enterprise (OpenAMI Ent) is another application layer protocol standard developed by the UCAIug users group. OpenAMI Ent defines functional requirements for a Demand Response Management System (DRMS). OpenAMI Ent defines functional requirements for proactive management of electric and gas utility loads in order to more efficiently and reliably market, produce, transmit and deliver energy. DRMS applications include interrupting load in response to severe grid transients or supply shortages (direct load control or active demand-side management) and customers voluntarily reducing their consumption/load in response to price signals (passive demand-side management).

OpenAMI Ent includes a communications gateway to either directly control the consumer's loads, or to provide a pricing signal which allows the consumer to manage their consumption directly.

2.1.2.8. *ANSI C12 Metering*

ANSI C12 is the default standard in North America for communications between utility back-office systems and consumer meters. There are several parts to the standard, but the following two are the most applicable to DER systems:

- **ANSI C12.19 for Utility Industry End Device (Meter) Data Tables.** This is the definition of the data model used by the meters, organized as a set of tables. The tables define measurements, configuration parameters, and methods for remotely invoking procedures. The standard also permits extension of the tables by vendors (an option which is frequently used) and defines a method for representing the tables in eXtensible Markup Language (XML).
- **ANSI C12.22 Protocol Specification for Interfacing to Data Communication Networks**. This standard defines how to transport the tables defined in ANSI C12.19 over any reliable network. The standard is often applied to Internet Protocol (IP)-based networks, although it is not limited to those. It specifies an appropriate security mechanism.

2.1.2.9. *IEC 60870-6 Inter-Control Center Protocol*

IEC 60870-6, also known as Telecontrol Application Service Element (TASE.2) and Inter-Control Center Communications Protocol (ICCP)) is an application layer communication standard for communications between control centers. It is extremely widespread in use: almost every Energy Management System currently deployed contains an implementation of this protocol. It is also used in power plants, factory automation, and process control automation. It is typically used over Internet Protocols and wide-area-networks.

As with other standards, IEC 60870-6/TASE.2 consists of many sections, but the following represent the core of the specification:

- IEC 60870-6-503: The application modeling and service definitions
- IEC 60870-6-702: The application profile (suite of layered protocols)
- IEC 60870-6-802: The data object model

2.1.2.10. *SAE Plug-in Electric Vehicle Standards*

The Society of Automotive Engineers has produced a number of standards relating to electric vehicles which may therefore be of interest to implementers of DERs.

The SAE was first to publish a contemporary AC charge coupler standard when SAE J1772™ was published in January 2010. This coupler is also incorporated into IEC 62196-2. Future revisions of the document will incorporate requirements for DC charging. SAE J1772™ has been included in the NIST list of smart grid standards.

SAE is near publication of the first charger power quality specification, SAE J2894. The document focuses on characteristics of the AC service to which the charger will be connected, as well as the impact chargers can have on service quality. This document is targeted to be included in the NIST list of smart grid standards.

SAE is working in on a broad range of documents related to vehicle to grid and vehicle to off-board charger communications (the J2836 and J2847 series of documents and J2931 and J2953).

These Task Forces work closely with their IEC and ISO counterparts in an effort to harmonize standards.

Finally SAE has begun work on J2954, a wireless charging standard. Again this Task Force is working closely with their ISO counterparts in an effort to harmonize standards.

2.1.2.11. *Smart Energy Profile*

In late 2006, an effort was undertaken in the ZigBee Alliance to define a set of commands and services (i.e. a "profile") for performing functions over the ZigBee standard wireless home area network that were related to energy usage. This effort was based on interest from meter companies, utilities and in home device manufacturers. The application profile was designated as the "ZigBee Smart Energy Profile (SEP)". Capabilities added to SEP 1.1 include over the air upgrade, pricing options for blocks/tiers, and support for multiple energy services interfaces and trust center swap out capability.

In late 2009, a liaison was launched between the ZigBee Alliance and the HomePlug Alliance to define the next evolution of the profile, dubbed "SEP 2.0." SEP 2.0 represents an evolution in the SEP specification for HAN communications because it will be layered, separating the application and transport profiles, and making use of the Internet Protocol (IP) suite.

2.1.2.12. *NIST IR 7628 Guidelines for Smart Grid Cyber Security*

This document is a NIST Inter-Agency Report (IR) on security for the smart grid, described in its executive summary as follows:

> *This three-volume report, **Guidelines for Smart Grid Cyber Security**, presents an analytical framework that organizations can use to develop effective cyber security strategies tailored to their particular combinations of Smart Grid-related characteristics, risks, and vulnerabilities. Organizations in the diverse community of Smart Grid stakeholders—from utilities to providers of energy management services to manufacturers of electric vehicles and charging stations—can use the methods and supporting information presented in this report as guidance for assessing risk and identifying and applying appropriate security requirements.*

This document provides an abstract model of the power system automation system, defining as many communications interfaces as possible. It then classifies these interfaces by their security requirements and recommends specific security controls to be applied for each of the interface classes.

At the time of this writing, NIST is currently working on a draft SGIP document , "Guide for Assessing the High-Level Security Requirements in NISTIR 7628, Guidelines for Smart Grid Cyber Security." The document provides a foundation to facilitate a security assessment based on the NISTIR 7628 high-level security requirements. Thus the NIST guide will be useful in assessing the security requirements for the microgrid master controller.

2.1.2.13. *NERC Critical Infrastructure Protection*

The North American Electric Reliability Corporation (NERC) Critical Infrastructure Protection (CIP) standards are rapidly becoming a way of life for utility information technology departments. At the moment, these standards apply only to the bulk power system, i.e. transmission and bulk generation. However, it is expected that their scope will expand to include distribution systems and therefore microgrids.

2.1.2.14. *IEC 61968-9 Metering Network Messages*

The IEC 61968 series of standards define data models, services and messages for various aspects of distribution management systems. IEC 61968 Part 9, released in 2009, defines messages for meter reading and control, based on the object models defined in the IEC 61970 Common Information Model (CIM) set of standards. These messages are to be used between control center applications and the metering head-end system, which would then convert them into some other technology such as ANSI C12 for reaching the meter. Many of the messages are concerned with demand response, direct load control and other functions implemented by microgrids.

2.1.2.15. *IEC 62351 Power System Security*

This set of specifications defines security solutions for the power utility protocols produced by the IEC, namely IEC 61850, IEC 60870-5 (and by association, DNP3), IEC 60870-6 TASE.2/ICCP, and others as they are developed. These describe specific security controls as opposed to the more general risk management processes and architectures defined in some other specifications. The core specifications include:

- IEC 62351-1 Security for TC57 Standards and End-to-End Security (Introduction)
- IEC 62351-2 Glossary
- IEC 62351-3 Security Using Transport Layer Security (TLS)
- IEC 62351-4 Security for Manufacturing Messaging Specification (MMS)
- IEC 62351-5 Security for IEC 60870-5 and DNP3
- IEC 62351-6 Security for IEC 61850

The scope of IEC 62351 has also been expanded to include general power system security issues, so the following parts have also been added to the standard.

- IEC 62351-7 Network and System Management Objects
- IEC 62351-8 Role-based Access Control (newly released)

- IEC 62351-9 Key Management (in development)
- IEC 62351-10 Security Architecture (in development)

2.1.2.16. *UL 1741 Interconnection System Equipment for Use with DER*

This document, titled "Inverters, Converters, Controllers and Interconnection System Equipment for Use with Distributed Energy Resources", is the Underwriters Laboratories (UL) standard to which any DER equipment must comply if it is to be legally installed in a customer household. It references IEEE Std. 1547 and IEEE Standard 1547.1.

2.1.2.17. *ANSI/ASHRAE 135-2008/ISO 16484-5 BACnet*

The ANSI/ASHRAE 135-2008/ISO 16484-5 BACnet - A Data Communication Protocol for Building Automation and Control Networks protocol is in use in the UCSD microgrid. BACnet defines an information model and messages for building system communications at a customer's site. BACnet incorporates a range of networking technologies to provide scalability from very small systems to multi-building operations that span wide geographic areas using IP protocols.

BACnet is a mature standard adopted internationally as EN ISO 16484-5 and is used in more than 30 countries. BACNet serves as a customer side communication protocol at the facility interface and is relevant to price, demand response and DER microgrid capabilities.

2.1.2.18. *Smart Grid Interoperability Panel Priority Action Plans*

The Smart Grid Interoperability Panel (SGIP) sponsored by NIST currently has three Priority Action Plans (PAPs) addressing microgrid-related issues:

- **PAP07 – Energy Storage Interconnection Guidelines**

  This is the working group aiding and supervising the results of the DER standards development work happening in IEEE 1547 and IEC 61850-90-7. It is also working on promoting the UL 1741 standard for interconnection system equipment for use with DER.

- **PAP08 – CIM/61850 for Distribution Grid Management**

  The working group for this action plan is developing object models for IEC 61968 and IEC 61850 for general management of the distribution system, including DER.

- **PAP09 – Standard DR and DER Signals.**

  The working group for this action plan is developing an implementation of the OpenADR protocol using three other web-based technology standards: Energy Market Information (EMIX), Energy Interoperation (EnergyInterop) and WS-Calendar. This work is based on the OpenADR use cases. Despite its name, the group recently agreed to

defer the work on signals for DER in favor of concentrating on demand response. The working group is also to develop an appropriate SEP application profile but not much work has been done on it to date.

2.1.3. Identify all system actors and information exchanges

Actors are a term used in Universal Modeling Language (UML), a standard design and development methodology. Actors perform control, monitoring and decision making actions. Actors can be systems, devices or people. Microgrid actors and their relationships are shown below in Figure 6 UCSD Microgrid Actors.

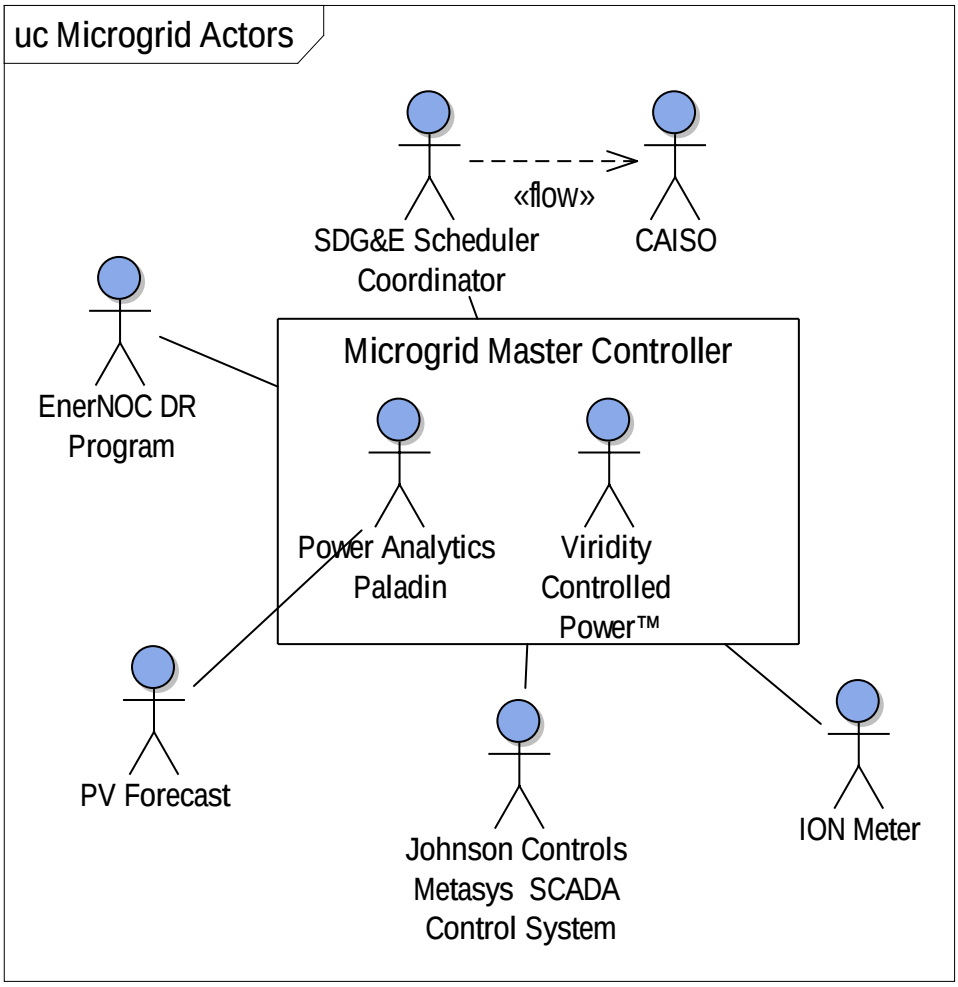

Figure 6 UCSD Microgrid Actors

System Actors are shown in Table 2: Microgrid Actors below.

UCSD Microgrid Actors	Type
Power Analytics Paladin Controlled Power	System
Viridity/Siemens Scheduler/Optimizer	System
Johnson Control Master Building Controller	System
Schneider SCADA	System
2 MW PV	Device
1 MW DER	Device
3.8Mgallon Thermal Storage Unit	Device
60 MW generator set	Device
3 MW CCHP	Device
Electric Vehicle Supplier Equipment	Device
12 MWh Electric Storage Unit	Device
2.8 MW Fuel Cell	Device
DC Modular Data Center	Device
OSI Soft PI Historian	System
CAISO Scheduling Coordinator	System
CAISO Electric Control Network	Device
Programmable Logic Controllers	Device

Table 2: Microgrid Actors

2.1.4. Identify key points of interoperability

As shown in Figure 2 UCSD Microgrid System Diagram, the key microgrid interfaces are those internal to the microgrid and those external to the microgrid. Key internal interfaces are those between the microgrid components which include the Power Analytics Paladin-to-Viridity/Siemens Scheduler Platform interface, the Power Analytics Paladin-to DR Program interface and the Power Analytics Paladin-to-Advanced Metering, control and reporting system. Other key points of operability presently are the meter and RTU interfaces, the distributed energy resources including the solar PV s, back-up generators, fuel cells and energy storage unit.

Key external interfaces are the microgrid-to-scheduler which is used to coordinate energy schedules with CAISO and the microgrid-to-SCADA system interfaces. The microgrid communicates with SCADA systems in the Building Control Systems and to SCADA systems which control the UCSD electrical system.

As the UCSD Microgrid evolves the demand response resources will become a key point of interoperability including the scheduling of demand response resource and communication of information to dispatchable demand resources.

Key points of interoperability are indicated in the numbered yellow circles in Figure 1 and shown in Table 3 below.

Interoperability Point	Source Component	Destination Component
1	Paladin Power Analytics	Viridity/Siemens Scheduler Platform
2	Paladin Power Analytics	DR Program
3	Paladin Power Analytics	Advanced metering, control and reporting system
4	Viridity Vpower/Siemens Scheduler Platform	Advanced metering, control and reporting system
5	Viridity Vpower /Siemens Scheduler Platform	DR Program
6	Microgrid	Scheduler
7	Microgrid	SCADA Systems
8	OSI PI server	Paladin Power Analytics / OSI PI server

Table 3: List of Key Microgrid Points of Interoperability

2.1.5. Identify functional and technical and performance requirements including reliability and security

2.1.5.1. *Functional Requirements*

Detailed lists of Smart Grid Use Cases and their associated Functional Requirements used for references for the microgrid can be located on the Smart Grid Information Clearinghouse and EPRI Use Case Repository websites:

http://www.sgiclearinghouse.org/UseCases

http://www.smartgrid.epri.com/Repository/Repository.aspx

Specific requirements for the UCSD microgrid are listed below. Requirements are numbered to facilitate mapping of requirements to the system field acceptance tests contained in section 2.5.

1.0 Optimize Microgrid Operation
The microgrid controller shall optimize the utilization of resources under its control.

1.1 Balance Reliability and Cost Factors
The microgrid controller shall manage the optimization of resources to simultaneously support both cost and reliability goals.

2.1 Manage Microgrid for Economic Benefit
The microgrid controller shall manage resources to minimize total operational costs of systems under its control.

2.2 Manage Microgrid for Reliability
The microgrid controller shall manage resources to maximize system reliability as measured by the System Average Interruption Frequency Index (SAIFI)

3.1 Market Resources
The microgrid controller shall coordinate day-ahead scheduling with the SDG&E scheduler coordinator. UCSD coordinates scheduling through SDG&E. SDG&E coordinates scheduling with the California Independent System Operator (CASISO).

3.2 Manage Demand
The microgrid controller shall manage demand through coordination with the EnerNOC DR program.

3.2.1 Manage Demand Participation
The microgrid controller shall allow participation in all Demand Response events from EnerNOC.

3.2.2 Manage Demand Automation
The microgrid controller shall automate signals from the Viridity Scheduler to adjust stored control settings up or down.

3.3 Manage Storage
The microgrid controller shall manage storage.

3.4 Manage Supply
The microgrid controller shall manage supply.

3.5 Incorporate Renewables
The microgrid shall manage the use of renewable energy sources.

4.1 Manage Thermal Storage
The microgrid controller shall manage thermal storage.

4.2 Manage Electrical Storage
The microgrid controller shall manage electrical storage.

4.3 Manage CCHP
The microgrid controller shall manage the Combined Cycle Heat and Power cogeneration plant. The CCHP uses a 3 MW steam generator to float the load.

4.4 Manage Gen Sets
The microgrid controller shall manage the gen sets. Gen sets are used to provide additional power when needed.

4.5 Manage PV
The microgrid shall manage photovoltaic solar production.

4.6 Manage Fuel Cell

The microgrid controller shall manage the fuel cell.

4.7 Manage other DER

The microgrid controller shall manage Distributed Energy Resources.

2.1.5.2. *Security Requirements*

The three volume NIST Guidelines for Smart Grid Cyber Security IR 7628 covers the entire spectrum of Smart Grid related security issues. This document forms the basis of microgrid security requirements.

5.1 Security Design

The design of the microgrid controller shall be consistent with the Smart Grid cybersecurity guidelines described in NIST Guidelines for Smart Grid Cyber Security IR 7628.

5.2 Security Operation

The operation of the microgrid controller shall be consistent with the Smart Grid cybersecurity guidelines described in NIST Guidelines for Smart Grid Cyber Security IR 7628.

5.3 Customer Data Integrity

Data integrity of customer data shall be maintained.

5.4 Utility Data Integrity

Data integrity of utility data shall be maintained.

5.5 Third Party Data Integrity

Data integrity of third party data shall be maintained.

5.6 Customer Data Authentication

Authentication of customer data shall be performed.

5.7 Utility Data Authentication

Authentication of utility data shall be performed.

5.8 Third Party Data Authentication

Authentication of third party data shall be performed.

5.9 Tamper Proof Pricing Signals

Tamper proof records of pricing signals sent shall be saved (nonrepudiation).

5.10 Tamper Proof Transaction Records

Tamper proof records of transaction authentication sent shall be saved

5.11 Tamper Proof Transaction Date/Time Stamps

Tamper proof records of transaction date/time stamps sent shall be saved (nonrepudiation).

5.12 Customer Data Confidentiality

Confidentiality of customer data shall be maintained.

2.1.5.3. *Privacy Requirements*

6.1 Third Party Trusted Relationships

The microgrid controller system shall establish a trusted relationship with any third party prior to exchanging consumer information with that third party.

6.2 Customer Encrypted Communication Channels

The microgrid controller system shall exchange consumer information using encrypted communication channels.

6.3 Third Party Encrypted Communication Channels

The microgrid controller system shall transmit consumer information using encrypted communication channels to authorized third parties.

2.1.5.4. *Timing Requirements*

7.1 Message Time Stamps

The microgrid controller system shall time stamp all messages.

7.2 Synchronized Time Stamps

The microgrid controller system shall synchronize time stamps to a primary publically available time source.

7.3 Publicly Available System Time Synchronization

The microgrid controller system shall synchronize scheduled event times to the primary publically available time source.

7.4 External System Time Synchronization

To ensure scheduled events occur at the correct time, the microgrid controller system shall ensure external systems have the ability to synchronize to the primary time source.

7.5 Randomized Start Times

To reduce the impact of schedule events based on Critical Peak Pricing (CPP) rates, the microgrid controller shall use randomized times to start events. SEP 2.0 parameters such as RandomizedDateTimeInterval, randonmizeStart and randomizeEnd are one possible method which can be used to randomize event start times.

2.1.5.5. *Reliability Requirements*

8.1 Availability

The microgrid controller shall be available 99.2% of the time when electrical power is available. Availability desired is 167 of the 168 hours in a standard 7 day week e.g. 167/168 hours = 99.2. Intent of this requirement is to allow 1 hour per week of either unscheduled outage or scheduled maintenance.

2.2. Evaluate and Map Interoperability Requirements

UCSD Microgrid Use Cases were derived from system documentation and meetings with the UCSD Energy Services manager, and microgrid team members including the PI, deputy PI, and Power Analytics technical team. The Microgrid Use Cases are shown in the diagram below.

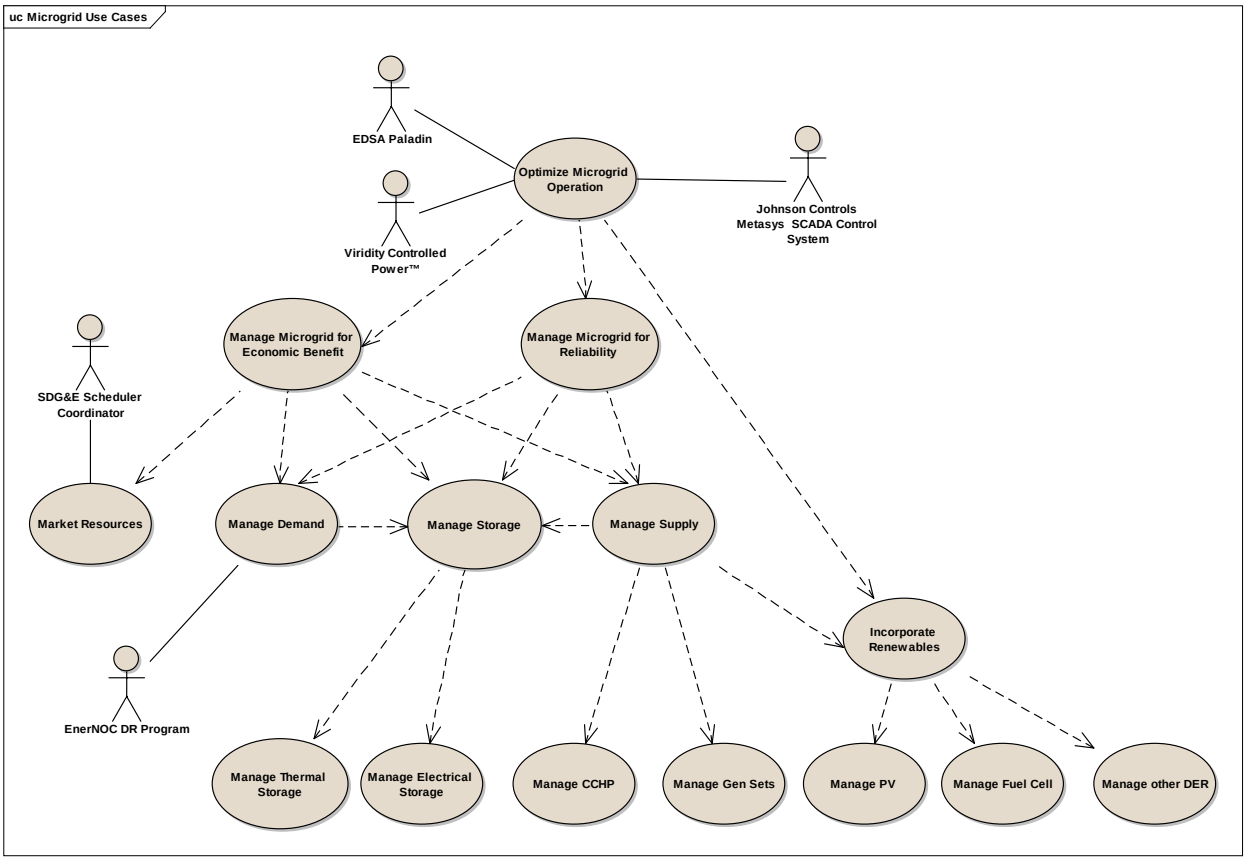

Figure 7 UCSD Microgrid Use Cases

2.2.1. Map requirements to technology independent information and transaction models

Information and transaction models map system requirements to system communication interface in a technology-neutral manner. Table 4 maps the microgrid system requirements to the previously identified interoperability points. The interoperability points are defined in Table 3: List of Key Microgrid Points of Interoperability.

	I/O Point 1	I/O Point 2	I/O Point 3	I/O Point 4	I/O Point 5	I/O Point 6	I/O Point 7	I/O Point 8
1.0 Optimize Microgrid Operation	●	●	●	●	●	●	●	
1.1 Balance Reliability and Cost Factors	●	●	●	●	●	●	●	
2.1 Manage Microgrid for Economic Benefit	●	●	●	●	●	●	●	
2.2 Manage Microgrid for Reliability			●	●	●	●	●	
3.1 Market Resources		●	●			●		
3.2 Manage Demand		●	●				●	
3.2.1 Manage Demand Participation		●	●			●		
3.2.2 Manage Demand Automation		●	●	●	●	●	●	
3.3 Manage Storage							●	
3.4 Manage Supply						●	●	
3.5 Incorporate Renewables	●	●	●				●	
4.1 Manage Thermal Storage	●						●	
4.2 Manage Electrical Storage	●						●	
4.3 Manage CCHP	●						●	
4.4 Manage Gen Sets	●						●	
4.5 Manage PV	●	●	●				●	
4.6 Manage Fuel Cell	●	●	●				●	
4.7 Manage other DER	●	●	●	●	●	●	●	

5.1 Security Design	●	●	●	●	●	●	●	●
5.2 Security Operation	●	●	●	●	●	●	●	●
5.3 Customer Data Integrity	●	●	●		●			●
5.4 Utility Data Integrity		●	●					
5.5 Third Party Data Integrity	●	●	●			●	●	●
5.6 Customer Data Authentication		●	●		●			
5.7 Utility Data Authentication	●	●	●					
5.8 Third Party Data Authentication	●	●	●		●			●
5.9 Tamper Proof Pricing Signals	●	●	●	●	●			●
5.10 Tamper Proof Transaction Records	●	●	●	●	●			●
5.11 Tamper Proof Transaction Date/Time Stamps					●			●
5.12 Customer Data Confidentiality	●	●	●	●	●	●	●	●
6.1 Third Party Trusted Relationships					●			●
6.2 Customer Encrypted Communication Channels	●	●	●		●			●
6.3 Third Party Encrypted Communication Channels					●			●
7.1 Message Time Stamps	●	●	●	●	●	●	●	●
7.2 Synchronized Time Stamps	●	●	●	●	●	●	●	●
7.3 Publicly Available System Time Synchronization						●	●	●
7.4 External System Time Synchronization						●	●	●
7.5 Randomized Start Times		●				●	●	
8.1 Availability	●	●	●	●	●	●	●	●

Table 4 Transaction and Information Model Mapping

2.2.2. Reference existing information models

The GridWise Architecture Council (GWAC) stack is an information model that provides a framework for defining exchanges of information between systems. The UCSD microgrid information exchanges can be defined in terms of the GWAC stack.

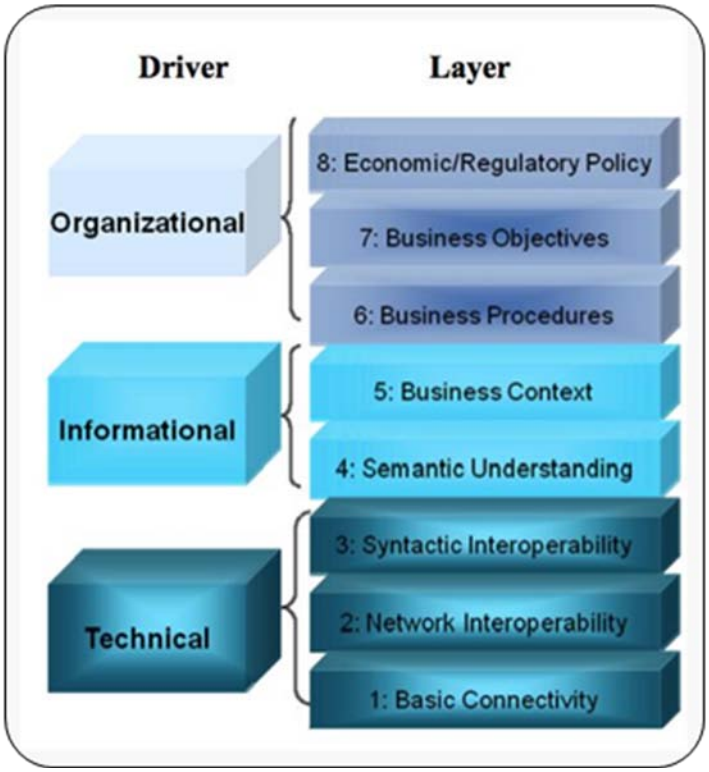

Figure 8 GWAC Stack Information Model

For the UCSD microgrid, a layered communications model consistent with the OSI network model is recommended. Figure 9 shows the recommended layered communications stack for the UCSD microgrid. The OPC, BACnet, TCP/IP and Ethernet recommended communications protocols are used in the UCSD microgrid.

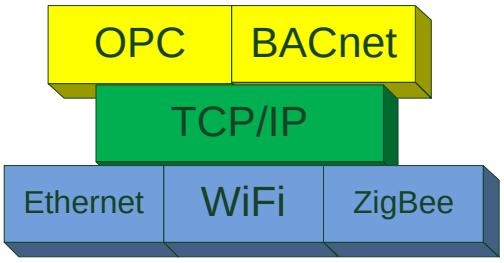

Figure 9 Recommended Communications Protocols

2.3. Evaluate and Adopt an Information and Transaction Model Framework

2.3.1. Document the methodology that is used for the collection of technology independent information and transaction models

Functional Requirements are grouped into logical components and then mapped against proposed Smart Grid Elements. These Smart Grid Elements form the foundation for the UCSD Smart Grid System Architecture.

The Smart Grid can be simply defined as monitoring and automation of the power delivery system through the application of advanced communications and digital information technologies. The purpose of the Smart Grid is to enable two-way flows of power and information to increase engagement of the consumer and increase the level of service provided by the utility.

Figure 10 below graphically identifies the elements and applications that are the building blocks of the Smart Grid and how they are dependent on each other. It also highlights the fact that several customer-focused applications are heading UCSD's way that will facilitate a smarter grid.

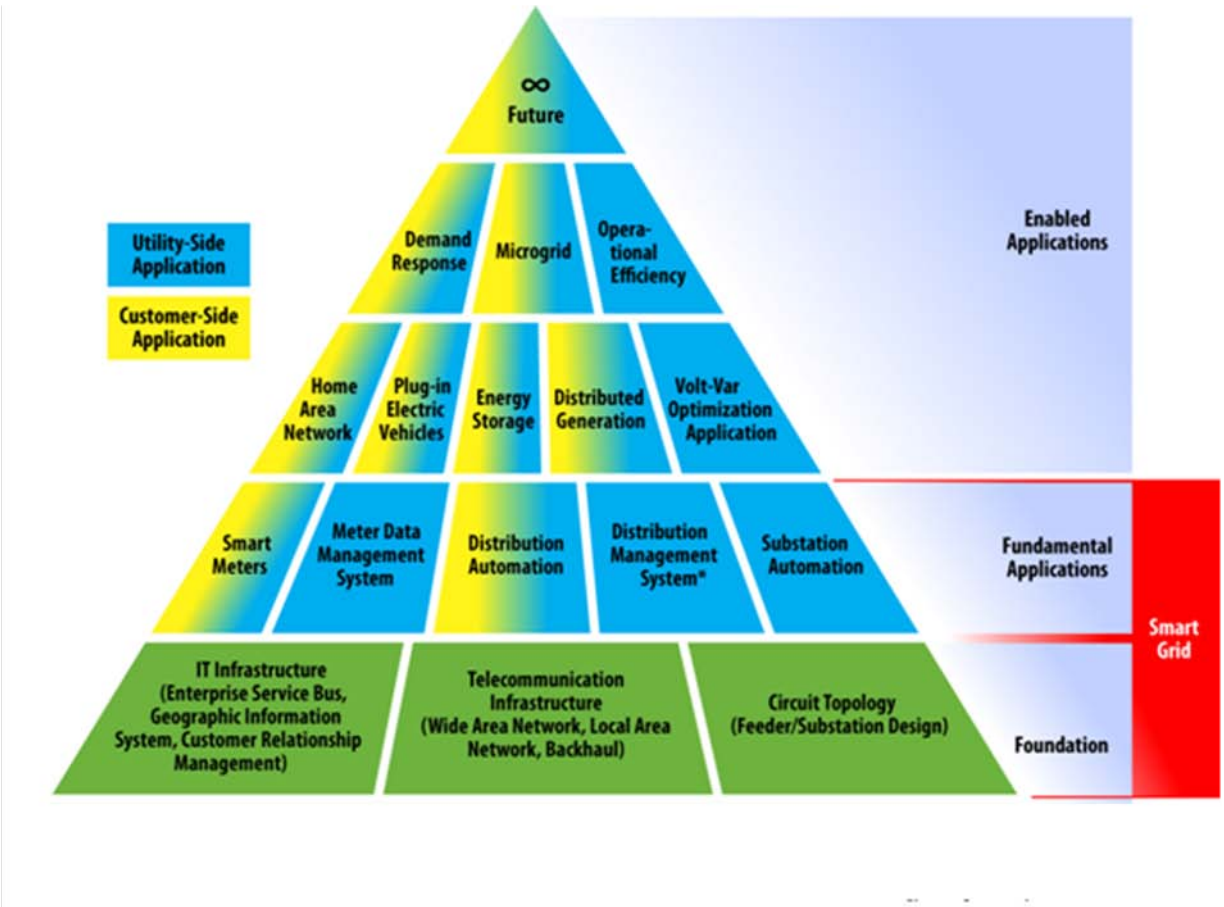

Figure 10 : Smart Grid Framework

The Smart Grid Framework diagram is arranged to indicate that the feasibility of a given element depends on some or all of the elements below it in the lower layer(s) of the diagram. For example, the full functionality of smart meters is only possible if IT and telecommunication infrastructures are in place. Basic elements are referred to as Smart Grid foundational elements.

Smart Grid Foundational Elements:

1. IT Infrastructure
2. Telecommunication Infrastructure
3. Power System

To implement a Smart Grid, UCSD must first ensure a strong foundation for power grid operations. UCSD's Smart Grid Framework should align with UCSD's values, purpose and mission; and ensure prudent management of assets to ensure optimal output from the UCSD power system. Building on this framework by adding further elements of the Smart Grid will ensure maximum benefits are realized from the implementation of Smart Grid applications.

2.3.2. The Intelligrid Methodology

The EPRI IntelliGrid Consortium recommended methodology was used to perform the microgrid project planning, requirements definition, architecture development, technology selection and development.

The steps described in this process are illustrated in Figure 11 illustrates the initial requirements definition and systems architecture development processes, while Figure 4 illustrates the later steps of business case analysis, technology selection, and deployment.

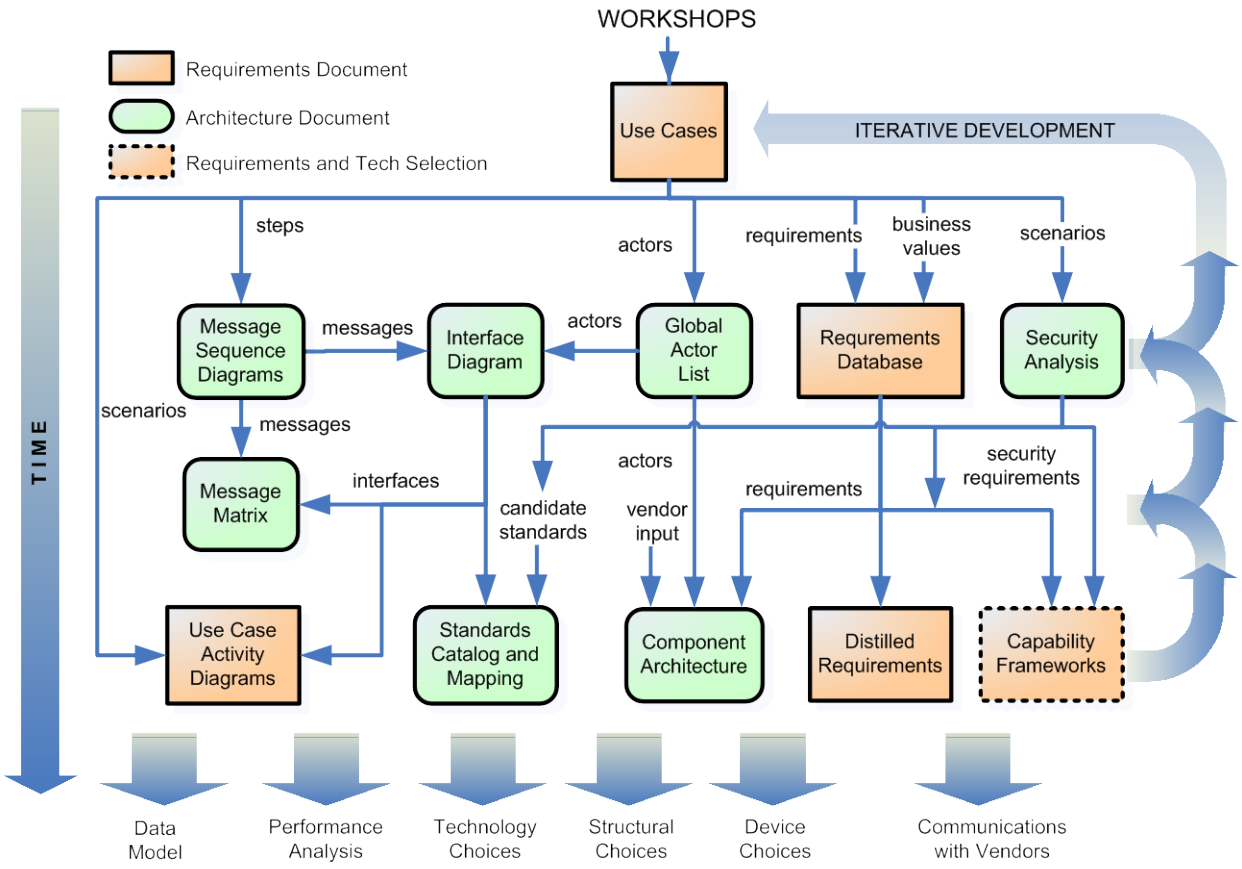

Figure 11 - Requirements and Systems Architecture Process

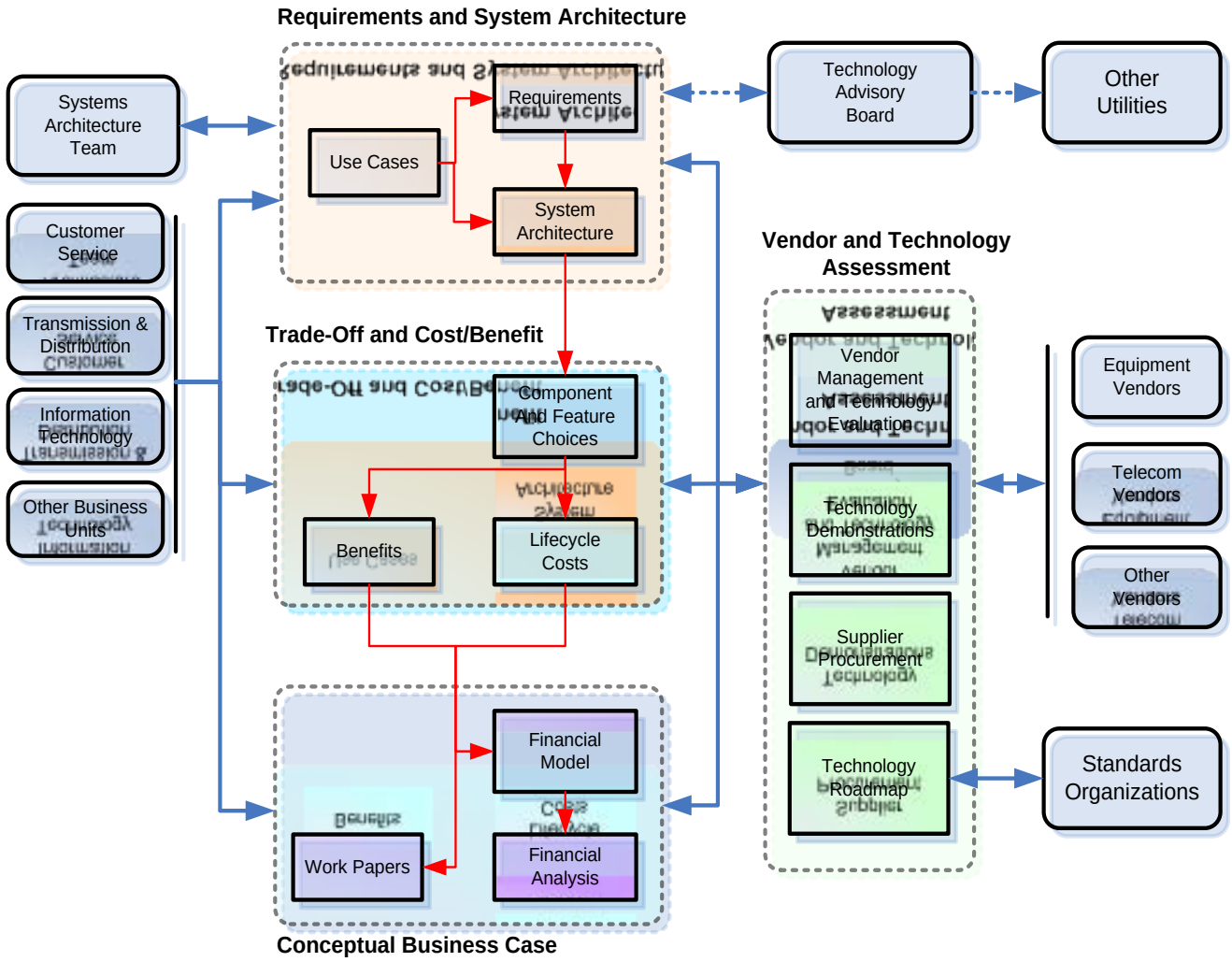

Figure 12 Technology Selection, Business Case and Deployment Process

2.3.3. Plan Projects

This section describes the initial planning phases of Smart Grid projects, performed by the UCSD microgrid team.

Determine Business and Regulatory Drivers

It is important that subsequent steps be driven by the business needs of the organization. Before beginning an advanced automation project, it is important to be clear what financial problems or regulatory compliance issues are being addressed. Some examples include:

- Requirements for information sharing with other organizations

- Requirements for improving energy efficiency or reliability
- Potential new service offerings or revenue streams
- Reduction of costs by automating processes that were previously manual

Choose Focus Areas

IntelliGrid projects generally focus on one of the following areas of utility automation:

- Consumer Participation
- Network Optimization
- Wide-Area Reliability
- Real-Time Simulation
- Energy Markets

Choose Projects

Within the chosen focus areas, particular projects are selected for implementation; for instance the UCSD microgrid falls within the categories of Network Optimization and Energy Markets.

Identify Candidate Technologies

Determine which international and national standards, industry agreements, best practices, and de facto standards apply in this environment. The list of applicable technologies on the IntelliGrid Architecture web site may serve as a starting point. Please see section 2.1.2 for the set of applicable UCSD microgrid standards.

Define a High-Level Business Case

Based on business and regulatory drivers, determine the high-level benefits and costs you expect to find as a result of implementing the project. This is the first decision point where the organization must determine whether it is feasible to proceed with the project. The business cases justifications for the UCSD include reducing costs, fostering community collaboration and innovation, and advancing research in the areas of renewable energy, microgrids and smart grid systems.

Microgrid Controller business requirements derived from the business case are:

1.0 Optimize Microgrid Operation

1.1 Balance Reliability and Cost Factors

2.1 Manage Microgrid for Economic Benefit

2.2 Manage Microgrid for Reliability

Refine Process for Your Organization

The IntelliGrid process was refined for the UCSD microgrid team by determining which steps were applicable to the microgrid project. As illustrated in Figure 13 , the microgrid project followed three concurrent streams of effort: external engagement, system design, and technology development.

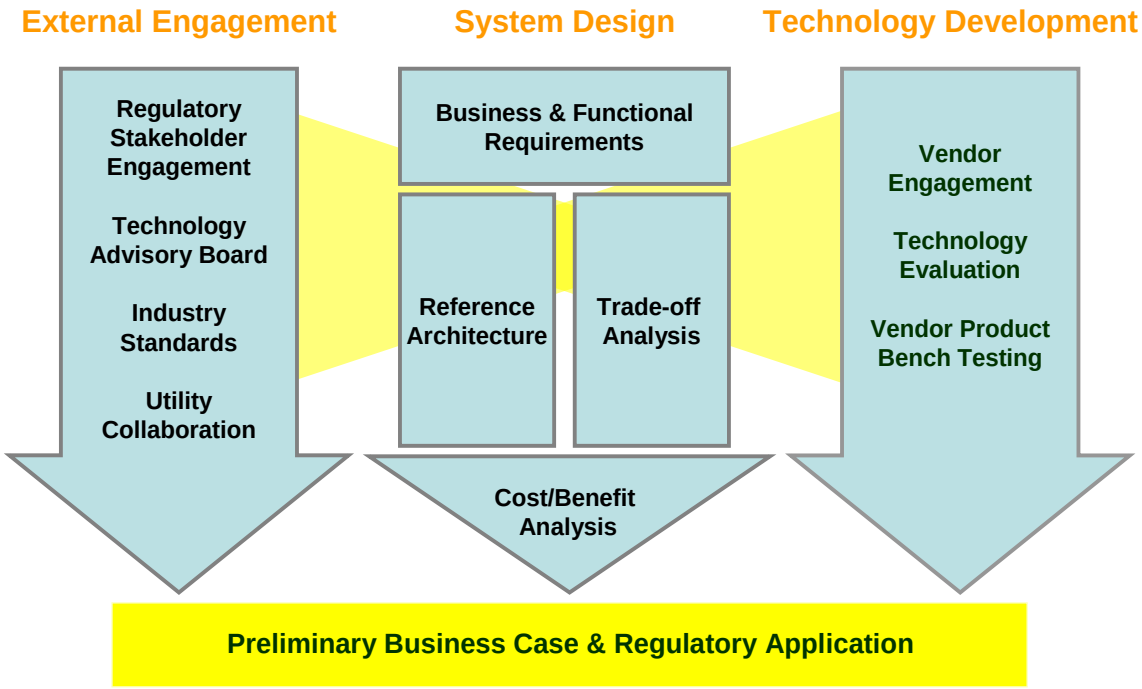

Figure 13 Project Streams

Examples of external engagement for the UCSD microgrid include collaboration with external stakeholders including CAISO, utility collaboration with SDG&E, and the use of industry standards. For system design, the functional requirements and reference architecture were developed. The technology selection process begins in the earlier phases with the development of requirements and the initial technology assessment. Vendor and industry engagement was supported early in the project with EnerNex, Power Analytics and Viridity as active members of the UCSD team. Figure 14 below illustrates particular technologies which were implemented to develop a platform-independent architecture.

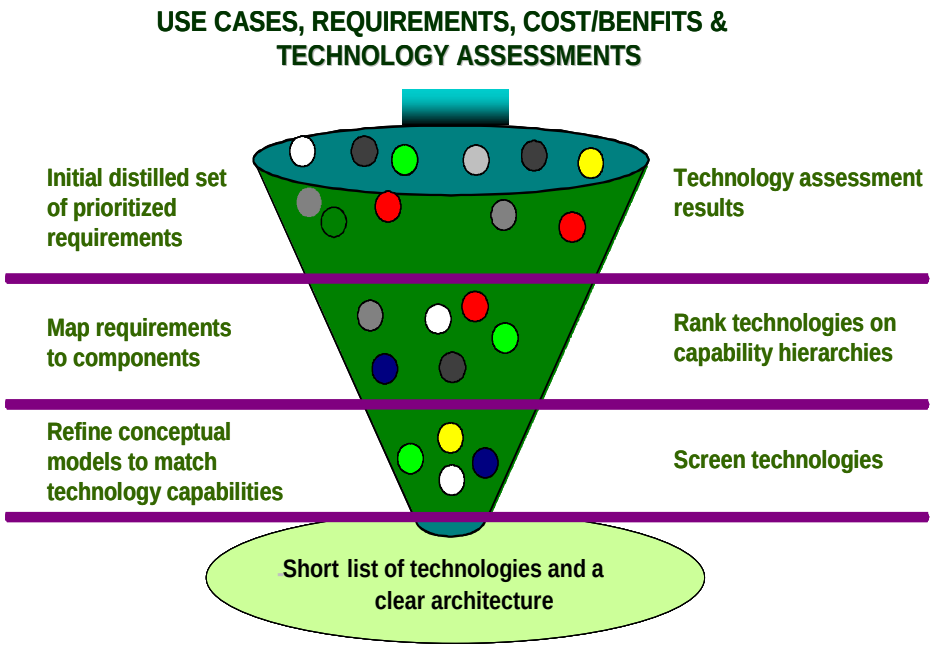

Figure 14 Overview of Technology Selection Process

2.4. Map the Information and Transaction Models

2.4.1. Specify implementation technologies for present day requirements

The microgrid controller implementation technologies include a service orientated architecture (SOA), BACnet and OPC Unified Architecture, Inter-Control Center Communications Protocol (ICCP), Open Automated Demand Response (OpenADR) and IEC 61850 standardized communication interfaces.

2.4.2. Documents the overall system architecture and specific system design

The microgrid system requirements are documented in Section 2.1. The high level system architecture is shown below in Figure 15 Microgrid Controller Architecture. The specific implemented microgrid controller system design, including architectural elements and industry standards, is shown below in Figure 16.

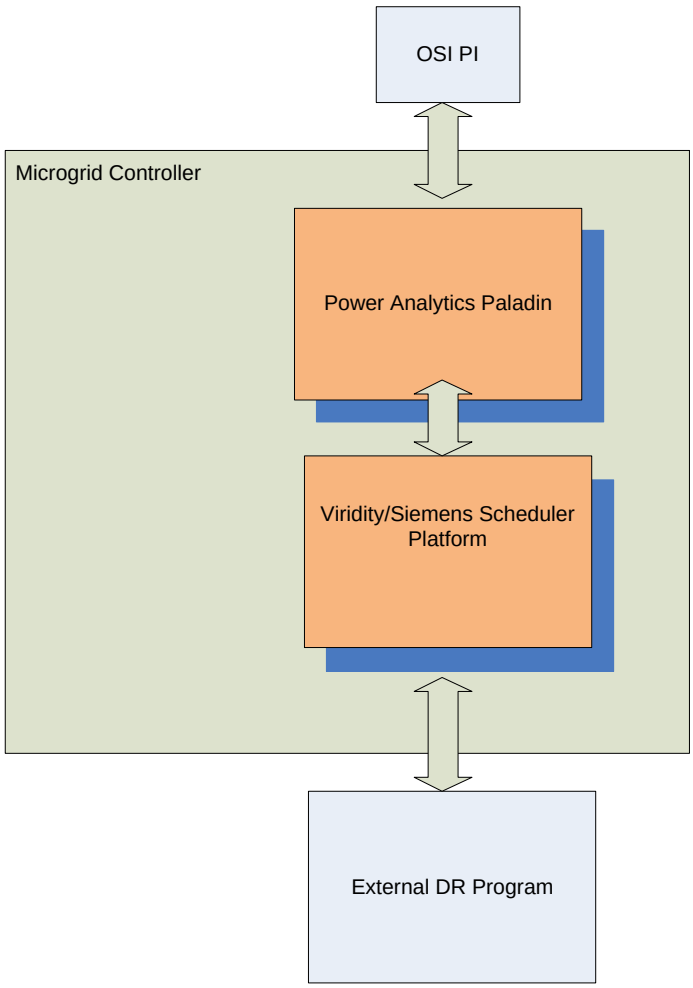

Figure 15 Microgrid Controller Architecture

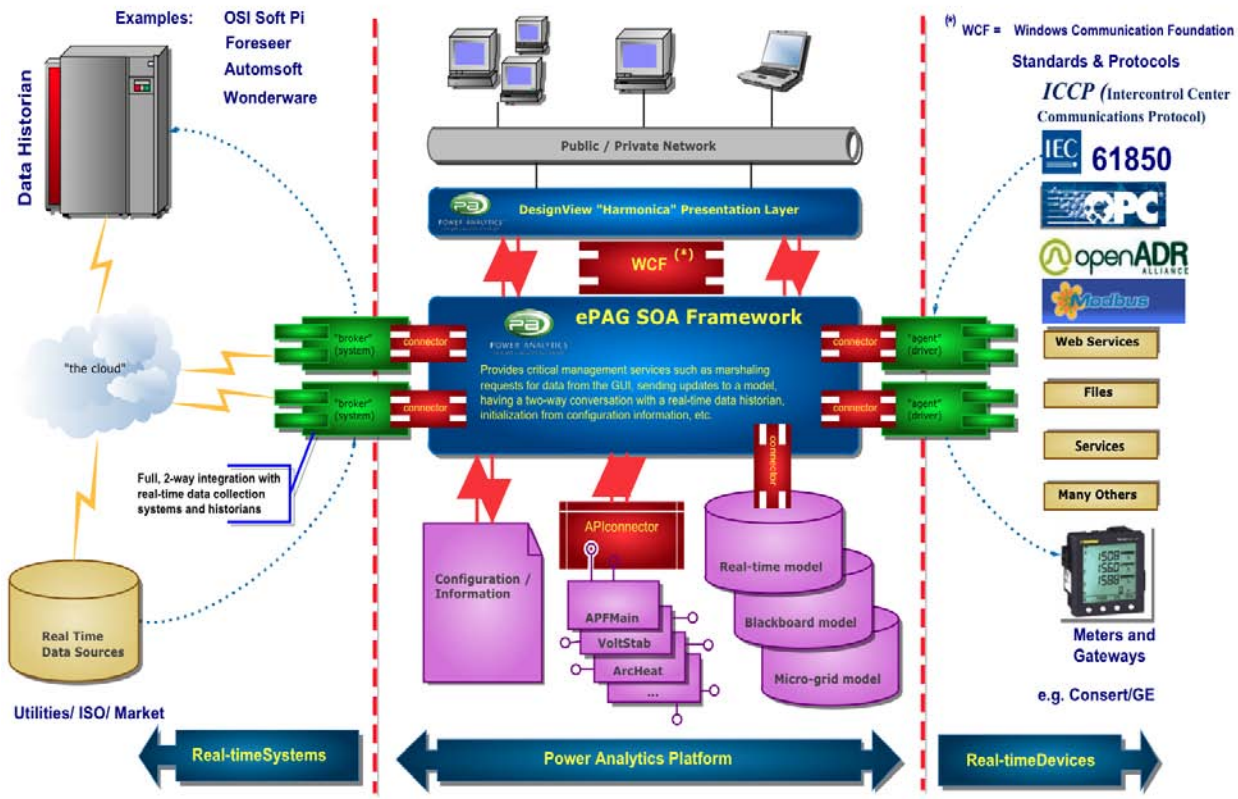

Figure 16 Microgrid Controller System Design

2.5. Develop Field Testing and Acceptance Methodology

Table 5 below shows the UCSD Microgrid system test objectives and requirements. The field test requirements were derived from the business and functional requirements which is the recognized system engineering best practice for defining test requirements. Again following system engineering best practices, requirements are mapped to test procedures. Table 6 shows the mapping for field test procedures (FTPs) to requirements.

Requirement	Detailed Requirement	Field Test Procedure (FTP)
1.0 Optimize Microgrid Operation	The microgrid controller shall optimize the utilization of resources under its control.	FTP 1. Manage Cost FTP 2. Manage Reliability
1.1 Balance Reliability and Cost Factors	The microgrid controller shall manage the optimization of resources to simultaneously support both cost and	FTP 1. Manage Cost FTP 2. Manage Reliability

Requirement	Detailed Requirement	Field Test Procedure (FTP)
	reliability goals.	
2.1 Manage Microgrid for Economic Benefit	The microgrid controller shall manage resources to minimize total operational costs of systems under its control.	FTP 1. Manage Cost
2.2 Manage Microgrid for Reliability	The microgrid controller shall manage resources to maximize system reliability as measured by the System Average Interruption Frequency Index (SAIFI)	FTP 2. Manage Reliability
3.1 Market Resources	The microgrid controller shall coordinate day-ahead scheduling with the SDG&E scheduler coordinator.	FTP 1. Manage Cost
3.2 Manage Demand	The microgrid controller shall manage demand through coordination with the EnerNOC DR program.	FTP 3.Manage Demand
3.2.1 Manage Demand Participation	The microgrid controller shall allow participation in all Demand Response events from EnreNOC.	FTP 3.Manage Demand
3.2.2 Manage Demand Automation	The microgrid controller shall automate signals from the Viridity Scheduler to adjust stored control settings up or down.	FTP 3.Manage Demand
3.3 Manage Storage	The microgrid controller shall manage storage.	FTP 3.Manage Demand FTP 4. Manage Supply
3.4 Manage Supply	The microgrid controller shall manage supply.	FTP 4. Manage Supply
3.5 Incorporate Renewables	The microgrid shall manage the use of renewable energy sources.	FTP 4. Manage Supply
4.1 Manage Thermal Storage	The microgrid controller shall manage thermal storage.	FTP 4. Manage Supply
4.2 Manage Electrical Storage	The microgrid controller shall electrical storage.	FTP 4. Manage Supply
4.3 Manage CCHP	The microgrid controller shall manage the Combined Cycle Heat and Power cogeneration plant. The CCHP uses a 3 MW steam generator to float the load.	FTP 4. Manage Supply
4.4 Manage Gen Sets	The microgrid controller shall manage the gen sets. Gen sets are used to provide additional power when needed.	FTP 4. Manage Supply
4.5 Manage PV	The microgrid shall manage photovoltaic solar production.	FTP 4. Manage Supply
4.6 Manage Fuel	The microgrid controller shall manage	FTP 4. Manage Supply

Requirement	Detailed Requirement	Field Test Procedure (FTP)
Cell	the fuel cell.	
4.7 Manage other DER	The microgrid controller shall manage Distributed Energy Resources.	FTP 4. Manage Supply

Table 5: Microgrid Requirements Mapped to Field Test Procedures

Field Test ID	Test Objective	Requirements verified
FTP 1. Manage Cost	Verify the microgrid controller can minimize economic costs.	1, 1.1, 2.1
FTP 2. Manage Reliability	Verify the microgrid controller can maintain system reliability.	1, 1.1, 2.2
FTP 3.Manage Demand	Verify the microgrid controller can manage user demand.	3.2 – 3.3
FTP 4. Manage Supply	Verify the microgrid controller can manage user demand.	3.3- 3.5, 4.1 – 4-7

Table 6: UCSD Microgrid System Test Objectives and Requirements

2.6. Recommend Market Significant Smart Appliances

Most appliance manufacturers have either begun selling Smart Appliances or will begin doing so in the near future; hence most appliance brand lines will include Smart Appliances. Currently smart refrigerators, washers and dryers, dishwashers, ovens and ranges are available.

Appliance manufacturers with existing or forthcoming Smart Appliances products include:

- GE
- Samsung
- LG
- Whirlpool
- Subzero
- Miele
- Bosch
- Panasonic
- Electrolux

The above manufacturers produce products for their own appliance lines and sell products under other brand names as well. Products from any major appliance manufacturer, including those listed above, would be valuable additions to UCSD's suite of controllable devices. Figure 17 shows examples of commercially available smart appliances.

Figure 17 Production Smart Appliances

In order to incorporate Smart Appliances into the UCSD microgrid, a communications path and application protocols will need to be established. In terms of future-proofing the microgrid solution, the various protocol options used for both the network communications and application-level interfaces should be considered. Figure 11 shows the path of the application and network level communications.

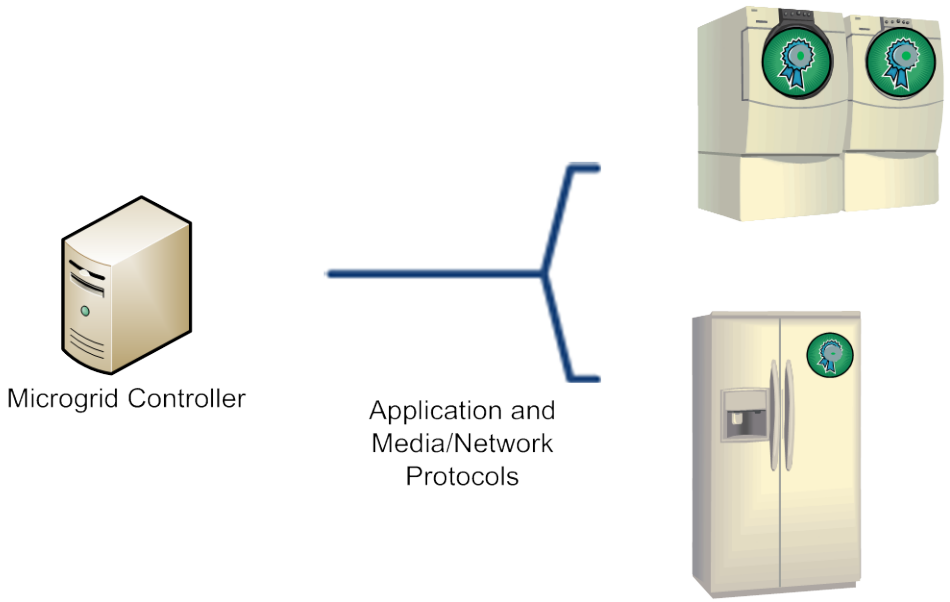

Figure 18 Multiple Microgrid Controller to Smart Appliance Application and Media/Network Protocol Options Exist

The Association of Home Appliance Manufacturers (AHAM) represents manufacturers of major, portable and floor care home appliances, as well as suppliers to the industry. AHAM membership includes over 150 appliance companies throughout the world. In the United States, AHAM members produce more than 95% of the household appliances shipped for sale within the United States. The Association of Home Appliance Manufacturers in its *Assessment of Communication Standards for Smart Appliances: The Home Appliance Industry's Technical Evaluation of Communication Protocols, October 2010* evaluated standards in terms of suitability for use with Smart Appliances. As representatives of more than 150 appliance companies producing 95% of all appliances sold in the United States, AHAM is well qualified to evaluate the requirements for smart appliances.

As described in the AHAM report, application and network communications standards were evaluated in terms of consumer driven system level requirements. Factors included in the AHAM study included safety, reliability, security, privacy, interoperability, ease of use and future-proofing of the protocols. Over 60 different protocols and protocol variants were evaluated.

Based on AHAM's assessment, the most relevant communications technologies were clearly separated from their peers for use in Smart Grid appliance applications. For the Application layer, Smart Energy Profile (SEP) 2.0 and Open Automated Demand Response (OpenADR) were the highest scoring protocols. Of the media and network layers evaluated, Wi-Fi, ZigBee,

and HomePlug Green PHY scored the highest. In considering the design of the microgrid communications link depicted in Figure 18 the use of these protocols is recommended. Smart Appliances are now supporting standard protocols including SEP 2.0 and Internet standard TCP and UDP interfaces.

2.6.1. Recommend wider demonstration opportunities for UCSD

Smart Appliances demonstration projects for the UCSD microgrid should take into account the unique characteristics of microgrids especially the ability to control a large number of appliances on the UCSD campus. Broadening UCSD's Smart Appliance demonstration opportunities thorough collaboration with organizations including utilities, appliance manufacturers and other potential industry collaborators is in progress.

Specifically, San Diego Gas and Electric (SDG&E) is developing the Beach Cities microgrid in Borrego Springs, California. The CEC-funded portion of the Beach Cities microgrid will support the integration of remote controlled demand response devices, such as thermostats, solar panels, plug-in hybrid electric vehicles (PHEVs) and grid-friendly appliances.

Collaboration efforts with the Beach Cities microgrid project are currently in progress.

2.7. Validate Concepts and Preliminary Decisions

2.7.1. Collaborate with researchers

UCSD researchers have collaborated with EnerNex, Power Analytics, and Viridity to develop the microgrid system design, architecture and implementation described in the preceding sections. UCSD collaboration with EnerNex, Viridity and Power Analytics has occurred at UCSD campus.

Collaboration between EnerNex and Power Analytics has occurred at UCSD, at the Power Analytics office in Rancho Bernardo, and at EnerNex headquarters in Knoxville, Tennessee.

The final design is implemented as shown in Figure 16 Microgrid Controller System Design. Field testing is described in Section 2.5.

2.7.2. Develop schedule for refreshing models

Models should be updated every 3 years and upon significant release of new standards from NIST SGIP.

2.7.3. Maintain Predictive Analytics, Software, Hardware and Data

All system software and hardware should be considered for refresh and updating on a 5 year cycle. Advanced hardware and software should also be considered for inclusion in the UCSD microgrid when industry partners wish to collaborate with UCSD on demonstration projects.

2.7.4. Provide document of overall system architecture and project specific system design

The UCSD Microgrid system architecture and design are specified in Section 2.4.2.

2.7.5. Provide final report with field testing and acceptance methodology that verifies system requirements

The Final Report contained here includes the field testing and acceptance methodology. See Section 2.5 for the microgrid controller field testing and acceptance methodology.

2.7.6. Validation of Steady-State Analysis

As part of this project, Power Analytics employed their PV models for a steady-state PV integration study on a typical distribution system using their Paladin DesignBase software application. Their stated intent was that this study would provide a systematic approach for a typical system study and to provide a method to determine whether PV configuration has a large impact to the system. The study performed by Power Analytics focused on a steady-state analysis of a radial distribution feeder, which was based on the IEEE 34 bus system, a wel documented distribution system [1] [2]. Power Analytics documented the results of this study in Appendix A of the report "Integration Study, Development of Planning Guideline, Determination of Acceptable Level of Penetration of PV System" [3].

To verify system requirements, EnerNex repeated selected parts of Power Analytics' integration study and conducted on the radial distribution feeder using a different software application, i.e., the Electromagnetic Transient Program EMTP-RV. Our intent was to compare the results of the previous study and our study in order to (1) verify the appropriateness of the PV model used in the Power Analytics study and (2) test if the results of Power Analytics steady-state analysis are independent of the software application (as they should be). Furthermore, we add to the background information already provided in the Power Analytics report by providing information on the purpose and significance of a steady-state analysis and discussing which issues can (and cannot) be addressed by performing an analysis in steady state using the DesignBase software.

2.7.6.1. *Significance of a Steady-State Analysis*

A steady-state analysis is a basic and fundamental study of any power systems. Two types of studies are commonly conducted in steady state: (1) a power flow (or load flow) study and (2) a steady-state short circuit study. Power flow studies are important for planning future expansion of power systems as well as in determining the best operation of existing systems. Each power system is supposed to be operated in this state unless some disturbances happen. Steady-state short-circuit studies are required in order to size electrical installation and the required equipment, as well as determining the means required for the protection of life and property during faults. For these studies, short-circuit currents must be calculated for every point in the network. It is important to note that a steady-state short circuit study does not capture the immediate response of the system during the fault, but rather yields the power-frequency fault currents after the disturbed systems has settled to steady state. The transient response of the system can be captured in a transient fault study, which requires more sophisticated models of the system components than the models that are typically used in a steady-state analysis. In a transient fault study, the system component, such as the generators and the power lines, must be capable of accurately reproducing the component behaviour during the first microseconds to milliseconds after a system disturbance.

2.7.6.2. *PV Model*

In steady state, the PV acts as a generator of active and reactive power. Consequently, one way to integrate PV generators into a system model is by using a negative PQ load, that is, the active power P and the reactive power Q are controlled so that they remain constant. On the other hand, the voltage and frequency are not regulated.

2.7.6.3. *Test Feeder Description*

In this section, the test feeder, which is used for the simulations, is described in detail. The feeder is the IEEE 34-bus test feeder and is a radial configured network, which is connected to an infinite bus. Figure 1 shows the schematic of the IEEE 34 Node Test Feeder. The network consists of 34 nodes, 32 lines, 2 transformers (one for substation), and several spot and distributed loads. The substation voltage level at the grid side is 69 kV and at the distribution side is 24.9 kV. The voltage level steps down to 4.16 kV after the feeder transformer. Therefore, the voltage level of the majority of feeder is 24.9 kV. Two tap changers are also provided to regulate the voltage level in the required cases.

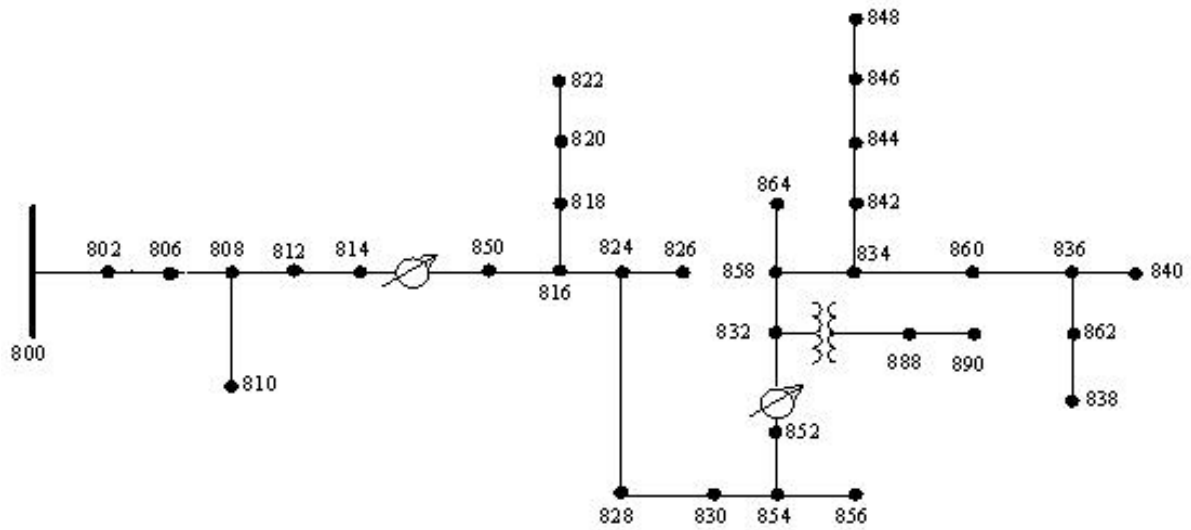

Figure 19: Original IEEE 34 Node Test Feeder model

The system used in the Power Analytics study is a modified version of the IEEE 34 bus test feeder described in [1] [2]. The IEEE 34 bus system is a radial configured network, which is connected to an infinite bus. Figure 1 shows the schematic of the IEEE 34 bus test feeder. The network consists of 34 nodes, 32 lines, 2 transformers (one for substation), and several spot and distributed loads. The substation voltage level at the grid side is 69 kV and at the distribution side is 24.9 kV. The voltage level steps down to 4.16 kV after the feeder transformer. Two tap changers are also provided to regulate the voltage levels.

Power Analytics modified this system by removing capacitors, distributed loads, tap-changers, and line charging capacitances. Figure 2 shows the schematic of the test feeder in DesignBase. In this feeder, three locations are selected for placement of the PV units. One location is close to the substation, one is far from substation, and one is midway between the substation and the end of the feeder. The PV units are connected to the feeder via 24.9/0.48 kV transformers. Two additional loads were added to the PV buses.

The provided network is replicated in the EMTP-RV software. Figure 3 shows the schematic of the test feeder in the EMTP-RV. The network model in EMTP-RV is set up identically to the DesignBase model. Table 1 provides the test feeder's line data which is used in both the DesignBase and EMTP-RV models. The original test feeder has 6 spot loads. The DesignBase and EMTP-RV models have two additional loads placed at buses PVBUS1 and PVBUS2. Table 2 shows the complete load data in the network. As it is evident from the table, the extra loads increase the active power consumption of the network from 344 to 1144 kW, and reactive power consumption of the system from 224 to 524 kVAr. The original IEEE 34 bust test feeder contains

two transformers; one at the substation (SUBSTA) and another one at one of the end branches (XFM-1). The modified network contains these two original transformers and three additional ones at the points where PV units are connected to the feeder. Table 3 shows the transformers data for all transformer units employed in the system.

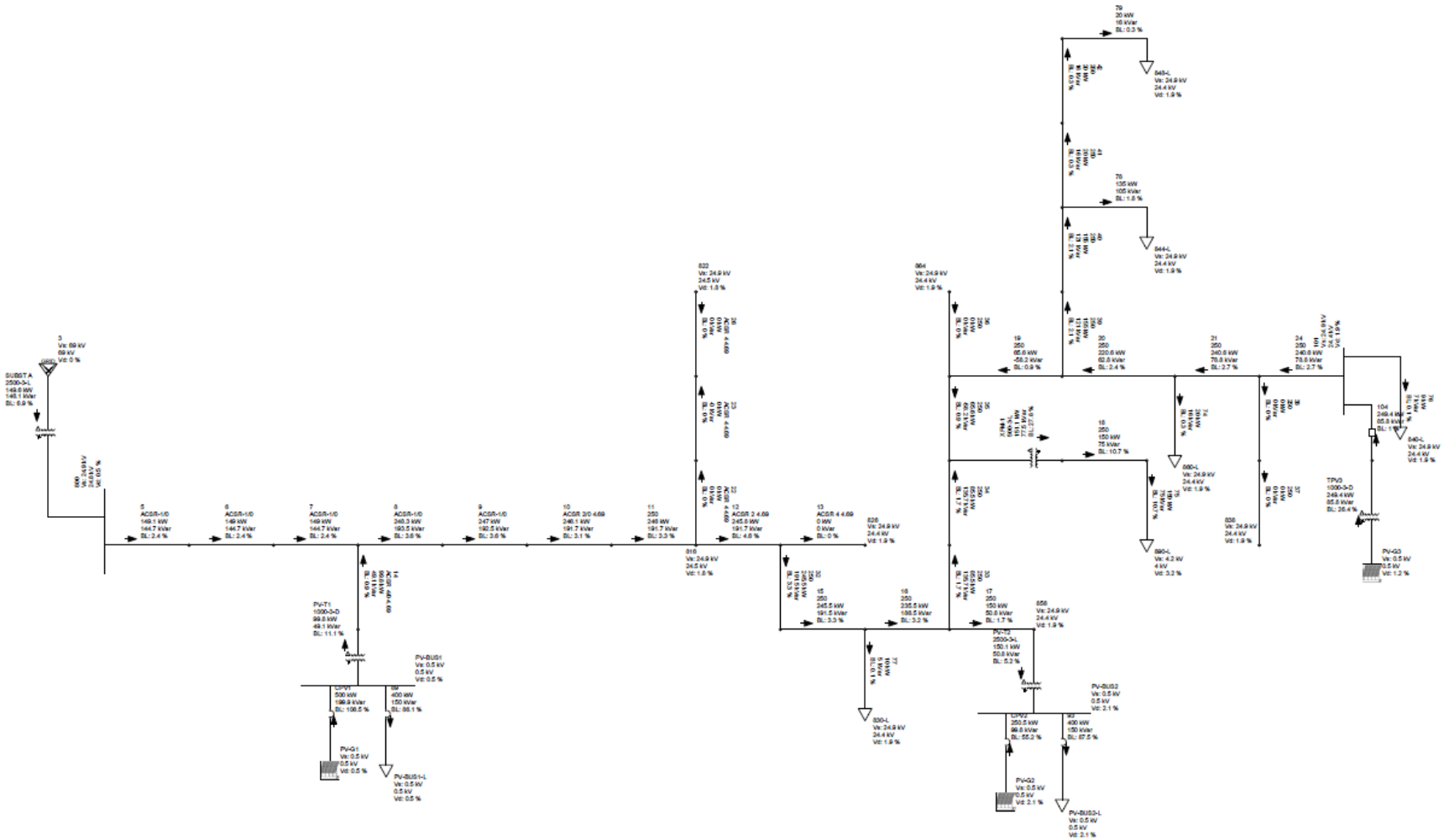

Figure 20: Schematic of test feeder model, Power Analytics DesignBase.

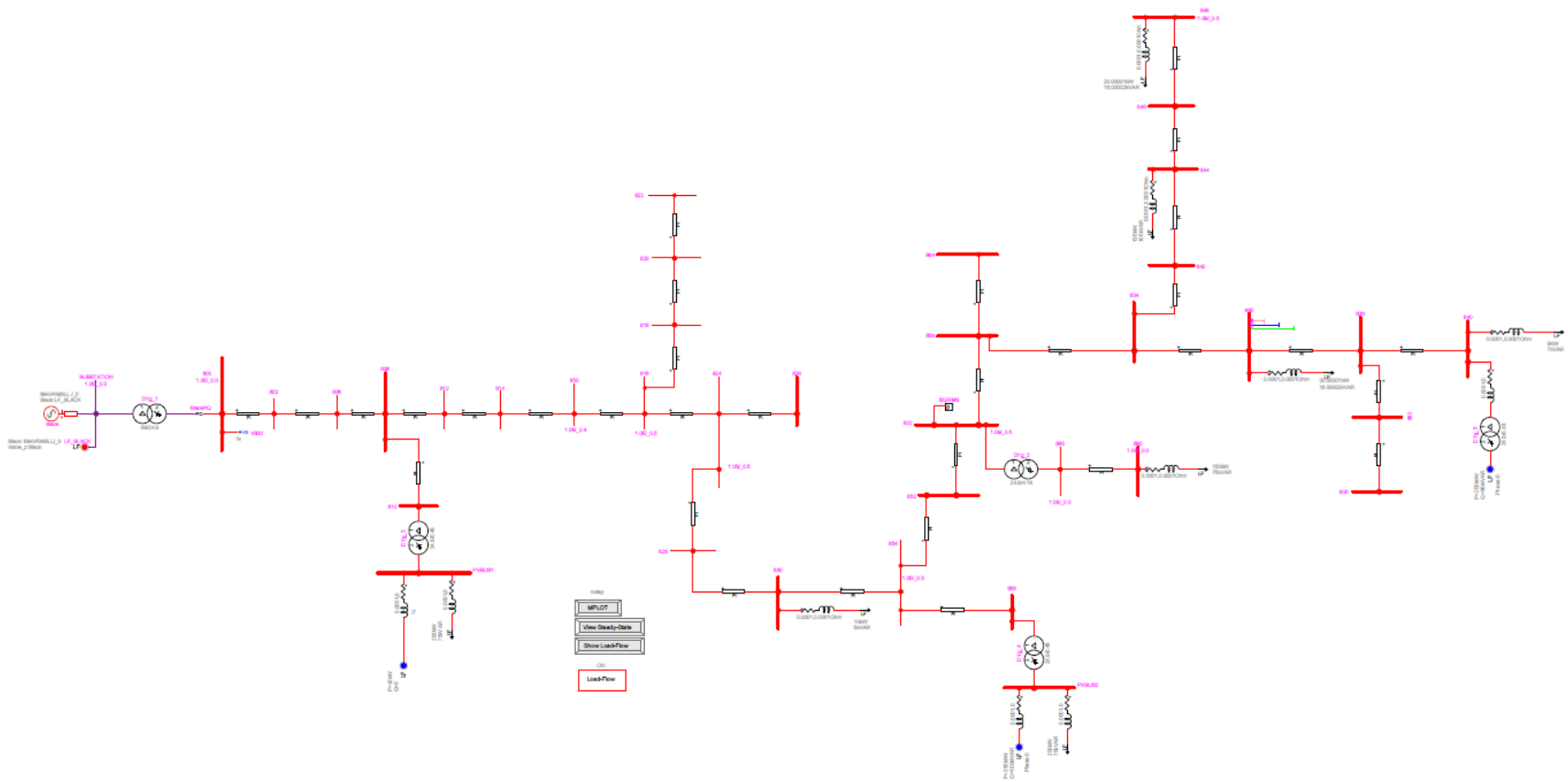

Figure 21: Schematic of test feeder model, EMTP-RV.

Table 7: Line data of test feeder.

Branch Name	Node A	Node B	Length(ft.)	R (Ohms)	X (Ohms)
5	800	802	2580	0.5438	0.4076
6	802	806	1730	0.3647	0.2733
7	806	808	32230	6.7939	5.0923
14	808	810	5804	0.6283	0.8433
8	808	812	37500	7.9048	5.925
9	812	814	29730	6.2669	4.6973
10	814	850	10	0.0016	0.0016
22	816	818	1710	0.8041	0.2736
12	816	824	10210	3.158	1.6459
23	818	820	48150	22.6405	7.704
26	820	822	13740	6.4607	2.1984
13	824	826	3030	1.4247	0.4848
32	824	828	100	0.0046	0.0034
15	828	830	100	0.0046	0.0034
16	830	854	100	0.0046	0.0034
35	832	858	100	0.0046	0.0034
20	834	860	100	0.0046	0.0034
39	834	842	100	0.0046	0.0034
24	836	840	100	0.0046	0.0034
38	836	862	100	0.0046	0.0034
40	842	844	100	0.0046	0.0034
41	844	846	100	0.0046	0.0034
42	846	848	100	0.0046	0.0034
11	850	816	100	0.0046	0.0034
34	852	832	100	0.0046	0.0034
17	854	856	100	0.0046	0.0034
33	854	852	100	0.0046	0.0034
36	858	864	100	0.0046	0.0034
19	858	834	100	0.0046	0.0034
21	860	836	100	0.0046	0.0034
37	862	838	100	0.0046	0.0034
18	888	890	100	0.0046	0.0034
77	830	L 830	0	0.0001	0.0001
76	840	L 840	0	0.0001	0.0001
78	844	L 844	0	0.0001	0.0001
79	848	L 848	0	0.0001	0.0001
74	860	L 860	0	0.0001	0.0001
75	890	L 890	0	0.0001	0.0001

Table 8: Load data of test feeder.

Node	Load Model	P (kW)	Q (KVAr)
860	Y-PQ	20	16
840	Y-I	9	7
844	Y-Z	135	105
848	D-PQ	20	16
890	D-I	150	75
830	D-Z	10	5
PVBUS1		400	150
PVBUS2		400	150
Total		1144	524

Table 9: 34 Transformer data of test feeder.

Branch Name	Type	R (%)	X (%)
PV-T1	2-W XFMR	0.8000	5.6900
PV-T2	2-W XFMR	0.8100	5.6800
SUBST A	2-W XFMR	1.0000	8.0000
TPV3	2-W XFMR	0.8000	5.6900
XFM-1	2-W XFMR	1.9000	4.0800

2.7.6.4. *Test Feeder Verification*

In order to ensure consistency of the test system used in EMTP-RV and DesignBase, a load flow analysis of the feeder system without the inclusion of PV and without the additional loads at the PV buses was conducted in both programs. Table 4 shows the complete results of the load flow analysis conducted in DesignBase. Table 5 and Table 6 show a comparison of the voltages and powers, respectively, calculated in DesignBase and EMTP-RV. The percentage deviations in voltage magnitude at the load buses never exceed 0.002%. The percentage deviations in the generated active and reactive power between DesignBase and EMTP-RV never exceed 0.012%. In conclusion, the EMTP-RV model and the DesignBase model produce essentially identical results. This shows that the system models are suitable test beds for the analysis conducted in the following sections, which includes the PV generator models, and any deviation would be attributable to the different PV generator models used in DesignBase and EMTP-RV (and not due to the system they are connected to).

Table 10: Load flow results from EnerNex DesignBase simulations for some selected nodes in the network without considering PV and extra loads

Bus Name	Type	Voltage [V]	Drop [%]	Ang [Deg]	P [W]	Q [VAr]	PF [%]

3	Swing	69000	0.00	0.0	353170	237554	83
101	Busbar	24150	3.01	-0.7	8998	6999	79
800	Busbar	24677	0.99	-0.6	352060	231757	84
816	None	24211	2.77	-0.7	345274	226971	84
822	None	24211	2.77	-0.7	0	0	
826	None	24150	3.01	-0.7	0	0	
830-L	P_Load	24150	3.01	-0.7	-10000	-5000	89
838	None	24150	3.01	-0.7	0	0	
840-L	P_Load	24150	3.01	-0.7	-9000	-7000	79
844-L	P_Load	24150	3.01	-0.7	-135000	-105000	79
848-L	P_Load	24150	3.01	-0.7	-200000	-16000	78
856	None	24150	3.01	-0.7	0	0	
860-L	P_Load	24150	3.01	-0.7	-20000	-16000	78
864	None	24150	3.01	-0.7	0	0	
890-L	P_Load	3983	4.26	-1.2	-150000	-75000	89

Table 11: Comparison of load flow results between EnerNex DesignBase simulations and EnerNex EMTP-RV simulations

Bus name	Voltage magnitude in EMTP-RV [V]	Voltage magnitude in DesignBase [V]	Deviation magnitude [V]	Deviation percentage [%]
830-L	24149	24149	0.4	0.002
840-L	24149	24149	0.4	0.002
844-L	24149	24149	0.4	0.002
848-L	24149	24149	0.4	0.002
860-L	24149	24149	0.4	0.002
890-L	3983	3983	0.08	0.002

Table 12: Comparison of generation and consumption results between EnerNex DesignBase simulations and EnerNex EMTP-RV simulations

	Power in EMTP-RV [W/VAr]	Power in DesignBase [W/VAr]	Deviation power [W/VAr]	Deviation percentage [%]
Total active power generation	353225	353170	26	0.007
Total active power consumption	344000	344000	0	0
Total reactive power generation	237589	237554	29	0.012
Total reactive power consumption	224000	224000	0	0

2.7.6.5. *Load Flow Analysis*

In this section, we present and compare the results from load flow studies obtained from

1) DesignBase simulations conducted by Power Analytics and documented in [3],
2) DesignBase simulations conducted by EnerNex, and
3) EMTP-RV simulations conducted by EnerNex.

2.7.6.6. *Presentation of Load Flow Results*

In this section, we present the results from load flow studies conducted for the scenario in which 30% of the power in the IEEE 34 bus test system is produced by PV with the PV either located near the substation or at the end of the feeder. 30% PV penetration, PV near substation

The load flow results for the 30% PV penetration scenario with the PV placed close to the substation are documented here. Table 7 shows active power and the reactive power supplied by the grid and PV, consumed by the load, and lost in the system for six different daytime hours. The results in the table are illustrated in Figure 4, Figure 5, and Figure 6. Figure 4 shows the active power supplied by the grid, consumed by the load, and supplied by the PV. The figure shows that with increased PV generation at midday the power supplied by the grid is reduced. Figure 5 illustrates the reactive power generation/load balance. The PV generators do not produce reactive power and consequently the reactive power consumed by the load is supplied completely by the grid. Figure 6 illustrates the active and reactive losses in the system. The losses are smallest at the hours when PV generation is at maximum.

Table 8 shows the voltages at six different locations in the system for six different daytime hours. The results in the table are illustrated in Figure 7. The table and the figure show that the voltage on the feeder are within the range of 0.94 to 0.97 pu.

Table 13: Active and reactive powers supplied by the grid and PV, consumed by the load, and lost in the system at six different daytime hours. 30% PV penetration near substation. Results from the Power Analytics report, DesignBase simulations conducted by EnerNex, and EMTP-RV simulations conducted by EnerNex.

30% Near	Actual time	Grid Supply		PV Generation		System Load		System Losses	
		Active Power [kW]	Reactive Power [kVAr]	Active Power [kW]	Reactive Power [kVAr]	Active Power [kW]	Reactive Power [kVAr]	Active Power [kW]	Reactive Power [kVAr]
Results from Power Analytics Report	8:00 AM	751	419	19	0	744	374	26	45
	10:00 AM	731	417	39	0	744	374	25	44
	12:00 PM	571	407	195	0	744	374	22	33
	2:00 PM	584	407	182	0	744	374	22	34
	4:00 PM	634	403	123	0	744	374	22	36
	6:00 PM	744	419	25	0	744	374	26	45
Results from EnerNex DesignBase Simulations	8:00 AM	751	419	19	0	744	374	26	45
	10:00 AM	730	418	39	0	744	374	25	44
	12:00 PM	571	407	195	0	744	374	22	33
	2:00 PM	584	408	182	0	744	374	22	34
	4:00 PM	644	411	123	0	744	374	23	37
	6:00 PM	745	419	25	0	744	374	26	45
Results from EnerNex EMTP-RV Simulations	8:00 AM	752	420	19	0	744	374	27	46
	10:00 AM	731	418	39	0	744	374	26	44
	12:00 PM	571	408	195	0	744	374	22	34
	2:00 PM	585	408	182	0	744	374	23	34
	4:00 PM	645	412	123	0	744	374	24	38
	6:00 PM	746	419	25	0	744	374	27	45

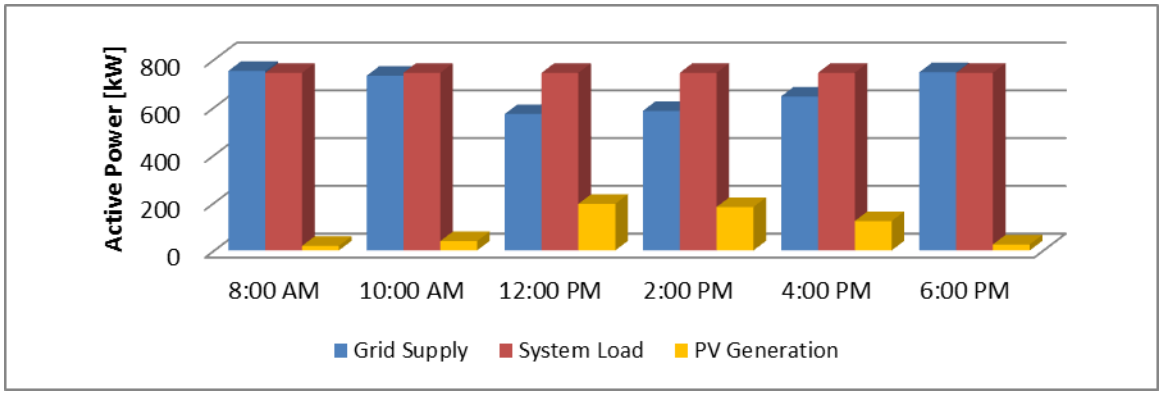

Figure 22: Active Power supplied by the grid, consumed by the loads in the system, and supplied by the PV generators. 30% PV penetration near substation. Results from EMTP-RV simulation.

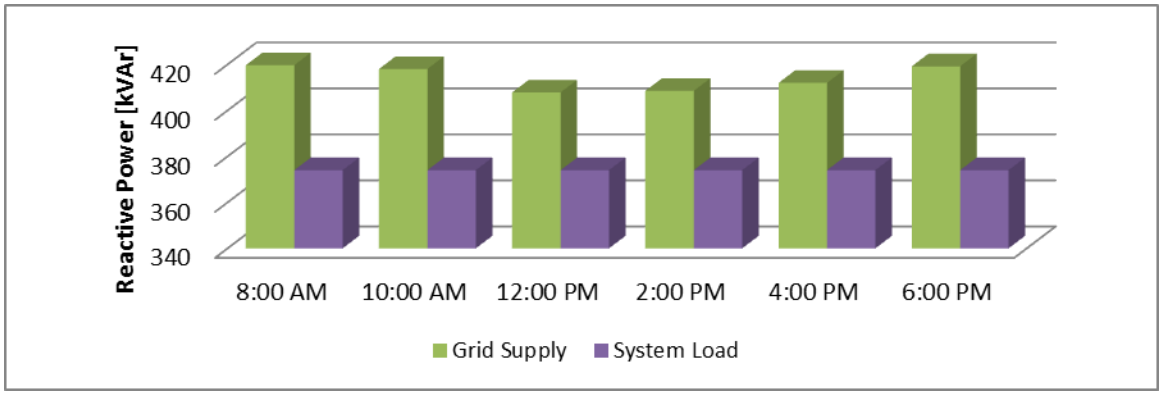

Figure 23: Reactive Power supplied by the grid and consumed by the loads in the system. 30% PV penetration near substation. Results from EMTP-RV simulation.

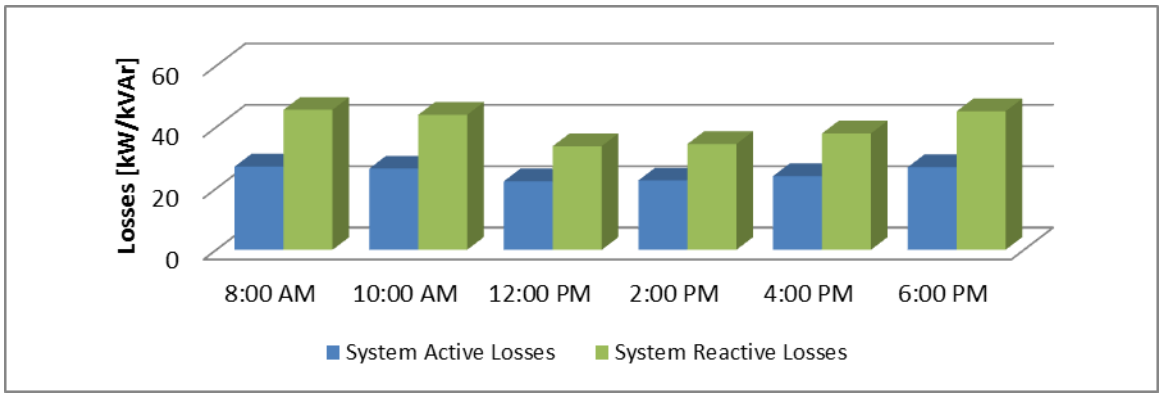

Figure 24: Active and reactive losses in the system. 30% PV penetration near substation. Results from EMTP-RV simulation.

Table 14: Voltage magnitudes at six different locations in the system and at six different daytime hours. 30% PV penetration near substation. Results from DesignBase and EMTP-RV simulations.

Actual Time			8:00 AM	10:00 AM	12:00 PM	2:00 PM	4:00 PM	6:00 PM
Results from EnerNex DesignBase Simulations	830-L	[V]	23611	23621	23696	23690	23662	23614
		[p.u.]	0.95	0.95	0.95	0.95	0.95	0.95
	840-L	[V]	23610	23620	23695	23689	23661	23613
		[p.u.]	0.95	0.95	0.95	0.95	0.95	0.95
	844-L	[V]	23610	23620	23695	23689	23661	23613
		[p.u.]	0.95	0.95	0.95	0.95	0.95	0.95
	860-L	[V]	23610	23620	23695	23689	23661	23613
		[p.u.]	0.95	0.95	0.95	0.95	0.95	0.95
	PV-BUS-1	[V]	463	463	465	465	464	463
		[p.u.]	0.96	0.96	0.97	0.97	0.97	0.96
	PV-BUS-2	[V]	454	454	456	455	455	454
		[p.u.]	0.95	0.95	0.95	0.95	0.95	0.95
Results from EnerNex EMTP-RV Simulations	830-L	[V]	23609	23619	23693	23687	23660	23612
		[p.u.]	0.95	0.95	0.95	0.95	0.95	0.95
	840-L	[V]	23609	23618	23693	23687	23659	23612
		[p.u.]	0.95	0.95	0.95	0.95	0.95	0.95
	844-L	[V]	23608	23618	23693	23687	23659	23611
		[p.u.]	0.95	0.95	0.95	0.95	0.95	0.95
	860-L	[V]	23609	23618	23693	23687	23659	23612
		[p.u.]	0.95	0.95	0.95	0.95	0.95	0.95
	PV-BUS-1	[V]	463	463	466	466	465	463
		[p.u.]	0.96	0.96	0.97	0.97	0.97	0.96
	PV-BUS-2	[V]	452	452	454	453	453	452
		[p.u.]	0.94	0.94	0.94	0.94	0.94	0.94

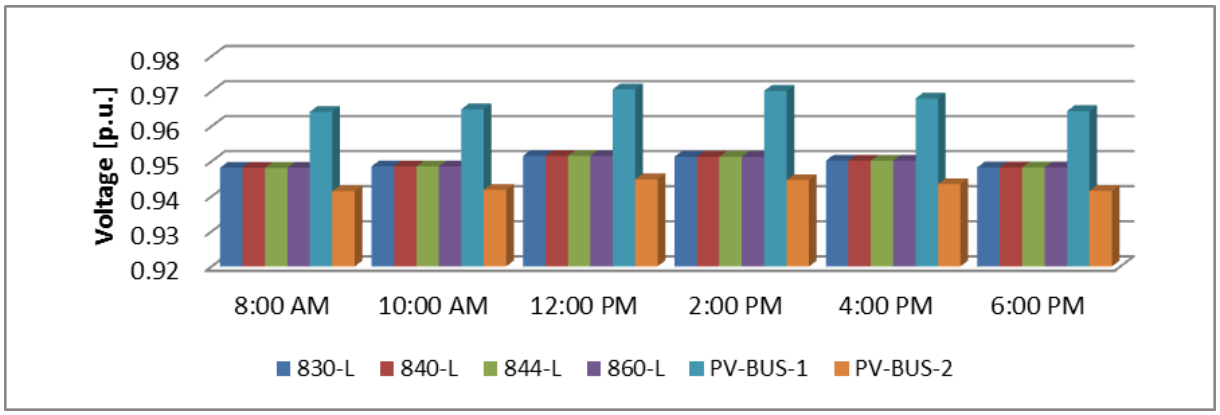

Figure 25: EMTP-RV voltages at six buses in the system. 30% PV penetration near substation.

2.7.6.7. *30% PV penetration – PV at the end of the feeder*

The load flow results for the 30% PV penetration scenario with the PV placed near the end of the feeder are documented here. Table 9 shows active power and the reactive power supplied by the grid and PV, consumed by the load, and lost in the system for six different daytime hours. The results in the table are illustrated in Figure 8, Figure 9, and Figure 10. Figure 8 shows the active power supplied by the grid, consumed by the load, and supplied by the PV. The figure shows that with increased PV generation at midday the power supplied by the grid is reduced. Figure 9 illustrates the reactive power generation/load balance. The PV generators do not produce reactive power and consequently the reactive power consumed by the load is supplied completely by the grid. Figure 10 illustrates the active and reactive losses in the system. The losses are smallest at the hours when PV generation is at maximum. Table 10 shows the voltages at six different locations in the system for six different daytime hours. The results in the table are illustrated in Figure 11. The table and the figure show that the voltage on the feeder are within the range of 0.94 to 0.97 pu.

Table 15: Active and reactive powers supplied by the grid and PV, consumed by the load, and lost in the system at six different daytime hours. 30% PV penetration at feeder end. Results from the Power Analytics report, and DesignBase and EMTP-RV simulations conducted by EnerNex.

		Grid Supply		PV Generation		System Load		System Losses	
30% Far	Actual time	Active Power [kW]	Reactive Power [kVAr]	Active Power [kW]	Reactive Power [kVAr]	Active Power [kW]	Reactive Power [kVAr]	Active Power [kW]	Reactive Power [kVAr]
Results from Power Analytics Report	8:00 AM	751	419	19	0	744	374	26	45
	10:00 AM	729	417	39	0	744	374	24	44
	12:00 PM	566	407	195	0	744	374	17	34
	2:00 PM	579	408	182	0	744	374	17	34
	4:00 PM	631	403	123	0	744	374	19	36
	6:00 PM	744	418	25	0	744	374	25	45
Results from EnerNex DesignBase Simulations	8:00 AM	750	419	19	0	744	374	25	45
	10:00 AM	729	418	39	0	744	374	24	44
	12:00 PM	566	408	195	0	744	374	17	34
	2:00 PM	579	408	182	0	744	374	17	34
	4:00 PM	641	411	123	0	744	374	20	37
	6:00 PM	744	419	25	0	744	374	25	45
Results from EnerNex EMTP-RV Simulations	8:00 AM	752	419	19	0	744	374	27	45
	10:00 AM	730	418	39	0	744	374	25	44
	12:00 PM	567	407	195	0	744	374	18	33
	2:00 PM	581	408	182	0	744	374	19	34

4:00 PM	642	411	123	0	744	374	21	37
6:00 PM	745	419	25	0	744	374	26	45

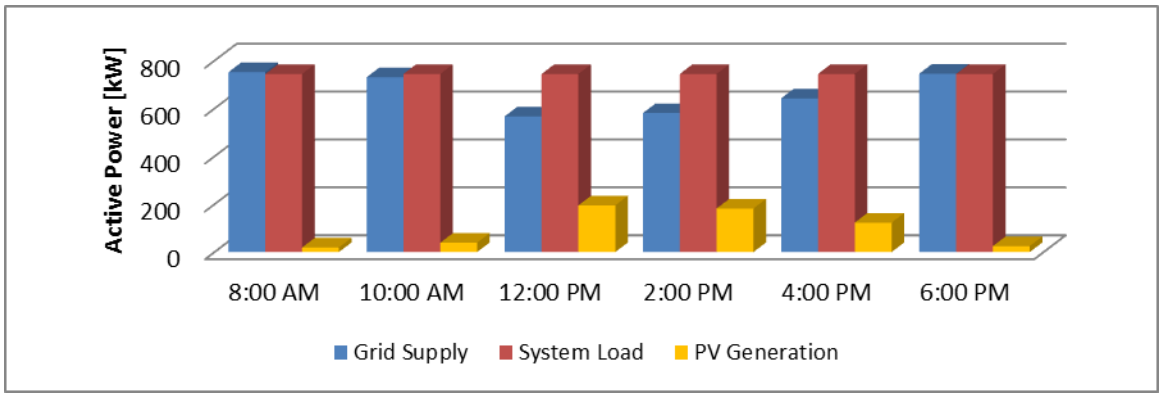

Figure 26: Active Power supplied by the grid, consumed by the loads in the system, and supplied by the PV generators. 30% PV penetration at feeder end. Results from EMTP-RV simulation.

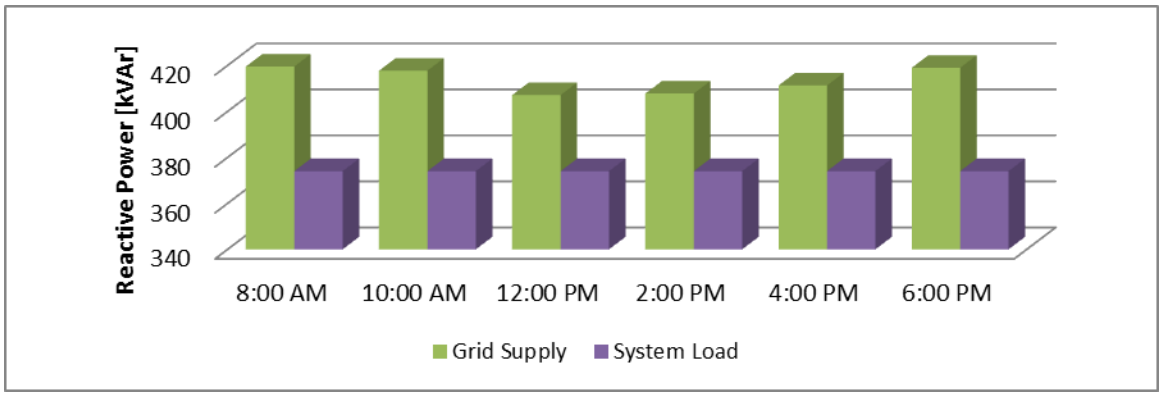

Figure 27: Reactive Power supplied by the grid and consumed by the loads in the system. 30% PV penetration at feeder end. Results from EMTP-RV simulation.

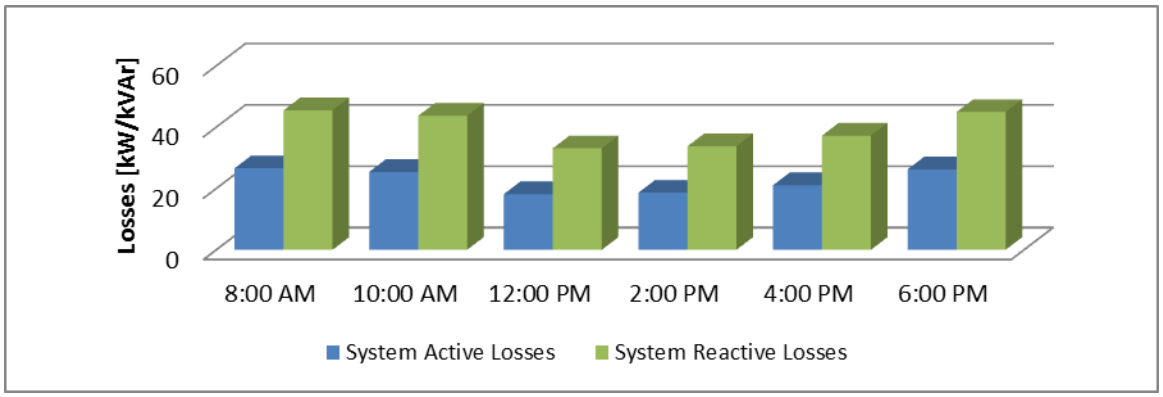

Figure 28: Active and reactive losses in the system. 30% PV penetration at feeder end. Results from EMTP-RV simulation.

Table 16: Voltage magnitudes at six different locations in the system and at six different daytime hours. 30% PV penetration at feeder end. Results from DesignBase and EMTP-RV simulations.

Actual Time			8:00 AM	10:00 AM	12:00 PM	2:00 PM	4:00 PM	6:00 PM
Results from EnerNex DesignBase Simulations	830-L	[V]	23625	23651	23841	23825	23754	23633
		[p.u.]	0.95	0.95	0.96	0.96	0.95	0.95
	840-L	[V]	23625	23650	23840	23825	23754	23633
		[p.u.]	0.95	0.95	0.96	0.96	0.95	0.95
	844-L	[V]	23625	23650	23840	23825	23754	23632
		[p.u.]	0.95	0.95	0.96	0.96	0.95	0.95
	860-L	[V]	23625	23650	23840	23825	23754	23633
		[p.u.]	0.95	0.95	0.96	0.96	0.95	0.95
	PV-BUS-1	[V]	463	463	464	464	464	463
		[p.u.]	0.96	0.96	0.97	0.97	0.97	0.96
	PV-BUS-2	[V]	454	455	458	458	457	454
		[p.u.]	0.95	0.95	0.95	0.95	0.95	0.95
Results from EnerNex EMTP-RV Simulations	830-L	[V]	23624	23649	23840	23824	23753	23631
		[p.u.]	0.95	0.95	0.96	0.96	0.95	0.95
	840-L	[V]	23623	23649	23840	23824	23753	23631
		[p.u.]	0.95	0.95	0.96	0.96	0.95	0.95
	844-L	[V]	23623	23648	23839	23824	23753	23631
		[p.u.]	0.95	0.95	0.96	0.96	0.95	0.95
	860-L	[V]	23623	23649	23840	23824	23753	23631
		[p.u.]	0.95	0.95	0.96	0.96	0.95	0.95
	PV-BUS-1	[V]	463	463	464	464	464	463
		[p.u.]	0.96	0.96	0.97	0.97	0.97	0.96
	PV-BUS-2	[V]	452	453	456	456	455	452
		[p.u.]	0.94	0.94	0.95	0.95	0.95	0.94

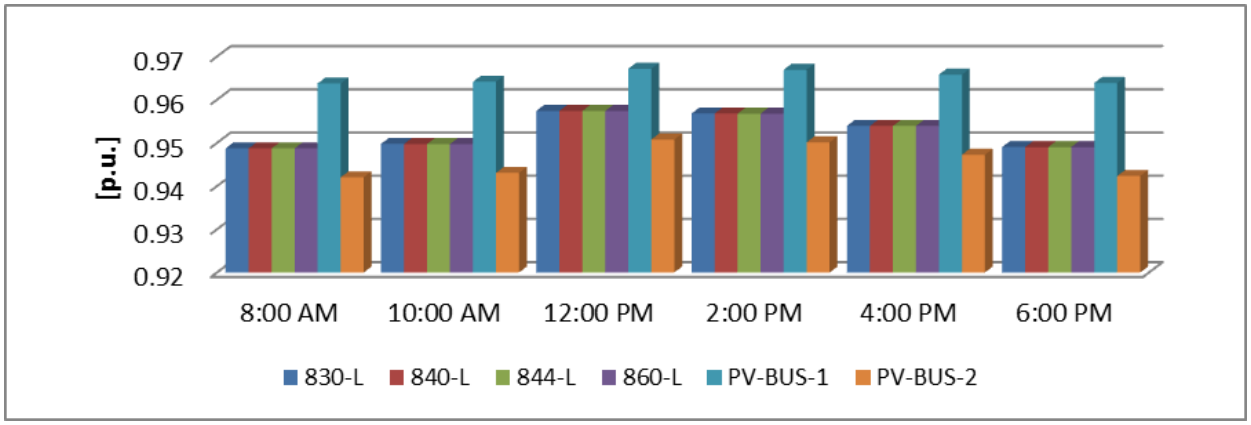

Figure 29: Voltage at six buses in the system. 30% PV penetration at feeder end. Results from EMTP-RV simulation.

2.7.6.8. *Comparison of Load Flow Results*

In this section, we directly compare the load flow results from the three different simulations, that is, (1) the DesignBase simulations conducted by Power Analytics and documented in [1], (2) the DesignBase simulations conducted by EnerNex, and (3) EMTP-RV simulations conducted by EnerNex. The comparison is only conducted for one point in time, that is, 12 pm. Five different PV penetration scenarios were considered – 10%, 20%, 30%, 40%, and 50%. Two locations for the PV generators were considered – near the substation (designated in the tables and figures by 'near') and at the end of the feeder (designated in the tables and figures by 'far').

Figure 12 and Figure 13 illustrate the results in the table for the supplied active power and reactive power, respectively. The figures show that the results from the three simulations are very similar. In order, to quantify this similarity, we selected the EMTP-RV simulation results as a reference and calculated the percentage difference between these reference results and the results from the other two simulations. The results of these calculations are listed in Table 12 and illustrated in Figure 14 and Figure 15. The table and the figures show that the percentage difference between the model-predicted active/reactive powers never exceeds 0.46%.

Similarly, we compare the voltages at one location in the system, bus 830, from the three simulations. Table 13 lists the numerical results and Figure 16 illustrates them. Again, using the EMTP-RV results as the reference and calculating the percentage differences between the reference results and the results from the other two simulations yields the values displayed in Table 14 and illustrated in Figure 17. The table and the figure show that the percentage difference between the model-predicted active/reactive powers never exceeds 0.05%.

Table 17: Comparison of active/reactive power results for all PV penetration scenarios at 12pm.

	System Active Power			System Reactive Power		
	Report [kW]	DesignBase [kW]	EMTP-RV [kW]	Report [kVAr]	DesignBase [kVAr]	EMTP-RV [kVAr]
10% Near	704.00	703.69	704.66	415.00	415.40	415.99
10% Far	(N/A)	701.78	702.97	(N/A)	415.41	415.52
20% Near	637.00	636.99	637.85	411.00	410.67	411.50
20% Far	634.00	633.49	634.76	411.00	410.94	410.80
30% Near	571.00	570.55	571.37	407.00	406.90	407.81
30% Far	566.00	565.74	567.17	407.00	407.65	407.09
40% Near	505.00	504.35	505.20	404.00	404.05	404.89
40% Far	499.00	498.52	500.18	405.00	405.50	404.37
50% Near	(N/A)	438.40	439.34	(N/A)	402.13	402.73
50% Far	432.00	431.83	433.77	404.00	404.47	402.60

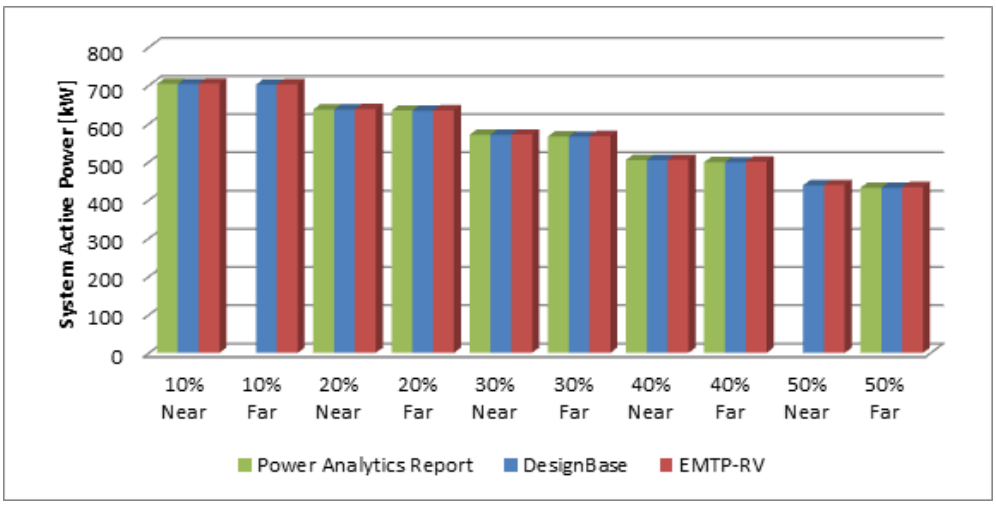

Figure 30: Comparison of active power results for all PV penetration scenarios at 12 p.m.

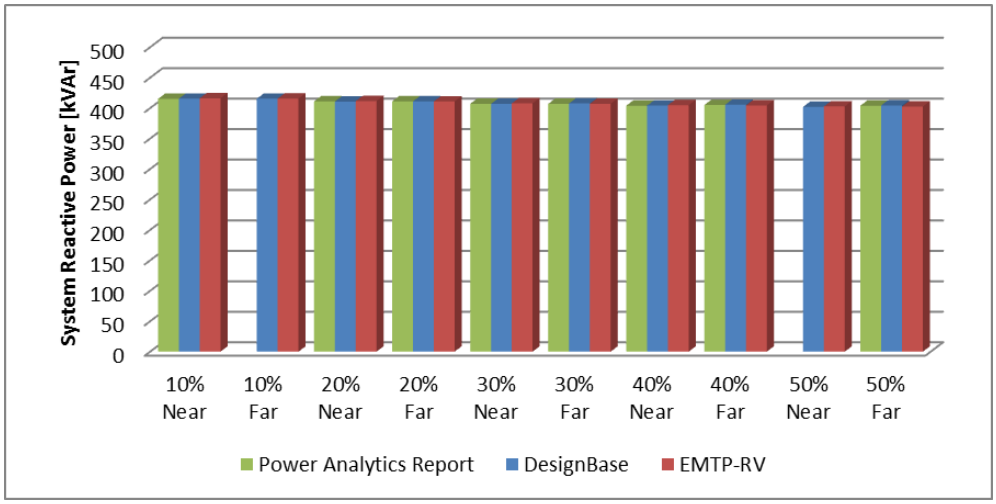

Figure 31: Comparison of reactive power results for all PV penetration scenarios at 12 p.m.

Table 18: Percentage difference of active/reactive powers relative to EMTP-RV results.

	System Active Power		System Reactive Power	
	Report [%]	DesignBase [%]	Report [%]	DesignBase [%]
10% Near	0.09	0.14	0.24	0.14
10% Far	(N/A)	0.17	(N/A)	0.03
20% Near	0.13	0.13	0.12	0.20
20% Far	0.12	0.20	-0.05	-0.04
30% Near	0.06	0.14	0.20	0.22
30% Far	0.21	0.25	0.02	-0.14
40% Near	0.04	0.17	0.22	0.21
40% Far	0.24	0.33	-0.16	-0.28
50% Near	(N/A)	0.22	(N/A)	0.15
50% Far	0.41	0.45	-0.35	-0.46

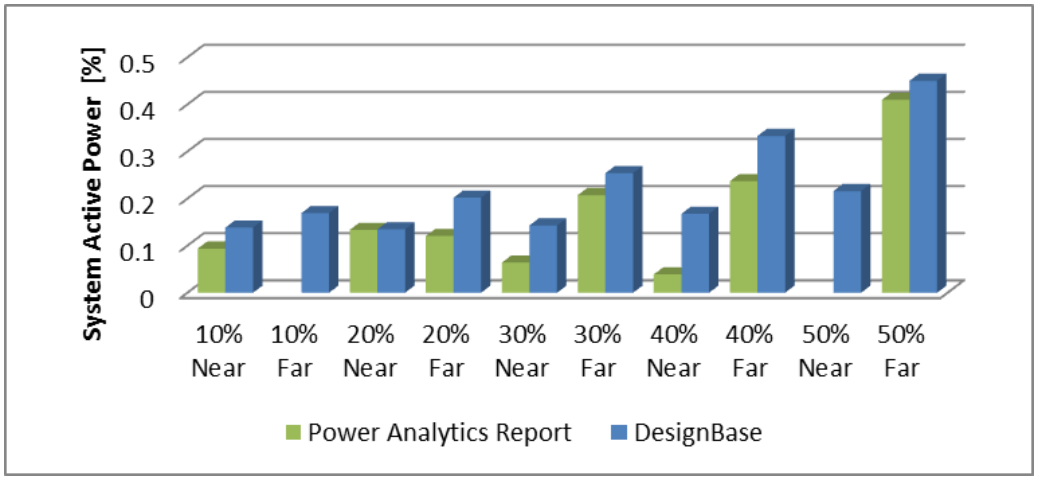

Figure 32: Illustration of percentage difference of active powers relative to EMTP-RV results.

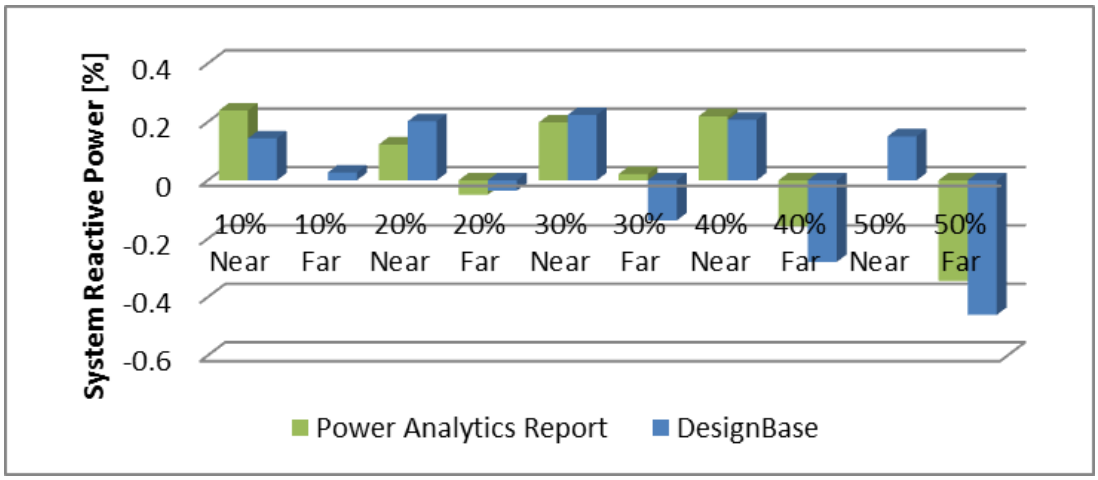

Figure 33: Illustration of percentage difference of reactive powers relative to EMTP-RV results.

Table 19: Comparison of voltage magnitude results at bus 830 from Power Analytics Report, EnerNex DesignBase simulations, and EnerNex EMTP-RV simulations for all scenarios at 12 p.m.

	Report [p.u.]	DesignBase [p.u.]	EMTP-RV [p.u.]
10% Near	0.949	0.949	0.949
10% Far	0.951	0.951	0.951
20% Near	(N/A)	0.950	0.950
20% Far	(N/A)	0.954	0.954
30% Near	(N/A)	0.952	0.952
30% Far	(N/A)	0.957	0.957
40% Near	(N/A)	0.953	0.953
40% Far	(N/A)	0.960	0.960
50% Near	0.954	0.954	0.954
50% Far	0.963	0.963	0.963

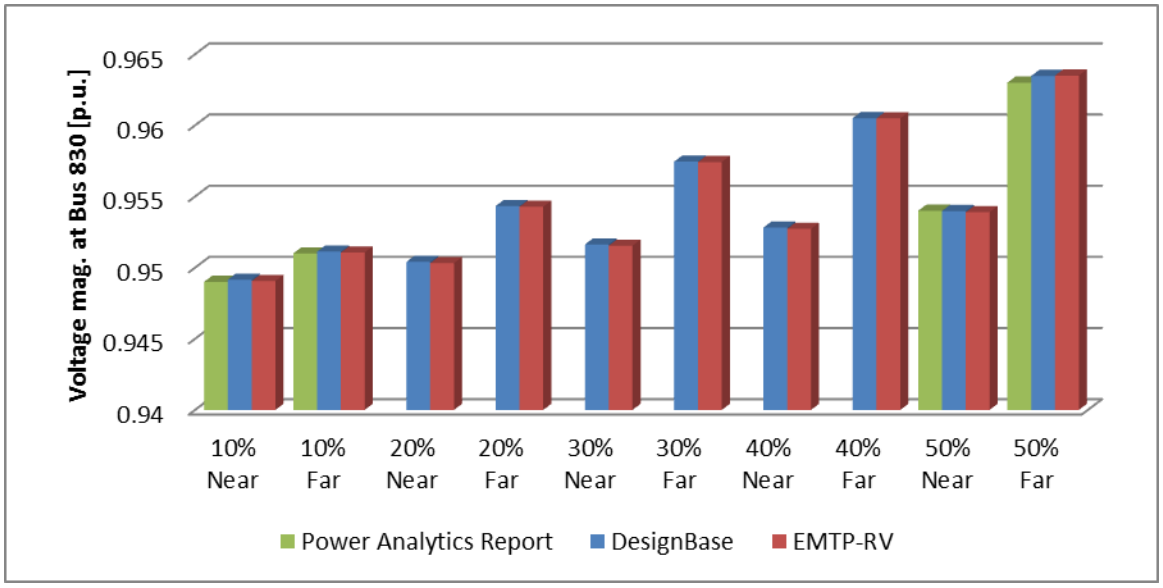

Figure 34: Comparison of voltage magnitude results at bus 830 from Power Analytics Report, EnerNex DesignBase simulations, and EnerNex EMTP-RV simulations for all scenarios at 12 p.m.

Table 20: Percentage difference of voltage magnitudes relative to EMTP-RV results.

	Report [%]	DesignBase [%]
10% Near	0.006	-0.010
10% Far	0.007	-0.007
20% Near	(N/A)	-0.009
20% Far	(N/A)	-0.005
30% Near	(N/A)	-0.010
30% Far	(N/A)	-0.003
40% Near	(N/A)	-0.009
40% Far	(N/A)	-0.001
50% Near	-0.011	-0.008
50% Far	0.052	0.003

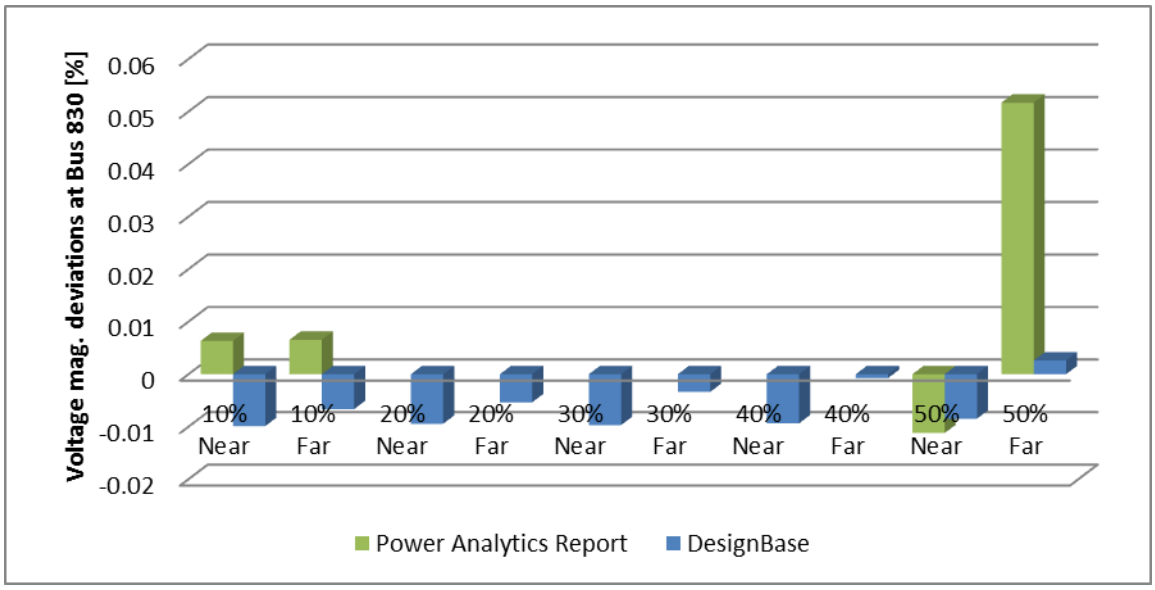

Figure 35: Illustration of percentage difference of voltage magnitudes relative to EMTP-RV results.

2.7.6.9. *Short-Circuit Analysis*

In this section, we present and compare the steady-state short-circuit results from the three different simulations, that is, (1) the DesignBase simulations conducted by Power Analytics and documented in [1], (2) the DesignBase simulations conducted by EnerNex, and (3) EMTP-RV simulations conducted by EnerNex. The short-circuit analysis was performed for the 50% PV penetration scenario with the PV generators located near the substation.

Table 21 documents the symmetrical and asymmetrical short circuit currents at each bus in response to a three-phase fault at the respective bus. The symmetrical short-circuit current I_{sym} is the ac component of the fault current. The asymmetrical short-circuit current I_{asym} is composed

of both AC and DC components of the fault current. The symmetrical and asymmetrical short-circuit currents listed in the table are illustrated in Figure 36 and Figure 37, respectively. The table and the figures show that the results from the report and from our DesignBase simulations are essentially identical while the EMTP-RV results deviate somewhat. In order to quantify the differences between the results from the report and the EMTP-RV simulations, we calculated the percentage differences of the symmetrical and asymmetrical short-circuit currents with respect to the EMTP-RV simulation results. The results are displayed in Figure 38 and Figure 39. The largest difference for the symmetrical short circuit current is 5.3% and the largest difference for the asymmetrical short-circuit current is 8.4%.

Table 21: Three-phase symmetrical and asymmetrical short circuit currents.

Bus	Report		DesignBase		EMTP-RV	
	Isym, A	Iasym, A	Isym, A	Iasym, A	Isym, A	Iasym, a
800	549.09	780.41	549.09	780.41	547.58	783.47
802	539.55	746.56	539.55	746.55	537.78	754.82
806	533.26	725.60	533.25	725.6	531.61	737.15
808	431.51	488.57	431.5	488.56	427.33	526.01
810	419.18	471.50	419.18	471.49	414.70	508.08
812	346.58	365.71	346.58	365.71	340.83	396.39
814	297.79	307.46	297.78	307.46	291.59	330.69
818	294.10	302.86	294.1	302.86	287.60	324.96
820	213.31	214.11	213.3	214.11	203.05	216.04
822	196.74	197.20	196.74	197.2	186.34	196.58
824	281.03	287.89	281.03	287.89	274.55	307.74
826	275.14	280.96	275.14	280.96	268.20	298.99
830	280.97	287.83	280.97	287.82	274.50	307.67
840	280.75	287.58	280.75	287.58	274.27	307.38
844	280.78	287.61	280.77	287.61	274.31	307.42
850	297.77	307.45	297.77	307.44	291.57	330.68
888	805.21	834.74	805.2	834.74	789.36	879.12
890	803.87	833.18	803.86	833.18	787.99	877.37
PV-BUS1	10705.0	13017.2	10704.9	13017.2	10865.7	12701.2
PV-BUS2	11551.4	12100.7	11551.3	12100.6	11443.2	12118.5

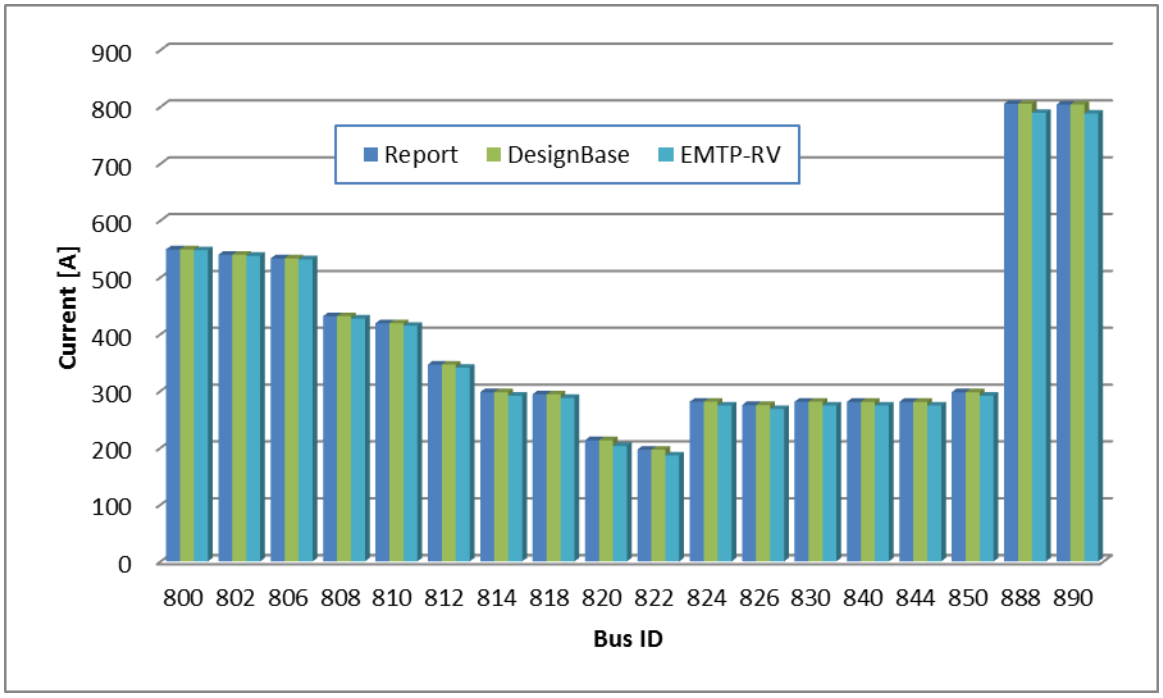

Figure 36: Comparison of symmetrical three-phase short circuit currents from Power Analytics Report, EnerNex DesignBase simulations and EnerNex EMTP-RV simulations.

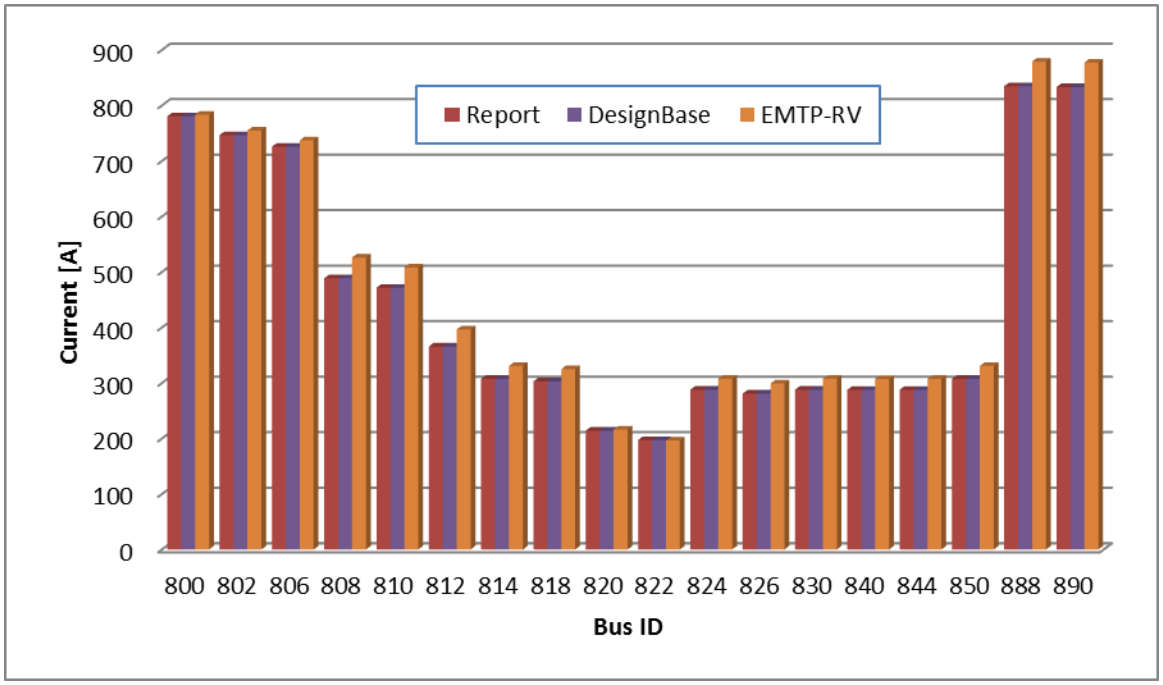

Figure 37: Comparison of asymmetrical three-phase short circuit currents from Power Analytics Report, EnerNex DesignBase simulations and EnerNex EMTP-RV simulations.

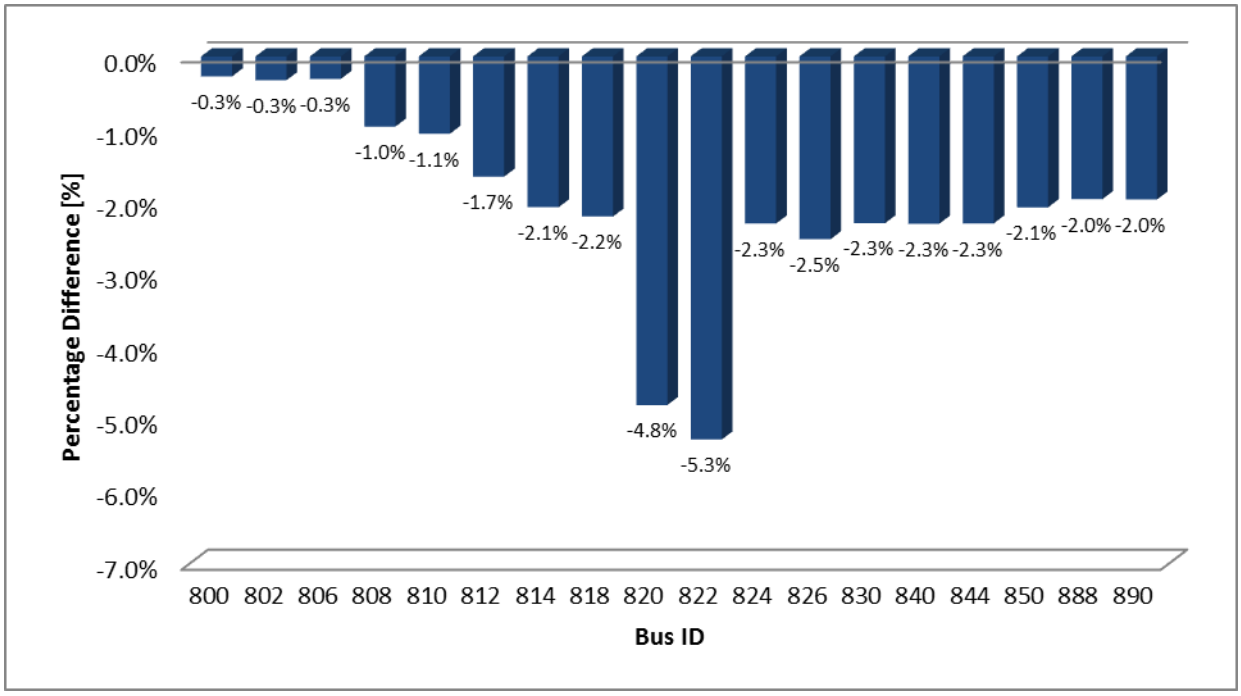

Figure 38: Percentage differences of symmetrical three-phase short circuit currents relative to EMTP-RV results.

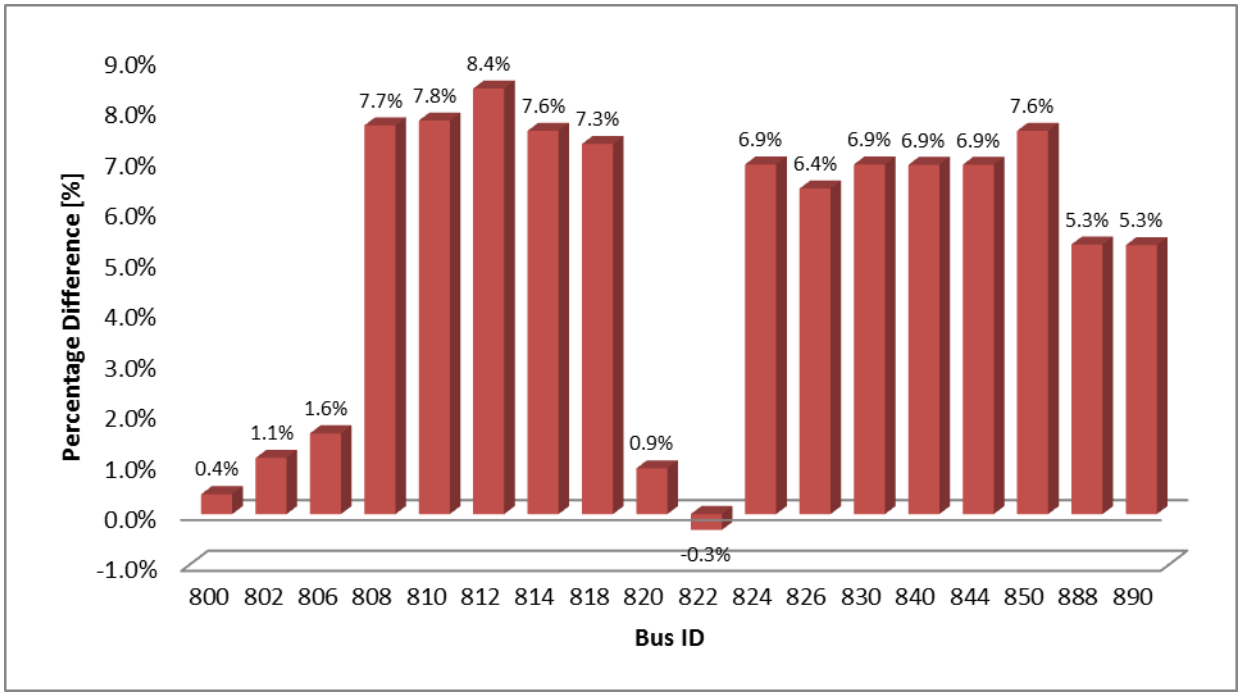

Figure 39: Percentage differences of asymmetrical three-phase short circuit currents relative to EMTP-RV results.

2.7.6.10. *Conclusion of Steady-State Analysis*

In this section, we reviewed the appropriateness of the PV model employed by Power Analytics in a load flow analysis on test system that is based on the IEEE 34 bus test feeder. The PV model is a generator model for which the active power and reactive power are specified. Changing solar radiation levels and the resulting changes in PV generation are accounted for by linearly scaling the power generated by the PV generators accordingly. We think that this representation is entirely appropriate for a load flow analysis.

We presented and compared the results from load flow simulations obtained from (1) DesignBase simulations conducted by Power Analytics and documented in [1], (2) DesignBase simulations conducted by EnerNex, and (3) EMTP-RV simulations conducted by EnerNex. The results were essentially identical with minimal difference presumably due to rounding errors, difference in load flow solution algorithms used by the different software applications, etc. The similarity shows that the load flow results are essentially independent of the software application employed in the analysis, which confirms that DesignBase is an appropriate tool for such an analysis.

We presented and compared the results from steady-state short-circuit simulations obtained from (1) DesignBase simulations conducted by Power Analytics and documented in [1], (2) DesignBase simulations conducted by EnerNex, and (3) EMTP-RV simulations conducted by EnerNex. The three-phase short-circuit currents from (1) and (2) were essentially identically while the short-circuit currents from the EMTP-RV simulation were accurate within 5.3% for the symmetrical short-circuit currents and within 8.4% for the asymmetrical short circuit currents.

2.7.7. Validation of Transient Analysis

2.7.7.1. *Significance of a Transient Analysis*

To verify system requirements, EnerNex validated the transient analysis which included use of the Power Analytics dynamic PV model. PV integration issues that can be addressed in a transient analysis include (1) PV interaction with voltage regulation equipment, (2) transient PV response to faults, (3) dynamic stability, (4) low-voltage ride through, etc. All of these issues involve the microsecond to millisecond response of the PV to disturbances and consequently PV models that accurately capture the PV behavior during these small time frames are required for a transient analysis. Dynamic PV models use average values of the current and voltages and are usually appropriate for stability studies on a millisecond time scale. The most detailed and sophisticated models are transient PV models that include representations of all key electrical components in the PV generator, such as the converter and switches. Transient models are required to accurately capture the microsecond PV response to disturbances, to investigate control interaction with PV and other equipment in the system, and to reproduce harmonics caused by the converter switching operations.

2.7.7.2. *PV Model Description*

In this section, we describe the Power Analytics dynamic PV model, which is integrated into their DesignBase V4.0 software and the PV model developed by EnerNex in PSCAD.

2.7.7.3. *Power Analytics PV Model*

Figure 40 shows the schematic of the Power Analytics PV mode. Based on the PV bus voltage and PV bus frequency, the user-defined PV models will calculate the desired PV active power and reactive power output, and then send these signals to PV interface inverter to inject AC power to power grid.

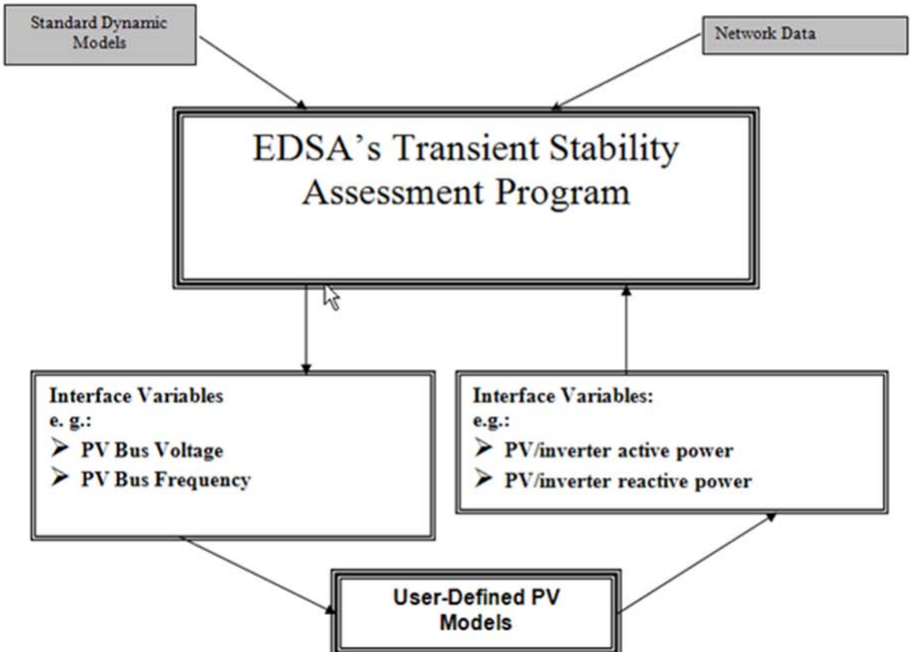

Figure 40: The schematic of Application programming interface.

The user-defined PV model algorithm and the power control of the inverter are shown in Figure 41 and Figure 42. The figures are provided in the DesignBase manual. This general PV/Inverter model includes PV cell model, MPPT control, DC-AC inverter control, and protection. Based on the information in the figure, we make the following observations:

- The PV model is three phase balanced.
- PV output active power is only related to output voltage angle.
- PV output reactive power is only related to output voltage magnitude.
- No switching loss in IGBTs of PV inverter.

These assumptions are accurate when the system R/X ratio is very low. However, the error of this non-decoupled active power and reactive power control will be amplified when the R/X ratio grows.

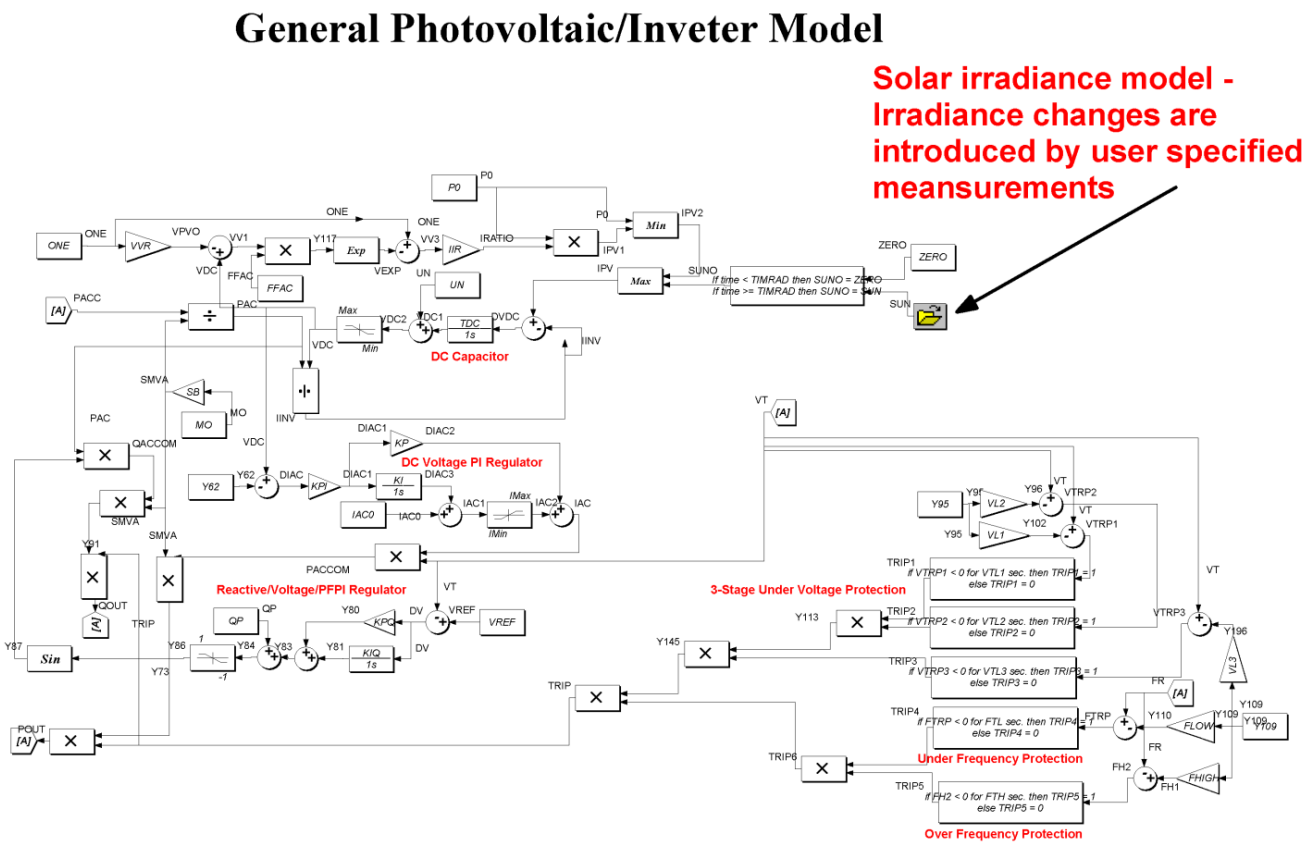

Figure 41: General PV/Inverter model

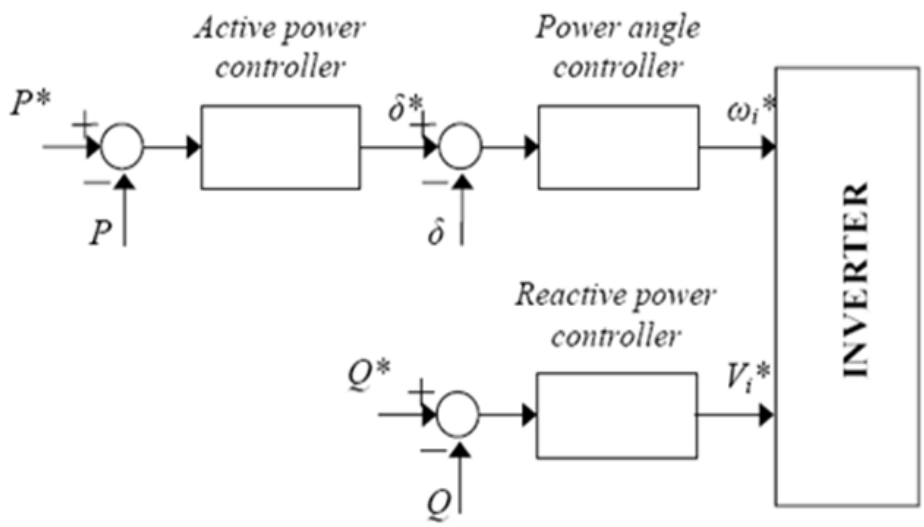

Figure 42: Power control of the Interface inverter

Figure 43 shows the PV array part in Power Analytics PV model. This component simulates the PV current/voltage based on the sun irradiance.

The mathematical model of PV array is as follows:

$$I_{PV1} = P_{p.u.} \cdot \frac{I_{sc}}{I_{p\,max}} \cdot \left[1 - exp\left[\frac{V_{DC} - \frac{V_{oc}}{V_{p\,max}}}{1 - \frac{V_{oc}}{V_{p\,max}}} \cdot \log\left(1 - \frac{I_{p\,max}}{I_{sc}}\right)\right]\right] \tag{1}$$

$$I_{PV1} = P_{p.u.} \cdot \frac{I_{sc}}{I_{p\,max}} \cdot \left[1 - \left[\left(1 - \frac{I_{p\,max}}{I_{sc}}\right) \wedge \left(\frac{V_{DC} - \frac{V_{oc}}{V_{p\,max}}}{1 - \frac{V_{oc}}{V_{p\,max}}}\right)\right]\right] \tag{2}$$

$$P_{p.u.} = \frac{P_{PV,0}}{S_B} \tag{3}$$

$$I_{PV2} = min(I_{PV1}, P_{p.u.}) \tag{4}$$

$$I_{PV} = max(I_{PV2}, sun) \tag{5}$$

$$V_{DC} = \left(T_{DC} \int (I_{PV} - I_{INV})\, di\right) + 1 \tag{6}$$

$$I_{INV} = \frac{P_{AC,p.u.}}{V_{DC}} \tag{7}$$

where I_{PV} is the PV output current, V_{DC} is the DC link voltage, and I_{INV} is the inverter current.

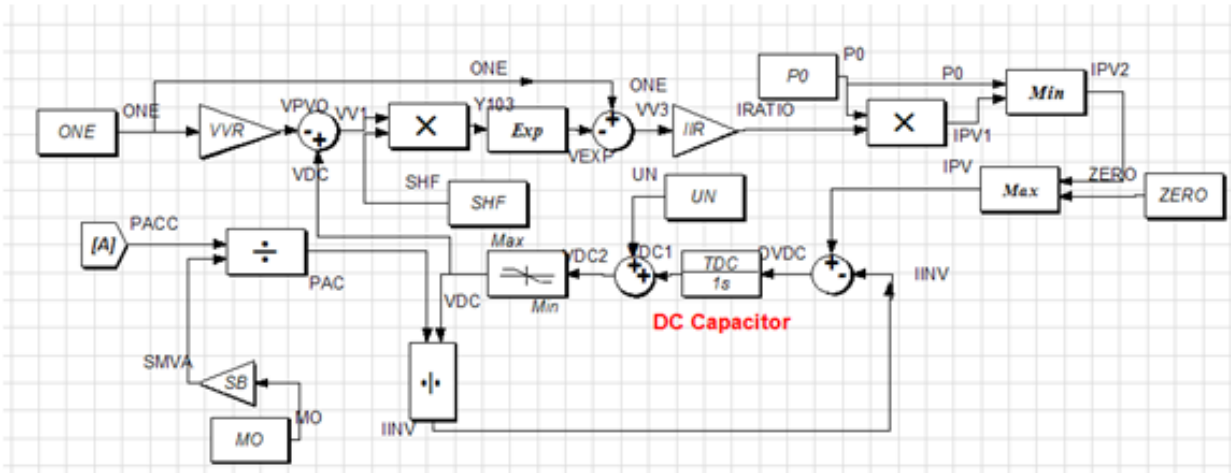

Figure 43: PV array part in Power Analytics PV model

Figure 44 shows the "Voltage and Frequency Protection" part of the Power Analytics PV model. If any voltage or frequency criteria is violated, a signal is sent and the PV model trips. In the protection scheme, there are two stages of under voltage protection with two different limits, and one under frequency protection. The trip signals will be multiplied by the output Active and Reactive signals. The value of trip signal is always 1 unless a fault happens which turns the value of this signal to 0.

This is a critical component of the PV model because, the protection of PV against abnormal voltage and frequency operation is extremely important; not only from device protection point of view but also for power utility operation. For instance, the planning/operation engineer needs to know how long and to what level PV can ride through disturbances.

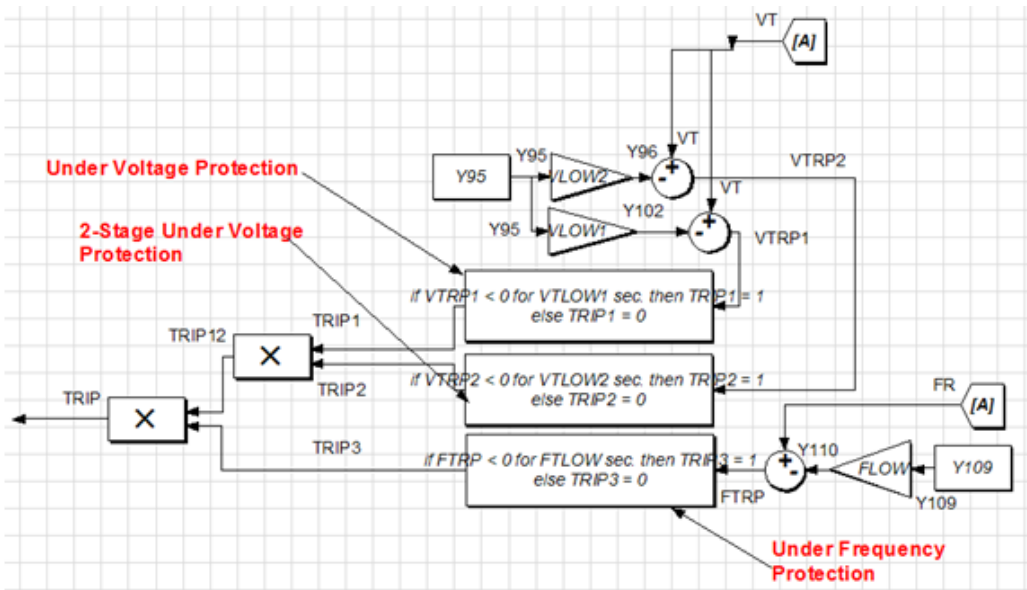

Figure 44: Voltage and Frequency protection part in Power Analytics PV model

Figure 45 shows the DC voltage PI regulator part of the Power Analytics PV model. The mathematical model of DC voltage PI regulator is as follows:

$$dI_{AC} = V_{DC} - 1 \tag{8}$$

$$I_{AC,0} = \frac{P_{PV,0}}{S_B \cdot V_{T,0}} \tag{9}$$

$$I_{AC} = K_{PI}\left(K_P + \frac{K_I}{1\,s}\right) dI_{AC} + I_{AC,0} \tag{10}$$

$$P_{out,p.u.} = I_{AC} \cdot V_T \tag{11}$$

where $P_{out,p.u.}$ is the active power output of PV unit in per unit.

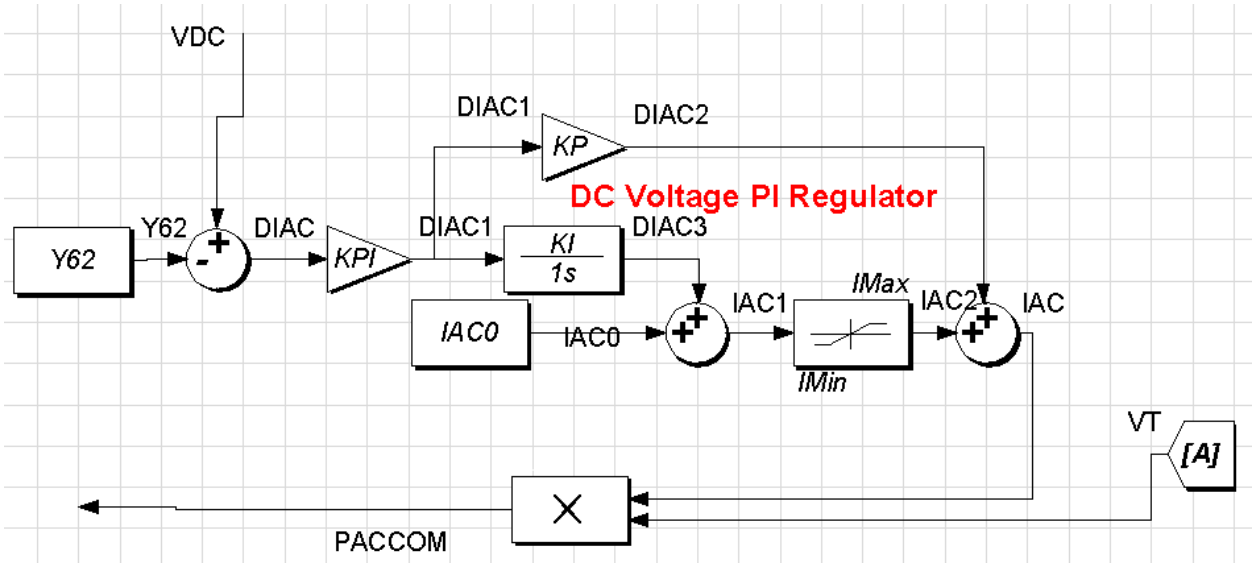

Figure 45 - DC voltage PI regulator part in Power Analytics PV model

Figure 46 shows the PI regulator part in Power Analytics PV model for reactive power, voltage, and power factor. The mathematical model of Reactive/Voltage/Power-Factor PI Regulator is as follows:

$$dV = V_{T0} - V_T \tag{12}$$

$$Q_P = \sin^{-1}\left(\frac{Q_{PV,0}}{P_{PV,0}}\right) \tag{13}$$

$$Q_{out} = P_{AC,p.u.} \cdot \sin\left(dV \cdot \left(K_{PQ} + \frac{K_{IQ}}{1\,s}\right) + Q_P\right) \tag{14}$$

$$Q_{out} = P_{AC,p.u.} \cdot \sin\left(dV \cdot \left(K_{PQ} + \frac{K_{IQ}}{1\,s}\right) + \sin^{-1}\left(\frac{Q_{PV,0}}{P_{PV,0}}\right)\right) \tag{15}$$

where $Q_{out,p.u.}$ is the reactive power output of PV unit in per unit.

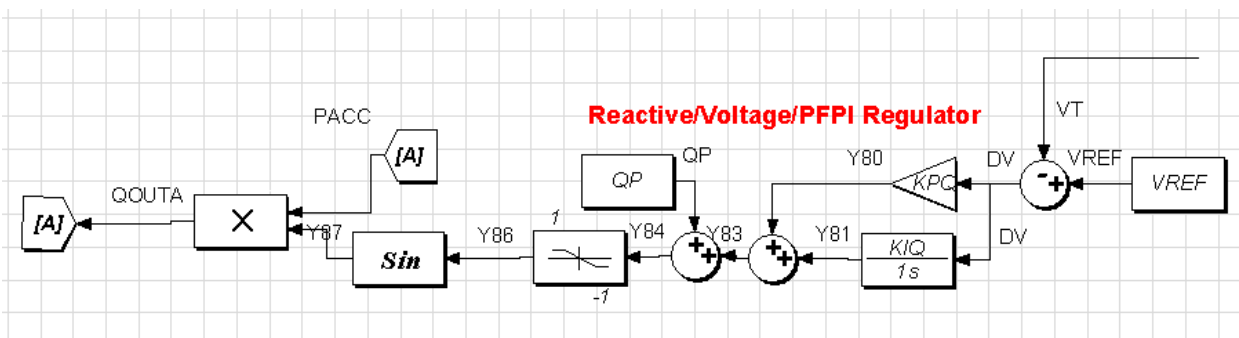

Figure 46 - Reactive/Voltage/PF PI Regulator part in Power Analytics PV model

2.7.7.4. *EnerNex PV Model*

The EnerNex PV model consists of the following components: (1) a PV module, (2) a DC-DC booster, and a DC-AC inverter. Each model component is explained in the following sections.

2.7.7.5. *PV Model*

The function of the PV module (or panel) is to simulate the photovoltaic effect of generating energy from solar irradiation. A PV module is composed of series and parallel combinations of large numbers of PV cells, which are the basic component of a PV module. The external

characteristic of a PV cell can be expressed as a current source with an anti-parallel diode as shown in Figure 47. I_{ph} is the current generated directly by the insolation, I_d is the current flow through Diode, R_{sh} is the shunt resistor of the PV module, I_r is the current flow through R_{sh}, R_s is the series resistor of PV panel, and I_{pv} is the output current of PV module.

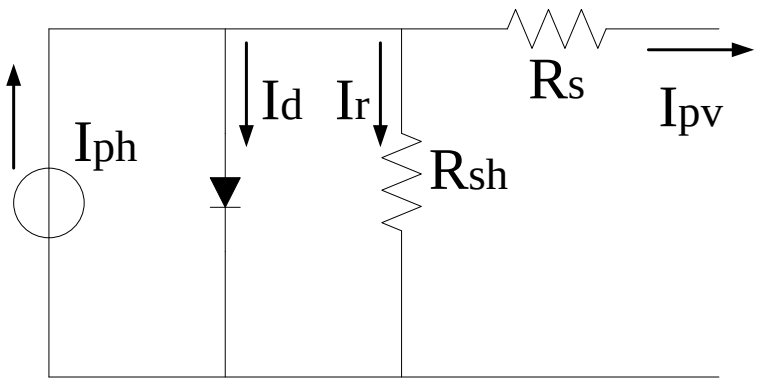

Figure 47: Equivalent PV cell circuit.

I_{pv}, I_d and I_{ph}can be calculated as follows:

$$I_{pv} = I_{ph} - I_d - I_r \tag{16}$$

$$I_{ph} = [I_{sc} + K_i(T - T_n)]\frac{G}{G_n} \tag{17}$$

$$I_d = I_0\left[e^{\frac{q(V_{pv}+I_{pv}R_s)}{\alpha KT}} - 1\right] \tag{18}$$

where I_{sc} is the short circuit current of the PV module, K_i is the short circuit current/temperature coefficient, G is the solar insolation in W/m^2, G_n is the nominal solar insolation, V_{pv} is the PV module output voltage, q is the electron charge ($1.6 \times 10^{-19}C$), K is the Boltzmann constant (1.38×10^{-23}J/K), α is the ideality factor, which varies between 1.0 and 1.5 (we selected 1.2), T is the temperature in Kelvin of the p-n junction and I_0 is diode saturation current, which is:

$$I_0 = I_{0,n}\left[e^{\frac{qE_g}{\alpha K}(\frac{1}{T_n} - \frac{1}{T})} - 1\right] \tag{19}$$

where E_g is the band gap energy of the diode (we selected 1.2), $T_n$is the nominal temperature (298 Kelvin), and $I_{0,n}$ is the nominal saturation current, which can be calculated as follows:

$$I_{0,n} = \frac{I_{sc}}{e^{\frac{V_{oc}}{\alpha V_t}} - 1} \tag{20}$$

where V_{oc} is the open circuit voltage of PV module, V_t is the thermal voltage of PV cell, which is defined as $V_t = N_s KT/q$ with N_s being the number of PV cell in series.

Based on the equations above, the PV module model is established in PSCAD/EMTDC as shown in Figure 48:

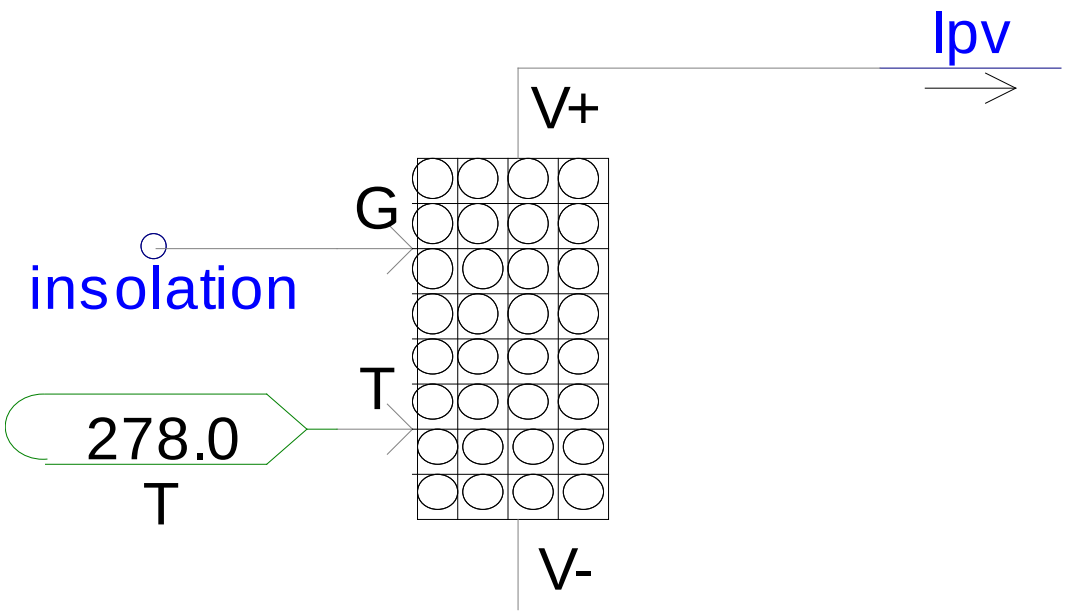

Figure 48: PV module model in PSCAD.

The input of the PV module is insolation G and temperature T, and the output I_{pv} is used as the external signal of a controllable current source, which represents the PV module in the circuit. The magnitude of this current source is determined by insolation, temperature and across voltage according to the equations above.

Figure 49 and Figure 50 show the IV characteristic and PV characteristic of the PV cell for fixed insolation using this model. P_{pv} is the PV module output power. From these figures, it can be seen that P_{pv} reaches maximum value when PV cell terminal voltage reaches 16.3V and the short circuit current is 5.08A while the open circuit voltage is 21.83V. Those characteristic curves are matching with the PV curves in Gupta et al. (2010) [4].

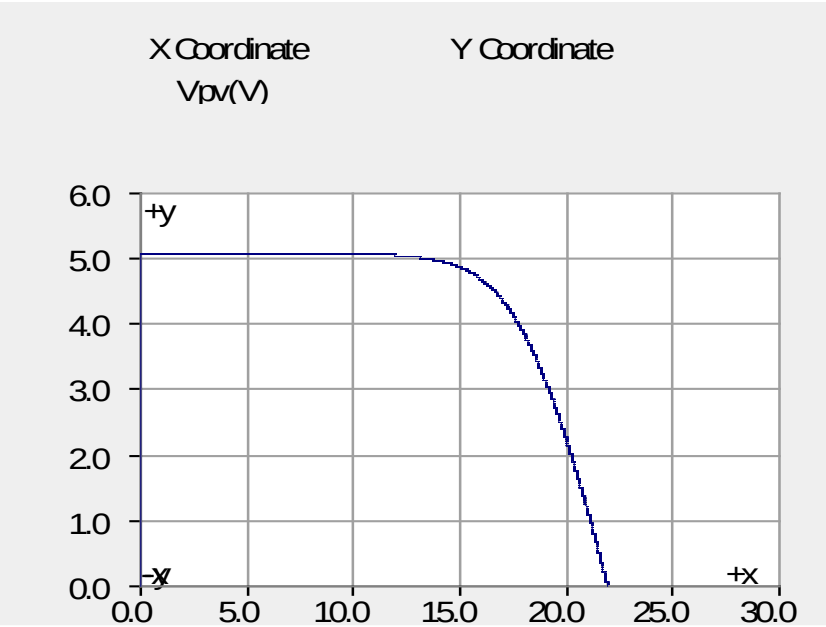

Figure 49: IV characteristic of PV cell for 1000W/m² Insolation.

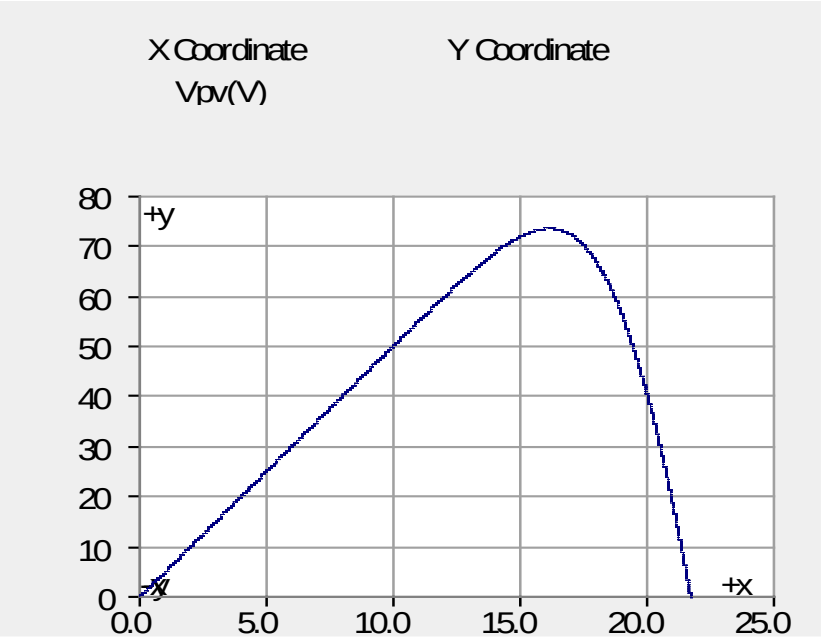

Figure 50: PV characteristic of PV cell under 1000W/m² Insolation.

2.7.7.6. *DC-DC booster*

The functions of a DC-DC booster are twofold: (1)) stepping up (aka 'boosting') the PV module terminal voltage to a higher DC voltage and (2) controlling the PV module to operate near or at

the peak point of the PV curve for efficient utilization of the solar energy. Figure 51 shows a basic schematic of a DC-DC booster in PSCAD, where Edc is the voltage across the inverter DC bank.

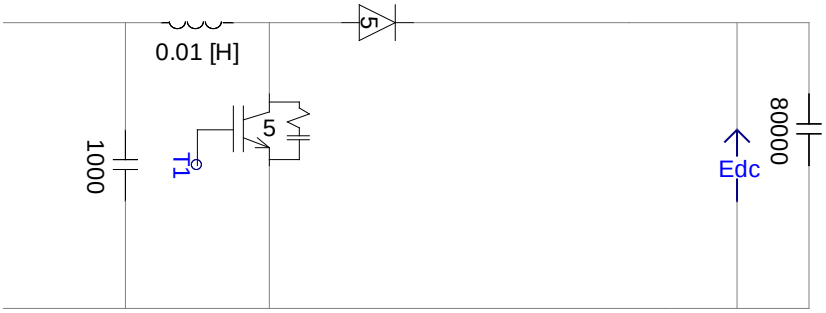

Figure 51: DC-DC booster in PSCAD.

The voltage can be stepped up according to the following equation:

$$V_o = \frac{V_i}{1 - D} \tag{21}$$

where V_o is the output voltage, V_i is the input voltage, and D is the duty cycle of the IGBT as shown in Figure 51. D varies between 0 and 1 and it is apparent from the equation that V_o is always larger than V_i. For a certain V_i, there are different combinations of D and V_o. However, the value of V_o is not controlled by the DC-DC booster.

Techniques that control the voltage so that the PV operates at maximum efficiency are called Maximum Power Point Tracking (MPPT). From the PV characteristics curve shown in Figure 49 and Figure 50, it can be seen that at a given temperature and insolation, the output power is determined by the output voltage and there is a unique voltage value that results in maximum power output from the PV. To maximize efficiency, the primary side voltage of DC-DC must be maintained at this point by controlling the trigger angles of the IGBTs of the DC-DC booster. Various MPPT techniques have been published. In our PV model, we adopted the Hill climbing method. In the Hill Climbing algorithm, the present output power and the power of during last time-step are compared and the reference value of the PV module output voltage is increase or decrease accordingly. The MPPT method used here is shown in Figure 52, where Vpvout is the present PV module terminal voltage, Vmppt is the MPPT reference value, SR is the sample frequency, and TD is the time delay applied to Vpvout and Ppv. Vpvout and Ipv are measured continuously, and the sample frequency is 1kHz.

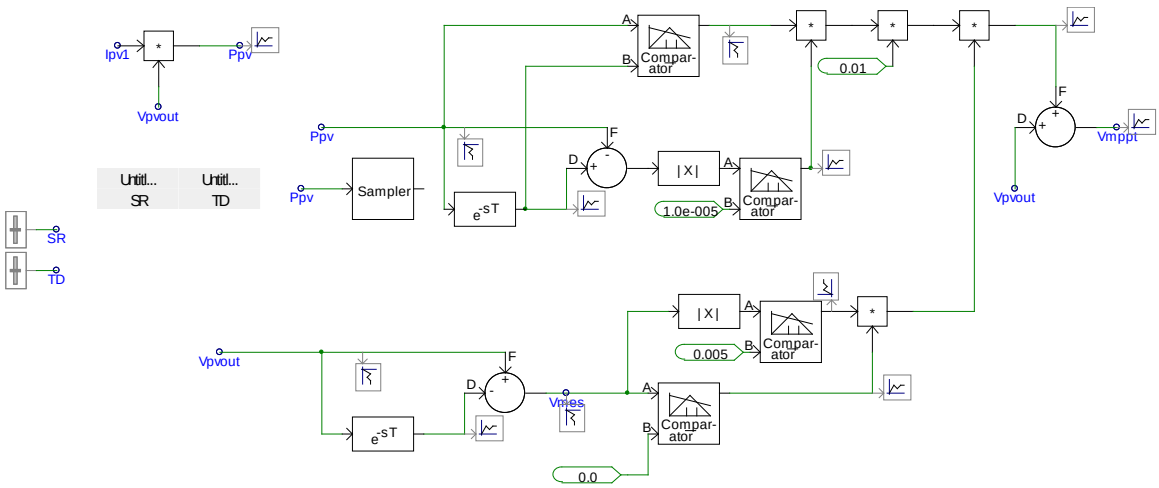

Figure 52: MPPT control method

The MPPT procedure is as follows:

Step 1) Calculate P(k).

Step 2) Compare P(k) with P(k-1).

Step 3) Change the reference voltage according to following rules:

If $|P(k) - P(k-1)| \leq \varepsilon_1$, keep the present reference voltage;

If $P(k) - P(k-1) > \varepsilon_1$, check $|V(k) - V(k-1)|$.

If $|V(k) - V(k-1)| \leq \varepsilon_2$, keep the present reference voltage;

If $(V(k) - V(k-1)) > \varepsilon_2$, increase the reference voltage by ΔV.

If $(V(k) - V(k-1)) < -\varepsilon_2$, increase the reference voltage by -ΔV.

If $P(k) - P(k-1) < -\varepsilon_1$, check $|V(k) - V(k-1)|$.

If $|V(k) - V(k-1)| \leq \varepsilon_2$, keep the present reference voltage set point;

If $(V(k) - V(k-1)) > \varepsilon_2$, increase the reference voltage by -ΔV.

If $(V(k) - V(k-1)) < -\varepsilon_2$, increase the reference voltage by +ΔV.

where $P(k)$ and P(k-1) are PV module output power at time k and k-1, V(k) and V(k-1) are PV terminal voltage at time k and time k-1, and ε_1, ε_2 are near zero positive numbers.

Figure 53 illustrates the performance of this hill climbing control. Vpv_w/o is the PV module output voltage without MPPT, Vpv_with is the PV module output voltage with MPPT, Ppv_w/o is the PV module output power without MPPT, and Ppv_with is the PV module

output power with MPPT. It can be seen that PV module output voltage is changing along with the insolation trajectory. Moreover, the PV module can provide more power with MPPT control at any insolation level.

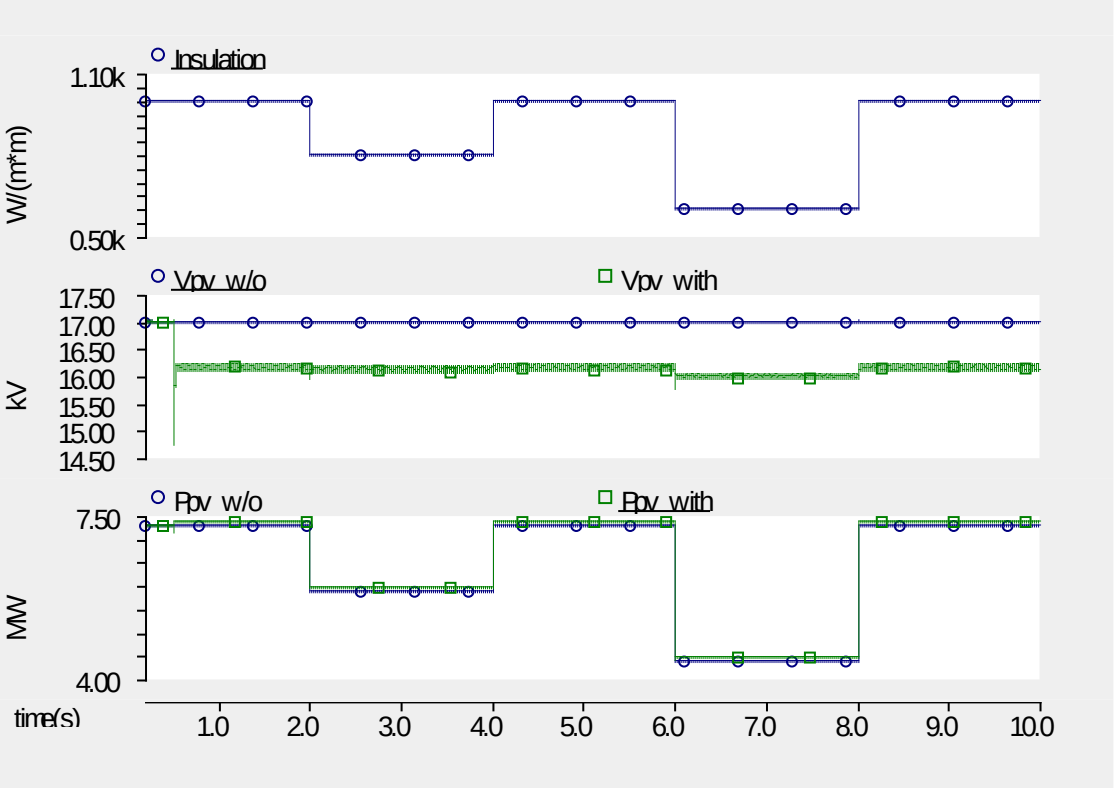

Figure 53: Performance of Hill Climbing MPPT algorithm

2.7.7.7. *DC-AC inverter*

Figure 54 shows a basic schematic of a DC-AC inverter in PSCAD. The functions of DC-AC inverter are twofold: (1) Balancing the average power delivery from the PV module to the Point of Common Coupling (PCC) and (2) Providing desired reactive power to the power system.

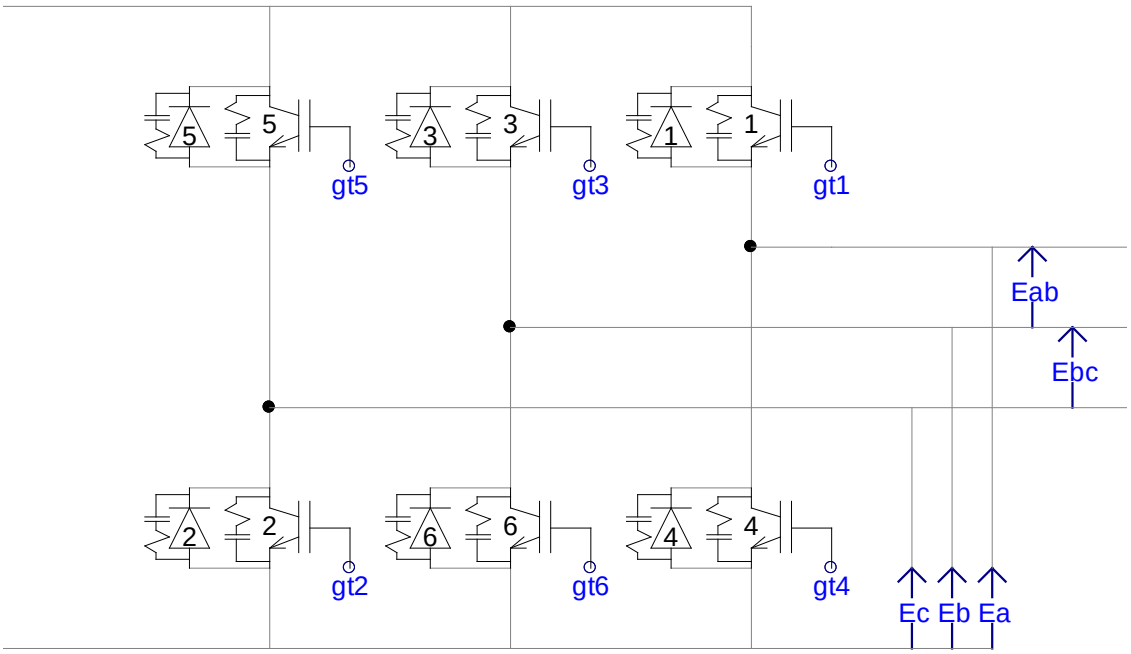

Figure 54: DC-AC inverter in PSCAD

The energy balance function is

$$P_{pv} = P_{pvmodule} - P_{loss} \tag{22}$$

where, P_{pv} is the AC power delivered to PCC, $P_{pvmodule}$ is the power generated by PV module directly, and P_{loss} is the total loss during delivery, which includes switching loss of IGBTs of DC-DC booster and DC-AC inverter, energy loss on inductor and capacitor, and power used to charge the capacitor.

Normally, in order to achieve power conversion efficiency close to 100%, the reactive power exchange between PV inverter and PCC is set to 0. However, this set value should be changeable according to system requirements. For example, reactive power is needed to withstand PCC voltage during fault and speed up system recovery after faults.

The reactive power controller of the grid inverter needs to be constructed with different functions according to the operation modes of the power grid. The two different operations modes are 'normal operation' and 'contingency operation'. For the 'normal operation' mode, the variation of the PCC bus voltage is very small or constant. In this mode, the reactive power exchange between PV and power grid should be kept at near zero. For the 'contingency operation' mode, the PCC bus voltage drops to a small value (a typical value is 0.7 pu). In this mode, the PV should be able to stabilize the voltage by providing reactive power support.

Similar to reactive power control, active power control also needs to be constructed for 'normal operation' mode and 'contingency operation' mode. For the 'normal operation' mode, the active

power flow to the grid should be maintained at maximum value. For 'contingency operation' mode, the PV active power output should be decreased in order to decrease the fault current.

According to aforementioned requirements for PV inverter controller, the active power and reactive power should be controlled independently. This can be accomplished by using dq0 transformation:

$$\begin{bmatrix} q \\ d \\ 0 \end{bmatrix} = \frac{2}{3} \cdot \begin{bmatrix} \cos(\theta) & \cos(\theta - \frac{2\pi}{3}) & \cos(\theta + \frac{2\pi}{3}) \\ \sin(\theta) & \sin(\theta - \frac{2\pi}{3}) & \sin(\theta + \frac{2\pi}{3}) \\ \frac{1}{2} & \frac{1}{2} & \frac{1}{2} \end{bmatrix} \cdot \begin{bmatrix} a \\ b \\ c \end{bmatrix} \tag{23}$$

where, q, d, 0 are q-axis sequence, d-axis sequence, 0-axis sequence, $\theta = \int_0^t \omega dt$, and ω is the angular velocity of dq reference frame. To simplify the design of the PV inverter controller we make the following assumptions:

- Three phase balanced system
- Fixed terminal voltage magnitude
- No switching loss in IGBTs of PV inverter

The steady state active power and reactive power in dq0 reference frame can be written as

$$P = \frac{3}{2}(E_q I_q + E_d I_d) \tag{24}$$

$$Q = \frac{3}{2}(E_q I_d - E_d I_q) \tag{25}$$

where E_q and E_d are the dq sequence of system voltage, and I_q and I_d are the dq sequence of PV inverter output current. Since E_q is constant, and E_d is equal to 0 at synchronous speed, the above equations can be simplified as follows:

$$P = \frac{3}{2} E_q I_q \tag{26}$$

$$Q = \frac{3}{2} E_q I_d \tag{27}$$

From the above equations, it can be seen that the output power of PV inverter can be controlled by regulating the dq sequence of output current. The relation between PCC voltage and PV inverter terminal voltage in the dq0 reference frame at synchronous speed can also be written as

$$E_{sd} = RI_d + pLI_d + LI_q + E_d \tag{28}$$

$$E_{sq} = RI_q + pLI_q - LI_d + E_q \tag{29}$$

where E_{sq} and E_{sd} are the dq sequence of PV inverter terminal voltage, L is the connected reactor between PV inverter and PCC. The inverter controller consists of two loops: (1) the outer voltage loop and (2) the inner current loop. First, I_d and I_q are obtained from the outer voltage loop based on the equations above. Then E_{sq} and E_{sd} can be obtained from the inner current loop based on the equations above, which decouple I_d and I_q. After dq0-abc transformation, E_{sq} and E_{sd} are transferred back to the abc reference frame and then used as the reference for generating pulse trigger signals. The implementation of this control strategy model in PSCAD is shown in Figure 55. In the figure, Qref is the reference reactive power, Idref is the reference of Id, Iqref is the reference of Iq, Vrms is the terminal voltage rms in p.u., Imax is the upper limit of inverter current, Imin is the lower limit of inverter current, Iqmax is the upper limit of Iq, Earef, Ebref and Ecref are reference of inverter three phase voltage, and ud_prime, uq_prime are intermediate variables. The performance of this controller is shown in Figure 56 where, P is the PV active power output and Q is the PV reactive power output.

A mutative radiation is given as an input to the PV system. The base value of the irradiation is 1000 W/m^2 with a +200 W/m^2 deviation in the interval 2s - 4s and a -200 W/m^2 deviation in the interval 6s - 8s. It can be seen that P changes along with the insolation trajectory, and the reactive power is maintained at near zero at all time.

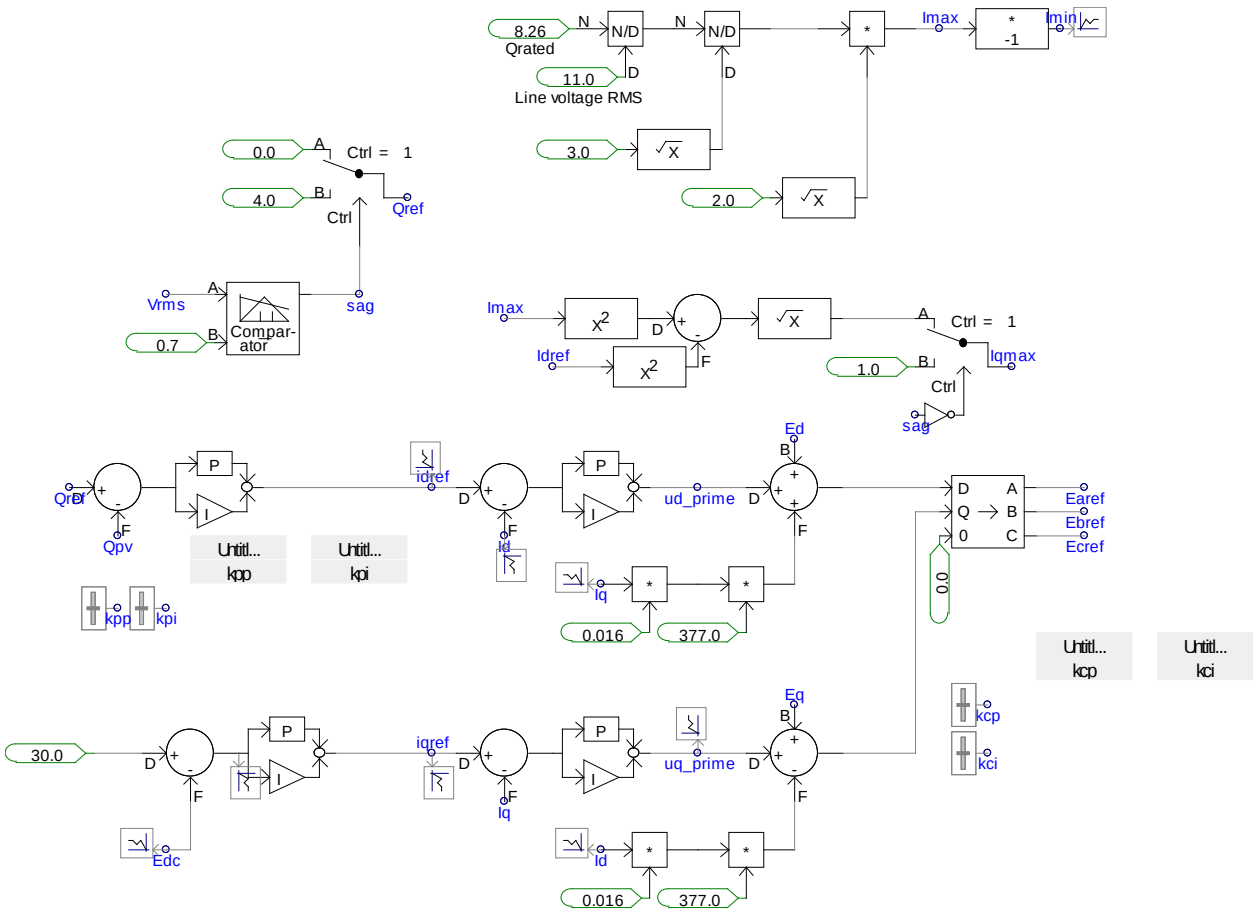

Figure 55: Control strategy of PV inverter

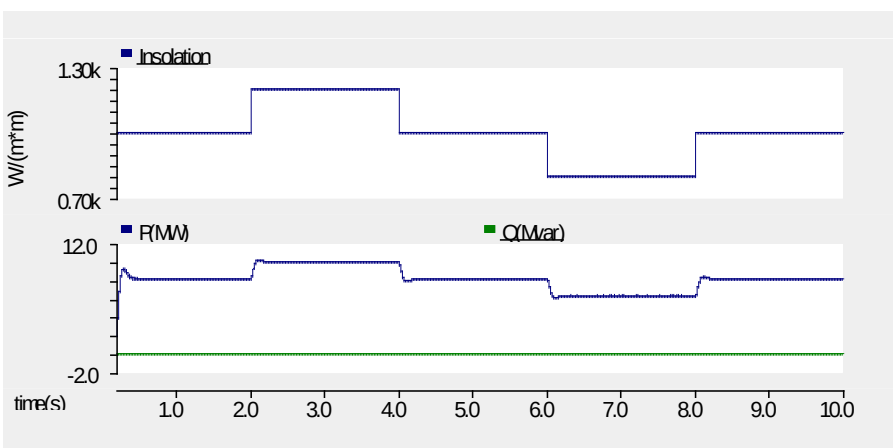

Figure 56: PV output power to the grid

As explained above, during a fault reactive power is needed to provide sufficient support to the PCC voltage during the fault, and the active power needs to be reduced to reduce the fault current. This is accomplished with a limiting control as shown in Figure 57. I_{max} is the rated inverter current in the dq0 reference frame, which is $\sqrt{2}$ times the inverter rated current in the abc reference frame. I_{qmax} can be calculated from

$$I_{qmax} = \sqrt{Imax^2 - Id^2} \tag{30}$$

If the PCC voltage rms drops below 0.7 pu, this control will be activated resulting in an increase of reactive power and a decrease of the active power

.

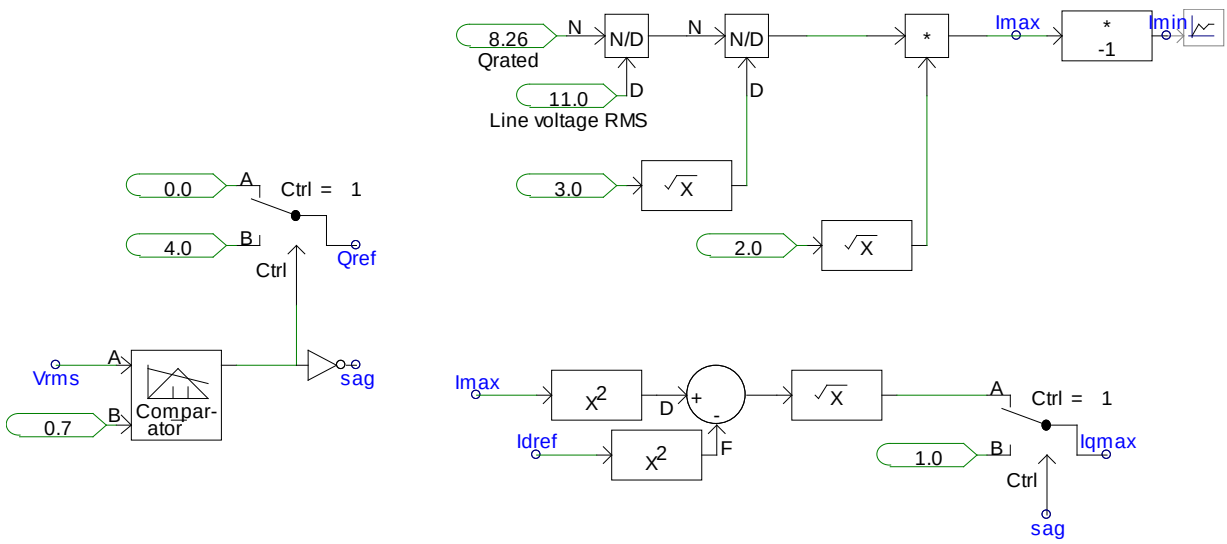

Figure 57: Power control during fault.

2.7.7.8. *Test System*

We used the 9 bus system from Anderson and Fouad (2002) [5] to compare the performance of the Power Analytics PV model with the EnerNex PV model. Figure 58 shows the circuit of the system model. The system data as implemented in PSCAD is documented in the following sections.

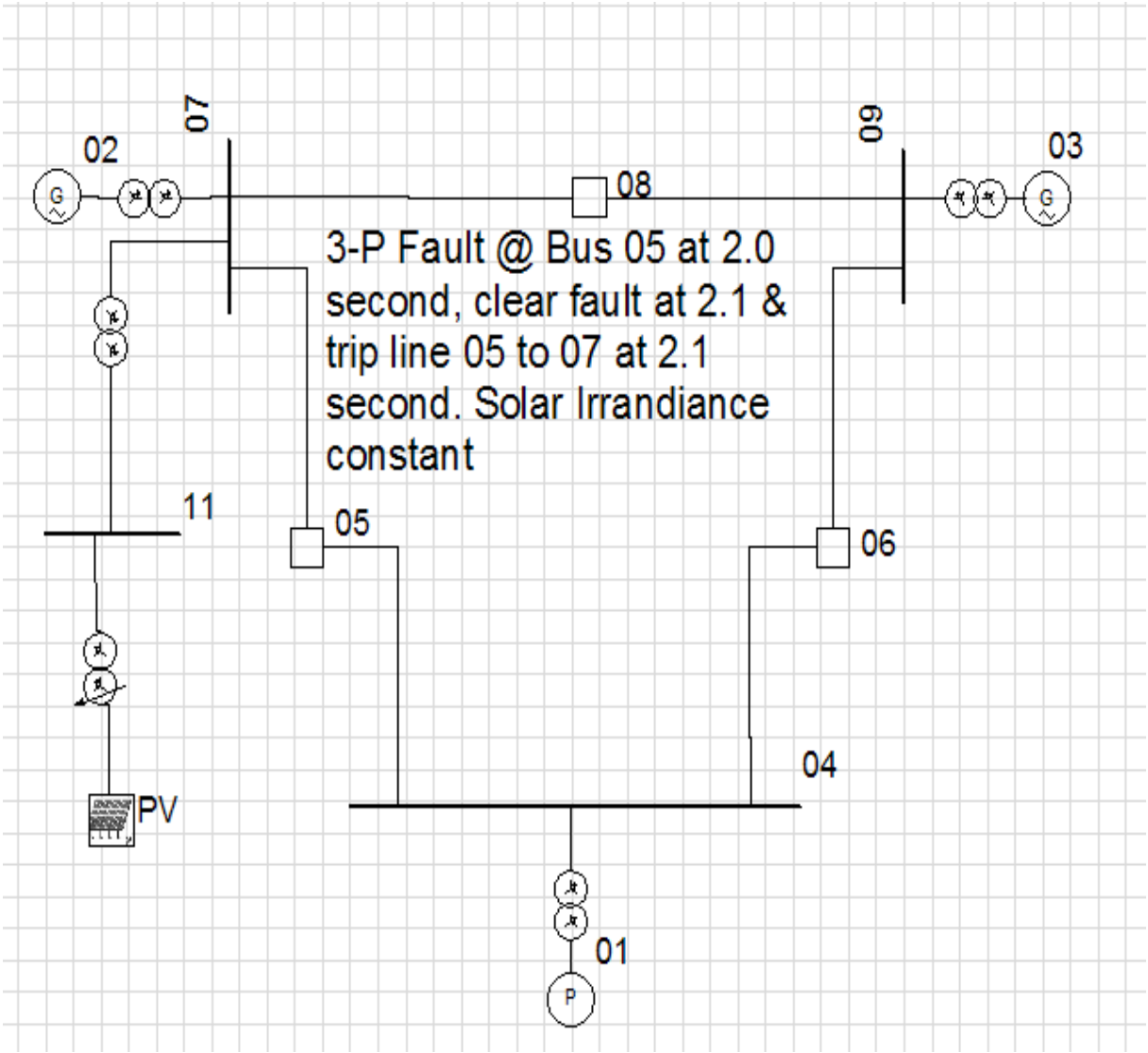

Figure 58: Nine-node test system with PV integration.

2.7.7.9. *Bus Data*

Bus	Name	Type	V Mag(V)	V Ang(deg)	P (W)	Q (VAR)	C (VAR)
01		Swing	16500.000	0	0.00	0.00	
02		Gen	18000.000	0	163000000.00	0.00	
03		Gen	13800.000	0	85000000.00	0.00	

PV	Gen	480.000	0	8000000.00	0.00	
04	Busbar	230000.000	0	0.00	0.00	
05	P_Load	230000.000	0	-125000000.00	-50000000.00	
06	P_Load	230000.000	0	-90000000.00	-30000000.00	
07	Busbar	230000.000	0	0.00	0.00	
08	P_Load	230000.000	0	-100000000.00	-35000000.00	
09	Busbar	230000.000	0	0.00	0.00	
11	Busbar	33000.000	0	0.00	0.00	
				--------	--------	--------
Total Generating Sources				256000000.00	0.00	0.00
Total Bus Loads				-315000000.00	-115000000.00	

2.7.7.10. *Branch Data*

Branch Name	Type	Library CodeName	R (Ohms)	X (Ohms)	B/2 (Mhos)	Ref °C
04 ->05	Feeder	250	5.2900	44.9650	0.000166	40.0
04 ->06	Feeder	250	8.9930	48.6680	0.000149	40.0
05 ->07	Feeder	250	16.9280	85.1690	0.000289	40.0
06 ->09	Feeder	250	20.6310	89.9300	0.000338	40.0
07 ->08	Feeder	250	4.4965	38.0880	0.000141	40.0
08 ->09	Feeder	250	6.2951	53.3232	0.000198	40.0

2.7.7.11. *Transformer & Line Voltage Regulator Data*

Branch Name	Type	Library CodeName	R (%)	X (%)	F_Tap (PU)	T_Tap (PU)
01 ->04	2-W xfmr	1000-3-D	0.0000	5.7600	1.000	1.000

```
02      ->07            2-W xfmr 1000-3-D          0.0000  12.5000 1.000 1.000

03      ->09            2-W xfmr 1000-3-D          0.0000   5.8600 1.000 1.000

07      ->10            2-W xfmr 1000-3-D          1.0000  10.0000 1.000 1.000

PVTRSFO                 2-W xfmr 1000-3-D          0.8000   5.6900 1.000 1.000
```

2.7.7.12. *PV Model Response to a Fault*

The response of the Power Analytics model and the EnerNex model to a fault is documented in this section. The test system is the nine-bus system described in Section 2.7.7.8. A three-phase fault is applied on bus 05 at 2 seconds and is cleared at 2.1 seconds. The line between bus 05 and bus 07 is tripped at 2.1 seconds. The solar insolation is assumed to be constant.

The active power as predicted by the Power Analytics model and the EnerNex model are shown in Figure 59 and Figure 60, respectively. In both models the active power prior to the fault is 8 MW. In the Power Analytics model, the active power output after the fault is a damped oscillation with an 8 MW offset and initial peak values of about ± 1 MW. After 7 seconds the oscillation is reduced to about ± 0.4 MW. In the EnerNex model, the active power during the fault is controlled to be zero in order to minimize the fault current. The active power output P_{pv} after the fault is a single 0.15-second wide spike that has a peak value of about 13.5 MW. The active power supplied by the PV module $P_{pvmodule}$ is constant due to the constant insolation assumption. P_{loss} is the total loss during delivery, which includes switching loss of IGBTs of DC-DC booster and DC-AC inverter, energy loss on inductor and capacitor, and power used to charge the capacitor. To maintain energy balance, the active power output of the PV is the active power supplied by the module minus the losses (see Equation (22)). As apparent from Equation (22) , with $P_{pvmodule}$ being constant and P_{pv} being zero during the fault, P_{loss} is increased. This increase in P_{loss} will be used to charge the DC link which results in an increase of the DC link voltage Edc.

The reactive power as predicted by the Power Analytics model and the EnerNex model are shown in Figure 62 and Figure 63, respectively. In the Power Analytics model, the reactive power output prior to the fault is 1.6 MVAr and raised to 2.8 MVAr during the fault. A few seconds after the fault clearance, the reactive power is about 1.8 MVAr. The EnerNex model does not produce reactive power prior to the fault. During the fault, the fault controller is activated resulting in an increase of reactive power up to a value of about 4.5 MVAr. The reactive power goes back to zero about 0.1 seconds after the fault is cleared.

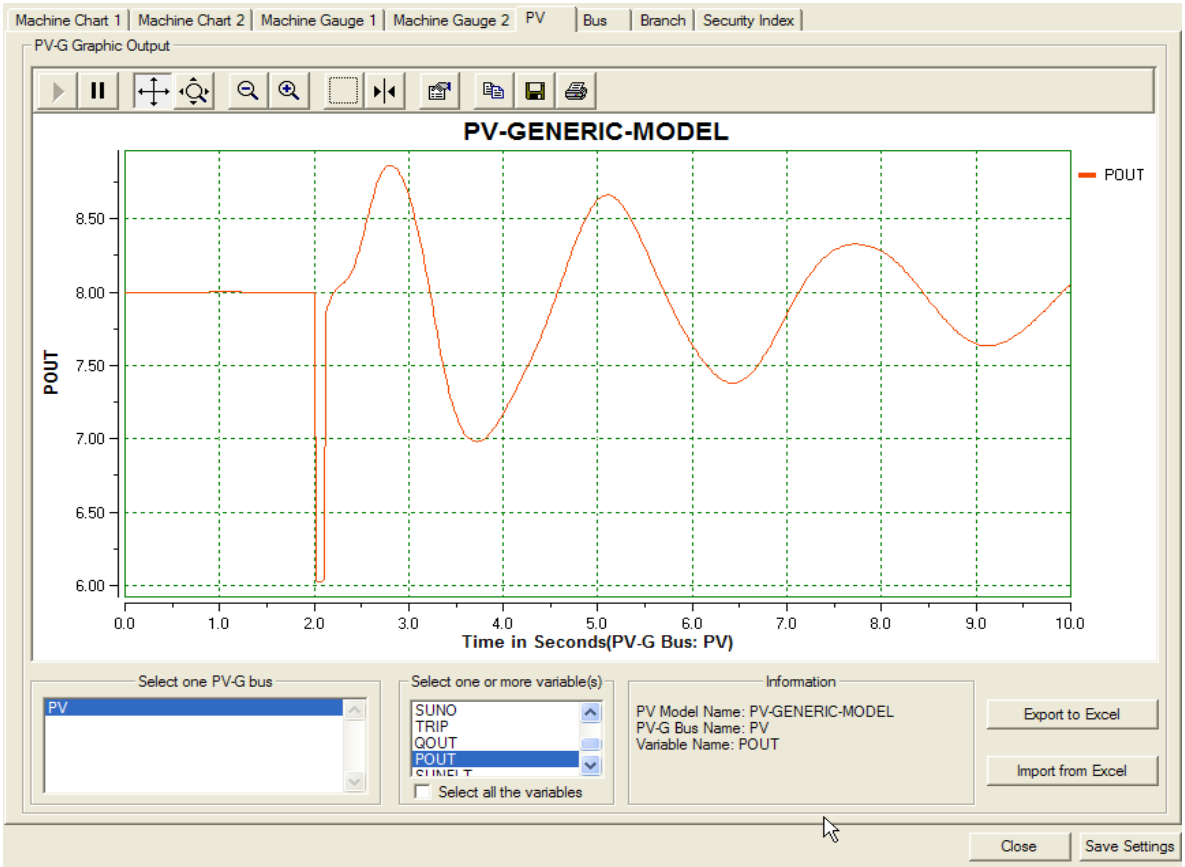

Figure 59: Active power output of Power Analytics PV model during fault scenario.

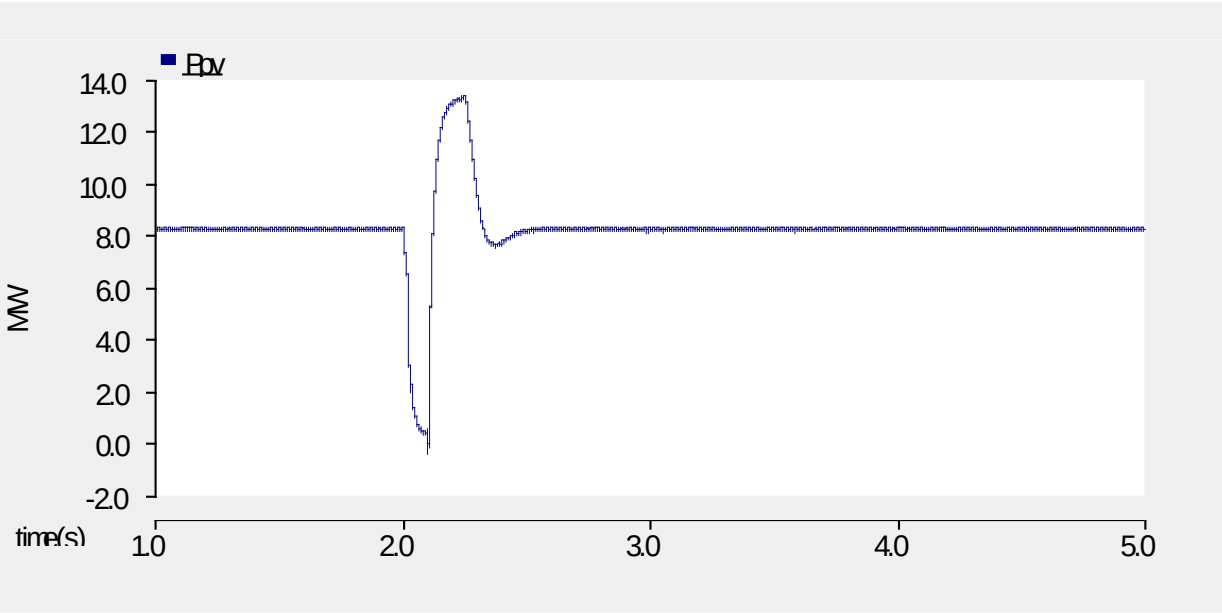

Figure 60: Active power output of EnerNex PV model during fault scenario

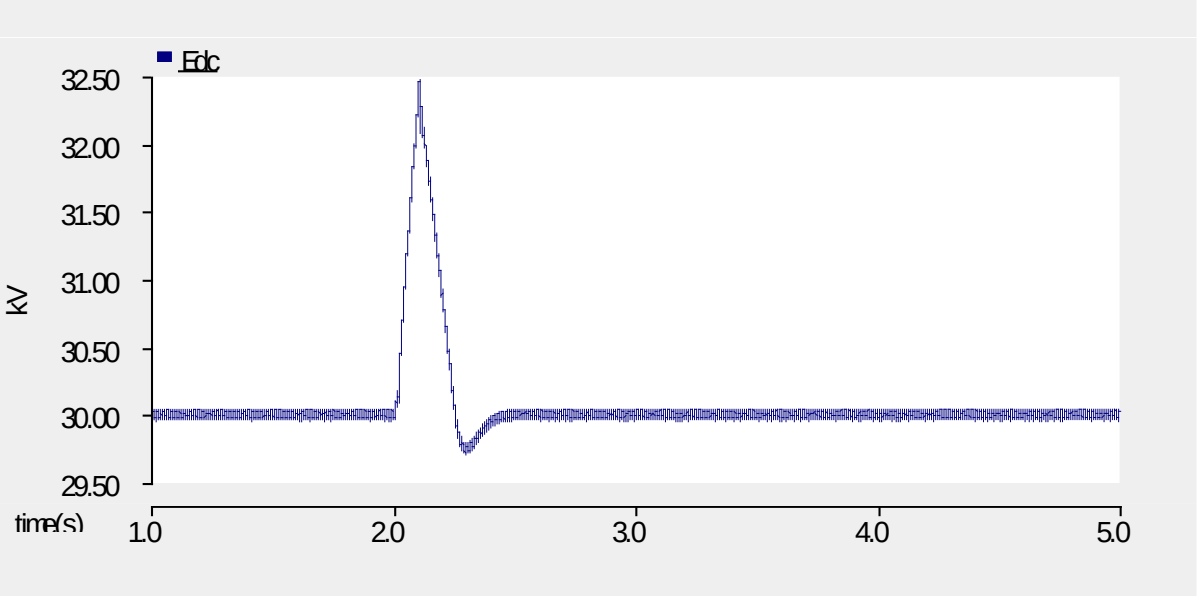

Figure 61: DC bank voltage of EnerNex model during fault scenario

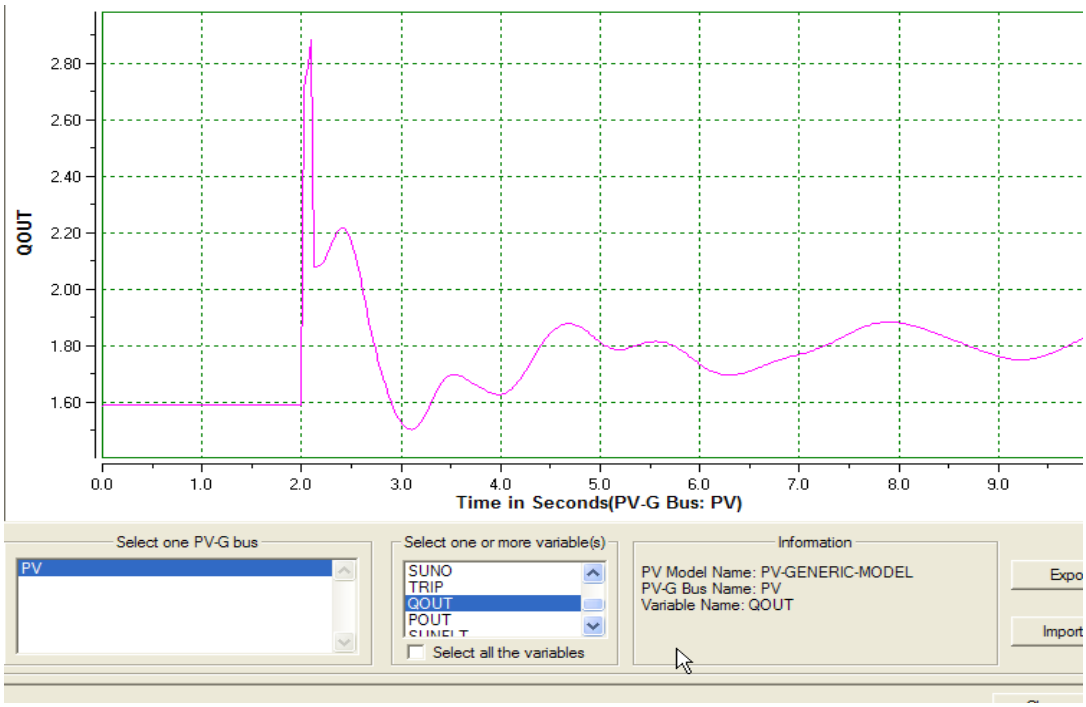

Figure 62: Reactive power output of Power Analytics PV model during fault scenario.

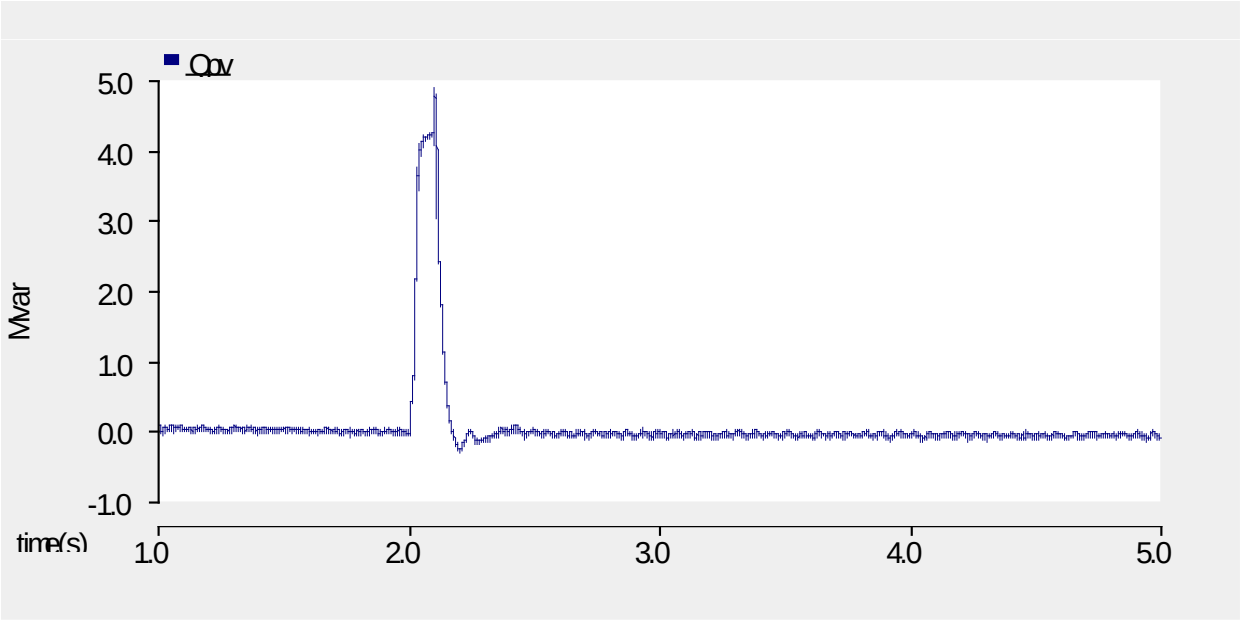

Figure 63: Reactive power output of EnerNex model during fault scenario

2.7.7.13. *PV Model Response to Changing Insolation*

A mutative insolation as shown in Figure 64 is given to the Power Analytics PV module as input. The active power response and reactive power response of the Power Analytics model to

the changing insolation is shown in Figure 65 and Figure 66, respectively. The figures show that the active power and reactive power are both following the trajectory of insolation. The changing power can disturb the power system and which inhibits the system operation. The active power change is inevitable due to the uncontrollable nature of the insolation but the changes of reactive power can be eliminated by a proper designed control strategy.

Similarly, a mutative insolation as shown in Figure 67 is applied to EnerNex PV module. The active power response and reactive power response of the EnerNex model to the changing insolation is shown in Figure 68 and Figure 69, respectively. The figures show that the active power is following the trajectory of the insolation while the reactive power is maintained near zero at all time. The latter reduces the system impact of the PV due to changing insolation.

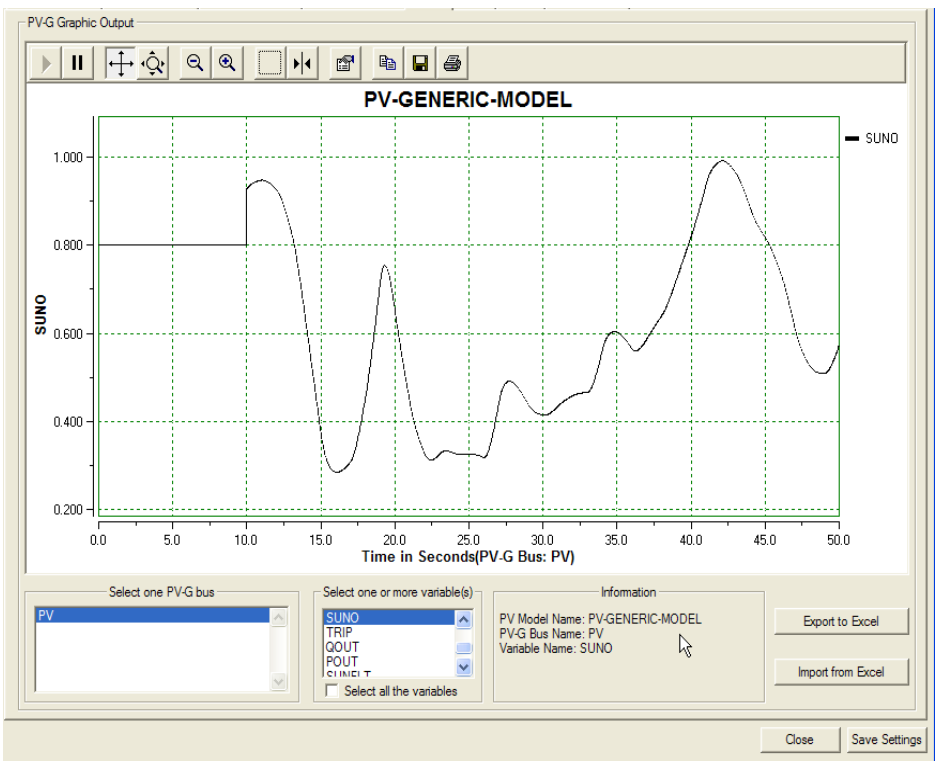

Figure 64: Mutative insolation applied to PV input

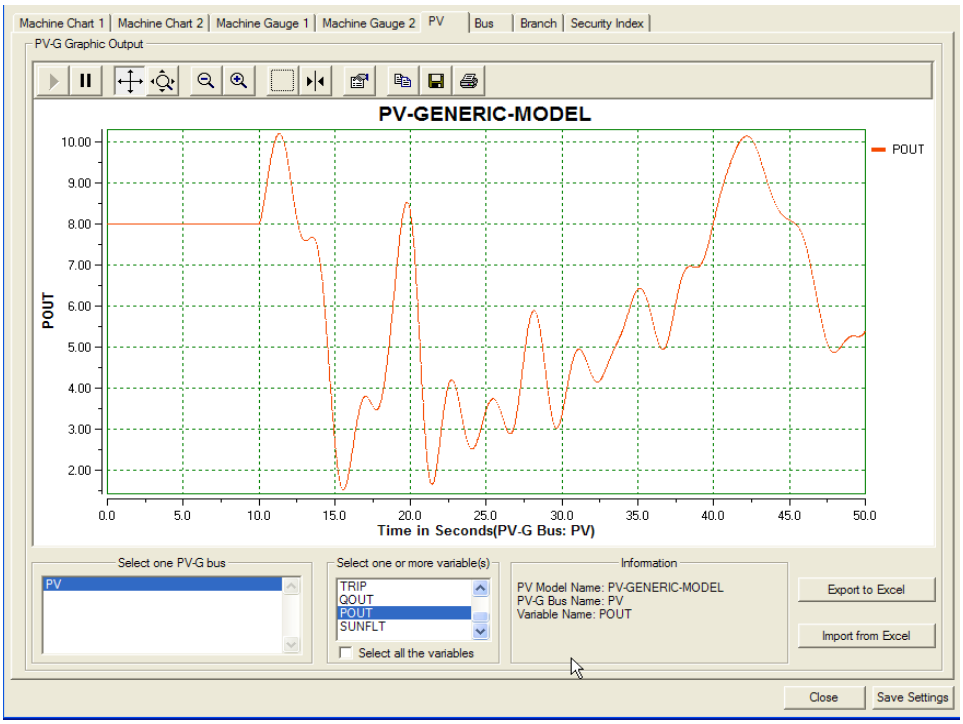

Figure 65: Active power output of Power Analytics model during insolation change scenario

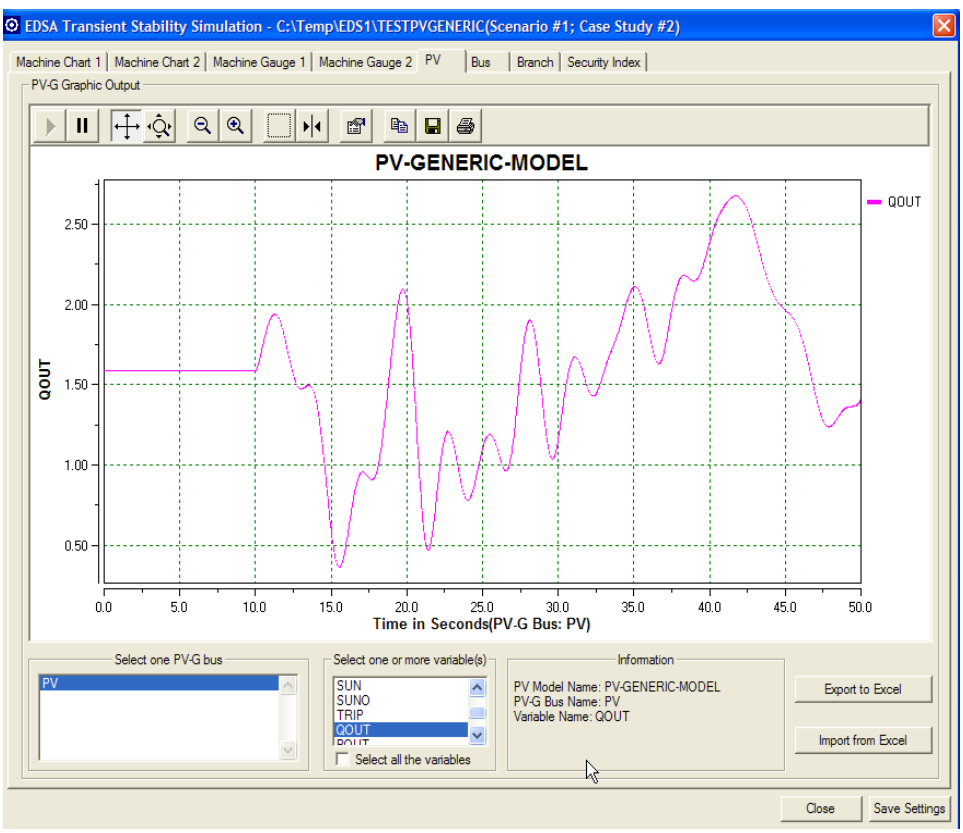

Figure 66: Reactive power output of Power Analytics model during insolation change scenario

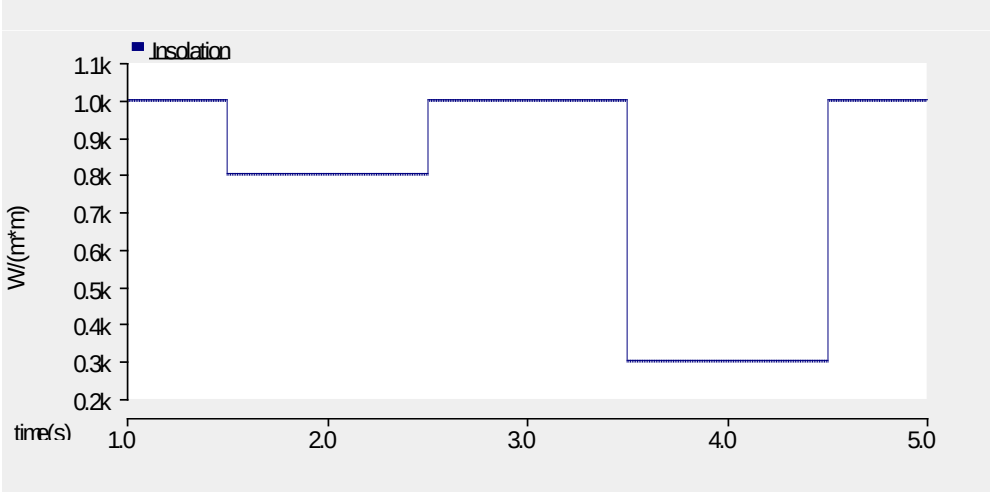

Figure 67: Mutative insolation applied to EnerNex PV module.

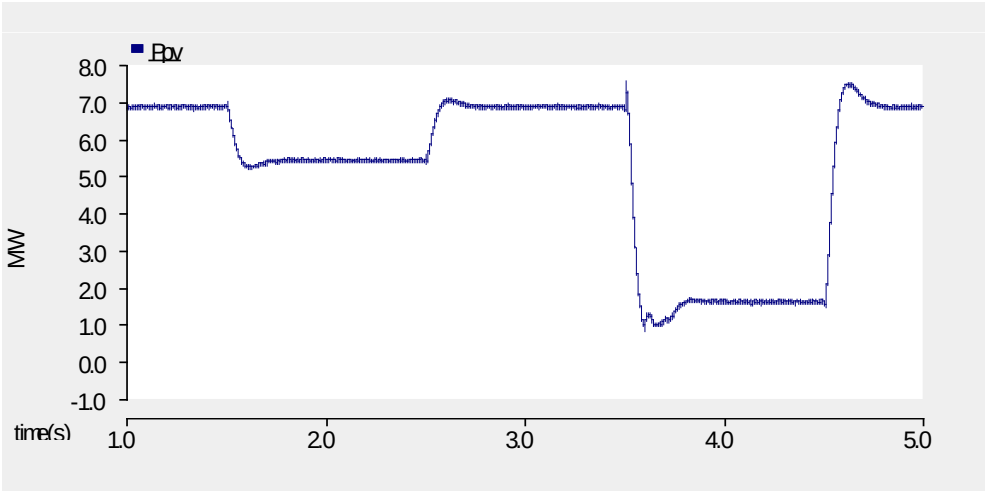

Figure 68: Active power output of EnerNex model during insolation change scenario.

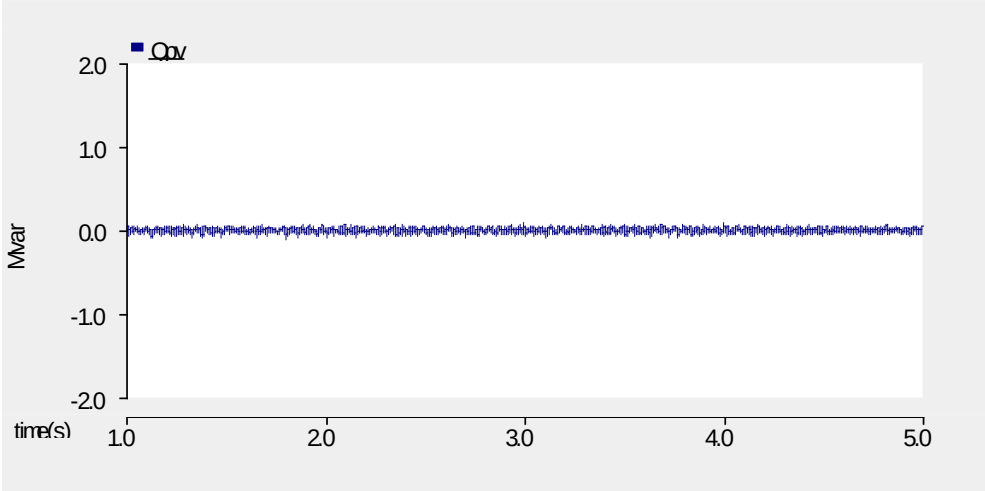

Figure 69: Reactive power output of EnerNex model during insolation change scenario

2.7.7.14. *Additional testing of EnerNex model in PSCAD*

In this section, two additional scenarios are considered to test the performance of EnerNex PV model. The nine-node system is used as the test system and the inverter control parameters are the same as the parameters used in the EnerNex PV model tested in Section 2.7.7.12 and Section 2.7.7.13.

2.7.7.15. *Normal condition*

In this scenario, all the PV generators are initially not in service. At 2 seconds, 42MVAr of PV generation is connected to the PCC, which corresponds to a PV penetration level of about 15%. Figure 70 and Figure 71 show the active power and reactive power, respectively, before and after PV connection. Figure 72 shows the active power and reactive power generated by the PV. The figures show that the active power of conventional generators decrease after the connection of the PV generators since part of the feeder load is supplied by the PV generators. The reactive power from the conventional generators does not change significantly, which makes sense because the PV generators are designed to not generate reactive power during normal operation.

Additionally, the PV inverter controller performance is shown in Figure 73. Vpv is the PCC voltage rms value in per unit, Ppv and Qpv are the AC power output, Iq is the injected current q axis sequence, Id is the injected current d axis sequence, and Edc is the DC bank voltage of PV inverter. It can be seen from Figure 73 that the inverter control is fast and robust.

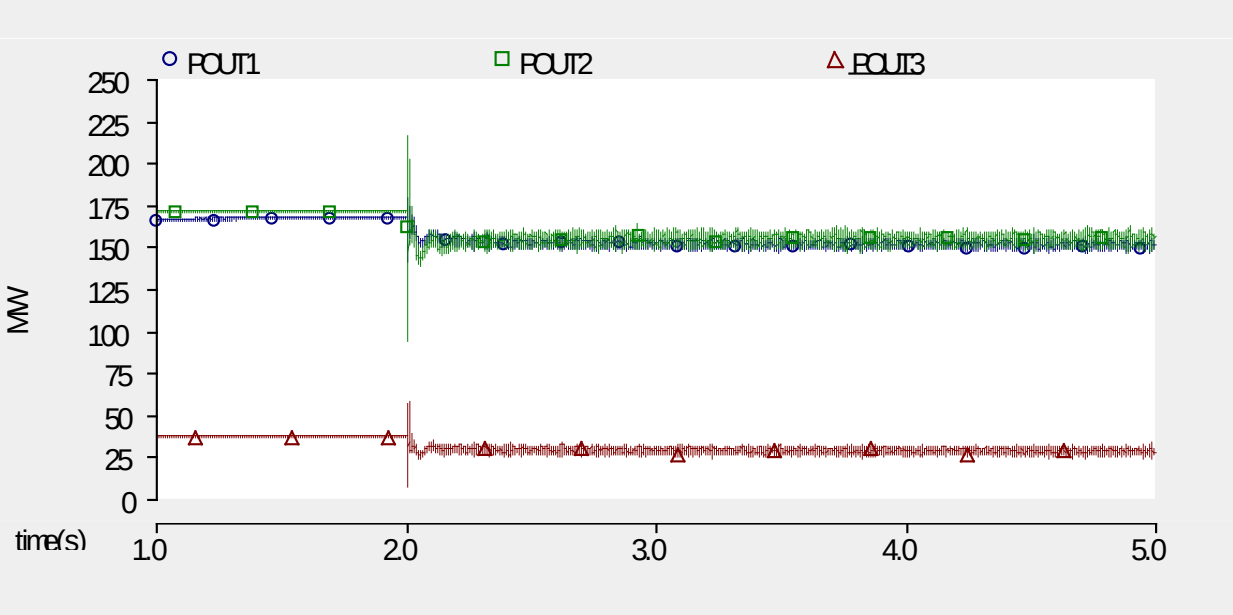

Figure 70: Active power during PV connection.

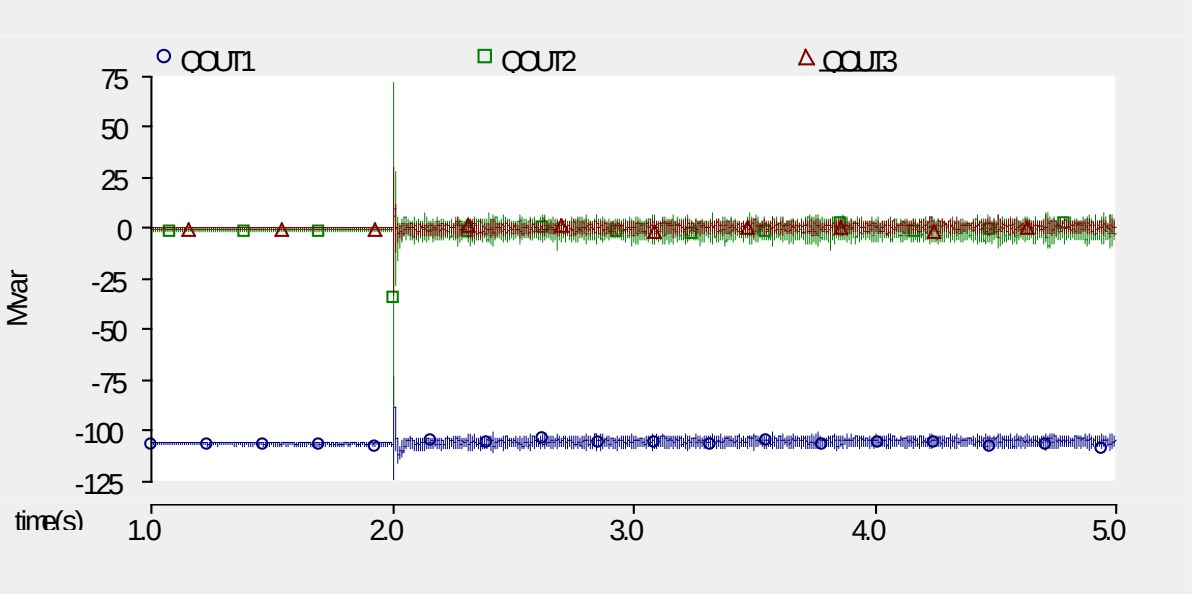

Figure 71: Reactive power during PV connection.

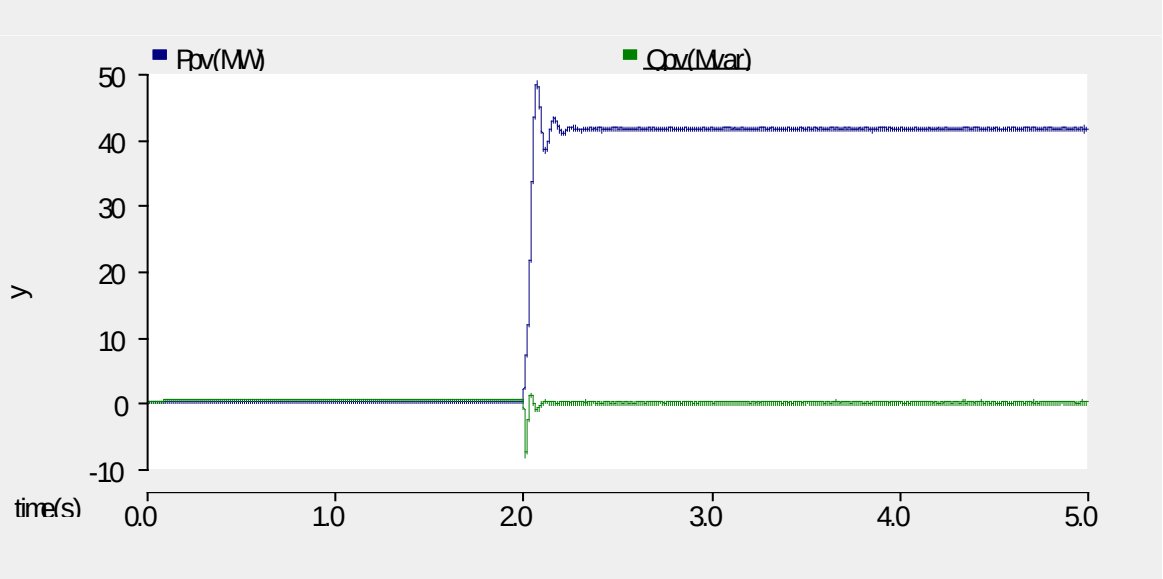

Figure 72: PV output active power and reactive power.

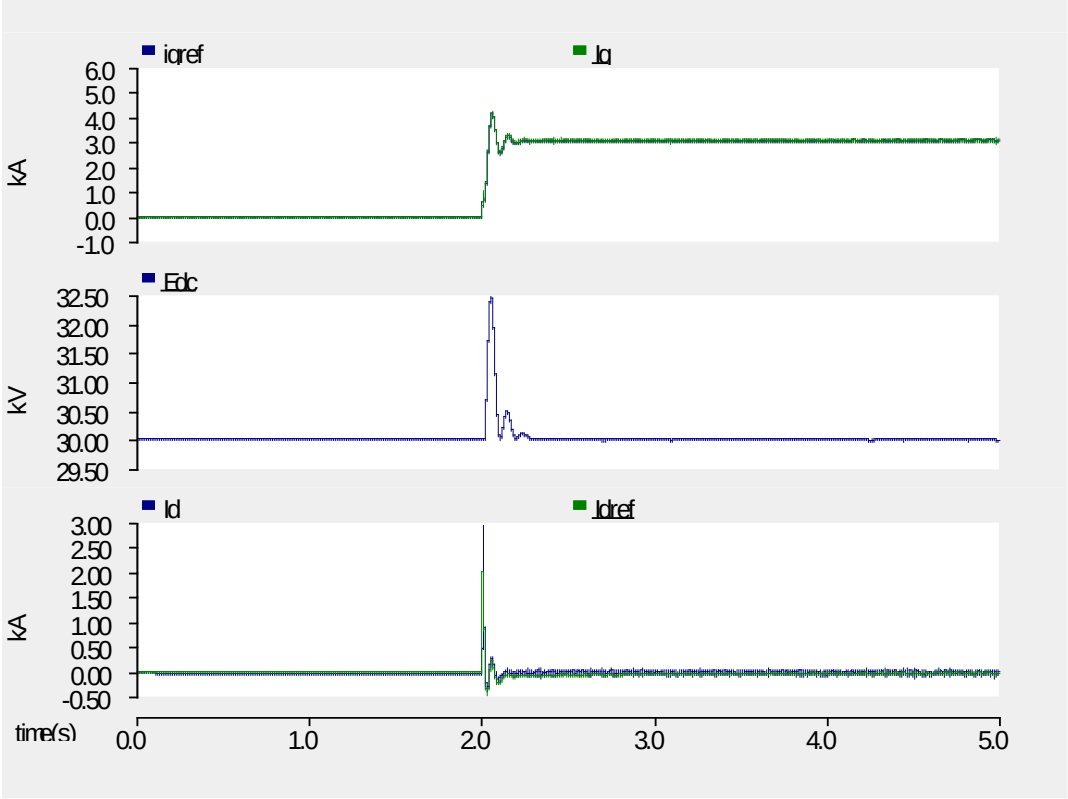

Figure 73: PV inverter controller performance

2.7.7.16. *System contingency*

In this scenario, a three phase fault at bus 6 is applied at 2s, and cleared at 2.1s. Line 06 to 09 is tripped at 2.1s. The PCC voltage rms, PV output power, and PV inverter controller performance are shown in Figure 74, Figure 75 and Figure 76, respectively.

The PV should depend on the fault type. For a local fault, the priority is to control the fault current to avoid overloading the breaker. Therefore, the active power output is minimized as shown in Figure 60. On the other hand, if the fault occurs in a remote area, the continuity of local supply is the first priority. It can be seen from Figure 73 that there is a voltage sag at the PCC bus due to the remote fault, but the voltage rms is still above 0.75 p.u. Also, Figure 75 and Figure 76 show that there is very little change in the active and reactive powers generated by the PV, as desired.

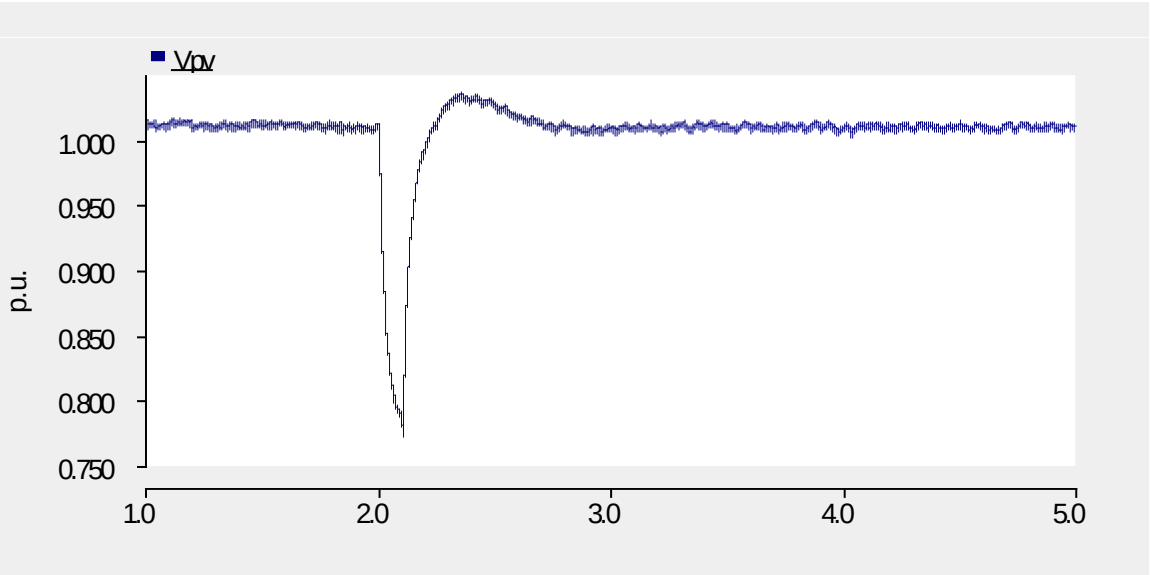

Figure 74: PCC voltage rms

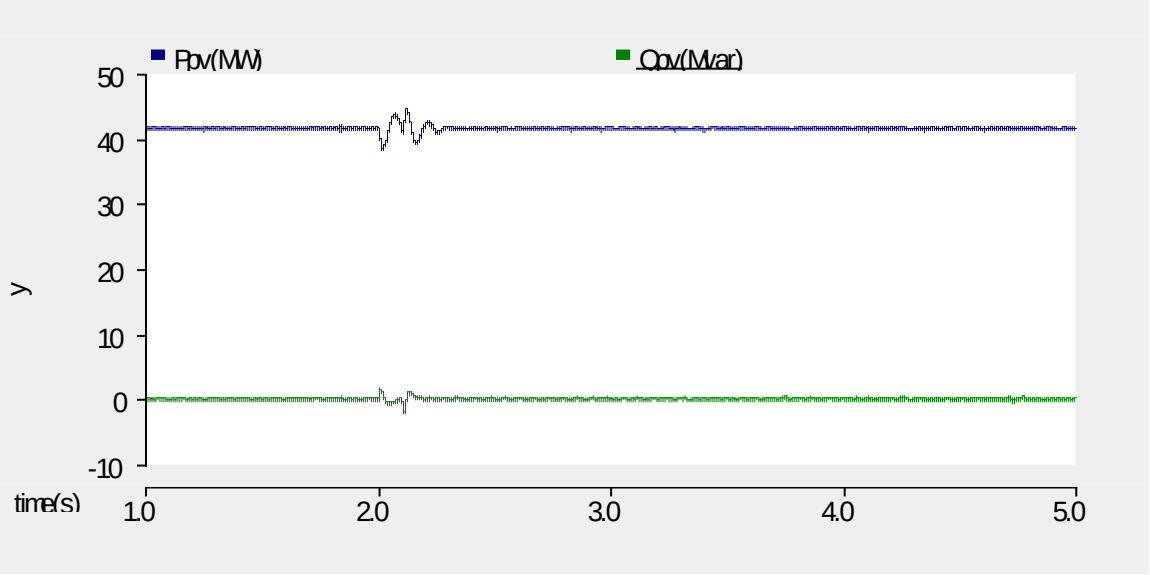

Figure 75: PV output active power and reactive power.

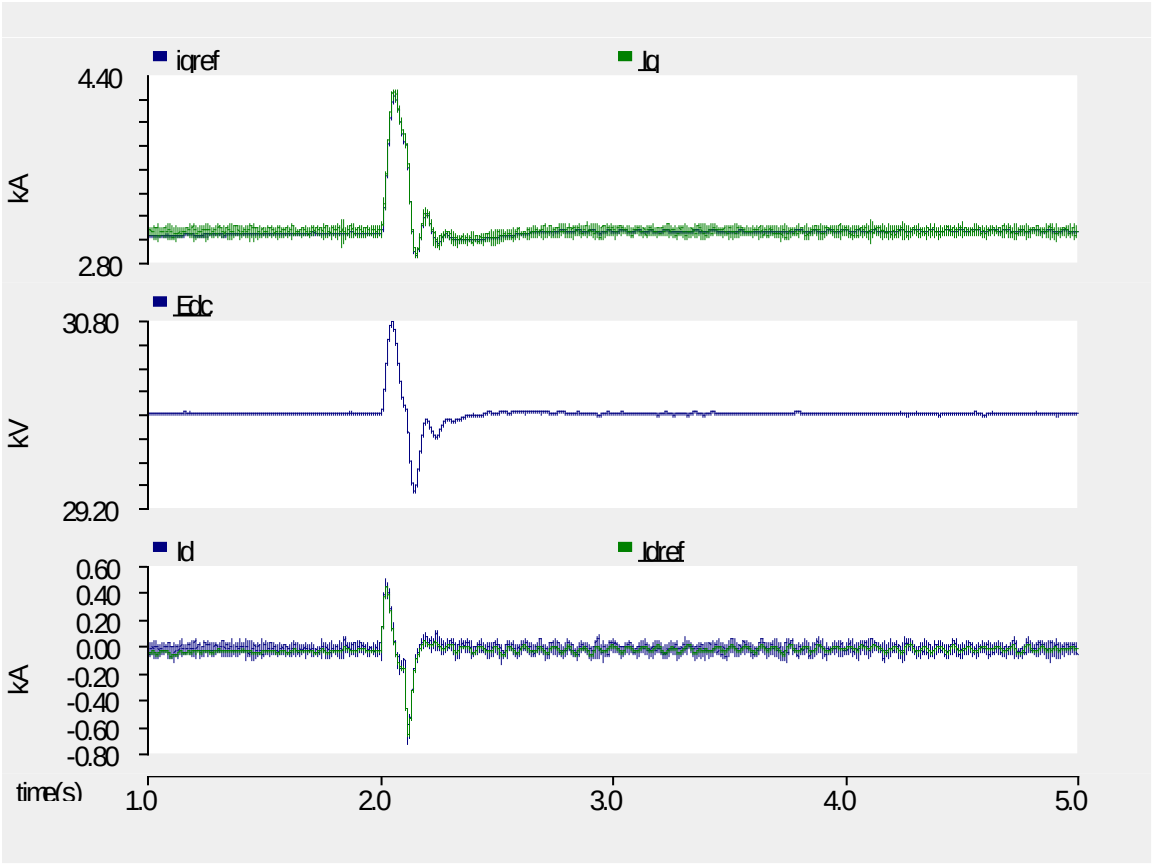

Figure 76: PV Inverter controller performance

2.7.7.17. *Power quality issues*

A mutative radiation is given as an input to the EnerNex PV module as shown in Figure 77. The base value of the irradiation is 800 W/m^2 with a 5 Hz ±200 W/m^2deviation in the interval 2.2s - 2.8s. The PCC voltage in response to the changing insolation is shown in Figure 78, respectively. It can be seen from the figure that changing the input of the PV cell can cause voltage fluctuation. The changing voltage may cause fluctuation of the light intensity, which is perceived by consumers as “flicker”.

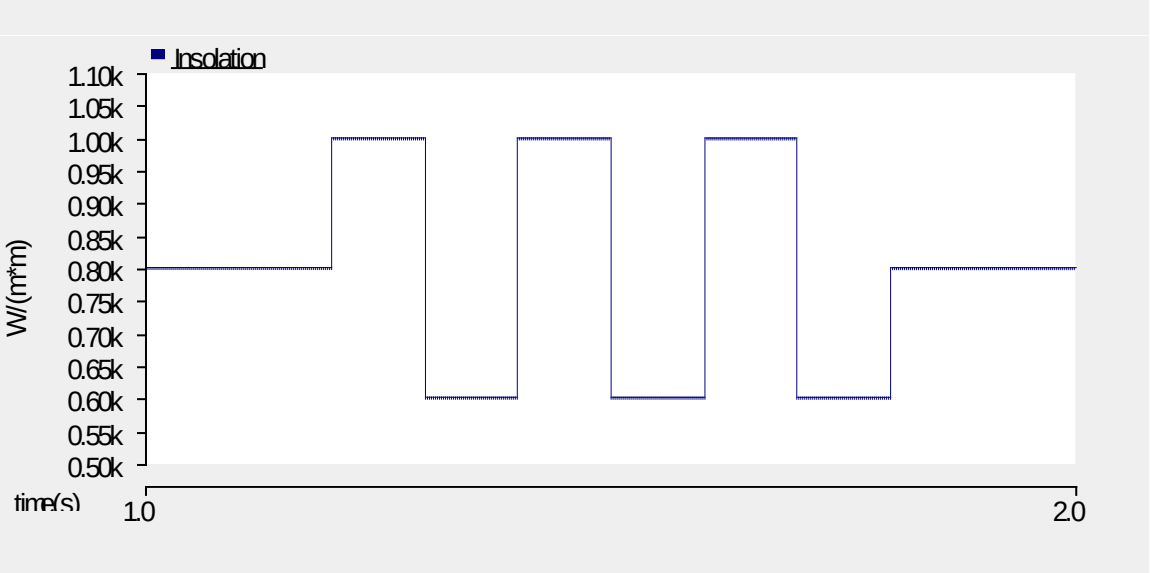

Figure 77: Input radiation of PV cell

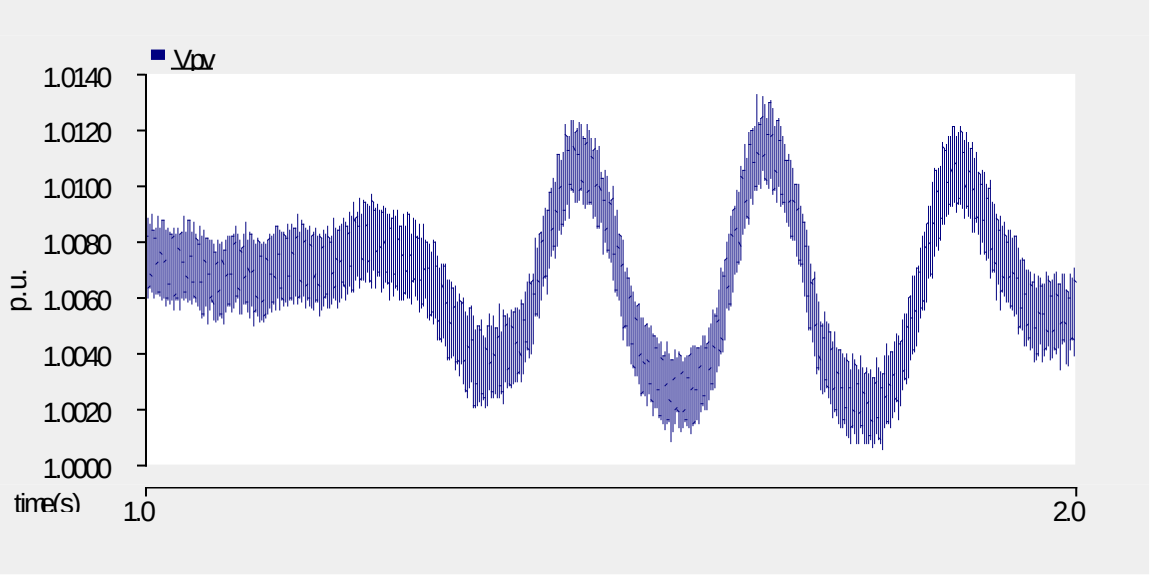

Figure 78: PCC voltage rms in p.u.

2.7.7.18. *Conclusion of Transient Analysis*

We compared the transient response of the Power Analytics DesignBase PV model with the EnerNex PSCAD PV model. Notable differences between these two models are listed below:

- The EnerNex model exhibits more damping of the active power after a fault.

- The EnerNex model controls the reactive power to be zero during normal operation while the Power Analytics model injects reactive power.
- Both, the EnerNex model and the Power Analytics model generate reactive power during a fault. Shortly after the fault is cleared, the reactive power in the EnerNex model goes back to zero while the reactive power in the Power Analytics model fluctuates around the reactive power steady-state value.

In conclusion, the two models behave quite differently during normal operation and in response to faults. The differences are primarily due to different design implementations and do not necessarily reflect on the accuracy of the models. It is important to point out that transient PV models require detailed information of the control scheme and the control parameters of the inverters, which is difficult to obtain from the inverter manufacturer. The results of our comparison underscore the difficulty of accurately capturing the transient response of PV generators to disturbances in a simulation if the aforementioned information is not available.

3.0 Production Readiness Plan

Production Readiness ensures that the microgrid research, design, architecture and implementation can be transferred to commercially available products. The UCSD microgrid controller and related systems are comprised of several components which are already in production including schedulers, Demand Response (DR) programs and data historians. In addition, the microgrid controller is closely related to Energy Management Systems (EMS) currently being commercially deployed for buildings and businesses. Thus the microgrid controller capabilities can be transitioned to existing and emerging products.

3.1. Production Product Requirements

The requirements developed for the UCSD microgrid were mapped to components to ensure proper implementation during product development. Table 22 shows the mapping of requirements to product types. Implementation of the requirements in the product classes specified below will complete transition of the microgrid controller research into commercial products.

Requirement	Microgrid Controller	Scheduler	DR Program	Data Historian
1.0 Optimize Microgrid Operation	•			

Requirement	Microgrid Controller	Scheduler	DR Program	Data Historian
1.1 Balance Reliability and Cost Factors	●	●	●	
2.1 Manage Microgrid for Economic Benefit	●		●	
2.2 Manage Microgrid for Reliability	●	●	●	
3.1 Market Resources	●	●	●	
3.2 Manage Demand	●		●	
3.2.1 Manage Demand Participation	●	●	●	
3.2.2 Manage Demand Automation	●	●	●	
3.3 Manage Storage	●			
3.4 Manage Supply	●	●		
3.5 Incorporate Renewables	●	●	●	
4.1 Manage Thermal Storage	●	●	●	
4.2 Manage Electrical Storage	●	●	●	
4.3 Manage CCHP	●	●	●	
4.4 Manage Gen Sets	●	●	●	
4.5 Manage PV	●	●	●	
4.6 Manage Fuel Cell	●	●	●	
4.7 Manage other DER	●	●	●	
5.1 Security Design	●	●	●	●
5.2 Security Operation	●	●	●	●
5.3 Customer Data Integrity	●	●	●	●
5.4 Utility Data Integrity	●	●	●	●
5.5 Third Party Data Integrity	●	●	●	●
5.6 Customer Data Authentication	●	●	●	●
5.7 Utility Data Authentication	●	●	●	●

Requirement	Microgrid Controller	Scheduler	DR Program	Data Historian
5.8 Third Party Data Authentication	●	●	●	●
5.9 Tamper Proof Pricing Signals	●	●	●	●
5.10 Tamper Proof Transaction Records	●	●	●	●
5.11 Tamper Proof Transaction Date/Time Stamps	●	●	●	●
5.12 Customer Data Confidentiality	●	●	●	●
6.1 Third Party Trusted Relationships	●	●	●	●
6.2 Customer Encrypted Communication Channels	●	●		●
6.3 Third Party Encrypted Communication Channels	●	●	●	●
7.1 Message Time Stamps	●	●	●	●
7.2 Synchronized Time Stamps	●	●	●	●
7.3 Publicly Available System Time Synchronization	●	●	●	●
7.4 External System Time Synchronization	●	●	●	●
7.5 Randomized Start Times	●	●	●	
8.1 Availability	●	●	●	●

Table 22 Requirement to Product Mapping

3.2. Production Product Standardization

The microgrid system modeling and analysis performed by UCSD, Power Analytics and EnerNex is useful to a broad audience. The modeling and analyses research results can and should be forwarded to the Utility Wind Integration Group, soon to be renamed to the Utility

Variable-Generation Integration Group (UVIC). UWIG/UVIG holds regular meetings and is holding a workshop on variable generation forecasting applications to power system operations in February 2012. UWIG/UVIG participants include relevant stakeholders such as the California Independent System Operator (CAISO), commercial firms deploying renewable energy systems nationwide, researchers including UCSD and the Electric Power Research Institute (EPRI), government organizations such as National Renewable Energy Lab (NREL) and Lawrence Berkeley National Lab (LBNL).

Standardization of PV and microgrid models will assist the Western Electricity Coordinating Council (WECC) and other groups in integration of microgrids and renewable energy resources into distribution grids. In particular there is a need for generic PV generation models because most inverter manufacturers are reluctant to release proprietary information on the inverter performance characteristics. The models developed by Power Analytics and verified by EnerNex should be presented to UWIG/UVIG for possible incorporation in the WECC models.

UWIG/UVIG also is active in research and technology rollout for market relevant and economic factors for renewable generation. The results from the microgrid master controller development of economic-based or carbon-based decision algorithms should be briefed to UWIG/UVIG. Commercialization of the microgrid master controller will be assured if it provides economic or carbon reduction advantages.

Dr. Kleissl and his graduate students have attended previous UWIG meetings. A presentation on the results of this project to UWIG/UVIG would allow for widespread dissemination of the knowledge learned and will allow other researchers, national labs and commercial companies to incorporate and leverage project results.

WORKS CITED

[1] IEEE Distribution Planning WG, "Radial Distribution Test Feeders," *Transactions on Power Systems,* vol. 6, no. 3, August 1991.

[2] IEEE Distribution System Analysis Subcommittee, "Radial Distribution Test Feeders," in *IEEE PES Winter Meeting*, 2001.

[3] S. Darie, W. Zhang, J. Pan and L. Liu, "Integration Study, Development of Planning Guideline, Determination of Acceptable Level of Penetration of PV System," Power Analytics, San Diego, CA, May 31, 2011.

[4] R. Gupta, G. Gupta, D. Kastwar, A. Hussain and H. Ranjan, "Modeling and Design of MPPT Controller for a PV module using PSCAD/EMTDC," in *Innovative Smart Grid Technologies Conference Europe*, Gothenburg, October 2010.

[5] P. Anderson and A. Fouad, Power System Control and Stability, 2 ed., IEEE Press Power Engineering Series, October 2002.