Table of Contents

7. Sign Lighting 1
7.1 Overview 1
7.1.1 History and Background 1
7.1.2 Scope and Application 1
7.1.3 Summary of Requirements 2
7.2 Mandatory Measures 2
7.2.1 Certification Requirements for Lighting Control Devices 3
7.2.2 Title 20 Certification Requirements for Lighting Control Devices 3
7.2.3 Using Lighting Control Systems to Comply with the Standards 5
7.2.4 Determining Sign Lighting Installed Power 6
7.3 Required Sign Lighting Controls 7
7.3.1 Indoor Sign Lighting Controls 7
7.3.2 Outdoor Sign Lighting Controls 7
7.3.3 Demand Responsive Lighting Controls for Electronic Message Centers 8
7.4 Sign Lighting Energy Requirements 8
7.4.1 Scope of Sign Lighting Energy Requirements 8
7.4.2 Applications Excluded from Sign Lighting Energy Requirements 9
7.4.3 Lighting Energy Compliance Options 9
7.4.4 Hybrid Signs 12
7.5 Additions and Alterations 15
7.5.1 Sign Alterations 15
7.6 Energy Compliance Documentation 16
7.6.1 Overview 16
7.6.2 Sign Lighting Inspection 16
7.6.3 Two Combined SLTG Document 17
7.6.4 Explanation of Compliance Document Numbering System 17
7.6.5 Lighting Control Systems Installation Certificate 17

7. Sign Lighting

7.1 Overview

This chapter discusses the requirements for sign lighting in the Building Energy Efficiency Standards (Energy Standards). They set minimum control requirements, maximum allowable power levels and minimum efficacy requirements. They conserve energy, reduce peak electric demand, and are technically feasible and cost effective.

The Energy Standards do not allow trade-offs between sign lighting power allowances and other end uses including outdoor lighting, indoor lighting, HVAC, building envelope, or water heating.

7.1.1 History and Background

Regulations for lighting have been in effect in California since 1977. However, until the adoption of the 2005 Energy Standards, they only addressed indoor lighting, inside spaces that were air conditioned or heated, and outdoor lighting that was connected to a lighting panel when the lighting panel was located inside a conditioned building. The 2005 Standards expanded the scope to include most outdoor lighting applications, indoor and outdoor sign lighting applications, and indoor lighting applications in unconditioned buildings. After the 2005 Standards, the Sign Lighting Standards were updated with the 2008 Energy Standards.

The 2016 Sign Lighting Standards evolved over a three year period through a dynamic and open public process. The Energy Commission solicited ideas, proposals, and comments from a number of interested parties. The Energy Commission encouraged all interested persons to participate in a series of public hearings and workshops through which it gathered information and viewed presentations on energy efficiency possibilities from a variety of perspectives. A consulting team was hired, which included a number of nationally recognized lighting experts to assist in the development of the Energy Standards.

7.1.2 Scope and Application

The 2016 Sign Lighting Standards address both indoor and outdoor signs. The Energy Standards include control requirements for all illuminated signs (§130.3) and establish lighting power requirements for internally illuminated and externally illuminated signs (§140.8).

The Sign Lighting Standards are the same throughout the state and are independent of outdoor Lighting Zones.

The Sign Lighting Standards are the same in conditioned and unconditioned spaces.

7.1.3 Summary of Requirements

§110.9, §130.0, §130.3, §140.8 and §141.0

7.1.3.1 Mandatory Measures

The Energy Standards require that indoor and outdoor sign lighting be automatically controlled.

In brief, the mandatory sign lighting requirements include:

- Automatic shutoff controls.
- Dimming controls.
- Demand responsive controls for electronic message centers.

All lighting controls must meet the requirements of §110.9 as applicable. Most lighting controls must be certified by the manufacturer to the Energy Commission and are required to be listed in the Energy Commission directories. Additionally, self-contained lighting control devices are now regulated by the Title 20 Appliance Efficiency Regulations. More details on the mandatory measures are provided in Section 7.2 of this chapter.

7.1.3.2 Sign Lighting Power

Sign Lighting Standards apply to both indoor and outdoor signs and contain two different prescriptive compliance options:

1. The watt per square foot approach specifies a maximum lighting power that can be installed, expressed in W/ft² of sign area.
2. The specific technology approach specifies that the signs shall be illuminated with efficient lighting sources (electronic ballasts, high efficacy lamps, efficient power supplies and efficient transformers).

More details on the sign lighting power requirements are provided in Section 7.3 of this chapter.

7.2 Mandatory Measures

The mandatory features and devices are required for all sign lighting projects as applicable. The mandatory measures require that lighting controls are certified by the manufacturers to the Energy Commission, and that sign lighting systems have controls for efficient operation. Mandatory features also set requirements for how lighting systems are classified according to technology, and how to calculate installed wattage.

Mandatory measures for signs are specified in §110.9, §130.0, and §130.3. These mandatory measures for signs are similar to the mandatory measures for the other indoor and outdoor lighting Standards.

Note: For projects that involve building plans, the person with overall responsibility must ensure that the Mandatory Measures that apply to the project are listed on the plans. The format of the list is left to the discretion of the Principal Designer.

7.2.1 Certification Requirements for Lighting Control Devices

§110.0(b)

The Energy Standards limit the installation of lighting control devices and systems as follows:

A. For all lighting control devices that are within the scope of Section 1601 of the Appliance Efficiency Regulations, installation shall be limited to those that have been certified to the Energy Commission by the manufacturer, pursuant to the provisions of Title 20 California Code of Regulations, §1606.

B. For lighting control devices required to be certified to the Energy Commission that are not regulated by Title 20, installation shall be limited to those certified by the manufacturer in a declaration that is executed under penalty of perjury under the laws of the State of California that states:

- All the information provided pursuant to the certification is true, complete, accurate and in compliance with all applicable requirements of the Energy Standards.
- The equipment, product, or device was tested using the applicable test method specified in the Energy Standards.

See Chapter 5 of this manual for additional information about the requirements for lighting control devices and lighting control systems.

7.2.2 Title 20 Certification Requirements for Lighting Control Devices

§110.1

Any lighting control device regulated by the Appliance Efficiency Regulations, Title 20 California Code of Regulations, §1601 et seq., may be installed only if the appliance fully complies with Section 1608(a) of those regulations. The Title 20 regulations apply to appliances that are sold or offered for sale in California, except those sold wholesale in California for final retail sale outside the state and those designed and sold exclusively for use in recreational vehicles or other mobile equipment.

Once a device is certified, it will be listed in the Directory of Lighting Control Devices, which is available here: http://www.energy.ca.gov/appliances/database/

Call the Energy Hotline at 1-800-772-3300 to obtain more information.

Self-contained lighting control devices are defined by the Energy Standards, and by the Appliance Efficiency Regulations, as unitary lighting control modules that require no additional components to be fully functional lighting controls.

Self-contained lighting controls required for compliance with the Energy Standards are required to be certified by the manufacturer according to the Title 20 Appliance Efficiency Regulations. The following are types of lighting controls that are required to be certified to the Energy Commission in accordance with Title 20:

A. **Time-Switch Lighting Controls**

- Automatic Time-Switch Controls
- Astronomical Time-Switch Controls
- Multi-Level Astronomical Time-Switch Controls
- Outdoor Astronomical Time-Switch Controls

B. **Daylighting Controls**

- Automatic Daylight Controls
- Photo Controls

C. **Dimmers**

D. **Occupant Sensing Controls**

- Occupant Sensors
- Motion Sensors
- Vacancy Sensors

7.2.2.1 Demand Responsive Lighting Controls

The following information is for Electronic Message Centers when they are required to have demand responsive controls according to §130.3(a)3.

A. Definitions - The following are definitions from §100.1:

1. DEMAND RESPONSE is short-term changes in electricity usage by end-use customers, from their normal consumption patterns. Demand response may be in response to:
   - Changes in the price of electricity; or
   - Participation in programs or services designed to modify electricity use.
     - In response to wholesale market prices.
     - When system reliability is jeopardized.
2. DEMAND RESPONSE PERIOD is a period of time during which electricity loads are modified in response to a demand response signal.
3. DEMAND RESPONSE SIGNAL is a signal sent by the local utility, Independent System Operator (ISO), or designated curtailment service provider or aggregator, to a customer, indicating a price or a request to modify electricity consumption, for a limited time period.
4. DEMAND RESPONSIVE CONTROL is a kind of control that is capable of receiving and automatically responding to a demand response signal.

B. Demand Responsive Controls and Equipment.

§130.5(e)

Demand responsive controls and equipment shall be capable of receiving and automatically responding to at least one standards-based messaging protocol which enables demand response after receiving a demand response signal.

7.2.3 Using Lighting Control Systems to Comply with the Energy Standards

Lighting Control Systems are defined by the Energy Standards as requiring two or more components to be installed in the building to provide all of the functionality required to make up a fully functional and compliant lighting control. Compliant lighting control systems are those that meet all of the applicable requirements.

A. A lighting control system shall comply with all requirements listed below, and all components of the system considered together as installed shall meet all applicable requirements for the lighting control application for which they are installed:

- Before a lighting control system, including an energy management control system (EMCS), can be recognized for compliance with the lighting control requirements in the Energy Standards, the person who is eligible under Division 3 of the Business and Professions Code to accept responsibility for the construction or installation of features, materials, components, or manufactured devices shall sign and submit an Installation Certificate (§130.4(b) 1 and 2).
- If any of the requirements in the Installation Certificate fail the installation tests, the Lighting Control System (or EMCS) shall not be recognized for compliance with the Energy Standards.
- If there are indicator lights that are integral to a lighting control system, they shall consume no more than one watt of power per indicator light (§110.9(a)5).
- A lighting control system shall meet all of the requirements in the Title 20 Appliance Efficiency Regulations for each of the identical self-contained lighting control devices that it is installed to function as.

B. The following are the Title 20 requirements for lighting control devices that lighting control systems installed to comply with the Energy Standards must meet:

1. **Automatic Time-Switch Controls**. Commercial automatic time-switch controls labeled for use with lighting shall:
   - Have program backup capabilities that prevent the loss of the device's schedule for at least 7 days, and the device's date and time for at least 72 hours if power is interrupted.
   - Be capable of providing manual override to each connected load and shall resume normally scheduled operation after manual override is initiated within 2 hours for each connected load.
   - Incorporate an automatic holiday shutoff feature that turns off all connected loads for at least 24 hours and then resumes normally scheduled operation.
2. **Astronomical Time-Switch Controls**. Astronomical time-switch controls shall:
   - Meet the requirements of an automatic time-switch control.
   - Have sunrise and sunset prediction accuracy within plus-or-minus 15 minutes and timekeeping accuracy within 5 minutes per year.
   - Be capable of displaying date, current time, sunrise time, sunset time, and switching times for each step during programming.
   - Have an automatic daylight savings time adjustment.
   - Have the ability to independently offset the on and off for each channel by at least 99 minutes before and after sunrise or sunset.

3. **Automatic Daylight Controls.** Automatic daylight controls shall:
   - Be capable of reducing the power consumption in response to measured daylight either directly or by sending and receiving signals.
   - Comply with Section 1605.3(l)(2)(F) of Title 20 if the day lighting control is capable of directly dimming lamps.
   - Automatically return to its most recent time delay settings within 60 minutes when put in calibration mode.
   - Have a set point control that easily distinguishes settings to within 10 percent of full scale adjustment.
   - Have a light sensor that has a linear response within 5 percent accuracy over the range of illuminance measured by the light sensor.
   - Have a light sensor that is physically separated from where the calibration adjustments are made, or is capable of being calibrated in a manner that the person initiating the calibration is remote from the sensor during calibration to avoid influencing calibration accuracy.
   - Comply with Section 1605.3(l)(2)(E) of Title 20 if the device contains a photo control component.
4. **Photo Controls**. Photo controls shall not have a mechanical device that permits disabling of the control.
5. **Dimmer Controls.** All dimmer controls shall:
   - Be capable of reducing power consumption by a minimum of 65 percent.
   - Include an off position which produces a zero lumen output.
   - Not consume more than 1 watt per lighting dimmer switch leg when in the off position.
   - Dimmer controls that can directly control lamps shall provide electrical outputs to lamps for reduced flicker operation through the dimming range so that the light output has an amplitude modulation of less than 30 percent for frequencies less than 200 Hz without causing premature lamp failure.
   - Wall box dimmers and associated switches designed for use in three way circuits shall be capable of turning lights off, and to the level set by the dimmer if the lights are off.

7.2.4 Determining Sign Lighting Installed Power

§130.0(c)

The lighting wattage of signs shall be determined in accordance with the applicable provisions of §130.0(c). Note that the installed wattage of sign lighting is not considered when using the Alternate Lighting Source compliance option in §140.8(b). See Section 7.4 of this chapter for more information about sign lighting energy requirements.

Following are the most common sign lighting requirements for determining luminaire classification and power:

1. The wattage of luminaires with line voltage lamp holders not containing permanently installed ballasts or transformers shall be the maximum relamping rated wattage of the luminaire, and for recessed luminaires with line-voltage medium screw base sockets, wattage shall not be less than 50 watts per socket.
2. Screw-based adaptors shall not be used to convert an incandescent luminaire to any type of non-incandescent technology. Screw-based adaptors, including screw-base adaptors classified as permanent by the manufacturer, shall not be recognized for compliance with the Energy Standards.
3. The wattage of luminaires with permanently installed or remotely installed ballasts or drivers shall be the operating input wattage of the rated lamp/ballast combination published in ballast manufacturer's catalogs based on independent testing lab reports as specified by UL 1598.
4. The wattage of luminaires and lighting systems with permanently installed or remotely installed transformers shall be the rated wattage of the lamp/transformer combination.
5. The wattage of light emitting diode (LED) luminaires, and LED light engines shall be the maximum rated input wattage of the system when tested in accordance with IES LM-79-08.
    - An LED lamp, integrated or non-integrated type in accordance with the definition in ANSI/IES RP-16-2010, shall not be classified as a LED lighting system for compliance with Part 6. LED modules having screw-bases including, but not limited to, screw based pig-tails, screw-based sockets, or screw-based adaptors shall not be recognized as a LED lighting system for compliance with Part 6.

The rules for determining lighting wattage are discussed in greater detail in Chapter 5 of this manual.

7.3 Required Sign Lighting Controls

7.3.1 Indoor Sign Lighting Controls

§130.3(a)1

All indoor sign lighting is required to be controlled with an automatic time-switch control or astronomical time-switch control.

These controls are required to meet the minimum requirements in §110.9. See Section 7.2 of this chapter for information on the minimum requirements for lighting controls.

7.3.2 Outdoor Sign Lighting Controls

§130.3(a)2

Outdoor sign lighting is required to meet the following requirements as applicable:

A. All outdoor sign lighting is required to be controlled with one of the following two options:
    1. A photocontrol in addition to an automatic time-switch control.
    2. An astronomical time-switch control.

These controls are required to meet the minimum requirements in §110.9. See Section 7.2 of this chapter for information on the minimum requirements for lighting controls.

EXCEPTION to §130.3(a)2A: Lighting for outdoor signs in tunnels, and for signs in large permanently covered outdoor areas that are intended to be continuously lit for 24 hours per day and 365 days per year.

B. All outdoor sign lighting that is ON both day and night shall be controlled with a dimmer that provides the ability to automatically reduce sign lighting power by a minimum of 65 percent during nighttime hours.

Signs that are illuminated at night and for more than 1 hour during daylight hours shall be considered ON both day and night.

EXCEPTION to §130.3(a)2B: Lighting for outdoor signs in tunnels and large covered areas that are intended to be illuminated both day and night.

7.3.3 Demand Responsive Lighting Controls for Electronic Message Centers

An Electronic Message Center (EMC) that has a new connected lighting power load of greater than 15 kW shall have a control installed that is capable of reducing the lighting power by a minimum of 30 percent when receiving a demand response signal.

EXCEPTION to §130.3(a)3: Lighting for an EMC that is not permitted by a health or life safety statute, ordinance, or regulation to be reduced by 30 percent is not required to be capable of reducing the lighting power when receiving a demand response signal.

Example 7-1

Question

Because the Energy Standards require sign lighting to be controlled by an automatic time switch control, will a sign on the inside of a mall be required to be turned off during the day?

Answer

No, the signs will not be required to be turned off during the day. The automatic time switch control will allow the owner/occupant to program their signs to be automatically turned on and off in accordance with their particular needs.

7.4 Sign Lighting Energy Requirements

7.4.1 Scope of Sign Lighting Energy Requirements

The Sign Lighting Energy Requirements apply to all internally illuminated signs, externally illuminated signs, unfiltered light emitting diodes (LEDs), and unfiltered neon, whether used indoors or outdoors. Examples include cabinet signs, channel letters, lightboxes, backlit signs, illuminated billboards, and electronic message centers.

7.4.2 Applications Excluded from Sign Lighting Energy Requirements

§140.8

The following sign lighting applications are not required to comply with the sign lighting energy requirements:

1. Unfiltered incandescent lamps that are not part of an electronic message center (EMC), an internally illuminated sign, or an externally illuminated sign.

   This exception applies only to portions of a sign that are unfiltered incandescent lamps. An unfiltered sign is defined in the Energy Standards as a sign where the viewer perceives the light source directly as the message, without any colored filter between the viewer and the light source. Although internally illuminated signs are mentioned in this exception, it is only those portions of a hybrid sign consisting of unfiltered incandescent lamps that are excluded from the sign lighting energy requirements

2. Exit signs.

   However, exit signs are required to meet the requirements of the Appliance Efficiency Regulations.

3. Traffic Signs.

   However, traffic signs are required to meet the requirements of the Appliance Efficiency Regulations.

7.4.3 Lighting Energy Compliance Options

There are two options available for complying with the sign lighting energy requirements:

Option 1 - Maximum Allowed Lighting Power (Watts per square foot Approach).

Option 2 - List of Compliant Alternate Lighting Sources.

7.4.3.1 Option 1: Maximum Allowed Lighting Power

§140.8(a)

This option for complying with the sign lighting energy requirements is also known as the watts per square foot approach. When using this option, there are rules in the Energy Standards for classifying the lighting technology used, and for determining sign lighting power. Additional information about Sign Lighting Installed Wattage is in Section 7.2.4 of this chapter.

The maximum allowed lighting power is different for internally illuminated signs and for externally illuminated signs, as follows:

A. For internally illuminated signs, the maximum allowed lighting power shall not exceed the product of the illuminated sign area and 12 watts per square foot of the illuminated sign area (see Figures 7-1 and 7-2 below). For double-faced signs, only the area of a single face shall be used to determine the allowed lighting power (see Figure 7-3 below).

   Internally illuminated signs are defined in the Energy Standards as signs that are illuminated by a light source that is contained inside a sign where the message area is luminous, including cabinet signs and channel letter signs.

B. For externally illuminated signs, the maximum allowed lighting power shall not exceed the product of the illuminated sign area and 2.3 watts per square foot of the illuminated sign area. Only areas of an externally lighted sign that are illuminated without obstruction or interference, by one or more luminaires, shall be used.

   Externally illuminated signs are defined in the Energy Standards as any sign or a billboard that is lit by a light source that is external to the sign directed towards and shining on the face of the sign.

C. Lighting for unfiltered light emitting diodes (LEDs) and unfiltered neon are not required to comply with the maximum allowed lighting power option, but are required to comply with the alternate lighting source compliance method.

Figure 7-1: Multi-faced Sign

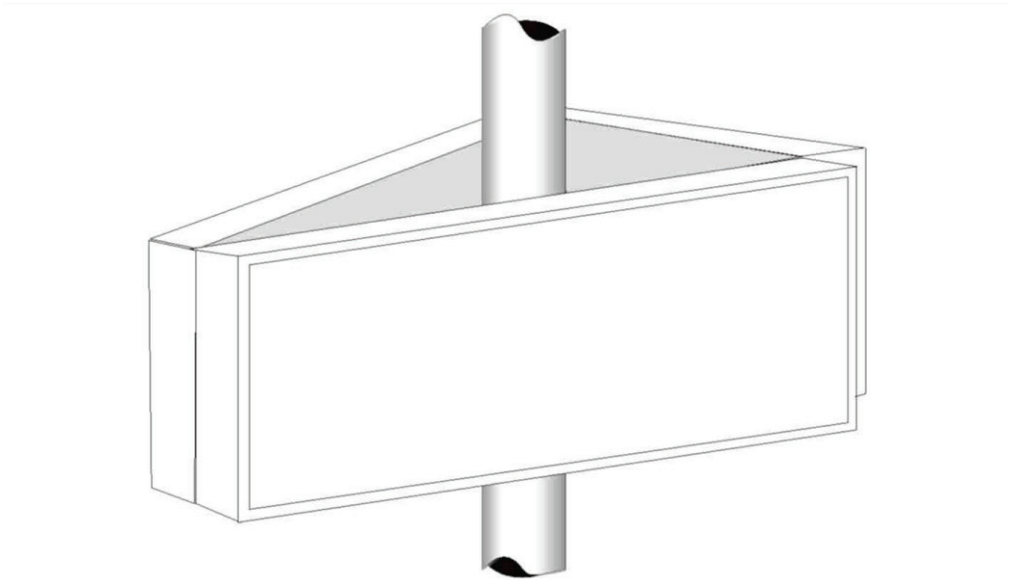

Include area from each face when separated by an opaque divider

Figure 7-2: Single-faced Internally Illuminated Cabinet Sign with Fluorescent Lamps and Translucent Face

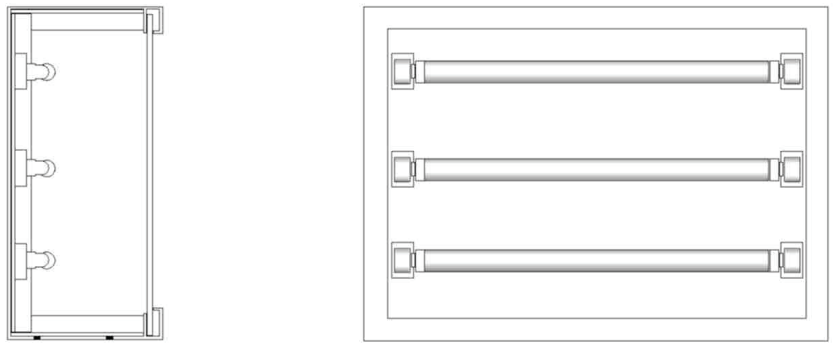

Figure 7-3: Double-faced Internally Illuminated Cabinet Sign with Fluorescent Lamps and Translucent Faces

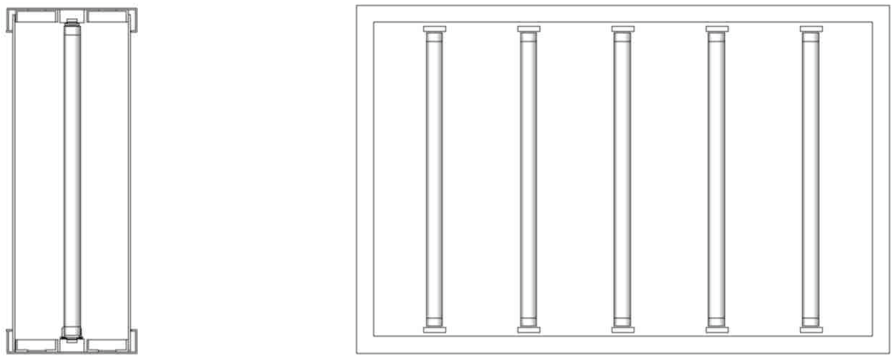

7.4.3.2 Option 2 – List of Compliant Alternate Lighting Sources

§140.8(b)

This option for complying with the sign lighting energy requirements is to use only lighting technologies on the list of compliant lighting sources. When using this option for compliance, there is no requirement to calculate lighting power.

A. List of Compliant Alternate Lighting Sources - A sign complies if it is equipped only with one or more of the following light sources:

1. High pressure sodium lamps.
2. Metal halide lamps that are:
   - Pulse start or ceramic served by a ballast that has a minimum efficiency of 88 percent or greater, or

- Pulse start that are 320 watts or smaller, are not 250 watts or 175 watts, and are served by a ballast that has a minimum efficiency of 80 percent.

  Ballast efficiency is the measured output wattage to the lamp divided by the measured operating input wattage when tested according to ANSI C82.6-2005.

3. Neon or cold cathode lamps with transformer or power supply efficiency greater than or equal to one of the following:
   - A minimum efficiency of 75 percent when the transformer or power supply rated output current is less than 50 mA.
   - A minimum efficiency of 68 percent when the transformer or power supply rated output current is 50 mA or greater.

     The ratio of the output wattage to the input wattage is at 100 percent tubing load.
4. Fluorescent lighting systems meeting one of the following requirements:
   - Use only lamps with a minimum color rendering index (CRI) of 80.
   - Use only electronic ballasts with a fundamental output frequency not less than 20 kHz.
5. Light emitting diodes (LEDs) with a power supply having an efficiency of 80 percent or greater.

   EXCEPTION to §140.8(b)5: Instead of requiring a power supply with an efficiency of 80 percent or greater, single voltage external power supplies that are designed to convert 120 volt AC input into lower voltage DC or AC output, and which have a nameplate output power less than or equal to 250 watts, shall be certified to comply with the applicable requirements for external power supplies in the Appliance Efficiency Regulations
6. Compact fluorescent lamps that do not contain a medium screw base sockets (E24/E26).

7.4.4 Hybrid Signs

A sign may consist of multiple components, where some components are regulated, and some components are not regulated. For example, a single sign structure may have a regulated internally illuminated cabinet, plus regulated externally illuminated letters which are attached to a brick pedestal, plus unregulated unfiltered incandescent “chaser” lamps forming an illuminated arrow. For example, Figure 7-4 shows an arrow which is not part of an electronic message center (EMC) using unfiltered incandescent lamps.

If the lamps are not covered by a lens, then only the control regulations (§130.3) apply to the sign. This type of unfiltered incandescent sign is not regulated by §140.8.

Figure 7-4: Unfiltered Incandescent Sign

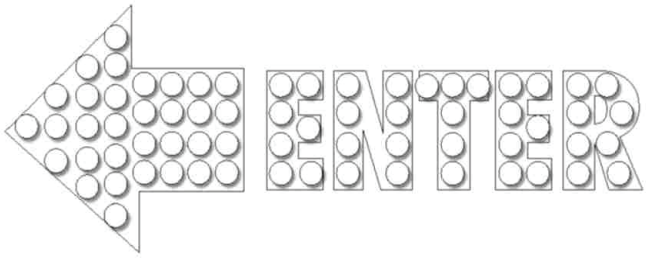

Figure 7-5 shows an externally illuminated sign using flood lighting, which is regulated by the Energy Standards. The power (wattage) used for these lighting components must comply with the watts per square foot approach, or use only lighting technologies approved according to §140.8(b).

Figure 7-5: Externally Illuminated Sign Using Flood Lighting

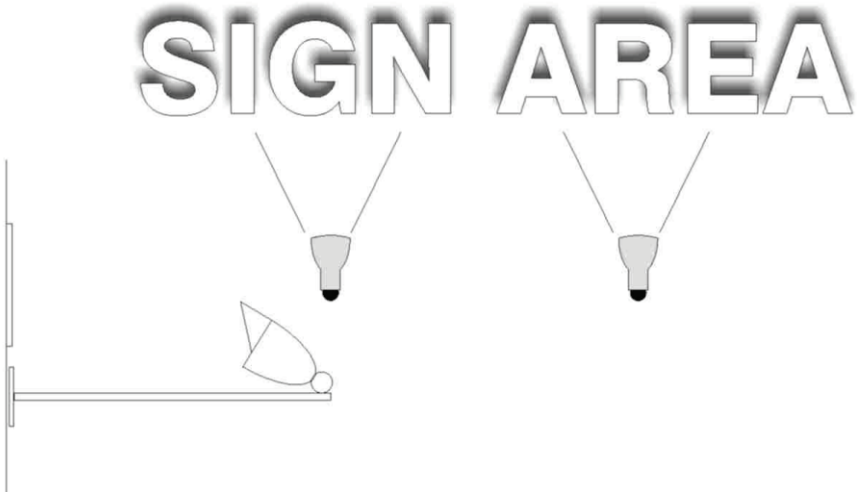

Example 7-2

Question

Can I use neon or cold cathode lights in my sign and comply with the Energy Standards under Option 2 (Compliant Alternate Lighting Sources)?

Answer

Yes, neon and cold cathode lights are allowed under the alternate light source compliance option, provided that the transformers or power supplies have an efficiency of 75 percent or greater for output currents less than 50 mA and 68 percent or greater for output currents 50 mA or greater.

Example 7-3

Question

Do signs inside a theater lobby or other indoor environments need to comply with the sign requirements?

Answer

Yes, all internally and externally illuminated signs whether indoor or outdoor must comply with either the Maximum Allowed Lighting Power or Compliant Alternate Lighting Sources compliance option.

Example 7-4

Question

My sign is equipped with both hardwired compact fluorescent lamps and incandescent lamps. Can my sign comply under the Compliant Alternate Lighting Sources option?

Answer

No. Since your sign is not exclusively equipped with energy efficient technologies allowed under the Compliant Alternate Lighting Sources option (incandescent sources are not allowed), it therefore must comply under the Maximum Allowed Lighting Power compliance option. Your other option is to replace the incandescent sources with an energy efficient option that is permitted under the specific technology approach, such as compliant LED, pulse start or ceramic metal halide, or fluorescent.

Example 7-5

Question

My sign has three parts: an internally illuminated panel sign equipped with electronic ballasts, and two unfiltered 30 mA neon signs on top and bottom of the panel sign displaying an illuminated arrow and lettering having power supplies with an efficiency of 76 percent. Does this sign comply with the Compliant Alternate Lighting Sources option?

Answer

Yes, as long as the internally illuminated panel portion is illuminated with a compliant technology. This sign is essentially made up of three different signs; an internally illuminated panel sign and two unfiltered neon signs with efficient power supplies that comply with the Compliant Alternate Lighting Sources option. Therefore the entire sign complies with the Energy Standards as long as the separate parts comply.

Example 7-6

Question

Are signs required to comply with Outdoor Lighting Zone requirements?

Answer

No. Outdoor Lighting Zones do not apply in any way to signs. The Sign Lighting Standards are the same throughout the state; they do not vary with Outdoor Lighting Zones.

7.5 Additions and Alterations

§141.0(a)1, §141.0(b)2H

All new signs, regardless of whether they are installed in conjunction with an indoor or outdoor addition, or an alteration to a building or outdoor lighting system, must meet the requirements for newly installed equipment in §110.9, §130.0, §130.3 and §140.8.

7.5.1 Sign Alterations

§141.0(b)2M

Existing indoor and outdoor internally illuminated and externally illuminated signs that are altered as specified by §141.0(b)2M are required to meet the requirements of §140.8. Altered components of existing indoor and outdoor internally and externally illuminated signs must also meet the requirements of §130.0.

These requirements (either Maximum Allowed or Compliant Alternate Lighting Sources) are triggered by alterations to existing internally or externally illuminated signs when any of the following occurs as result of the alteration, as specified in §141.0(b)2M:

- The connected lighting power is increased.
- More than 50 percent of the ballasts are replaced and rewired.
- The sign is relocated to a different location on the same site or on a different site.

The requirements for signs are not triggered when just the lamps are replaced, the sign face is replaced or the ballasts are replaced (without rewiring).

Sign ballast rewiring that triggers the alterations requirements generally involves rewiring from parallel to series or vice versa, or when a ballast(s) is relocated within the same sign requiring relocating the wires. This does not include routine in-place ballast replacements.

Example 7-7

Question

We are replacing 60 percent of the ballasts in a sign. Must we replace the remaining ballasts in the sign in order to comply with the Energy Standards?

Answer

It depends. If more than 50 percent of the ballasts are being replaced, and the replacement involves rewiring the ballasts, then the requirements of §140.8 apply to the whole sign. If more than 50 percent of the ballasts are being replaced during regular maintenance, and the ballasts are not being rewired, then the sign is not required to meet the Energy Standards requirements. However, when existing wiring will allow the direct replacement of a magnetic ballast with a high efficiency high frequency electronic fluorescent ballast, even though the Energy Standards do not require the electronic ballast, the sign owner is encouraged to replace the magnetic ballasts with an electronic ballast.

Example 7-8

Question

I have a strip mall full of signs. Must I immediately bring all of these signs into compliance even if I'm not going to alter them?

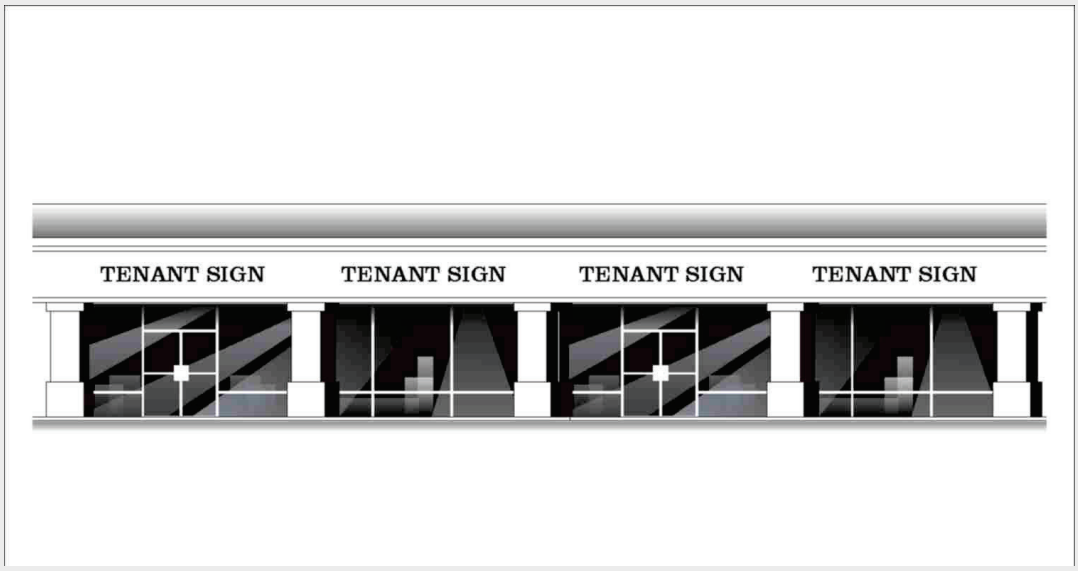

Answer

No, only those signs in which at least 50 percent of the ballasts are replaced and rewired, or those signs that are moved to a new location (on the same property or different property) must comply with the sign lighting energy requirements. Also, all newly installed signs must also comply with the sign lighting energy requirements.

7.6 Energy Compliance Documentation

7.6.1 Overview

This section describes the required documentation for compliance with the sign lighting energy requirements. At the time the sign permit application is submitted to the enforcement agency, the applicant must also submit the sign lighting energy compliance documentation.

The sign lighting energy compliance documentation is located in Appendix A of this manual and are designated as "NRCC-LTS".

Sign lighting compliance documents for compliance with the 2016 Energy Standards will be required starting on January 1, 2017.

See Chapter 2 of this manual for additional information about the data registry.

7.6.2 Sign Lighting Inspection

The electrical building inspection process for sign lighting energy compliance is carried out along with the other building inspections performed by the enforcement agency. The inspector relies upon the plans (when required for signs) and upon the NRCC-LTS-01-E Certificate of Compliance documentations.

7.6.3 Two Combined SLTG Documents

There are two compliance documents required for compliance with the sign lighting Standards:

1. Certificate of Compliance.
2. Installation Certificate.

For convenience of the sign lighting industry, these two documents have been combined into one multi-use compliance document with the sign lighting Standards. See Section 5.10.6 of this manual for information about the Certificate of Compliance, and Section 5.10.7 for information about the Installation Certificate.

7.6.4 Explanation of Compliance Document Numbering System

The following is an explanation of the Compliance Document Numbering System:

NRCC	Nonresidential (NR) Certificate of Compliance (CC)
LTS	Lighting (LT), Signs (S)
01	The sequential number of sets. For signs, there is only one set of documents
E	Enforcement Document. Developed primarily for the Enforcement Agency

7.6.5 Lighting Control Systems Installation Certificate

There is another installation certificate required when a lighting control system or an EMCS is installed to comply with the sign lighting control requirements. They are as follows:

1. The person who is eligible under Division 3 of the Business and Professions Code to accept responsibility for the construction or installation of features, materials, components, or manufactured devices shall sign and submit the Installation Certificate.
2. If any of the requirements in the Installation Certificate fail the installation tests, that application shall not be recognized for compliance with the Energy Standards.

For lighting control systems and EMCS, there are Certificates of Installation for nonresidential indoor lighting (LTI), and for nonresidential outdoor lighting (LTO). However there is no similar document for sign lighting (LTS). Therefore, if sign lighting is controlled by a lighting control system or by an EMCS, the NRCI-LTI-02-E or the NRCI-LTO-02-E, shall be used as a Certificate of Installation submitted for signs.