Energy Research and Development Division
FINAL PROJECT REPORT

TRI-GENERATION ENERGY SYSTEM TECHNOLOGY

Prepared for: California Energy Commission
Prepared by: Altex Technologies Inc.

JANUARY 2015
CEC-500-2015-026

PREPARED BY:

Primary Authors:
Dr. John Kelly
Eric Darby

Altex Technologies Inc.
244 Sobrante Way
Sunnyvale, CA 94086
Phone: 408-328-8322
http://www.altextech.com

Contract Number: PIR-11-027

Prepared for:

California Energy Commission

Michael Kane
Project Manager

Aleecia Gutierrez
Office Manager

Laurie ten Hope
Deputy Director
ENERGY RESEARCH AND DEVELOPMENT DIVISION

Robert P. Oglesby
Executive Director

DISCLAIMER

This report was prepared as the result of work sponsored by the California Energy Commission. It does not necessarily represent the views of the Energy Commission, its employees or the State of California. The Energy Commission, the State of California, its employees, contractors and subcontractors make no warranty, express or implied, and assume no legal liability for the information in this report; nor does any party represent that the uses of this information will not infringe upon privately owned rights. This report has not been approved or disapproved by the California Energy Commission nor has the California Energy Commission passed upon the accuracy or adequacy of the information in this report.

ACKNOWLEDGEMENTS

Altex Technologies Corporation thanks the California Energy Commission for its support of this research.

PREFACE

The California Energy Commission Public Interest Energy Research (PIER) Program supports public interest energy research and development that will help improve the quality of life in California by bringing environmentally safe, affordable, and reliable energy services and products to the marketplace.

The PIER Program conducts public interest research, development, and demonstration (RD&D) projects to benefit California.

The PIER Program strives to conduct the most promising public interest energy research by partnering with RD&D entities, including individuals, businesses, utilities, and public or private research institutions.

PIER funding efforts are focused on the following RD&D program areas:

- Buildings End-Use Energy Efficiency
- Energy Innovations Small Grants
- Energy-Related Environmental Research
- Energy Systems Integration
- Environmentally Preferred Advanced Generation
- Industrial/Agricultural/Water End-Use Energy Efficiency
- Renewable Energy Technologies
- Transportation

Tri-generation Energy System Technology Final Report is the final report for the Tri-generation Energy System Technology project PIR-11-027, conducted by Altex Technologies, Inc. The information from this project contributes to the Energy Commission's Renewable Energy Technologies Program.

For more information about the Energy Research and Development Division, please visit the Energy Commission's website at www.energy.ca.gov/research/ or contact the Energy Commission at 916-327-1551.

ABSTRACT

Altex Technologies Corporation designed, built, and tested an advanced steam jet refrigeration system that could augment micro gas turbine-based Combined Heating and Power systems. The Trigeneration Energy System Technology could also function as a stand-alone chiller that operates on waste (or excess) medium-pressure steam. The system operates with water as its working fluid, avoiding the use of ozone-depleting and/or global warming-promoting refrigerants. Altex designed the system with two independently-plumbed steam ejectors, to enable a broader range of cooling output, and a liquid ring vacuum pump, which decreased overall steam consumption for a given cooling output. Each ejector exhausted to an air-cooled condenser, one of which was constructed using Altex's proprietary low pressure drop heat exchanger technology, and one of which was of more conventional construction.

The complete system was tested in Altex's laboratory using 75 psig steam, and it achieved 5.9 cooling tons (20.7 kW) output. The system produced chilled water as cold as 39°F (3.9°C), and the peak electrical Coefficient of Performance was 5.3, which is 40-60 percent lower than conventional mechanical vapor compression chillers. The proprietary Altex condenser achieved the same condensing performance as the conventional unit, though the Altex condenser is 25 percent smaller in size. These test data verified that the system would improve uptime of some small combined heating and power systems, and could also be used as an inlet air cooler for the micro gas turbine, thus increasing power output during times of warm ambient temperatures.

Keywords: California Energy Commission, Tri-generation, Cogeneration, chillers, Combined Heating and Power, ejectors, building energy efficiency, waste steam, waste heat recovery

Please use the following citation for this report:

Kelly, Dr. John, Darby, Eric. (Altex Technologies Corporation). 2015. ***Tri-generation Energy System Technology Final Report.*** California Energy Commission. Publication number: CEC-500-2015-026

TABLE OF CONTENTS

Acknowledgements ..... **i**

PREFACE ..... **ii**

ABSTRACT ..... **iii**

TABLE OF CONTENTS ..... **iv**

LIST OF FIGURES ..... **vi**

LIST OF TABLES ..... **vii**

EXECUTIVE SUMMARY **1**

Introduction 1

Approach 1

Conclusions and Recommendations 2

Benefits to California 2

CHAPTER 1: Process Design **3**

1.1 Acquisition and Analysis of Typical Facility Heat Demand 3

1.2 Process Definition 5

1.3 Process Analysis 8

1.4 Heat Exchanger Testing 10

CHAPTER 2: Full Scale Design and Cost Estimation **12**

2.1 Mechanical Component Selection 12

2.2 Mechanical Design and Packaging 14

2.3 Preliminary Payback Calculations 15

2.4 Capacity Optimization 16

CHAPTER 3: Test System Design and Build **18**

3.1 Piping and Instrumentation Diagram 18

3.2 Condenser Design and Fabrication 18

3.3 Heading 2 22

3.4 Facility Build 27

CHAPTER 4: Testing **29**

4.1 Preliminary Testing 29
4.2 Full System Testing 30
4.3 Testing Discussion and Conclusions 37
4.4 Coefficient of Performance Calculation 38
CHAPTER 5: Cost and Performance Evaluation 41
5.1 Overview 41
5.2 Testing Results and Review of Modeling Assumptions 41
5.3 Capacity Overview 43
5.4 Cost Targets 44
5.5 Payback Evaluation 45
5.6 System Cost and Performance Conclusions 49
CHAPTER 6: Production Readiness 50
6.1 Introduction 50
6.2 Ejectors 50
6.3 Evaporator 50
6.4 Condenser 51
6.5 Fans and Pumps 53
6.6 Liquid Ring Vacuum Pump 53
6.7 Controls and Electronics 54
6.8 MGT Inlet HX (3.5 ton version only) 55
6.9 Assembly and Test 55
6.10 Conclusions Regarding Overall Production Readiness 56
CHAPTER 7: Project Conclusions 57
GLOSSARy 59
REFERENCES 61
APPENDIX A: HVAC and Chiller Benchmarking A-1

LIST OF FIGURES

Figure 1: Operation of 10 MMBtu/hr Boiler at Costa Mesa Westin 3
Figure 2: Daily Operation of 5 MMBtu/hr Boiler at Costa Mesa Westin 4
Figure 3: Scaling of 5 MMBtu/hr Boiler Operation 5
Figure 4: Typical Steam Jet Refrigeration System 6
Figure 5: Five Stage Evaporator SJR 7
Figure 6: CHEMCAD Model of TRIEST System 8
Figure 7: CHEMCAD Sensitivity Analysis of Ejector Performance—Cooling Production Variation for Various Condenser Temperatures, Inlet Steam Pressures, and Ejector Efficiencies. 9
Figure 8: Altex's ASHRAE 33 Radiator Test Facility 11
Figure 9: Scaled Single Layer Radiator Performance Test Results 11
Figure 10: Preliminary TRIEST Design 14
Figure 11: TRIEST Subscale Piping and Instrumentation Diagram 18
Figure 12: TRIEST Subscale Piping and Instrumentation Diagram 19
Figure 13: Condenser and Fan Support FEA Analysis 19
Figure 14: Solder Test Results 20
Figure 15: Assembled Condenser Core 21
Figure 16: Condenser Support Frames with Fans Installed 21
Figure 17: Conventional Condenser, Received at Altex 22
Figure 18: TRIEST Evaporator 23
Figure 19: TRIEST Evaporator CFD and FEA Results 23
Figure 20: Evaporator Inner Structure Assembly – Start of Fabrication 24
Figure 21: Evaporator Vessel – During Final Welding 25
Figure 22: Steam Ejectors, Received at Altex 25
Figure 23: Evaporator Final Assembly at Altex 26
Figure 24: Liquid Ring Vacuum Pump Skid, As-Received at Altex 26
Figure 25: System Assembled with Both Condensers 27
Figure 26: TRIEST Design and Facility Layout 28
Figure 27: Steam System Piping and Electronic Flow Meter 28
Figure 28: Air Side Pressure Drop Per Length Comparison, Various Altex Condensers 30
Figure 29: Part-Capacity Testing – Altex Condenser, High Water Flow 34
Figure 30: Part-Capacity Testing – Altex Condenser, Low Water Flow 34
Figure 31: Part-Capacity Testing—Conventional Condenser, Medium Water Flow 35
Figure 32: Full Capacity Testing—High Water Flow 35
Figure 33: Full Capacity Testing—Medium Water Flow, 48°F (8.9°) Evaporator 36
Figure 34: Full Capacity Testing—Medium Water Flow, 55°F (12.8°C) Evaporator 36
Figure 35: Full Capacity Testing—Batch Cooling Simulation 37
Figure 36: SCG Test Report Excerpt—All Sourced from SCG-EAC Draft Report 42
Figure 37: MGT Manufacturer's Published De-rate, as a Function of Ambient Air Temperature 48
Figure 38: Altex Aluminum Heat Exchanger 55

LIST OF TABLES

Table 1: CHEMCAD Study of Alternative Working Fluids, Relative to Steam-based System 10
Table 2: Vacuum Component Vendor Matrix 12
Table 3: Preliminary 25 Cooling Ton TRIEST BOM 13
Table 4: Size Comparison—TRIEST vs. Commercial HVAC and Chillers 14
Table 5: Uptime Effect on BBEST Payback 15
Table 6: Uptime Effect on BBEST + TRIEST Payback 16
Table 7: TRIEST Capacity Matrix 17
Table 8: Liquid Ring Vacuum Pump Test Results 29
Table 9: TRIEST System Performance Summary 33
Table 10: TRIEST Batch Cooling Simulation 33
Table 11: Coefficient of Performance Calculations 39
Table 12: Revised TRIEST Capacity Matrix 43
Table 13: System Cost Targets, Various TRIEST Capacities 44
Table 14: Uptime Effect on BBEST-only Payback 45
Table 15: BBEST+50 ton TRIEST Payback 46
Table 16: BBEST+8.0 ton TRIEST Payback 47
Table 17: Potential Power Recovery with 3.5 ton TRIEST Inlet Air Cooler 49
Table 18: TRIEST Condenser Low-Volume Production Cost Estimate 52
Table 19: TRIEST Condenser Prototype Costs 52
Table 20: TRIEST Controls Simplified BOM & Cost Estimate 54
Table 21: Production Labor Goals 56
Table A-1: HVAC/Chiller Normalized Specifications 3
Table A-2: Approximate Costs of Chiller Systems 4

EXECUTIVE SUMMARY

Introduction

Thousands of existing boilers in California used in industrial processing consume 87 billion cubic feet of natural gas each year. These boilers could be retrofitted with compact Combined Heat and Power (CHP) packages that replace existing burners and cogenerate electricity, while efficiently providing reliable heat input that serves process needs. By generating electricity with a micro gas turbine and recovering all of the turbine's exhaust heat in the boiler, overall efficiencies would exceed 80 percent. Altex Technologies previously developed a new CHP system, Boiler Burner Energy System Technology (BBEST), which integrates a simple-cycle 100 kW micro gas turbine and a natural-gas fired Ultra Reduced NOx burner. BBEST offers a two to three year payback (depending on incentives) in applications, such as a large hotel, that have year-round thermal demand in excess of 2.1 MMBtu/hr.

The key to achieving these quick paybacks is making the most of micro gas turbine operating time, so that the valuable electrical power production is maximized. If thermal *demand* drops below micro gas turbine thermal *output*, the output must be reduced, or the system stopped. These low demand times are often coincident with high ambient temperatures—a time when heating demands are minimal, but cooling demands are high. Therefore, a low-cost, heat-driven cooling system would be an ideal complement to BBEST—it would absorb excess thermal output, maximize micro gas turbine electrical output, and provide another valuable output at a time of demand.

Approach

The Tri-generation Energy System Technology (TRIEST) process developed under this project, adds to BBEST an advanced steam jet chiller that uses excess steam capacity in commercial and industrial facilities to provide low cost cooling. The excess steam may be generated as a product from the CHP installation, or the byproduct of a higher-pressure steam expansion process. TRIEST complements CHP systems, providing a valuable output during warmer months when steam demand is otherwise too low to use all the waste heat captured from the micro gas turbine exhaust. Energy efficiency of the combined system is thereby increased, allowing for year-round continuous electrical generation critical to the economic performance of micro gas turbine-based CHP systems.

Steam jet cooling systems have other applications independent of CHP installations, and have been used for more than 100 years. TRIEST is modernizing this technology by implementing low-pressure drop heat exchangers that save fan electric power, simplifying the process, and upgrading controls. The system uses low pressure steam and a simple ejector to create a vacuum in an evaporator chamber partially filled with water. The water then evaporates at its saturation temperature, which is depressed by the vacuum. The mix of expanded steam and evaporated water is then condensed and returned to the boiler and evaporator, creating a refrigerating system that relies on water, instead of hydroflourocarbon or chlorofluorocarbon refrigerants, which are potent greenhouse gases.

Conclusions and Recommendations

Altex tested the TRIEST system at a variety of capacities and operating conditions in the Altex Test Facility. Following laboratory tests, Altex evaluated the system performance, cost, and production readiness, as well as the next steps required to evolve the design in support of a field demonstration. Operating data from a 10 MMBtu/hr boiler confirmed that variable demand, especially in the summer months, resulted in substantial periods of time where thermal demand was less than 2.1 MMBtu/hr required for continuous operation of the micro gas turbine at maximum capacity. A TRIEST of 6-33 cooling tons (72,000-396,000 Btu/hr) capacity would add sufficient demand to ensure continuous MGT uptime. Analysis showed that

In laboratory testing, the TRIEST system demonstrated stable operation at peak and half capacity. It also achieved overall performance that compares favorably to commercially available chillers that use conventional refrigerants. TRIEST would generate cooling at only 50-60 percent of the electrical consumption of a conventional chiller, and can generate as-cold or colder evaporator temperatures. For installations where the steam production cost is very low (or available as the byproduct of a higher-pressure expansion process) the relatively low coefficient of performance typical of steam jet refrigeration is not of concern. Actual performance parameters include:

- Peak electric coefficient of performance of 5.30
- 5.9 cooling tons peak output
- Process water flows of 12.8-23.8 gallons per minute, and differential temperatures of 3.5 - 7.6°F (2 -4.2°C)
- Process water temperatures of 60°F (15.6°C) or less under both full and part-load conditions
- Batch cooling capacity below 39°F (3.9°C)

Benefits to California

The public benefits to California ratepayers accrue from reduced fuel demand for power generation, and from improved competitiveness of California businesses with low-cost and on-site power generation that complies with local environmental regulations. Fuel savings will translate to reductions in GHG emissions and support California AB 32 mandates and goals for reductions in CO_2 emissions. Based on the deployment of up to 500 MW of micro-gas-turbine-based CHP estimated as available for retrofit to California's commercial and light industrial boiler fleets, the estimate for possible greenhouse gas reductions is as high as 740,000 tons/yr compared to newer central power stations.

.

CHAPTER 1:
Process Design

1.1 Acquisition and Analysis of Typical Facility Heat Demand

As part of the previous Boiler Burner Energy System Technology (BBEST) project, Altex obtained boiler operating logs from the Westin Hotel in Costa Mesa for the calendar year 2011. At the time, the facility had two Bryan boilers, though only one was operated at a time. Altex utilized daily operating hours and natural gas consumption from the logs to calculate a "Day-averaged Firing Rate" (Gas consumption/24 hours) and an "Average Firing Rate" (Gas consumption/hours firing). As shown in Figure 1, the Day-averaged firing rate indicates a 1.9 - 2.3 MMBtu/hr heat input, but the Average Firing Rate is much higher. This implies a highly variable demand, or a burner with poor turndown. Anecdotal evidence from the site confirmed that both were true. Highly variable load can cause intermittent operation of the micro gas turbine (MGT) in a Combined Heat and Power (CHP) system. This situation increases payback time, since the low-cost electricity of the CHP system is not continuously generated. Intermittent operation may also have a negative impact on turbine durability.

Seasonal effects can also be observed in Figure 1: summer heat demand is less than winter, as expected. Though the January-to-July difference is only ~0.4 MMBtu/hr, or 4% of the boiler capacity, that difference decreases the average demand to less than the thermal input (~2.1 MMBtu/hr) of the MGT exhaust to the boiler.

Figure 1: Operation of 10 MMBtu/hr Boiler at Costa Mesa Westin

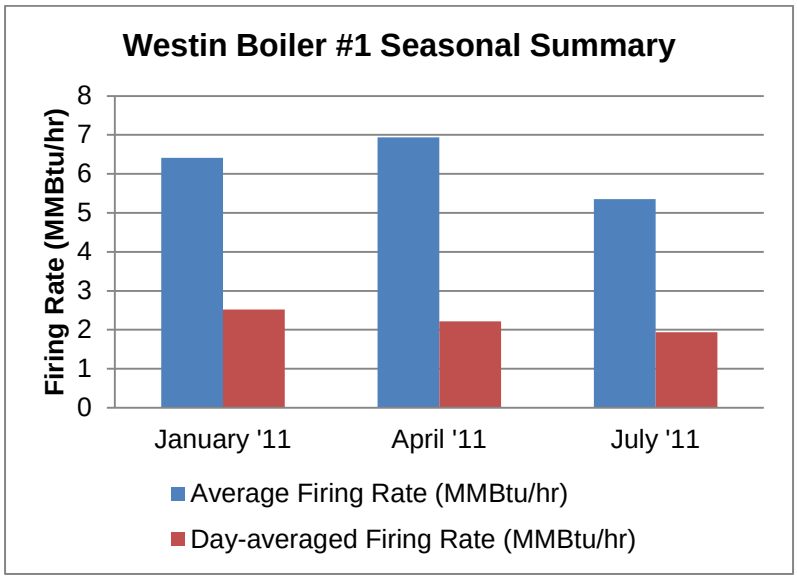

In early 2012, the Westin replaced one of the existing boilers with a smaller (125 BoHP, or 5 MMBtu/hr) boiler equipped with a surface matrix-type burner, which has 3:1 turndown, creating a low fire point approximately equal to that of the 10 MMBtu/hr BBEST with 5:1

turndown. This created an opportunity to better assess the expected duty cycle of the BBEST system, and so Altex fitted data acquisition equipment to the new boiler.

Altex staff connected the input fuel meter to a PC-based data acquisition system, and recorded fuel flow over 24 hours during a weekday in November. Though fuel flow is a measure of a particular burner and boiler's responses to demand (rather than a direct measure of demand), this test still provided an assessment of the burner behavior. Figure 2 presents the acquired data, shown in blue as a five-minute moving average, and a curve fit of the same data in red. The day-averaged firing rate was 2.55 MMBtu/hr, similar to the January 2011 data shown in Figure 1. This more detailed data shows that overnight heat demand was lower than 2 MMBtu/hr.

After Altex installed the BBEST system on the 10 MMBtu/hr boiler, the company found that the heat demand, in winter, was adequate to maintain continuous operation of the MGT. This can be attributed to weather conditions, the more advanced steam pressure control used by BBEST, and the inefficiency of the larger, older Bryan boiler.

Figure 2: Daily Operation of 5 MMBtu/hr Boiler at Costa Mesa Westin

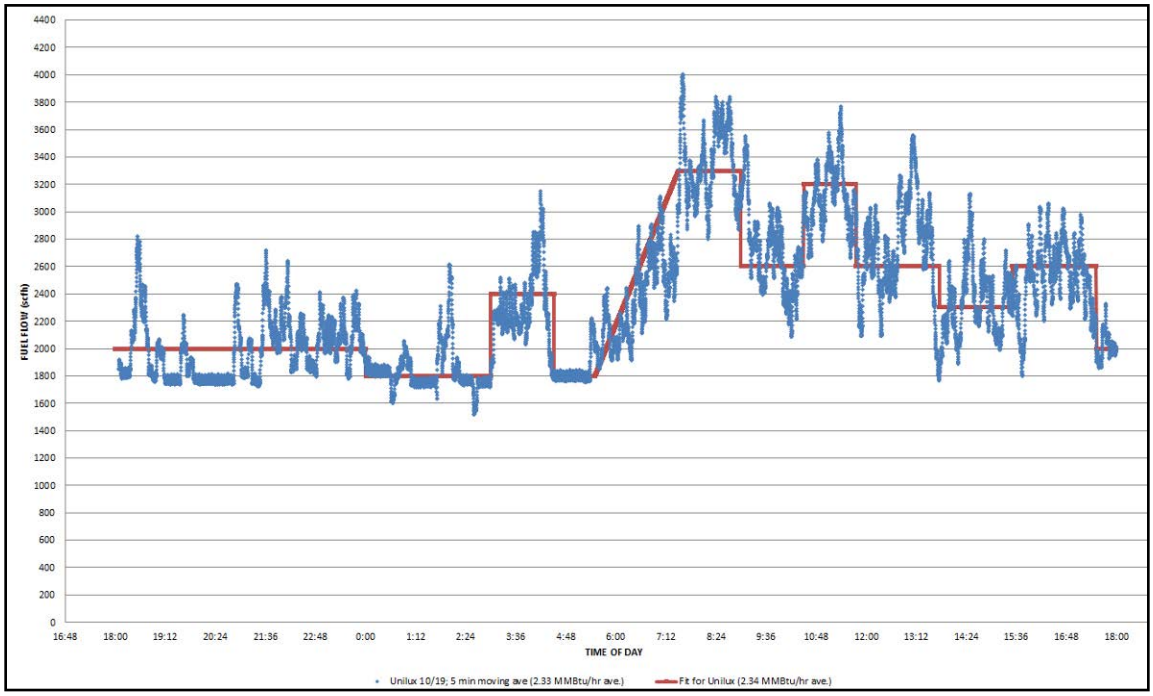

As shown in Figure 1, average heat demand is lower in summer. To estimate changes in average demand, the team scaled the curve-fit data of Figure 2 to Day-averaged Firing Rates of 2, 3, and 4.7 MMBtu/hr, as presented in Figure 3. The 2 MMBtu/hr thermal input projection is of particular interest, as that average rate nearly matches that of July 2011 in Figure 1. Of course, seasonal demand may also change the distribution of heat demand throughout the day, as space heating needs decrease, but occupancy-driven demands such as bathing and cooking vary

independently. However, the scaled profile in Figure 3 provided a starting estimate for the TRIEST project in a challenging installation.

Figure 3: Scaling of 5 MMBtu/hr Boiler Operation

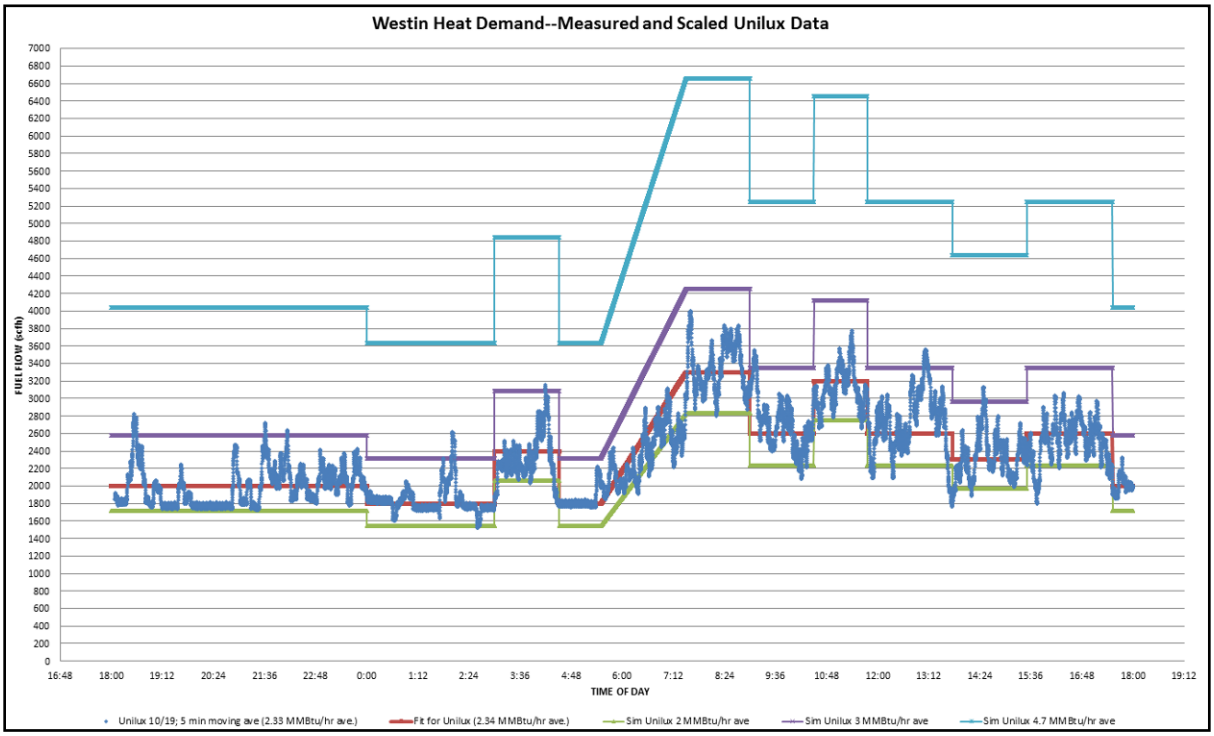

For the 2.0 MMBtu/hr projection (green line), the projected heat input from 6 pm to 3 am is always less than 1.8 MMBtu/hr, and the average from 6 pm to 6 am is also less than 1.8MMBtu/hr. This is the potential opportunity for TRIEST—to increase steam demand (while producing a valuable output) at these low demand times to maintain continuous electricity production.

1.2 Process Definition

Altex consulted existing literature on Steam Jet Refrigeration (SJR) systems, including both research systems and full scale industrial units. The team found no commercially available, standardized systems—all are custom or semi-custom installations designed for a specific process or facility. A schematic of a single stage SJR is shown in Figure 4. The process design then began with an examination of steam jet fundamentals. The performance of a steam ejector is a function of: steam pressure; efficiency of the nozzle, mixer and diffuser; and the pressure ratio between the flash tank (also known as an evaporator) and the primary condenser. To match conventional chiller and air conditioner practice, TRIEST would use an air-cooled condenser rated at 95°F (35°C) ambient air temperature, yielding a condenser temperature of 105°F (40.6°C). That temperature and the saturation properties of the fluid (water) being condensed sets the condenser pressure at 1.06 psia.

Figure 4: Typical Steam Jet Refrigeration System

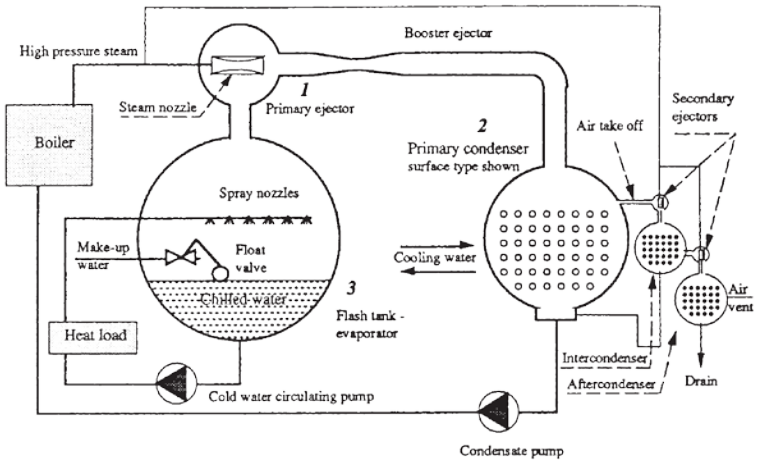

Illustration Credit: Perry's Chemical Engineering Handbook, 7th Edition

It is desirable for TRIEST to function as a drop-in or parallel system that provides chilled water, chilled water/glycol mix, or cool air to a facility. Commercially-available chillers based on mechanical vapor compression (MVC) commonly provide 45°F (7.2°C) chilled fluid, so the team initially set this as the initial goal of the process design. Like the condenser, the evaporator pressure is set by the temperature of the evaporating fluid. For the 45°F (7.2°C) chilled water requirement the pressure is 0.1475 psia. This creates a pressure ratio of 7.1:1, which requires high steam consumption. Perry's Chemical Engineering Handbook notes: "The lower the chilled-water outlet temperature, the more difficult the application becomes for steam jet units. Justification [for this approach] is improved with outlet chilled-water temperatures of 12.8°C (55°F) or higher…" Steam consumption predictions from leading companies in the ejector industry supported this assertion. This led to further research on literature claims regarding specific steam consumption (lb/hr steam per cooling ton). Available data inconsistently reported the temperature range of the fluid being cooled, or the systems described operated at conditions not representative of normal chiller or AC conditions (e.g., used water cooled condensers), but some conclusions were reached, particularly regarding single and multi-stage ejector configurations.

Multi-stage SJR systems, such as that shown in Figure 5, are commonly applied to processes requiring cooling across a broad (50°F/ 27.8°C) temperature range. The system includes multiple primary ejectors to draw a vacuum on multiple stages of the evaporator. This scheme enables lower steam consumption as compared to a single-stage evaporator, since the ejectors evacuating the higher temperature stages operate at lower pressure ratios than the total pressure ratio of the evaporator. Of note in Figure 5 are the condenser temperatures shown at right. For the 94°F (35°C) condenser/45°F (7.2°C) condition, steam consumption is estimated at 4 kg/1000kcal, or 26.6 lb/hr/ton cooling. Extrapolating to the 105°F (40°C) air-cooled condenser

condition chosen for TRIEST, consumption would increase to 32 lb/hr/ton cooling, or possibly more with a single-stage system.

A conventional MVC chiller operates with a small differential (5-10°F or 2.8-5.6°C) in facility supply and return temperatures. For a chiller-replacement SJR, this necessitates operating the evaporator at this same differential to the chilled liquid temperature. For a 10°F (5.6°C) temperature difference, the evaporator pressure difference between 45 and 55°F (7.2-12.8°C)is only 0.06 psia, so the added complexity of a multi-stage system (e.g. three stages operating at 52, 48.5, and 45°F, or 11.1, 9.2, and 7.2°C) provides only minor improvement in the pressure ratio at the higher stages, and thus is not justified.

Figure 5: Five Stage Evaporator SJR

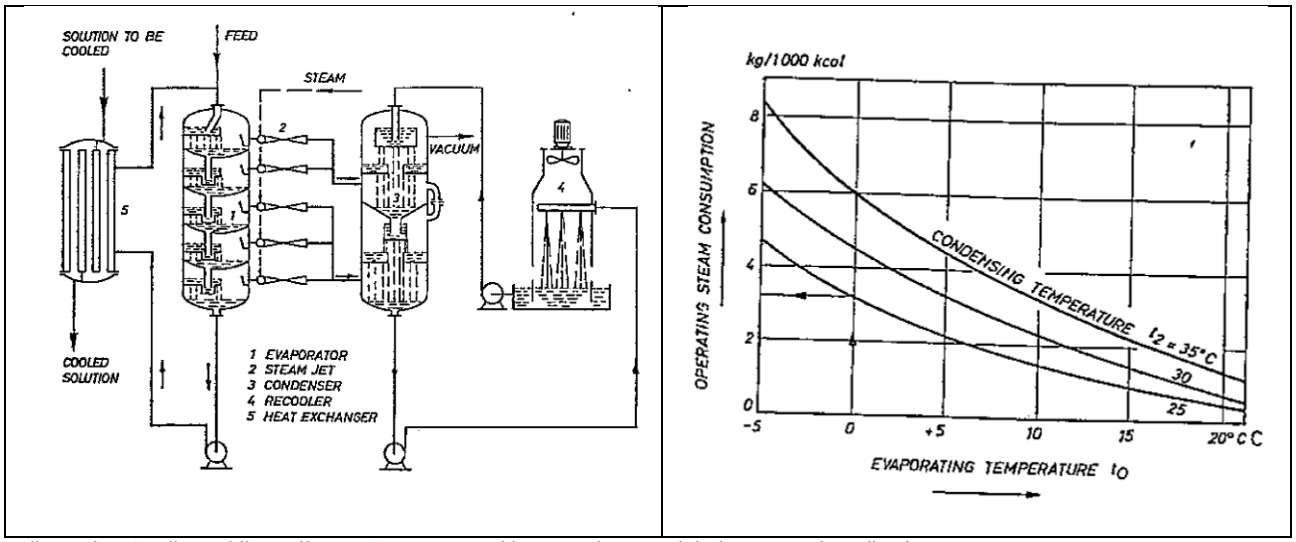

Illustration Credit: Wohlk, Wolfgang, Steam Jet Refrigerant Plants and their Range of Application

Based on these findings, Altex decided to use a single stage evaporator with two parallel first stage ejectors to decrease overall system volume and create capability for a 50% load operation mode. The target evaporator temperature would be 55°F (12.8°C). To achieve similar performance in an application that normally required a 45°F (7.2°C) process supply to an external heat exchanger, the heat exchanger could be directly integrated into the production version of TRIEST, or chilled water could be supplied directly from the evaporator, thus producing a similar end result.

Non-condensable removal from the condensers was another critical design consideration. Non-condensable loading affects both condenser and ejector performance, as this fluid must be transported through the system with the water vapor. If not evacuated, its volume will increase, proportionally reducing the volume of evaporated water that can be transported by the ejectors. The magnitude of non-condensable flow is dependent on air entrained in the steam (e.g. from the boiler's water supply) and leaks in various fittings and flanges in the sub-atmospheric areas of the system. Altex engineers estimated the magnitude of these flows from tables created by

the Heat Exchange Institute, based on system volume and operating pressure, and added a conservative safety factor.

Additional ejectors, noted as "secondary ejectors" in Figure 4, can be used to pump non-condensable gases from the condenser to atmosphere. Altex included these in the initial process evaluation, but found that they increased the projected system steam consumption substantially. Ejector suppliers provided estimates for secondary ejector steam consumption, and under some conditions, the secondary ejectors required as much steam as the primary ejectors. These amounts were judged to be too high for cost- and energy-effective operation.

An alternate device for evacuating the condenser is a Liquid Ring Vacuum pump (LRV). These devices use a supply of cool (59°F or15°C) liquid to create a dynamic seal and draw vacuums as low as 0.5 psia. They offer lower rotating resistance (and therefore, power consumption) than dry pumps, and can accommodate saturated gases, which the condenser of course has. Since it does not require steam to operate, an LRV decreases specific steam consumption, as compared to secondary ejectors, though at some penalty of electrical power consumption. The trade-off of steam consumption versus electrical performance is heavily dependent on the non-condensable flow. Altex selected an LRV for the sub-scale TRIEST, and its power consumption was verified during the testing described in Chapter 4.

1.3 Process Analysis

Altex has multiple analysis tools available for process design and evaluation, including CHEMCAD, which is an industry–standard tool for chemical process and plant design. It also includes an extensive library of material properties and estimating tools for component costs. The team modeled the ejector system as a compressor-expander pair, then refined and expanded the model throughout the Task 2 period. The CHEMCAD process model is illustrated in Figure 6.

Figure 6: CHEMCAD Model of TRIEST System

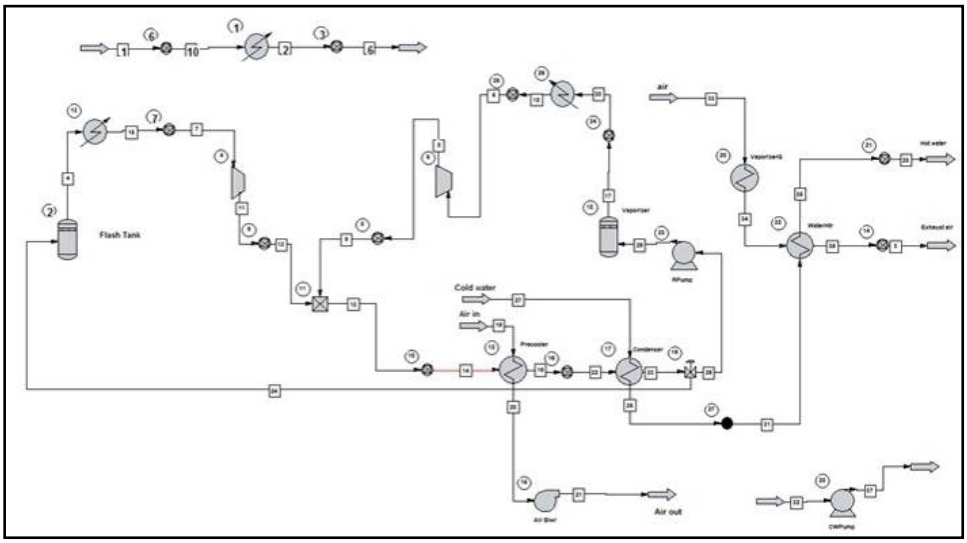

Illustration Credit: Altex Technologies Corp.

Engineers used the CHEMCAD model to analyze the sensitivity of performance to ejector efficiency, motive steam pressure, and condenser temperature (to simulate various ambient air conditions). Sample output is shown in Figure 7.

Figure 7: CHEMCAD Sensitivity Analysis of Ejector Performance—Cooling Production Variation for Various Condenser Temperatures, Inlet Steam Pressures, and Ejector Efficiencies

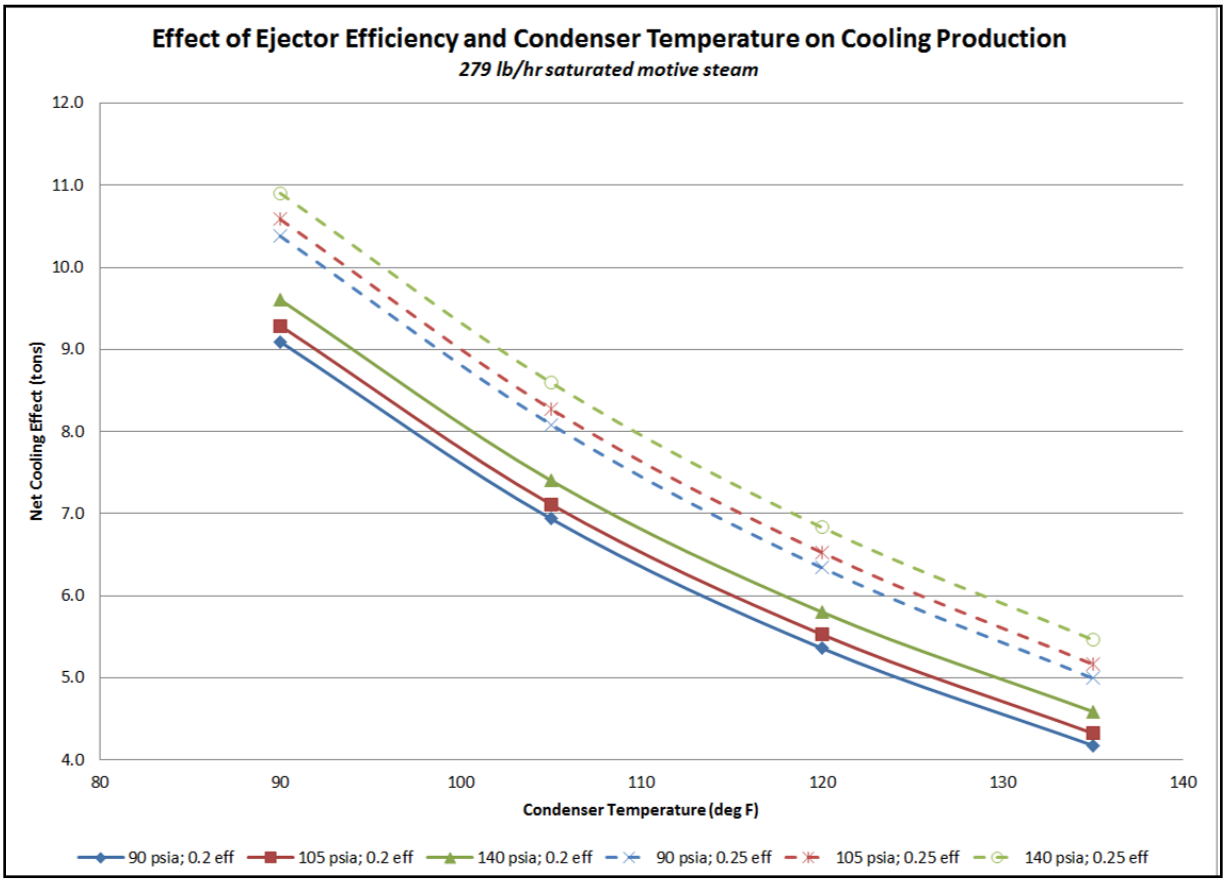

The TRIEST application shares some similarities with Organic Rankine Cycles (ORC), in that the heat available (in the form of steam) is relatively low grade heat. In ORC systems, various refrigerants have been employed as the working fluid. While refrigerants have associated drawbacks, such as ozone depletion (fluorocarbons), flammability (isobutane), and toxicity (ammonia), refrigerants have lower boiling points than water, and most avoid problems of freezing in < 32°F (0°C) ambient conditions. To evaluate the potential of refrigerant as the working fluid in TRIEST (instead of water), engineers modified the CHEMCAD model with a steam-to-refrigerant heat exchanger to produce refrigerant vapor at a rate that resulted in equivalent cooling to the water-based system.

The results of the refrigerant anaylsis are shown in Table 1. The generator temperature for the refrigerants is lower than the steam temperature, since the refrigerants are operated at sub-critical pressures. Even at the lower relative temperatures, the corresponding pressures are more than adequate to operate ejectors. CHEMCAD's estimates of capital costs showed little

deviation from that of the water-based system, but operating costs were high, as indicated by the electric Coefficient of Performance (cooling produced/electric energy input), expressed here relative to the steam case. The refrigerants require 230-287% more electricity for equivalent cooling. The high molecular weight and and low latent heat of vaporization for these refrigerants create high mass flow rates, which are power-consuming to pump.

This initial model assumed the same ejector efficiency as the steam system, regardless of the motive pressure possible with various refrigerants. Based on the steam-based models, even a 44% increase in motive pressure increased output less than 10% (see Figure 7), so a similarly minor improvement would be expected from higher-pressure refrigerant. This would not be enough to offset the ~250% increase in electrical consumption. These results confirmed the initial project direction of water/steam as the best working fluid.

Table 1: CHEMCAD Study of Alternative Working Fluids, Relative to Steam-based System

Fluid	Ejector Efficiency	Steam Temperature	Generator Temperature	Relative COPe	Relative Cap Cost
		deg F (C)	deg F (C)		$/kW cooling
Water	0.228	330 (165.6)	N/A	1	100%
R600a (isobutane)	0.228	N/A	200 (93.3)	0.348	120%
R717 (ammonia)	0.228	N/A	200 (93.3)	0.384	103%
R245fa	0.228	N/A	280 (137.8)	0.434	93%

1.4 Heat Exchanger Testing

Condenser size, cost, and performance are critical to meeting the project goals. Therefore, the team planned to use an Altex advanced heat exchanger—with proprietary "Non-Isotropic Structure for Heat Exchangers" (NISHEX) technology—for the main condenser. The NISHEX heat exchanger offers improved heat transfer over other advanced heat exchanger designs, and size and weight reductions over conventional designs.

Altex, under match funds provided by the US Navy, performed several tests during the Task 2 period to provide performance and design parameters for condenser design. All tests were performed on Altex's radiator test facility, which complies with the ASHRAE 33 standard, and is shown in Figure 8.

Figure 8: Altex's ASHRAE 33 Radiator Test Facility

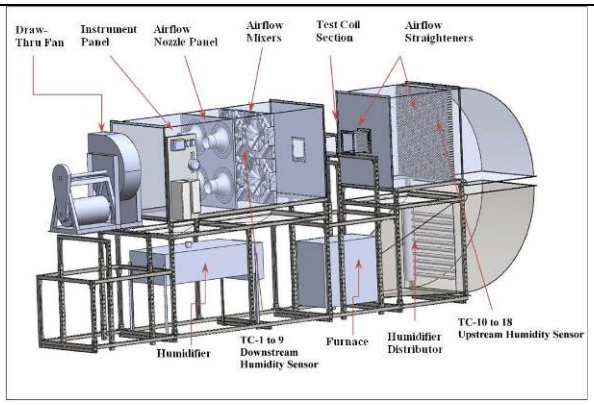

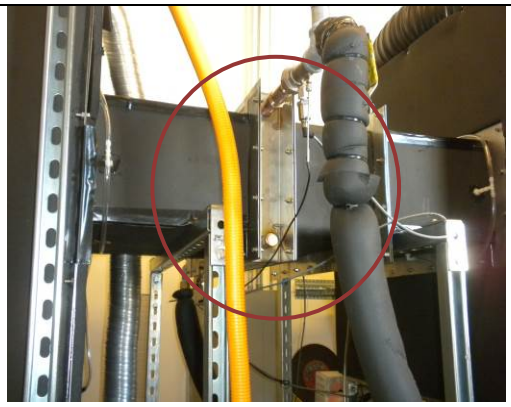

Test Facility Schematic

NISHEX Heat Exchanger Installed

Illustrations Credit: Altex Technologies Corp.

The municipal water service supplies the heater/water tank, and is capable of delivering up to 40 GPM water to the NISHEX unit. Water can be heated to 160°F (71.1°C), and air can be heated to 120°F (48.9°C). Figure 8, at right, shows the NISHEX subscale test heat exchanger installed in the test facility. This unit, fabricated under match funds, was made from aluminum and had a core size of 8"x 8.5". It had a smaller heat transfer capacity than is needed for the TRIEST condenser, but the test facility provided representative face velocities and air and water flows. Engineers followed Altex procedures for calibration, testing, and data processing. As shown in Figure 9, they measured air- and liquid-side pressure drops for various face velocities, and also determined the volumetric heat transfer coefficient. This design, for the US Navy, is a non-condensing application, but the air side pressure drop results could be applied to the condensing application.

Figure 9: Scaled Single Layer Radiator Performance Test Results

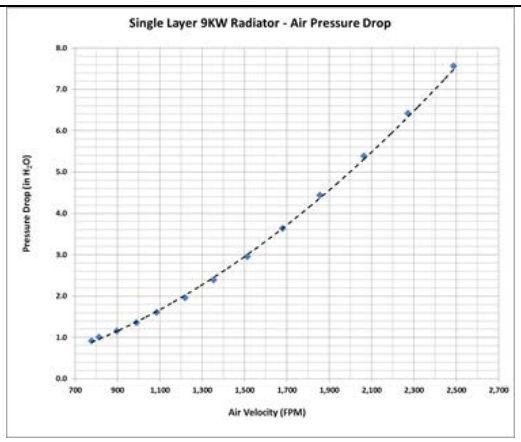

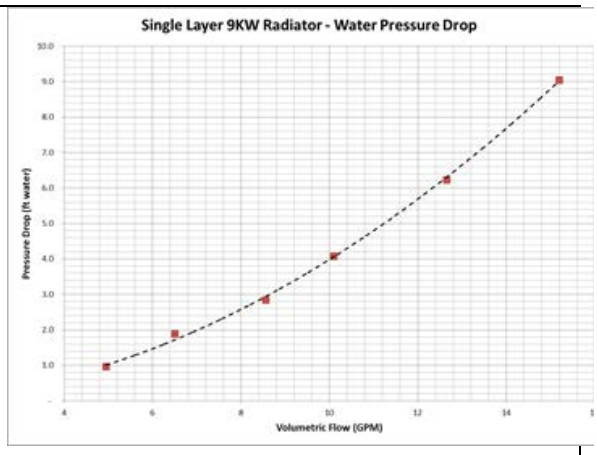

Air Pressure Drop

Water Pressure Drop

CHAPTER 2:
Full Scale Design and Cost Estimation

2.1 Mechanical Component Selection

Based on the system modeling, Altex sent requests for vacuum system component performance projections and quotations to leaders in the vacuum pump industry, as shown in Table 2. Ejector manufacturers quoted primary ejectors as well as the secondary ejectors for non-condensable removal. Liquid ring vacuum pump manufacturers quoted the equivalent of the secondary stage. Performance predictions and system content varied manufacturer-to-manufacturer, but were similar to the modeling results. The staff researched commercial off-the-shelf (COTS) parts, and completed initial sizing and cost estimations for a 25 cooling tons system. This resulted in the Bill of Materials shown in Table 3.

Table 2: Vacuum Component Vendor Matrix

Manufacturer	Capabilities	RFQ	Specifications Received
Ejectors			
Graham	Ejectors and Vacuum Pumps	Yes	Non-responsive after initial contact
Croll-Reynolds	Single & Multi-Stage Ejectors	Yes	Yes
Fox Valve	Single & Multi-Stage Ejectors	Yes	Yes
Schutte & Koerting	Single & Multi-Stage Ejectors; Condensers	Yes	Yes
Pumps			
Wintek	Vacuum Pumps	Yes	No--declined quotation
Dekker	Vacuum Pumps	Yes	Standard models and performance provided;
Travaini	Vacuum Pumps	Yes	Standard models and performance provided

Table 3: Preliminary 25 Cooling Ton TRIEST BOM

Assembly	Component	Sub-Component	Description	Qty	Unit	Unit price	Prototype Price	Production Price	Price Ref.
Chassis									
	Frame		Square Tubing	80	ft	$ 8	$ 628	$ 440	6527K334
	Sheet Metal Panels/door		5'x5' panels	8	Each	$ 200	$ 1,600	$ 1,120	Estimate
	Time to assemble/weld			40	Hours	$ 150	$ 6,000	$ 4,200	Estimate
Make-up Water									
	Thermocouple		Thermocouple	1	Each	$ 25	$ 25	$ 18	Omega
	Make up Water shutoff Valve		3/4 " ball valve	1	Each	$ 14	$ 14	$ 10	47865K24
	Steam Make up water Plumbing	Pipe	Black Sch40 3/4 "	5	Ft	$ 5	$ 27	$ 19	7750K232
		Fittings	Black Sch40 Elbow 3/4 "	2	Each	$ 12	$ 24	$ 17	44605K119
Cooling Coil Loop									
	25 Ton Cooling Coil		NISHEX	1	Each	$ 20,000	$ 20,000	$ 1,320	$15/kW
		Thermocouple	Water outlet TC	1	Each	$ 25	$ 25	$ 18	Omega
		Thermocouple	Water inlet TC	1	Each	$ 25	$ 25	$ 18	Omega
	Water Circulation Pump		98GPM at 20 ft head	1	Each	$ 515	$ 515	$ 361	8249K83
	Chilled Water Plumbing	Pipe	Black Sch40 2"	10	Ft	$ 15	$ 146	$ 102	7750K236
		Fittings	Black Sch40 Elbow 2 "	2	Each	$ 12	$ 24	$ 16	44605K119
		Insulation	Buna-N Insl.	10	Ft	$ 3	$ 30	$ 21	4463K172
	Return Water Plumbing	Pipe	Black Sch40 2"	10	Ft	$ 15	$ 146	$ 102	7750K236
		Fittings	Black Sch40 Elbow 2 "	2	Each	$ 12	$ 24	$ 16	44605K119
Vapor/Steam Loop									
		Thermocouple	Water inlet TC	1	Each	$ 25	$ 25	$ 18	Omega
		Pressure sensor	0-300 PSI Pressure transd.	1	Each	$ 175	$ 175	$ 123	3196K2
	Plumbing from Boiler to Steam Separator	Pipe	Black Sch40 2"	2	Ft	$ 15	$ 29	$ 20	7750K236
		Fittings	Black Sch40 Elbow 2 "	2	Each	$ 12	$ 24	$ 16	44605K119
		Insulation	Fiberglass with paper cover	2	Ft	$ 9	$ 19	$ 13	5556K76
		Steam Shutoff Valve	2" Ball valve	1	Each	$ 66	$ 66	$ 46	47865K28
	Steam Separator		Float and Thermostatic steam trap - 2" ports	1	Each	$ 682	$ 682	$ 477	Grainger
	Plumbing from Steam Separator to Ejectors	Pipe	Black Sch40 2"	8	Ft	$ 15	$ 116	$ 82	7750K236
		Fittings	Black Sch40 Elbow 2 "	4	Each	$ 12	$ 47	$ 33	44605K119
		Fittings	Black Sch40 Tee 2"	3	Each	$ 18	$ 54	$ 38	68115K46
		Insulation	Fiberglass with paper cover	8	Ft	$ 9	$ 75	$ 53	5556K76
		Steam Shutoff Valve	1 1/2" solinoid valve	2	Each	$ 487	$ 974	$ 682	49225K78
		Ejector 2 vacuum valve	6 " Butterfly Valve	1	Each	$ 440	$ 440	$ 308	5024K683
	Ejectors 1 and 2			2	Each	$ 6,000	$ 12,000	$ 2,000	S&K quote
	Booster Ejectors			2	Each	$ 3,500	$ 7,000	$ 1,200	S&K Estimate
	Plumbing from Ejector 1 and 2 to HX3		Flange Hardware	16	Each	$ 3	$ 48	$ 34	McMaster
	Condenser		NISHEX	1	Each	$ 30,000	$ 30,000	$ 4,395	$15/kW prod
		Thermocouple	Vapor inlet TC	1	Each	$ 25	$ 25	$ 18	Omega
		Thermocouple	Condensate outlet TC	1	Each	$ 25	$ 25	$ 18	Omega
		Thermocouple	Condenser Air in TC	1	Each	$ 25	$ 25	$ 18	Omega
		Thermocouple	Condenser Air out TC	1	Each	$ 25	$ 25	$ 18	Omega
	Plumbing from Condenser to Condensate Tank	Pipe	Black Sch40 2"	2	Ft	$ 15	$ 29	$ 20	7750K236
		Fittings	Black Sch40 Elbow 2 "	2	Each	$ 12	$ 24	$ 16	44605K119
	Condensate Tank		10 ft^3 Tank with 6 ports (~75Gallons)	1	Each	$ 1,000	$ 1,000	$ 700	Rough Est.
	Expansion Valve		Motor Driven, vacuum rated	1	Each	$ 532	$ 532	$ 372	46005K32
	Evaporator	Tank		1	Each	$ 3,500	$ 3,500	$ 1,500	Estimated
		Ejector Suction Flange	6 " Flange	2	Each	$ 64	$ 128	$ 90	68095K129
		Flange Hardware	3/4" Hardware	16	Each	$ 3	$ 48	$ 34	McMaster
		Thermocouple	Flash tank TC	1	Each	$ 25	$ 25	$ 18	Omega
		Pressure sensor	Vacuum Pressure guage	1	Each	$ 313	$ 313	$ 219	31685K1
	Condensate Pump		High Pressure booster pump	1	Each	$ 517	$ 517	$ 362	4337K12
	Plumbing from Condensate Pump to Boiler	Pipe	Black Sch40 2"	2	Ft	$ 15	$ 29	$ 20	7750K236
		Fittings	Black Sch40 Elbow 2 "	2	Each	$ 12	$ 24	$ 16	44605K119
	Pressure Relief Valve		Automatic Relief Valve	2	Each	$ 20	$ 40	$ 28	9889K19
	Vacuum Relief Valve		Automatic Relief Valve	2	Each	$ 13	$ 26	$ 18	48935K33
Misc									
	Controls			1	Each	$ 1,500	$ 1,500	$ 400	Estimated
	Insulation, gaskets, hardware, stickers			1	Each	$ 2,000	$ 2,000	$ 600	Estimated
	Assy Labor			60	Each	$ 150	$ 9,000	$ 2,700	Estimated
							$99,859	$22,543	Totals

2.2 Mechanical Design and Packaging

Altex created a preliminary mechanical design of the system using Solidworks CAD software. This included a preliminary design of the ejectors, based on engineering drawings provided by ejector manufacturers. These were combined with an evaporator tank, fans, and other major COTS components to create a system model for size evaluation at a size of 25 cooling tons.

Figure 10: Preliminary TRIEST Design

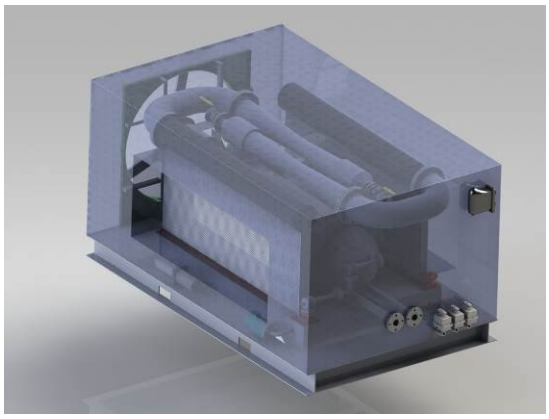

Illustration Credit: Altex Technologies Corp.

Small diameter piping, gages, meters, and fittings have little effect on system volume and were omitted at this time. The result is shown in Figure 10.

Table 4 compares the preliminary TRIEST design to commercially available chillers. The TRIEST concept's footprint and volume were less than that of a comparable capacity Lennox HVAC unit, but larger than the Trane chiller. For an air-cooling final output, the Trane unit would have to be augmented with an additional cooling coil not included in the dimensions below. A production version of TRIEST would use the Trane volume and footprint as goals, to ensure favorable comparison in the marketplace.

Table 4: Size Comparison—TRIEST vs. Commercial HVAC and Chillers

Brand	Model	Technology	Capacity	L	W	H	Footprint	Volume
			tons	*in*	*in*	*in*	*ft^2*	*ft^3*
TRIEST	Concept	SJR	25	130	72.5	68	65.5	370.9
Lennox	SCC288H4M	Central HVAC (MVC)	24	146.4	91.2	66	92.7	510.0
Trane	CGAM	Rooftop Chiller (MVC)	26	114	50.4	84	39.9	279.3

2.3 Preliminary Payback Calculations

As noted in Section 1.1, if the BBEST MGT cannot be operated continuously, BBEST CHP system payback time increases. Altex staff performed a payback analysis based on the preliminary system design, and included available incentives, discount rate, utility costs, and system uptime. For this case, a 10 MMBtu/hr boiler with a Day-averaged rate (ref. Figure 3) of 3.5 MMBtu/hr was assumed. The CHP system cost was estimated as $250K, with an installation cost of $45k. Natural gas cost was set at $0.50/therm, and the payback assumed a new boiler, or a retrofit not being driven by regulatory change (so, no cost offset from a competing burner—this is therefore a conservative estimate for most retrofits). It does include the electrical savings realized from using the MGT exhaust energy instead of the 10 hp electric blower typical of a 10 MMBtu/hr boiler. As shown, boiler uptime was set at 95%, and the payback time for various MGT utilizations was calculated.

Table 5: Uptime Effect on BBEST Payback

			$0.16/ kW-hr elec.	$0.12/ kW-hr elec.
Boiler Operation	**MGT Operation**	**MGT w/ Boiler**	**Payback (years)**	**Payback (years)**
95%	95%	100%	2.0	2.6
95%	75%	79%	2.4	3.2
95%	50%	53%	3.5	4.7
95%	25%	26%	6.8	9.0

As demonstrated in Table 5, if the MGT has the same availability as the boiler burner, the BBEST payback is between two and three years. However, if the MGT can only be operated 50% of the time, payback increases to 3.5 - 4.7 years. Changes in fuel consumption, boiler efficiency, and other factors keep the payback from doubling, as might be expected, but it still marks a considerable increase in payback and might prevent adoption in these variable, low-demand applications.

For an application similar to the Westin hotel, only 0.4-0.6 MMBtu/hr of thermal demand (either continuous or activated at times of low demand) would be necessary to raise the minimum firing rate (shown in Figure 3) to a level that ensures demand for the thermal energy of the MGT. In the case of an industrial installation that does not have round-the-clock demand, the additional load provided by TRIEST would need to consume the steam produced by the full 2.1 MMBtu/hr thermal input of the MGT (actual thermal input to the SJR will be determined by the boiler efficiency, so the exact amount will vary by installation). The payback analysis was repeated, with the addition of a $40K TRIEST installed cost. This analysis assumed that TRIEST

could provide a useful output (e.g. cooled air) at the same price as a conventional system. The results are shown in Table 6, with the previous data for BBEST-only included for comparison.

Table 6: Uptime Effect on BBEST + TRIEST Payback

				$0.16/ kW-hr elec.	$0.12/ kW-hr elec.
	Burner Operation	MGT Operation	MGT w/ Boiler Firing	Payback (years)	Payback (years)
BBEST+ TRIEST	95%	95%	100%	2.2	3.0
BBEST only	95%	95%	100%	2.0	2.6
	95%	75%	79%	2.4	3.2
	95%	50%	53%	3.5	4.7
	95%	25%	26%	6.8	9.0

For the 100% or 75% utilization cases, the payback is only changed -/+ 0.2 years, respectively. Though the reduction in MGT start/stops has durability benefits, it would probably not be worth installing TRIEST with all BBEST systems, unless the cooling benefit was substantially cheaper than conventional systems. However, for lower utilizations, TRIEST is a definite benefit, decreasing 3.5 - 6.8 year paybacks to 2.2 years. This is the market for which TRIEST was intended.

2.4 Capacity Optimization

The initial TRIEST proposal presented an 80-160 cooling tons system as the “full scale” capacity. This device would use all the steam produced from a 10 MMBtu/hr boiler, or all of the excess steam from a boiler operating at lower capacities. SJR-based systems cannot match the COP (cooling output/energy input) of modern high-efficiency MVC-based systems. If only the electric COP (cooling output/electrical energy input) is considered, the SJR systems have a higher COP, since the majority of the energy input comes from the high-pressure, high-temperature motive steam. This steam is not “free”, however. For an installation with an inefficient boiler and low electricity costs, producing cooling with full value steam is more expensive than with an MVC-based chiller.

In contrast, a TRIEST system that uses only the steam derived from the turbine exhaust heat allows 100% turbine availability and ensures maximum benefit at the least capital cost. As noted before, these thermal loads are 0.4-0.6 MMBtu/hr (for the additional load case) or 2.1 MMBtu/hr

(for the full base load case.) These translate to TRIEST cooling capacities of 6.3 and 33.2 tons, respectively, as shown in Table 7[1].

Table 7: TRIEST Capacity Matrix

Thermal Input	Boiler Efficiency	Steam Produced	Steam Energy Content	Assumed Thermal COP	Cooling Capacity
MMBtu/hr	*%*	*lb/hr*	*MMBtu/hr*		*tons*
10	80%	8000	8.8	0.23	168.7
2.1	75%	1575	1.73	0.23	33.2
0.4	75%	300	0.33	0.23	6.3

The proposal narrative noted that an opportunity exists to use the cooling capacity to cool the inlet air of the MGT, thus increasing power output of the MGT. Boiler room temperatures of 90-110°F are not uncommon, and the lower-density hot air will limit the MGT generator's power output. This potential application is discussed in Chapter 4.

[1] The Cooling Capacities were calculated using ejector manufacturers' steam consumption projections. These projections were later found to be slightly high, as described in Chapter 4.

CHAPTER 3:
Test System Design and Build

3.1 Piping and Instrumentation Diagram

To begin the system mechanical design, Altex engineers translated the final CHEMCAD process design that was created in Task 2 into a Piping and Instrumentation Diagram (P&ID), as shown in Figure 11. This P&ID became the guide for pressure drop, pump power consumption, and instrumentation accuracy calculations, which resulted in specifications for the various components.

Figure 11: TRIEST Subscale Piping and Instrumentation Diagram

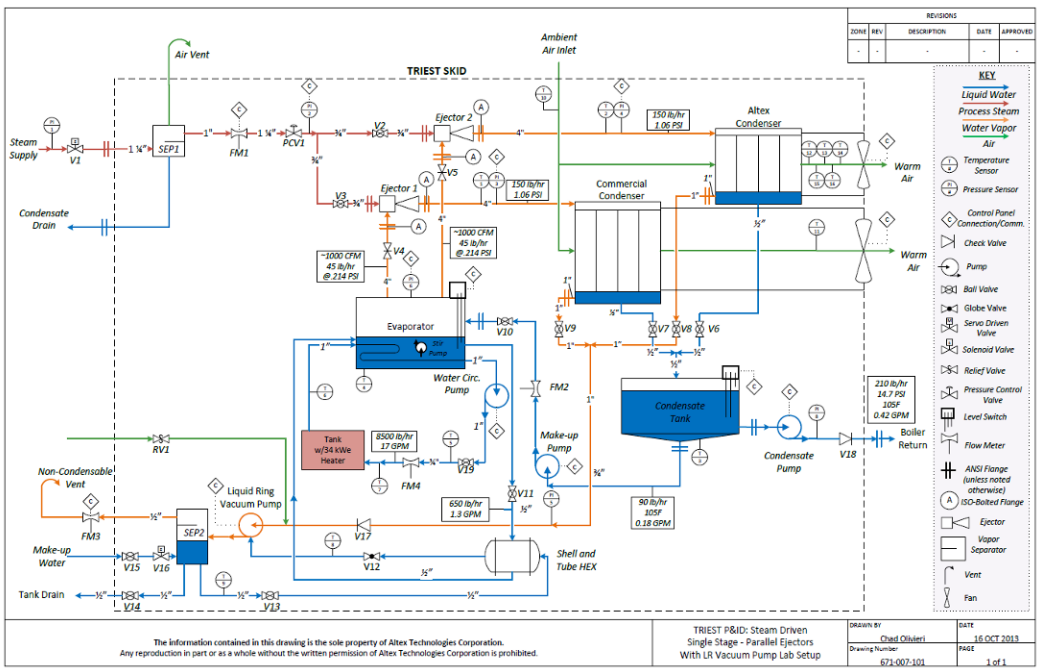

Illustration Credit: Altex Technologies Corp.

3.2 Condenser Design and Fabrication

Altex has designed and previously tested (ref. Chapter 1.4) NISHEX novel heat exchangers that offer low air side pressure drop and a high volume specific heat transfer. For TRIEST, this technology was applied to the condenser, creating the Altex High Efficiency Condenser (AHEC). This technology is also being developed under a Department of Energy project for large-scale dry cooling applications; the DOE effort provided substantial match funding support for TRIEST. The unit designed for TRIEST has a 25 ft^2 face area and a core depth of 2.3 inches (see Figure 12). The expected heat duty of the condenser is 160,000 btu/hr, or 45 kW, at a low enough face velocity to minimize pressure drop. Engineers consulted existing literature on venting and non-condensable evacuation, and included dedicated vent tubes in the design,

which were connected to the LRV. Engineers also designed a support structure that incorporated the condenser, a three blade fan, and ductwork (at right in Figure 12). The frame was analyzed using Solidworks Finite Element Analysis (FEA) tools to verify structural stability and strength, as shown in Figure 13. The chosen three blade fan was oversized and not high-efficiency, but was available to the project at no cost. The fan's control system used a variable frequency drive to modulate speed, so the fan could be slowed down to create the same air flow as a correctly-sized fan.

Figure 12: TRIEST Subscale Piping and Instrumentation Diagram

AHEC Condenser Design

Condenser and Fan Support Design

Figure 13: Condenser and Fan Support FEA Analysis

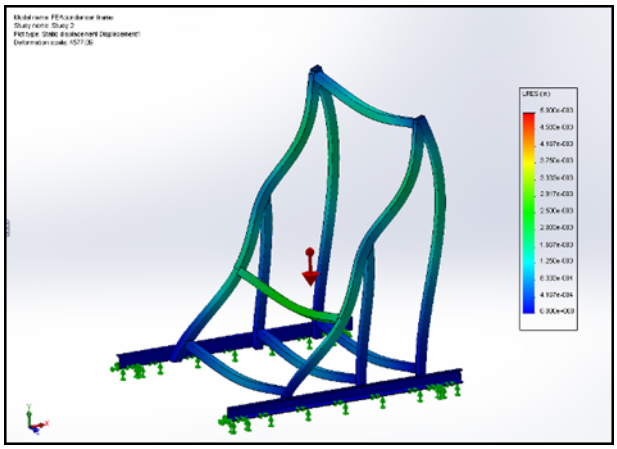

Illustration Credit: Altex Technologies Corp.

The project team chose copper as the primary construction material for the condenser. Copper offers high thermal conductivity and ease of fabrication using hand or furnace soldering. It is a relatively expensive material, but that penalty is offset by decreased prototype fabrication cost. Engineers performed several soldering and tolerance tests to verify materials, processes, and

allowable clearances. Two test pieces are shown in Figure 14, and the tests' conclusions were incorporated in final drawings and instructions to the furnace operator who soldered the core. Engineers also designed a dedicated fixture to assemble the condenser core. The core was furnace brazed, and the completed core is shown in Figure 15. The manifolds, vents, and flanges were then torch-soldered in place and leak tested. Altex's fabrication partners built the support frames and delivered them to Altex for assembly with the fans and condensers (see Figure 16). The condenser and frame were fabricated entirely in California.

By design, the AHEC unit provides 50% of the necessary TRIEST condensing capacity, at 95°F (35°C) ambient air temperatures. Altex procured a second heat exchanger of identical capacity to complete the TRIEST system. This unit had a more conventional round tube and pierced fin architecture, and Altex engineers designed venting modifications to the standard manifolds to allow collection and evacuation of non-condensables. This permitted the conventional coil to function the same as the AHEC unit. The conventional unit was then fabricated by Luvata, and delivered to Altex (see Figure 17). This heat exchanger has a 30 ft^2 face area and a 2.5 inch core thickness; this yields a 30% greater volume than the AHEC unit, for the same designed heat transfer. This dual-condenser system configuration permitted direct comparison of AHEC vs. conventional designs.

Figure 14: Solder Test Results

Left: Fin-to-Tube Coupons; Right: Tube-to-Sheet Test

Illustration Credit: Altex Technologies Corp.

Figure 15: Assembled Condenser Core

Illustration Credit: Altex Technologies Corp.

Figure 16: Condenser Support Frames with Fans Installed

Illustration Credit: Altex Technologies Corp.

Figure 17: Conventional Condenser, Received at Altex

Illustration Credit: Altex Technologies Corp.

3.3 Heading 2

The evaporator contains a process fluid heat exchanger, which is submerged in the chilled water bath. An external pump circulates water through this internal coil, located in the base of the vessel. The ejectors are located at the top of the vessel, mated via ISO-100 flanges with elastomer seals. To increase evaporative surface area while minimizing vessel size, an extended-surface media is supported over the chilled water bath, and an internal pump circulates water over the media. Water vapor is drawn from the media by the ejectors, through a vane-type demister, and then into the low-pressure inlet of the ejectors. Figure 18 shows the evaporator and its key features. The vessel is constructed from 304L stainless steel, and the top and bottom domes are standard pressure vessel heads. The water flow patterns and pressure drops were evaluated using Solidworks Computational Fluid Dynamics (a sample analysis is shown in Figure 19), and the vessel integrity under vacuum and low pressure conditions was verified with FEA, as shown in Figure 19.

Figure 18: TRIEST Evaporator

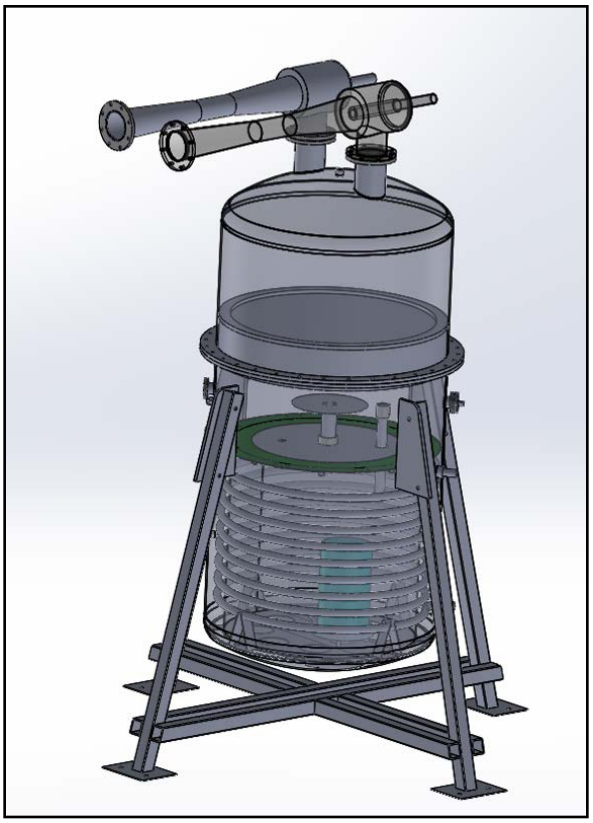

A. Internal Circulation Pump

B. Media Location

C. Demister

D. Ejectors

E. Sight Glass

F. External Water Fittings (3)

G. Electrical Pass-through

H. Structural Support Frame

Illustration Credit: Altex Technologies Corp.

Figure 19: TRIEST Evaporator CFD and FEA Results

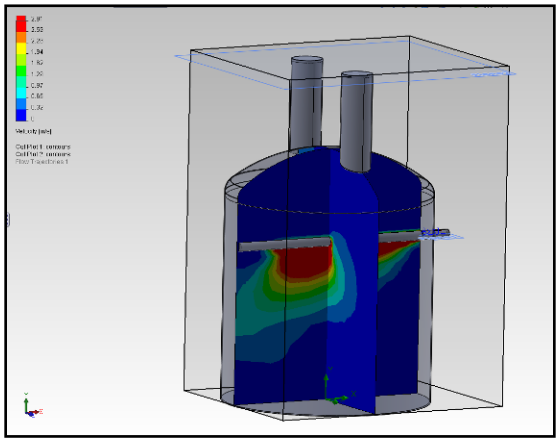

Distribution of Condensate Return Flow

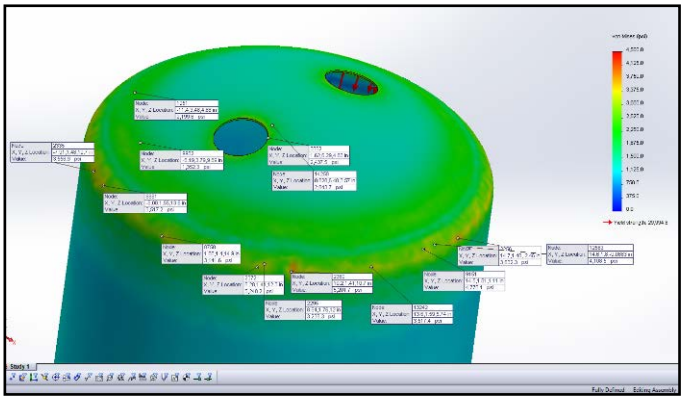

Vessel Head Strength FEA Result

Illustration Credit: Altex Technologies Corp.

Engineers created 3-D models of all components, and then produced manufacturing drawings for fabrication. Over 90% of the parts were procured, fabricated, and/or assembled in California. In-process pictures of the evaporator are shown in Figures 20 and 21.

After consultation with three leaders in the ejector industry, the project team chose Croll-Reynolds as the ejector supplier. The C-R units offered the lowest steam consumption for the specified vacuum conditions and could be fabricated and delivered within the project schedule. C-R was consulted on system non-condensable estimates and LRV selection, and contributed to commercialization activities. The ejectors were delivered to Altex in advance of the evaporator fabrication (see Figure 22), and were used to ensure fitment. After the evaporator was delivered, Altex staff performed various quality checks, installed the internal components, and then assembled the complete unit (see Figure 23). Staff also placed the LRV (Figure 24) and connected it to the condensers, thus completing system assembly, as shown in Figure 25.

Figure 20: Evaporator Inner Structure Assembly – Start of Fabrication

Illustration Credit: Altex Technologies Corp.

Figure 21: Evaporator Vessel – During Final Welding

Illustration Credit: Altex Technologies Corp.

Figure 22: Steam Ejectors, Received at Altex

Illustration Credit: Altex Technologies Corp.

Figure 23: Evaporator Final Assembly at Altex

Illustration Credit: Altex Technologies Corp.

Figure 24: Liquid Ring Vacuum Pump Skid, As-Received at Altex

Illustration Credit: Altex Technologies Corp.

Figure 25: System Assembled with Both Condensers

Illustration Credit: Altex Technologies Corp.

3.4 Facility Build

The preliminary facility planning layout is shown below as Figure 26. Major components are shown in their respective places; the only significant deviation from this plan and the final arrangement was locating the LRV behind the condensers for easier access during testing.

The Altex test facility has a 250 BoHP boiler, which is well sized for evaluation of a CHP system to which TRIEST might be attached, but is capable of a lower pressure, higher flow than the TRIEST requirements. Therefore, Altex subcontracted San Jose Boilerworks (SJBW) to provide a complete 19.5 BoHP boiler skid, which was delivered and installed in August 2013 (see Figure 27). To ensure well-controlled, dry steam, Altex engineers specified a steam supply system, with consulting support from SJBW. The system (See Figure 28) includes a steam trap, two manual condensate drains, a pressure regulator, and electronic steam flow and pressure meters with analog outputs that were connected to the system data acquisition system.

The system data acquisition and controls were based on National Instruments hardware and LabView software, and were configured to operate at a sampling frequency of 1 Hz. The condenser fans and the liquid ring vacuum were speed-controlled using Variable Frequency Drives.

Figure 26: TRIEST Design and Facility Layout

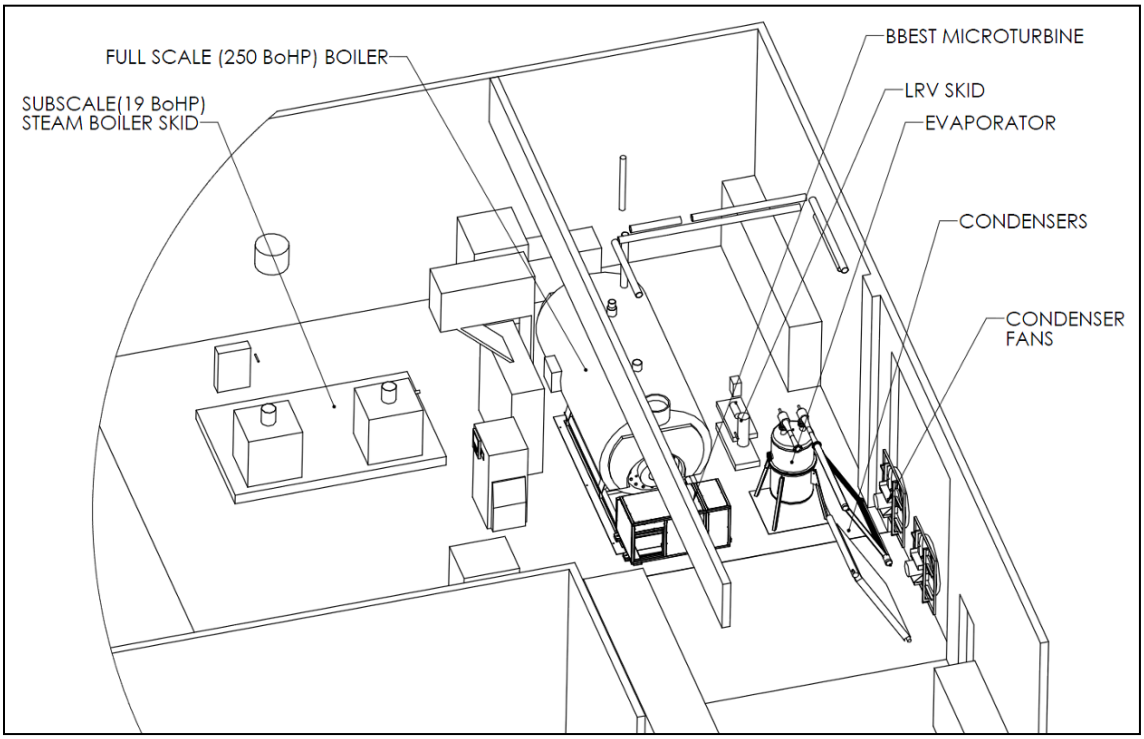

Illustration Credit: Altex Technologies Corp.

Figure 27: Steam System Piping and Electronic Flow Meter

Illustration Credit: Altex Technologies Corp.

CHAPTER 4: Testing

4.1 Preliminary Testing

After the LRV was delivered, Altex technicians built a temporary test apparatus to verify its rated performance. Table 1 summarizes the results, with the critical parameter being the "Vacuum" column. The system's manual gauge was used to measure vacuum, and a rotameter measured outlet flow rate. Non-condensable (air) flow was regulated by a ball valve on the inlet of a vacuum rated pressure vessel, which was pumped down by the LRV. The condenser operating target was 51Torr absolute, equal to approximately 27.9 in Hg vacuum. The LRV achieved 27.5 in Hg vacuum. Considering the accuracy of the manual gage and the imprecise regulation of the inlet flow via the ball valve, the results were judged to be acceptably close to the necessary performance. Full system testing later showed the LRV to be capable of 27.9 in Hg, and even deeper vacuums when the service water was less than 56°F (13.3°C)

Table 8: Liquid Ring Vacuum Pump Test Results

Test #	LRV Motor Speed	Separator Outlet Pr (rated @ 1013 max)	Service H2O Temp	LRV Inlet Vacuum	Sep Outlet Flow
	RPM	*mbara*	*°F (°C)*	*in Hg*	*scfm*
14	3500	1020	56 (13.3)	25	2.25
15	3500	1017	56 (13.3)	25.5	2
16	3500	1014	56 (13.3)	26	1.6
17	3500	1011	56 (13.3)	26.5	1.2
18	3500	1009	56 (13.3)	27	0.8
19	3500	1007	57 (13.9)	27.5	0.55

After the full system was assembled, Altex engineers measured the air-side pressure drop of the AHEC across a range of face velocities. The fan VFD could vary fan speed from 21-100%, and engineers used static pressure probes to measure the pressure drop. Particularly at low flow rates, the velocity was too low to be accurately measured using an anemometer. The inaccuracy was partially attributed to the resistance of the meter itself. Results did not agree with past Altex data from similar core designs. Engineers modified the test apparatus to use a pressure blower, sharp edged orifice, and a bypass valve to deliver a known flowrate to a 12" diameter area of the core. Other areas of the core were blocked off, and the face velocity was accurately measured. The final results are shown in Figure 28.

Figure 28: Air Side Pressure Drop Per Length Comparison, Various Altex Condensers

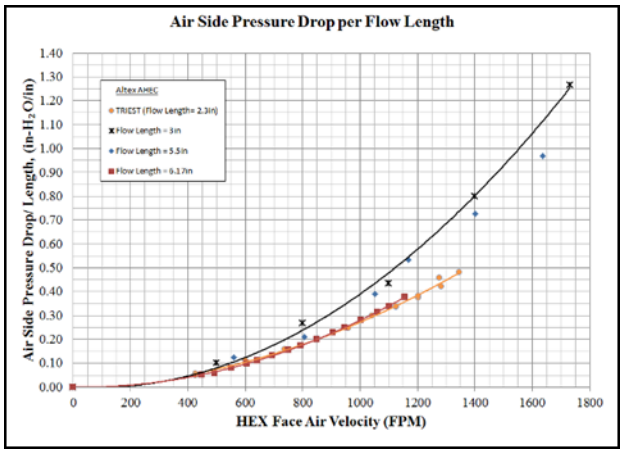

Figure 9 presented subscale test results that were performed in the Altex ASHRAE 33 Standard heat exchanger test facility, which is capable of maintaining more-uniform operating conditions and has venturi flow instrumentation that cannot be used in the larger TRIEST condenser tests. To compare the results from the Navy testing (Figure 9) with the larger AHEC, the Figure 28 results must be corrected for the test article's core depth of 5.5 inches. Using the 800 fpm face velocity test point, the Figure 28 measurement of 1.05 in WC is equivalent to 0.19 in WC per inch of flow length. This agrees well with the 0.18 in WC intercept shown in Figure 9 at 800 fpm. This agreement further validated the TRIEST test data.

4.2 Full System Testing

A Standard Operating Procedure (SOP) was established and followed during system testing. The SOP included checklists to ensure safe and repeatable operation of both the steam boilers and the TRIEST system. The test procedure and operating points did evolve during testing, as engineers determined the test sequence and operating points. Generally speaking, after boiler steam pressure was established, the LRV evacuated the complete system to a pressure less than 60 Torr absolute, and then steam was applied to one ejector. For partial-load testing, the second ejector was isolated by leaving its steam supply and evaporator inlet valves closed; for full-load testing, steam was applied to the ejectors sequentially, with some stabilization time in between. After the system warmed up and all pressures stabilized without an external process load, the test engineer turned on the external water pump, set the water flow rate with a manual valve, and then regulated the load water temperature with the electric heaters. The engineer set a base electrical input, then cycled one heater on and off to achieve a stable process water temperature.

The test matrix began with partial system testing, using one ejector and one condenser. This evaluated the system potential for 50% turndown operation, which is not typically possible with single-ejector SJR systems. This test also allowed comparison of the two condensers. The first tests used the Altex AHEC half of the system, and featured high process water flow rates (23.3 gpm) and an evaporator temperature of 57°F (13.9°C), as compared to the design point of 55°F (12.8°C) (See Figure 29). Cooling performance was near expectations at almost 41,000 btu/hr, or 3.4 cooling tons, as shown in Table 9. The process flow temperatures were higher than typical

chiller or AC operation. As testing progressed to the conventional condenser and then to the full system, engineers made minor improvements to the physical system and the test procedure, which resulted in operating temperatures better representative of commercial chillers. So, the AHEC–only testing was repeated with 12.8 gpm process flow and 52°F (11.1°C) evaporator temperature (see Figure 30). System cooling performance was about 10% lower, but process water outlet temperatures decreased from 75°F to 60°F (23.9 to 15.6°C).

The conventional condenser was tested at the average process flow rate for the two AHEC test point conditions, with slightly lower operating temperatures (see Figure 31). Cooling performance was slightly lower, though it was not possible to conclude if this was caused by a difference in condensers, or by the lower, more-challenging operating temperatures. Considering that the difference was <10%, this may also be reflective of test-to-test variation.

Overall, condenser performance was excellent throughout. Altex had designed and sized both condensers based on a 95°F (35°C) air temperature, but ambient air temperatures were 50-60°F (10-15.6°C) during testing in late November and early December. The oversized condenser fans were also easily capable of supplying the required air flow at 30-40% of maximum speed. As a result, the water vapor was easily condensed and substantially sub-cooled before reaching the condensate tank. Lacking substantially warmer ambient temperatures, the performance limits of the condensers could not be evaluated.

The ejectors were designed to operate at 75 psig, and test engineers generally set the average pressure slightly higher than this, so that normal variations in pressure would not drop below 70 psig. In the conventional condenser test (Figure 31), two steam pressure set points were tested. A 6 psig decrease in steam pressure caused a 5% reduction in steam consumption (see Table 9), and a 5% decrease in cooling capacity. This small change is consistent with the choked flow behavior of the ejector nozzle. In some preliminary tests, the steam boiler could not maintain a stable steam pressure during full load operation, and operating pressure routinely dropped below 70 psig. This problem was later remedied through additional steam supply, prior to the full-load results presented in Figures 32-34. During the low-pressure dips, engineers observed a strong correlation between low steam supply and an increase in evaporator pressure (sometimes as much as doubling it, from 10 to 20 Torr absolutea).

For full load testing, engineers tested the system with 18.7 and 23.8 gpm flow rates and 48-49.5°F (8.9 – 9.7°C) evaporator temperatures (an improved, lower temperature than the original system target of 55°F or 12.8°C). Cooling performance with both ejectors and condensers was not doubled as compared to the single condenser tests. Condenser and evaporator pressures were at, or better (i.e. below), then the design point, so the evaporator was likely to be the limiting component. Figure 32 illustrates a high process flow case, where 23.8 gpm of process water was chilled from 66 to 61°F (18.8-16.1°C). As in the single ejector/condenser tests, two steam pressures were tested. The lower pressure had lower steam consumption, as expected, but cooling performance was actually better at the lower, rated condition. Since an increase in steam pressure above the rated pressure has little effect on cooling performance, and a decrease below rated pressure had a strongly negative effect, it appears that regulation or control of a SJR system via steam pressure would not be effective. This is consistent with published literature

and manufacturer experience. In all subsequent tests, engineers maintained average steam pressures between 74 and 79 psig.

Engineers also operated the system with 18.7 gpm process flow, and achieved higher cooling performance. As shown in Figure 33, the evaporator was operated at 48°F (8.9°C), and achieved 5.4 cooling tons (see Table 9). When the evaporator temperature was raised to 55°F (12.8°C), the process water temperature increased by a similar margin, but was able to cool an additional 0.7°F (.4°C), as shown in Figure 34, thus increasing total performance to 5.9 tons. Overall, the system operated stably and reliably, and required little input from engineers during testing. The large mass of water in the evaporator had a capacitive effect, damping out the step changes in thermal input from the process load heaters. The process load tank had a similar effect—step changes in the hot process temperature did not cause rapid changes of similar magnitude in the evaporator temperature. This behavior is well suited to a base load application, where the TRIEST system would supplement a larger chiller system.

As noted previously, SJR's are often used for batch-type processes, where a fixed mass of liquid is chilled, rather than the continuous process used by a chiller or AC system. For batch concentration of pasteurized juices, the evaporation simultaneously chills and concentrates the water-based solution. The intermittent operation also minimizes steam production cost. Furthermore, for solutions with a high initial temperature, the SJR is likely to have a lower specific steam consumption (steam consumption per kW of chilling) since the vapor pressure at higher temperatures is much closer to the SJR outlet pressure, and less pumping work is required of the ejector (s). Multiple primary ejectors, such as those shown in Figure 5, are often used in this application.

To simulate a batch process with TRIEST, though without the high initial fluid temperature, the process water heaters and pumps were turned off, but steam supply was maintained to the ejectors (See Figure 35). The mass of evaporator water and process water inside the evaporator was then chilled over a measured time period. As shown in Table 10, the process water initial temperature was taken to be the mid-point of the inlet and outlet temperatures at the beginning of the time period; its final temperature was measured when the pump was restarted and the chilled water was pumped across the process load inlet thermocouple. The evaporator temperature was measured directly in the evaporator, since the internal circulation pump maintains a uniform temperature within the vessel. Volumes and masses of the water were determined from the CAD models of the various components. As Figure 35 and Table 10 show, the TRIEST system chilled the combined 650 pounds of water to 39°F (3.9°C) in less than 11 minutes, for a total heat removal of 11.7 kW.

Table 9: TRIEST System Performance Summary

Test Point	Process Flow	Load dT	Cooling Effect	Cooling Effect	Cooling Effect	Steam Flow	Steam Pressure	Evap Water T
	gpm	*°F (°C)*	*Btu/hr*	*Tons*	*kWt*	*lbs/hr*	*psig*	*F*
Partial (Altex)	23.3	3.48 (1.9)	40,574	3.38	11.9	107.5	81.4	57.4 (14.1)
Partial (Altex)	12.8	5.94 (3.3)	38,136	3.18	11.18	97.8	74.6	52.2 (11.2)
Partial (Conv.)	16.7	4.23 (2.4)	35,433	2.95	10.38	108.4	84.2	47.9 (8.8)
Partial (Conv.)	16.7	4.02 (2.2)	33,674	2.81	9.87	102.6	78.3	48.2 (9.0)
Full	18.7	7.61 (4.2)	71,020	5.92	20.8	210.2	75.9	55.3 (12.9)
Full	18.7	6.95 (3.9)	64,861	5.41	19.0	216.3	78.7	48.0 (8.9)
Full	23.8	4.98 (2.8)	59,260	4.94	17.4	219.1	79.2	48.2 (9.0)
Full	23.8	5.11 (2.8)	60,807	5.07	17.8	205.8	74.5	49.5 (9.7)
Full (Batch)	0	N/A	40,069	3.34	11.7	214.6	77.3	N/A

Table 10: TRIEST Batch Cooling Simulation

	Mass	dT	Heat Removed	Elapsed Time	Cooling	Cooling
	lb	*°F (°C)*	*Btu*	*minutes*	*Btu/hr*	*kWt*
Evap Water	633.8	10.8 (6)	6845.0	10:49	38,028	11.1
Process Water	15.7	23.4 (13)	367.4	10:49	2,041	0.6
Total					**40,069**	**11.7**

Figure 29: Part-Capacity Testing – Altex Condenser, High Water Flow

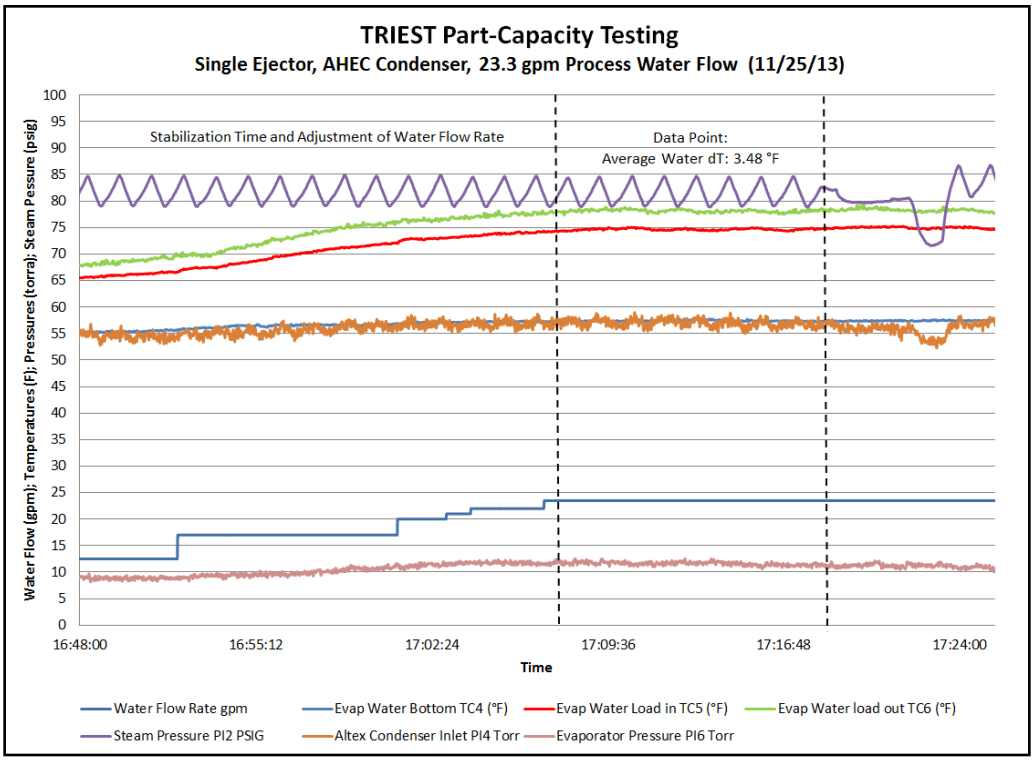

Figure 30: Part-Capacity Testing – Altex Condenser, Low Water Flow

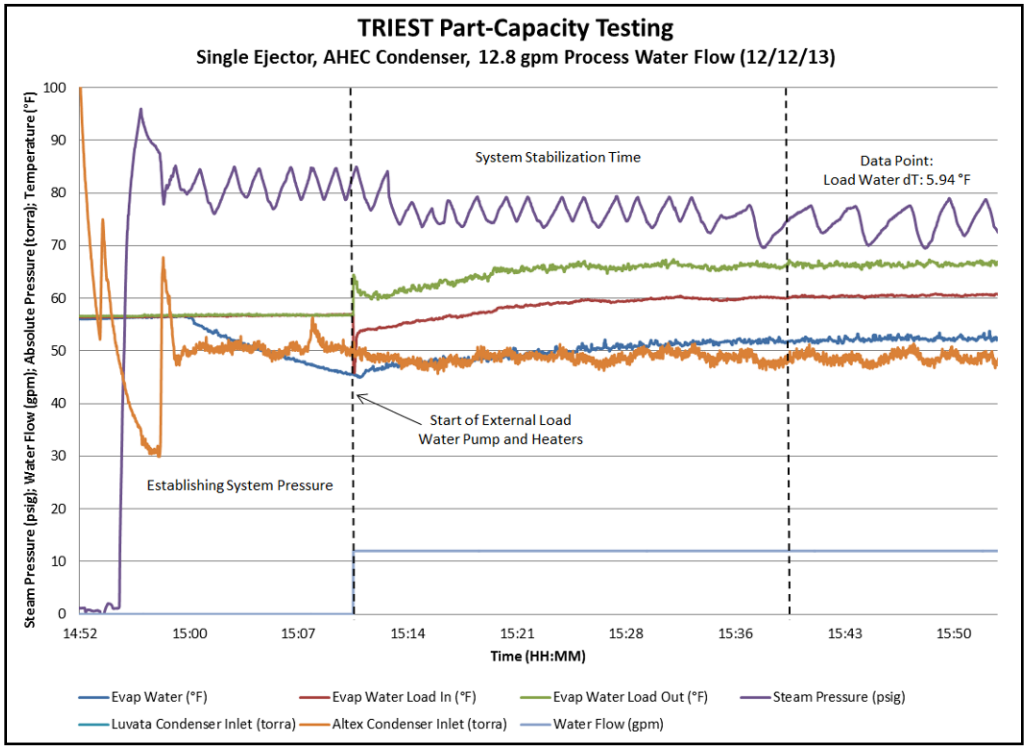

Figure 31: Part-Capacity Testing—Conventional Condenser, Medium Water Flow

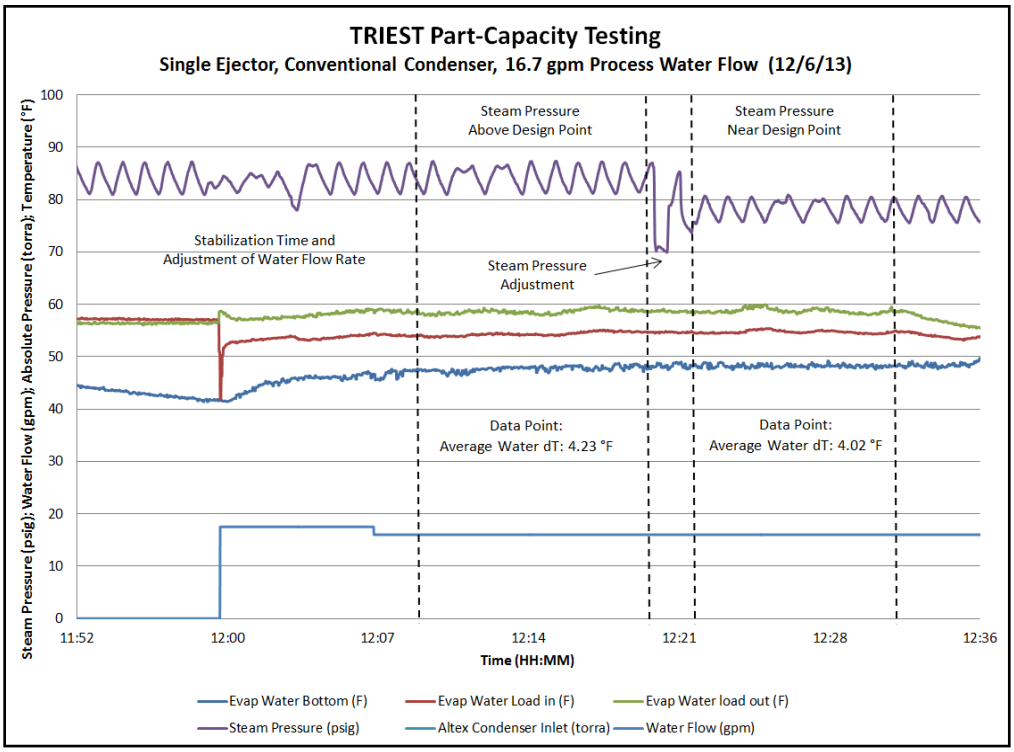

Figure 32: Full Capacity Testing—High Water Flow

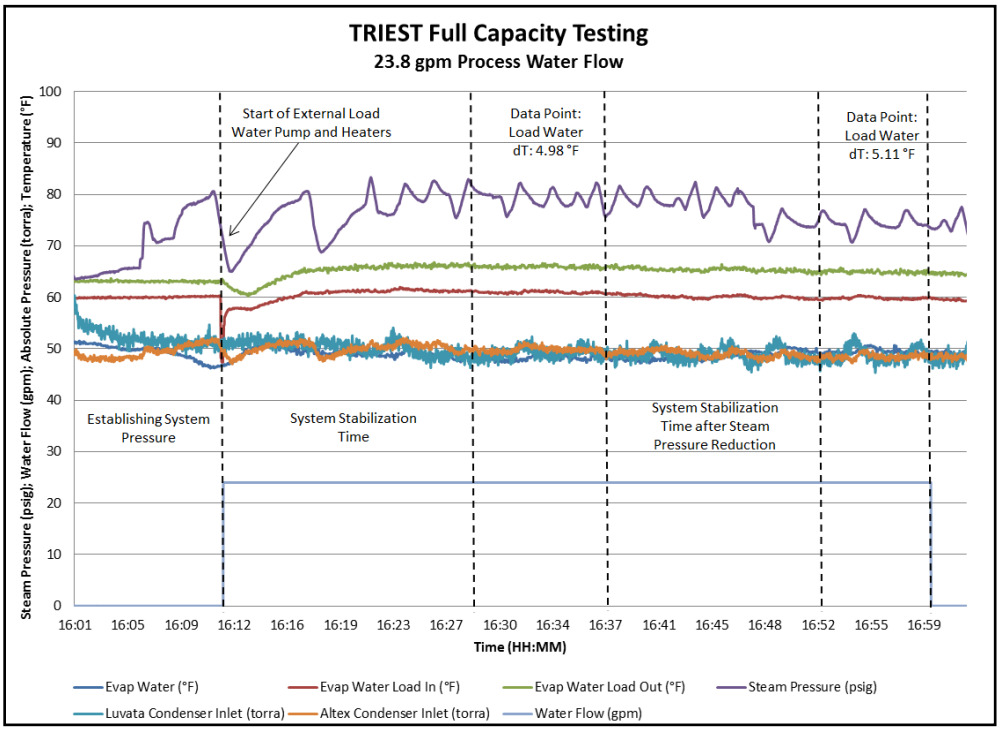

Figure 33: Full Capacity Testing—Medium Water Flow, 48°F (8.9°) Evaporator

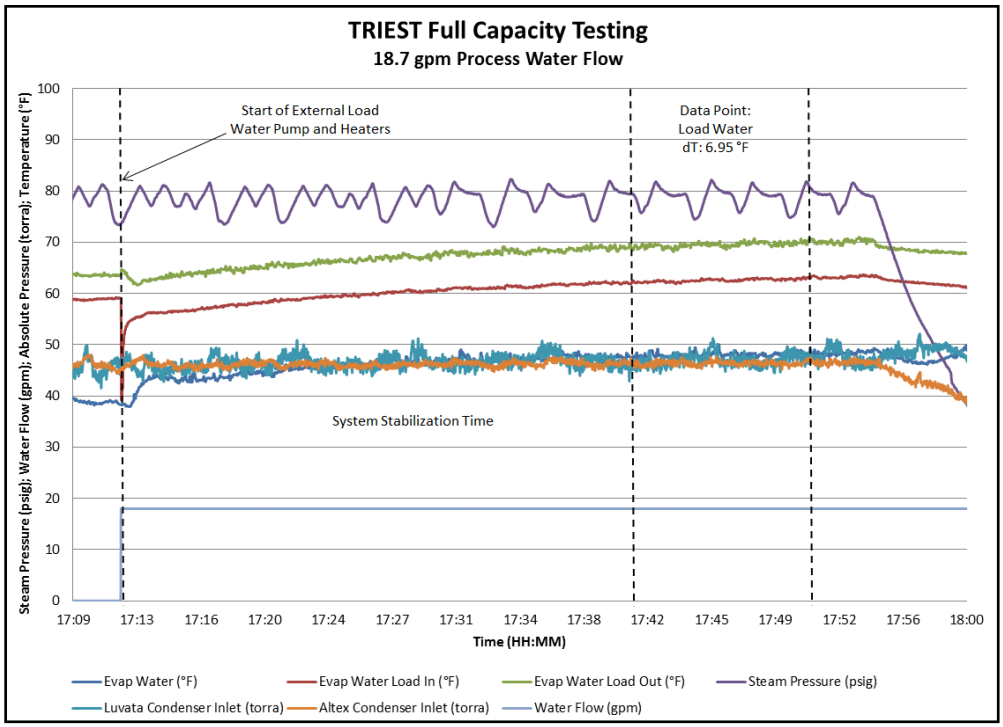

Figure 34: Full Capacity Testing—Medium Water Flow, 55°F (12.8°C) Evaporator

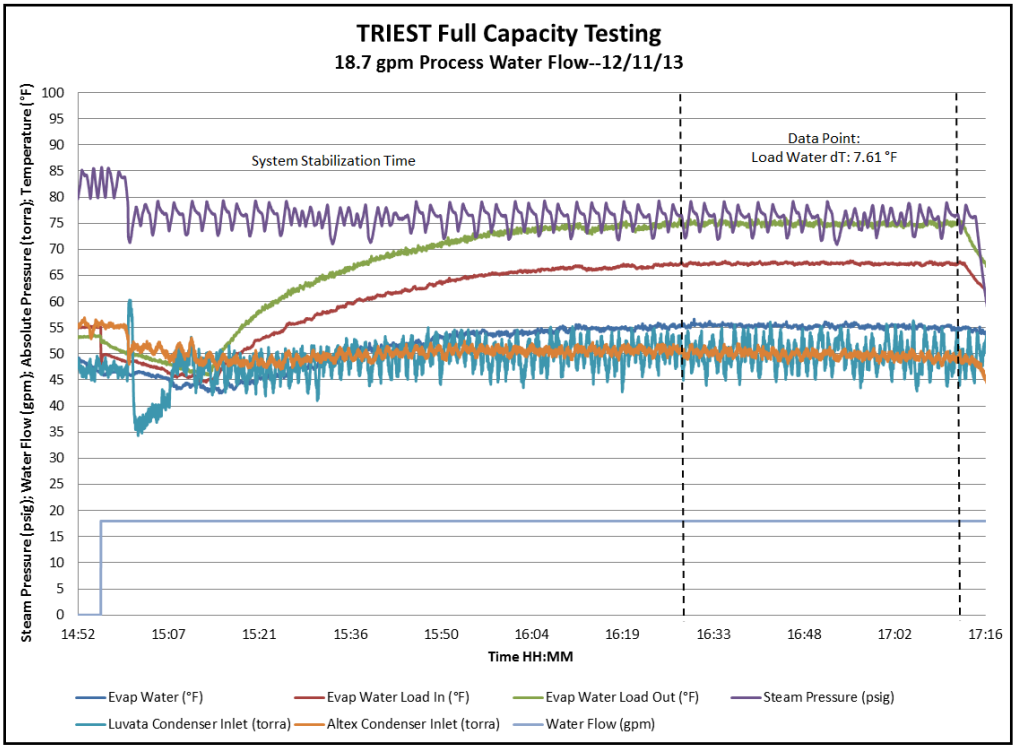

Figure 35: Full Capacity Testing—Batch Cooling Simulation

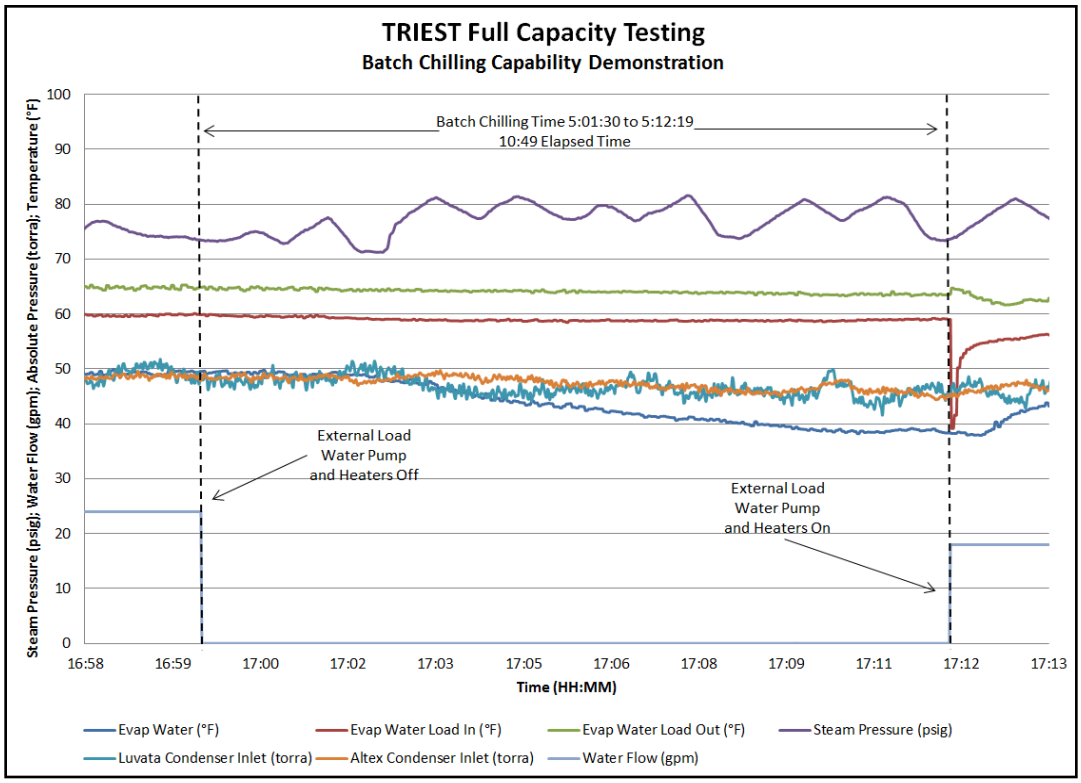

4.3 Testing Discussion and Conclusions

As summarized in Table 9, the system achieved a best performance of 5.9 cooling tons, when operated at design-point pressures, and higher-than designed temperatures. The total system performance was slightly less than would be predicted by the sum of the two "halves" of the system, when operating under similar conditions. When operated near the design-point temperatures, which are similar to conventional chillers, peak performance measured was 5.4 cooling tons. The overall expectation for the system was that it would achieve 6-7 tons, and so results were slightly under expectations.

Since the cooling of individual ejector/condenser pairs, when added together, slightly out-performed the full system results, and since system pressures met the design points, the limiting factor on cooling was likely the water surface available for evaporation in the evaporator. If the surface area is undersized, it would not be possible to evaporate the 90 lbs/hr of water required to achieve a net 7 tons cooling effect. In future tests, the surface area could be increased within the existing vessel by adding more wetted media volume, or a slightly larger diameter vessel could be built, thus increasing the water surface area and providing room for more media.

Evaporation rate measurement was included in the test plan and instrumentation, but was not successful during actual testing. Evaporator water level was monitored with a level probe,

custom-sized for the vessel. The probe was calibrated prior to installation, and initial data from it was consistent with expected level changes in the vessel. A water flowmeter (shown as FM2 in Figure 11), also calibrated prior to installation, measured the condensed water being returned to the vessel. The water flow could be varied using a needle valve (V10 in Figure 11). The intent was to regulate condensate flow to maintain a steady water level in the evaporator, and then read the flow rate from the meter, thus determining the evaporation rate. However, the level reading became suspect during the partial load testing. The flowmeter calibration was verified, and the level probe malfunction was verified by adding or subtracting known amounts of water from the vessel, and comparing the sensor reading to expected values. Unfortunately, a replacement custom sensor could not be received in time to complete testing, and so evaporation could not be quantified by this method. To ensure proper water level during testing, the test operator checked the level before the test start, and then adjusted the condensate return flow to the theoretical value. For the three to six hour duration of a test, this method was sufficiently accurate to maintain the water level within +/- 1.5 inches of nominal (as verified by checking water at the end of test), but not accurate enough to quantify evaporation rate mid-test.

It is worthwhile to note that all cooling duties shown are net values, in that they represent the true useful output of the evaporator. As shown in Figure 11, the evaporator has three thermal inputs in addition to the process flow: the internal circulation pump submerged in the tank; the cold-side water for the LRV seal water heat exchanger; and finally, the condensate return from the condenser(s). The evaporation rate specified in the process design did consider all of these additional thermal duties, and they are believed to have been at or below the rated heat duties, based on temperature and current measurements of the various flows and pumps, respectively.

4.4 Coefficient of Performance Calculation

The performance of chillers and other refrigeration equipment is often expressed as a Coefficient of Performance (COP), which is the useful output divided by the power input. For a MVC-type system, the input is only electrical. TRIEST has both thermal and electric inputs, and so COP can be expressed as a total COPtotal, or an electric-only COPelec.

The thermal input to the system is the steam flow, which is includes the latent and sensible heat in the steam as-delivered to the system inlet. The electrical input to TRIEST is, in order of power consumption:

- Condenser fan(s)
- Liquid Ring Vacuum pump
- Internal circulation pump
- Condensate return pump
- Seal water heat exchanger pump

As noted previously, the condenser fans were intentionally oversized, and so their actual power consumption was not a true reflection of those that would be used in a field-installed system.

Engineers used the measured face velocity and pressure drop shown in Figure 28 to specify a high efficiency fan for the application, and that power consumption was used in COP calculations. The LRV current and voltage were measured during testing to determine the pump's power consumption. The smaller pumps, which have only minor consumption, were rated at their nominal power draw.

Table 11: Coefficient of Performance Calculations

Test Point	Cooling	Steam Flow	Steam Power	Elec Power	COPtotal (thermal +electric)	COPelec (electric only)
	kWt	*lbs/hr*	*kWt*	*kWe*		
Partial (Altex)	11.9	107.5	35.2	3.0	0.31	3.96
Partial (Altex)	11.18	97.8	32.0	3.0	0.32	3.73
Partial (Conv.)	10.38	108.4	35.5	3.0	0.27	3.46
Partial (Conv.)	9.87	102.6	33.6	3.0	0.27	3.29
Full	20.8	210.2	68.8	3.9	0.29	5.30
Full	19.0	216.3	70.8	3.9	0.25	4.84
Full	17.4	219.1	71.7	3.9	0.23	4.42
Full	17.8	205.8	67.4	3.9	0.25	4.53
Full (Batch)	11.7	214.6	70.3	3.9	0.16	2.99

As shown in Table 11, the highest COP_{total} attained was 0.32, operating the system at part load with the Altex condenser. Peak COP_{elec} of 5.3 was achieved at full load. All of the full load continuous process points have a much higher COP_{elec} than conventional, MVC-driven systems. For applications where steam is a waste product or has very low cost, the TRIEST system has a clear operating cost advantage over an MVC.

As noted previously, Altex created a process model in CHEMCAD that relied on ejector steam consumption and operating pressures provided by manufacturers. The subscale system used a properly-sized LRV, minimized non-condensable flow, and included ejectors from Croll-Reynolds that were projected to have a lower steam consumption than those assumed in the CHEMCAD model. The model predicted a thermal COP of 0.23 and a steam consumption at seven tons capacity of 279 lb/hr (at the same target condenser pressure as the tested system). As shown in Table 11, the actual, total system COPtotal was 0.25-0.32. From a specific steam consumption standpoint, the model predicted 279 lb/7 tons cooling = 39.8 lb/ton; the actual system achieved 30.7 lbs/ton at part load and 35.5 lbs/ton at full load. This performance will lower the expected operating cost/ton.

In summary, the TRIEST system achieved the following:

- Stable operation at peak and half capacity
- Peak COP_{total} of 0.32 and peak COP_{elec} of 5.30
- 5.9 cooling tons peak output
- Process water flows of 12.8-23.8 gpm, and differential temperatures of 3.5 - 7.6°F (1.9 – 4.2°C)
- Process water temperatures of 60°F (15.6°C)or less under both full and part-load conditions
- Batch cooling capacity below 39°F (3.9°C)

CHAPTER 5:
Cost and Performance Evaluation

5.1 Overview

The initial project proposal described a "full scale" system of 80-160 cooling tons capacity, and a "subscale" system of 30 tons. To fit the available funding from the Public Interest Energy Research Program the time of award, the full scale TRIEST system build was removed from the project scope.

The Task 2 analysis showed that an 80-160 ton unit would not have a sufficient operating cost advantage over a mechanical vapor compression (MVC) chiller to justify the capital expense, and the capacity may also have been excessive for the demand present at many facilities. A 25 ton unit was then considered as a "full scale" system. This would utilize the complete steam production of a boiler equipped with BBEST, which delivers 2.1 MMBtu/hr thermal input to the boiler. Continuous full steam utilization supports 100% turbine uptime and continuous generation of 100 kW electric power under nominal operating conditions. Continuous operation of low-cost electricity will achieve the fastest possible payback of a CHP system investment.

An analysis of operating data from the Westin Hotel in Costa Mesa, CA (where the first BBEST system is installed), showed that there was an all-day, year-long thermal demand on the boiler. However, this demand was marginal (at or below 2.1 MMBtu/hr) for full-time turbine operation in the warm-weather overnight period, as represented by the lowest two fit lines in Figure 3. A low, continuous demand like this is common to boilers that operate in a warm standby mode—on-demand steam is required and a low firing rate is required to offset boiler thermal inefficiencies due to shell, stack, blowdown, and un-insulated piping losses. In the case of the Westin, adding a steam demand equivalent to a 300,000- 400,000 BTU/hr input to the boiler would increase base load above the 2.1MMBtu/hr CHP system input and ensure continuous electric generation. Task 2 analysis equated a 400,000 btu/hr thermal input to a 6.3 ton TRIEST, and so this was the target of the Task 3 design, build, and test activities.

5.2 Testing Results and Review of Modeling Assumptions

As noted above, the subscale system achieved better specific steam consumption (30-35 lbs/cooling ton) than originally modeled. This resulted in measured COP_{th} of 0.27 - 0.32. Best results were achieved at the partial load condition using the Altex-designed condenser. With some improvements to this initial evaporator design, and use of Altex condensers for all condensing duty, it is reasonable to assume that a 0.35 COP_{th} could be achieved at all loads, and this value was used the analyses below.

During the project, Altex also obtained additional data from the BBEST field installation, particularly regarding boiler efficiency when operating with the BBEST CHP system. The Task 2 analysis assumed 75% boiler efficiency under turbine-only CHP operation, and 80% efficiency at higher firing rates. Southern California Gas (SCG) conducted an efficiency/emissions audit of the Bryan boiler after the BBEST system was installed, and results are shown below in Figure

36. The blue and red "2012" bars reflect the boiler performance with the BBEST system. The "AT" and "IST" data were generated from two different sets of instrumentation used by SCG in their audit. The green "2010" bars are pre-retrofit data, also recorded by SCG. Firing rate data was not consistently acquired by the auditors, so the test points are expressed as "Low", "Medium", and "High" to avoid confusion. The "Turbine only" data reflects operation with only the 2.1 MMBtu/hr input to the boiler from the turbine exhaust.

Figure 36: SCG Test Report Excerpt—All Sourced from SCG-EAC Draft Report

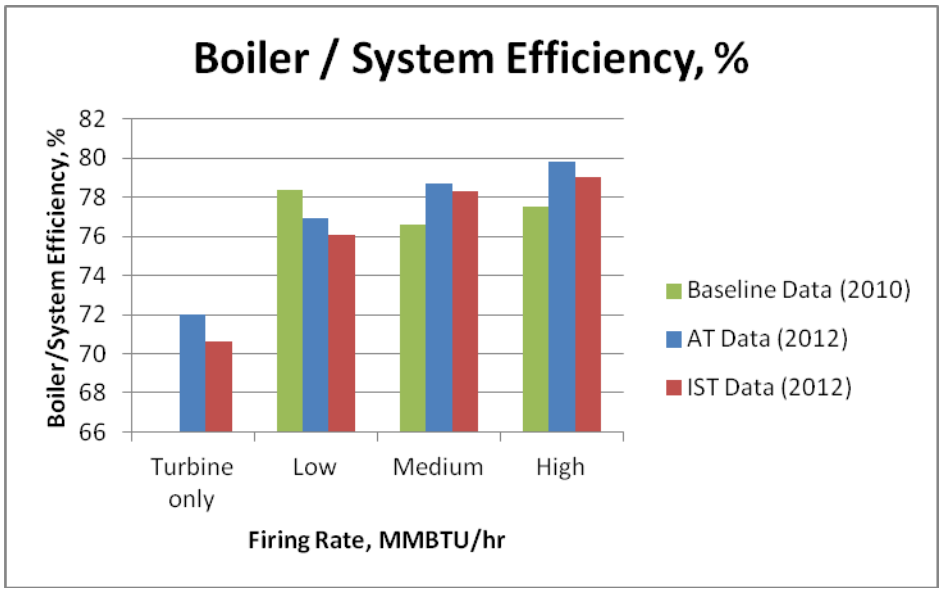

Combustion Efficiency

Chart above compares the combustion efficiency of the boiler. Average baseline data efficiency was 77.5% while recent test shows average efficiency of 76.9 and 76 % efficiency, for AT and IST data, respectively. It is observed that the highest efficiency occurs at higher firing rates (6.3 MMBtu/hr, AT data) with 79.8% efficiency as the maximum value.

All efficiencies were lower than assumed in the Task 2 process design, which is to be expected with this particular boiler, which was built and installed in 1974. Replacement of the old burner with BBEST did improve efficiency at mid and high firing rates by 2-3%, which satisfies one of the TRIEST/BBEST system goals. The turbine-only operation was found to be about 8% less efficient than maximum efficiency.

Field experience also reinforced the importance of continuous generation from a CHP-coupled system. If thermal input exceeds thermal demand and the boiler reaches maximum temperature or pressure, the MGT must be either turned off or slowed down to a less-efficient speed. Less-efficient generation hurts payback time and complicates the control system. To simplify control, the BBEST system completely stops the MGT and waits for boiler pressure to decrease as steam demand depletes the available stored energy. The time required to stop and then restart the unit can be 15-20 minutes. During this restart period, particularly if demand increases, boiler

pressure can decrease enough to disrupt facility operations. Continuous MGT operation would reduce these service disruptions.

Table 12 summarizes the refined operating assumptions for TRIEST. The 160 ton TRIEST has been removed from consideration, the TRIEST COP_{th} has been updated, and boiler efficiencies have been adjusted to reflect a boiler with performance better than the 39-year-old unit at Westin, but not as good as the state-of-the-art values used previously. An additional, even lower capacity TRIEST has also been added to the matrix, consistent with the half-load test data.

Table 12: Revised TRIEST Capacity Matrix

Thermal Input	Boiler Efficiency	Steam Produced	Steam Energy Content	Thermal COP_{th}	Cooling Capacity
MMBtu/hr	*%*	*lb/hr*	*MMBtu/hr*		*tons*
2.1	73%	1533	1.69	0.35	50
0.34	73%	248	0.27	0.35	8.0
0.15	73%	110	0.12	0.35	3.5

5.3 Capacity Overview

The three capacities (50, 8.0, and 3.5 tons) shown in Table 12 will be examined in this section. The latter two offer the most promising economic results.

The 50 ton unit would consume all of the steam produced by the MGT operation, and guarantee the full-time CHP operation. Practically speaking, this creates a system that operates as a gas-fired generator and chiller at times of zero steam demand. It offers a minimal operating cost advantage vs. purchasing electricity from the grid (both to meet facility needs and to power an existing, modern MVC chiller.)

The 8.0 ton unit would add a 340,000 btu/hr base load to a boiler. Referring to Figure 3, this would shift the operating profile from the green 2.0 MMBtu/hr average profile line to the red 2.34 MMBtu/hr profile line. This result is consistent with the intent of the previous 6.3 ton system target, but input and output power levels have been adjusted based on the improved COP_{th}.

The 3.5 ton concept is based on the successful part-load testing. This capacity offers a much smaller base load addition, but is well sized to serve as a turbine inlet air cooler. For boiler room installations where an external air duct cannot be installed to supply cool combustion air to the turbine, or for consistently hot climates, generator power is decreased due to the decreased air density supply to the turbine compressor (which is a constant-volume device when operated at constant rotational speed.) Like any other decrease in electrical output, this slows CHP payback time.

When used as a turbine inlet air cooler, the chilled water from TRIEST would be routed to a heat exchanger in the inlet air duct of the MGT, cooling the air and increasing its density. The 3.5 ton (42,000 btu/hr) capacity is sufficient to restore power output to at least 100kW at air temperatures up to 96°F (35.6°C). The 3.5 ton TRIEST would be physically smaller than the 8.0 ton unit, and would not necessarily have to interface with the facility's chilled water system, unless that additional flexibility was also desired. From a seasonal perspective, the low steam demand/high ambient temperature match is also attractive.

5.4 Cost Targets

The cost targets estimated for the three proposed capacities are shown in Table 13. All capacities assume that Altex heat exchangers will be used as condensers, and will be evacuated by an appropriately-sized LRV. The LRV skid purchased for the subscale TRIEST included dedicated controls and a seal-water heat exchanger. The production versions of TRIEST would integrate the LRV controls with the system controls, and would integrate the heat exchanger within the evaporator. The LRV costs projected below thus reflect the LRV (pump and motor), an outlet air/water separator, and miscellaneous mounts and wiring connections. The 3.5 ton system assumes a single ejector/single condenser configuration. The two higher capacity units would use two of each, scaled appropriately.

Table 13: System Cost Targets, Various TRIEST Capacities

	Capacity		
	3.5 Tons	**8 Tons**	**50 tons**
Ejectors	750	1,500	5,176
Evaporator	2,500	4,800	16,565
Condenser	3,500	7,000	24,157
Fans & Pumps	800	1,500	5,176
LRV	3,000	3,500	7,000
Enclosure & Piping	600	800	2,761
Controls & Electronics	600	750	1,000
Assembly & Test	1,200	1,500	2,100
MGT Inlet HX	450		
25% Margin/Profit	3,238	5,338	15,984
Estimated Installation	5,000	9,000	20,000

Total	$21,638	$35,688	$79,919

5.5 Payback Evaluation

The payback evaluation of each unit assumed the following:

- Natural gas priced at $0.50 per therm
- Competitive, existing MVC chiller operating at an average COP_{elec} of 3.0
- Grid electricity priced at $0.12 kw-hr
- 73% boiler efficiency
- BBEST CHP cost (capital, installation, maintenance) is included in a $0.07/kw-hr loaded cost of electricity (LCOE)
- TRIEST electrical usage is 24.5, 4, and 3 kW for the 50, 8.0, and 3.5 ton units, respectively

The above boiler assumptions, with typical operating pressures and condensate temperatures, yield a cost of $7.19 per 1,000 lbs of steam generated.

Table 14 presents the effect of CHP uptime on payback of the BBEST system. These projections are similar to those determined in Task 2, though the model has been simplified to remove assumptions regarding future available CHP incentives. The resulting payback times are approximately 10% longer. The model was also updated to include the installed cost and operating savings of TRIEST, as will be seen in Tables 15-17.

Table 14: Uptime Effect on BBEST-only Payback

Boiler Operation	MGT Operation	MGT w/ Boiler	Payback (years)
95%	95%	100%	2.8
95%	75%	79%	3.5
95%	50%	53%	5.3
95%	25%	26%	10.7

For the 50 ton case (with no steam demand), the TRIEST system consumes $2.94/hr in electricity and $12.75 in natural gas (based on total MGT input of 2.55 MMBtu/hr NG), and produces 50 tons cooling and 100 kWe of electricity at a total cost of **$15.69**/hr. The alternative case would be an MVC chiller operating at 50 ton output, consuming $6.87/hr in electricity. The grid-purchased 100 kWe would cost $12/hr, for a total expense of **$18.87**/hr. This yields a net savings of **$3.18/hr** for TRIEST+BBEST. The calculated payback times are shown in Table 15.

Table 15: BBEST+50 ton TRIEST Payback

	No TRIEST	No TRIEST	No TRIEST	With TRIEST	With TRIEST	With TRIEST
Boiler Operation	>2.1 MMBtu/hr Facility Demand	MGT w/ Boiler	Payback (years)	>2.1 MMBtu/hr Total Demand	MGT w/ Boiler	Payback (years)
95%	95%	100%	2.8	95%	100%	3.6
95%	75%	79%	3.5	95%	100%	4.2
95%	50%	53%	5.3	95%	100%	5.5
95%	25%	26%	10.7	95%	100%	7.9

For facilities whose steam demand is less than 2.1 MMBtu/hr for 26% or less of the year, a 50 ton TRIEST does improve payback, but it is still too high at 7.9 years. For all other cases, the $3.18/hr savings using TRIEST is not enough to pay back the required $80k investment versus BBEST alone.

Other situations might offer better payback. For example, an installation that had a $0.16/kw-hr electricity cost (instead of $0.12/kw-hr), hourly savings would increase to $8.50. Payback of any TRIEST installation would also be improved if the site was already planning to increase cooling capacity. The capital cost of TRIEST would then be partially defrayed by avoiding the purchase of an additional MVC-based chiller.

Potential market size must also be considered in any of these simulations. For the values shown in Table 15 to be valid, the facility must have a simultaneous need for 100 kW electricity and 50 tons of cooling, but no steam demand. If these three base load conditions cannot be simultaneously met, the potential savings would have to be adjusted downward.

The steam demand profile that supports the 8.0 ton TRIEST is likely more common, and offers a more realistic path towards broad TRIEST product acceptance. This unit would consume $0.48/hr in electricity and $12.75 in natural gas, and produce 8.0 tons cooling, 100 kWe of electricity, and 1225 lbs of facility-demanded steam at a total cost of **$13.23**/hr. The alternative case would be an MVC chiller producing 8.0 tons of cooling by consuming $1.12/hr in electricity; purchasing 100kWe for $12/hr; and producing 1,225 lbs of facility-demanded steam by consuming $8.81 in natural gas. Total expense would be **$21.93**/hr. This yields a net savings of **$8.70**/hr for TRIEST+BBEST. The resultant payback times are shown in Table 16.

Table 16: BBEST+8.0 ton TRIEST Payback

	No TRIEST	No TRIEST	No TRIEST	With TRIEST	With TRIEST	With TRIEST
Boiler Operation	**>2.1 MMBtu/hr Facility Demand**	**MGT w/ Boiler**	**Payback (years)**	**>2.1 MMBtu/hr Total Demand**	**MGT w/ Boiler**	**Payback (years)**
95%	95%	100%	2.8	95%	100%	3.1
95%	75%	79%	3.5	95%	100%	3.3
95%	50%	53%	5.3	95%	100%	3.7
95%	25%	26%	10.7	95%	100%	4.1

For this case, the addition of TRIEST improves payback in most installations with marginal demand. If TRIEST's footprint and cooling system interface can be accommodated in the facility, its addition provides an economic benefit. As with the 50 ton case, the payback of BBEST and BBEST+TRIEST will be even better if electricity costs are higher than assumed, or when the purchase of either unit avoids the acquisition of a piece of capital equipment (boiler burner or chiller) that does not offer a payback.

The 3.5 ton concept offers only a small (150,000 btu/hr) thermal input to the boiler, which is unlikely to add enough thermal demand to truly ensure continuous operation of a borderline demand situation. However, as an inlet air cooler, a TRIEST system could counteract the high ambient temperatures experienced in boiler rooms, or in applications where the ambient temperatures are consistently high. Figure 37 presents the MGT manufacturer's expected output de-rating for various ambient temperatures. A linear decrease in power is predicted when temperature is increased beyond 50°F (10°C). This rating is based on the original CHP system marketed by Turbec, which includes a recuperator that increases backpressure on the MGT exhaust. In the BBEST system, this recuperator is removed, and so turbine power is increased by approximately 5.5 kW, but a similar de-rating-per-degree is expected from the higher level and this has been observed in the field. As shown in Tables 9 and 11, peak COP_{th} in the subscale system was achieved with a 52-57°F (11.1-13.9°C) evaporator. Allowing for reasonable heat exchanger temperature pinch points and inlet air coil sizing, the target cooled air temperature has been set at 70°F (21.1°C), which corresponds to the MGT nominal output of 100 kW.

Figure 37: MGT Manufacturer's Published De-rate, as a Function of Ambient Air Temperature

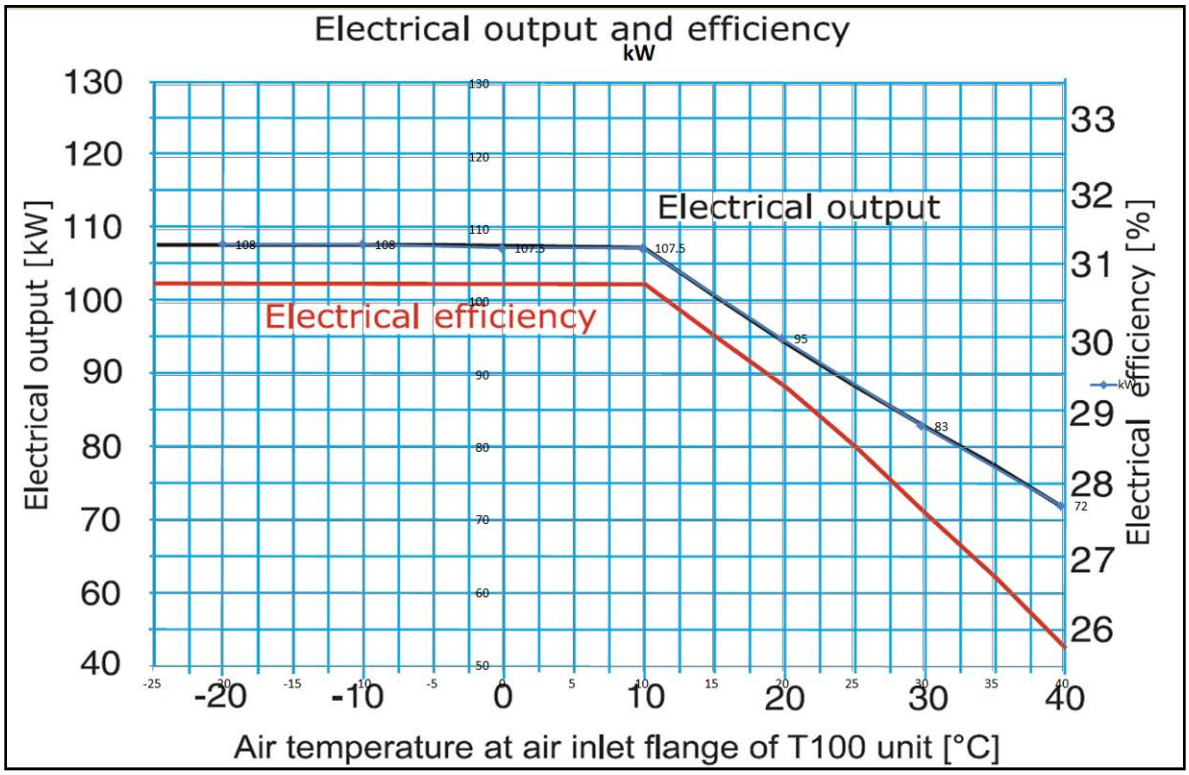

Table 17 shows the effect of ambient temperature on power output and the potential cost savings per day. For this analysis, the $0.07/kW LCOE has not been used, since the power increase/decrease does not affect all factors included in LCOE (e.g. regular maintenance.) Instead, only the incremental cost in natural gas for the added output has been considered, yielding a $0.095/kW-hr savings from the assumed grid price of $0.12/kW-hr. Also, "typical" boiler room temperature, and its seasonal variation must be assumed. In Table 17, it is assumed that the boiler room temperature is 80°F (26.7°C)for the equivalent of 60 days of the year (e.g. winter overnights), 96°F (35.6°C) for 120 days (e.g. summer) and 90°F (32.2°C) for the remainder. In this case, annual savings would be $5,572, resulting in a payback of 3.9 years. In a more extreme case, where boiler room temperatures averaged 96°F (35.6°C) all year, savings would be $7560/year, and payback would be realized in 2.9 years. Addition of an inlet air cooler would also allow installation and year-round operation of a CHP system in hotter regions of California. Turbec recommends a maximum operating temperature of 104°F (40°C), which is exceeded regularly in many areas of the state during summer. A 3.5 ton TRIEST could reduce 105°F (40.6°C) air to 79°F (26.1°C), and turn a non-running condition into one that generates over 95 kW of low-cost electricity.

Table 17: Potential Power Recovery with 3.5 ton TRIEST Inlet Air Cooler

Air Temp	Output	Potential Power Recovery	Cooling Req'd	Extra Generation	TRIEST Operating Cost	Net Savings	Operating Time	Savings
F	*kW*	*kW*	*tons*	*$$$/day*	*$$$/day*	*$$$/Day*	*Days/yr*	*$$$/year*
70	100	0	0.0					
77	96.5	3.5	0.9	$ 7.98	$ 5.48	$ 2.50		
80	95	5	1.4	$ 11.40	$ 5.98	$ 5.42	60	$325.15
90	90	10	2.7	$ 22.80	$ 7.65	$ 15.15	180	$2,727.85
96	87	13	3.5	$ 29.64	$ 8.64	$ 21.00	120	$2,519.53
							Total	**$5,572.53**

5.6 System Cost and Performance Conclusions

The subscale TRIEST tests demonstrated a lower specific steam consumption than assumed in initial modeling, and this chapter's analysis confirms the improvement in system thermal COP and its effect on system performance and payback time. Larger capacities (50 tons and higher) of TRIEST appear to have a limited economic future, and would be viable only in markets where electricity costs are high, or in facilities where steam is available as a waste product, with no additional natural gas (or other fuel) required.

A TRIEST of 8.0 tons capacity can provide a base load increase for CHP installations where steam demand is marginal. In installations that have 2.1 MMBtu/hr demand for 79% or less of the intended operating hours, the combined BBEST+TRIEST system payback would be less than the BBEST system alone. TRIEST also has a potential as an inlet air cooler. A 3.5 ton capacity system is capable of reducing MGT inlet air temperatures from 96 to 70°F (35.6 to 21.1°C) and increasing power output by 13 kW (15%).

These smaller-capacity TRIEST concepts have economic viability, though none achieve the two year payback that would result in immediate, widespread adoption in the commercial or industrial marketplace. Installation will be dependent on the heat loads, ambient temperatures, and available space at potential installation sites. If additional incentives, higher cost grid electricity (>$0.12), low/zero cost waste steam availability, or offsetting capital purchase conditions exist at those potential sites, the economic proposition will be even more attractive.

CHAPTER 6:
Production Readiness

6.1 Introduction

Since a refined version or field demonstration of TRIEST was not included in the awarded project scope, the production readiness evaluation presented here will be appropriate to a project that has shown feasibility in a laboratory setting, though at a substantial and commercially viable capacity. The discussion will evaluate individual components, noting which are ready for or already existing in volume production, and which require further development before production could be considered.

6.2 Ejectors

Altex purchased the steam ejectors from Croll-Reynolds, an industry leader in ejectors and vacuum systems. Performance of the units (as evaluated by specific steam consumption) exceeded the initial modelling assumptions, and they were trouble free and robust. These units were fabricated from stainless steel, which added a 15% premium to the price for a steel ejector. Croll-Reynolds built them specifically for the TRIEST project, and performance tested them prior to shipment to Altex. For volume production, steel ejectors would be used, and the bodies could be produced from two stampings, which would then be welded together, along with the inlet and outlet flanges. The ejector nozzles would still be machined, but economies of scale would be realized as multiples of the same nozzle could be manufactured using a conventional lathe. Estimated tooling charges for stamping dies and weld fixtures are $20,000, and the estimated per ejector cost is $750, in annual quantities of 50 or more.

6.3 Evaporator

The evaporator is a vacuum-capable stainless steel tank, with ejector mounting flanges located at the top. The inside of the vessel contains a demister, an extended-surface evaporation bed, a heat transfer coil with external fins, a water circulation pump, and a level sensor. Many of these components were fabricated especially for TRIEST, and would realize price reductions of 50% or more at low production volumes (100-500 parts/year). The extended surface media is manufactured in large quantities for column packing, and price discounts would apply for larger purchase quantities.

The evaporator diameter was governed by the allowable velocity through the demister. From a water capacity standpoint, the vessel is oversized, and could be down-scaled for both the 8 and 3.5 ton capacities. Further testing would be required to evaluate the impact of reducing the demister diameter, or perhaps eliminating it altogether. Since the subscale evaporator achieved 5.9 tons cooling, modifications to the design will be needed to increase or decrease its cooling capacity to meet the 3.5 and 8 ton targets. An increase in volume of the packing bed will increase evaporation, and can probably be implemented in the new design without an overall system volume penalty. The new design would also include connections for the LRV seal water, as described below in section 6.6. At this time, it is difficult to estimate the production cost of

the evaporator, since further development is needed, but the estimates in Table 13 seem reasonable, and perhaps conservative, depending on how much smaller the vessel can be made without compromising the evaporation performance.

6.4 Condenser

The TRIEST system used two condensers, located on the outlets of the steam ejectors. These heat exchangers condensed the combined water vapor of the evaporated water and the motive steam. One condenser was of a conventional tube and pierced fin design, and the other was designed and built by Altex using NISHEX technology, which reduces pressure drop for a given face velocity. This decreases the fan power required to drive heat transfer, creating a more efficient system. A detailed cost study of the condenser was performed to quantify the potential cost reductions and the manufacturing techniques necessary to create a production condenser. The prototype unit was constructed of soldered copper, which is consistent with many past Altex heat exchanger designs, as well as commercially-available radiators and condensers. For larger heat capacities and larger production volumes, a brazed assembly of aluminized steel is a more cost effective option. This approach is used by utility-scale condensers and many other applications.

To evaluate total condenser cost, manufacturers of fins and tubes and brazing contractors were contacted, and they provided cost and volume information. This information was then normalized to a square footage of condenser face area, at a given flow length. These calculations allowed scaling of the manufacturer data to a condenser of appropriate size for TRIEST. The $3725 estimated cost, shown in Table 18, is only slightly higher than the $3500 target shown in Table 13, indicating that if the projected costs are accurate, only minor refinements and savings will be needed to reach the $3500 goal, which was established by the conventional condenser used in TRIEST. As compared to the prototype AHEC condenser used in the subscale TRIEST (see Table 19), production cost will be 90% less, even at relatively low (100-500/yr) annual volumes.

To realize economies of scale, a multi-core brazing fixture would be required, so that several units could be brazed in one furnace cycle. Assembly and leak testing fixtures would be required, but for one condenser at a time. Assuming that the brazing vendor has existing furnaces and handling equipment appropriate to the physical size of the condensers, the total tooling investment for this subsystem is $100,000 or less.

Table 18: TRIEST Condenser Low-Volume Production Cost Estimate

	Material	Mfg. Method	Cost
Tubes	Aluminized Steel	Continuous formed from strip stock, w/ laser welded seam	$391
Fins	Aluminum	Roll-feed from spools into cog-type fin making machine	$1,342
Upper Manifold	Steel Pipe	Cut to length, milled & broached tube slots	$492
Lower Manifold	Steel Pipe	Cut to length, milled & broached tube slots	$450
Tube Sheets	Integral w/ manifolds	N/A	$
Flanges & misc	Steel	Various	$350
Assembly	N/A	Multi-core furnace brazing; Hand-brazed tube-manifold joints	$700
Assumptions: 25 sq ft face area, 3.0” flow length,100-500 annual production volume			**$3,725**

Table 19: TRIEST Condenser Prototype Costs

	Material	Mfg. Method	Cost
Tubes	Oxygen Free Copper Tubing	Roll-flattened, single article process	$4,111
Fins	Copper	Laser cut strips, hand fed into motorized bender	$16,710
Upper Manifold	Copper Alloy 110	Brake-formed from sheet	$492
Lower Manifold	Copper Alloy 110	Brake-formed from sheet	$450
Tube Sheets	Copper Alloy 110	CNC Machined	$4,150
Flanges & misc	Copper/Brass	Various	$2,978
Assembly	N/A	Single core furnace soldering; Hand soldering of manifolds	$5,802
Assumptions: 25 sq ft face area, 2.3” flow length, single unit			**$34,693**

6.5 Fans and Pumps

The tested TRIEST system used two condenser fans and three water pumps. The condenser fans were sourced from existing Altex inventory; this resulted in excess fan capacity, which was desirable from an experimentation standpoint. For a production TRIEST, properly sized, high efficiency fans would be used. A VFD or two-speed controller would be offered as an option, to increase efficiency in applications that anticipated highly variable loads or ambient temperatures. The two pumps used for condensate return were off-the-shelf pumps with low power draw; these performed reliably with 50 Torr absolute pressure on their inlets and are considered production-ready. The LRV HEX seal water pump was problematic during testing. Though identical to one of the condensate pumps, two pumps failed in the seal water application. The seal water pump inlet pressure is much lower (<10 Torr absolute), but the failure mode appeared to be excessive contact in the magnetic drive, which is not consistent with a low pressure-influenced problem. Regardless, this pump would need to be upgraded prior to production, and durability verified through an accelerated test. A more promising option is to use the evaporator tank as the cooler for the seal water, as described in section 6.6.

6.6 Liquid Ring Vacuum Pump

The LRV was purchased from Traviani, and was delivered as a complete "full recovery" skid. This included the pump, controls, outlet water/vapor separator, and a seal water heat exchanger. All of these components' functions are required for the production version of TRIEST, but can be better integrated. The LRV controls (contactor, power switch , etc.) would be part of the overall system controls, and the mounting features provided by the welded LRV skid would be part of the TRIEST frame.

The most significant change to the LRV operation and content would be to incorporate the seal water heat exchanger into the evaporator. Relocating the cooling function to the evaporator would eliminate one water pump and two vacuum-rated fittings. Instead of circulating cold water at vacuum from the evaporator to the LRV heat exchanger, the LRV would circulate the seal water through a coil in the evaporator, at an internal pressure slightly above atmospheric.

As a result of these modifications, the purchased parts from Traviani, or another LRV vendor, would be the pump and possibly the water/vapor separator, which are both already in-production and readily available.

6.7 Controls and Electronics

While a detailed electrical design, BOM, and panel layout of a full-scale system was beyond the scope of the design task, the major controls components are summarized here. As noted in section 6.5, a VFD option would also be available for appropriate applications.

Table 20: TRIEST Controls Simplified BOM & Cost Estimate

Component	Estimated Cost
LRV Contactor	$125
LRV Pressure Regulator	50
Mini PLC	175
Switches and indicator lights	25
Thermistors and pressure sensors	60
Switches and indicator lights	50
Terminal bars, connectors, relays	75
Enclosure	40
Total	***$600***

6.8 MGT Inlet HX (3.5 ton version only)

For the inlet air cooler application of the 3.5 ton TRIEST, an additional heat exchanger would be located in the inlet ducting of the CHP system, between the air filter and the engine air inlet. Since engine performance is influenced by the inlet air restriction, a low pressure drop HEX is critical, and the Altex NISHEX technology could be used here. A prototype aluminum NISHEX unit is shown in Figure 38, and could be scaled to match the physical and cooling needs of a gas turbine. The projected cost of this heat exchanger is higher, on a per-kilowatt basis, than the much larger condenser. Lower assembly and brazing costs are anticipated, and there are other potential commercial applications that could increase production volumes and decrease unit costs. The estimated tooling cost for brazing, welding, and leak test fixtures is $10,000. Forming of the manifolds and brackets can be performed with standard sheet metal cutting and forming tools, and will have minimal up-front costs or development time.

Figure 38: Altex Aluminum Heat Exchanger

Illustration Credit: Altex Technologies Corp.

6.9 Assembly and Test

The system structure would use an open-frame architecture, similar to that of the LRV skid. The frame would be designed to accommodate both system capacities, and would be welded and painted prior to delivery to Altex. Similarly, the controls box would be assembled by a sub-contractor with UL certification, and then delivered to Altex for connection to the various fans, pumps, and control system components. The estimated assembly labor at Altex is shown in Table 21. A dedicated assembly and test area would be required, at an estimated investment of $40,000, plus any needed facility steam system upgrades.

Table 21: Production Labor Goals

Task	Estimated Labor Hours
Receiving & Income Quality Inspection	4
Major Component Installation	16
Electrical Wiring, High Power	6
Electrical Wiring, Controls	6
Piping and Tubing	10
Electrical Check	2
Leak Check	2
Vacuum Function Check	2
Live Stream Testing	8
Shipping Prep and documentation	6
Total	62

6.10 Conclusions Regarding Overall Production Readiness

The "sub-scale" test unit functioned as a good validation of the major components that would be used in a production unit. Though more refinement of the evaporator is needed to reduce size and increase performance, the major purchased vacuum system components (ejectors and LRV) functioned well, and their transition to a production TRIEST can be easily imagined. The fans, pumps, and blowers are not specialized, and require little or no modification, only proper sizing, selection, and validation. The condenser manufacturing process will need to be improved and simplified to achieve the cost targets shown in Table 13. Another iteration of TRIEST build and test is required to validate the improved evaporator, seal water heat exchanger re-configuration, and the integrated control system. After successful test and field demonstration of this beta-level system, preferably at both cooling capacities, the tooling and facility investments would be justified, and the production phase of TRIEST could begin.

Even though TRIEST is a relatively unique system, it must compete in the marketplace against other cooling technologies. To understand both market demand and potential marketplace competition, a study of the competing technologies was included in Tasks 2 and 6 activities, and is included as Appendix A.

CHAPTER 7:
Project Conclusions

Results from the System Design and Engineering efforts support the need for TRIEST in facilities with low or intermittent thermal demand. A single-stage, steam-based system with 50-55°F (10 – 12.8°C) evaporator temperature offers the best balance of performance and capital cost, and produces a unit of comparable size to conventional HVAC and chiller units of the same capacity. TRIEST cooling capacity can be lower than initially proposed, and still provide the main benefit of continuous 100kWe MGT operation in a CHP system. The MGT inlet air cooler application is also a valid application of TRIEST, and can increase MGT power output by up to 13 kWe at ambient air temperatures of 96°F (35.6°C).

The TRIEST unit assembled and tested in the Altex Test Facility achieved the following:

- Stable operation at peak and half capacity
- Peak COP_{total} of 0.32 and peak COP_{elec} of 5.30
- 5.9 cooling tons peak output
- Process water flows of 12.8-23.8 gpm, and differential temperatures of 3.5 - 7.6°F (1.9-4.2°C)
- Process water temperatures of 60°F (15.6°C)or less under both full and part-load conditions
- Batch cooling capacity below 39°F (3.9°C)

A TRIEST of 8.0 tons capacity can provide a base load increase for CHP installations where steam demand is marginal. In installations that have 2.1 MMBtu/hr demand for 79% or less of the intended operating hours, the combined BBEST+TRIEST system payback would be less than the BBEST system alone.

The 8.0 and 3.5 ton capacity TRIEST concepts have economic viability, though neither, when installed on a 10 MMBtu/hr boiler under the economic assumptions used in this report, achieve the two year payback that would result in immediate, widespread adoption in the commercial or industrial marketplace. Installation will be dependent on the heat loads, ambient temperatures, and available space at potential installation sites. If additional incentives, higher cost grid electricity (>$0.12), low/zero cost waste steam availability, or offsetting capital purchase conditions exist at those potential sites, the economic proposition will be even more attractive. Larger capacities (50 tons and higher) of TRIEST appear to have a limited economic future, and would be viable only in markets where electricity costs are high, or in facilities where steam is available as a waste product, with no additional natural gas (or other fuel) required.

The tested unit was a good validation of the major components that would be used in a production unit. Though more refinement of the evaporator is needed to reduce size and

increase performance, the major purchased vacuum system components (ejectors and LRV) functioned well, and their transition to a production TRIEST can be easily imagined. Another iteration of TRIEST build and test would be required to validate the improved evaporator, seal water HEX re-configuration, and an integrated control system. After successful test and field demonstration of this beta-level system, preferably at both cooling capacities, the tooling and facility investments would be justified, and the production phase of TRIEST could begin.

The Agreement Objectives included goals for TRIEST performance, as well as the TRIEST + BBEST performance as a Combined Cooling, Heating, and Power system. As documented in the BBEST Final Report (PIR-09-012), BBEST showed the potential to meet the following common goals:

- Lower overall firetube boiler emissions to levels below 9 ppm @3% O2, to meet emissions regulations in all California regions
- Allow boiler operation at low excess air, (2-3% excess O2) under both full and part load conditions, to minimize sensible (dry gas) heat losses in the stack and reduce fuel costs
- Achieve overall CHP efficiencies of 82%, by improving boiler-burner operation especially at part loads
- Improve MTG reliability and reduce cost by eliminating recuperator and using a low temperature and low NOx combustor

As described in this report, TRIEST, particularly in its application as an MGT charge air cooler, will reduce the incremental cost of power generation. The BBEST Final Report also documented the various payback potentials in a more-detailed analysis than presented in this report, which focused on a single boiler capacity. BBEST payback times of 2 years or less were shown to be possible in most markets and applications, with all incentives considered. Payback times are also greatly decreased for new and regulation-driven retrofit applications, where the avoidance of buying a more-conventional burner is considered. Thus, TRIEST+BBEST also satisfies the objective:

- Reduce incremental cost of power generation and provide a payback of 1.5-2.0 years for most 100kWe installations

Finally, the as-tested TRIEST system achieved COP_{total} of 0.32 and peak COP_{elec} of 5.30. For installations with very low cost or waste steam, the COP_{elec} will be the most relevant metric, and is approximately double that of a conventional MVC-based chiller or air conditioning unit. The achieved COP_{total} is better than initially modeled, and is substantially better than other low-temperature steam jet chillers, but lower than the COP =>0.6 objective. Therefore, the TRIEST system can be said to either over-perform or under-perform relative to the final objective:

- Prove a low cost heat driven cooling system that has a COP of at least 0.6

GLOSSARY

Term	Definition
AC	Air Conditioning
AHRI	Air-Conditioning, Heating, and Refrigeration Institute
ANSI	American National Standards Institute
ASHRAE	American Society of Heating, Refrigerating and Air Conditioning Engineers
BBEST	Boiler Burner Energy System Technology
CAD	Computer Aided Design
CHEMCAD	Trade name of a chemical modelling software
CHP	Combined Heat and Power
CFC	Chlorofluorocarbon (refrigerant)
COP	Coefficient of Performance
COP_{elec}	Coefficient of Performance, electrical
COP_{th}	Coefficient of Performance, thermal
COP_{tot}	Coefficient of Performance, total
COP_{r}	Coefficient of Performance, refrigeration (applied to absorption chillers only)
COTS	Commercial Off the Shelf
EER	Energy Efficiency Ratio
HEX	Heat Exchanger
HFC	Hydroflourocarbon (refrigerant)
HVA	Heat-driven Vapor Absorption (as used in absorption chillers)
HVAC	Heating Ventilation and Air Conditioning
IPLV	Integrated Part Load Value
LCOE	Loaded Cost of Electricity
LRV	Liquid Ring Vacuum pump
MGT	Micro Gas Turbine

MMBtu/hr	Millions of British Thermal Units per Hour
MVC	Mechanical Vapor Compression (as used in conventional chillers)
NISHEX	Non-Isotropic Heat Exchanger
NOx	Oxides of Nitrogen
ORC	Organic Rankine Cycle
SCG	Southern California Gas Company
SJR	Steam Jet Refrigeration

REFERENCES

Lennox. (n.d.). *Lennox Commercial Chillers.* Retrieved October 25, 2012, from www.lennox.com

Naguib, R. (2011). The Changing Landscape of Chillers' Energy Efficiency. *Energy Engineering Vol. 108, No.4*, pp. 25-45.

Thermax/Trane. (2012). *Trane Chillers.* Retrieved October 25, 2012, from www.trane.com

Trane. (n.d.). *Ohio State Procurement.* Retrieved October 30, 2012, from http://procure.ohio.gov/pricelist/800195revpricelist.pdf

Yazaki. (n.d.). *Yazaki Steam Absorption Chillers.* Retrieved Oct 25, 2012, from www.yazakienergy.com

Zogg, R.A. (2005). *Guide to Developing Air-Cooled LiBr Absorption for CHP Applications.* U.S. DOE.

APPENDIX A:
HVAC and Chiller Benchmarking

Summary

Chillers are commercially available in two main categories: Mechanical Vapor Compression (MVC), and Heat-driven Vapor Absorption (HVA). Both can be directly cooled with water or air, although most water cooled chillers use remote cooling towers with air as the cooling media. MVC systems have recently increased efficiencies through various means, including the addition of variable frequency drives. The reliability reputation of MVC's has also improved. These factors have led to a steady loss of market share by absorption systems in the water cooled market as well.

System Descriptions

MVC systems address commercial markets such as office buildings, retail/grocery, and warehouses, as well as the residential market. Absorption chillers are utilized in buildings that have established central cooling plants and a source of heat (e.g. steam or hot water boiler), although MVC systems can still be preferred over absorption systems for their lower initial capital costs. With the addition of variable frequency drives and ease of compressor repair, air cooled MVC's can be quite competitive across the entire market (Naguib, 2011). It can also be difficult for consumers to calculate the cost of the heat that the absorption chillers utilize; it can also be difficult to directly compare efficiencies.

The following outlines the fundamental differences between MVC and Absorption systems:

- MVC System
  - Main Components: Compressor, evaporator, condenser, expansion device
  - Primary Classification – Positive Displacement Compressor Type
    - Reciprocating or Scroll –Typically sized up to 200 Tons
    - Rotary Screw—Typically sized 50-500 Tons
    - Centrifugal–Typically sized from 100-5000 Tons
  - Secondary Classification —Condensing Method
    - Water cooled –Typically sized 25-3000 Tons and requires a cooling tower
    - Air cooled –Typically sized up to 500 Tons, incorporates condensing loop into a packaged unit.
  - Regulated to a standard Energy Efficiency Ratio (EER) where:
    - EER = Ec/Pa (BTU/W-h)

      Ec = net Cooling Capacity (Btu/h)
      Pa = applied electrical power (Watts)
    - kW/Ton = 12/EER, COP = EER/3.412
- Absorption Chillers
  - Classified by Primary Generator Firing Method

        - Direct fired (burner built in, heat can be extracted for process)
        - Indirect fired (steam or hot water from utility/facility drives generator)
    - Secondary Classification —Number of Generators
        - Single effect (one generator)
            - Typical COPr 0.6-0.8[2]
            - Indirect fired by 15 psig steam, or 270°F (132.2°C) hot water (typical)
        - Multi-effect (multiple generators)
            - Typical COP 0.9 to 1.2
            - Indirect fired by 115 psig steam, or 370°F (187.8°C)hot liquids (typical)
    - Tertiary Classification – Condensing Method
        - Water cooled (lithium bromide—water absorption, 20-1500 ton)
        - Air Cooled (size limited to ammonia—water absorption, 3-5 tons)
    - Regulated to a standard COP where:
        - COPr = Eo / Ei
          Eo = Net Cooling Capacity (BTU/h)
          Ei = Generator(boiler) Energy applied (BTU/h)
        - kW/Ton = COP/3.412, EER= COPx3.412

Most manufacturers' products are capable of turning down to meet load demand, usually in the range of 4:1. Regulating agencies have designed a part load efficiency test called the Integrated Part Load Value (IPLV), which manufacturers use to rate their systems. Various studies indicate a chiller is at 100% capacity for 1% of the time, 75% capacity for 42% of the time, 50% capacity for 45% of the time, and 25% capacity for 12% of the time, resulting in the following weighted average equation. The test procedure is outlined in ARHI Standards.

$$IPLV = 1 / (0.01 / A + 0.42 / B + 0.45 / C + 0.12 / D)$$

Where;

- A = performance at 100%
- B = performance at 75%
- C = performance at 50%
- D = performance at 25%

[2] COPr of an absorption system is the dimensionless ratio of evaporator cooling capacity divided by heat energy required by generator (excludes electrical energy needed to operate pumps, purge, controls and supplementary cooling)

Survey of the Market

A survey of a few commercially available base systems was conducted and the physical data of interest was compiled in

Table A1. The MVC systems reviewed were stand-alone, packaged, air-cooled systems and the steam absorption systems are water cooled which require matched cooling towers and pumps, not included in their specifications.

Table A-1: HVAC/Chiller Normalized Specifications

Type	Size Range (Tons)	Cooling Density – System Floor Space (ft^2/Ton)	Cooling Density – System Volume (ft^3/Ton)	Cooling Density – System Mass (lb/Ton)	Full Load COPr
MVC Scroll Air Cooled	3-25	3.8-14	21-50	130-340	2.9-3.6
MVC Scroll, Air Cooled	20-130	0.5-2	6.5-14	80-155	3.4-3.7
MVC Screw, Air Cooled	140-500	0.6-0.9	5.2-7.5	64-98	3.5-3.7
Steam Absorption, Water Cooled	30-1900	0.2-0.7	2.9-5	61-134	0.8-1.0

Cost

A survey of reports on the chiller market, a current price list from one manufacturer, and a verbal price quote from a local sales representative were used to gather approximate costs for commercially available chillers. The results are summarized in Table A2. The prices shown are a unit price not including tax, shipping, or installation costs. The obvious TRIEST cost comparison, based on capacity, is the MVC scroll, at $480-$850 per ton. Comparing this to the estimated price of the 8 ton TRIEST of $3336/ton (neither cost including installation), TRIEST will certainly have a higher capital cost. However, as discussed in the Task 3 report, the subscale system achieved electrical COP's as high as 5.3, substantially higher than the MVC, as shown in Table A1. If the steam is available at low or no cost, the higher initial cost of TRIEST can be paid back through increased electrical generation and cooling that requires half of the electrical power as the comparable MVC.

Table A-2: Approximate Costs of Chiller Systems

	3-100 Ton	100-350 Ton
Type	**$/Ton (USD)**	**$/Ton (USD)**
MVC Scroll	$480-$850	$429-$480
MVC Screw	-	$365-$450
MVC Centrifugal	-	$500 +
Single Effect Absorption	-	$500-$700
Double Effect Absorption	-	$740
Cooling Towers	-	$135-$256

Scaling

During the review of manufacturer's data sheets, a few construction trends were observed. Where manufacturers would offer a range of chiller sizes under one model, two - four capacities would be designed around one frame size, resulting in a variance in the densities. The scaling of MVC systems would be accomplished by alternatively increasing the number—or increasing the size of—compressors, condensers, and cooling fans.

State of the Art Systems

Some manufacturers purport to have air cooled MVC systems that can achieve full load ratings greater than an EER of 20/ IPLV EER of 30, but due to lack of a complete data, this could not be completely verified. Most systems of this nature include a type of heat recovery or useful heat output that is included—but not clearly stated—in their calculations. Some will also involve hybrid cooling techniques, involving multiple heat exchanger types (e.g. evaporative cooling + an air cooled heat exchanger).

De-rating

As noted in the ranges of each system reported, not every technology covers the entire range. The unit dimensions found in product cut sheets show that manufacturers sometimes de-rate a product to create a new model with lower capacity. The smaller unit would have increased performance at its newly rated maximum capacity, but has a decreased cooling density (i.e. the device has the same physical size as its predecessor, but produces less cooling). Additionally, the peak load ratings described earlier are performed using an ANSI/AHRI standard of testing depending on the type of system. These tests are conducted at fixed condenser return and chilled water outlet temperatures depending on the heat rejection method, typically 85°F (29.4°C) and 44°F (6.7°C), respectively. This leads to a de-rating of the nominal output when the ambient temperature is, for example, 120°F. Some manufactures will publish their data at various condenser and chilled water temperatures. Typical MVC systems will claim approximately 85% de-rating of nominal cooling capacity with ambient air at 120°F (48.9° C) (Zogg, R.A., 2005).