Energy Research and Development Division
FINAL PROJECT REPORT

UNDERGROUND CABLE DIAGNOSTICS MINIATURIZATION RESEARCH, DEVELOPMENT, FIELD TEST, AND COMMERCIALIZATION

Prepared for: California Energy Commission
Prepared by: The Regents of the University of California
University of California, Berkeley

MARCH 2015
CEC-500-2015-027

PREPARED BY:

Primary Author(s):
Richard White
Jim Evans
Paul Wright
Richard Xu
Chris Sherman
Christine Gregg
Skot Croshere
Eric Talamantez
Sean Wihera
Lloyd Cibulka

The Regents of the University of California
University of California, Berkeley
Berkeley, CA 94720
Phone: 510-643-1440 | Fax: 510-643-9324
http://ame.berkeley.edu

Contract Number: 500-11-021

Prepared for:

California Energy Commission

David Chambers
Contract Manager

Fernando Pina
Office Manager
Energy Systems Research Office

Laurie ten Hope
Deputy Director
ENERGY RESEARCH AND DEVELOPMENT DIVISION

Robert P. Oglesby
Executive Director

DISCLAIMER

This report was prepared as the result of work sponsored by the California Energy Commission. It does not necessarily represent the views of the Energy Commission, its employees or the State of California. The Energy Commission, the State of California, its employees, contractors and subcontractors make no warranty, express or implied, and assume no legal liability for the information in this report; nor does any party represent that the uses of this information will not infringe upon privately owned rights. This report has not been approved or disapproved by the California Energy Commission nor has the California Energy Commission passed upon the accuracy or adequacy of the information in this report.

ACKNOWLEDGEMENTS

The UC Berkeley research team would like to acknowledge the continued assistance of the Technical Advisory Committee to this project. Further, the research team would like to acknowledge the extensive efforts undertaken by various personnel from both UC Berkeley campus and the Lawrence Berkeley National Laboratory in their continued attempts to find a suitable field-testing site. Finally, the research team is pleased to acknowledge the collaborative relationships it has shared with and the funding provided by the California Energy Commission throughout the duration of this project.

PREFACE

The California Energy Commission Energy Research and Development Division supports public interest energy research and development that will help improve the quality of life in California by bringing environmentally safe, affordable, and reliable energy services and products to the marketplace.

The Energy Research and Development Division conducts public interest research, development, and demonstration (RD&D) projects to benefit California.

The Energy Research and Development Division strives to conduct the most promising public interest energy research by partnering with RD&D entities, including individuals, businesses, utilities, and public or private research institutions.

Energy Research and Development Division funding efforts are focused on the following RD&D program areas:

- Buildings End-Use Energy Efficiency
- Energy Innovations Small Grants
- Energy-Related Environmental Research
- Energy Systems Integration
- Environmentally Preferred Advanced Generation
- Industrial/Agricultural/Water End-Use Energy Efficiency
- Renewable Energy Technologies
- Transportation

Underground Cable Diagnostics Miniaturization Research, Development, Field Test, and Commercialization is the final report for the Underground Cable Diagnostics Miniaturization Research, Development, Field Test, and Commercialization project (contract number 500-11-021) conducted by The Regents of the University of California. The information from this project contributes to Energy Research and Development Division's Energy Systems Integration Program.

For more information about the Energy Research and Development Division, please visit the Energy Commission's website at www.energy.ca.gov/research/ or contact the Energy Commission at 916-327-1551.

ABSTRACT

The failure of underground cables due to aging and environmental conditions is an expensive and dangerous maintenance challenge for utilities. There are two primary scenarios of failure in underground cables: failure of concentric neutrals in the cable and the development of "water trees" or failures in the cable insulation, which allow the cable to improperly ground.

Current diagnostic methods to preempt these failure scenarios require taking the cable "off line", which results in costly, and often unnecessary service outages. Consequently, the University of California, Berkeley research team began exploring diagnostic techniques, which could safely and economically assess the integrity of energized underground cables.

The research team developed a mechanical "grabber" device that can safely identify the degradation of concentric neutrals in an energized cable via variations in the cable's magnetic fields. To address cable insulation flashover, the research team has explored a radio frequency "coupling" technique for identifying the presence of "water trees" throughout the length of the cable. This report also details activities to commercialize these technologies.

Keywords: underground cables, water trees, concentric neutrals, sensors, RF coupling

Please use the following citation for this report:

White, Richard; Evans, James; Wright, Paul, et al. (University of California at Berkeley.) 2015. ***Underground Cable Diagnostics Miniaturization Research, Development, Field Test, and Commercialization***. California Energy Commission. Publication number: CEC-500-2015-027.

TABLE OF CONTENTS

Acknowledgements ..... **i**

PREFACE ..... **ii**

ABSTRACT ..... **iii**

TABLE OF CONTENTS ..... **iv**

LIST OF FIGURES ..... **v**

EXECUTIVE SUMMARY **1**

Introduction 1

Project Purpose 1

Project Results 1

Project Benefits 2

CHAPTER 1: Introduction **3**

1.1 Background and Project Overview 3

1.2 Project Goals and Objectives 3

1.3 Project Technical and Commercialization Approaches 4

CHAPTER 2: Diagnostic Method for Assessment of Concentric Neutrals **5**

2.1 Introduction 5

2.2 Goals and Objectives 5

2.3 Technical Approach and Design Strategy Using Mems Sensors 5

2.4 Laboratory Testing and Development 11

2.5 Field Testing 16

2.6 Conclusions 16

CHAPTER 3: Online Mems Underground Cable Diagnostic Sensors **18**

3.1 Introduction 18

3.2 Goals and Objectives 19

3.3 Technical Approach of The Rf Coupling Technique 19

3.4 Laboratory Testing and Development 20

3.5 Field Testing 21

3.6 Conclusions 21

CHAPTER 4: Pre-Commercialization of Method for Assessment of Concentric Neutrals 23

4.1 Introduction 23

4.2 Preliminary Pre-Commercialization Investigations 23

4.3 Commercialization Plan 23

CHAPTER 5: Conclusions and Recommendations 24

5.1 Concentric Neutral Diagnostic Method 24

5.2 Water Tree Diagnostic Method 24

5.3 Recommendations for Further Research 25

GLOSSARY 28

REFERENCES 29

APPENDIX A: UC Berkeley Patent and Disclosure Information Relevant to Future Commercialization A-1

APPENDIX B: 60 Hz AC Current Sensor Design B-1

LIST OF FIGURES

Figure 1: Cross-section of a Typical Underground Distribution Cable 6
Figure 2: Giant Magneto-resistive (GMR) Sensor 6
Figure 3: Computed Magnetic Fields around a Cable in Which All CNs Are Carrying the Expected Current 7
Figure 4: Computed Magnetic Fields around a Cable in Which One CN Is Carrying No Current 8
Figure 5: The "Cable Grabber" 8
Figure 6: Data Output of Grabber GMR Sensors for One AC Cycle 9
Figure 7: Amplitudes of Measured Sensor Data on a Cable with Healthy CNs 10
Figure 8: FFT of Measured Sensor Data Showing the Difference between a Cable with All Healthy CNs (blue) and a Cable with a Damaged CN (red) 10
Figure 9: Okonite 5 25kV 1/0 Cable #160-23-9722 11
Figure 10: Concentric Neutral Lab Test Setup 12
Figure 11: Test Jig for a GMR Sensor in an SOIC Package 13
Figure 12: GMR Sensors in Various Mounting Configurations 13
Figure 13: Clamp Prototype for Concentric Neutral Testing 14
Figure 14: Top View of Clamp Prototype 15
Figure 15: Grabber Prototypes 16
Figure 16: Development of Water Trees in Underground Cable Insulation 18

Figure 17: RF Penetration Concept Diagram and 3D Model of Underground Cable "Elbow" 20
Figure 18: A Communicating Sensor-node Powered by AC Electromechanical Energy Harvesting 26
Figure 19: Self-powered Vibration Sensor for Condition Based Monitoring (CBM) 26
Figure 1: Proximity-Based AC Current Sensor 1

EXECUTIVE SUMMARY

Introduction

The aging of underground electricity distribution cables is an immediate issue facing utilities in California, with more than 100,000 miles of these cables installed on the west coast. The old underground cables have a higher probability of failure from defects because of aging and operating in harsh environments that include the presence of water, salts and other contaminants. These defects can cause catastrophic cable failures that are hazardous to the local community and can result in large economic costs to affected businesses that lose power. Currently utilities use a simple age-of-operation schedule to determine which cables to replace. This scheduled replacement method is not optimal and requires a condition-based inspection method that functions with the cable energized. The scheduled replacement method also does not solve the failure problem with new cables or replacement cables installed in the future.

Project Purpose

This project addressed two primary causes of failure in underground cables: broken or corroded concentric neutral wires and failure of the polyethylene insulation from microscopic water filled tubes known as "water trees." Underground cables are often manufactured with "concentric neutrals." These are copper wires that spiral down the length of the cable outside the insulation layer and provide a return path for fault currents.

The University of California, Berkeley research team developed two scenario-specific solutions that enable grid operators to assess the health of energized cables and preempt catastrophic cable failures.

Project Results

The research team developed specific solutions for each of the two cable failure scenarios.

Assessing Concentric Neutrals

The research team fabricated a "grabber" device, which utility technicians simply push onto the energized cable using an industry-standard "hot stick" allowing them to keep a safe distance from the energized cable when taking measurements. Sensor data from the grabber is transmitted wirelessly via Bluetooth to the technician's laptop, tablet or smart phone. The grabber easily releases the cable by simply pulling it off. The technician can then review the sensor data, quickly assess the cable's health, and determine if a cable replacement or further testing is necessary. The grabber is also being designed so it could be left attached to the cable indefinitely as a condition-based monitoring solution.

Online Cable Diagnostics using Radio Frequency Coupling:

The research team developed a technique to assess the health of an entire energized cable using radio frequency (RF) coupling. The technique requires inserting a RF generation source at one end of the cable and a detector to detect reflections. By comparing the cable's attenuation (reduction of signal strength) and other characteristics classified as a "healthy cable," technicians can quickly identify the presence of water trees or other cable abnormalities. By

assessing the health of a cable, utilities can replace cables before they fail as well as avoid unnecessary cable replacements.

Project Benefits

The research team has successfully explored two safe, economic methods for assessing the health of energized underground cables. First, the team developed (and patented) a "grabber" device which can identify failed concentric neutrals within underground cables. The grabber detects irregularities in the individual magnetic field of each concentric neutral. Second, they refined and patented a method to identify the presence of "water trees" within underground cable jackets using a radio frequency coupling technique.

There are numerous public benefits for utilities able to identify and replace underground cables before they fail.

- Utility personnel have advance warning that a cable may fail and cause an outage. They can schedule the cable for immediate replacement, reducing the probability that a failure will cause customer outages.
- Customers will experience more reliable service, and will suffer less inconvenience and the economic costs that accompany outages.
- Utilities will avoid excess costs due to emergency replacements and repairs, and will be able to better control their available maintenance dollars.
- The safety of utility maintenance personnel and customers will be improved.

CHAPTER 1: Introduction

1.1 Background and Project Overview

The aging of installed underground distribution cables is a looming issue facing electric utilities in California and throughout the U.S. There are over 100,000 miles of underground power distribution cables in and around the United States west coast. The old cables have a higher probability of failure due to development of defects in the cables because of aging. These defects lead to catastrophic cable failures that are not only hazardous to the community around the location of the failure, but are also large economic costs to affected businesses that lost power from the time of the cable failure to restoration of power. Presently utilities use a simple age-of-operation schedule to determine which cables to replace. This scheduled replacement method is not optimal and can result in both cables failing prior to service, as well as the unnecessary replacement of healthy cables. A condition-based monitoring solution that can assess the health of energized cables (avoiding unnecessary service outages) is that optimal solution.

To illuminate the scale of this challenge, currently, the Pacific Gas & Electric Co. (PG&E) network contains over 57,500 miles of primary distribution cable. In urban areas, 70% of the distribution network is underground. These cables carry voltages between 12 KV and 35 KV and age at different rates depending on numerous environmental variables. Unfortunately, underground cables are most often not replaced until they fail. Failed cables can result in blackouts (service outages) and brownouts (low voltage conditions), which have cascading economic costs and safety ramifications.

1.2 Project Goals and Objectives

The first goal of this project was to address the two primary causes of cable failure: failure of concentric neutrals and insulator flashover. Secondly, the team would pursue the commercialization of the developed solutions.

In addressing the first goal of this project, the research team would install previously developed sensor prototypes both in the field and in the lab and run extended testing. The team would collect long-term data from the sensors and develop techniques to assess cable integrity and devise means to improve reliability of the sensors throughout this process. Further, the research team would miniaturize diagnostic sensors using micro- and nano-fabrication techniques and develop energy harvesting technologies for self-powering the sensors.

Secondly, the research team hypothesized it was viable to use radio-frequency probing signals injected into an energized water-treed power distribution cable to determine the presence of water trees. Since water trees cause changes in both the permittivity and the conductivity of cable insulation, they could cause possibly measurable changes in either (or both) the velocity and attenuation of an RF probing signal.

Finally, the research team would work with stakeholders, such as the California's IOU's, packaging/MEMS companies, and electronic test and measurement equipment manufacturers, such as Agilent Technologies to foster discussions pertaining to the commercialization of the developed sensors. The research team would continually conduct design-for-manufacturing analysis to engineer and harden the sensor for widespread use in natural gas pipeline applications.

1.3 Project Technical and Commercialization Approaches

As previously mentioned in Section 1.2, cable failure is typically the result of either of two scenarios:

1) Failure of Concentric Neutrals (CNs) – The loss or failure of protective concentric neutrals can also allow the cable to improperly ground.
2) Insulator Flashover – The development of "water trees" or failures in the cable insulation, which allow the cable to improperly ground.

Utility technicians need to know specifically which cables to replace. However, current diagnostic methods require cables to be taken offline (de-energized), which results in costly and unnecessary service outages.

The research team's goal was to enable utility technicians to safely, easily and economically determine which *energized* underground cables require replacement. This would enable utilities to preempt cable failures while avoiding unnecessary scheduled cable replacements and diagnostic-related outages of the existing assessment methods.

To address the first failure scenario (failure of the concentric neutrals) the research team determined magnetic field sensors could be implemented to assess the health of cables concentric neutrals.

To address the second failure scenario (insulator flashover) the research team hypothesized it was viable to use radio-frequency probing signals coupled in an energized water-treed power distribution cable to determine the presence of water trees. Since water trees cause changes in both the permittivity and the conductivity of cable insulation, one could detect possibly measurable changes in either (or both) the velocity and attenuation of an RF probing signal.

The research team's commercialization strategy has involved the patenting and subsequent licensing of the developed device for detecting failed concentric neutrals as well as the RF coupling technique. For further details on these patents and disclosures, please refer to *A: UC Berkeley Patents and Disclosures.*

CHAPTER 2:
Diagnostic Method for Assessment of Concentric Neutrals

2.1 Introduction

Underground cables are often manufactured with "concentric neutrals." These are copper wires that spiral down the length of the cable outside the insulation layer and provide a current return path for fault currents, and for residual currents when the three phases are not in balance.

Unfortunately, underground cables often operate in harsh environments that include the presence of water, salts and other contaminants. Through continued permeation of the cable jacket, these environmental hazards can eventually result in the corrosion and failure of the copper concentric neutrals. While there are redundant, concentric neutrals on each cable, failed concentric neutrals can eventually result in a cable failure or expensive service outages.

2.2 Goals and Objectives

The goal of the investigation on concentric neutrals (CNs) was to develop a method that would enable the health of CNs to be determined without taking the underground cable off-line, which potentially results in interruption of power to customers.

Objectives specific to this work were:

- Testing of the concept that the ability of a CN to carry current can be determined by measuring the magnetic fields around the cable
- Development of a means for measuring such magnetic fields
- Testing the means of measurement, both in the laboratory and the field.

Figure 1 shows an underground cable with components identified. The CN wires provide a return path for currents caused by imbalances in the three phases. They also provide a degree of safety against accidental mechanical damage due to excavation of the cable, which typically will have its central conductor at several thousand volts with respect to ground.

2.3 Technical Approach and Design Strategy Using Mems Sensors

An inexpensive way of measuring magnetic field is using a GMR (giant magneto-resistive) sensor such as illustrated in Figure 2.

Figure 1: Cross-section of a Typical Underground Distribution Cable

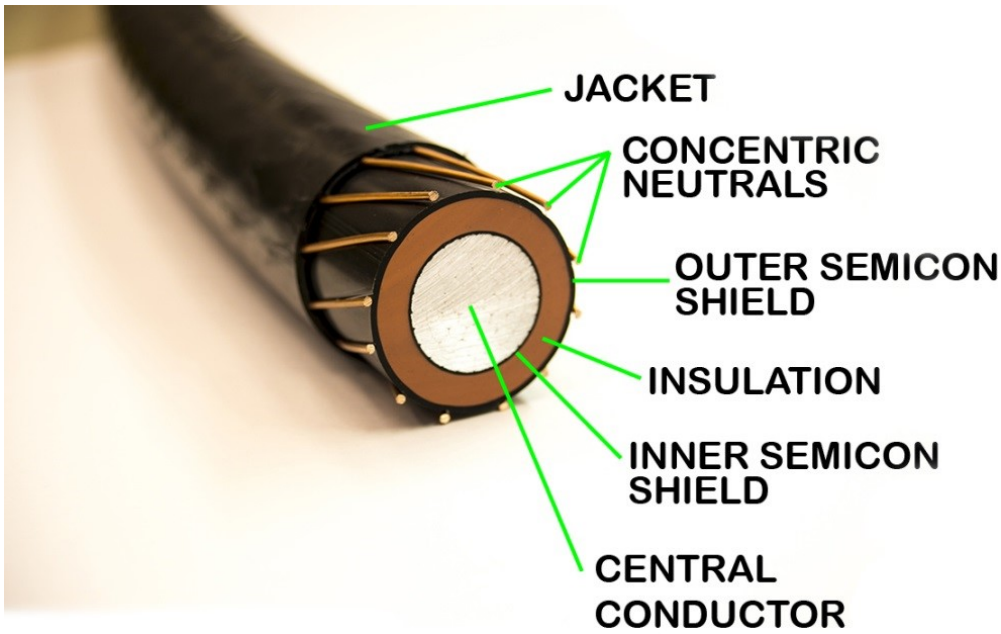

Part of the insulation jacket has been removed to reveal the concentric neutral wires.
Photo Credit: UC Berkeley

Figure 2: Giant Magneto-resistive (GMR) Sensor

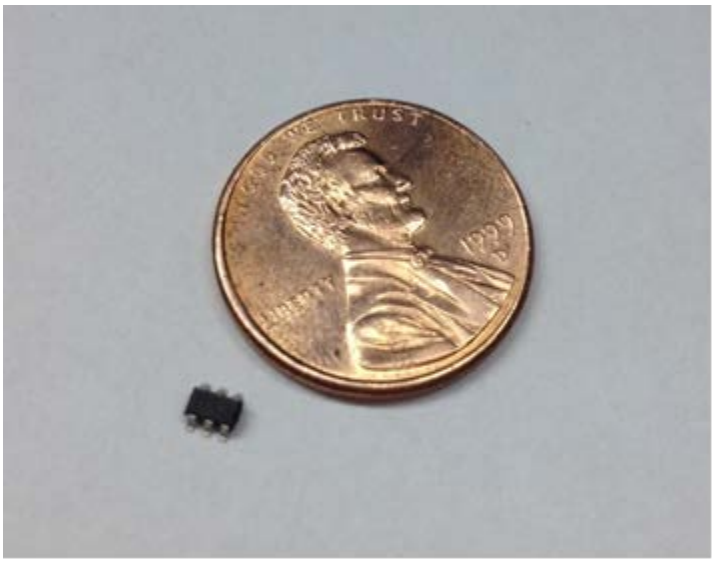

GMR Sensor with a penny for size comparison.
Photo Credit: UC Berkeley

The selected GMR sensors are very inexpensive (<$1.00 USD) and can readily be integrated into a circuit that will acquire magnetic field data and relay them wirelessly to a nearby receiving computer. Such a circuit can be attached to a "hot stick" for safely positioning the device on the underground cable without taking the cable off-line.

The magnetic field just outside a working underground distribution cable is made up of parts due to the current in the central conductor and to the currents in each of the CNs. Figure 3 shows the computed magnetic field for the case where all concentric neutrals (ten in this case) are "healthy", i.e. carry the expected current. Three components of magnetic field (radial, axial and circumferential) are created by the currents and all three are plotted as a function of position around the cable. Contrast the results of Figure 3 with those of Figure 4, where one of the CNs (the seventh one in these figures) is carrying no current, as would be the case if the CN were broken or had corroded away.

Figure 3: Computed Magnetic Fields around a Cable in Which All CNs Are Carrying the Expected Current

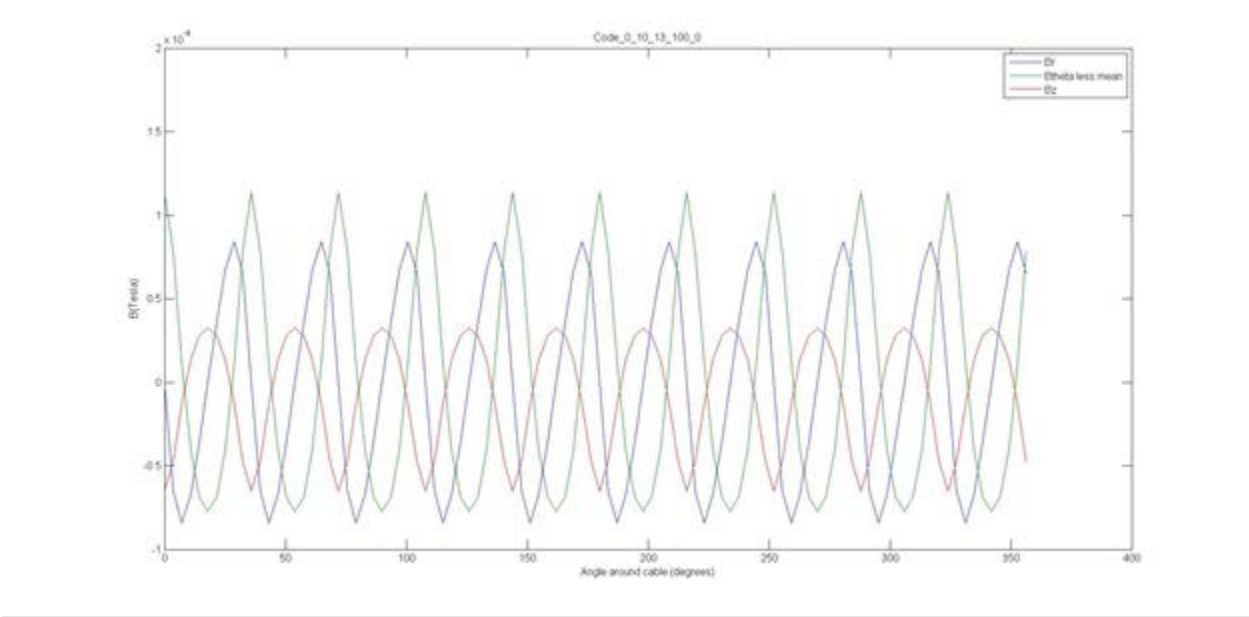

Photo Credit: UC Berkeley

The differences between the fields that are evident in these two Figures can be further revealed by data mining techniques such as the Fast Fourier Transform (FFT).

The computed results of the above two Figures have been calculated and plotted for one hundred points around the cable. A "scanning" approach was considered early in this investigation: one or more sensors would be rotated around the cable to measure the magnetic field at many positions such as the one hundred of the computed results. However, it was thought that a more practical approach would be to place a number of sensors (e.g., 12) in fixed positions around the cable and to gather data from all sensors simultaneously. Figure 5 shows

how this can be achieved using a "cable grabber," the design of which has emerged from this investigation.

Figure 4: Computed Magnetic Fields around a Cable in Which One CN Is Carrying No Current

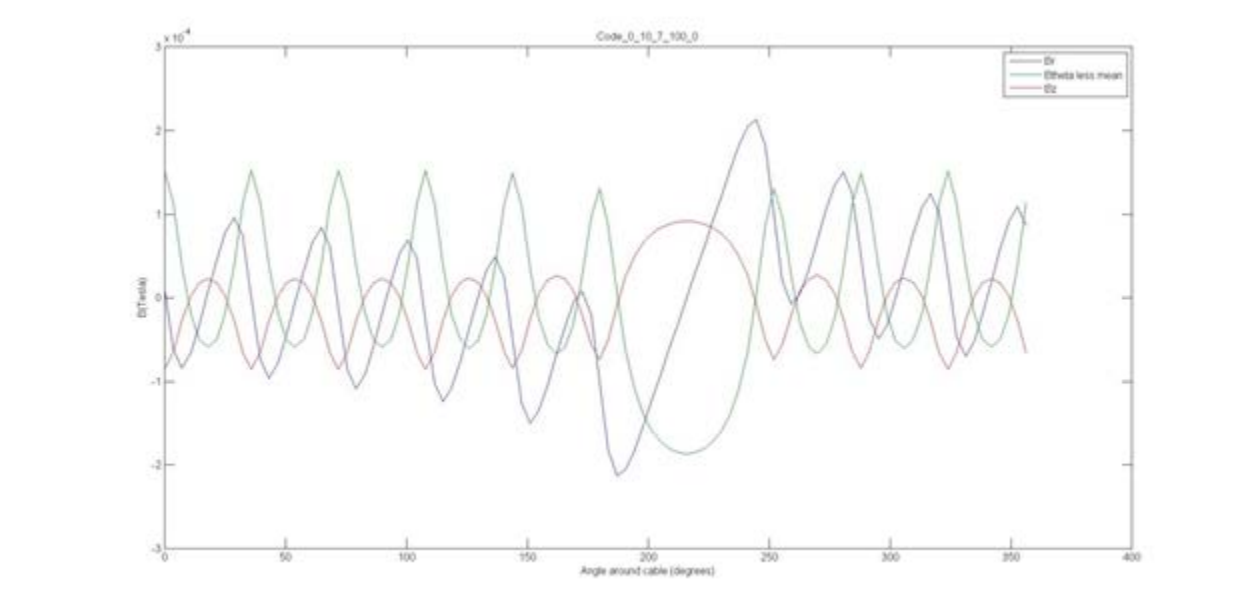

Photo Credit: UC Berkeley

Figure 5: The "Cable Grabber"

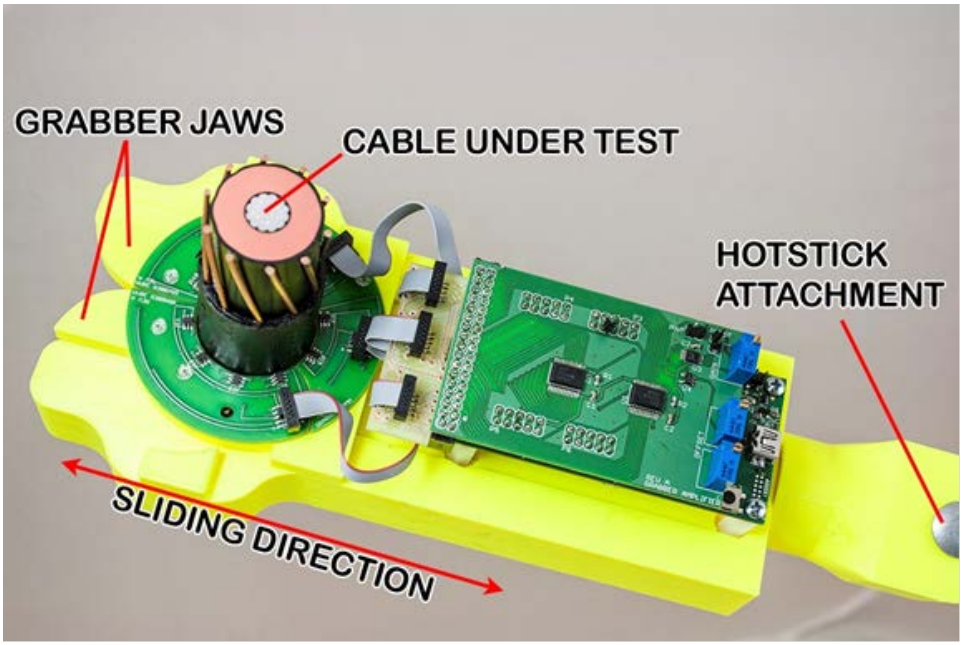

Photo Credit: UC Berkeley

The cable grabber would be mounted on a hot stick (commonly used in the power industry for work on live cables) and attached to the cable at a point where the cable enters a vault (common in the sidewalks of most cities). The jaws of the cable grabber are closed around the cable (Figure 5). The design allows the jaws to open as the grabber is pulled away from the cable. Conversely, the jaws close when the hot stick is used to thrust the grabber onto the cable. Seven of the GMR sensors are seen in Figure 5, with the rest behind the cable in this view. The sensors are connected by the three ribbon cables to the circuits seen on the right. These battery-powered circuits relay data wirelessly from the sensors wirelessly to a receiving circuit attached to a receiving laptop or notebook computer at street level. Thereby there is no electrical connection from the sensing equipment at the cable to equipment or personnel on the street. The mechanical parts of the grabber shown in Figure 5 were manufactured by 3D printing. The head of the grabber is intended for a particular cable diameter/number of CNs but the base detaches from the head and new grabber head for other diameters and numbers of CNs can easily be attached.

Figure 6 shows the output of the Grabber for a cable with all healthy CNs, for one cycle of AC current. Each of the 10 CN curves represents the magnetic field strength measured from that wire, given the orientation of the Grabber relative to the cable. Figure 7 shows the relative amplitudes of the measured sensor data for the 10 CN wires. Figure 8 depicts the Fast Fourier Transform (FFT) analysis performed on the healthy cable plus a cable with one broken CN; the difference between the two cables is pronounced.

Figure 6: Data Output of Grabber GMR Sensors for One AC Cycle

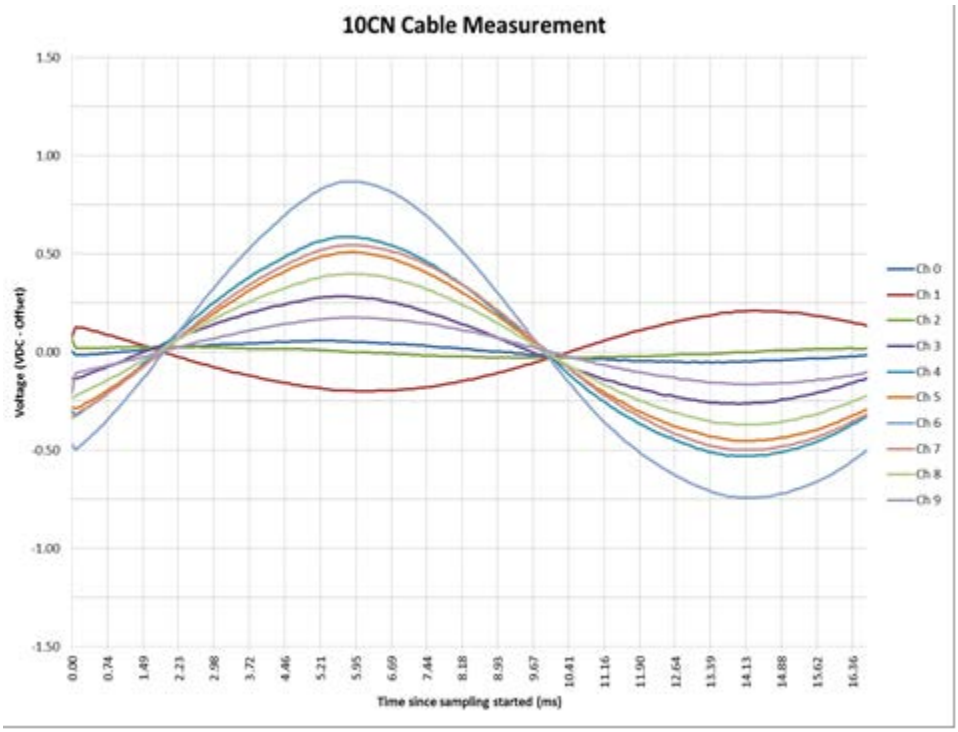

Photo Credit: UC Berkeley

Figure 7: Amplitudes of Measured Sensor Data on a Cable with Healthy CNs

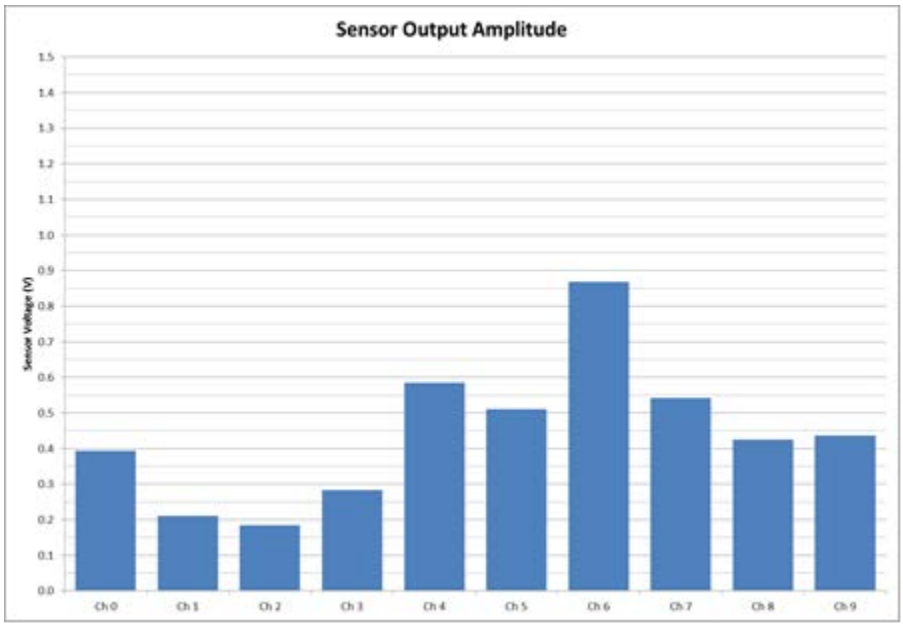

Photo Credit: UC Berkeley

Figure 8: FFT of Measured Sensor Data Showing the Difference between a Cable with All Healthy CNs (blue) and a Cable with a Damaged CN (red)

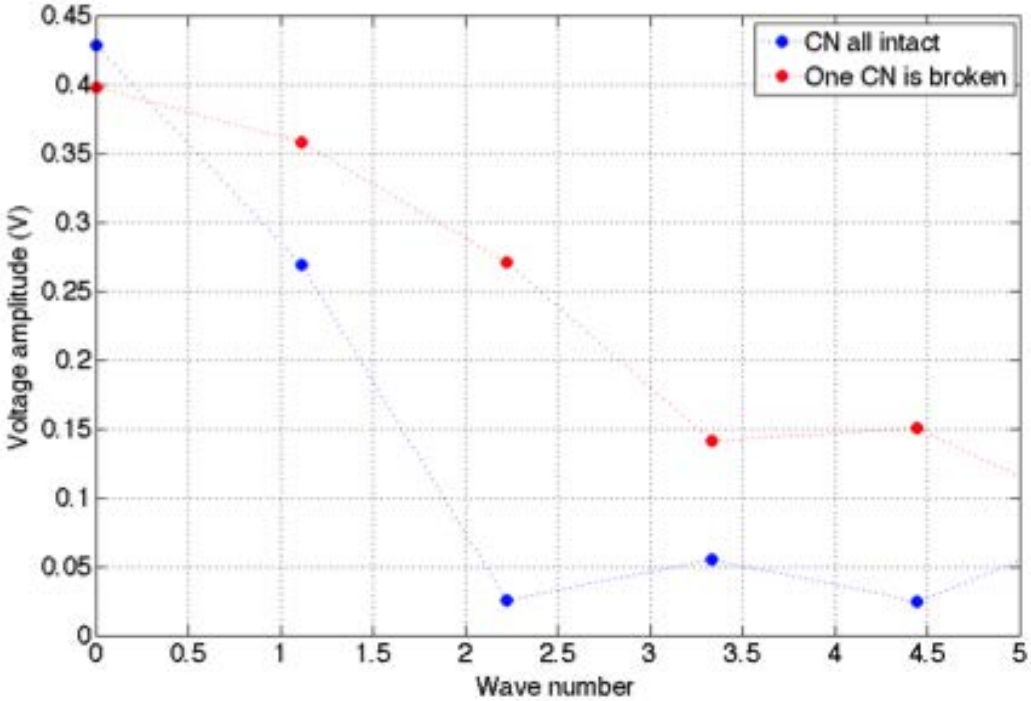

Photo Credit: UC Berkeley

2.4 Laboratory Testing and Development

For laboratory testing, we needed an apparatus that would simulate a situation with a healthy cable as well as one with damaged concentric neutrals

A 22" section of Okonite 5 (part number 160-23-9722) 25kV cable was used; a cross-section of this cable is shown in Figure 9. This particular type of cable is commonly used by PG&E and other utilities for underground power distribution. The cable has a 1/0 AWG stranded aluminum central conductor and 10, 14 AWG solid copper concentric neutrals (CNs). The overall diameter is 1.216 in. Other cable types were also investigated, such as Okonite 5 with flat-strap CNs (part number 140-23-9372) and a larger Okonite 5 cable with an 1100 kcmil central conductor and 12 concentric neutrals.

Figure 9: Okonite 5 25kV 1/0 Cable #160-23-9722

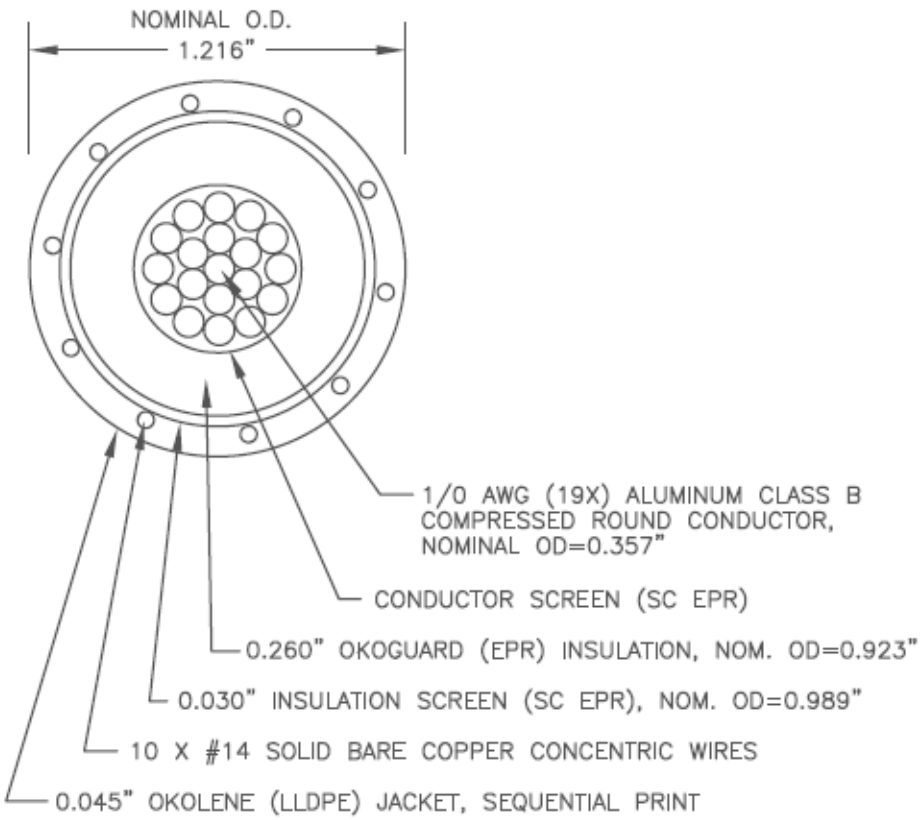

Photo Credit: Okonite Datasheet

All of the 10 CNs in the test cable were connected to a 10' section of 3/0 single conductor wire to form a loop. The loop of wire was run through a 250 turn toroidal transformer. The primary input of the transformer was connected to a variac. By changing the voltage on the variac, we can change the current running through the CNs of the test section of the cable. Each concentric neutral has a disconnect from the circuit to simulate a damaged, non-conducting CN. Great care was taken to ensure good connections on all of the CNs so that the current would be the same in

each. The majority of laboratory testing was done with 100A AC in the loop to provide for 10A in each of the 10 CNs. Clamp on current meters were used to verify the current in each of the CNs during test. Less than 6% difference in current was measured between CNs. A separate AC power source was connected in the opposite direction to the central conductor (CC) of the cable under test. With 300A AC running through the CC, and 100A total running in the opposite direction through the CN's only a minor change was seen in the radial component of the CNs magnetic field, so we omitted the CC current in a number of tests.

A simplified diagram of the laboratory test setup showing the major components is given in Figure 10.

Figure 10: Concentric Neutral Lab Test Setup

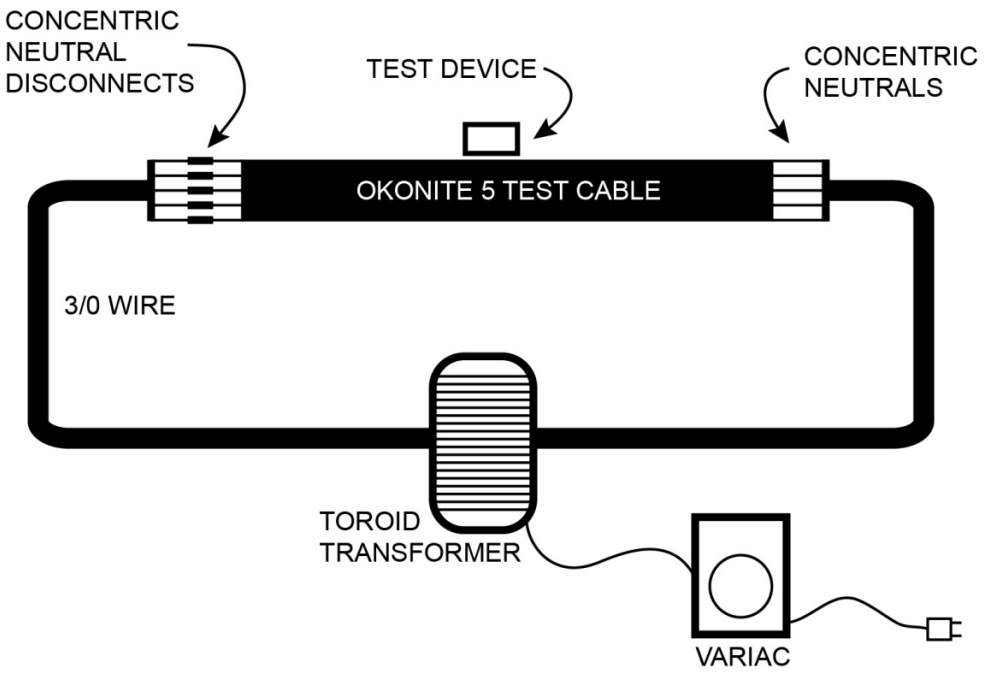

Photo Credit: UC Berkeley

With a reliable test apparatus setup we were able to begin the testing of magnetic field sensors and their orientations with respect to the cable under test. AMR and GMR magnetic field sensors from various manufacturers were evaluated on small breakout boards attached to the cable with zip ties.

With a suitable magnetic field sensor selected, development work on the mechanics of positioning the sensors on the test cable began. Figure 11 shows a GMR sensor in a small outline integrated circuit (SOIC) configuration attached to the test cable.

Figure 11: Test Jig for a GMR Sensor in an SOIC Package

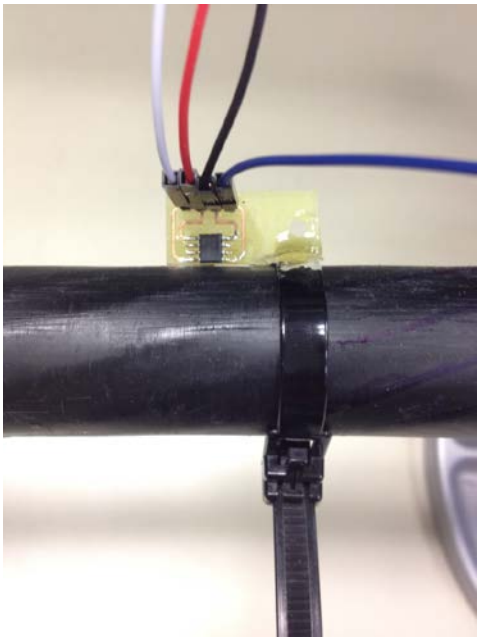

Photo Credit: UC Berkeley

Pre-Grabber Designs for Concentric Neutral Monitoring:

The earliest designs consisted of one 3-axis GMR sensor per concentric neutral evenly spaced around the cable. Mounting methods explored included individually wired sensors and thin flexible printed circuit boards (see Figure 12).

Figure 12: GMR Sensors in Various Mounting Configurations

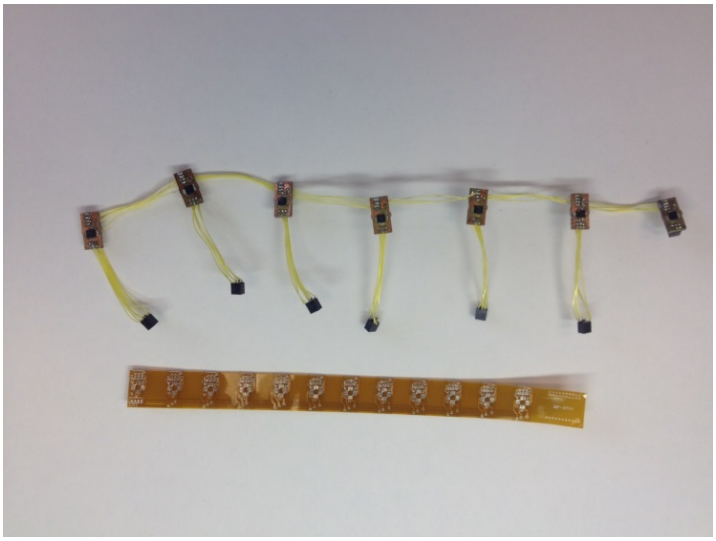

Photo Credit: UC Berkeley

Collecting and analyzing magnetic field data from 30 channels in addition to the set/reset circuitry necessary for AMR sensors, proved to be non-trivial. The ideal design would need to limit the number of data lines, while still providing enough data for a useful measurement. This led to the design of the clamp device shown in Figure 13.

Figure 13: Clamp Prototype for Concentric Neutral Testing

Photo Credit: UC Berkeley

In the clamp device, there are two independent carts, each driven by a stepper motor, two 3-axis AMR sensors (later updated to GMR sensors), a processor and a battery. The carts move around the cable under test, and use the onboard sensors to take readings from multiple positions. The sensor locations can be seen in Figure 14. This design proved to be problematic because the magnets in the motors were interfering with the magnetic field from the cable. For this design to work, the sensors needed to be placed far away from the motors, which made the device un-desirably large.

Figure 14: Top View of Clamp Prototype

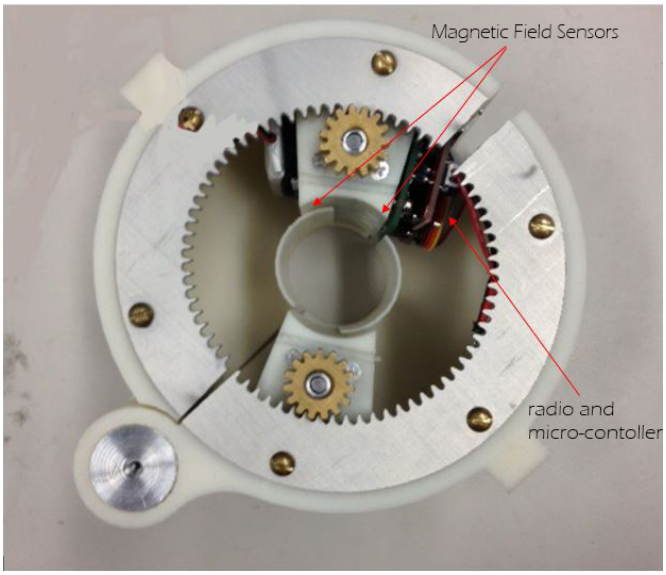

Photo Credit: UC Berkeley

Further research showed that data from only the radial component of the magnetic field would be sufficient to diagnose concentric neutral failure. This made it possible to return to a design that used several sensors at equal spacing around the cable. The grabber effectively replaced the clamp and thin PCB designs by using several single axis GMR sensors.

Initial grabber mechanical prototypes were made from laser-cut medium-density fiberboard (MDF). When the clearances and placement of sensors were worked out, custom, curved PCBs were manufactured to hold the sensors precisely in position against the test cable. As the design progressed, 3D printed fixtures replaced the MDF. With the mechanical aspects of the grabber maturing, the electronic section added an amplifier for the sensors, analog multiplexer, microprocessor and Bluetooth LE radio. Figure 15 shows the chronological progression of the grabber prototypes, from left to right.

Figure 15: Grabber Prototypes

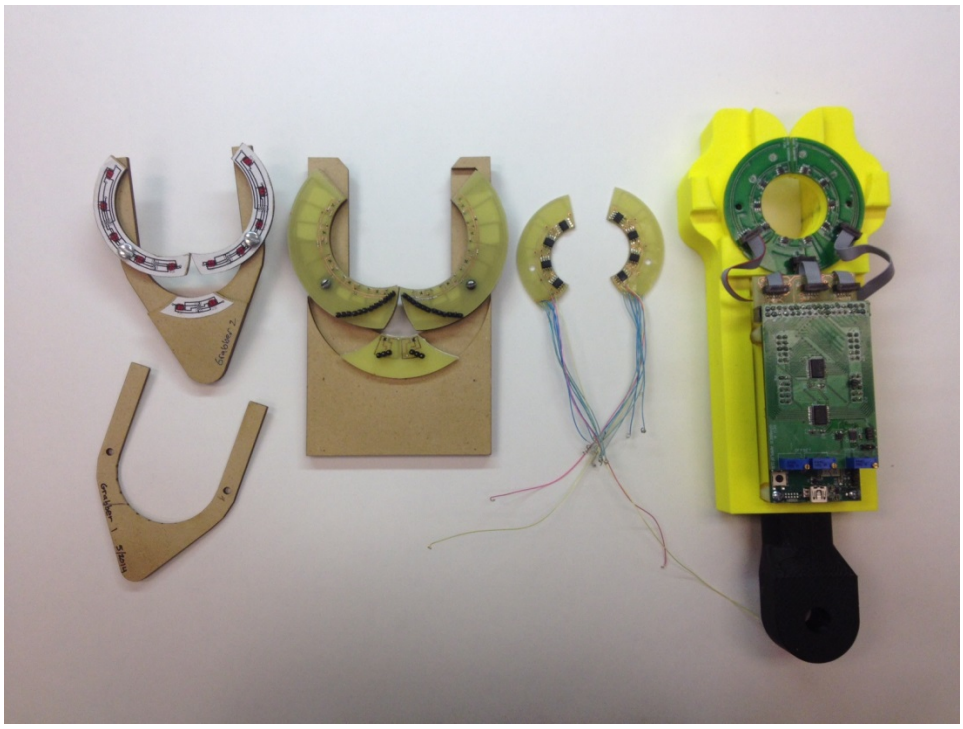

Photo Credit: UC Berkeley

2.5 Field Testing

Despite numerous attempts, the research team was repeatedly unable to find a collaborating utility partner for field-testing. In exploring additional options for field-testing, the research team contacted colleagues at the Lawrence Berkeley National Laboratory and Richmond Field Station (also known as the Berkeley Global Campus) to determine if there were suitable cables for field-testing. Unfortunately, neither alternative site possessed cables with concentric neutrals. Acknowledging these continued attempts, the California Energy Commission ultimately released the research team from the field-testing requirement of the statement of work.

2.6 Conclusions

Using the developed Grabber device, the research team has successfully demonstrated the ability to identify failed concentric neutrals within an energized cable in a laboratory environment. The Grabber device connects to industry standard hot sticks to allow technicians to keep a safe distance from the energized cable. The grabber is easily placed on cables by simply pushing the "jaws" of the Grabber against the cable and is removed by simply pulling it back. These quick tests analyze the cable 100 ft. in each direction from the test location, allowing technicians to determine the integrity of physically unreachable cable. The results of these tests are transmitted immediately over Bluetooth to the technicians nearby computer. This diagnostic tool allows utilities to rapidly test energized cables and make a determination of a cable's health

before a failure happens. While we were not able to partner with a utility to test the Grabber in the field on an in-service, energized cable, we recommend that further research efforts consider performing such field tests in order to determine what additional issues may need to be considered for utility adoption of the technique.

Finally, the team is continuing to revise the Grabber design such that it could be left on a cable indefinitely as an inexpensive condition-monitoring device for underground cables.

CHAPTER 3:
Online Mems Underground Cable Diagnostic Sensors

3.1 Introduction

Presently, the most commonly used methods for determining the condition of underground cables require that the cables be taken off-line, causing customer outages and a loss of revenue. It is therefore desirable to seek diagnostic means for inspecting underground in-service cables, which is the goal of this project.

A problem observed with certain underground power distribution cables is the formation in their insulation of so-called "water trees" that can lead to the explosive destruction of the cables while in service, resulting in unplanned customer outages, and requiring costly cable replacement.

Figure 1 has previously shown the cross-section of a typical underground power distribution cable. According to the most accepted theory, water trees are believed to begin as micron-sized air-filled voids in the insulation layer of underground AC power distribution cables. Figure 16 shows the cross-section of a typical cable in which such voids appear in the insulation, which is typically but not exclusively cross-linked polyethylene (XLPE). These underground cables usually have an outer polymeric jacket surrounding the CNs, but moisture may penetrate the jacket from the surrounding duct or soil and ultimately enter the insulator and fill the existing voids.

Figure 16: Development of Water Trees in Underground Cable Insulation

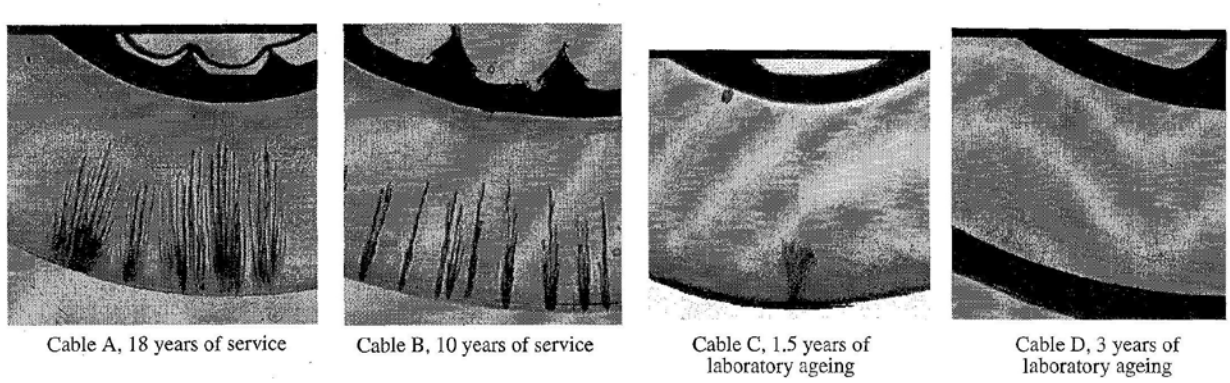

Photo Credit: Hvidsten et al., Jan 1998.

As a result of the large time-varying forces (Maxwell stresses) produced by successive cycles of the applied voltage, the voids tend to elongate and tear the insulation, creating ducts that connect the initial voids and form water-filled paths that extend generally in a radial direction between the center conductor and the concentric neutrals.

The electrical permittivity of such water-filled ducts in the polyethylene insulator (relative permittivity 2.3) is increased because of the high permittivity of water (81), and the electric

conductivity of the duct filled with impure water becomes higher than that of the virgin insulation. As a result, over time these ducts, which are capable of conducting charge, elongate. Eventually, perhaps over decades, these ducts form tree-like damage structures – water trees – in the insulation. Ultimately, these water trees may bridge the formerly insulated space and permit electrical breakdown of the cable in which a small amount of charge (a few picocoulombs) is conducted rapidly (in a nanosecond) between the small-diameter (a micron) water tree tip. The result is the local deposition of energy in a very small region and destruction of the cable.

The References at the end of this report provide further information about water trees.

3.2 Goals and Objectives

The goal of this project was to find a way to evaluate the degree of growth of water trees in energized underground power distribution cables for the reasons described above.

3.3 Technical Approach of The Rf Coupling Technique

The research team hypothesized that it was viable to use radio-frequency (RF) probing signals injected into an energized water-treed power distribution cable to determine the presence of water trees. Since water trees cause changes in both the permittivity and the conductivity of cable insulation, they could cause possibly measurable changes in either (or both) the velocity and attenuation of an RF probing signal.

To test this hypothesis, we needed typical distribution cable containing water trees, as well as a way to energize it at a suitably high AC voltage, a way to inject an RF probing signal into the energized cable, and the ability to detect changes in the cable velocity of propagation and/or its attenuation caused by the applied power-frequency voltage. From Hvidsten's work [Hvidsten et al., Oct. 1998], we might also expect that the velocity and/or attenuation of the probing RF signal might change cyclically (at twice the rate of change of the power-frequency voltage). This is because the magnitudes of the expected changes of both the permittivity and the conductivity will increase when the amplitude of the voltage of the low-frequency power supplied to the cable is increased. Thus we would want to measure changes of the RF probing signal velocity and loss at times when the power frequency voltage is high and compare those with their values of the applied low-frequency voltage when it is very low (e.g., at its zero crossing).

While on a field trip kindly provided by a local utility, we found a convenient way to inject an RF probing signal into an energized power cable. The termination shown in Figure 17 is commonly used to connect and disconnect sections of power cable in cable vaults. The small insulating polymeric plug on the side of the device can be inserted or removed with a hot stick to provide access to a small-valued (e.g., 32 pF) capacitor that is connected internally to the center conductor of the cable. In order to inject a high frequency (megahertz) into an energized cable, we connected a high-pass filter to the center conductor at that port and supplied an RF probing power source to that fitting. We connected a lab power supply capable of delivering a

5 kV, 60 Hz output to the center conductor of the cable, and were able to safely measure the RF properties of a 100-foot length of 12 kV underground distribution cable.

Figure 17: RF Penetration Concept Diagram and 3D Model of Underground Cable "Elbow"

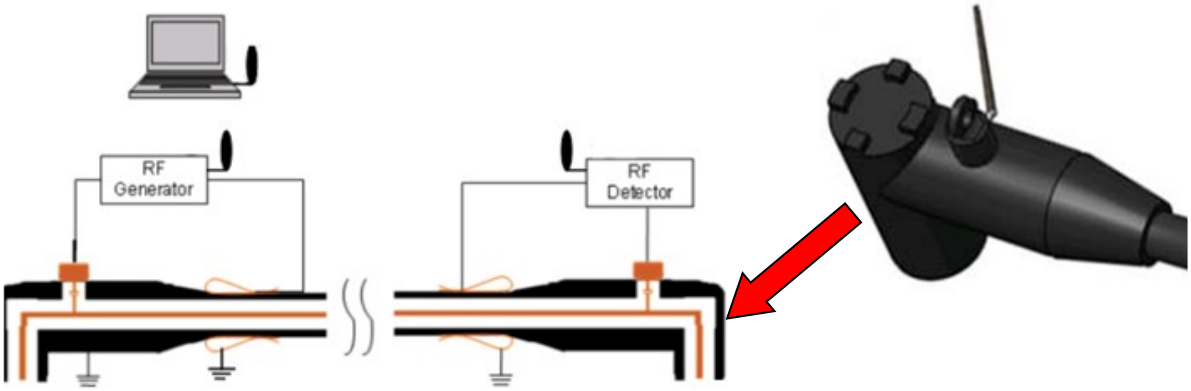

Photo Credit: UC Berkeley & SolidWorks

3.4 Laboratory Testing and Development

Obtaining used cable known to contain water trees turned out to be very difficult. It appears that such cable is disposed of by utilities when off-line measurements indicate that substantial water-treeing of a cable has occurred, or after explosive destruction of cable. During much of this work, we were unable to obtain sections of cable known to contain water trees. For RF probing of energized cables we propose connecting RF instruments to the small ports on the loadbreaks. We should note that it would be possible to attach semi-permanently small modules to the loadbreaks that communicate wirelessly with RF sources and that transmit their measurements wirelessly to receivers (e.g., laptops) located above ground near the cable vaults.

Water trees can be observed visually in cables, but the process is destructive as it typically involves preparing thin sections of the insulation cut from a cable and observing them optically after injecting dye (see examples by searching for water trees in Google Images). Hence, we tried preparing water-treed samples of cable using a process involving heating a short section of cable immersed in salt water for days with a high voltage applied. Nondestructive testing of that cable did not give clear evidence of the presence of water trees or of interaction with RF probing signals. It is instructive to note that some of the investigations described in the References were carried out by researchers associated with large, typically Scandinavian utility companies that had literally hundreds of samples of damaged cables available for study.

Agilent Technologies loaned us a network analyzer, which we used in our RF measurements. With a high-pass RF filter connected directly to a 100-foot length of cable we were able to make measurements of the velocity of propagation by measuring the time delay in propagation of an input RF pulse from input to reflection at the far end of the cable and back. We could also measure the attenuation of the cable from the amplitude of the signal reflected from the far end of the cable. Unfortunately, the lowest RF frequency of the network analyzer was 30 MHz and we had no way of synchronizing the return signals with a given phase of the 60 Hz power line

frequency, and so were unable to detect a synchronized change of cable permittivity or conductivity.

Late in the project, EPRI provided three short lengths of cable that had evidence of water trees. We rented a Megger, a commercial device that applies a high (5 kV) DC voltage to a cable and measures the extremely high resistance between the center conductor of the cable and locations along the bared insulation of the 3-foot long cable. We measured resistances of one of the cables that had been held in 90°C salt water for two days. We identified regions where the Megger showed resistance lower than that in neighboring regions. We then heated one of those cables (some articles suggest reheating to renew the water trees) and supplied RF energy from a laboratory function generator up to a few megahertz to the center conductor of that cable while scanning the outside of the insulator with a probe whose output was displayed on an oscilloscope.

The cable was stripped of its (ribbon) concentric neutral over only a few inches length in order to maintain its ability to act as a coaxial cable for the RF probing signal. We were unable to find regions of the insulation where the detected RF signal was significantly different from that picked up in neighboring regions, which would have indicated a change in the RF properties of the insulation owing to the presence of water trees which would have produced insulation having higher than average permittivity or conductivity.

In Section 5.4 (Recommendations for Further Research), we suggest several investigations that might be useful in evaluating the validity of the proposed RF probing of energized underground cables to detect water trees.

3.5 Field Testing

Despite numerous attempts, the research team was repeatedly unable to find a collaborating utility partner for field-testing. In exploring additional options for field-testing, the research team contacted colleagues at the Lawrence Berkeley National Laboratory and Richmond Field Station (also known as the Berkeley Global Campus) to determine if there were suitable cables for field-testing. Unfortunately, neither alternative site possessed cables with concentric neutrals. Acknowledging these continued attempts, the California Energy Commission ultimately released the research team from the field-testing requirement of the statement of work.

3.6 Conclusions

The description of water tree behavior given by Hvidsten suggests that when the electric field between the cable's conductors is high enough, there will be regions whose electrical permittivity and conductivity reach higher values than those of virgin insulation. Some of the water tree investigations cited in the publications listed below contain images of such regions, but there are yet unanswered questions regarding those regions that bear upon their detectability in energized cables. How readily detectable might such regions be if radio frequency pulses are injected into an energized water treed cable, considering that water treed regions might be relatively few or that the trees very short in any given cable? Can the sizes of

the damaged regions of the insulation change rapidly (i.e., as the applied low-frequency voltage on the cable varies periodically at 50 or 60 Hz)? Answers to these questions would help determine whether the RF probing technique might work in energized treed cables.

Suggested topics for further investigations:

1. Analyze the effects (changes of velocity of propagation and loss, production of reflections) on a propagating RF wave in an energized cable containing water trees of assumed size and spatial distribution. Such information could guide further experimental attempts to develop the RF probing method of determining the severity of water treeing in online cables.

2. Determine whether water tree dimensions change dynamically as the instantaneous cable voltage changes cyclically from zero to its maximum value. Such rapid changes could be determined from microscopic observations made through a window in the cable jacket and outer semiconductor. Such changes would affect the RF properties (wave velocity and attenuation) and help in identifying their presence in online testing.

3. Experiment with RF probing in a commercial cable undergoing conventional off-line "tan-delta" testing (as conducted by commercial utilities). In such testing, cables are driven with high voltages at a very low frequency (e.g., 0.02 Hz). It should be much easier at this low frequency to synchronize an RF probe temporally with the drive voltage. This could answer the questions of whether and to what extent changes in the filling of water trees are synchronized with peaking of the low-frequency high electric field in the cables. This could help in developing means for synchronizing RF measurement tools with the changes of cable voltage in conventionally powered on-line cables.

CHAPTER 4:
Pre-Commercialization of Method for Assessment of Concentric Neutrals

4.1 Introduction

The research team was tasked with the exploration of commercialization options of the "Grabber" device described in Chapter 2.

4.2 Preliminary Pre-Commercialization Investigations

At the start of the project, discussions were held with Agilent Technologies and SmartSense, resulting in substantial progress in establishing potential strategic collaboration plans with these entities. Agilent Technologies donated equipment and provided guidance. SmartSense had recently been awarded a $100K commercialization grant from the California Energy Commission, and the team was actively working with Smart Sense to continue developing a technology transfer plan in support of the eventual commercialization effort.

For reasons that are not entirely clear, SmartSense decided not to continue pursuing a partnership with the research team; it is not clear as of this writing that SmartSense still exists as a company. Discussions with Agilent Technologies regarding further commercialization of our technology have continued.

Other companies that have expressed a willingness to discuss possible commercialization include Wireless Industrial Technologies, and TAVNetworks.

4.3 Commercialization Plan

As a result of the research carried out for this project, patentable intellectual property was developed. A patent application was submitted for the RF technique for detecting water trees in energized cables, and the patent was issued. A provisional patent application for the Grabber device for detecting faults in concentric neutrals was also submitted. (Appendix B contains details for all patents applied for by UC-Berkeley that relate to the technical aspects of this project.)

While these patent applications were being processed and filed, a temporary hiatus in commercialization discussions with potential companies was in place. Once the patents were filed and disclosed, permission was granted by the Berkeley Office of Intellectual Property & Industry Research Alliances to continue these discussions in pursuit of commercialization. The Berkeley team plans to resume these efforts in early 2015.

CHAPTER 5:
Conclusions and Recommendations

5.1 Concentric Neutral Diagnostic Method

Using the developed "Grabber" device, the research team has successfully demonstrated the ability to identify failed concentric neutrals within an energized cable in a laboratory environment. The Grabber connects to industry-standard hot sticks to allow electrical technicians to keep a safe distance from the energized cable when taking measurements. The Grabber is easily placed on cables by simply pushing the "jaws" of the device against the cable, and is removed from the cable by simply pulling the hot stick away. These quick tests analyze the cable 100 feet in each direction from the test location, allowing technicians to determine the integrity of physically unreachable cable. The results of these tests are transmitted immediately over Bluetooth to the technician's nearby computer. This diagnostic tool allows utilities to rapidly test energized cables and make a determination of a cable's health before a failure happens.

Finally, the team is continuing to revise the Grabber design such that it could be left on a cable indefinitely as an inexpensive condition-monitoring device for underground cables.

5.2 Water Tree Diagnostic Method

The description of water tree behavior [Hvidsten et al., October 1998] suggests that when the electric field between the cable's conductors is high enough, there will be regions whose electrical permittivity and conductivity reach higher values than those of virgin insulation. Some of the water tree investigations cited in the publications listed below contain images of such regions, but there are yet unanswered questions regarding those regions that bear upon their detectability in energized cables:

- How readily detectable might such regions be if radio frequency pulses are injected into an energized water-treed cable, considering that water-treed regions might be relatively few or that the trees very short in any given cable?
- Can the sizes of the damaged regions of the insulation change rapidly (i.e., as the applied low-frequency voltage on the cable varies periodically at 50 or 60 Hz)?

Answers to these questions would help determine whether the RF probing technique might work in energized treed cables. The following are suggested topics for further investigations:

1. Analyze the effects (changes of velocity of propagation and loss, production of reflections) on a propagating RF wave in an energized cable containing water trees of assumed size and spatial distribution. Such information could guide further experimental attempts to develop the RF probing method of determining the severity of water treeing in online cables.
2. Determine whether water tree dimensions change dynamically as the instantaneous cable voltage changes cyclically from zero to its maximum value. Such rapid changes

could be determined from microscopic observations made through a window in the cable jacket and outer semiconductor. Such changes would affect the RF properties (wave velocity and attenuation) and help in identifying their presence in online testing.

3. Experiment with RF probing in a commercial cable undergoing conventional off-line "tan-delta" testing (as conducted by commercial utilities). In such testing, cables are driven with high voltages at a very low frequency (e.g., 0.02 Hz). It should be much easier at this low frequency to synchronize an RF probe temporally with the drive voltage. This could answer the questions of whether and to what extent changes in the filling of water trees are synchronized with peaking of the low-frequency high electric field in the cables. This could help in developing means for synchronizing RF measurement tools with the changes of cable voltage in conventionally powered on-line cables.

5.3 Recommendations for Further Research

Future aspects of our research into on-line diagnostic techniques using advanced sensor technology can address the growth of renewable energy such as wind farms and solar installations, both large commercial plants as well as rooftop systems throughout counties and cities. Renewables can introduce variability into electricity grids (the sun is not always shining, nor the wind blowing). These new energy sources require improved control and monitoring of energy grid systems using real-time data on voltage, current, phase angle, power factor, and temperature. Data need to be supplied continuously and consistently to grid managers for many decades without interruptions.

On-line sensors can monitor city support systems such as large generators, water pumps and motors. In industry, this has become known as Condition Based Monitoring (CBM) and in more popular writings the "industrial internet." The goal of CBM is to determine when equipment requires maintenance or replacement to avoid failure and outage costs. Present practices of time-based maintenance result in both unnecessary maintenance and failure to detect imminent failures.

Figure 18 shows a self-powered wireless sensor node attached to an overhead power line conductor for continuous monitoring of the current flow in the line. In this case, our AC electromechanical energy harvester powers the entire sensor node, including a wireless radio platform, a power conditioning circuit and analog sensors. The harvester converts the magnetic field energy emanating from the current in the power lines to micro-scale electric energy to support the node. The prototype continuously measures conductor temperature, which is strongly related to safety and efficiency, for data analysis by grid operators.

Figure 18: A Communicating Sensor-node Powered by AC Electromechanical Energy Harvesting

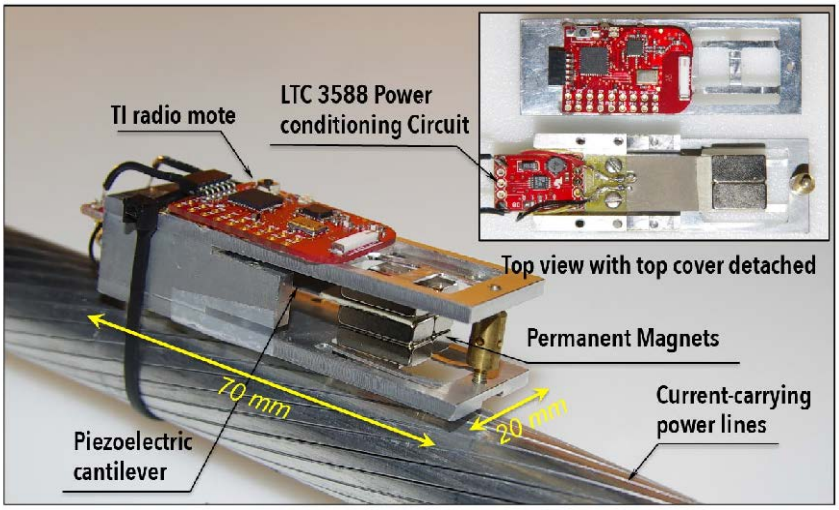

Photo Credit: UC Berkeley

Figure 19 shows a self-powered vibration sensor installed on an industrial motor for use in case studies on high-value facilities or products that have an associated operational vibration spectrum. Specifically, large industrial motors and generators exhibit accelerations ranging from 0.05 to 0.2 g at frequencies of 120 Hz or less. As a first step in our research, base-line vibration characteristics of new pumps were measured. Second, data were obtained from power-industry experts to establish the vibration amplitude pre-condition at which pumps quickly deteriorate (a y-axis acceleration greater than 0.2 g at 20 Hz being chosen).

Figure 19: Self-powered Vibration Sensor for Condition Based Monitoring (CBM)

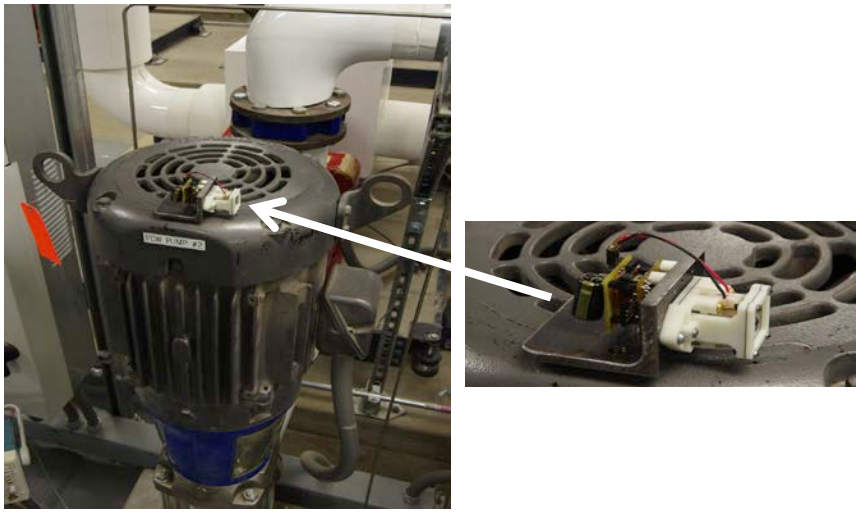

Photo Credit: UC Berkeley

Third, these *data analytics* established a predictable schedule for long-term equipment monitoring. (The resulting journal paper "Vibration Energy Harvesting to Power Condition Monitoring Sensors for Industrial and Manufacturing Equipment" won the SAGE Best Paper Prize in 2013 from the editorial board of the long-standing *Journal of Mechanical Engineering Science*.)

GLOSSARY

Term	Definition
AC	Alternating current
AMR	Anisotropic Magneto-Resistive
AWG	American Wire Gauge
CbM	Condition-based Monitoring
CN	Concentric neutral (of underground cables)
EPIC	Electric Program Investment Charge
FFT	Fast Fourier Transform
GMR	Giant magnetoresistance
Hz	Hertz
kV	Kilovolt
MDF	Medium-density fiberboard
MEMS	Microelectromechanical systems
RF	Radio frequency
Smart Grid	Smart Grid is the thoughtful integration of intelligent technologies and innovative services that produce a more efficient, sustainable, economic, and secure electrical supply for California communities.
SOIC	Small outline integrated circuit
XLPE	cross-linked polyethylene

REFERENCES

Ciuprina, F.; Hornea, A.; Andrei, L.: *AC Breakdown Strength and Dielectric Response of Water-treed Low Density Polyethylene,* 8th International Symposium on Advanced Topics in Electrical Engineering (ATEE), Bucharest, Romania, pp. 1-4, May 23-25, 2013.

Das-Gupta D.K.; Scarpa, P.C.N.: *Polarization and Dielectric Behavior of AC Aged Polyethylene,* IEEE Transactions on Dielectrics and Electrical Insulation, vol. 3, No. 3, pp. 366-374, June 1996.

Hvidsten, S.; Ildstad, E.; Holmgren, B.; Werelius, P.: *Correlation between AC Breakdown Strength and Low Frequency Dielectric Loss of Water Tree Aged XLPE Cables,* IEEE Transactions on Power Delivery, vol. 13, no. 1, pp. 40-45, January 1998.

Hvidsten, S.; Ildstad, E.; Sletbak, J.; Faremo, H.: *Understanding Water Treeing Mechanisms in the Development of Diagnostic Test Methods,* IEEE Transactions on Dielectrics and Electrical Insulation, vol. 5, no. 5, pp. 754-760, October 1998.

Kuschel, M.; Kalkner, W.: *Dielectric Response Measurements in Time and Frequency Domain of Different XLPE Homo- and Co-polymer Insulated Medium Voltage Cables,* IEE Proceedings – Science Measurement and Technology, 146(5), pp. 243-248, 1999.

Moreau, E.; Mayoux, C.; Laurent, C.; Boudet, A.: *The Structural Characteristics of Water Trees in Power Cables and Laboratory Specimens,* IEEE Transactions on Dielectrics and Electrical Insulation, vol. 28, No.1, pp. 54-64, February 1993.

Oyegoke, B.; Hyvonen, P.; Aro, M.; Ning, G.: *Application of Dielectric Response Measurement on Power Cable Systems,* IEEE Transactions on Dielectrics and Electrical Insulation, vol. 10, no. 5, pp. 862-873, October 2003.

Werelius, F.; Tharning, P.; Eriksson, R.; Holmgren, B.; Gafvert, U.: *Dielectric Spectroscopy for Diagnosis of Water Tree Deterioration in XLPE Cables,* IEEE Transactions on Dielectrics and Electrical Insulation, vol. 8, no. 1, pp. 27-42, February 2001.

Zaengl, W.S.: *Dielectric Spectroscopy in Time and Frequency Domain for HV Power Equipment, Part I: Theoretical Considerations,* IEEE Electrical Insulation Magazine, vol. 19, no. 5, pp. 5-19, September/October 2003.

APPENDIX A:
UC Berkeley Patent and Disclosure Information Relevant to Future Commercialization

B13-019 "Microfabricated Ultrasonic Gas-Flow Sensors for Natural Gas Pipelines"

Disclosed to OTL: August 29, 2012

Inventors: Richard White, Adam Tomheim

Status: Actively marketing. No patent application has been filed.

B14-125 "Methods for Detecting Energy Theft from Powerlines"

Inventor: Richard White

Disclosed to OTL: January 30, 2014

Status: Provisional Patent Application filed January 30, 2014

Provisional Application No. 61/933,778

B12-128 "Deconvolution of Cross-Coupled Magnetic Fields for Electric Current Measurement"

Inventors: Richard White, Qilang Xu, Igor Paprotny

Disclosed June 26, 2012

Status: Provisional Patent Application filed May 31, 2012

Provisional Application No. 61/653,709

B09-056 "Self-Calibrating Proximity-Based Sensor for AC Electric Current"

Inventors: Paul Wright, Richard White, Eli Leland

Disclosed to OTL: November 6, 2008

Status: Actively marketing. No patent applications have been filed.

B09-062 "Passive Wireless Proximity Current Sensor for Circuit Breakers"

Inventor: Richard White

Disclosed to OTL: December 8, 2008

Status: Actively marketing. No patent applications have been filed.

B09-037 "External Proximity Voltage Sensor for Insulated Power Distribution Cable"

Inventor: Richard White

Disclosed to OTL: September 9, 2008

Status: Actively marketing. No patent applications have been filed.

B13-035-1 "Dynamic Microfluidic Methods of Assaying Molecule Switching and Devices for Practicing the Same"

Disclosed to OTL: October 2, 2012

Inventors: Amy Herr, Augusto Tentori, Alex Hughes

Status: Provisional Patent Application filed October 8, 2012

Provisional Patent Application No. 61/710,988

B13-035-2 "Microfluidic Methods of Assaying Molecule Switching and Devices for Practicing the Same"

US Utility Patent Application filed September 24, 2013

Inventors: Amy Herr, Augusto Tentori, Alex Hughes

Utility Patent Application No. 14/035,846

US Utility Application Published: June 12, 2014

US Publication No. 2014-0158537

B15-035-1 "Determining Integrity of Concentric Neutrals in Energized, Underground Cables"

Disclosed to OTL: September 11, 2014

Inventors: Richard White, Skot Croshere, James Evans, Eric Talamantez

Status:

Provisional Patent Application filed November 20, 2014

Provisional Patent Application No. 62/082,505

APPENDIX B:
60 Hz AC Current Sensor Design

Design of an Ultra-low-power, Gradient-based AC Current Sensor Configured for Maximum Dynamic Range

Christopher Sherman
University of California, Berkeley

As part of our overall sensors and diagnostics research, we have pursued the design of an ultra-low-power, MEMS-based AC current sensor for use in continuous monitoring applications. While our other efforts focus on off-the-shelf, magneto-resistive-based current sensors, these sensors are based on permanent magnets and piezoelectric elements. Using this method, we achieve sensing for one to two orders of magnitude less energy consumption than any other non-contact method and help enable leave-in-place sensing applications.

Our design uses a combination of custom-fabricated and off-the-shelf components. A pair of clean-room-fabricated custom piezoelectric devices is fitted with two commercially-fabricated rare-earth magnets. The two devices are connected electrically and "buffered" with a commercially-available, ultra-low-power amplifier that is mounted on a rapid-prototyped circuit board. A photo of a sensor prototype is shown in Figure 1.

Figure 1: Proximity-Based AC Current Sensor

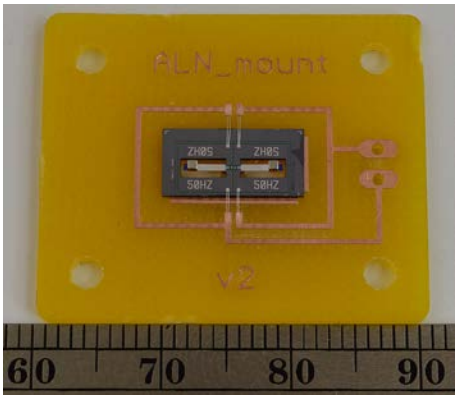

Photo Credit: UC Berkeley (Christopher Sherman)

In order to maximize the operational range of these current sensors, we have designed them using a "shoulder straddling" approach. Were we to design these devices to operate at their natural (resonant) frequency, they would have large outputs but would be *very* nonlinear and have a limited range of operation. If we instead configured the sensors to sense as wide a range of frequencies as possible, the sensor output voltage would be too small. Instead, we have designed the devices to be slightly removed from their resonant frequencies, in order to get the largest range of operation while still being able to sense 60 Hz and 180 Hz signals.