Energy Research and Development Division
FINAL PROJECT REPORT

EFFICIENT ELECTRONICS THROUGH MEASURMENT AND COMMUNICATION

Appendix A-C

Prepared for: California Energy Commission
Prepared by: Lawrence Berkeley National Laboratory

MARCH 2014
CEC-500-2015-038-AP

APPENDICES

Appendix A: Communicating Power Supplies .....

Appendix B: Adding Low Cost Internet Connectivity and Control to Your Design .....

Appendix C: Development of a Communicating Power Supply to Assist in Energy Monitoring and Management .....

APPENDIX A:
Communicating Power Supplies

Communicating Power Supplies: Bringing the Internet to the Ubiquitous Energy Gateways of Electronic Devices

Steven Lanzisera, *Member, IEEE*, Andrew R. Weber, Anna Liao, Dominic Pajak, and Alan K. Meier

***Abstract*—Saving energy in buildings is often hampered by lack of detailed information about what is using energy, how much it is using, and how to automatically and remotely control devices. The problem is especially acute for the large number of small, energy-using devices that are present in both residential and commercial buildings. Most of these products use a switching AC to DC power supply to operate electronic and other internal components. We describe a "communicating power supply" to enable communication of energy and control information between the device and a building management system or other central entity. We developed a proof-of-concept system of Internet connected communicating power supplies and demonstrated both energy reporting and control utilizing a custom, cloud-based information clearing house. If communicating power supply technology became widespread in devices, a combination of automated and human interactive solutions would enable high levels of energy savings.**

***Index Terms*—Energy efficiency, Energy management, Energy reporting, Green buildings, Switched-mode power supply**

I. Introduction

IDENTIFYING and reducing energy waste is challenging when there is limited information about which devices are using how much energy. With the proliferation of smaller energy-using devices in residential and commercial buildings (i.e., plug loads), the number of individual devices and their aggregate energy use is increasing. In homes and commercial buildings, plug loads represent 30% of total electricity use [1, 2]. Moreover, the amount of electricity used by plug loads is growing faster than any other load category in both sectors [3]. A large fraction of these loads are electronics, and electronic devices present a unique and excellent opportunity to leverage the Internet of Things (IoT) for understanding and reducing energy use.

Electronic devices are among the first everyday devices to be connected to the Internet so that they can benefit from Internet-based content. Televisions and game consoles now come standard with networking capability, and these devices, along with traditionally networked devices like computers, are driving much of the increase in building energy use. Today these devices do not have a built in capability to measure and report their energy use or receive control input over the network. As a result, they cannot participate in systems to improve whole building energy use or integrate fully with renewable energy sources or the electricity grid. Network connectivity is critical for these tasks and serves as one driver for the IoT. Electricity metering is important for understanding energy efficiency tradeoffs and advanced methods of grid and renewable energy integration, but metering has proven expensive and complicated thus far [1].

We introduce the concept of the communicating power supply (CPS) that adds electricity metering, computation and communication to electronic devices, and we also demonstrate example applications that can be performed with this infrastructure in place. We propose to add metering by utilizing the properties of the ubiquitous AC to DC switching power supplies present as part of virtually every electronic device. These power supplies switch voltage and current through a transformer at rates between 1kHz and 100kHz depending on input voltage and power requirements, and measuring these variables allows us to cheaply measure the power being handled by the power supply. Adding the basic measurement capabilities to a power supply costs $0.10, and adding the microprocessor and communications (if they do not already exist for other applications) adds modestly to the overall device cost. These very low costs place electricity metering and reporting in the reach of very cheap devices like compact fluorescent or light-emitting diode (LED) light bulbs and battery chargers. Appliances that primarily use power through motors or resistive heating are not candidates for this technology today, but these devices will likely move to variable speed drive and variable speed heat pump based systems in the future [4]. Variable speed systems use the same sort of switching power supply making these more advanced and efficient systems candidates for the proposed technology. Due

Manuscript received October 31, 2013. This work was supported by the California Energy Commission's Public Interest Energy Research (PIER) Program under Grant Number 500-10-052 and the Assistant Secretary for Energy Efficiency and Renewable Energy, Building Technologies Program, of the U.S. Department of Energy, under Contract No. DE-AC02-05CH11231 *Asterisk indicates corresponding author.*

A. R. Weber, A. L. Liao, A. K. Meier, and S. Lanzisera* are with the Environmental Energy Technologies Division, Lawrence Berkeley National Laboratory, Berkeley, CA 94720 USA (e-mail: smlanzisera@lbl.gov).

D. Pajak is with the Embedded Segment group, ARM, San Jose, CA 95134 USA.

to the extremely low-cost and ease of integration with existing technology, energy awareness is a clear application that can help drive the adoption of IoT concepts across many device types.

This paper introduces the communicating power supply and presents an example implementation of a CPS ecosystem. In Section II we discuss the overall concept. Section III contains a survey of related work on energy aware devices as well as on communicating energy information on local area networks and the Internet. Section IV contains a detailed review of our proof of concept demonstration and sample applications. In Section V we provide a perspective on the widespread deployment of this technology from a consumer, energy policy, and energy efficiency standpoint.

II. System Concept

Reducing the energy use of plug loads becomes increasingly important as the number of electronic devices grows and as the end uses in buildings become more efficient. However, today's solutions for saving energy either are based on long term energy policy methods or on transitional technologies that do not perform as consumers expect or desire. Reducing the energy use of plug loads has been most effective through voluntary energy efficiency programs like the U.S. EPA's Energy Star program or via mandatory national energy efficiency standards. Unfortunately these processes have trouble keeping pace with the rapid advance of technology. Despite this challenge significant energy has been saved through these programs [5].

Recently, a new type of power control for plug loads has entered the market. These commercially available products for monitoring and controlling miscellaneous electronics are installed in between the device and the plug. This plug through approach has the advantage of flexibility with regards to the devices monitored and/or controlled. One major downside to this approach is the loss of native controls such as remotes, switches, or other interfaces. For example, if one of these devices is installed in between a lamp and a plug, the actual lamp switch must always be turned 'on' in order for the relay in the outlet control to function. This approach replaces the native interface, with whatever interface is associated with the control device -- something that may not always be desired by the user. Users expect devices to retain their native user interface, and keeping track of which control method is currently active leads to frustration and rejection of the control technology [6]. A second drawback is that the plug-through devices are not permanently assigned to a specific device making the identity of the device being metered and controlled open to question.

Our CPS concept measures the energy use of the device it is powering, reports the energy use and device's identity over a network to a central entity, and receives control information from users or other devices via the same central entity. At the same time, the user is still able to control power state directly using legacy interfaces on the product so that the existing, native controls are retained. This concept is shown in Fig. 1 where three electronic devices are powered by communicating power supplies. The power supplies convert the mains AC power to the DC power used by the device, measure energy use, and report these data to a local or cloud based web service. The web service aggregates this information, receives network-based control requests from users or energy management applications, and passes control information back to the CPS devices. The CPS devices pass these controls along to the device of interest, and the devices change power state accordingly. The device remains connected to power the entire time and all native controls on the device continue to function. Energy data are reported at regular intervals or as requested by the central entity.

The key difference between CPS technology and existing solutions are as follows:

- The CPS is integrated into the power supply (either internal or external to the device), has knowledge of the unique device and device type under control, and is sold as part of the product rather than as an aftermarket add-on. This enables higher market penetration.
- The high level of integration reduces the cost of monitoring and control to levels far below those possible with aftermarket, add-on devices.

- The CPS allows devices to retain all of their native controls and local user interfaces and do not require users to adapt to multiple, conflicting types of control.

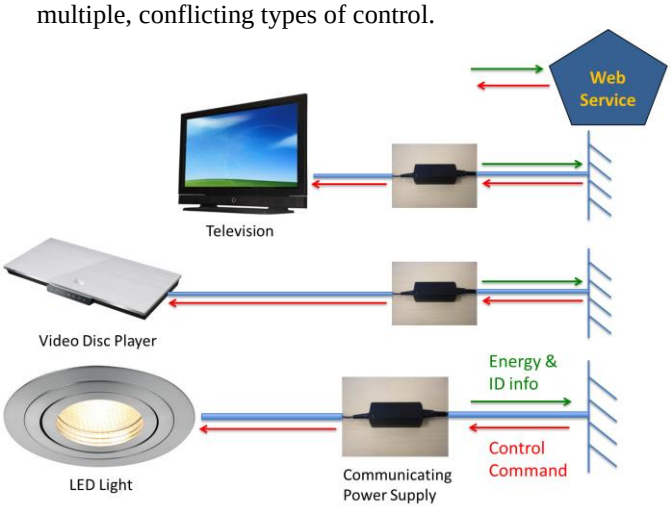

Fig. 1. System concept showing three devices with communicating power supplies that report energy data to a web service and pass control information directly to the device.

III. Related Work

Measuring and controlling the energy use of devices has seen a great deal of attention in recent years, and there has been activity in the academic literature, the consumer market, and among standards organizations. In this section we review existing solutions for measuring and reporting the energy use of devices over a network.

A. Energy Aware Consumer Products

There are three categories of existing systems for reporting energy of plug load devices over the Internet: large smart home appliances; plug level energy monitors; and nonintrusive load monitoring (NILM). In addition, there is "middleware" that facilitates network communication from the plug load energy monitor to the central entity.

Major appliance manufacturers [7-9] offer product lines of smart home appliances that can be connected to Wi-Fi and can be monitored and controlled from a computer or mobile device. These are mostly large appliances, such as washers, dryers, refrigerators, and dishwashers. The appliances are high-end models in terms of cost and possess features that may not be desired or needed by a homeowner who is only interested in the addition of energy reporting capabilities.

Plug level energy monitors [10-12] offer monitoring and control capabilities at the wall outlet, as an independent power-strip, or at the circuit breaker panel. These relatively expensive plug adapters are used to monitor each end use device, and many brands are commercially available. The devices typically communicate over a wireless network and a user dashboard is provided on a computer or mobile device. It costs about $50 per end use for plug level adapters and could be more than $1000 to monitor the important devices in a single home when including gateway hardware and control software. In addition to high initial cost, these devices have several important drawbacks. First, they must be individually installed and programmed. If the device is moved, or additional devices are plugged in, then the identification and control aspects are lost. Second, many of the products rely on proprietary communication protocols, which leads to incompatibilities and legacy networks. Thus, they are adequate for short-term or limited operation but not suited for a permanent, scalable, system.

An alternative to plug level energy monitors are nonintrusive load monitoring (NILM) systems. NILM systems consist of one energy meter to monitor whole house energy consumption and use signal processing to disaggregate the individual end use loads. Multiple groups have published algorithms to optimize the disaggregation analysis [13-20]. This technique is still largely a research effort, with groups investigating various techniques to disaggregate end use loads via methods such as machine learning. There are currently no commercially available products on the market. This technique works well for large (over 150 Watt) loads that operate in discrete levels (e.g., on/off, high/medium/low) but does not work as well for low powered loads or loads with large number of variable states, such as the dishwasher or electric stove. For nonintrusive monitoring, electric loads should be physically present within a residence and must vary in energy consumption. For example, the energy consumption of an electric stove not consuming electricity or permanently ON will not be recognized as any load must change power consumption within the monitoring period of time to be identified. Loads must also change power consumption in discrete levels. Continuously varying loads like dimmer switches on lights or adjustable speed drives on motors may not be suitable for monitoring without implementing rather expensive feature detectors. Multiple sources of inaccuracy arise from heterogeneity in meters, load profiles, and appliance types (category, make, size, and manufacturer). Low power consumer appliances, such as miscellaneous electronics (MELS), exhibit similar power consumption characteristics making the recognition task even more challenging. NILM still does not achieve the same level of accuracy as direct metering at the end use.

A research effort that complements device level energy monitoring is open source "middleware" [21]. These are software and hardware infrastructure that facilitate communication between the end use monitor and the central entity. The embedded

systems are programmed to gather data from the energy monitor and communicate this information over the network layer to the data server. A user dashboard would be located on a mobile device or PC, which allows control and monitoring via the data server. Together, the communicating power supply and middleware would both be necessary to implement the complete energy reporting system.

B. Protocols for Energy Reporting and Control

Protocols or formats for energy reporting have proliferated in recent years. Some are meant for local area network use like the Zigbee Smart Energy Profile (SEP) whereas others are largely intended for use over the Internet (e.g., GreenButton and OpenADR 2.0b). The former category protocols are nominally designed to operate with low-power wireless devices that support small packets sizes, and the later protocols prize human readability over compactness. The type of network connection used may limit the selection of reporting protocol. The CPS system is primarily concerned with transferring data inside a local area network (LAN), and it makes sense that at least some devices will have simple, low-power networking capabilities rather than more capable WiFi or Ethernet connections. There is no reason, however, that all CPS devices need to use the same network interface or even the same data format for transmission. The CPS ecosystem can accommodate both broadband and lower-speed connections between the devices and the network. This section provides a brief overview of some popular and emerging standards for sharing energy data to highlight the advantages and disadvantages for energy reporting.

Zigbee SEP version 1.x and 2.0 are intended for low-power devices using IEEE 802.15.4 radios. SEP 2.0 can be used over other network links that support IPv6 in addition to IEEE 802.15.4 links. SEP 1.x was optimized for the very short packet lengths available in the 802.15.4 standard, but there are a variety of interoperability problems with the 1.x versions. SEP 2.0 was designed to operate over IPv6 using an HTTP interface, and this makes the use of 802.15.4 more challenging due to the short packet lengths, long latencies, and the complexity of packet segmentation.

OpenADR 2.0b and GreenButton Connect are XML standards for exchanging energy data between utilities, consumers, and third party energy service providers. Unlike Zigbee SEP, they were designed to pass over high-bandwidth network connections, and typical file sizes are measured in tens of kilobytes. This makes passing data in this format very difficult using low-power networks. It is likely that these standards will continue to see use in their respective application areas, but they are not likely to be useful for LAN communication using resource constrained devices.

The Internet Engineering Task Force (IETF) Energy Management (eman) working group is developing a framework [22] for energy management of devices and device components within or connected to communication networks that is based on Simple Network Management Protocol (SNMP). The devices can then be monitored and controlled if the appropriate management information base (MIB) is used for interacting with the device. The framework primarily addresses energy object identification and monitoring of the energy state of the object. Although typically more compact than XML based schemas, SNMP is still not as compact as a binary representation of information. This limits the applicability of the eman approach to constrained network devices. The Consumer Electronics Association (CEA) and the Electric Power Research Institute (EPRI) announced a new standard [23] that defines a modular communications interface (MCI) for appliances based on the USNAP concept. The standard specifies "details of the mechanical, electrical, and logical characteristics of a socket interface that allows communication devices", defined as universal communication modules (UCMs), "to be separated from end devices" such as smart meters, communication nodes and other smart grid devices. This is an emerging standard, but the interface to the MCI is a simple serial interface and the networking is handled by the MCI. Although this is attractive for low-cost devices, use of an MCI requires a relatively expensive add-on for network access, and this limits the ability of a CPS to participate in network activities. There is no specific energy reporting standard or scheme for MCI at this time, but other standards and protocols can be supported by specific MCIs. USNAP also has implicit mechanical standards which limit miniaturization and cost reductions.

IV. Proof-of-Concept Demonstration

The communicating power supplies allow unobtrusive power monitoring and control. To illustrate the CPS concept, we rapidly prototyped a network connected, CPS and implemented the technology with three standard electronic devices. In this section we explain the principles of operation, the software and hardware implementation, and example energy saving applications.

A. Principles of Operation

The CPS consists of a series of components. First there is the power supply which efficiently converts the incoming AC power to DC power. We add components that enable us to measure the power converted by the power supply, and we use a microprocessor to manage these measurements and handle the networking aspects of communication. An RF transceiver handles the physical aspect of communication.

AC to DC switching power supplies switch the input current through a magnetic device at high speed in order to maintain a stable output voltage while efficiently converting input power to output power. Power supplies modulate the duty cycle of the switching to control the current in the magnetic element, and this controls the available power at the output. They use the output voltage and/or current as feedback signals to the controller so that the correct duty cycle can be used to maintain the output within a set of specifications. Modern power supplies must do this at high efficiency even at low output powers, and they must consume virtually no power in the no load condition. In order for this to be possible, power supplies modulate both the duty cycle and the frequency of the switching to minimize wasted energy and maximize overall performance [24]. The duty cycle can be used as a proxy for the power passing through the supply for a given input voltage. Fig. 2 shows a simplified schematic of a

CPS without the feedback shown and with added components and connections shaded. Fig. 3 shows sample outputs (logically inverted) from the switching node on the power supply. The controller output that controls the switching action of the power supply is low-pass filtered and digitized by a microcontroller. The microcontroller also measures the value of the input voltage. These two values are applied to a lookup table with interpolation to map duty cycle and voltage to a power level. Fig. 4 shows an example calibration curve with measured duty cycle on the independent axis and input power to the supply on the y-axis for a fixed input voltage. There is a clear one-to-one mapping between duty cycle and input power, but the curve is piecewise linear. This occurs because at higher power outputs the frequency is at the maximum value with only duty cycle changing. This represents the continuous conduction portion of the power supply operation whereas the rest of the operational range has increased efficiency due to discontinuous current in the transformer. Fig. 5 shows how the duty cycle output changes over differing input voltage. It is important to measure input voltage mostly to determine system operating voltage (e.g., 100V, 120V, or 220V) rather than the exact voltage value due to the low slope of these curves, but accounting for voltage is nonetheless important.

The wireless networking we perform is simple yet robust under the circumstances of our demonstration. We reviewed existing networking stacks available and found that they were not easy to port to our prototyping platform or had reliability issues in environments with heavy levels of spectral congestion. We opted for a simple, frequency-agile, star network. The entire network communicates with a central hub at regular intervals and changes carrier frequency when communication becomes unreliable. Nodes search for the carrier frequency currently in use if communication is broken.

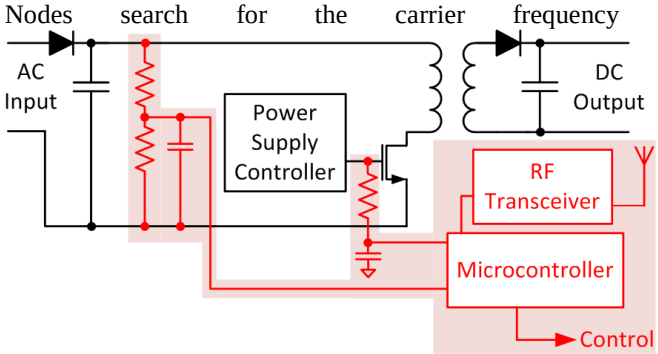

Fig. 2. Simplified schematic of a communicating power supply where shaded components are added for a complete CPS and unshaded components are part of the original power supply design.

B. Hardware Implementation

The purpose of our demonstration was twofold: to demonstrate the CPS concept and to highlight the advantages of rapid prototyping as it relates to the IoT. We selected off-the-shelf hardware that had open-source software libraries available when possible. The only system components that were specially prepared were the power supply modules and the circuit boards that contained various interface components. The power supplies were built by Power Integrations, a company that designs power supply controller chips, and these power supplies had the switching output and input voltage available as extra wires fed out of the power supply. These changes add almost nothing to the cost of the power supply because the signals are available outside the controller chip already. We selected ARM® mbed™ for development, and used the NXP LPC1768 microcontroller board. The processor is more than capable for this project - and selected as the complexity of networking and application is considered too much to be implemented on an 8-bit device as efficiently. ARM mbed also employs software abstraction that allows us to target other ARM Cortex®-based platforms with the same code. This will enable easy migration to cost reduced parts for production should this be necessary. The mbed community also has extensive software libraries, and we leveraged these libraries to minimize development time. The Nordic nRF21L01 transceiver we selected has a well-developed publicly available library in the mbed community, which we used as the basis for our network. We designed a printed circuit board that contained the associated interface components so that our microcontroller could read values from the power supply and provide control inputs to the connected devices. A photograph of a single prototype communicating power supply including the power supply, the processor module, the radio module, and ancillary components is shown in Fig. 6, and this fully implements Fig 2. Wires run from the CPS to the device under control so that the device natively carries out power commands issued by the CPS.

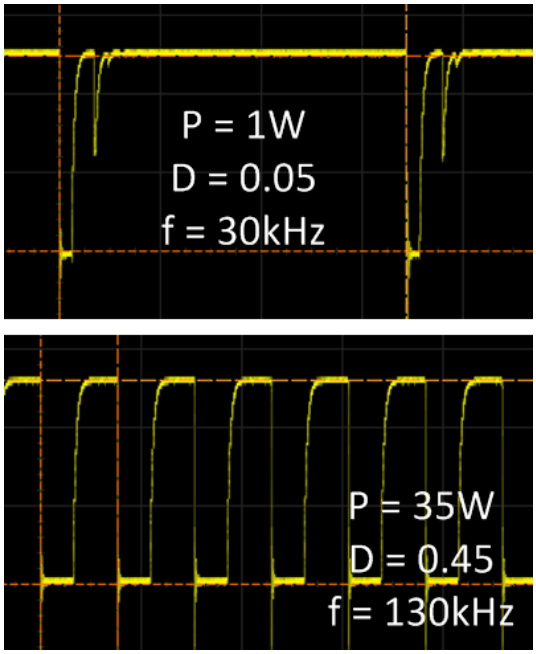

Fig. 3. Oscilloscope traces of logically inverted power supply switching signals for two load conditions showing how duty cycle and frequency change with load power.

Providing control to the connected products required basic understanding of the product's existing user interface. Device on-off operation is often controlled via a button press (such as a TV power button). The CPS emulated button presses using a MOSFET transistor in parallel with the user controlled switch. In the case where an analog signal for control was needed, we used a digital-to-analog converter on the microcontroller and an op-amp to drive the required signal. When fully integrated into the product, integrating with the existing interface is easily accomplished as part of the design process.

The overall hardware design occurred rapidly. We bread boarded the components and tested for functionality. We immediately designed a circuit board that contained the appropriate connections and had it fabricated. Within two weeks we had our final hardware platform which was robust enough for days of operation on a trade show floor.

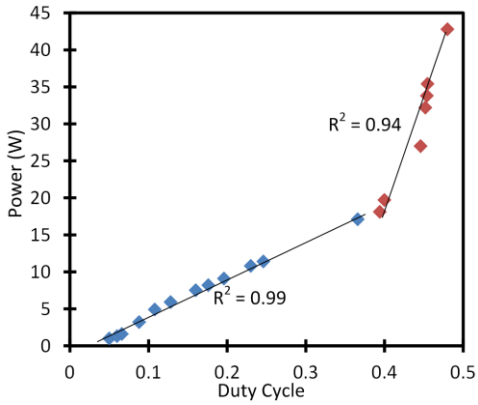

Fig. 4. Example calibration curve for a fixed input voltage mapping duty cycle to power.

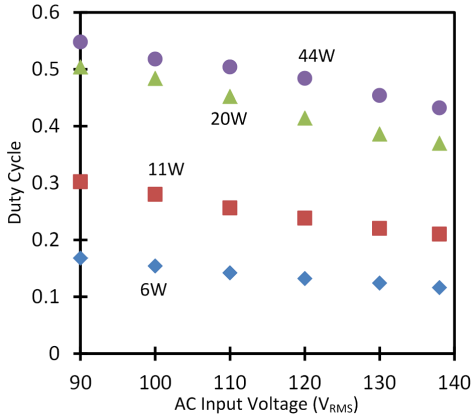

Fig. 5. Example calibration curve showing the effect of varying input voltage on duty cycle.

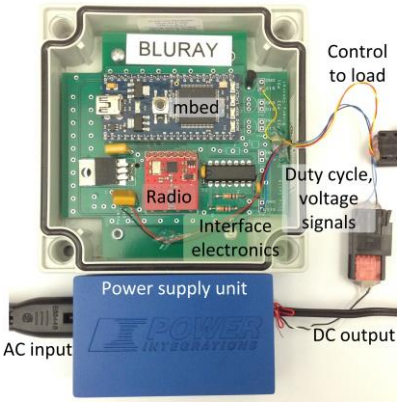

Fig. 6. Photograph of a prototype communicating power supply. In Fig. 2. the microcontroller is the ARM mbed and the unshaded components make up the power supply unit. Wired connections between sub-units also shown.

C. System Demonstration Architecture

We implemented our CPS technology in an LED lamp, Blu-ray player, and a television (TV). The lamp, Blu-ray player, and TV were power monitored in real time, and the resulting data were uploaded to the Internet immediately after measurement. The energy use information was displayed on a cloud-based dashboard which also allowed a user to control each device. The user dashboard provides intuitive energy-use information and control of each connected device. Each device also retained the use of its native control interface (e.g. remote for the TV and Blu-ray, and dimmer switch for the LED lamp), allowing the user to seamless switch between web-based and direct-device controls.

Fig. 7 shows an overview of the system used in the demonstration. The mbed devices with radios served as the brains of the communicating power supply and as the network hub. The hub connected to a local server implemented on a Raspberry Pi, an ARM based embedded Linux computer, and this server handled interactions with our web service running in the cloud. This section details the functions and interactions of each of these system components.

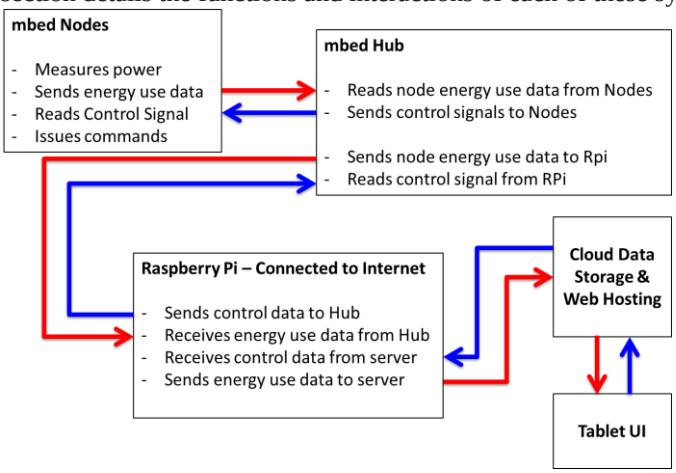

Fig. 7. Functional diagram showing components and communication links of demonstration system. There are multiple mbed nodes and one hub in the network.

The mbed-based nodes are integrated with the power supplies of the Blu-ray player, TV, and lamp. Each node measures the device's power consumption and sends that information to the control entity. This information also allows the device's power-state to be inferred by the server. In addition, these nodes receive inputs from the control hub and relay those signals to the devices. All communication between the nodes and the hub was wireless. The network hub was also an mbed-based device that controlled network traffic. The hub receives energy-use information from the nodes and sends control information to the communicating power supplies integrated with the devices. A process on both the hub and the nodes ensures that all CPSs are active and connected to the network. If a network interrupt is detected, the hub signals all nodes to change wireless frequencies. The hub relays the node energy-consumption information and cloud-based controls between to the local server and the CPS devices.

The local server served as the Internet gateway for the local network hub device. It is not technically necessary for the local server to be a component in this configuration. It is possible to connect the mbed to the Internet and, in turn, make each component in this system based primarily on the mbed platform. However, because of the ease with which Linux could be configured to communicate with both the mbed hub and the Internet based data reporting system, it was included in our demonstration for the sake of simplicity, in keeping with our rapid prototyping approach. Its inclusion also illustrates how multiple rapid prototyping platforms can easily be configured to communicate over common interfaces.

We adopted a cloud-based data storage and web hosting solution [25] where our data were uploaded and archived. The server archives energy consumption data and allows the user to access and display these data. This same server sends the control signals

to the local server. The server can be configured to send controls automatically, only send controls based on direct user inputs, or some combination of the two. Fig. 8 shows the tablet computer display with power traces of the three devices and the control interfaces.

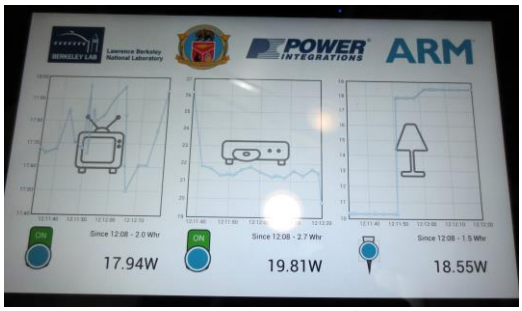

Fig. 8. Photograph of the tablet screen showing real-time power values and control options for the devices using a CPS.

We used a tablet computer to interact with the cloud-based server and allow the user to view energy use information, and control the devices via the Internet. This system shows power consumption (real time and cumulative) for each device and allowed people to control each of the devices with touch buttons and observe the changes in power on the screen.

Our rapid prototyping approach allowed us to go from concept to working prototype in approximately three weeks with only two employees and low hardware and development-related expenses. This represents significant gains when compared to the typical prototyping timeline, and it allows for creativity and revision during development as unanticipated problems arise.

D. Energy Saving Applications and Behaviors

Using readily available hardware and a minimum of software development, we demonstrated the potential of unobtrusive load monitoring and control in a communicating power supply. Our demonstration scratched the surface in terms of intelligent device behaviors that could be implemented with this type of setup. Our server detected when the user had turned off the TV (using either the tablet, or remote) and sent a control signal to the Blu-ray player to turn it off, as well. In addition, when the Blu-ray player was turned on, the server sent a control signal to the TV to switch it on.

These behaviors add value for the user, and present energy-savings opportunities without introducing inconvenience. Networks of CPSs could be built incrementally, with opportunities for intelligent behaviors, and corresponding energy savings increasing as the network grows. The largest opportunities for both increased energy-efficiency and user benefits can be found in the ability of these devices to respond to one another, or to other measurement and control devices such as smart thermostats.

E. Comparison to related work

The primary advantages of the CPS concept over related work is that the CPS is a commodity device that is sold as part of the products of interest. This commoditization results in low costs, market scalability, and the ability to be deployed widely. The tight coupling between the CPS and the product means that all configurations can be done in the factory, removing some of the complexity related to configuration for end users.

The ability to use native controls in addition to the dashboard interface is one distinguishing feature of the communicating power supply. The hardware represents only an *additional* layer of functionality instead of a replacement for the controls with which the user is familiar. Our integrated solution complements the controls with which the user is already familiar while adding a seamless additional layer of energy reporting and internet connectivity. When the device (e.g., TV) is plugged in, our hardware is immediately functional with no additional configuration necessary. This approach removes the burden of choosing between native and remote controls. The user can also choose to utilize only the energy monitoring capabilities of the system without using web-based controls if they desire.

Because the CPS is part of the product, the identity of the product (both product type and unique identity) can be configured in the CPS at the factory. This ensures that devices and their available behaviors can be shared with building energy management and automation systems without the user manually configuring the device type and identity for every device of interest. The identity will stay with the product even if the product moves because the power supply is a part of the device. Even external power supplies are rarely used with devices other than the one intended.

By integrating the monitoring and control hardware into the device, consumers face a low burden when adopting devices that can monitor and control miscellaneous devices and electronics. Adding power measurement capability if a microprocessor is already available is as simple as adding a few passive components (see Fig. 2) for a total price increase of less than USD $0.10. Adding a simple microprocessor and control capability in the power supply is approximately USD $0.15. Adding networking depends on the network stack chosen and can be free when using an existing network connection. A low-cost IEEE 802.15.4 radio costs about $1 including the radio chip and passives, and other network technologies tend to cost somewhat more. Integrating this hardware into pre-existing devices is inherently more cost effective than currently-available products installed in between the plug and the device. Integrated hardware is an important step to changing this technology from something used on the small scale by highly-motivated, energy-conscious hobbyists, to wider adoption by the average consumer.

V. Policy and Energy Implications

The CPS enables both energy savings as well as improved energy policy. The CPS is able to report energy, power state, and unique identity to a central entity so that energy service providers or consumers can be made aware of device state and energy use. Informing services and people about energy use helps, but if the services are able to provide actionable information to people or issue controls back to the devices, significant energy savings is possible. The CEA estimates that many electronic devices are left on and in an unused idle mode at least as often as they are on and providing a useful service [23]. Today most devices have very low sleep power, so almost all of the energy is used in the on or idle state. Therefore a fraction close to 50% of the total energy used by products is wasted while the device is in the idle (unused) state. CPS technology has the potential to reduce this wasted energy without impacting the services provided to consumers. Plug load research in commercial buildings suggest that simple timer based control of currently non-networked plug loads would save 6% of commercial building energy use [26]. More advanced control options would be possible with CPS, and it is likely that the widespread deployment of CPS technology has an energy savings potential of 5% to 10% of total building sector energy use.

If new devices were able to report energy use to a central entity, entirely new policy options would be possible. Currently policy makers develop an energy test procedure that tries to mimic real world conditions so that the energy use of a product can be compared to the energy use of similar products. There is no way to be sure the test procedure is a fair comparison or that it represents reality. CPS technology would allow low-cost field verification of comparative energy performance of devices as well as provide concrete data by which to develop test procedures. Enrolling devices in a study on energy use would be as simple as recruiting a consumer and setting some software settings rather than specifically installing and maintaining equipment at consumer sites. In-the-field validation of test procedures and policy actions is extremely valuable, but the cost of such studies is high. The CPS technology can reduce these costs dramatically, and these studies will drive higher levels of energy efficiency in products.

VI. Conclusion

We presented an Internet connected system of communicating power supplies that enables improved energy awareness of devices and users. We believe that CPS technology is the future of energy monitoring for plug loads, and that all energy using devices will one day be aware of their identity and share energy information over IP networks. The CPS concept we have shown here demonstrates that this concept is valid at reasonable price points even for quite low-cost devices. Energy awareness enables new sets of interactive energy saving behaviors where devices control their power state to meet user needs while minimizing energy use. Unlike existing technologies, CPS devices are integrated into the product to provide native controls and automatically include product identity information. The low-cost, reduced configuration burden, and tight coupling with the powered product make CPSs an excellent application of IoT concepts.

Acknowledgment

The authors would like to thank Daniel Wright and Andrew Moore of ARM, and Peter Vaughn and Richard Fassler of Power Integrations.

References

[1] S. Lanzisera, S. Dawson-Haggerty, H. Y. I. Cheung, J. Taneja, D. Culler, and R. Brown, "Methods for detailed energy data collection of miscellaneous and electronic loads in a commercial office building," *Building and Environment*, vol. 65, pp. 170-177, 2013.

[2] R. S. Srinivasan, J. Lakshmanan, E. Santosa, and D. Srivastav, "Plug-load densities for energy analysis: K-12 schools," *Energy and Buildings*, vol. 43, pp. 3289-3294, 2011.

[3] O. Comstock and K. Jarzomski, "Consumption and Saturation Trends of Residential Miscellaneous End-Use Loads," in *2012 ACEEE Summer Study on Energy Efficiency in Buildings*, Pacific Grove, CA, USA.

[4] C. Marnay, S. Lanzisera, M. Stadler, and J. Lai, "Building scale DC microgrids," presented at the IEEE Energytech, 2012.

[5] "ENERGY STAR and Other Climate Protection Partnerships," US EPA, 2011.

[6] S. Katipamula, R. M. Underhill, J. K. Goddard, D. Taasevigen, M. A. Piette, J. Granderson, *et al.*, "Small- and Medium-Sized Commercial Building Monitoring and Controls Needs: A Scoping Study," PNNL, 2012.

[7] *Whirlpool Smart Appliances*. Available: http://www.whirlpool.com/smart-appliances/

[8] *GE Smart Appliances*. Available: http://www.geappliances.com/connected-home-smart-appliances/

[9] *Samsung Home Appliances*. Available: http://www.samsung.com/us/home-appliances/

[10] *m-Power*. Available: http://www.ubnt.com/mfi - m-Power

[11] *MeterPlug*. Available: http://meterplug.com/

[12] *Packet Power*. Available: http://www.packetpower.com/products/general-power-monitoring/

[13] C. Beckel, W. Kleiminger, T. Staake, and S. Santini, "Improving device-level electricity consumption breakdowns in private households using ON/OFF events," *ACM SIGBED Review*, vol. 9, pp. 32-38, 2012.

[14] A. Marchiori and Q. Han, "Using circuit-level power measurements in household energy management systems," in *BuildSys '09 Embedded Sensing Systems for Energy-Efficiency in Buildings, Proc. of the First ACM Workshop*, New York, NY, USA, 2009, pp. 7-12.

[15] M. Figueiredo, A. de Almeida, and B. Ribeiro, "Home electrical signal disaggregation for non-intrusive load monitoring (NILM) systems," *Neurocomputing*, vol. 96, pp. 66-73, 11/1/ 2012.

[16] C. Hsueh-Hsien, L. Ching-Lung, and Y. Hong-Tzer, "Load recognition for different loads with the same real power and reactive power in a non-intrusive load-monitoring system," in *Computer Supported Cooperative Work in Design, 2008. CSCWD 2008. 12th International Conference on*, 2008, pp. 1122-1127.
[17] L. K. Norford and S. B. Leeb, "Non-intrusive electrical load monitoring in commercial buildings based on steady-state and transient load-detection algorithms," *Energy and Buildings*, vol. 24, pp. 51-64, // 1996.
[18] M. L. Marceau and R. Zmeureanu, "Nonintrusive load disaggregation computer program to estimate the energy consumption of major end uses in residential buildings," *Energy Conversion and Management*, vol. 41, pp. 1389-1403, 9/1/ 2000.
[19] L. Farinaccio and R. Zmeureanu, "Using a pattern recognition approach to disaggregate the total electricity consumption in a house into the major end-uses," *Energy and Buildings*, vol. 30, pp. 245-259, 8// 1999.
[20] A. Zoha, A. Gluhak, M. A. Imran, and S. Rajasegarar, "Non-intrusive load monitoring approaches for disaggregated energy sensing: a survey," *Sensors (Basel)*, vol. 12, pp. 16838-66, 2012.
[21] M. Jahn, M. Jentsch, C. Prause, F. Pramudianto, A. Al-Akkad, and R. Reiners, "The Energy Aware Smart Home," in *Future Information Technology (FutureTech), 2010 5th International Conference on*, Busan, 2010, pp. 1-8.
[22] *IETF eman framework*. Available: http://datatracker.ietf.org/doc/draft-ietf-eman-framework/
[23] CEA, "Modular Communications Interface for Energy Management," vol. ANSI/CEA-2045, ed, 2013.
[24] X. Jinwen, A. V. Peterchev, Z. Jianhui, and S. R. Sanders, "A 4-/spl mu/a quiescent-current dual-mode digitally controlled buck converter IC for cellular phone applications," *IEEE Journal of Solid-State Circuits*, vol. 39, pp. 2342-2348, 2004 2004.
[25] S. Dawson-Haggerty, X. Jiang, G. Tolle, J. Ortiz, and D. Culler, "sMAP: a simple measurement and actuation profile for physical information," presented at the Proceedings of the 8th ACM Conference on Embedded Networked Sensor Systems, New York, NY, USA, 2010.
[26] B. Acker, C. Duarte, and K. V. D. Wymelenberg, "Office Space Plug Load Profiles and Energy Saving Interventions " presented at the 2012 ACEEE Summer Study on Energy Efficiency in Buildings, Pacific Grove, CA.

Steven Lanzisera (S'02, M'09) received the Ph.D. degree in electrical engineering and computer sciences from the University of California, Berkeley in 2009. He was a test engineer with the Space Physics Research Laboratory from 1999 to 2002. At Berkeley he studied low-energy, networked technologies including the design of radios, communication protocols, and embedded systems. In 2009 he joined Lawrence Berkeley National Laboratory, Berkeley, CA where he is Research Scientist and Principal Investigator of Applied Energy Sciences. His primary research areas involve new sensors and systems for the monitoring and control of energy using devices in buildings using new information technologies.

Andrew R. Weber received the B.A. degree from Carleton College in 2009. Since 2009, he has worked as a Research Associate for Lawrence Berkeley National Laboratory. He studies data center efficiency, building energy monitoring and control, and energy efficient government procurement.

Anna Liao received the B.S. degree in electrical engineering and computer sciences from the University of California, Berkeley in 2003 and the M.S. degree in robotics from Carnegie Mellon University, Pittsburgh, PA in 2006. From 2007 to 2011, she was a Microdevices Engineer at NASA Jet Propulsion Laboratory. Since 2011, she has been a Scientific Engineering Associate at Lawrence Berkeley National Laboratory. Her research interests involve networked sensor systems for monitoring and control of energy use in buildings.

Dominic Pajak received the Ph.D. degree in Computer Science from the University of Leeds, United Kingdom in 2005. He works at ARM Inc., San Jose, California where is he focused on Internet of Things applications. He joined ARM in 2002 as an engineer in their Cambridge CPU group. He later took the ARM Cortex-M0 processor from concept to launch, a processor which has seen wide industry adoption in low-power 32-bit microcontrollers and smart sensor applications.

Alan K. Meier received the Ph.D. degree in Energy and Resources from the University of California, Berkeley. He is a Senior Scientist at Lawrence Berkeley National Laboratory and a Faculty Researcher at the University of California, Davis. At LBNL he leads the Electronics, Lighting, and Networks Group. At UC Davis, he is co-Director of the Energy Efficiency Center. His research has focused on understanding how people (and machines) transform energy into useful services and the opportunities to conserve energy. His research on standby power use in appliances—1% of global CO2 emissions—led him to propose a widely adopted international plan for 1W standby in all devices. Other research topics include energy use of electronics, energy test procedures, and policies to promote energy efficiency.

APPENDIX B:
Adding Low Cost Internet Connectivity and Control To Your Design

This work was partially funded by California rate payers through California's System Benefit Charges administered by the California Energy Commission under Public Interest Energy Research contract No. 500-10-052

Adding Low-cost Internet Connectivity and Control To Your Design

Steven Lanzisera, Lawrence Berkeley National Laboratory

Chris Styles, ARM

Design West, 23 April 2013

Lawrence Berkeley National Laboratory (LBNL)

Managed by the University of California for the United States Department of Energy

BERKELEY LAB

Lawrence Berkeley National Laboratory

- **Dedicated to solving the most pressing scientific problems facing humankind**
  - Basic science for a secure energy future
  - Science of living systems to improve the environment and energy supply
  - Understanding and control of matter and energy in the universe
  - Translation to applied energy programs
- **Build and safely operate world-class scientific facilities**
- **Train the next generation of scientists and engineers**

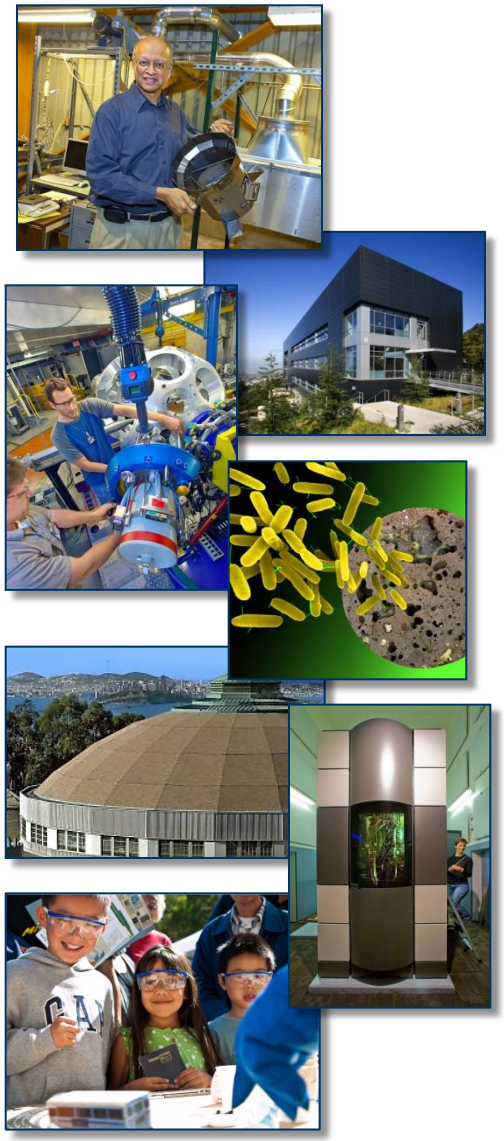

Power Integrations: Developer of High Voltage ICs

- Largest provider of high efficiency AC-DC converter ICs
- First to market with “Zero” No-Load ICs for power adapters
- Major supplier of LED drivers for general lighting
- US public company - NASDAQ: POWI
- HQ in San Jose, California
- Ship rate > 1B units per year

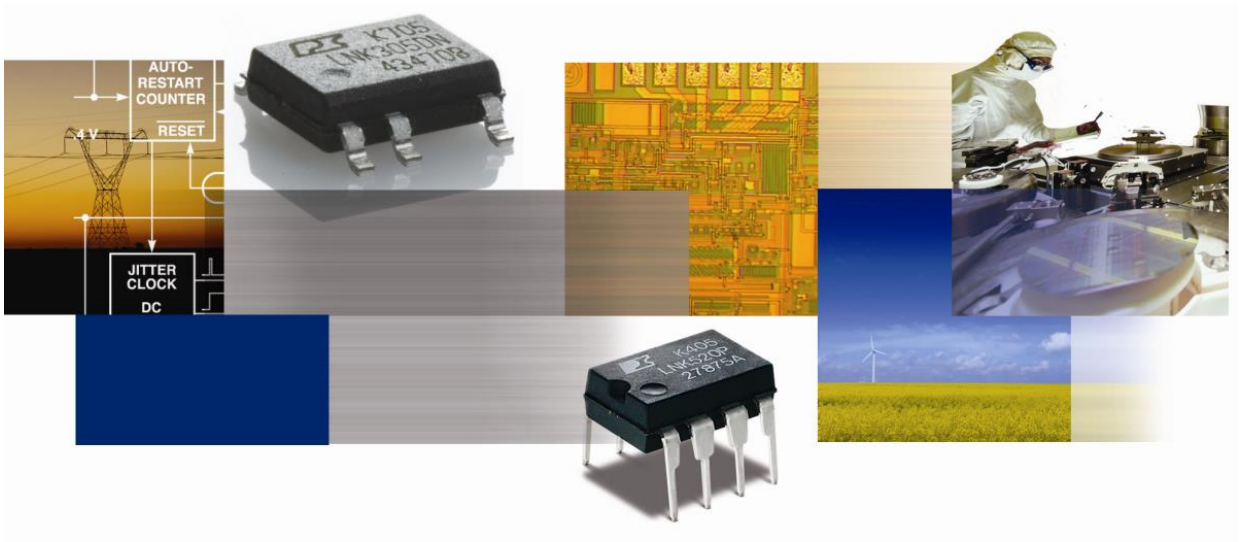

ARM: Developer of processors for embedded systems

- Leading provided of high performance, low power embedded processors
- 3 Billion cores shipped annually
- Leading proponent of the Internet of Things
- Lowest power, lowest cost 32bit microcontroller cores on the market.

Overview

- Background & Application
- mbed: Hardware and software platform
- System development
- Next steps

Overview

- Background & Application
- mbed: Hardware and software platform
- System development
- Next steps

Residential Primary Energy: MELs Growth

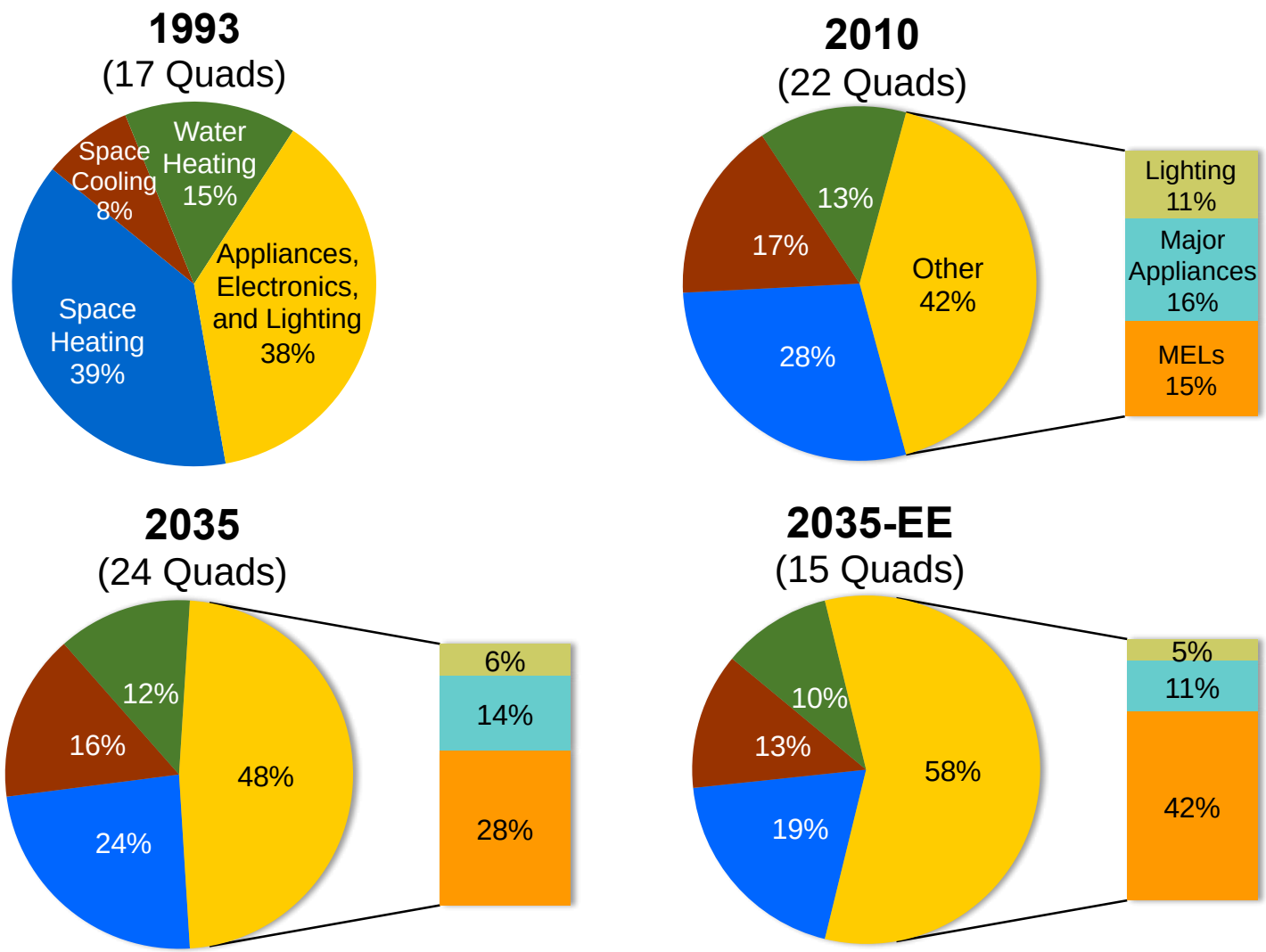

- Appliances, Electronics, and Lighting expected to grow to half of residential primary energy
- 2035-EE Scenario: 10% savings in MELs, 50% in everything else; only about 1/3 overall savings

Sources: 1993 RECS, 2011 Building Energy Data Book (AEO 2012)

What is the yellow slice?

The Challenge

- How do we reduce energy while maintaining utility?
- Great diversity in energy services, market players, distribution channels, etc.
- Little data on energy performance and usage
- Greater behavioral influence on energy use
- Network connectivity is entering the home through MELs devices but will eventually spread to all equipment in the home: how do we leverage this to save energy?

Demonstration Preview

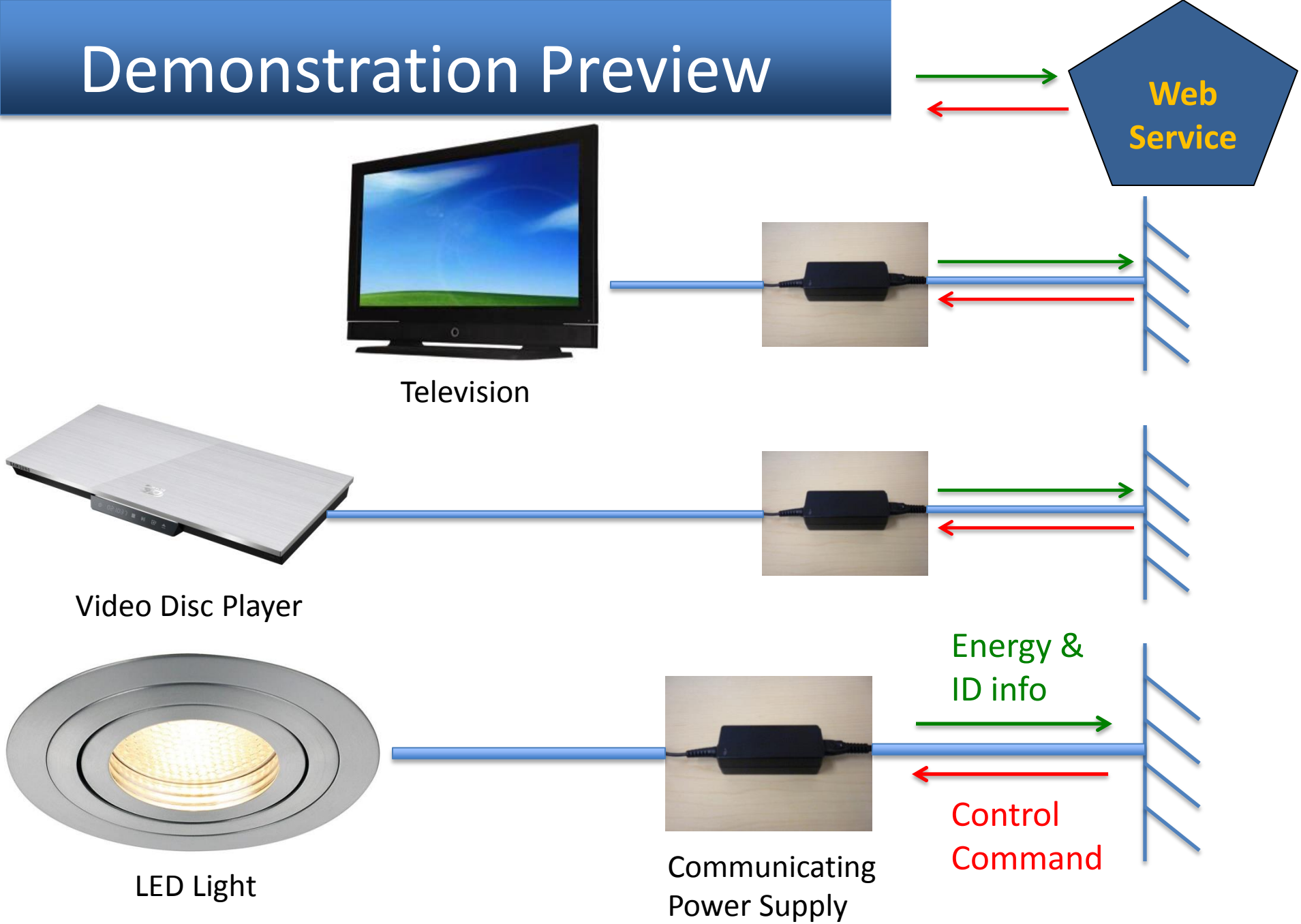

How do you build such a system?

- Select a microcontroller, radio, etc.
- Design a custom board
  - Iterate because it won't power up/program
- Learn about dozens of registers to configure the µC
- Over several weeks, slowly build an application creating custom drivers for everything
- End up just squeezing your application into the µC

- **What if you want to rapidly prototype?**

Overview

- Background & Application
- mbed: Hardware and software platform
- System development
- Next steps

What's happening in Microcontrollers?

- Microcontrollers are getting cheap
  - 32-bit ARM Cortex-M0+ Microcontrollers < $0.50

- Microcontrollers are getting powerful
  - Lots of processing, memory, I/O in one package

- Microcontrollers are getting interactive
  - Internet connectivity, new sensors and actuators

- Creates new opportunities for microcontrollers

Opportunities for Microcontrollers

- Before the 1980's computers were used and applied by computer scientists

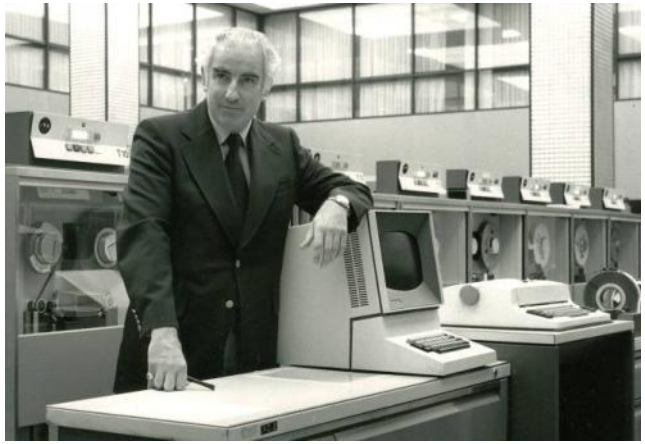

- Now democratised for everyone to use
  - Office, home, entertainment, leisure
- Microcontroller technology is currently applied by professional embedded developers
- Microcontrollers interact with "the real world"
  - Sensors, actuators and communication, define their application
  - Their potential is greater than the home computer

Barriers for Microcontrollers

- What prevents microcontrollers from being designed in?
- Conceptually simple things can be hard to prototype
  - I want to send an SMS when my cat comes through the cat flap

- Repetition of choices to make:
  - Microcontroller, Tool chain
  - Dev board, Sensors
  - It's not difficult, but can be tedious and time consuming

- Overhead for starting a new project
  - Fine for a long complex projects
  - A deterrent for quick experiments and tests

Rapid Prototyping

- Rapid Prototyping helps industries create new products
  - Control, communication and interaction increasingly define products
  - Development cycles for microelectronics have not kept pace

3D Moulding

3D Printing

2D/3D Design

Web Frameworks

mbed.org - Rapid Prototyping for MCUs

- Fastest way to get started with ARM microcontrollers
  - Plug ‘n’ Play Hardware, Online Compiler
  - Get setup and run “Hello World!” very quickly
  - Removes entry barriers to MCU technology
- Focused on rapid prototyping for a diverse audience
  - DIP form-factor, High-level APIs, Developer website
  - Technology and tradeoffs to enable fast experiments
  - Platform approach for developer ecosystem
- Launched at ESC Boston with live demo
  - Internet-enabled “Twittering Billy” read out tweets
  - An embedded internet device, prototyped in ½ day
  - Over ¼ million video views in first week!

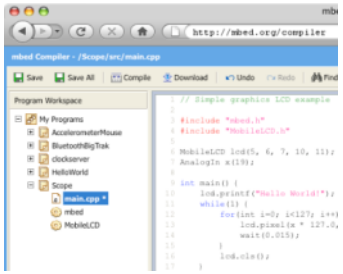

mbed Approach

- Focus on tools supporting the earliest stage of design
  - Point of entry and Getting Started
  - Experimentation and Rapid Prototyping
  - Apply technology and trade-offs that support this goal

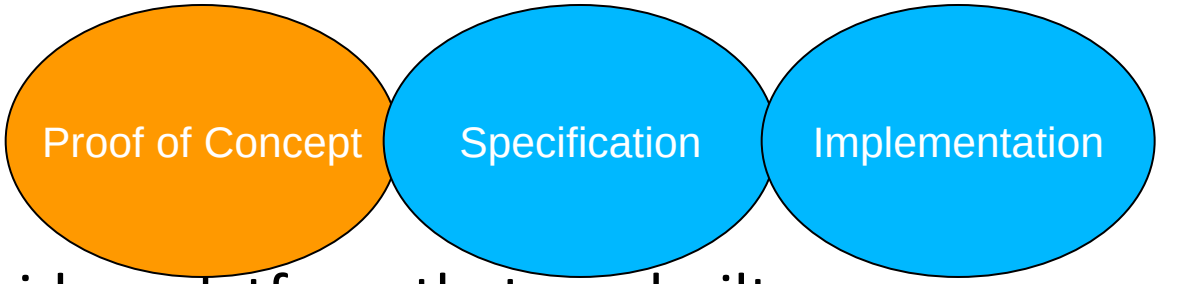

- Provide a platform that can built upon
  - HDK is a “recipe” enabling mbed features in 3rd party designs
  - SDK enables reuse and portability in the developer ecosystem

mbed SDK

- **C/C++ SDK for ARM Microcontrollers**
  - High-level APIs and standard environment
  - Low level control as needed
  - Portable across different ARM silicon vendor MCUs
- **Built on industry standard technology**
  - ANSI/ISO C/C++
  - CMSIS Compliant
  - Compatible with all major professional MCU tools
- **Open Source**
  - Released under permissive Apache 2.0 license
  - Suitable for commercial and non-commercial use
  - Managed, maintained and tested by ARM

mbed HDK

- **HDK for ARM Microcontroller Boards**
  - MCU sub-system and debug interface architecture
  - Includes on-board USB interface with 3 endpoints:
    - Drag-and-drop FLASH programmer, Virtual Serial Port, Debug
  - Enables standard connection on low-cost boards, starter kits, modules
- **Built on industry standard technology**
  - USB Device
  - CMSIS-DAP Debug Interface Protocol
  - Compatible with Windows, Mac, Linux
- **Free for commercial and non-commercial use**
  - Portable across different ARM silicon vendor MCUs
  - Developed, tested and maintained by ARM

mbed HDK On-board Interface

- **On-board USB interface** for low-cost development boards
  - Supports **driverless MSD Programming and CMSIS-DAP Debug**
  - Interface implemented as firmware on selected Cortex-M MCUs

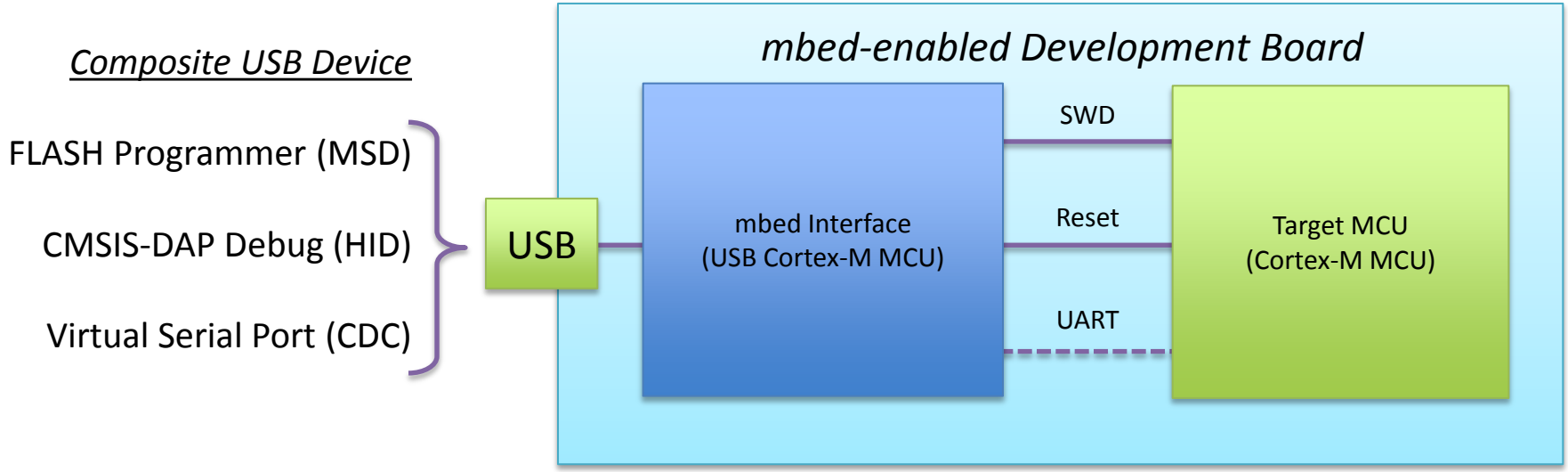

Enables simple USB drag-n-drop reprogramming of demo code through to full debug connection to ARM toolchains

mbed-enabled Hardware

- **Expanding range of off-the-shelf mbed-enabled hardware**
  - ARM Cortex-M0, M0+, M3 all represented; M4 TBA
  - DIP prototyping modules, Arduino eval board form-factors
  - Available through worldwide distribution

$49

$45

$13

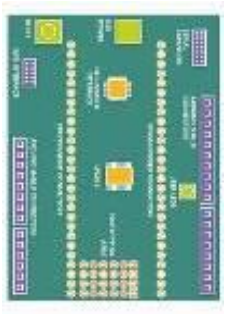

$20

- **Design and production**
  - All boards implement the mbed HDK
  - Hardware is designed and/or made by ARM or 3rd parties
  - mbed HDK enables anyone to build alternate board designs

Current message: mbed.org/explore

Software Development Kit (SDK)

The mbed Software Development Kit (SDK) is an open source C/C++ microcontroller software platform relied upon by tens of thousands of developers to build projects fast. We've worried about creating and testing startup code, C runtime, libraries and peripheral APIs, so you can worry about coding the smarts of your next product.

The SDK is licensed under the permissive Apache 2.0 licence, so you can use it in both commercial and personal projects with confidence.

The mbed SDK has been designed to provide enough hardware abstraction to be intuitive and concise, yet powerful enough to build complex projects. It is built on the low-level ARM CMSIS APIs, allowing you to code down to the metal if needed. In addition to RTOS, USB and Networking libraries, a cookbook of hundreds of reusable peripheral and module libraries have been built on top of the SDK by the mbed Developer Community.

mbed SDK | mbed RTOS

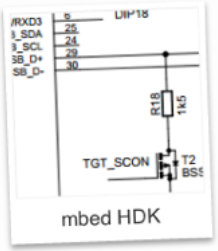

Hardware Development Kit (HDK)

The mbed Hardware Development Kit (HDK) provides full microcontroller sub-system design files and firmware for building development boards and custom products that benefit from the native support of the mbed SDK and free mbed Online Compiler and mbed Developer Platform.

The HDK specifies all support components and circuits including the mbed Onboard Interface design that provides simple USB drag-n-drop programming and CMSIS-DAP debug interface for the target microcontroller.

Development boards that are already based on the HDK are the quickest way to get started with the mbed platform. We manufacture official mbed Microcontroller modules that are specifically optimised for flexible rapid prototyping, and are available from distributors worldwide. Our partners are now also creating mbed-enabled hardware such as ultra low-cost ARM evaluation boards in the popular Arduino form-factor.

mbed HDK | mbed Microcontrollers

Free Online Development Tools

The mbed Compiler is a powerful online IDE that is free for use with hardware implementing the mbed HDK, and tightly integrated with the mbed SDK and Developer Website. Under the hood, it relies on the industry standard ARM professional C/C++ compiler, pre-configured and tested to generate fast, efficient code without fuss.

Login anywhere to get instant access to your development environment, on Windows, Mac, Linux. You can even work from tablets!

Whilst the mbed Compiler provides you your own private workspace, it is also fully integrated with the mbed.org Developer Website so you can easily import libraries and examples. If you choose to, publishing your own code and collaborating with other mbed users is just a few clicks too. The mbed Compiler also supports full export to different toolchains, incase your project demands it as you go to production.

Worldwide Developer Community

Using mbed means a huge shared context with other developers, and that means when you have a question, there is less pre-amble, less explanation and less time reproducing issues, and more time getting answers. We're proud that this has helped us grow an active and friendly community of skilled developers that are collectively helping get prototypes made even faster.

But where it really gets interesting is with code. Our developers are sharing thousands of open source repositories and building an extensive cookbook of recipes that you can reuse to build your products.

We've also made contributing back is easy; you can publish a library to mbed.org with a few clicks in the IDE, and let others build on your hard work. In fact, this is how some of our users end up collaborating on hard problems, and even getting contract work.

mbed and The Internet of Things

- mbed has always been a candidate for IoT development
  - Low power Cortex-M microcontrollers
  - Extensive ecosystem of associated technologies to build upon
  - Ease of experimentation
- For the Internet of things this means
  - Multilpe protocols (HTTP, Websockets, Sockets)
  - Multiple transports (Ethernet, Wifi, Cellular/3G)
  - Multiple MCUs, at different power/performance/cost/feature points
- Make the technology available to mix-and-match
  - Developers use MCU, transport and protocol to suit thier application
  - Layered approach, prototype with Ethernet, develop with Wifi

Protocol : HTML5 and Websockets

- Sockets and HTTP are well understood
  - Lets consider Websockets!
- New feature of HTML5 (RFC 6455) providing:
  - Full-duplex communication
  - Over a single TCP socket
  - Standard and secure connections (ws:// and wss://)
- Motivation:
  - Replace existing polling techniques (AJAX) used in modern websites
  - Provide a two-way communication without multiple HTTP connections
  - Enable new classes of application
- Other notable HTML5 features:
  - HTML5 Canvas Element – For dynamic, scriptable 2D rendering

HTML5 Websockets Implementation*

- The client initiates a connection to the server as with HTTP
  - Requests the server "upgrade" to the Websocket protocol
  - The handshake from the client is as follows:

```
GET /demo HTTP/1.1
Host: example.com
Connection: Upgrade
Sec-WebSocket-Key2: 12998 5 Y3 1  .P00
Sec-WebSocket-Protocol: sample
Upgrade: WebSocket
Sec-WebSocket-Key1: 4 @1  46546xW%0l 1 5
Origin: http://example.com

^n:ds[4U
```

```
HTTP/1.1 101 WebSocket Protocol Handshake
Upgrade: WebSocket
Connection: Upgrade
Sec-WebSocket-Origin: http://example.com
Sec-WebSocket-Location: ws://example.com/demo
Sec-WebSocket-Protocol: sample

8jKS'y:G*Co,Wxa-
```

- Protocol
  - Once connected, data packets can be exchanged in both directions

0x00	UTF-8 Encoded Text	0xFF

HTML5 Websockets Advantages

- Websockets use an HTTP-compatible handshake
  - Servers can share HTTP(80) and HTTPS(443) ports with websockets
  - Benefits from HTTP traffic being widely supported across networks, whilst other TCP/IP ports are often blocked
- A full-duplex connection not available with standard HTTP
- Recognised approach to normal and secure connections
  - ws:// and wss:// analogous to http:// and https://
- A huge industry behind it, and investing in it
  - Server, browser and middleware technologies will implement it
  - This investment can be reused in the embedded space!

Transport : Ethernet

- Ethernet (IEEE 802.3) is a standard packet-based networking protocol for providing wired local area networks (LANs).
  - Popularity gives lots of infrastructure support; hubs, switches, routers
- Ethernet connectivity is available built-in to microcontrollers
  - Wired network access is low cost and accessible

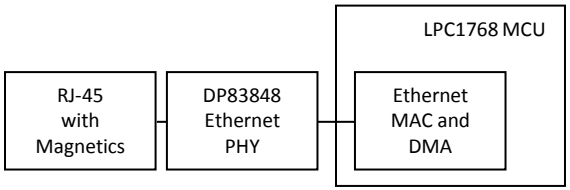

- Example solution
  - National Semiconductor DP83848 PHY and the NXP LPC1768 MCU
  - Ethernet MAC and PHY driver runs on MCU
  - TCP/IP stack runs on MCU to provide sockets interface to application

Transport : WiFi

- Wifi (IEEE 802.11) is a standard wireless networking protocol popular for providing wireless local area networks (WLANs)
  - Widely used to connect electronic devices to the internet
- Wifi commonly accessible to MCUs in the form of modules

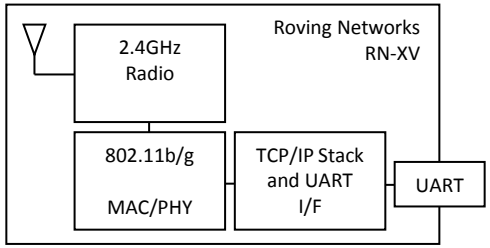

- Example solution
  - Roving Networks RN-XV WiFi module
  - Includes 2.4GHz radio, PHY/MAC for 802.11, TCP/IP network stack

Transport : Cellular

- Cellular networks (GPRS, 3G) provide wireless connectivity over a wide geographic area to a large number of trancievers.
  - Data-only communication becoming common in high volume devices
- Historically available as dedicated GPRS serial modules
  - Can now use more modern commodity modems, even USB modems

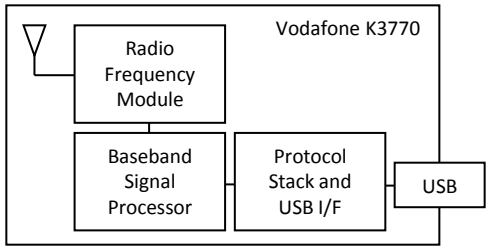

- Example solution
  - Vodafone K3770 modem, connects to LPC1768 USB Host Controller
  - USB host runs on MCU, configures dongle for PPP connection
  - TCP/IP stack runs on MCU to provide sockets interface to application

Overview

- Background & Application
- mbed: Hardware and software platform
- System development
- Next steps

Conceptual Node Schematic

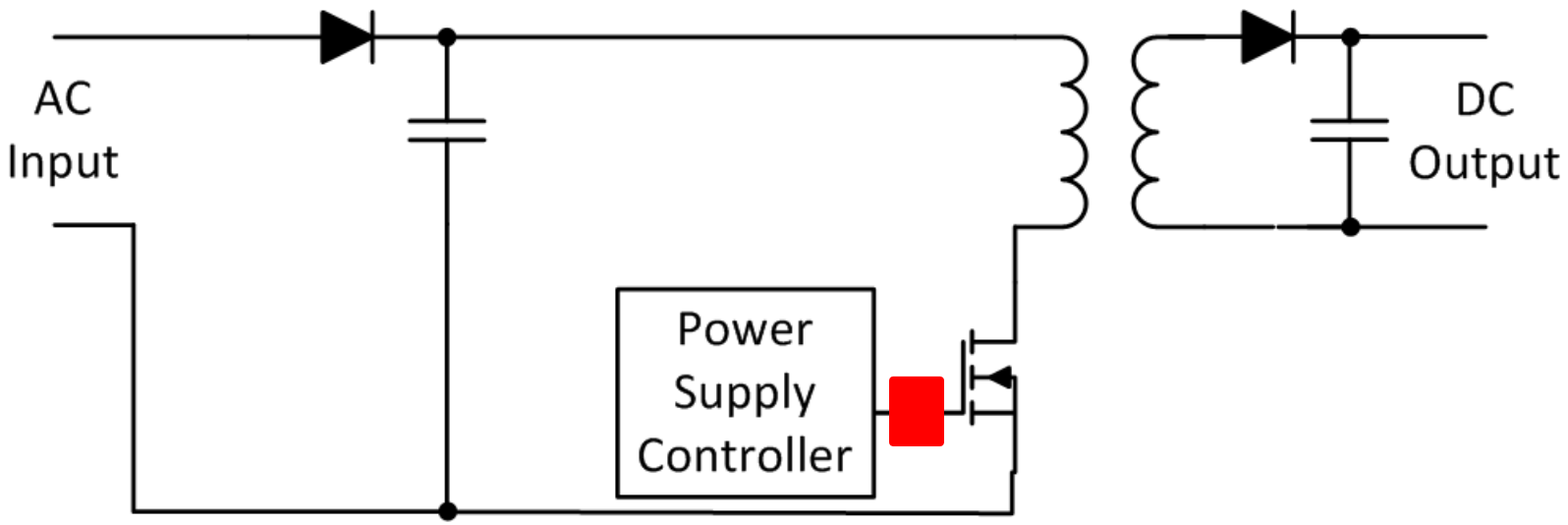

V_{signal} Scope Traces

<u>LOW Load</u>

AC Power = 1 W

Freq = 30 kHz

Avg Low Duty Cycle = 0.05

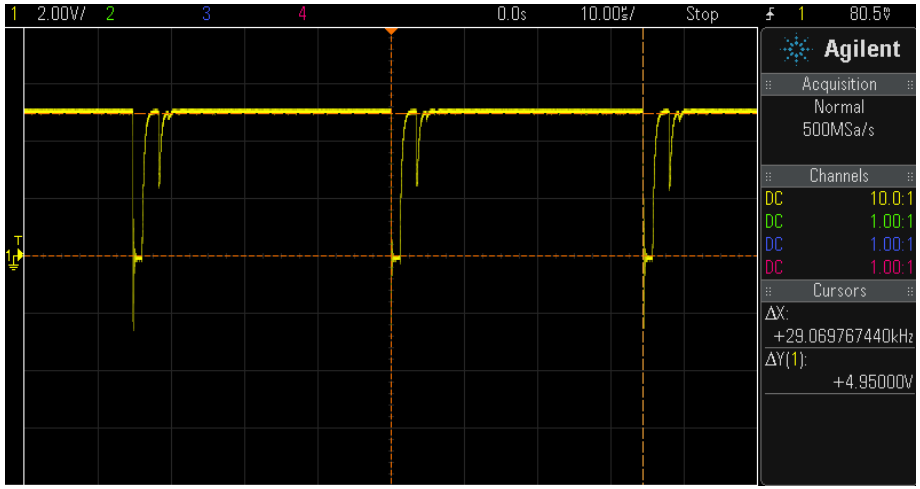

<u>HIGH Load</u>

AC Power = 35 W

Freq = 130 kHz

Avg Low Duty Cycle = 0.45

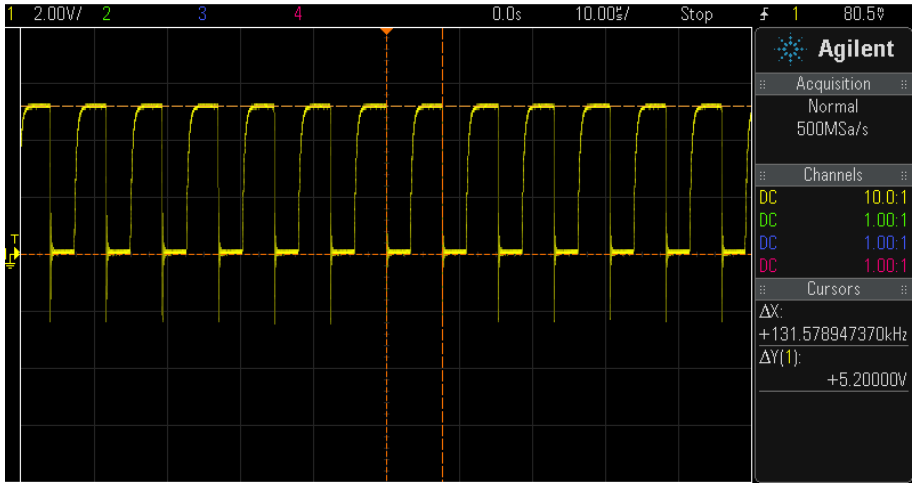

(Time scale is 10µs/div for both plots.)

AC Power vs. Avg Duty Cycle

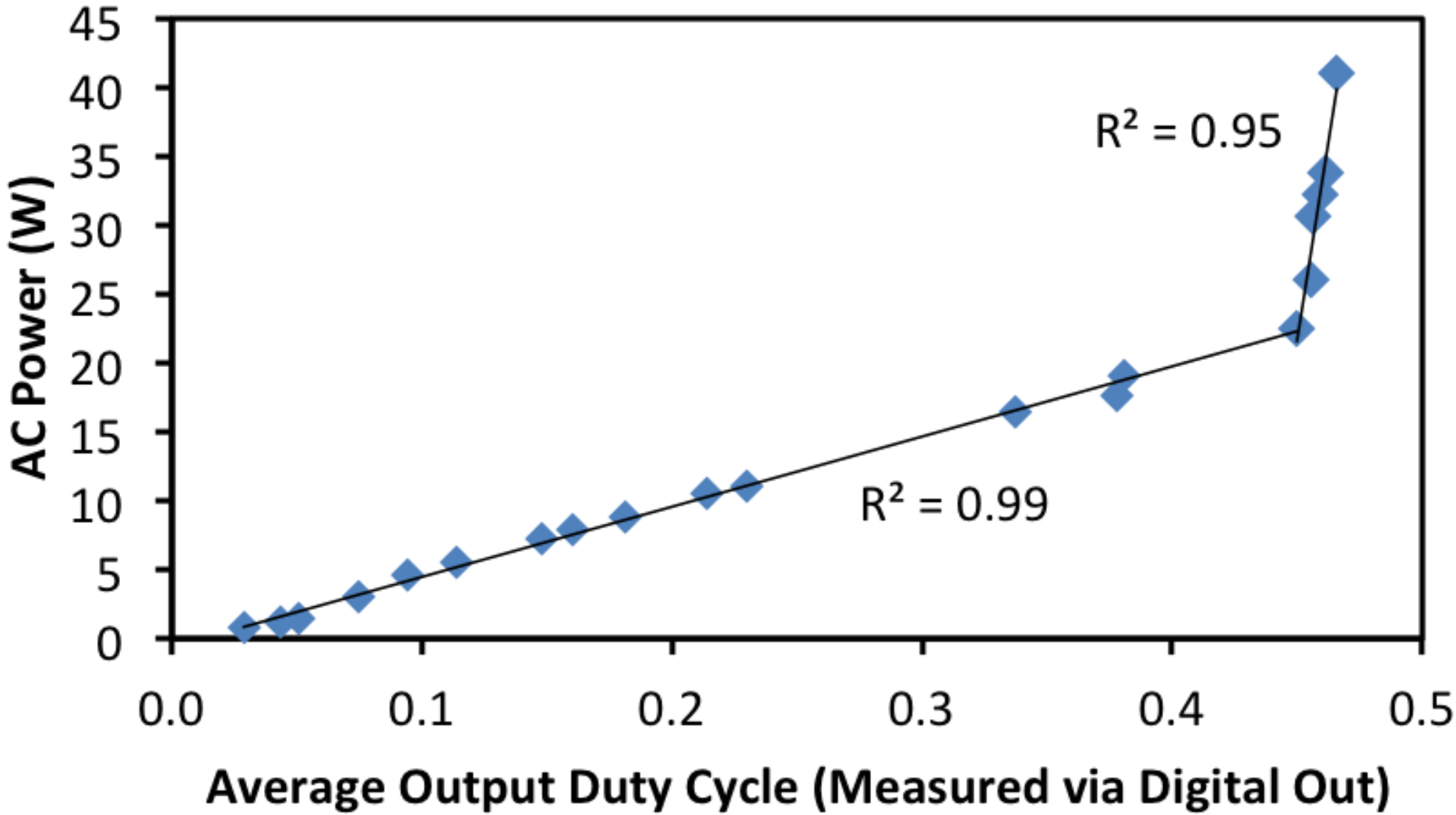

Conceptual Node Schematic

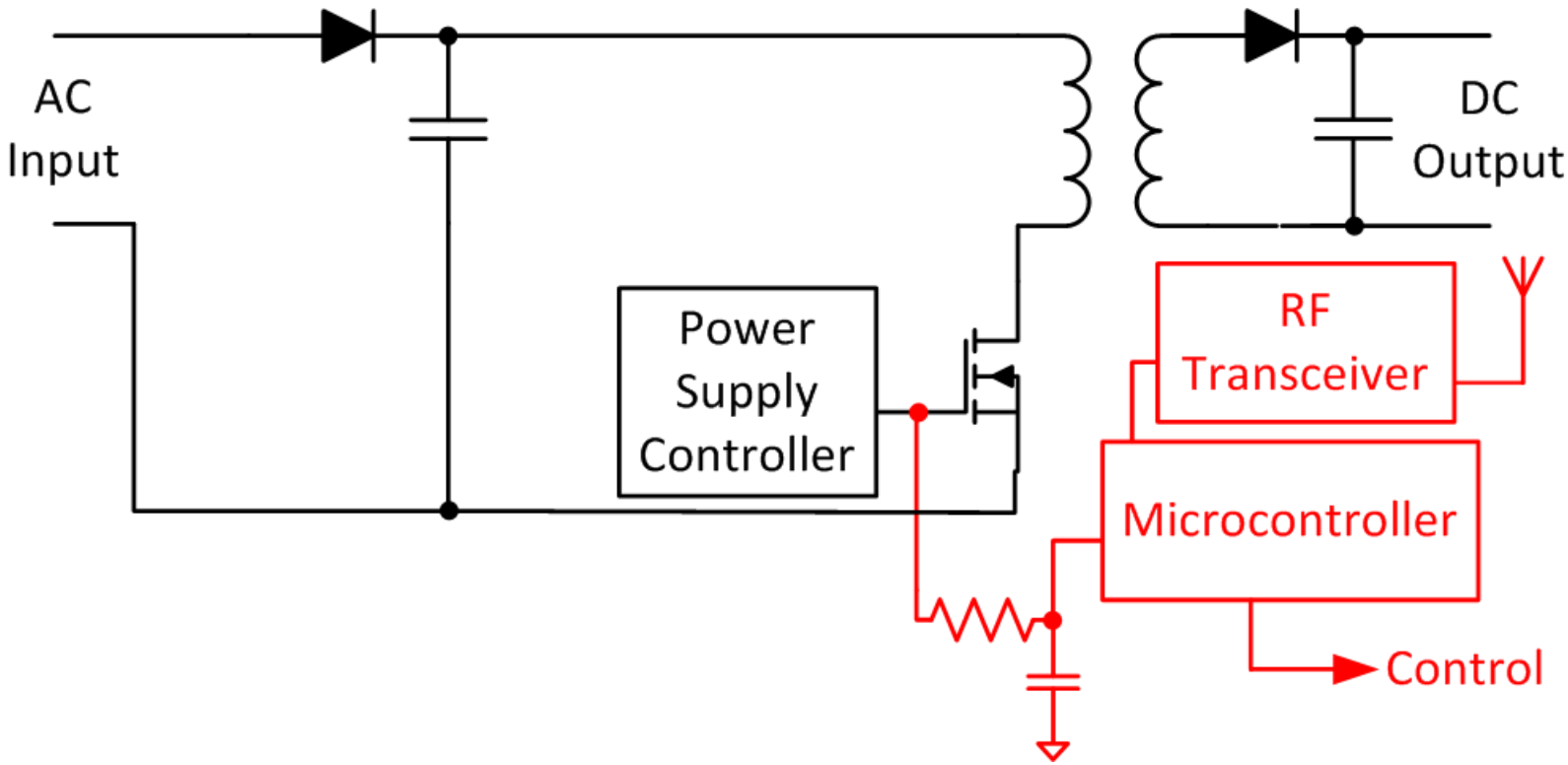

Native Controls

- Retain existing UI for users
- Integrate control into the product
  - Upstream with CE manufacturers
  - MCU adds functionality to make products better

System Level Diagram

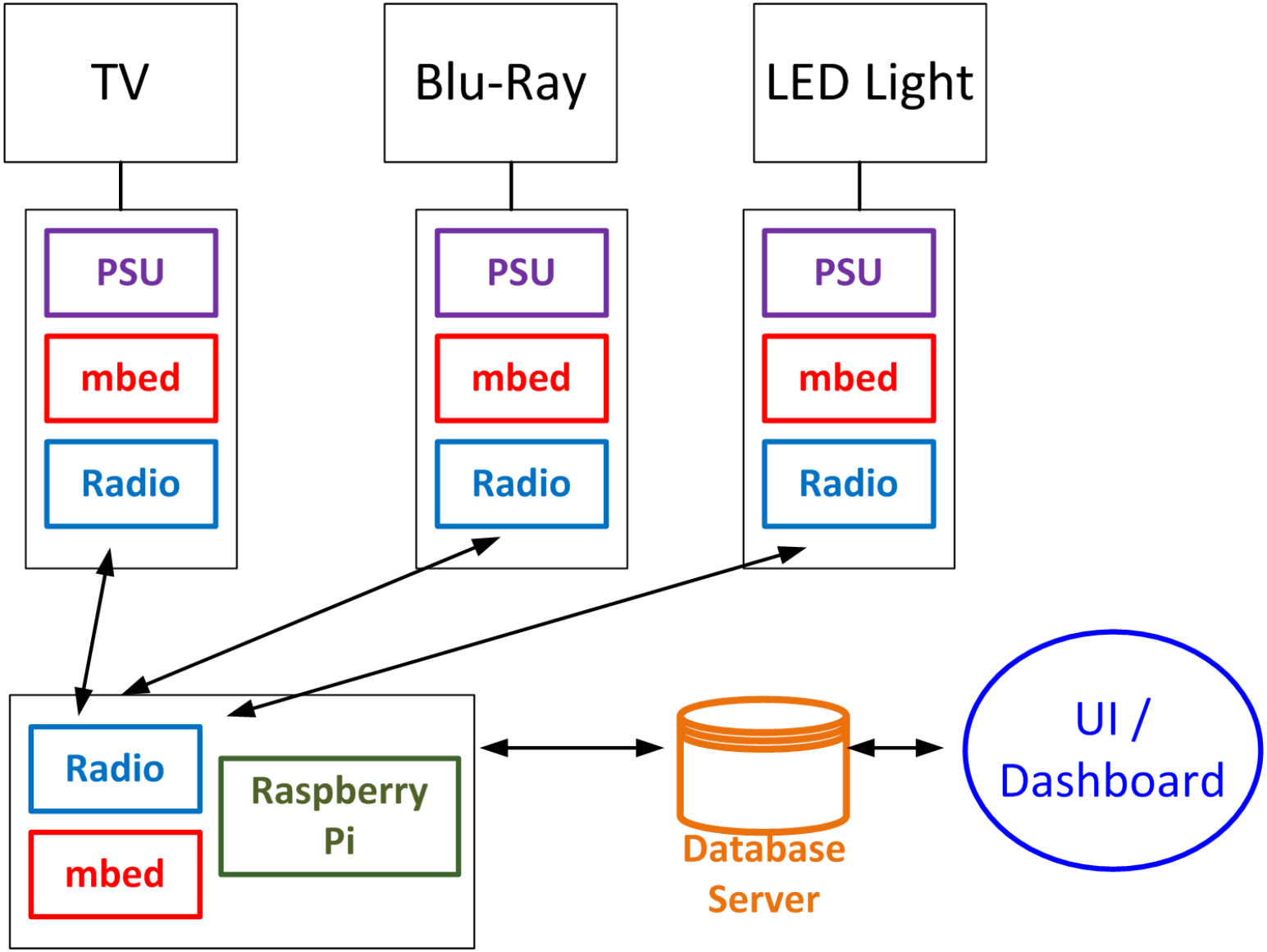

Software

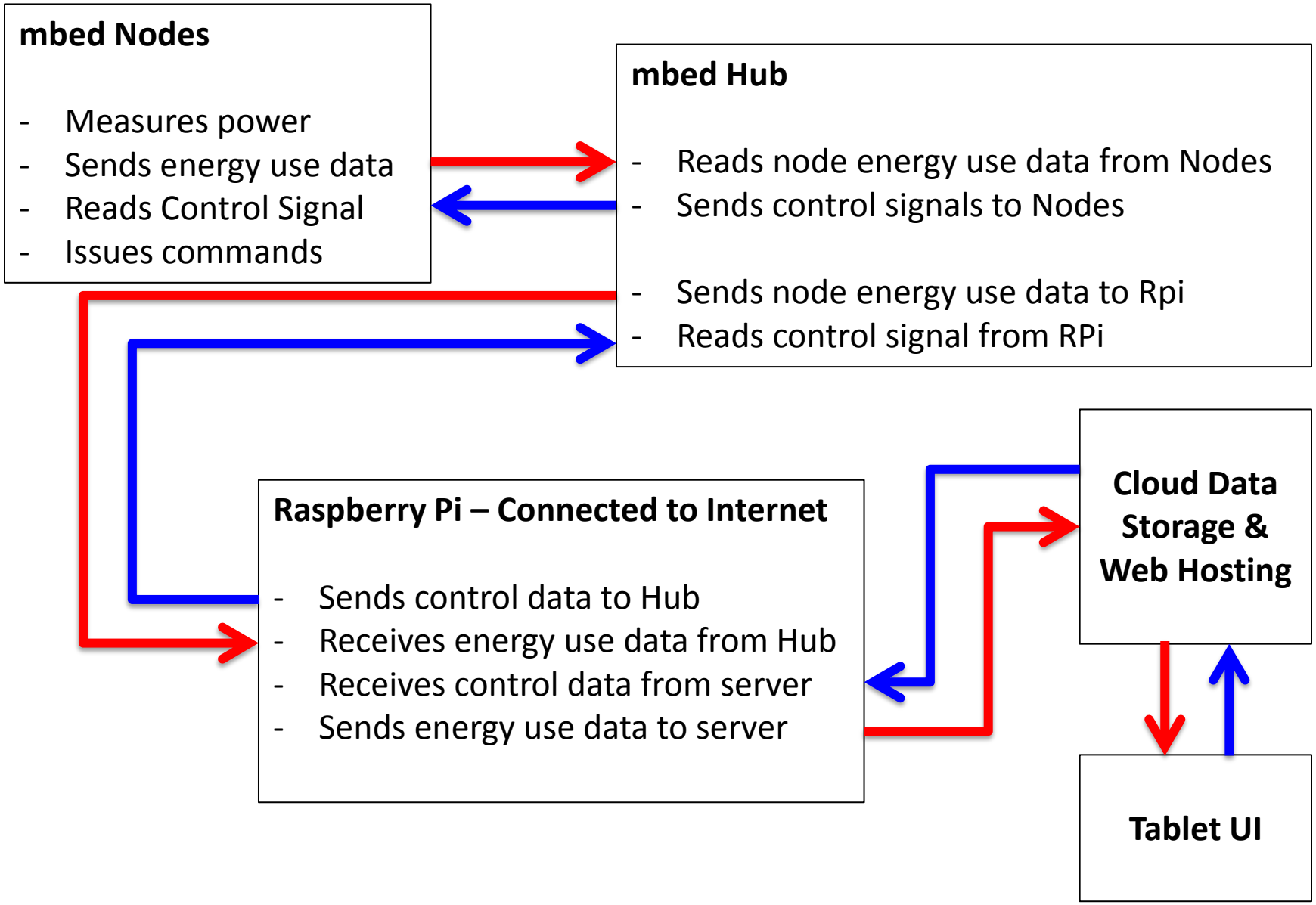
mbed Nodes
- Measures power
- Sends energy use data
- Reads Control Signal
- Issues commands
mbed Hub
- Reads node energy use data from Nodes
- Sends control signals to Nodes
- Sends node energy use data to Rpi
- Reads control signal from RPi
Raspberry Pi – Connected to Internet
- Sends control data to Hub
- Receives energy use data from Hub
- Receives control data from server
- Sends energy use data to server
Cloud Data Storage & Web Hosting
Tablet UI

ARM
ARM
Communicating Power Supplies
Lawrence Berkeley National Laboratory, Power Integrations, ARM
• Appliance power supplies stream usage data to cloud
• Energy efficiency gains through user awareness and automation
• ARM® Cortex®-M3 processor-based, developed using mbed™
MOUSER ELECTRONICS
Mentor Graphics
Solutions
dest selection
west products.
cts from over 500 manufacturers.
user.com

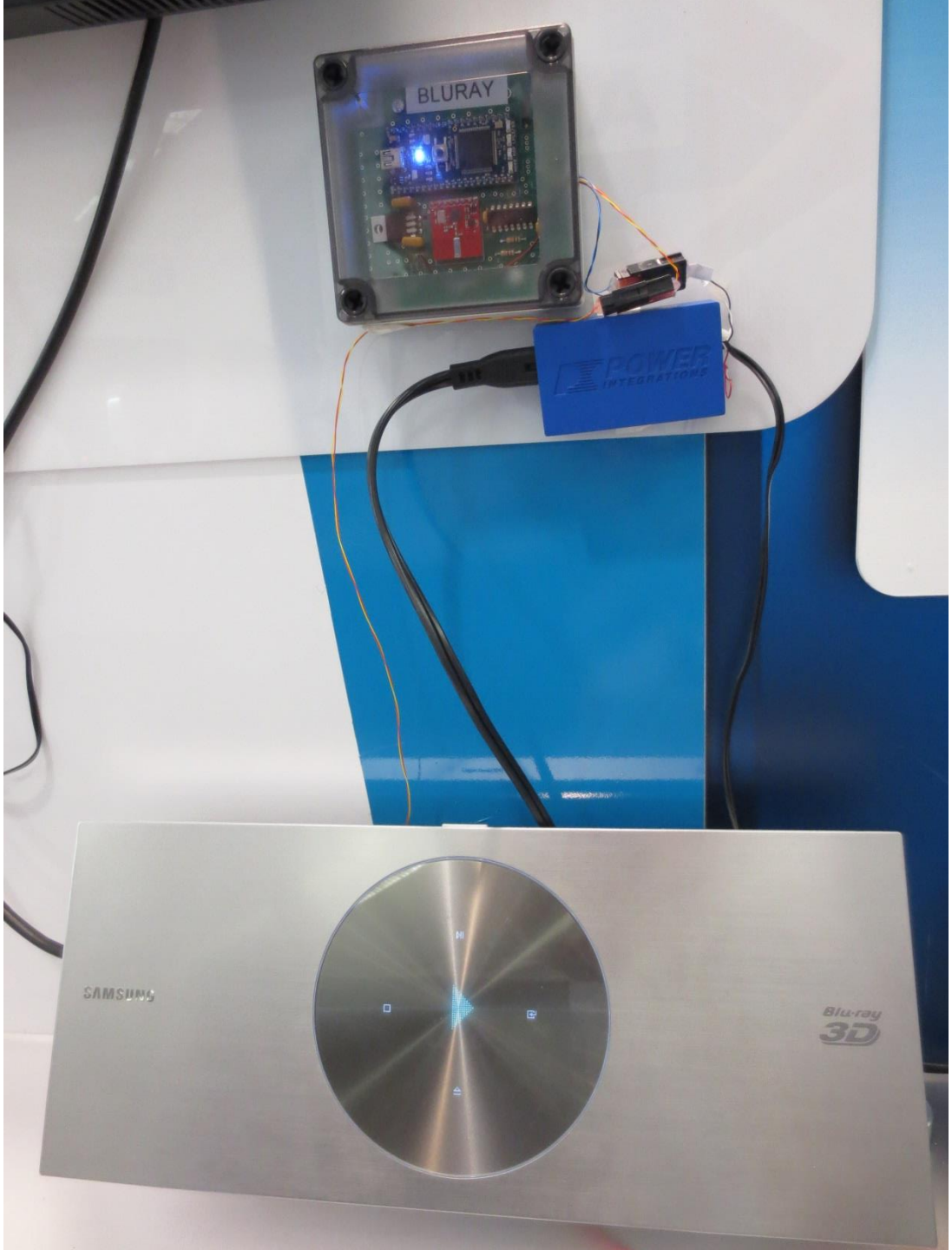
BLURAY
POWER INTEGRATIONS
SAMSUNG
Blu-ray 3D

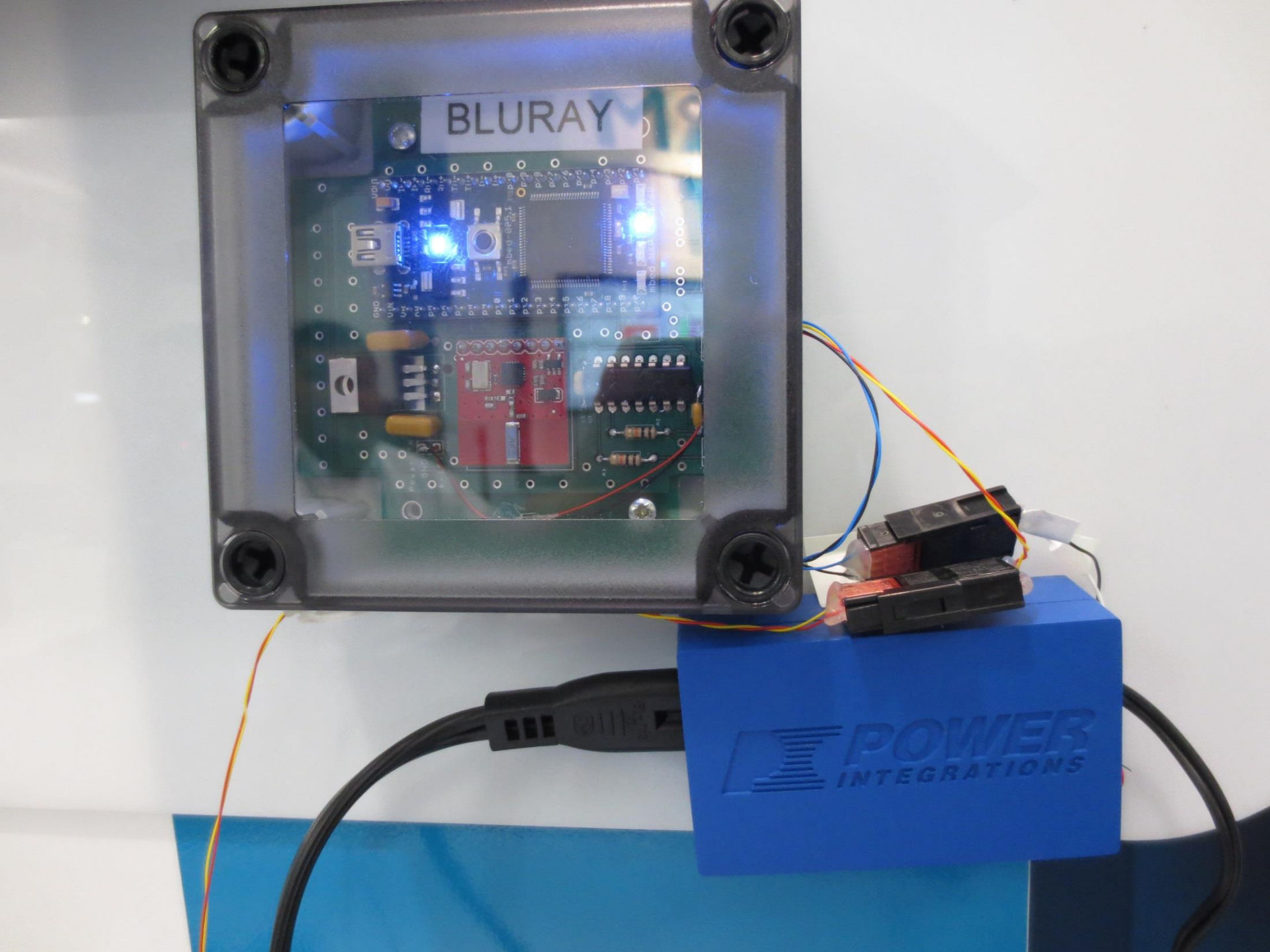
BLURAY
POWER
INTEGRATIONS

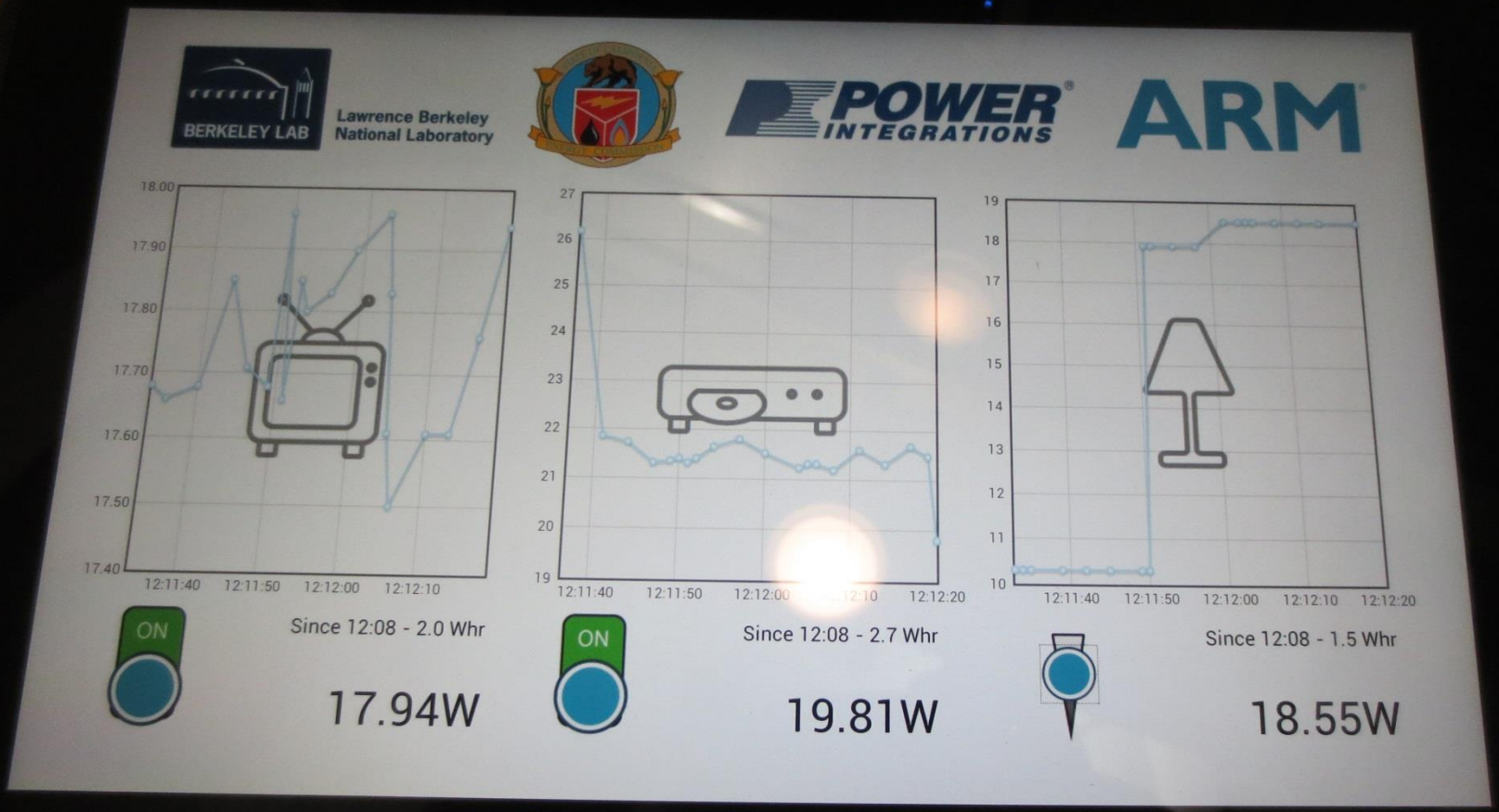
BERKELEY LAB
Lawrence Berkeley National Laboratory
POWER INTEGRATIONS
ARM
18.00
17.90
17.80
17.70
17.60
17.50
17.40
12:11:40
12:11:50
12:12:00
12:12:10
ON
Since 12:08 - 2.0 Whr
17.94W
27
26
25
24
23
22
21
20
19
12:11:40
12:11:50
12:12:00
12:12:20
ON
Since 12:08 - 2.7 Whr
19.81W
19
18
17
16
15
14
13
12
11
10
12:11:40
12:11:50
12:12:00
12:12:10
12:12:20
Since 12:08 - 1.5 Whr
18.55W

Demonstration

Come to Booth 1708 to see the demo

Design West 2013

Summary

- Plug load energy use is growing
- Next generation monitoring and controls can help
  - Low-cost power monitoring in PSU
  - Native controls to retain existing UIs
- mbed enables rapid prototype development
  - Integration of wireless communication
  - Analog and digital I/O
  - Plentiful processing and memory
  - Still lots of unused peripherals in our case

This work was supported by California rate payers through California's System Benefit Charges administered by the California Energy Commission under Public Interest Energy Research contract No. 500-10-052

This work was supported by the Assistant Secretary for Energy Efficiency and Renewable Energy, Office of Building Technology, State and Community Programs, of the U.S. Department of Energy under Contract No. DE-AC02-05CH11231.

APPENDIX C:
Development of a Communicating Power Supply to Assist in Energy Monitoring and Management

Development of a Communicating Power Supply to Assist in Energy Monitoring and Management

Alan Meier

Steven Lanzisera

Anna Liao

Andrew Weber

Lawrence Berkeley National Laboratory

Abstract

Saving energy in buildings is often hampered by lack of detailed information about what is using energy and how much. The problem is especially acute for the large number of small, energy-using devices that are present in both residential and commercial buildings. Most of these products use a power supply to operate electronic and other internal components. We developed a "communicating power supply" to enable communication of energy information to a building management system or other central entity. A related goal was to assign to each power supply or device a unique identifier, that is, a kind of "electronic UPC" (Universal Product Code) that can be recognized by a building energy management system or other networked entity. The communicating power supply must be flexible enough to transmit data through power line carrier (PLC) or wireless networks, or piggyback on communications capabilities of downstream devices.

We worked with a large manufacturer of power supplies and a large designer of microprocessors to miniaturize these functions onto a single chip which will, ultimately, add very little extra cost or complexity to existing power supply designs. We anticipate that Energy Star and other efficiency endorsement programs will include communications capability in future technical specifications. Our longer-term goal is to add control capabilities to the communicating power supplies.

Background and Project Goals

Saving energy in buildings is often hampered by lack of adequate information about which device is using energy and how much it is using. This problem is especially acute for the large number of smaller energy-using devices that are present in both residential and commercial buildings (e.g., plug loads). A large fraction of these loads are electronics, that is, devices that process information in some manner. In especially efficient homes, plug loads often represent 30% of total electricity use [1] and a similar fraction in commercial buildings [2]. Moreover, the amount of electricity used by plug loads is growing faster than any other load category in both sectors [3]. For example, in the United States, space heating and cooling have now fallen to less than half of total site residential energy use and has been overtaken by appliances, plug loads, and electronics [4]. Most major economies have begun to regulate the efficiencies of the energy-intensive appliances, but hundreds of other products are not expected to be regulated. The growth in these end uses makes their control and management increasingly important.

Today's solutions do a poor job of economically monitoring and controlling plug loads [5]. Furthermore, the in-building consumption is often strongly affected by individual operating practices and are therefore impossible to regulate. Effective energy *management* cannot occur until more information about energy *consumption* is obtained. To date, however, there is no cheap method to know and control the energy consumption of plugged-in devices. Numerous products have recently become available that offer monitoring and control capabilities incorporated in the wall outlet or as an independent power-strip [6]. These partly address the problem but have important drawbacks. First,

they must be individually installed and programmed. If the device is moved, or additional devices are plugged in, then the information and control aspects are undermined. Second, many of the products rely on proprietary communications protocols, which leads to incompatibilities and legacy networks. Finally, the products are still relatively expensive so installation of a network connected to all of the devices in a building can easily cost thousands of euros. Thus, they are adequate for short-term or limited operation but not suited for a permanent, scalable, system.

Figure 1. Relationship of the communicating power supply to appliances and the central entity

The goal of this project is to incorporate standard power measurement and reporting capability into power supplies in such a manner so that the incremental cost is very low. The power supply (typically converting AC to DC) is the first destination of electricity flowing to nearly all electronics and in a majority of the small loads. Figure 1 illustrates the general goal of the communicating power supply.

These capabilities will greatly increase the ability to understand energy use in buildings and identify opportunities for savings. These same features may also be exploited in other ways to provide new applications that we cannot predict today, such as to enhance health and safety.

The fundamental building block of this infrastructure is the conventional, switch-mode power supply. Billions of power supplies are manufactured every year for all types of IT equipment, audio and video equipment, mobile phones, and other products. These power supplies are a commodity, costing less than a few euros each for wholesale purchases. The market for these components is extremely competitive, so manufacturers of power supplies are reluctant to add capabilities unless they can be confident that the features are desired by their customers and will pay a higher price.

We collaborated with two companies to develop a technically feasible, economic solution. Power Integrations is a major supplier of high-performance electronic components used in high-voltage power-conversion systems. Its solutions enable compact, energy-efficient AC-DC power supplies for a vast range of electronic products, including TVs, PCs, appliances, smart utility meters and LED lights. We also collaborated with ARM, a supplier of microprocessors in many advanced digital products.

Technical Features of the Communicating Power Supply

The communicating power supply has three features beyond those found in a standard power supply. These are:

- A unique identity for each power supply
- A means for the power supply to measure its energy consumption
- A means for the power supply to communicate that information to the network

Ultimately, the communicating power supply will have a fourth feature: a means of controlling the power use of the device, that is, to switch off the device.

The communicating power supply must participate in a network to deliver information about its activities. This capability requires two features:

- A central entity to receive and process the data
- Standardized protocols for communicating between the communicating power supply and the central entity

A schematic of the network is shown in Figure 2. Product A represents an electronic device without networking capability such as a compact fluorescent light, battery charger, etc. The communicating power supply in this case an external unit, collects product information, controls signals, and energy consumption from Product A. The communicating power supply transmits these data, plus a unique identifier, via power line communication (PLC), and the information is collected in a central entity (that is, a database). Product B represents a networked device, such as a computer, blu-ray, etc. Product B is similar to Product A, with one important difference: the data are transmitted by the networked device via the Ethernet to the central database.

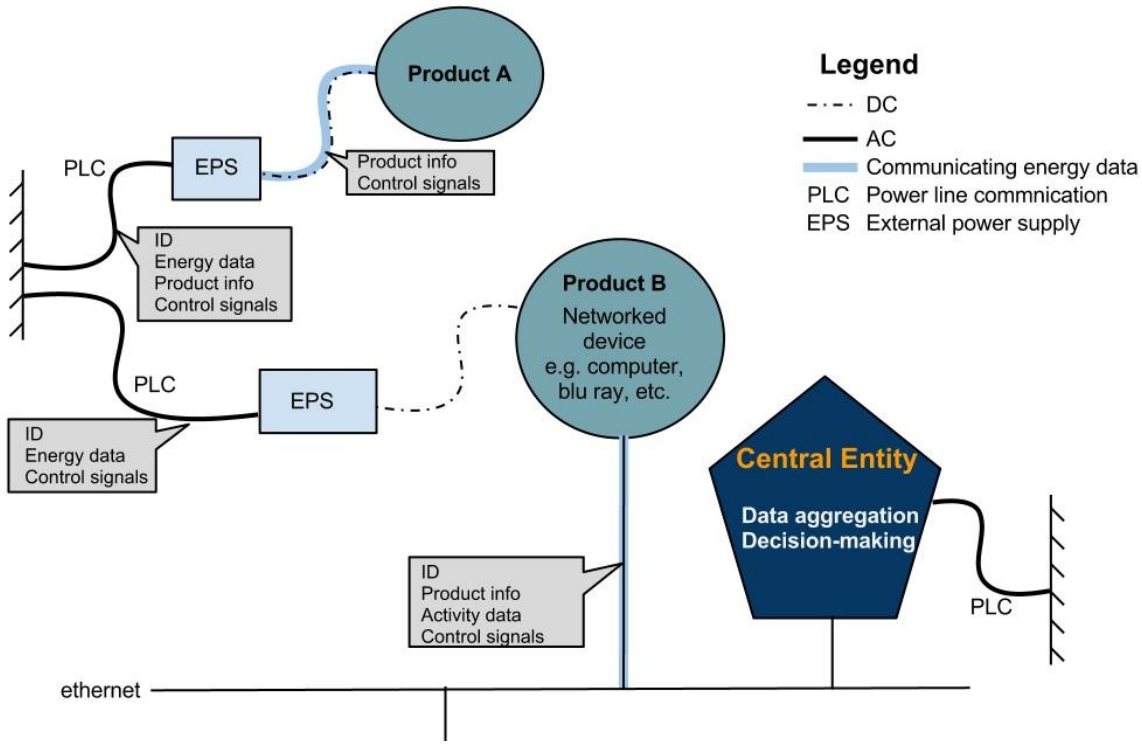

Figure 2. System overview of communicating power supplies

The key aspects of the communicating power supply are described in the following sections.

Unique Identity

Each power supply will need to have a unique identity that no other device will have. In computers today, we use MAC address, a 48 bit identifier, to uniquely identify anything with an Ethernet or Wi-Fi connection. As many more devices are network-connected, there is concern that we may one day run out of MAC addresses because they are inefficiently distributed (i.e., many addresses will never be used, but it is not possible to be sure this is true). As a result the Extended Unique Identifier is new

standard in place to replace the MAC address [7], and it is a 64 bit sequence with 2×10^{19} possible addresses. The EUI-64 is the standard unique identifier for the new generation of Internet Protocol networking (IPv6) and the Internet of Things. We have selected the EUI-64 as the unique identifier for this work.

In addition to unique identity, it is useful to have a means to identify the type of device and any other information about that device. The Universal Serial Bus (USB) specification includes a device classification system [8], and this system always includes the use of a few numbers to uniquely identify the vendor, the product (unique for a particular vendor), and the version of the product. It can also include long text strings or binary values to provide information to the user. In the case where only a few numbers are exchanged, the connected system must either be able to interpret these values on its own or connect to a database on the Internet to download the corresponding descriptions. A similar approach is appropriate for communicating power supplies. We propose to use a vendor ID, a vendor-specified device type, a vendor-specified product ID, and a version number. Allowing the vendor to specify these values provides flexibility and allows for innovation. However, if a vendor does not register these values with a central entity, end users and energy management systems will have no way to determine the device type. The alternative is to prescribe a taxonomy of device types rather than allowing for vendor selected values, and this improves device identification at the cost of flexibility. Because understanding the vendor stated device capabilities is critical and must be specified by the vendor, the downside to vendor specified device type seems small.

Measure and Accumulate Data

We developed a system to measure power and energy in a switching power supply using very low-cost components. The switching power supply modulates its switching properties based on the power needed by the load. Measuring these switching properties enables a microprocessor to estimate the load. Figure 3 shows two oscilloscope traces of the switching node of the power supply for low load and high load. The duty cycle (low spent time as a fraction of the total time) varies from 0.05 to 0.45 from low load to maximum load, and the waveform switches value tens or hundreds of thousands of times per second. To cheaply measure this duty cycle, we first take this high speed signal and use an analog filter to determine its average value. The average value is measured using an analog to digital converter, and the resulting digital value is turned into a power value using a look up table with interpolation. Look up tables are very efficient methods for storing non-linear functions on low-cost microprocessor systems.

Low-cost microprocessors often have analog to digital converters with sufficient accuracy to provide better than 1% accuracy over the full range of loads a power supply has to offer. The variability between different power supplies in terms of switching duty cycle versus the load is likely to be a few percent, and the overall accuracy and repeatability will be about 5%. Therefore, even very low-cost analog to digital converters will provide the accuracy needed. The sample rate of this analog signal can be quite low as well, which will further reduce costs. Our implementation has a signal bandwidth of about 1Hz; thus, a sampling rate of only a few times a second will enable the system to fully capture all of the system dynamics.

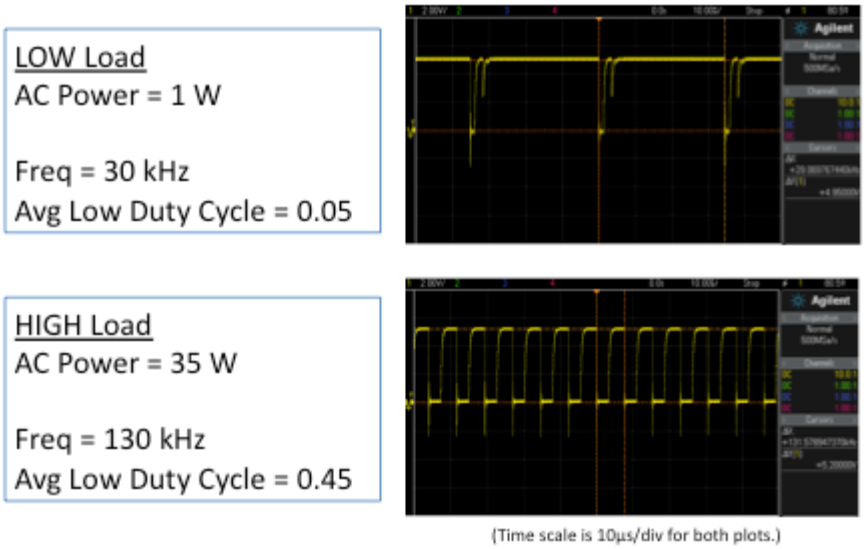

Figure 3. Oscilloscope traces demonstrating that a low-cost analog-to-digital monitoring method can achieve acceptable accuracy over a wide range of loads

Communicate via a Network

The communicating power supply must have a network interface to enable communication. Initially, we identified two high-level communication strategies: network communication in the power supply or local communication to another processor in the system that already has a network connection. The second method is preferred to lower system costs if the device is already connected to the network (e.g., an Ethernet or Wi-Fi enabled television). In many cases (e.g., light bulbs), the device will not already be connected to a network, and the lowest cost network connection that provides the required performance is desired. We previously surveyed a variety of network connections possible, and low-cost wireless connections such as Zigbee, Z-wave, or 6LoWPAN are the best options. Power line carrier communication requires not only expensive chips but also expensive passive components. The chips and passives required for Zigbee of 6LoWPAN can be purchased for under one euro in moderate volumes, and it seems likely these chips will decrease in cost further as volumes increase. Z-wave chips are more expensive but have enhanced interoperability. We do not want to pick a "winner" technology in this space, but it is clear that the low-cost wireless options have a significant advantage in terms of cost and implementation complexity.

Results and Future Work

Our goal was to demonstrate a proof of concept, that is, a power supply that can measure power use, store its identity, and then communicate this information to a central entity. As indicated, this is a hardware, software, and communications problem, extending beyond the power supply itself.

We successfully created a prototype communicating power supply (see Figure 4). This has already undergone one generation of miniaturization. Ultimately, the components will need to be integrated into a single chip (or two) so that it does not enlarge the form factor of existing power supplies.

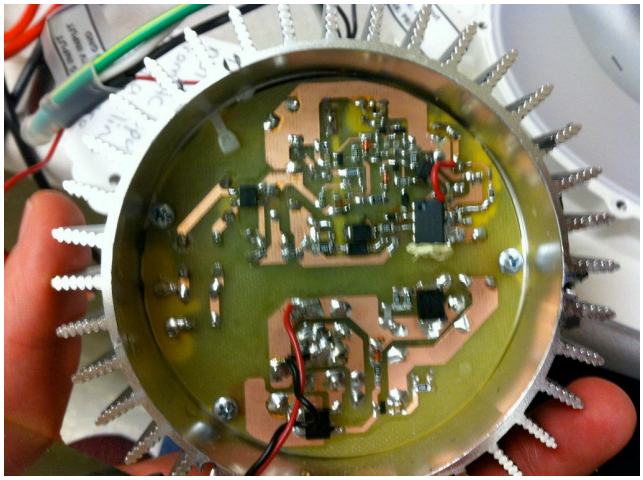

Figure 4. Second-generation prototype of communicating power supply

We also created a network consisting of three devices, each with a communicating power supply. These products report identity and energy information over a wireless network (based on IEEE 802.15.4, the same wireless standard as Zigbee [9] and 6LoWPAN [10] . Finally, we created a basic energy dashboard that can display energy information collected by the system. This dashboard offers sufficient features to demonstrate functionality of the whole system. The data will be stored to a database, and users will be able to view data at will.

The same hardware and network can, in principle, be used in reverse to send control messages from the central entity to specific equipment. This will enable the devices to be remotely switched on and off. Remote control will be the subject of future work.

A communicating power supply will cost more than conventional power supplies. Our goal is to make the incremental cost very small. The measurement feature will cost less than €0.10 when mass produced. For appliances already equipped with communications capability, the communicating power supply could piggy-back; this will lower the cost since communications is the most expensive feature. However, external incentives will still be needed to encourage manufacturers to add this feature. Voluntary programs, such as Energy Star, could easily make communications part of their specifications. These programs could assure a market and encourage economies of scale.

Communicating power supplies, and the ecosystem in which they operate, will permit much more detailed understanding of electricity consumption. This offers the potential for reducing energy consumption of products whose services are not required at that specific time without the active involvement of the occupants.

Acknowledgments

This work was supported by the California Energy Commission's Public Interest Energy Research program and by the Assistant Secretary for Energy Efficiency and Renewable Energy, Building Technologies Program, of the U.S. Department of Energy, under Contract No. DE-AC02-05CH11231.

References

[1] S. Lanzisera, S. Dawson-Haggerty, X. Jiang, H. Y. Cheung, J. Taneja, J. Lai, J. Ortiz, D. Culler, and R. Brown, "Wireless electricity metering of miscellaneous and electronic devices in buildings," in *Future of Instrumentation International Workshop (FIIW), 2011*, 2011, pp. 16–19.

[2] R. S. Srinivasan, J. Lakshmanan, E. Santosa, and D. Srivastav, "Plug-load densities for energy analysis: K-12 schools," *Energy Build.*, vol. 43, no. 11, pp. 3289–3294, Nov. 2011.

[3] O. Comstock and K. Jarzomski, "Consumption and Saturation Trends of Residential Miscellaneous End-Use Loads," in *2012 ACEEE Summer Study on Energy Efficiency in Buildings*, Pacific Grove, 2012.

[4] Energy Information Administration, "Heating and cooling no longer majority of U.S. home energy use," 07-Mar-2013. [Online]. Available: http://www.eia.gov/todayinenergy/detail.cfm?id=10271#. [Accessed: 04-Apr-2013].

[5] D. J. Nelson and A. J. Berrisford, "Residential End Use Monitoring: How Far Can We Go?," in *Proceedings of ACEEE Summer Study on Energy Efficiency in Buildings*, Pacific Grove, Calif., 2010, p. 281.

[6] D. Arnold, M. Sankur, and D. M. Auslander, "An architecture for enabling distributed plug load control for commercial building demand response," in *Innovative Smart Grid Technologies (ISGT), 2013 IEEE PES*, 2013, pp. 1–6.

[7] G. Montenegro, N. Kushalnagar, J. Hui, and D. Culler, "Transmission of IPv6 packets over IEEE 802.15. 4 networks," *Internet Propos. Stand. Rfc*, vol. 4944, 2007.

[8] USB Implementers Forum, "USB-IF Device Class Documents." [Online]. Available: http://www.usb.org/developers/docs/devclass/. [Accessed: 12-Apr-2013].

[9] Zigbee Alliance, "ZigBee Standards Overview." [Online]. Available: http://www.zigbee.org/. [Accessed: 14-Apr-2013].

[10] The 6lowpan Working Group, "IPv6 over Low power WPAN (6lowpan)." [Online]. Available: http://datatracker.ietf.org/wg/6lowpan/charter/. [Accessed: 14-Apr-2013].