Energy Research and Development Division
FINAL PROJECT REPORT

EFFICIENT ELECTRONICS THROUGH MEASUREMENT AND COMMUNICATION

National Lab Buildings Energy Efficiency Research Projects

Prepared for: California Energy Commission
Prepared by: Lawrence Berkeley National Laboratory

MARCH 2014
CEC-500-2015-038

PREPARED BY:

Primary Author(s):
Alan Meier
Steven Lanzisera
Andrew R. Weber
Anna Liao
Christopher Styles

Lawrence Berkeley National Laboratory
1 Cyclotron Road, MS2000
Berkeley, CA 94720
Phone: 510-486-4740 | Fax: 510-486-4673

Contract Number: 500-10-052

Prepared for:

California Energy Commission

David Weightman
Project Manager

Heather Bird
Contract Manager

Virginia Lew
Office Manager
Energy Efficiency Research Office

Laurie ten Hope
Deputy Director
ENERGY RESEARCH AND DEVELOPMENT DIVISION

Robert P. Oglesby
Executive Director

DISCLAIMER

This report was prepared as the result of work sponsored by the California Energy Commission. It does not necessarily represent the views of the Energy Commission, its employees or the State of California. The Energy Commission, the State of California, its employees, contractors and subcontractors make no warranty, express or implied, and assume no legal liability for the information in this report; nor does any party represent that the uses of this information will not infringe upon privately owned rights. This report has not been approved or disapproved by the California Energy Commission nor has the California Energy Commission passed upon the accuracy or adequacy of the information in this report.

LEGAL NOTICE

The Lawrence Berkeley National Laboratory, a laboratory owned by the U.S. Department of Energy (DOE), located at 1 Cyclotron Rd., Berkeley, California, is a national laboratory of the DOE managed by Regents of the University of California for the U.S. Department of Energy under Contract Number DE-AC02- 05CH11231. This report was prepared as an account of work sponsored by the Sponsor and pursuant to an M&O Contract with the United States Department of Energy (DOE). Neither Regents of the University of California, nor the DOE, nor the Sponsor, nor any of their employees, contractors, or subcontractors makes any warranty, express or implied, or assumes any legal liability or responsibility for the accuracy, completeness, or usefulness of any information, apparatus, product, or process disclosed, or represents that its use would not infringe on privately owned rights. Reference herein to any specific commercial product, process, or service by trade name, trademark, manufacturer, or otherwise does not necessarily constitute or imply its endorsement, recommendation, or favoring by Regents of the University of California, or the DOE, or the sponsor. The views and opinions of authors expressed herein do not necessarily state or reflect those of Regents of the University of California, the DOE, or the sponsor, or any of their employees, or the federal government, or any agency thereof, or the State of California. This report has not been approved or disapproved by Regents of the University of California, the DOE, or the sponsor, nor has Regents of the University of California, the DOE, or the sponsor passed upon the accuracy or adequacy of the information in this report.

DISCLAIMER

The government and the facility operator make no express or implied warranty as to the conditions of the research or any intellectual property, generated information, or product made or developed under this agreement, or the ownership, merchantability, or fitness for a particular purpose of the research or resulting product: that the goods, services, materials, products, processes, information, or data to be furnished hereunder will accomplish intended results or are safe for any purpose including the intended purpose; or that any of the above will not interfere with privately owned rights of others. Neither the government nor the facility operator shall be liable for special, consequential, or incidental damages attributed to such research or resulting product, intellectual property, generated information, or product made or delivered under this agreement.

ACKNOWLEDGEMENTS

This work was supported by the California Energy Commission, Public Interest Energy Research Program, under Agreement No. 500-10-052.

The project team at Lawrence Berkeley National Laboratory would like to thank the sponsor, the Public Interest Energy Research Program of the California Energy Commission, Heather Bird, Chris Scruton, and especially the project manager, David Weightman.

Thanks to Power Integrations, Inc. and ARM Holdings plc for their collaboration and participation in this research.

Thanks to the following individuals who contributed to this work:

Peter Vaughn, Douglas Bailey, Richard Fassler of Power Integrations

Dominic Pajak, Daniel Wright, Andrew Moore, Kumaran Siva, Will Tu of ARM

Lawrence Berkeley National Laboratory (LBNL) staff: Gari Kloss and Paula Ashley.

Thanks to the many industry professionals who shared their ideas and feedback for this project.

PREFACE

The California Energy Commission Energy Research and Development Division supports public interest energy research and development that will help improve the quality of life in California by bringing environmentally safe, affordable, and reliable energy services and products to the marketplace.

The Energy Research and Development Division conducts public interest research, development, and demonstration (RD&D) projects to benefit California.

The Energy Research and Development Division strives to conduct the most promising public interest energy research by partnering with RD&D entities, including individuals, businesses, utilities, and public or private research institutions.

Energy Research and Development Division funding efforts are focused on the following RD&D program areas:

- Buildings End-Use Energy Efficiency
- Energy Innovations Small Grants
- Energy-Related Environmental Research
- Energy Systems Integration
- Environmentally Preferred Advanced Generation
- Industrial/Agricultural/Water End-Use Energy Efficiency
- Renewable Energy Technologies
- Transportation

Efficient Electronics Through Measurement and Communication is the final report for the National Lab Buildings Energy Efficiency Research Projects (Contract Number 500-10-052) conducted by Lawrence Berkeley National Laboratory. The information from this project contributes to Energy Research and Development Division's Buildings End-Use Energy Efficiency Program.

For more information about the Energy Research and Development Division, please visit the Energy Commission's website at www.energy.ca.gov/research/ or contact the Energy Commission at 916-327-1551.

ABSTRACT

Saving energy in buildings is often hampered by lack of detailed information about what is using energy and how much. The problem is especially acute for the large number of small, energy-using devices that are present in both residential and commercial buildings. Most of these products use a power supply to operate electronic and other internal components. The research team developed a "communicating power supply" to enable communication of energy information to a building management system or other central entity. A related goal was to assign to each power supply or device a unique identifier, that is, a kind of "electronic UPC" (Universal Product Code) that can be recognized by a building energy management system or other networked entity. The communicating power supply must be flexible enough to transmit data via power line carrier or wireless networks, or piggyback on the communications capabilities of downstream devices. The research team worked with a large manufacturer of power supplies and a large designer of microprocessors to miniaturize these functions onto a single chip. The resulting design will, ultimately, add very little extra cost or complexity to existing power supplies while enabling a host of capabilities. The overall potential savings from the installation of communicating power supplies is estimated at about 3 percent of total building electricity use. The largest contributor to savings – 15 percent – will occur in the electronics end use, most of which are plug loads. The research team anticipates that ENERGY STAR® and other efficiency endorsement programs will include communications capability in future technical specifications. The longer-term goal is to add control capabilities to the communicating power supplies.

Keywords: Energy efficiency, energy management, energy reporting, green buildings, power supply, switched-mode power supply

Please use the following citation for this report:

Meier, Alan; Steven Lanzisera, Andrew R. Weber, Anna Liao, and Christopher Styles. (Lawrence Berkeley National Laoratory). 2014. ***Efficient Electronics Through Measurement and Communication.*** California Energy Commission. Publication Number: CEC-500-2015-038.

TABLE OF CONTENTS

LEGAL NOTICE ..... **i**

Disclaimer ..... **ii**

acknowledgements ..... **iii**

PREFACE ..... **iv**

ABSTRACT ..... **v**

TABLE OF CONTENTS ..... **vi**

LIST OF FIGURES ..... **vii**

LIST OF TABLES ..... **viii**

EXECUTIVE SUMMARY **1**

Introduction 1

Project Purpose 1

Project Results 1

Project Benefits 2

CHAPTER 1: Background and Introduction **3**

CHAPTER 2: Design Considerations for the Communicating Power Supply **6**

2.1 Features of Power Supplies 6

2.2 Potential Interfaces 7

2.3 Communication Strategies 7

2.4 Communication Protocols 8

CHAPTER 3: Prototype Development **10**

3.1 Introduction 10

3.2 Power Measurement 11

3.3 Communications Aspects 14

3.3.1 Individual Device Nodes 14

3.3.2 Hub 15

3.3.3 Raspberry Pi 15

3.3.4 Cloud Data Storage and Web Hosting 15

3.3.5 Tablet User Interface 15

CHAPTER 4: Energy Savings 19

4.1 Energy Savings from Improved Feedback 19

4.2 Energy Savings from Switching Off Equipment Performing No Useful Function 20

4.3 National Savings from Communicating Power Supplies 21

CHAPTER 5: Conclusions and Future Work 23

GLOSSARY 24

REFERENCES 25

APPENDIX A: Communicating Power Supplies: Bringing the Internet to the Ubiquitous Energy Gateways of Electronic Devices .....

APPENDIX B: Adding Low-Cost Internet Connectivity and Control To Your Design.....

APPENDIX C: Development of a Communicating Power Supply to Assist in Energy Monitering and Management.....

LIST OF FIGURES

Figure 1: Conceptual Schematic of a Communicating Power Supply 4

Figure 2: Conceptual Diagram of a Switched-Mode Power Supply 6

Figure 3: Network With Communicating Power Supply 10

Figure 4: Contributions From Power Integrations and ARM 11

Figure 5: Prototype Power Measurement Setup 12

Figure 6: Representative Oscilloscope Traces 13

Figure 7: AC Power vs. Average Duty Cycle 13

Figure 8: Second Generation Prototype 14

Figure 9: ARM mBed Board 14

Figure 10: Software Logic Diagram 16

Figure 11: Ecosystem with Three Communicating Power Supplies – TV, Blu-Ray, LED Light ... 17

Figure 12: Dashboard – Measured and Communicated Power Consumption 17

Figure 13: Design West Display Kiosk 18

LIST OF TABLES

Table 1: Communication Protocols 9

Table 2: Estimates of U.S. Electricity Savings From Communicating Power Supplies 21

EXECUTIVE SUMMARY

Introduction

Saving energy in buildings is often hampered by lack of adequate information about what is using energy and how much. This problem is especially acute for smaller energy-using devices (e.g., plug loads) that are present in both residential and commercial buildings. In California homes, plug loads represent roughly 30 percent of total electricity use and a similar fraction in commercial buildings. Because of this rapid growth in energy use, it is essential to develop ways to economically monitor and control plug loads. Yet today's technology solutions do a poor job of both. Some of these products are covered by minimum efficiency standards, but in-building consumption is strongly affected by operating practices. As a result, energy *management* cannot occur until more information about energy *consumption* is obtained.

Some technologies are already available today to measure electricity use and communicate this information to a network. However, these approaches are either too expensive, awkward to use, or inappropriate for wide-scale applications. For example, several vendors offer small devices that can be inserted between an appliance plug and the outlet. More sophisticated devices also communicate the consumption information to another entity through various networks. A few devices also receive information via the same network in order to control power to the appliance. Some "smart" powerstrips can individually control many appliances. But all of these devices are too expensive and they must be individually installed, programmed, and networked. In summary, there is no cheap method to know and control the energy consumption of plugged-in devices.

Project Purpose

The Lawrence Berkeley National Laboratory (LBNL) research team sought to develop a low-cost means of measuring the energy use of all kinds of plugged-in devices, with the additional capability of communicating that consumption data to a central entity. Researchers called the device a "communicating power supply."

Ideally, the communicating power supply would also be able to receive commands to shut off or switch on power.

These capabilities will make it possible to easily monitor energy use of individual appliances and other energy-using equipment in buildings and identify opportunities for savings.

Researchers worked with two key manufacturers to ensure that the solutions were technically feasible with strong market potential, and to speed progress through manufacturing and adoption pipeline.

Project Results

This project proved the technical feasibility of a communicating power supply. This was accomplished and demonstrated in both laboratory and trade-show environments. The system easily accommodated diverse electrical products, including lights and consumer electronics for which power consumption ranged from about 0 to 20 watts.

Exceeding the original project objectives, the research team also demonstrated that it was possible to transmit control signals to the communicating power supplies. Thus, true, two-way communication was established.

Project Benefits

This project offers several benefits:

- In the future, all energy using devices will one day be aware of their identity and share energy information over IP networks.
- By using mbed and other open-source systems, the research team was able to design and construct prototype with relatively few resources and staff, indicating that the added functionality could be available at reasonable price points, even for low-cost devices.
- The design allows for easy adoption by manufacturers and expansion to mass production. Indeed, Power Integrations, Inc., and ARM Holdings were ideal collaborators because their focus on solutions could rapidly scale to billions of products.
- The goal is to incorporate the communicating power supply in all products equipped with switched-mode power supplies. This goal can be achieved only if the cost is greatly reduced and incentives are introduced to make the installation attractive to manufacturers and consumers.
- Energy awareness enables new sets of interactive energy-saving behaviors where devices control the power state to meet user needs while minimizing energy use.
- Communicating power supplies are integrated directly into the product, maintaining native controls and automatically including product identity information.

Transmitting control signals to communicating power supplies greatly increases the potential applications

Consumers also require an environment to support the communicating power supply to extract the greatest possible benefit. This project enabled consumers to observe energy use of essentially all electrical devices in their homes (or commercial buildings); however, higher priority services must be developed. These higher priority services could include fault detection, safety, and inventory management. Ideally, a new service will arise that is so attractive that consumers will want to pay extra for communications and control functionality and energy monitoring becomes essentially free.

CHAPTER 1:
Background and Introduction

Saving energy in buildings is often hampered by lack of adequate information about what is using energy and how much. This problem is especially acute for the large number of smaller energy-using devices (e.g., plug loads) that are present in both residential and commercial buildings. In California homes, these plug loads represent roughly 30 percent of total electricity use and a similar fraction in commercial buildings. Most sources agree that the amount of electricity used by plug loads is growing faster than any other load category in both residential and commercial sectors. Because of this rapid growth in energy use, it is essential to develop ways to economically monitor and control plug loads. Yet today's technology solutions do a poor job of both. Some of these products are covered by minimum efficiency standards but in-building consumption is strongly affected by operating practices. As a result, energy *management* cannot occur until more information about energy *consumption* is obtained.

Some technologies are already available today to measure electricity use and communicate this information to a network. However, these approaches are either too expensive, awkward to use, or are inappropriate for wide scale applications. For example, several vendors offer small devices that can be inserted between an appliance's plug and the outlet. At a minimum, these devices measure power use and store that information for display at the point of measurement. More sophisticated devices also communicate the consumption information to another entity through various networks, such as wifi, Ethernet, Zigbee, and USB. A few devices also receive information via the same network to control power to the appliance. Some "smart" powerstrips can individually control many appliances. But all of these devices are too expensive for more than strategic applications – some cost more than $50 per point. Furthermore, they must be individually installed, programmed, and networked. Even small amounts of appliance reshuffling or accidental disconnections can lead to labor-intensive re-programming. In summary, there is no cheap method to know and control the energy consumption of plugged-in devices.

This project developed a low-cost means of measuring the energy use of all kinds of plugged-in devices, with the additional capability of communicating that consumption data to a central entity. The device is called a "communicating power supply." The broad design of the communicating power supply is illustrated in Figure 1.

Figure 1: Conceptual Schematic of a Communicating Power Supply

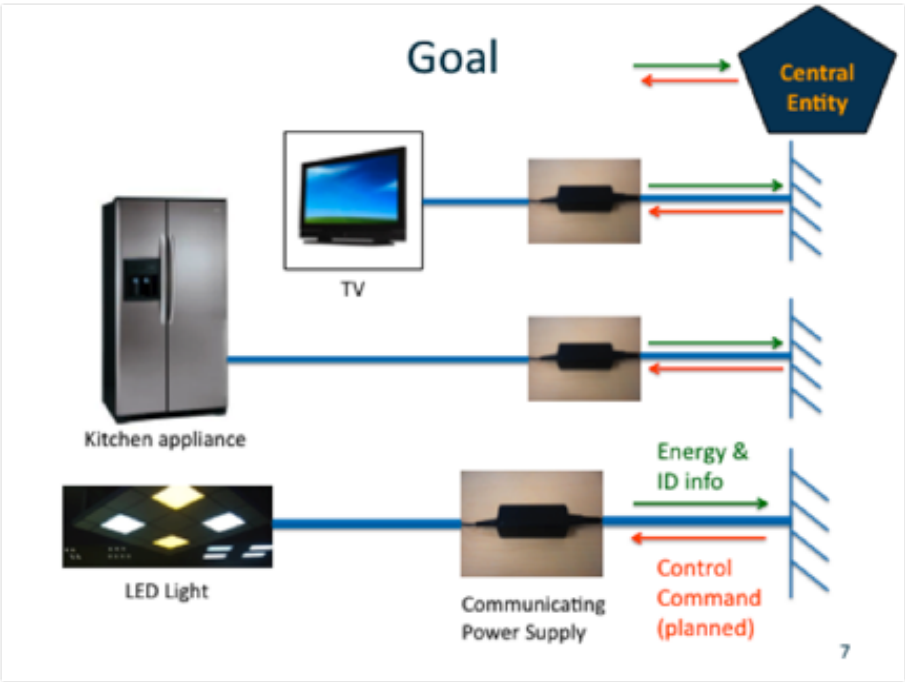

Source: LBNL

Ideally, the communicating power supply would also be able to receive commands to shut off or switch on power.

The approach was to directly incorporate these measurement and communication features into power supplies as part of the original manufacturing process, instead of as a retrofit. Each power supply or device will be assigned a unique identifier that can be recognized by a monitoring/management system (the "central entity" in Figure 1). The power supply will measure energy use, and transmit this data to a central entity.

These capabilities will make it possible to easily monitor energy use of individual appliances and other energy-using equipment in buildings and identify opportunities for savings. These same features may also be exploited in other ways to provide new applications that we can't predict. We sought to demonstrate in this project a "proof of concept" by designing, fabricating, and testing a communicating power supply that could, ultimately, be scaled-up to mass production.

The research team worked with two key manufacturers to ensure that the solutions were technically feasible with strong market potential, and to speed progress through manufacturing and adoption pipeline. Power Integrations (based in San Jose, CA) is one of the world's largest designers and providers of power supply solutions. A few billion of Power Integrations' products are connected to new electronic devices every year. Power Integrations understands the technical, economic, and business aspects of high efficiency power supplies. ARM (a UK-based firm with research facilities in Silicon Valley) is the industry's leading supplier of

microprocessor technology, offering a wide range of microprocessor cores. Billions of ARM processors are powering new devices each year. ARM provided the measurement and processing electronics; trade show floor space (a type of cost share); developed the graphic user interface (GUI) for the web that ran on the tablet for data display; and consulted on the development of the communicating power supply throughout project. In short, these firms were ideal collaborators because of their focus on solutions that could scale up to billions of products.

In this report, the design and development of the prototype communicating power supply was described, followed by measurements of the prototype's performance in realistic conditions. The research team also describes future work necessary to take the communicating power supply from prototype to mass production and incorporation in many products.

CHAPTER 2:
Design Considerations for the Communicating Power Supply

LBNL surveyed the literature to develop design considerations for the two principal features of the communicating power supply: energy measurement and communications. The goal was to determine the most feasible means of obtaining power measurements. The research team then considered various options for communicating the information from the power supply to the central entity. LBNL assumed that the innovations must take place inside the power supply; for that reason, the features of modern power supplies were investigated first.

2.1 Features of Power Supplies

Figure 2 shows a conceptual diagram of a switched-mode power supply (SMPS). The SMPS takes alternating current (AC) input from the mains power and transfers power efficiently to a direct current (DC) load, such as a television. The SMPS design provides a regulated output voltage while dissipating significantly less power than a linear power supply.

Figure 2: Conceptual Diagram of a Switched-Mode Power Supply

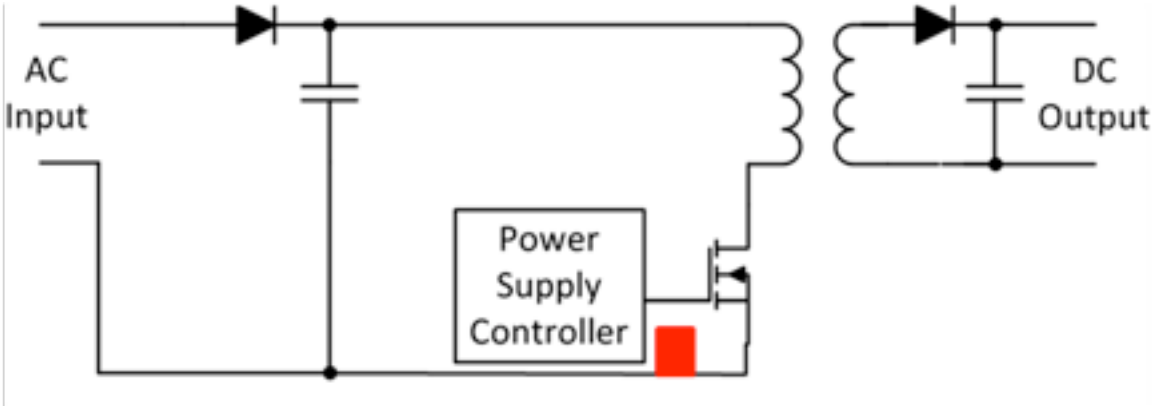

Source: LBNL

There are four stages of SMPS operation to produce a regulated voltage output from the mains power AC input. The first stage is rectification, converting the input to an unregulated DC voltage, with a diode rectifier and large filter capacitor. The second stage is an inverter that converts the DC voltage to a variable frequency and duty cycle AC signal in the range of tens to hundreds of kilohertz. This switching is implemented with a MOSFET amplifier. The third stage is voltage conversion and isolated output rectification. The inverted AC signal drives the primary winding of a high-frequency transformer, which converts the voltage up or down to the required output level on the secondary winding. In order to produce a DC voltage, an output rectifier is implemented with diodes and a filter consisting of inductors and capacitors. The fourth stage is output voltage regulation. A feedback circuit monitors the load characteristics and provides information to the control circuit so that the frequency and duty cycle of the switching can be adjusted.

2.2 Potential Interfaces

Because the switching frequency and duty cycle are adjusted based on the power used by the load, these variables are useful for determining the mains power being used.

The primary alternative is to perform traditional power measurement where the input voltage and frequency signals are sampled at a high rate (6000 samples per second or higher) and then each sample of voltage is multiplied by the corresponding current sample. These products are integrated over time to determine power. This method is both highly effective and accurate, but it is also much more expensive to implement. Furthermore, it requires high quality and high speed analog input capability. Using the pulse width modulation signal (PWN) requires just a single digital input and timing circuit.

2.3 Communication Strategies

Power supplies can be plugged into any outlet in a building, but wired communication (e.g., Ethernet, RS-485, etc.) is often not available close to the power outlet. This is particularly true in homes, but it is also commonly true in commercial and industrial sites. Therefore it is critical that the communication strategy is independent of traditional wired communication infrastructure. The two most promising technologies for communicating power supplies are wireless communication and power line carrier communication.

Wireless communication relies on the use of a radio transmitter at one node and a radio receiver at the other. The transmitter sends high frequency (typically hundreds of megahertz or higher) energy to an antenna where this energy radiates into space. The energy is modulated by either changing the amplitude, phase, frequency, or a combination of these three to encode the desired information. The common wisdom is that lower frequencies penetrate walls and other obstacles better, leading to longer communication range at lower power; however experiments in real environments have not found a significant difference between lower and higher frequency systems in typical building construction. Real differences are seen when penetrating high density materials (e.g., reinforced concrete). Radios, especially as frequency increases, can be contained almost entirely on a single silicon chip with only an external timing reference (i.e., crystal), antenna, and a handful of low-cost passive components required for operation. Radios can be easily designed to be bi-directional, can co-exist with other wireless systems in the same space, and can provide low or high data rates at varying power consumption levels and communication ranges. Given the moderate to high density of devices present in a building, a wireless communicating power supply is likely to be able to have a communication range that touches several nearby devices.

Power line carrier communication (PLC) uses the existing power distribution wiring in a building as the communication medium. A transmitter on one node sends information to a receiver at another node by modulating voltage spikes onto the power line AC voltage. This technology does not have the long history or the tremendous industrial investment of wireless communication, but it has come a long way in the last 20 years. PLC solutions have had reliability problems due to the noisy nature of power lines, but they also can enable communication over large distances with no new infrastructure. The primary issue with PLC is

that a significant number of large and expensive off-chip components are required for operation (e.g., transformers, high-voltage passives) along with a timing reference and low-voltage passives. It is possible that with increasing market growth, the cost of these components may decrease significantly.

2.4 Communication Protocols

Table 1 lists communication protocol options divided into wireless, PLC, and hybrid communication groups. Hybrid communication combines wireless and PLC communication together to enhance reliability. From this table, we see that there are many options available that can provide a solution without developing a new protocol or standard. However, this diversity in standards also means there is no obvious choice or market winner among the listed technologies.

Table 1: Communication Protocols

Type	Standard	Advantages	Disadvantages
Wireless	WiFi (IEEE 802.11)	Very common, excellent interoperability, established security, IP based	High cost, relatively high power
	Zigbee	Low cost, some interoperability, high market potential	Interoperability issues remain, security issues,
	6LoWPAN CSMA	IP based, low cost, simple software	Limited commercial use, unproven reliability
	6LoWPAN TSCH	IP based, low cost, high reliability	Limited commercial use
	Z-wave	Low cost, good interoperability	North America only, closed standard
	433MHz Wireless	Very low cost.	North America only, non-standard,
Power line carrier	IEEE 1901 (Home plug AV)	IP based, good reliability	High cost, high power
	IEEE 1901 (Home plug Green PHY)	IP based, good reliability	Moderate cost
Hybrid	X10 (PLC, wireless)	Established standard, low cost	Poor reliability
	INSTEON (PLC, wireless)	Established standard, enhanced reliability	Moderate cost
	G.hn (PLC, coax, twisted pair)	Flexible, enhanced reliability.	Uncommon, high cost and unknown power

Source: LBNL

We pursued an IP-based solution based on the belief that people will benefit when more devices are on IP networks (i.e., can communicate using the same models and protocols as the Internet). We focused on wireless solutions, and also explored low-cost PLC communication such as IEEE 1901 Homeplug Green PHY.

CHAPTER 3:
Prototype Development

3.1 Introduction

The development of the communicating power supply and the network behind is described showing the entire network ecosystem in which the communicating power supply operates (Figure 3). The figure includes two products with communicating power supplies and a central entity which receives signals from the two communicating power supplies.

Figure 3: Network With Communicating Power Supply

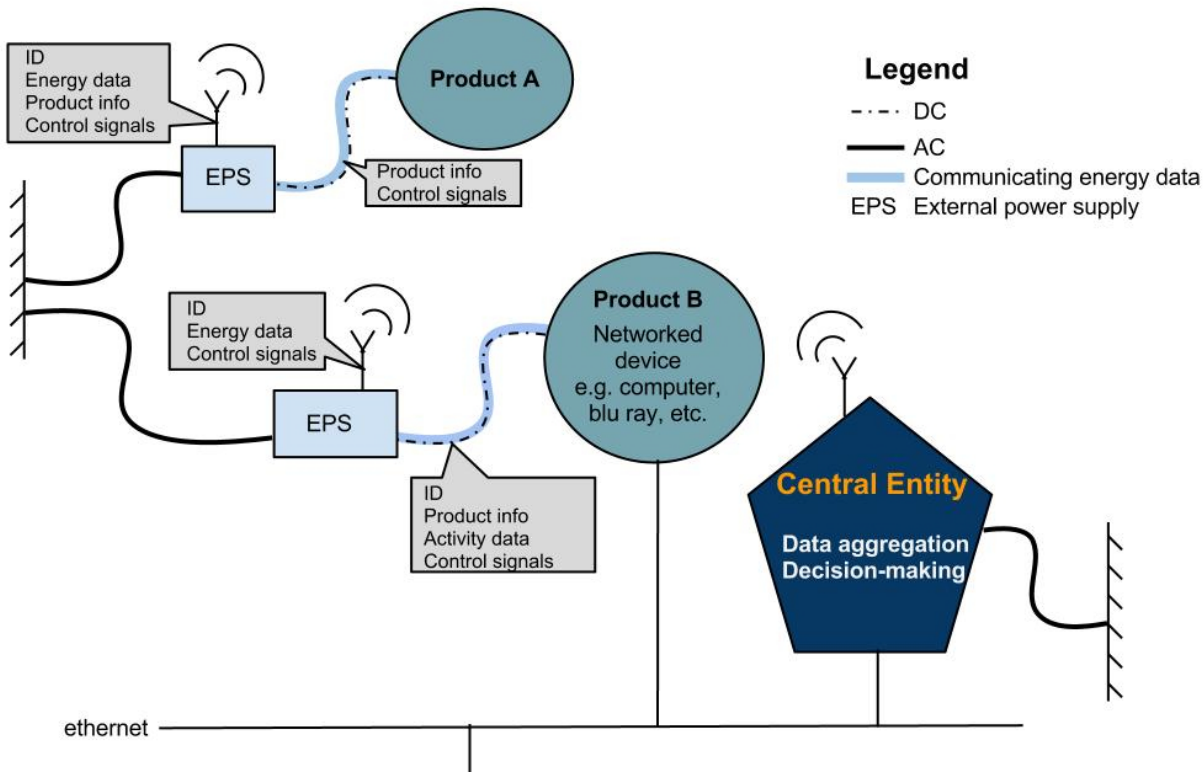

Source: LBNL

The component contributions of Power Integrations and ARM are shown symbolically in Figure 4.

Figure 4: Contributions From Power Integrations and ARM

Source: LBNL

The most feasible means of measuring power consumption were investigated first. The second step involved developing communications capability. Finally, LBNL developed a network capability.

3.2 Power Measurement

The goal was to measure power use in a way that was reasonably accurate but technically simple to implement. A 10 percent measurement error was acceptable; these measurements were not expected to be used for revenue purposes. The technical constraint was no significant modification of the power conversion hardware and design. LBNL included a design criteria that the additional components and modifications must be very cheap (in mass production).

Power Integrations provided a power supply module to facilitate measurements (Figure 5).

Figure 5: Prototype Power Measurement Setup

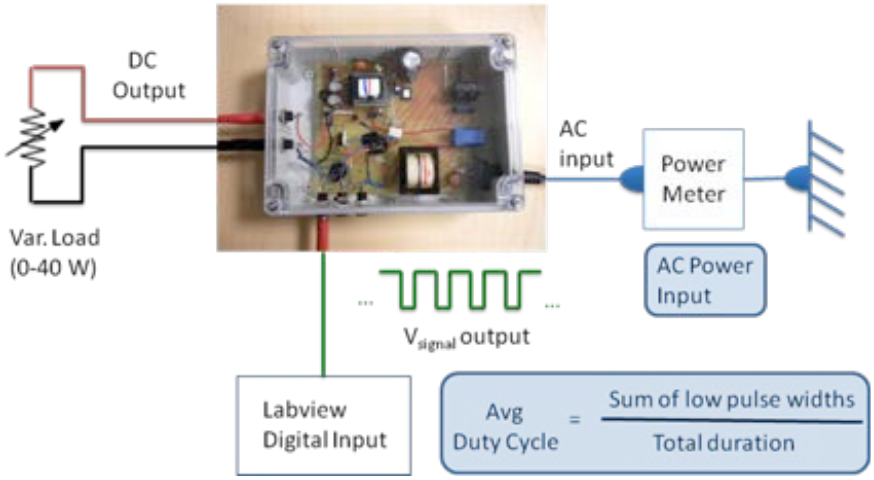

Source: LBNL

The cable on the right goes to the wall socket. The outputs on the left provide 12 V to drive a test load. The cable at the bottom is used to measure the switching frequency signal from the power supply controller. The innovation in this project is the capability to measure power consumption and communicate this information to other devices in the building. A microcontroller will be used to detect the switching frequency signal, and this signal will be used to infer the power consumption of the power supply.

Due to limitations in the prototype power supply design, there was no access to the signal driving the switching transistor. Instead, LBNL had access to the output of the transistor (i.e., the drain voltage) and used the pulse width modulation (PWM) signal at the FET drain and the rectified input voltage as our two variables for estimating power. Representative oscilloscope traces of the voltage are shown in Figure 6 for low and high loads.

Figure 6: Representative Oscilloscope Traces

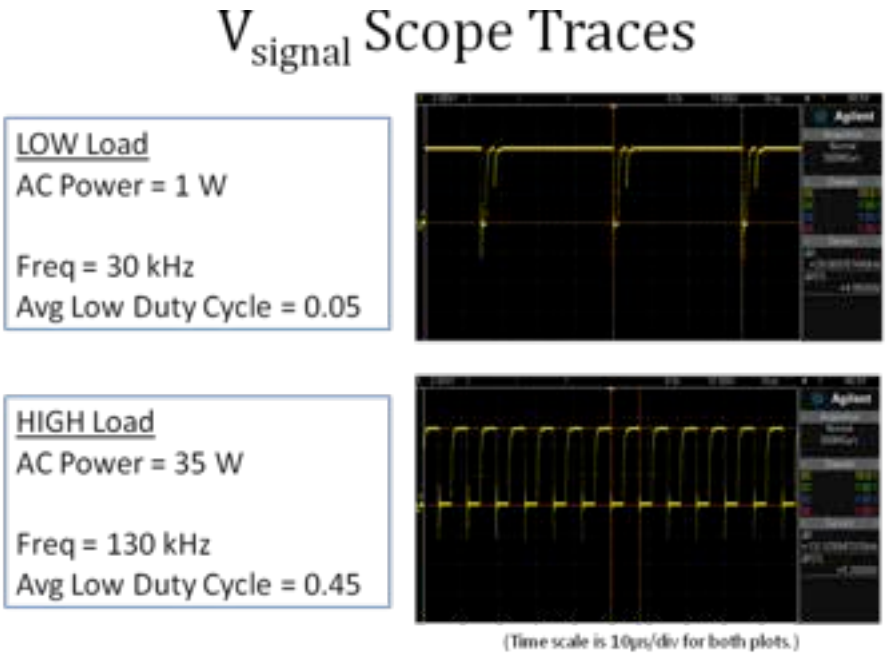

Source: LBNL

The duty cycles were then compared to the measured power entering the module. The results of 20 measurements are shown in Figure 7.

Figure 7: AC Power vs. Average Duty Cycle

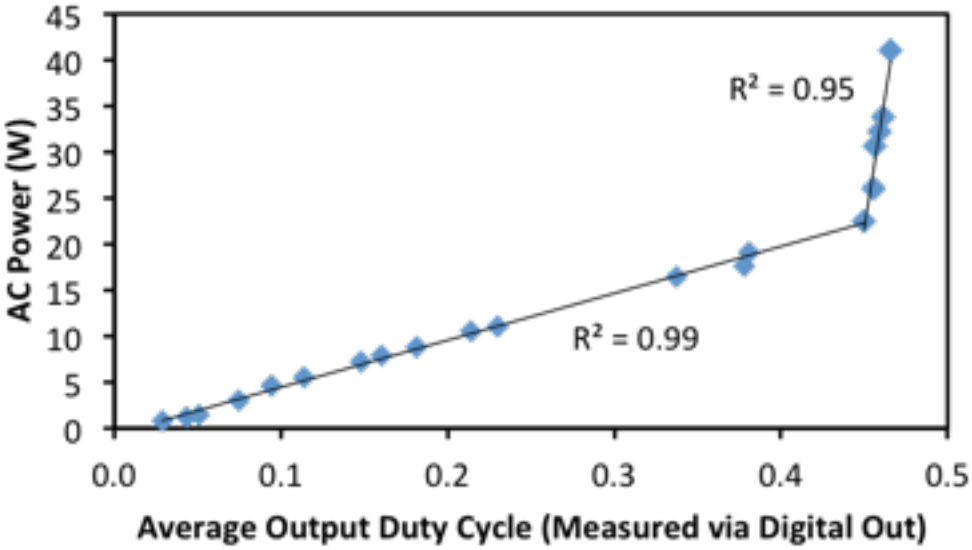

Source: LBNL

The plot demonstrates that the relationship between duty cycle and power is linear over a wide power range (0 to 25W). A second linear relationship applies for the range of 25 to 40W. We conclude that average duty cycle can be used to accurately estimate power use over the unit's range of operation.

A second power supply module was fabricated to facilitate connection to communications components (Figure 8).

Figure 8: Second Generation Prototype

Source: LBNL

3.3 Communications Aspects

The second major feature of the communicating power supply is communication of power measurements to the outside world. The communicating power supply ecosystem consists of the five components described below.

3.3.1 Individual Device Nodes

These endpoint nodes, based on mBed hardware (Figure 9), measure the device's power consumption and send that information to the hub. In addition, these nodes receive control inputs from the hub and relay those signals to the devices. All communication between the nodes and the hub is wireless. LBNL used the Nordic Semi nRF21L01+ wireless radio for the nodes and the hub. Many other wireless and wired network options are compatible with mBed.

Figure 9: ARM mBed Board

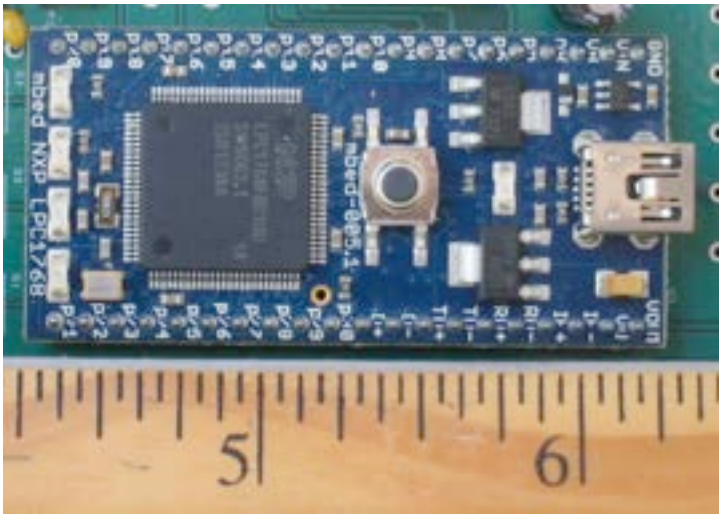

Source: LBNL

3.3.2 Hub

The hub acts as the network traffic controller. It receives energy-use information from the nodes and sends control information to the devices. In addition, it ensures that all nodes are active and connected to the network. If the hub detects that nodes have been dropped, it switches its broadcast channel and attempts to reconnect to the nodes. The hub has a serial connection to an ARM-based Raspberry Pi,[1] which is connected to the Internet. The hub relays the node energy-consumption information to the Raspberry Pi and receives control inputs.

3.3.3 Raspberry Pi

The Raspberry Pi is connected to both the local 'node' network and the Internet. It is not technically necessary for the Raspberry Pi to be a component in this configuration. It is possible to connect the mBed to the Internet and, in turn, make each component in this system based primarily on the mBed platform. However, because of the ease with which the Raspberry Pi could be configured to communicate with both the mBed hub and the Internet based data reporting system, it was included in the design for simplicity. Its inclusion also illustrates how mBed-based systems can easily be configured to communicate with other hardware.

3.3.4 Cloud Data Storage and Web Hosting

The Raspberry Pi reports the energy-use information to an Internet-connected server based on LBNL's campus. The server archives this data and allows other programs (such as the one running on the tablet in demonstrations) to access and display the data. This same server sends the control signals to the Raspberry Pi.

The server can be configured to send controls 1) automatically, 2) based on user inputs, or 3) some combination of the two. Our demonstration showed a combination of user inputs and automation. For example, if a person used the tablet user interface (UI) to turn off the TV, the server would automatically signal the Blu-Ray player to shut down, as well. This type of automation is representative of the other energy-savings measures enabled by communicating power supplies.

3.3.5 Tablet User Interface

This system component is the main point of interaction for the user. The ARM-designed UI used at Design West showed power-consumption (real time and cumulative) for each device and allowed conference attendees to control each of the devices with touch buttons. The TV and Blu-Ray player could be turned on and off through this UI and the LED light's brightness could be controlled.

1 http://www.raspberrypi.org/

A flow diagram illustrating the software logic for the communicating power supply system is shown in Figure 10.

Figure 10: Software Logic Diagram

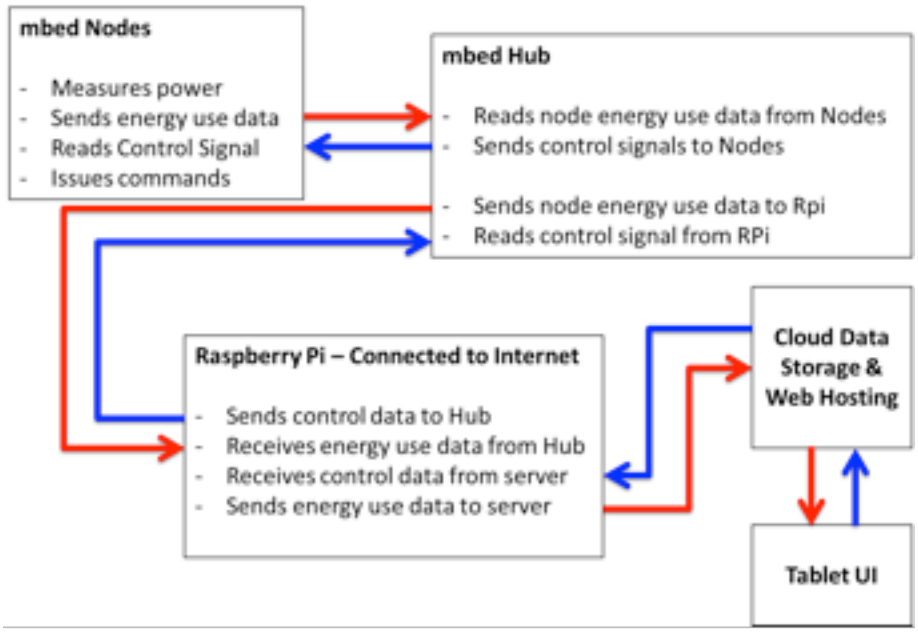

Source: LBNL

In typical hardware prototype situations, moving from the conceptual phase to a working demonstration is a costly, time-consuming process. This is due mostly to the effort inherent in each development phase: hardware design, testing, refining, and retesting. The mBed platform significantly compresses this process and allows much more streamlined hardware prototyping. A concurrent effort to design and build the hardware components was completed during that same time frame. The flexibility of the mBed hardware platform and the extensive availability of pre-built software libraries enabled this rapid prototype process with a minimal number of staff.

The complete ecosystem, along with three devices is shown in Figure 11.

Figure 11: Ecosystem with Three Communicating Power Supplies – TV, Blu-Ray, LED Light

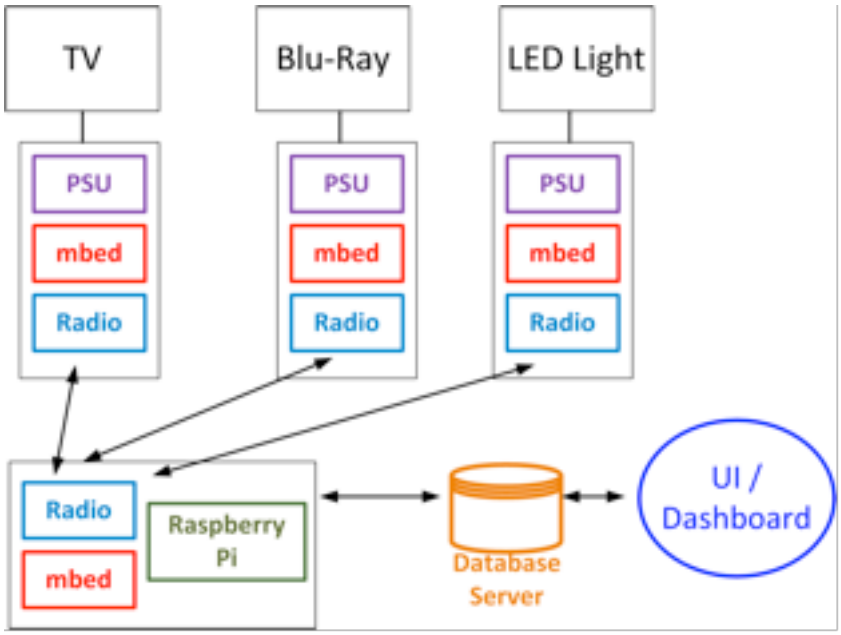

Source: LBNL

The system functioned as expected and the research team was able to simultaneously display power measurements from three products on the Dashboard. A sample display of measured and communicated power consumption on the Dashboard is shown in Figure 12.

Figure 12: Dashboard – Measured and Communicated Power Consumption

Source: LBNL

The system was robust enough for demonstration and exhibition in trade shows. One show was the Design West show in 2013. The Communicating Power Supply exhibit is shown in Figure 13.

Figure 13: Design West Display Kiosk

Source: LBNL

CHAPTER 4:
Energy Savings

Communicating power supplies save energy in two ways. First, they provide additional information to consumers to more carefully monitor consumption. This information will prevent unnecessary use and perhaps alert consumers to faults and incorrect operation. Second, the CPS controls usage by directly switching off equipment that otherwise would be drawing power.

This discussion is therefore divided into two parts. The first describes savings from improved information and awareness of energy using equipment. The second part surveys and then estimates the energy savings that can be achieved by more precise control of energy-using equipment. Both discussions assume that the CPS ecosystem is fully built into a large number of devices in the building. LBNL envisioned that consumers will be able to track consumption and to issue control commands through a smartphone or computer. In the future, specially designed applications might manage some of the more routine commands. These technologies are already available for some add-on metering/control units.

The communicating power supply targets devices with power supplies that convert 115 Volts AC into low-voltage DC power. These are principally plug-in devices. Pigg et al. (Pigg, Bensch, and Koski 2010) conducted a survey of over 50 mid-west homes and estimated that together these appliances represent 15 to 25 percent of total residential electricity use. Plug loads are responsible for a higher percentage in California homes. Heat pumps, electric water heaters, elevators, blowers and other high-power devices operate without these power supplies or use them only for their control circuitry. As a result, the energy consumption of many important end uses will not be directly affected by the CPS. However, the energy use of the controls of these devices can be monitored. Operating schedules and durations may be sufficient feedback to identify technical problems and stimulate repairs.

4.1 Energy Savings from Improved Feedback

The famous management consultant W. Edwards Deming once said, "You can't manage what you can't measure." The communicating power supply makes better management possible by providing a means of measuring something that was before not measurable.

Several researchers (Kempton and Montgomery 1982) have observed that consumers typically focus on visible energy-using products for energy saving efforts. But many appliances and pieces of equipment in buildings are enclosed in cabinets, in the basement, or otherwise not in plain view, so the extent of their energy use is not obvious. As a result it is as difficult for an occupant of a home as it isfor a manager of a commercial building to easily assess when or how much energy the hidden appliance is using.

Feedback can be provided at varying frequency and degrees of specificity. For example, a Norwegian study showed that consumers reduced their electricity use 10 percent when the frequency of the utility bills increased from once a year to monthly. More recently, studies

examined the impacts of energy consumption when the feedback is offered with greater detail. Darby (2008) surveyed studies of energy saving from improved feedback in homes. She found that the savings ranged from 5 to 15 percent as a result of direct feedback. Moreover, she found that these savings persisted for a considerable period of time. Most of these studies took place in Europe and the majority of savings were in the form of reduced space heating. It's not clear if these results apply to the CPS since the CPS is primarily suited to electric devices and appliances with power supplies.

Ehrhardt-Martinez et al. (Ehrhardt-Martinez, Donelly, and Laitner 2010) surveyed the energy savings resulting from feedback technologies in the USA. They divided the programs into four categories of increasing level and speed of feedback. The savings ranged from 3.8% from enhanced billing to 12 percent for real-time measurement and feedback. The latter category is most appropriate for comparison with the communicating power supply. The authors further estimated that feedback programs, if broadly implemented throughout the United States, could save the equivalent of 100 TWh by 2030. Again, these estimates include substantial (though unspecified) savings in space heating, air conditioning (AC), and water heating, which are end uses where the CPS is unlikely to save much.

The programs examined by Ehrhardt-Martinez et al. typically employed whole-house meters. It was impossible to track appliance consumption (except, in some cases, heating, AC, or water heating). A communicating power supply can provide real-time consumption data for every device. As a result, it's possible to identify precisely which device is drawing power (and how much). This additional level of precision will simplify problem identification, such as unusually high energy use or operation when not needed. There's no assurance that consumers will ultimately act on this information but the high precision will increase their confidence that they are attacking the actual problem. It is reasonable to expect additional energy savings through consumer feedback when a CPS is installed.

4.2 Energy Savings from Switching Off Equipment Performing No Useful Function

Meyers et al. (Meyers, Williams, and Matthews 2010) estimated that about 3 percent of total residential electricity use is wasted by electronic products and other small products that are not switched off even though they are not performing useful services. This estimate appears low given results from careful examinations of individual homes and commercial buildings.

Pigg et al. estimated that about 500 kWh/year – 5 percent of total residential electricity use – could be saved by a combination of consumer information and smart power strips. Parker et al. (Parker et al. 2010) measured consumption and savings in two homes with instantaneous power meters designed to provide the occupants feedback. In one home, they installed switches on specific circuits to allow the occupants to switch off appliances with standby power consumption. (These appliances included lights, office equipment, and other consumer electronics.) This arrangement crudely simulated the capabilities of communicating power supplies. The occupants were able to reduce fixed loads in the home by 90W, which corresponds to about 800 kWh/year.

Acker et al. (Acker, Duarte, and Van Den Wymelenberg 2012) examined plug loads in several commercial buildings. They estimated that plug loads could be reduced 20 percent using smart power strips and education of occupants. They noted difficulties in achieving these savings in commercial buildings. The communicating power supply would make these savings more likely to be achieved by facilitating both identification and control of unneeded equipment.

4.3 National Savings from Communicating Power Supplies

LBNL estimated the national electricity savings from communicating power supplies in Table 2. The starting point is a 2011 estimate of energy consumption in buildings by end use, prepared by the Energy Information Administration. Estimates of potential savings from installation of communicating power supplies were applied to each end use. The savings include those from enhanced feedback and individual controls.

Table 2: Estimates of U.S. Electricity Savings from Communicating Power Supplies

End Use	Primary Electric (Quads)[2]	Estimated savings (%)	Calculated Savings (Prim.Quads)	Electricity Savings (TWh/year)
Space Heating	1.77	0.5%	0.01	0.9
Lighting	4.65	3.0%	0.14	13.5
Space Cooling	4.60	0.5%	0.02	2.2
Water Heating	1.71	0.5%	0.01	0.8
Refrigeration	2.43	0.5%	0.01	1.2
Electronics	1.94	15.0%	0.29	28.3
Ventilation	1.62	1.0%	0.02	1.6
Computers	1.14	3.0%	0.03	3.3
Wet Cleaning	0.98	0.1%	0.00	0.1
Cooking	0.41	0.2%	0.00	0.1
Other	5.30	5.0%	0.27	25.7
Adjust to SEDS	1.90	0.1%	0.00	0.2
Total	**28.46**		**0.80**	**77.9**

Source: LBNL

2 From U.S. Department of Energy, *2011 Buildings Energy Data Book* http://buildingsdatabook.eren.doe.gov/default.aspx

Overall potential savings from the installation of communicating power supplies are about 3 percent of total building electricity use. The largest contributor to savings – 15 percent – will occur in the Electronics end use, most of which are plug loads. The CPS will also improve the occupants' ability to monitor HVAC end uses, though not necessarily to control them. For that reason, LBNL assumed that very small savings – 0.5 percent – will be achieved. This will mostly occur through identification of defective equipment, incorrect schedules, or minor housekeeping.

CHAPTER 5:
Conclusions and Future Work

The objective of this project was to prove the technical feasibility of a communicating power supply. This was accomplished and demonstrated in both laboratory and trade-show environments. The system easily accommodated diverse electrical products, including lights and consumer electronics whose power consumption ranged from approximately 0 to 20 watts. For the communicating power supplies, the error ranges from 2 to 5 percent of reading for values over 20W and +/- 1W at lower levels. Accuracy and unit-to-unit variability is still undefined because of the limited number of units.

Exceeding the original project objectives, we also demonstrated that it was possible to transmit signals to control the product, via the communicating power supplies. Thus, true, two-way communication was established. Additionally, this is valuable because the products already sleep at <1W, and they retain their normal functionality. These features greatly increase the potential applications and energy savings capabilities for the communicating power supply.

By using mBed and other open-source systems, LBNL was able to design and construct prototype with relatively few resources and staff. Furthermore, the design allows for easy adoption by manufacturers and expansion to mass production.

The ultimate goal is to incorporate the communicating power supply in all products equipped with switched mode power supplies. This goal can be achieved only if the cost is greatly reduced and incentives are introduced to make the installation attractive to both manufacturers and consumers.

For manufacturers, further improvements in hardware and software are still required to insure that the system is as reliable and robust as the rest of the power supply in which it will be installed. The major steps are – as always in electronics development – miniaturization, reduction in parts count, and standardization. For example, products must be able to self-identify on the network in a standard way after they are plugged into a building's electrical system.

Even then, the communicating power supply will still cost more than a "dumb" power supply. For that reason, other interested entities – Energy Star, utilities, regulators – may initially offer incentives to overcome manufacturer reluctance.

Consumers also require an environment to support the communicating power supply in order to extract the greatest possible benefit. This project enabled the consumer to observe energy use of essentially all electrical devices in their homes (or commercial buildings), however, higher priority services must be developed. These higher priority services could include fault detection, safety alerts, and inventory management. Ideally, a new service will arise that is so attractive that consumers will want to pay extra for communications and control functionality and energy monitoring becomes essentially free.

GLOSSARY

Term	Definition
AC	Alternating current
DC	Direct current
FET	Field effect transistor
MOSFET	Metal–oxide–semiconductor field-effect transistor is a transistor used for amplifying or switching electronic signals.
PLC	Power line carrier
PWM	Pulse width modulation
SMPS	Switched mode power supply
UI	User Interface
USB	Universal Serial Bus
Zigbee	A suite of high level communication protocols built from small, low-power digital radios to create personal area networks, and based on an IEEE 802.15 standard.

REFERENCES

Acker, Brad, Carlos Duarte, and Kevin Van Den Wymelenberg. 2012. "Office Space Plug Load Profiles and Energy Saving Interventions." In *The Proceedings of the ACEEE Summer Study in Buildings*. Pacific Grove (Calif.): American Council for An Energy Efficient Economy (Washington, D.C.).

Darby, Sarah. 2008. "Energy Feedback in Buildings: Improving the Infrastructure for Demand Reduction." *Building Research & Information* 36 (5): 499–508. doi:10.1080/09613210802028428.

Ehrhardt-Martinez, Karen, Kat Donelly, and John Laitner. 2010. "Advanced Metering Initiatives and Residential Feedback Programs: A Meta-Review for Household Electricity-Saving Opportunities". Report No. E105. Washington, D.C.: American Council for an Energy Efficient Economy.

Kempton, Willett, and Laura Montgomery. 1982. "Folk Quantification of Energy." *Energy* 7 (10): 817–827.

U.S. Department of Energy, 2011 Buildings Energy Data Book http://buildingsdatabook.eren.doe.gov/default.aspx

APPENDICES

Appendix A: Communicating Power Supplies: Bringing the Internet to the Ubiquitous Energy Gateways of Electronic Devices

Appendix B: Adding Low-Cost Internet Connectivity and Control To Your Design

Appendix C: Development of a Communicating Power Supply to Assist in Energy Monitering and Management

This appendices are available as a separate volume, publication number CEC-500-2015-038-AP.