California Energy Commission
Energy Research and Development Division

FINAL PROJECT REPORT

Systems Integration of Containerized Molten Salt Thermal Energy Storage in Novel Cascade Layout

California Energy Commission

Edmund G. Brown Jr., Governor

October 2015 | CEC-500-2016-006

PREPARED BY:
Primary Author(s)
Matthieu Jonemann
Harold Russell
Ross Blair
Justin Raade
Claire Ames

Halotechnics Inc.
6250 Overland Avenue
Emeryville, CA
Phone: 510-984-6918 | Fax: 510-547-2624
http://www.halotechnics.com

Contract Number: EPC-14-004

PREPARED FOR:
California Energy Commission

Prab Sethi
Contract/Project Manager

Aleecia Gutierrez
Office Manager
Energy Generation Research Office

Laurie ten Hope
Deputy Director
ENERGY RESEARCH AND DEVELOPMENT DIVISION

Robert P. Oglesby
Executive Director

DISCLAIMER

This report was prepared as the resul.t of work sponsored by the California Energy Commission. It does not necessarily represent the views of the Energy Commission, its employees, or the State of California. The Energy Commission, the State of California, its employees, contractors, and subcontractors make no warranty, expressed or implied, and assume no legal liability for the information in this report; nor does any party represent that the uses of this information will not infringe upon privately owned rights. This report has not been approved or disapproved by the California Energy Commission nor has the California Energy Commission passed upon the accuracy or adequacy of the information in this report.

PREFACE

The California Energy Commission Energy Research and Development Division supports public energy research and technology development to improve Californians quality of life by bringing environmentally safe, affordable and reliable energy services and products to the marketplace.

The Electric Program Investment Charge (EPIC) Program was created by the California Public Utilities Commission to support investments in clean energy technologies providing benefits to the ratepayers of Pacific Gas and Electric Company, San Diego Gas & Electric Company and Southern California Edison Company.

Through this program, the Energy Commission provides funding for applied research and development, technology demonstration and deployment, and market facilitation of clean energy technologies and approaches for these areas:

- Design zero-net energy residential homes and commercial buildings
- Rapidly increase high-efficiency businesses
- Expand low-carbon localized generation
- Develop sustainable bioenergy systems
- Electrify the transportation system
- Create a highly flexible and robust energy grid infrastructure

Unique Cascade Layout for Molten Salt Thermal Energy Storage Container System is the final report for the Systems Integration of Containerized Molten Salt Thermal Energy Storage in Novel Cascade Layout project. Contract Number EPC-14-004 conducted by Halotechnics. The information from this project contributes to Energy Research and Development Division's Renewable Energy Technologies Program.

For more information about the Energy Research and Development Division, please visit the California Energy Commission's website at www.energy.ca.gov/research or contact the California Energy Commission at 916-327-1551.

ABSTRACT

The necessity for concentrated solar power plants continues to increase due to the demand for efficient, renewable energy. Solar power plants can generate electricity using solar thermal energy, which is stored in tanks. Constructing a 10 to 50 megawatt concentrated solar power plant is often expensive due to high tank construction costs. To reduce these costs, Halotechnics, a company which specializes in economically viable renewable energy storage, sought to develop a multiple tank, high temperature molten salt storage system. Halotechnics proposed to shift manufacturing from the field to a controlled factory setting, thereby reducing costs and making concentrated solar power beneficial at small scale. The design efforts focused on the tanks themselves and the trade-off between high performance, low cost manufacturing, and an effective control system. The process design and the mechanical design of all major components were completed, along with specified control system requirements which included the use of three tanks, the minimum number prescribed to evaluate the operation and viability of a multiple tank system. Unfortunately, the program was terminated after 10 months prior to the procurement of any hardware, due to insufficient commercial traction from customers in the concentrated solar power industry and the emergence of photovoltaic technology. The development of a multi-tank thermal storage system is technically achievable with minimal risk, however, at such small scale, the cost of an optimized concentrated solar power system exceeds that of a comparable photovoltaic system.

Keywords: CSP, concentrated solar power, thermal storage, energy storage, molten salt

Please use the following citation for this report:

Jonemann, Matthieu; Russell, Harold; Blair, Ross; Raade, Justin; Ames, Claire. Halotechnics Inc. 2015. *Unique Cascade Layout for Molten Salt Thermal Energy Storage Container System.* California Energy Commission. Publication number: CEC-500-2016-006.

TABLE OF CONTENTS

Page

Preface 3

Abstract 4

Table of Contents 5

List of Figures 7

List of Tables 7

Executive Summary 8

Introduction 8

Project Purpose 8

Project Results 9

Benefits to California 9

CHAPTER 1: System Design 11

CHAPTER 2: Mechanical Design 18

Molten Salt Tank 18

Swing Tank Design 18

Design Requirements 20

Preliminary Insulation Design and Thermal Assessment 22

Molten Salt Pumps 26

Scope 26

Normal Operating Conditions 27

Pump dimensions / sump integration 27

Pump / Sump sealing 27

Materials of Construction (minimum material requirements) 28

Shutdown Frequency / Thermal Cycling 28

Efficiency 28

Bearing / Lube system 28

Pump CAD 29

Pump Sumps 30
Heat Exchanger 31
Molten Salt Heater 32
CHAPTER 3: Instrumentation and Control Design 34
Instrumentation Design 34
Piping 34
Valves 34
Salt Flow Meter 36
Control System Design 37
Glossary 38
References 39
APPENDIX A: Piping and Instrumentation Diagram A-1
APPENDIX B: IO List B-1
APPENDIX C: Revised Halotank Design C-1
APPENDIX D: Bill of Materials D-1
APPENDIX E: Shipping Container halotank Shell E-1
APPENDIX F: Detail of Seismic Support F-1
APPENDIX G: Halotank Assembly Procedure G-1
APPENDIX H: Software Requirements Specification H-1
CONTROL SYSTEM DESCRIPTION H-1
CONTROL SYSTEM H-1
LOAD CONTROL STRATEGIES H-2
CONTROL LOOPS H-2
CONTROL SYSTEM FEATURES H-3
CONTROL MODES H-9
SYSTEM STARTUP AND OPERATING STATES H-9
ACTION OF FAULTS AND STOPS H-10

LIST OF FIGURES

Page

Figure 1: Two-Tank Thermal Storage vs. the Halotank 9
Figure 2: Peak vs. Off-Peak Emissions 10
Figure 3: Flow Diagram of the Charging of a Three-Tank Thermal Storage System 11
Figure 4: Process Flow Diagram (PFD) 13
Figure 5: Facility Floor Plan 17
Figure 6: First Version of the Halotank at the Halotechnics Facility 20
Figure 7: Microtherm FreeFlow Thermal Conductivity 23
Figure 8: Comparative Thermal Conductivities of Various Insulation Materials 24
Figure 9: Powder-Fill Halotank 25
Figure 10: Section view of Powder-Filled Halotank 26
Figure 11: Hot and Cold Pump CAD Model 29
Figure 12: Hot and Cold Sump CAD Model Detail 30
Figure 13: Hot and Cold Pump Assembly CAD Model 31
Figure 14: Counter Flow Air HX 32
Figure 15: FX CAD 33
Figure 16: Schematic of Molten Salt Gate Valve (With Manual Actuator) 35
Figure 17: Flexim Ultrasonic Flowmeter Dimension Sketch 36
Figure 18: Flexim WI-400 Temperature Profile 37

LIST OF TABLES

Page

Table 1: Lifetime Emissions Reduction for CSP with Thermal Energy Storage 10
Table 2: Thermo-Physical Properties of 60-40 Nitrate Salt 14
Table 3: Microtherm FreeFlow technical data 22
Table 4: Thermal Recycling 28

EXECUTIVE SUMMARY

Introduction

Recent changes in the global climate have necessitated aggressive renewable energy mandates, especially in California. The California Public Utilities Commission's Renewables Portfolio Standard mandates that, by 2020, 33 percent of all energy production within the state must be from renewable energy sources. The California Public Utilities Commission is also requiring the State's investor-owned utilities to procure 1,325 megawatts (MW) of grid scale energy storage by 2024. With the increase in variable energy from wind and solar sources, more energy storage is needed to maintain grid reliability. Since concentrated solar power plants not only convert solar thermal energy into electricity, but also store energy, they play a significant role in both renewable energy and storage objectives for California. Thermal energy storage has been tested commercially using molten salt at a 1,049˚F (565 ˚C) maximum temperature at several concentrated solar power plants over the past 15 years. Even though the tanks are fairly efficient and are capable of containing 30,000 metric tons of molten salt, further cost reductions are required in order to increase the competitiveness of concentrated solar power (CSP).

Project Purpose

Conventional solar thermal energy storage tanks currently require a large amount of material and space to successfully reserve energy. This project sought to further enhance the efficiency and scale of solar thermal energy storage tanks to meet the requirements of renewable energy mandates. At the heart of Halotechnic's energy storage system there is a unique thermal storage design that uses a cascaded series of modular storage tanks. This design minimizes the required tank volume for desired energy storage capacity. The Halotank™ shown in Comparing the traditional field assembled two-tank thermal storage vs. a highly efficient, factory assembled, and modular approach. , uses a modified 40-foot shipping container which houses an insulated steel inner tank filled with molten salt. While most conventional tanks serve as either a hot tank or a cold tank, the Halotank can fulfil both functions. A single 40-foot container will contain approximately 60 tons of molten salt, which is equivalent to 6 megawatt hours (MWh) of thermal energy. This allows for flexibility when selecting the number of tanks required for a given application. For example, a 20 MW plant with four hours of storage requires a salt inventory of approximately 2300 tons. Whereas this specific scenario would require 38 hot tanks and 38 cold tanks, the same salt inventory could be contained using only 39 Halotanks tanks.

Figure 1: Two-Tank Thermal Storage vs. the Halotank

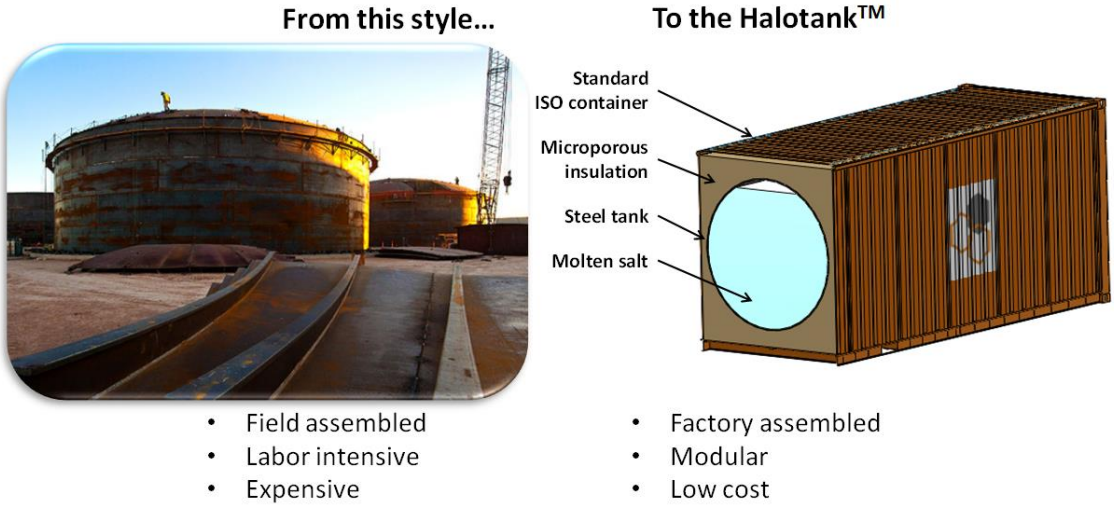

Comparing the traditional field assembled two-tank thermal storage vs. a highly efficient, factory assembled, and modular approach.

Project Results

The project started in January 2015 and ran for approximately 10 months. During this time, the team completed the preliminary design phase (which included the system and mechanical design) and the specifications document for the control system. Halotechnics terminated the project during the assembly-planning phase, before completion, due to insufficient commercial traction from customers in the concentrated solar power industry. Many concentrated solar power projects focusing on smaller plants have similarly been canceled or converted to photovoltaic technology. The remaining concentrated solar power projects focus on very large plant sizes with many hours of megawatt storage. Ultimately, the traditional two-tank design is lower in cost compared to the modular design developed in this project. Molten salt thermal energy storage could be used in a standalone system not associated with a concentrated solar power plant, however it would have to be scaled to a very large size (greater than 50 MW) in order to be cost competitive with projected battery costs. As a result, the researchers believe that the technology developed by Halotechnics will not sufficiently reduce the cost of small concentrated solar power plants to make them competitive in the marketplace.

Benefits to California

Had this project been completed and the technology deployed at scale, Halotechnics thermal storage system would have provided substantial benefits to California ratepayers by increasing reliability (reducing or shifting peak loads), lowering costs (eliminating price spikes), and increasing safety (reducing emissions).

In regard to increased reliability, thermal energy storage allows CSP plants to deliver energy during peak loads. The thermal energy is supplied via solar receiver with zero emissions, leading to significant emissions offsets as compared to a mix of peak plant

and base load generation. The researchers calculated a lifetime net offset of 0.23 tons of carbon dioxide per megawatt hour (CO_2/MWh) by integrating CSP with molten salt storage. Figure 2 details the results of the researcher's calculations which were applied over 12 daily hours (4 peak, 8 baseload) of emissions-free CSP generation.

Figure 2: Peak vs. Off-Peak Emissions

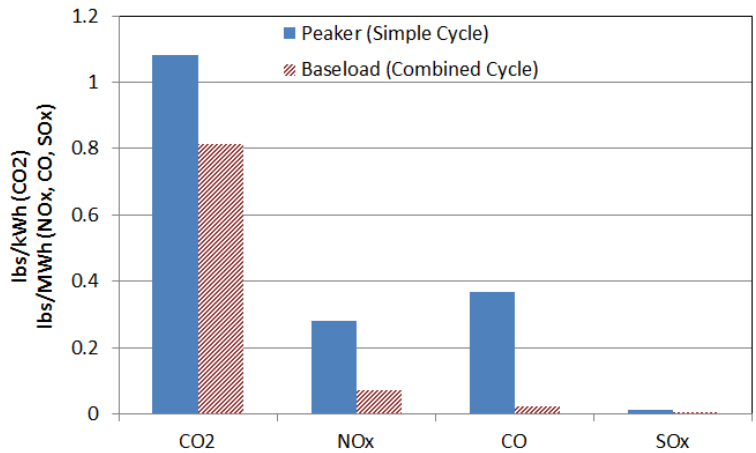

As for meeting the requirements of California's 2020 estimated energy demand (100,000 giga-watt hours [GWh]) and a 33 percent Renewable Portfolio Standard, storage-enabled CSP plants are projected to constitute 10 percent of California's renewable capacity (1255 MW at 30 percent blended renewables average capacity factor). These estimations result in a total emissions reduction of 74,500,000 tons of carbon dioxide (CO_2) over a 30 year plant life. This calculation can be repeated with other greenhouse gases. **Error! Reference source not found.** below summarizes total missions reductions. These assumptions are reasonably based upon California's renewable energy goals and data from reliable sources, including the California Energy Commission, the National Renewable Energy Laboratory, and the California Independent System Operator.

Table 1: Lifetime Emissions Reduction for CSP with Thermal Energy Storage

Lifetime CO_2 Offset (Million Tons)	Lifetime NO_x Offset (Thousand Tons)	Lifetime CO Offset (Thousand Tons)	Lifetime SO_x Offset (Thousand Tons)
74.5	11.5	11.4	0.630

CHAPTER 1:
System Design

The modular cascade thermal energy storage system (MCTES) is a three-tank sensible heat storage plant using molten nitrate salt as thermal storage and heat transfer fluid. It is designed to accept heat from an electric heater at a rate of 75 kilowatts (kW) for 6 hours, store the 450 kilowatt hours (kWh) of heat for 12 hours, and reject heat at a rate of 75 kW for 6 hours through a simulated steam generator. The salt is operated between the temperatures of 554˚F (290˚C) and 1049˚F (565˚C).

The basic operation of a three-tank system is outlined in Figure 3. At the start of the day, if tanks 2 and 3 are full of cold fluid and tank 1 is empty, cold fluid is withdrawn from tank 2, heated in the electric heater and placed in tank 1, which is empty. At about midday, tank 1 is full of hot fluid and tank 2 is empty. Cold fluid is then withdrawn from tank 3 and after heating is deposited in tank 2. At the end of the day, the fully charged multi-tank storage system contains hot fluid in tanks 1 and 2.

Figure 3: Flow Diagram of the Charging of a Three-Tank Thermal Storage System

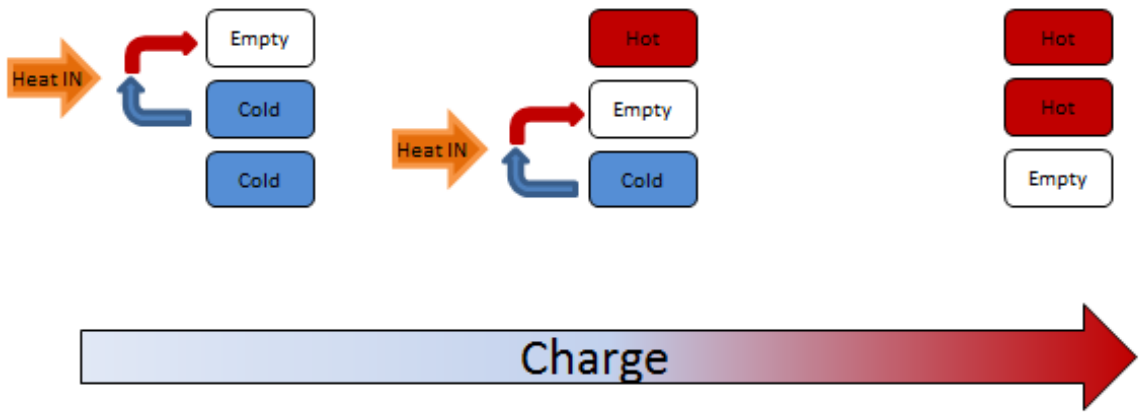

The molten salt is transported across the different parts of the system using vertical cantilever pumps. Two salt pumps are required in order for the system to operate (a hot and cold pump) as is the case with a traditional design. In the proposed modular design, the pumps are located in *sumps* that are external to the molten salt storage tanks. All the tank drains are manifolded and connected to the lower part of each pump sump. A valve at each tank drain and at each pump sump inlet directs the flow of salt out of either tank, and into either pump sump using gravity as a driving force. Only one drain valve and one sump inlet valve is open at a given time, which ensures that exactly one pump is supplied with salt from exactly one tank.

Following the heat input or heat rejection process, the salt is returned to one of the salt tanks in a similar fashion. All the tank return lines are manifolded and a valve in each tank return line controls the flow of salt into each tank.

The Process Flow Diagram (PFD) of the three-tank thermal energy system (TES) is presented in Figure 4, identifying heat flows into and out of the system, with corresponding mass flow rates of molten salt and cooling air to charge and discharge the system. The major equipment, shown on this diagram, includes three tanks, two pumps, two heat exchangers, and ten control valves. The “Piping and Instrumentation Diagram” shown in Appendix A was identifies all major equipment and interconnecting piping, as well as all the instrumentation required to monitor and control the system. It also shows the locations of the control valves, which are the primary mechanism for controlling the flow of salt to and from either one of the storage tanks in the system.

Figure 4: Process Flow Diagram (PFD)

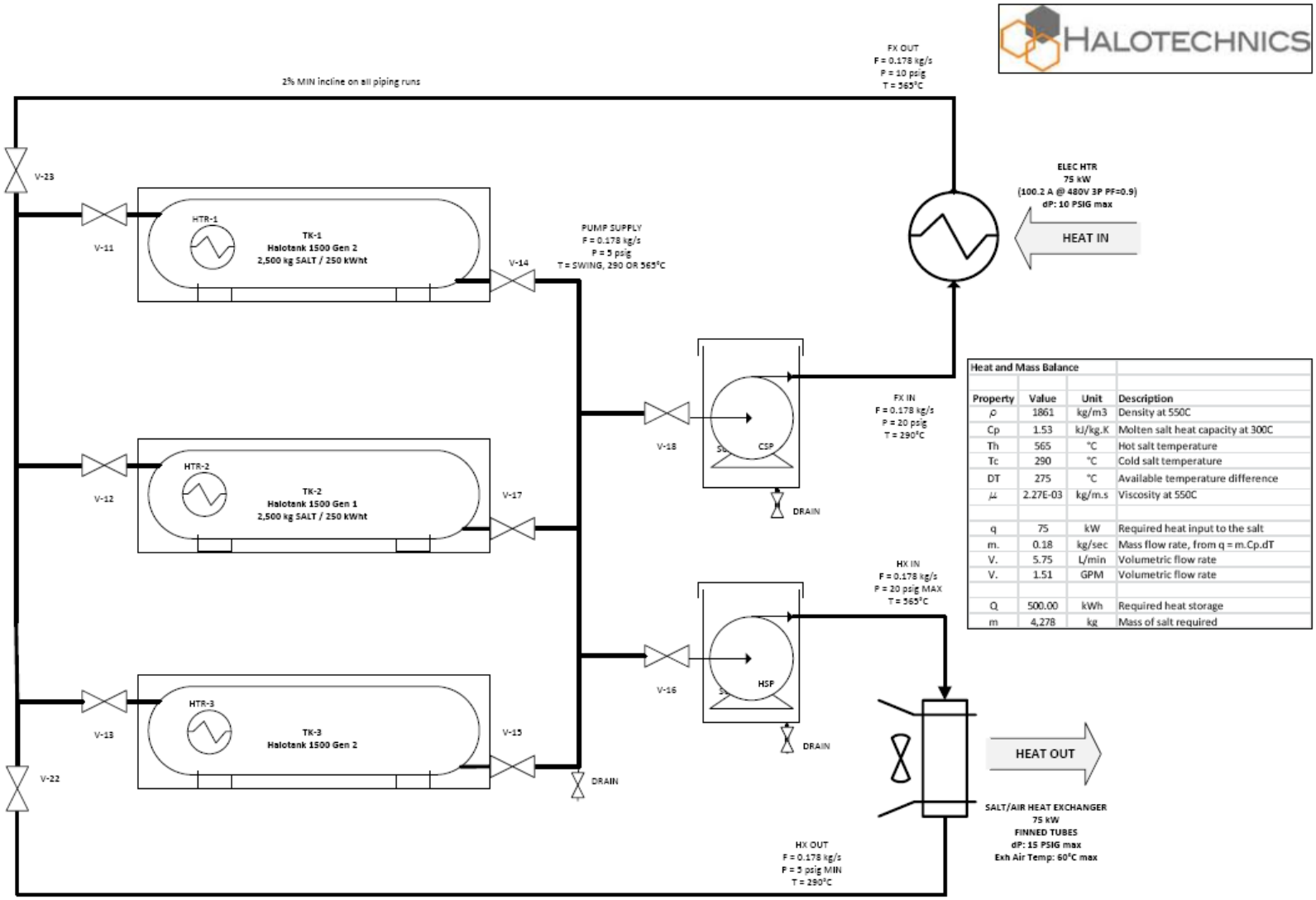

Heat and Mass Balance			
Property	Value	Unit	Description
ρ	1861	kg/m3	Density at 550C
Cp	1.53	kJ/kg.K	Molten salt heat capacity at 300C
Th	565	°C	Hot salt temperature
Tc	290	°C	Cold salt temperature
DT	275	°C	Available temperature difference
μ	2.27E-03	kg/m.s	Viscosity at 550C
q	75	kW	Required heat input to the salt
m.	0.18	kg/sec	Mass flow rate, from q = m.Cp.dT
V.	5.75	L/min	Volumetric flow rate
V.	1.51	GPM	Volumetric flow rate
Q	500.00	kWh	Required heat storage
m	4,278	kg	Mass of salt required

The fluid is a mixture of nitrate salts, consisting of 60% by weight of sodium nitrate and 40% by weight of potassium nitrate. Its thermo-physical properties are listed in **Error! eference source not found.** below.

Table 2: Thermo-Physical Properties of 60-40 Nitrate Salt

Parameter	*Cold*	*Hot*	*Units*	*Notes*
T	290	565	°C	Operating temperature
r	1950	1750	kg/m3	Density
Cp	1.53	1.53	kJ/kg.K	Heat capacity
m	2.27	1	cP	Viscosity

In order to adequately monitor and control the system, measure its performance, and most importantly guarantee personnel safety, various instrumentation and control loops were prepared.

In an effort to maximize the modularity of this system, the tanks have a local control system where all tank instrumentation is terminated, which is then conveyed to a main control system located in the control room. Each tank is instrumented to measure the level and temperature of the salt inventory. Additionally, each tank is equipped with a drain and a salt return valve, which is actuated by the local tank controller following a command from the master control system. To overcome heat losses for freeze protection and startup considerations, each tank is also equipped with a 6 kW immersion heater capable of regulating the temperature of the salt inventory.

Molten salt pumps administer the molten salt in the process piping. The researchers determined that one cold pump and one hot pump, both located externally on the molten salt storage tanks, was the best way to demonstrate this technology at small scale. Eventually, this design would directly translate to a full scale system design. The pumps are located in external sumps near the tank drain manifold. The sump inlet valve allows molten salt to fill the sump, and serve as an isolation valve during system shutdown or for maintenance purposes. Each pump is also equipped with a distributed control system, which functions identically for the hot and cold pump. The distributed control system (DCS) controls the pump shaft rotational speed (RPM) and obtains feedback from an in-line salt flowmeter. The level of salt in the sump is also monitored through the use of level switches.

To heat and cool the salt at a rate of 75 kW, two heat exchangers have to be included in the system design. To replicate the solar thermal input for the salt, a resistive heater was selected because they are commercially available for this specific power and temperature rate. The heater is controlled using a temperature control loop with the control thermocouple located in the stream of salt exiting the heat exchanger, which is set to the desired salt output temperature of 1049˚F (565˚C). The control is equipped with an over-temperature protection circuit to protect the heating elements from overheating.

In a deployed system, the salt would be cooled in a salt-steam heat exchanger to generate steam at pressure and temperature conditions matching the inlet to a steam turbine generator. This is outside the scope of this demonstration project, since such a heat exchanger has been demonstrated in the past both in research and development (R&D) and commercial settings at various solar thermal power plants. The need still exists to cool the salt at a rate of 75 kW, which is achieved through a finned-tube heat exchanger with the molten salt flowing through the tube and ambient temperature air forced over the fins outside of the tube with a blower. The blower speed is controlled by a variable frequency drive, and is in a temperature feedback control loop with the control thermocouple located in the salt stream exiting the heat exchanger, which will be set to the desired salt output temperature of 554˚F (290˚C).

In order to prevent molten salt from back-flowing into the salt cooler during the heating cycle, or into the salt heater during the cooling cycle, isolation valves are located after each heat exchanger and set to the closed position when the heat exchanger is not in use.

The piping for the system was sized in such a way that the molten salt velocity remains under 10 feet per second (ft/sec), as is customary in such applications. This low target flow velocity is commonly used in commercial systems to guarantee a 20 year life of the plumbing, as it guarantees very slow wear of the plumbing due to friction or abrasion. From mass flow equations, the pipe size was selected as normal pipe size (NPS) 3/4 schedule 40, which is the closest standard sized pipe which achieves the target flow velocity.

The draining of the system has been closely considered. The piping is inclined at a 2 degree slope throughout the entire system, in order to ensure that the plumbing drains entirely following the shutdown of the pumps. This precaution is necessary to avoid molten salt freezing in the plumbing and being unable to resume operations. The elevated plumbing is designed to slope towards the middle tank, whereas the ground-level plumbing drains into the cold pump sump. Additionally, each piece of equipment is equipped with a drain and drain valve for maintenance and decommissioning purposes.

The process piping is entirely heat traced with resistive heaters designed for this purpose (also commercially available). These heaters are sized such that they can bring the plumbing temperature to the operating temperature and thereby avoid thermal shock when starting the flow of salt. The heat trace is divided into multiple zones, all individually controlled, in order to have the ability to turn off the heaters in those sections of plumbing that are not in use.

The Piping and Instrumentation Diagram (P&ID) of the three-tank TES is presented in Appendix A.

The Facility Floor Plan of the three-tank TES is presented in Figure 5.

The Input and Output list (IO List) of all the monitoring and controls instrumentation is presented in Appendix B.

Figure 5: Facility Floor Plan

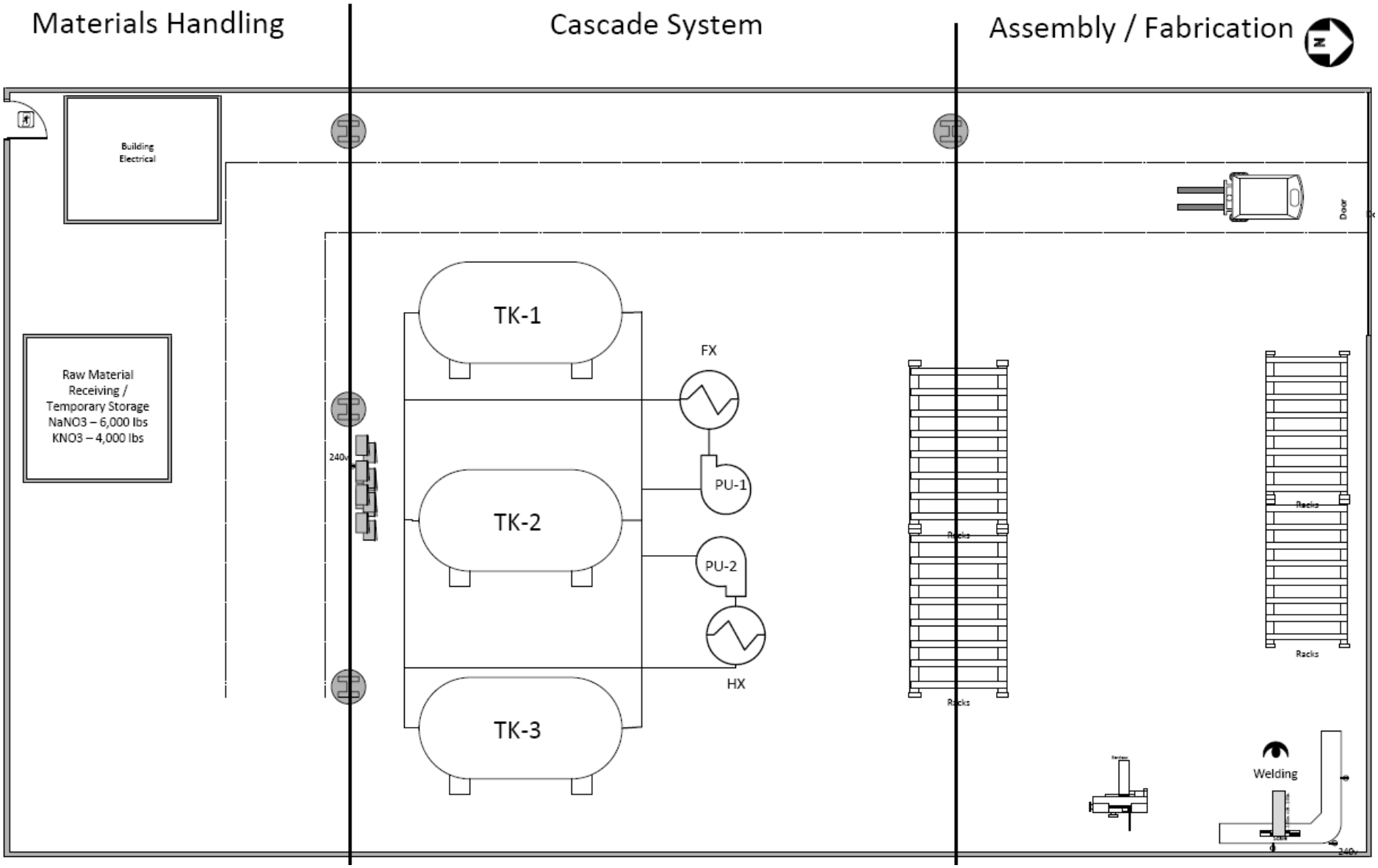

CHAPTER 2: Mechanical Design

The mechanical design package includes the detailed component design of the thermal storage tanks, the molten salt transfer pumps, and the two heat exchangers. Every piece of major equipment has been either fully designed in house (tanks, pump sumps) or fully specified and quoted by a California vendor (pumps, heat exchangers, valves). The detailed assembly procedure for the tanks was partially developed, and constitutes one element of the Assembly Plan.

The overall system computer-aided design (CAD) is presented in Appendix C and shows the entire three-tank system.

The complete Bill of Materials and the procurement schedule is included in Appendix D.

Molten Salt Tank

The molten salt is housed in a 2,000 gallon, heavily insulated, internally heated, skid-mounted, horizontal stainless steel tank. The tank design will accommodate the static load of 15 tons of molten salt at 1049˚F (565˚C) and have thermal losses of less than 3% per day of total thermal energy inventory.

The tank is skid-mounted and conforms to international organization standardization (ISO) size shipping containers to facilitate deployment and standardize manufacturing. The tank will be equipped with a heating system capable of maintaining the molten salt contents at its highest temperature of 1049˚F (565˚C) while minimizing heat loss to the environment, supply and drain ports to support the drain and fill operations, as well as various instrumentation ports to provide temperature, pressure and level information to the control system.

Swing Tank Design

The Halotank consists of five subsystems described here. More detail is provided on the tank shell and the insulation package, which represent the core of the tank design.

1. The shell, which is made of ¼ inch thick AISI 304 stainless steel, is in direct contact with the molten salt. It is a horizontal tank resting on two saddles, has dished heads, and multiple penetrations through the top and sides for molten salt flow and instrumentation purposes. The tank is pressure relieved to keep the pressure in the head space below 0.5 pounds per square inch gage (psig) at all times. The shell requisition drawing is shown in Appendix E.

2. The insulation, which is made of microporous powdered insulation material supplied by Microtherm®, is designed to minimize heat loss to the environment and meet the thermal performance objectives of this program. The tank saddles

rest on a 6 inch layer of insulation board, which ensures that minimal heat is lost through the bottom of the tank. The powdered insulation is contained within a shipping container shell which is welded to the seismic support frame shown in Appendix F.

3. The heating system, which is sized at 6 kW to maintain the salt inventory at its operating temperature of 1049˚F (565˚C) and regulate the tank temperature. The heater is an immersion heater located inside of a thermal well at the bottom of the tank. This heater is available commercially through vendors such as Watlow. The heating system is controlled using temperature feedback from two 1/4 inch k-type inconel sheathed thermocouples (one for monitoring process temperature and the other for over-temperature protection). The heater controls will be located in a panel in close physical proximity to the tank itself.

4. The frame, which supports the tank and insulation load, and allows for easy transportation and deployment of the Halotank. The bottom skid is sized to conform with the standard ISO shipping container size of 8 feet by 10 feet. In addition to providing support and transportation benefits, the skid will be equipped with expansion bearing plates made of a polytetrafluoroethylene (PTFE) material designed to allow the tank to grow and shrink during thermal expansion. Since the entire tank, including the support saddles, is insulated, the total length of the tank is expected to grow approximately 1 inch from ambient temperature to 1049˚F (565˚C). In order to relieve the stresses caused by this thermal expansion, these bearings will be installed below the insulation pads under the saddles. The design for this frame has been reviewed by a California structural professional engineer (PE) for seismic safety at its intended installation site in Emeryville, California. Details for this support skid are shown in Appendix F.

5. The instrumentation, which consists of thermocouples and level sensors to measure the thermal performance of the tank and ensure the heat loss targets are achieved.

6. Temperature will be measured using a multipoint k-type inconel sheathed thermocouple located in a thermal well in the molten salt cavity at 10 different depths. Temperature will also be measured in the heater well for over-temperature protection.

The first version of the Halotank was built during a previous development program funded by Advanced Research Projects Agency-Energy (ARPA-E). Its thermal performance was demonstrated and the design has been approved by a California licensed structural engineer. A photograph of the first Halotank is shown in Figure 6.

Figure 6: First Version of the Halotank at the Halotechnics Facility

Design Requirements

The process conditions for the design point for the Halotanks are listed below:

1. Sizing
    a. Internal volume: 1,690 gallons at 68˚F (20˚C)
    b. Envelope constraint: 8 feet by 9 feet through 6 inches by 10 feet (ISO high cube shipping container)
2. Heating and heat loss
    a. Tank shall be equipped with an internal heating system capable of bringing the internal temperature of the tank from ambient to 1049˚F (565˚C). Heater is sized at 6kW. Vendor will supply control panels and transformers to operate the heating system and to connect to facility power (240 volts (V) 1-Pole (P) or 3P preferred, 480V 3P available).
    b. Heat loss when the molten salt is stored at 1049˚F (565˚C) shall be no greater than 1.9 kW
3. Operating conditions

a. Operating Pressure: atmospheric

b. Operating Temperature: 554˚F (290˚C) to 1049˚F (565˚C)

c. Maximum Temperature: 1085˚F (585˚C)

d. Operating Level: entirely drain and fill daily.

i. Max fill rate: 1.188 kilograms per second (kg/sec) (3 hour fill)

ii. Max drain rate: 1.188 kg/sec (3 hour drain)

4. Structural packaging

a. Tank must be capable of containing 15,000 kg of molten salt at 1049˚F (565˚C)

b. Tank must be mounted on a 8 feet by 10 feet skid capable of withstanding the load of

i. Standard freight shipping conditions when the tank is empty

ii. Standard California seismic load when the tank is full

c. Tank insulation and structure must be capable of accommodating thermal expansion caused by the temperature cycling of the molten salt inventory

5. Molten Salt

a. Composition: 60% sodium nitrate + 40% potassium (percentage by weight)

b. Specific gravity: 2.0

6. Connecting line sizes

Top nozzles extend 22.5 inches above top of shell

a. Inlet: NPS 2-1/2 Schedules (SCH) 40, 300# flange + blind + bolts, located at the top of the tank

b. Drain port: NPS 2-1/2 SCH 40, 300# flange + blind + bolts, located at the bottom of the tank, horizontal

c. Temperature monitoring port: two NPS 1/4 SCH 40, threaded half couplings, located at the top of the tank

d. Pressure relief and monitoring port: NPS 4 SCH 40, 300# flange + blind + bolts, located at the top of the tank

e. Level monitoring port: NPS 3 SCH 40, 300# flange + blind + bolts, located at the top of the tank, pointing downward.

f. Heater thermal well: NPS 6 SCH 40, 9’ length seamless, welded plate flange inside the tank, 150# flange outside the tank, located at the bottom of the tank, pointing horizontally.

7. Certification
    a. The American Society of Mechanical Engineers (ASME) SECT. VIII, DIV. 1, '13ED

Preliminary Insulation Design and Thermal Assessment

The target insulation performance for this tank is to keep the heat loss below 3% of the tank's thermal capacity over 24 hours. For this size of the approximately 1500 kWh tank, that 3% is 45 kWh which equals an 46.85˚F (8.25˚C) drop in temperature of the molten salt inventory. This was concluded after assuming a constant heat loss over 24 hours that corresponds to a 1.9 kW loss.

Microtherm Free Flow microporous insulation was selected for its extremely low thermal conductivity over the required temperature range; it is less than half of that of ceramic wool at temperatures between 392˚F (200˚C) and 1112˚F (600˚C). Microtherm FreeFlow technical datasheet is shown in Table 3 and a graph of the Microtherm thermal conductivity is shown in Figure 7. A comparison of commercially available insulation by thermal conductivity is shown in Figure 8. Data for this chart was established from the manufacturer's data sheets.

Table 3: Microtherm FreeFlow technical data

Technical data

Brand		FREEFLOW®	
Classification Temperature		°C	1000
Nominal bulk density		kg/m³	220
Nominal tap density		kg/m³	260
Thermal Conductivity (ISO 8302, ASTM C177)			
	200°C mean	W/m.K	0,026
	400°C mean	W/m.K	0,036
	600°C mean	W/m.K	0,049
	800°C mean	W/m.K	0,064
Specific Heat Capacity			
	200°C	kJ/kg.K	0,93
	400°C	kJ/kg.K	1,02
	600°C	kJ/kg.K	1,06
	800°C	kJ/kg.K	1,10
Shrinkage			
	Full soak 24h @ 800°C	%	< 0,5
	Full soak 24h @ 1000°C		< 3

(from: www.promat-hpi.com)

Figure 7: Microtherm FreeFlow Thermal Conductivity

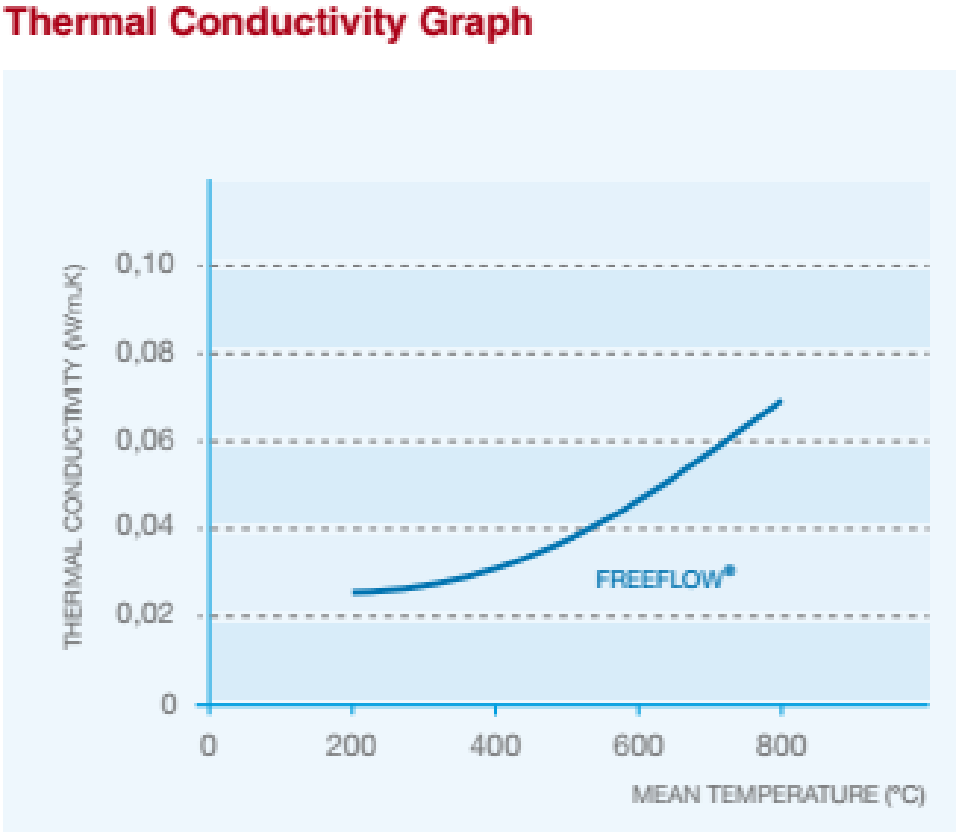

(from: www.promat-hpi.com)

Figure 8: Comparative Thermal Conductivities of Various Insulation Materials

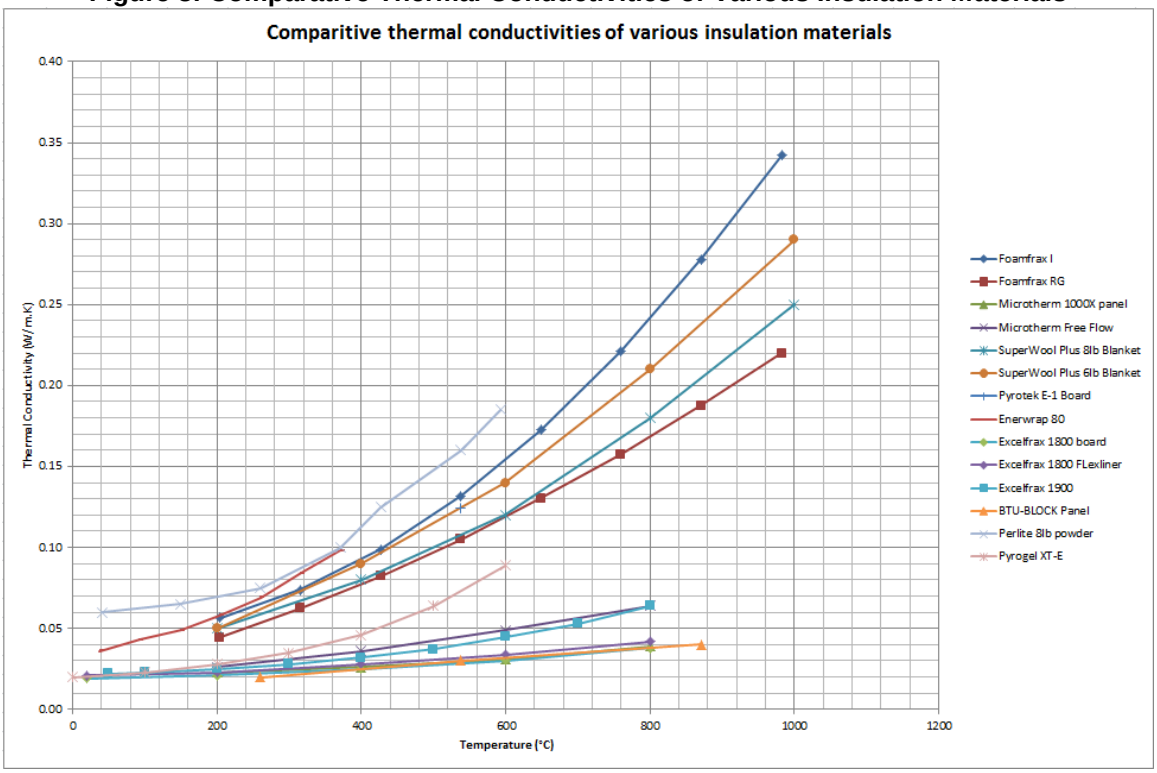

The CAD for the Halotank with shell is shown in Figure 9 and a section view in Figure 10.

Figure 9: Powder-Fill Halotank

Figure 10: Section view of Powder-Filled Halotank

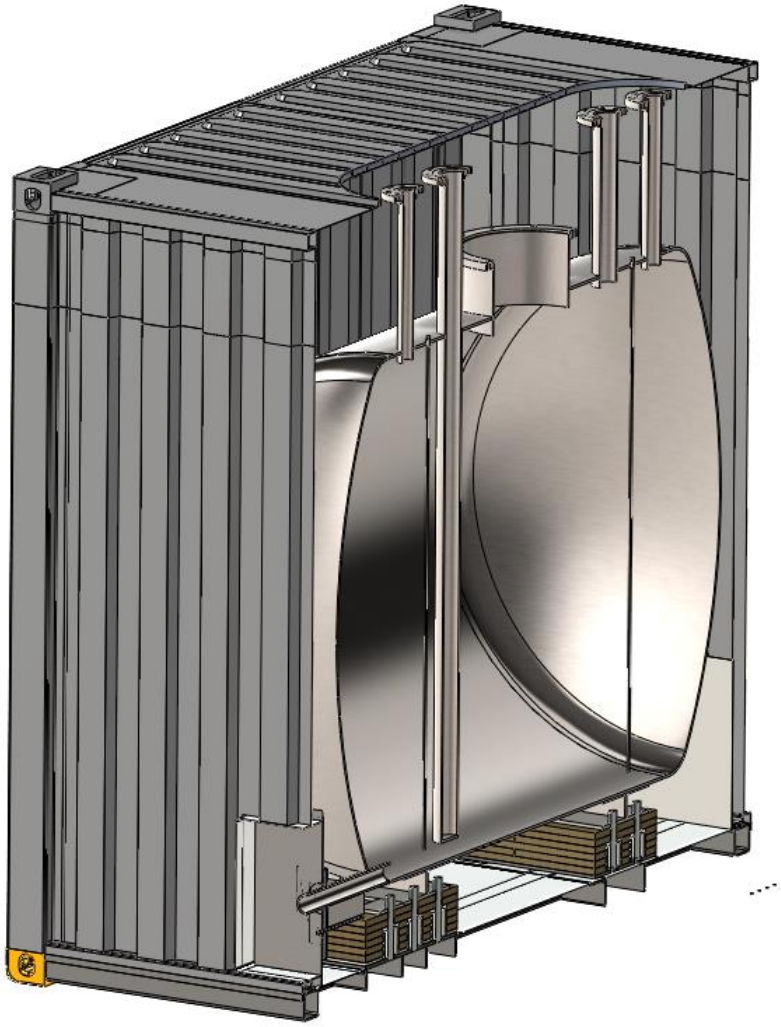

Molten Salt Pumps

Scope

The system requires two molten salt pumps (one cold pump and one hot pump). The pumps will be mounted to pump sumps that are external to molten salt tanks. The cold pump transfers molten salt to an electric heater, and the hot pump transfers molten salt to a heat exchanger which simulates a steam generator.

Also included in the scope:

- Motor and motor controls (VFD)
- Flange and mounting hardware to secure the pump to the sump
- Blind flange on the discharge pipes

- Thermal wells for immersion heater (1x NPS 4) and thermocouples (1x NPS 1/2)

Normal Operating Conditions

The cold and hot pumps will operate at the following conditions:

Nominal Flow rate:	1.5 gallons per minute (GPM) at 20 psig
Maximum flow rate	1.8 GPM at 20 psig (nominal +20%)
Minimum flow rate	1.2 GPM at 20 psig -nominal - 20%
Head	20 ft at 1.5 GPM

The discharge piping is 3/4 NPS SCH 40

Abnormal conditions are not discussed at this time.

Pump dimensions / sump integration

The molten salt pumps will be installed and integrated with two external sumps.

Suction depth will be 59 inches below the sump flange break.

There are no height constraints above the flange.

The sumps are each equipped with one immersion type resistive heater to maintain the operating temperature within 3˚F (-16˚C). The immersion heater is out of scope, but the NPS 4 thermal well in which the heater is located shall be incorporated into the pump flange design, such that the thermal well does not interfere with the housing or rotating parts below the flange line.

Additionally, Halotechnics requires a direct salt temperature measurement at five different immersion depths in each sump. This measurement will be obtained with a five-point thermocouple. A NPS 1/2 thermal well in which the probe is located shall be incorporated into the pump flange design, such that the thermal well does not interfere with the housing or rotating parts below the flange line.

Pump / Sump sealing

Care shall be taken to prevent molten salt from creeping past the pump shaft or other flange penetrations.

The flange seal between the pump and the sump can be obtained using a flange gasket according to ASME B16.21 (not in scope). The gasket manufacturer and model is tentatively identified as Flexitallic style “CGI” spiral wound gasket with an Inconel and Thermiculite winding material and type 316L inner and outer locating and reinforcement rings.

Details of pump / sump sealing are left to the supplier.

Materials of Construction (minimum material requirements)

Both pumps shall be designed with a 1/16 of an inch corrosion allowance to last 20 years in the molten salt environment described previously.

Typical compatible materials include boiler plate steel (A516 grade 70) for use at 550˚F (287˚C), and 347 alloy steel for use at 1050˚F (565˚C). The supplier is left to specify the materials of construction of all components in contact with the molten salt.

Shutdown Frequency / Thermal Cycling

Table 4: Thermal Recycling

Parameter	*Cold*	*Hot*	*Units*	*Notes*
Hours on	10.00	4.00	hours/day	Hours of continuous operation, per day
Hours off	14.00	20.00	hours/day	Hours shut down, per day
Days operational	200	200	days/year	
Design life	10	10	years	
S/D days	50	50	days	Max # days of continuous non-operation

The cold pump normal operation will consist of continuous operation for 10 hours followed by a 14 hour shutdown period. The pump and sump will be maintained at a constant temperature of 550˚F (287˚C) during the entire 24 hour cycle. The pump is expected to run 200 days out of the year, with up to 50 days of continuous non operation.

The hot pump normal operation will consist of continuous operation for 4 hours followed by a 20 hour shutdown period. The pump and sump will be maintained at a constant temperature of 1050˚F (565˚C) during the entire 24 hour cycle. The pump is expected to run 200 days out of the year, with up to 50 days of continuous non-operation.

Efficiency

The pump overall efficiency (defined below) at the operating point shall be no less than 60%.

The pump overall efficiency is calculated at the operating point (defined in “Normal Operating Conditions”) as the ratio of the fluid power at the pump head discharge to the electrical power into the VFD.

Bearing / Lube system

Bearings may be located outside of the tank away from the heat (vertical cantilever pump) or submerged in the salt bath. The supplier will specify the pump configuration and lubricating fluid.

Pump CAD

A CAD model of the pump was provided by Wenesco (Chicago, IL) and is included in Figure 11. The detail of the pump lid showing all the penetrations for instrumentation and temperature controls is shown in Figure 12.

Figure 11: Hot and Cold Pump CAD Model

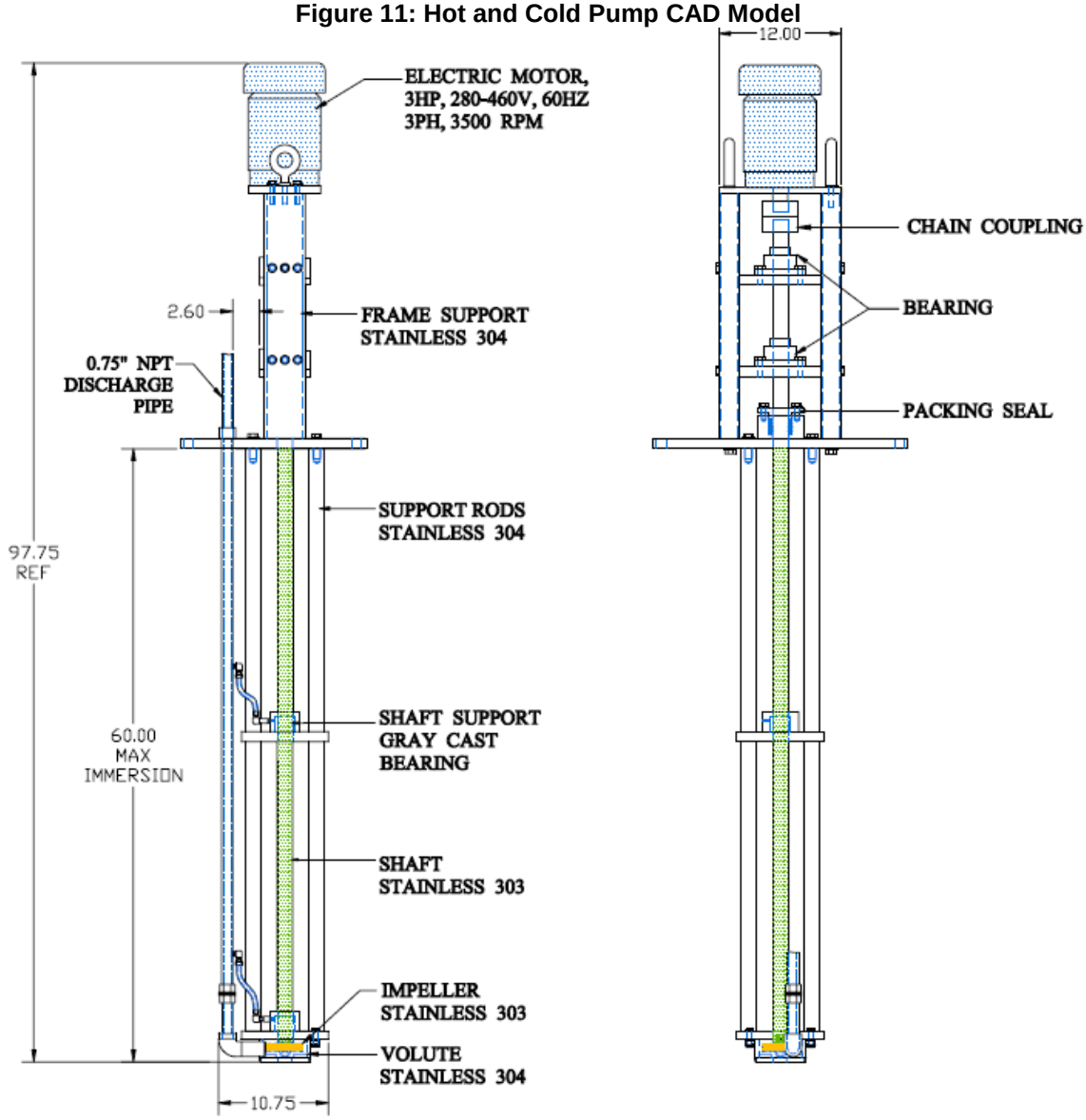

Figure 12: Hot and Cold Sump CAD Model Detail

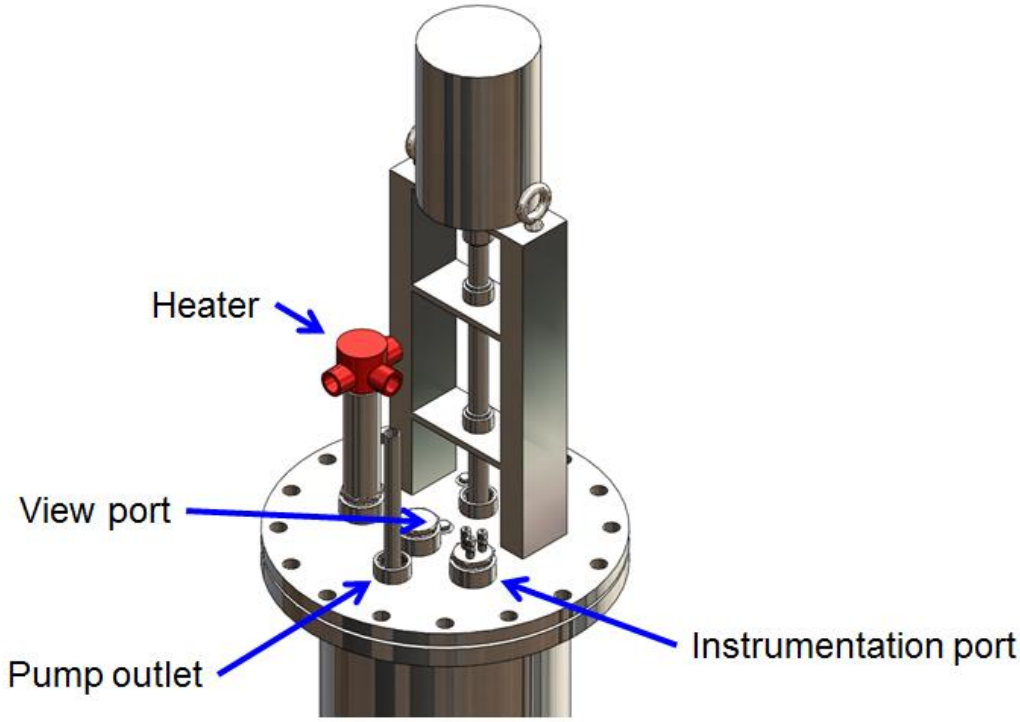

Pump Sumps

The pump sumps were also designed for molten nitrate salt service at 1049˚F (565˚C) with a maximum temperature of 1085˚F (585˚C). The sumps were designed to accommodate the pumps, heaters and instrumentation with as small of a diameter as practical. Their height was determined by considering a worst case scenario of all the available salt in the system equalizing in height in the sump plus the salt from the heat exchangers back flowing into the sumps.

The sumps are constructed of 304 stainless 16 inch NPS SCH 40 pipe. The interior is 60 inches deep to accommodate maximum salt charge described above. The flange is 16NPS 150# class. Sump inlet pipe is located 8 inches from the bottom of the tank and is 3/4 NPS. Insulation is 6 inches of SuperWool blanket around the sump with 6 inches of Microporous board supporting the tanks below.

The sumps are internally heated by a 3kW heater in a NPS 4 thermowell.

The sumps are each equipped with a drain valve, which will allow the sumps to drain entirely for maintenance purposes.

The hot and cold sump CAD models are shown in Figure 13 with the pumps in place and the insulation shown as transparent.

The sumps will be secured to an external frame, itself anchored to a reinforced 18 inch concrete slab, or as instructed by a California PE certified Structural Engineer (not in scope).

The fasteners used to secure the pump to the flange shall be selected to accommodate thermal expansion from ambient temperature to full operating temperature. The design of this attachment will be submitted for review to a Structural Engineer certified by the state of California.

Figure 13: Hot and Cold Pump Assembly CAD Model

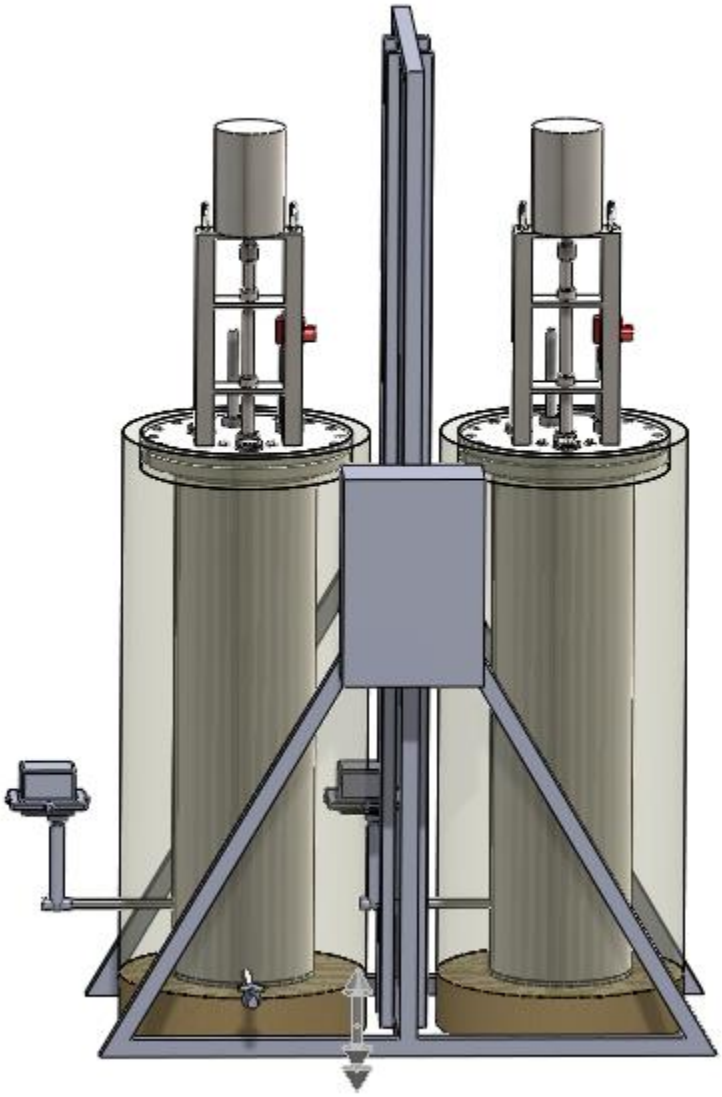

Heat Exchanger

A counter flow heat exchanger based on an exhaust gas economizer. The CAD model is shown in Figure 14.

This heat exchanger (HX) will use cool air to remove heat from a 1.5GPM flow of molten nitrate salt. The air will be supplied from blowers and the flow rate will be adjustable. The salt will enter the plumbing at 1049˚F (565˚C), 1085˚F (585˚C) maximum, and be cooled to 554˚F (290˚C).

Air will be supplied to the inlet of the exchanger at less than 86˚F (30 ˚C) and be heated to approximately 212˚F (100 ˚C). The HX will be dissipating energy at a max rate of 100kW and 75kW nominal. This corresponds to a max air flow of approximately 2500 cubic feet per minute (cfm).

The media is molten salt, 60% sodium nitrate and 40% potassium nitrate by weight, with all wetted components constructed of 304 stainless steel. Piping is 3/4 NPS SCH 40 throughout and all joints are welded.

The HX will be externally heated by radiant heaters to prevent freezing when required and the exterior will be insulated.

Figure 14: Counter Flow Air HX

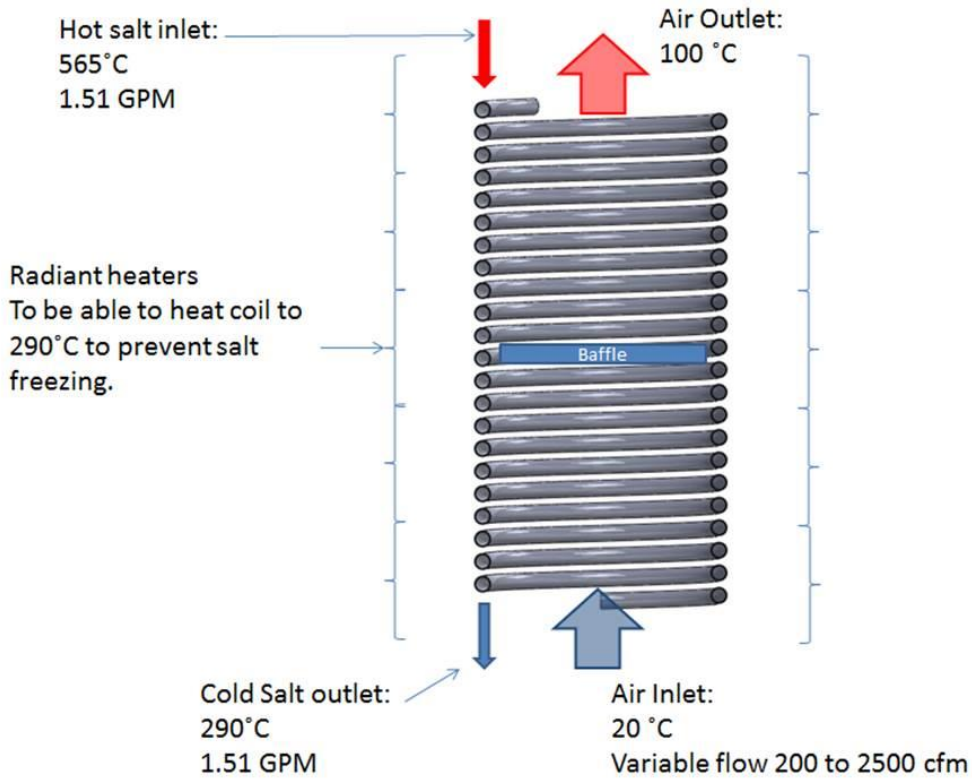

Molten Salt Heater

The molten salt heater or *FX* is an electric circulation heater mounted with vertical flow orientation. It is designed to provide 75kW of heat to the salt and is sized at nominal +10% at 82kW to hit that target. The supply power for the heater is to be 480V, three phase. The heater has a control board with Watlow controllers that can communicate with the control system.

As with all the wetted components in the system, the FX is designed for 60% Sodium nitrate and 40% Potassium nitrate molten salt at temperatures up to a maximum of 1085˚F (585 ˚C). It is constructed from 3014L stainless steel and the lid seal is welded rather than sealed with a gasket to avoid leakage. It is designed to have less than a 2psi pressure drop at the required flow of 1.5GPM of molten salt.

The maximum diameter is the ANSI 12 150# flange and the overall length and height is 60 inches. Process piping is 3/4 NPS weld and the inlet is at the bottom to allow full drainage of the FX and the outlet is perpendicular to the axis of the tank at the top of the heated length. The exterior of the FX shell is wrapped with 6 inches of mineral wool insulation. CAD model of the FX is shown in Figure 15.

Figure 15: FX CAD

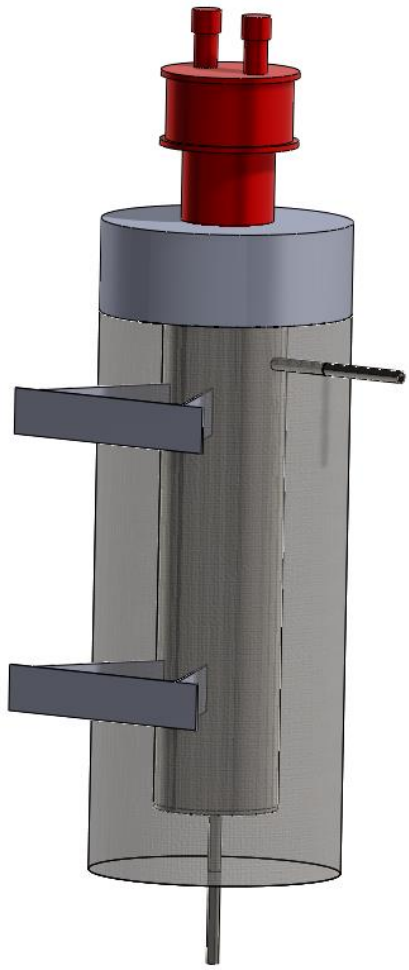

CHAPTER 3: Instrumentation and Control Design

The Instrumentation and Control (I&C) design package includes the design of the piping itself, as well as the specifications of the valves and instrumentation required to safely monitor and control the thermal storage system. The requirements of the control system have been identified and compiled in a Software Requirements Specification (SRS). This includes the normal operation of the control system (the detailed sequence of how the control operates the storage system), and abnormal operation (including responding to sensor faults and power outages). This document is intended to serve as a development plan for controls engineers and as a documentation package for the project owner.

Instrumentation Design

Piping

In order to limit corrosion rates in the process piping, the pipe size was chosen to establish a target flow rate of 3 meters per second (m/s). Given the fluid properties of solar salt, this corresponds to a target pipe ID of 0.8 inches. The closest standard pipe dimension is NPS 3/4 sch 40, which has a 1.05 inch OD and a 0.11 inch wall thickness, resulting in a 0.83 inch ID. The material selected is 304 stainless steel. This piping material is readily available and easy to procure from a variety of local vendors.

In order to prevent the formation of freeze plugs from molten salt accumulating in the lines and freezing following a pump shutdown, the plumbing is designed with a 2% inclination at all practical locations.

Valves

There are two categories of valve specified in the system; Manual Drain Valves and Automatic Gate Valves in two configurations, fail open and fail closed. Gate valves were selected based on the learnings of many pioneering molten salt facilities including Solar One and Solar Two. Ball Valves were avoided for this reason due to many reports of leakage past the valve and overboard.

The gate valves selected utilized a 304L stainless steel body with zirconia ceramic wetted interiors. They are compatible with the 60 to 40% Sodium nitrate and Potassium nitrate molten salt and are rated for use up to 1085˚F (585 ˚C). They have 3/4 inch NPD weld fittings and are rated to 20psi at max operating temperature. The maximum inline leakage at 20psi is 20ml/hr. The valves selected utilize electric actuators and are switchable between fail-open and fail-closed operation. The typical schematic is shown in Figure 16.

The valves feature limit switches to indicate full-open and full-closed positions.

The manual drain valves are similar but without the actuators and limit switches. They have hand wheels for actuation and are all stainless steel without the ceramic lining.

Figure 16: Schematic of Molten Salt Gate Valve (With Manual Actuator)

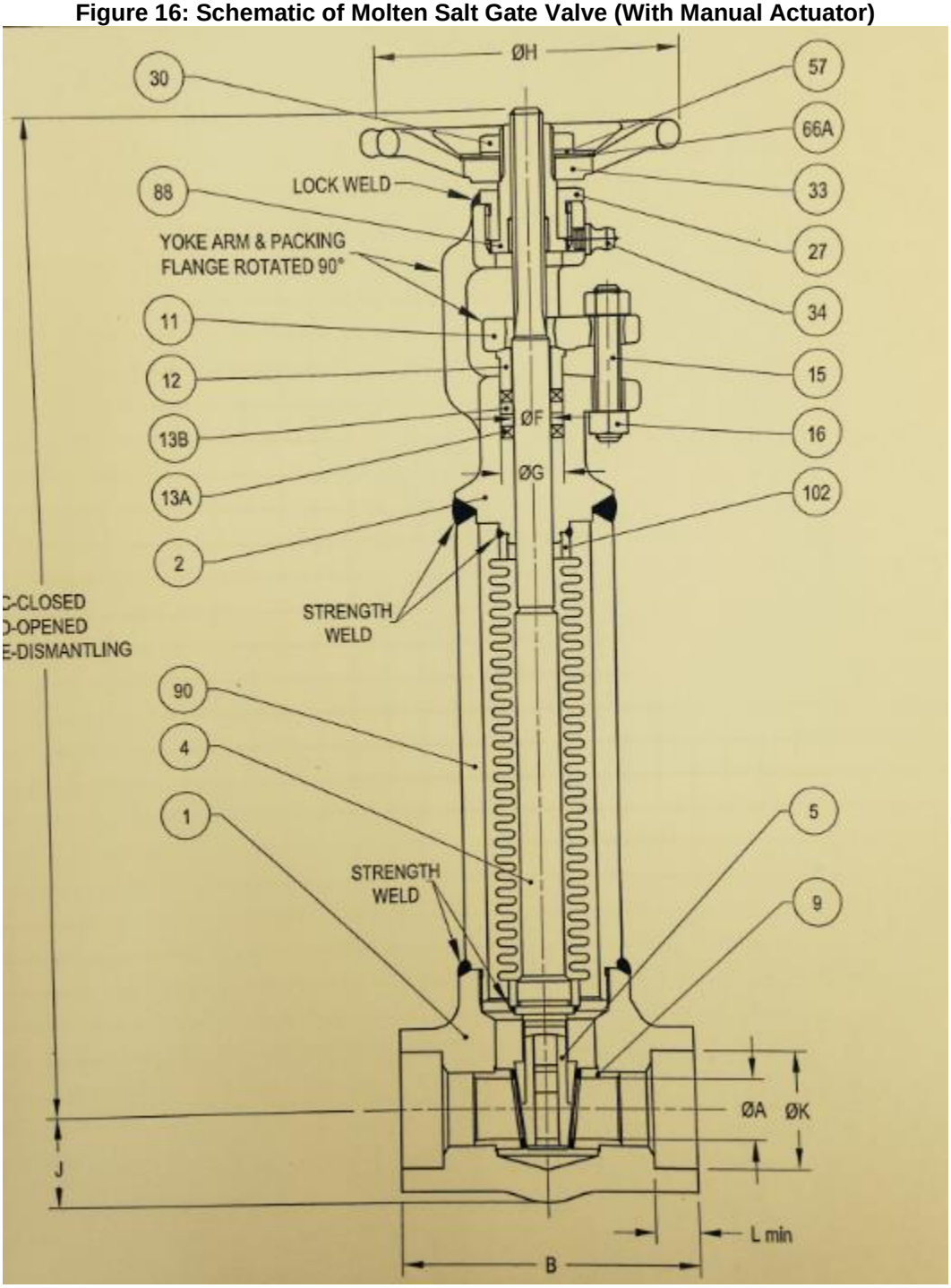

Salt Flow Meter

The high temperature requirement of 1085˚F (585˚C) left few candidates for a flow measurement instrument. Coriolis had been considered, but 752˚F (400˚C) is the maximum that a Coriolis flow meter can be used. The Flexim ultrasonic flowmeter is rated to 1112˚F (600˚C) and is non-contact, clamping instead to the exterior of the 3/4 inch NPS process piping in similar fashion to the units shown in Figure 17 and Figure 18.

This meter will cover the desired range of 0.6 to 6 liters per minute (L/min) and can scale cost-effectively with increasing pipe diameter and flow rate. The meter is calibrating using the speed of sound in the fluid medium, which is a function of the fluid temperature. An accurate temperature measurement is therefore necessary to ensure an accurate flow rate measurement.

Figure 17: Flexim Ultrasonic Flowmeter Dimension Sketch

pipe mounting fixtures und chains WI-400x-xL-C

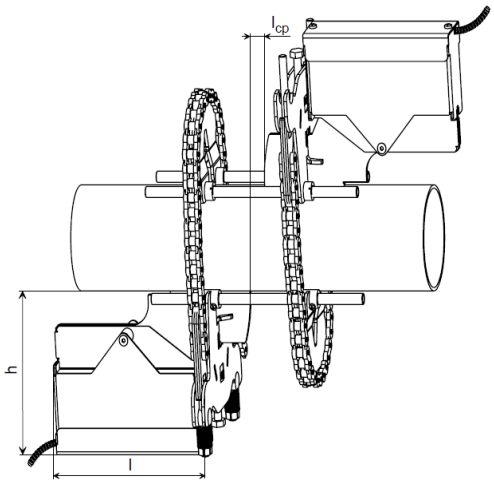

dimensions:

- length: $2 \cdot l + l_{cp}$
  WI-400K: l = 9.57 in
  WI-400M, WI-400Q, WI-4001, WI-4004: l = 10.98 in
  l_{cp} = depending on application
- width:
  outer pipe diameter + 1.26 in
  (min. 7.9 in)
- height:
  outer pipe diameter + 2 · h
  WI-400K: h = 7.01 in
  WI-400M, WI-4001, WI-400Q, WI-4004: h = 7.9 in

material: stainless steel 304

Figure 18: Flexim WI-400 Temperature Profile

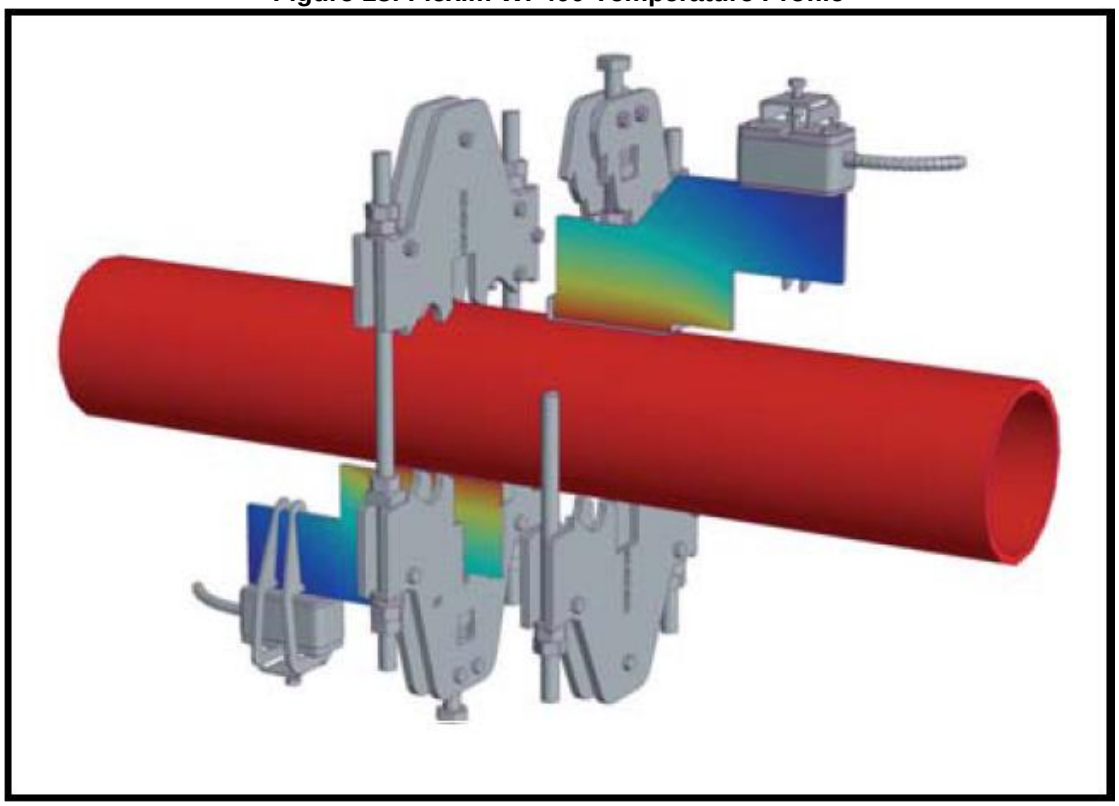

Control System Design

A detailed specification of the control system is included in Appendix H.

GLOSSARY

Term	Definition
CSP	Concentrating Solar Power
EPIC	Electric Program Investment Charge
FX	Heater providing heat to molten salt
HX	Heat exchanger used to remove heat from molten salt
IO List	Input / Output list of all the monitoring and controls instrumentation
MCTES	Modular Cascaded Thermal Energy Storage System
P&ID	Piping and Instrumentation Diagram
PFD	Process Flow Diagram
TES	Thermal Energy Storage

REFERENCES

CPUC Rulemaking 11-05-005, Sacramento, California, 2011.

CPUC Rulemaking 10-12-007, Sacramento, California, 2013.

Denholm, P. et al, "An Analysis of Concentrating Solar Power with Thermal Energy Storage in a California 33% Renewable Scenario," Technical Report TP-6A20-58186, NREL, Golden, Colorado, 2013.

Klein, J. et al, "Comparative Costs of California Central Station Electricity Generation," California Energy Commission, p. C-21, 2010.

"References for Energy End-Use, Electricity Demand and GHG Emissions References and Calculations (Attachment 12)," California Energy Commission (EPIC PON 13-302), p. 1, 2014.

APPENDIX A:
PIPING AND INSTRUMENTATION DIAGRAM

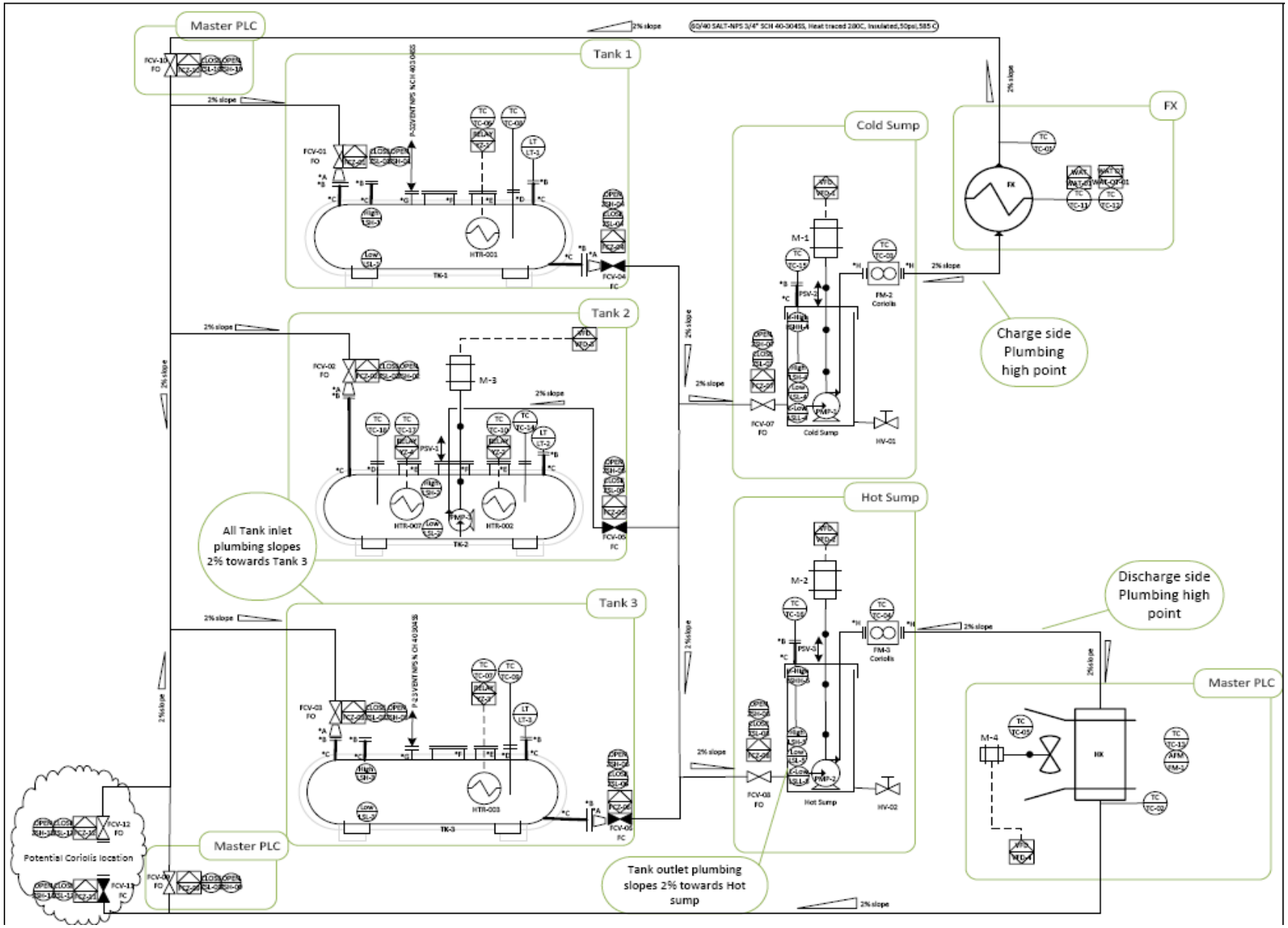

APPENDIX B:
IO LIST

Type	Tag ID	Class	Location	Type	Service	Manufacturer	V Sup	I Sup	Model	PN	Range	Signal	Panel
AI	FM-1	Air Flow meter	HX	AFM	Air	Dwyer	24VDC	18mA	MS2	MS2-W102	4-20	mA	Main
AI	LT-1	Level Transmitter	Tank 1	LT	Air	VEGA	24VDC	0.17A	VEGAPULS 62	PS62.UXCND28DNXX	4-20	mA	Tank 1
AI	LT-2	Level Transmitter	Tank 2	LT	Air	VEGA	24VDC	0.17A	VEGAPULS 62	PS62.UXCND28DNXX	4-20	mA	Tank 2
AI	LT-3	Level Transmitter	Tank 3	LT	Air	VEGA	24VDC	0.17A	VEGAPULS 62	PS62.UXCND28DNXX	4-20	mA	Tank 3
DI	LSH-1	Level switch	Tank 1 High	High	Molten salt	Halotechnics	5 VDC	1mA	Haloswitch HT	HSLVL-24-0	0-5	V	Tank 1
DI	LSH-2	Level switch	Tank 2 High	High	Molten salt	Halotechnics	5 VDC	1mA	Haloswitch HT	HSLVL-24-0	0-5	V	Tank 2
DI	LSH-3	Level switch	Tank 3 High	High	Molten salt	Halotechnics	5 VDC	1mA	Haloswitch HT	HSLVL-24-0	0-5	V	Tank 3
DI	LSH-4	Level switch	Cold Sump	High	Molten salt	Halotechnics	5 VDC	1mA	Haloswitch HT	HSLVL-24-0	0-5	V	Cold Pump
DI	LSH-5	Level switch	Hot Sump	High	Molten salt	Halotechnics	5 VDC	1mA	Haloswitch HT	HSLVL-24-0	0-5	V	Hot Pump
DI	LSHH-4	Level switch	Cold Sump high-high	H-High	Molten salt	Halotechnics	5 VDC	1mA	Haloswitch HT	HSLVL-24-0	0-5	V	Cold Pump
DI	LSHH-5	Level switch	Hot Sump high-high	H-High	Molten salt	Halotechnics	5 VDC	1mA	Haloswitch HT	HSLVL-24-0	0-5	V	Hot Pump
DI	LSL-1	Level Switch	Tank 1 Low	Low	Molten salt	Halotechnics	5 VDC	1mA	Haloswitch HT	HSLVL-24-0	0-5	V	Tank 1
DI	LSL-2	Level Switch	Tank 2 Low	Low	Molten salt	Halotechnics	5 VDC	1mA	Haloswitch HT	HSLVL-24-0	0-5	V	Tank 2
DI	LSL-3	Level Switch	Tank 3	Low	Molten salt	Halotechnics	5 VDC	1mA	Haloswitch HT	HSLVL-24-0	0-5	V	Tank 3
DI	LSL-4	Level Switch	Cold Sump	Low	Molten salt	Halotechnics	5 VDC	1mA	Haloswitch HT	HSLVL-24-0	0-5	V	Cold Pump
DI	LSL-5	Level Switch	Hot Sump Low	Low	Molten salt	Halotechnics	5 VDC	1mA	Haloswitch HT	HSLVL-24-0	0-5	V	Hot Pump
DI	LSLL-4	Level switch	Cold Sump Low-Low	L-Low	Molten salt	Halotechnics	5 VDC	1mA	Haloswitch HT	HSLVL-24-0	0-5	V	Cold Pump
DI	LSLL-5	Level switch	Hot Sump Low-Low	L-Low	Molten salt	Halotechnics	5 VDC	1mA	Haloswitch HT	HSLVL-24-0	0-5	V	Hot Pump
DI	ZSH-01	Limit Switch	Tank 1 inlet	OPEN	Electric	Flomax	5 VDC	0.1mA	FMXQ	FMXQ-3379	0-5	V	Tank 1
DI	ZSH-02	Limit Switch	Tank 2 inlet	OPEN	Electric	Flomax	5 VDC	0.1mA	FMXQ	FMXQ-3379	0-5	V	Tank 2
DI	ZSH-03	Limit Switch	Tank 3 inlet	OPEN	Electric	Flomax	5 VDC	0.1mA	FMXQ	FMXQ-3379	0-5	V	Tank 3
DI	ZSH-04	Limit Switch	Tank 1 outlet	OPEN	Electric	Flomax	5 VDC	0.1mA	FMXQ	FMXQ-3379	0-5	V	Tank 1
DI	ZSH-05	Limit Switch	Tank 2 outlet	OPEN	Electric	Flomax	5 VDC	0.1mA	FMXQ	FMXQ-3379	0-5	V	Tank 2
DI	ZSH-06	Limit Switch	Tank 3 outlet	OPEN	Electric	Flomax	5 VDC	0.1mA	FMXQ	FMXQ-3379	0-5	V	Tank 3
DI	ZSH-07	Limit Switch	Cold sump inlet	OPEN	Electric	Flomax	5 VDC	0.1mA	FMXQ	FMXQ-3379	0-5	V	Cold Pump
DI	ZSH-08	Limit Switch	Hot Sump inlet	OPEN	Electric	Flomax	5 VDC	0.1mA	FMXQ	FMXQ-3379	0-5	V	Hot Pump
DI	ZSH-09	Limit Switch	Discharge side isolation valve	OPEN	Electric	Flomax	5 VDC	0.1mA	FMXQ	FMXQ-3379	0-5	V	Main
DI	ZSH-10	Limit Switch	Charge side isolation valve	OPEN	Electric	Flomax	5 VDC	0.1mA	FMXQ	FMXQ-3379	0-5	V	Main
DI	ZSH-11	Limit Switch	Optional HX Coriolis inlet	OPEN	Electric	Flomax	5 VDC	0.1mA	FMXQ	FMXQ-3379	0-5	V	Main
DI	ZSH-12	Limit Switch	Optional HX Coriolis outlet	OPEN	Electric	Flomax	5 VDC	0.1mA	FMXQ	FMXQ-3379	0-5	V	Main
DI	ZSL-01	Limit Switch	Tank 1 inlet	CLOSE	Electric	Flomax	5 VDC	0.1mA	FMXQ	FMXQ-3379	0-5	V	Tank 1
DI	ZSL-02	Limit Switch	Tank 2 inlet	CLOSE	Electric	Flomax	5 VDC	0.1mA	FMXQ	FMXQ-3379	0-5	V	Tank 2
DI	ZSL-03	Limit Switch	Tank 3 inlet	CLOSE	Electric	Flomax	5 VDC	0.1mA	FMXQ	FMXQ-3379	0-5	V	Tank 3
DI	ZSL-04	Limit Switch	Tank 1 outlet	CLOSE	Electric	Flomax	5 VDC	0.1mA	FMXQ	FMXQ-3379	0-5	V	Tank 1
DI	ZSL-05	Limit Switch	Tank 2 outlet	CLOSE	Electric	Flomax	5 VDC	0.1mA	FMXQ	FMXQ-3379	0-5	V	Tank 2
DI	ZSL-06	Limit Switch	Tank 3 outlet	CLOSE	Electric	Flomax	5 VDC	0.1mA	FMXQ	FMXQ-3379	0-5	V	Tank 3
DI	ZSL-07	Limit Switch	Cold Sump inlet	CLOSE	Electric	Flomax	5 VDC	0.1mA	FMXQ	FMXQ-3379	0-5	V	Cold Pump
DI	ZSL-08	Limit Switch	Hot sump inlet	CLOSE	Electric	Flomax	5 VDC	0.1mA	FMXQ	FMXQ-3379	0-5	V	Hot Pump
DI	ZSL-09	Limit Switch	Discharge side isolation valve	CLOSE	Electric	Flomax	5 VDC	0.1mA	FMXQ	FMXQ-3379	0-5	V	Main
DI	ZSL-10	Limit Switch	Charge side isolation valve	CLOSE	Electric	Flomax	5 VDC	0.1mA	FMXQ	FMXQ-3379	0-5	V	Main
DI	ZSL-11	Limit Switch	Optional HX Coriolis inlet	CLOSE	Electric	Flomax	5 VDC	0.1mA	FMXQ	FMXQ-3379	0-5	V	Main
DI	ZSL-12	Limit Switch	Optional HX Coriolis outlet	CLOSE	Electric	Flomax	5 VDC	0.1mA	FMXQ	FMXQ-3379	0-5	V	Main
DO	FCZ-01	Valve Actuator	Tank 1 inlet		Electric	Flomax	120 VAC	3A	FMXQ	FMXQ-3379	0-5	V	Tank 1
DO	FCZ-02	Valve Actuator	Tank 2 inlet		Electric	Flomax	120 VAC	3A	FMXQ	FMXQ-3379	0-5	V	Tank 2
DO	FCZ-03	Valve Actuator	Tank 3 inlet		Electric	Flomax	120 VAC	3A	FMXQ	FMXQ-3379	0-5	V	Tank 3
DO	FCZ-04	Valve Actuator	Tank 1 outlet		Electric	Flomax	120 VAC	3A	FMXQ	FMXQ-3379	0-5	V	Tank 1
DO	FCZ-05	Valve Actuator	Tank 2 outlet		Electric	Flomax	120 VAC	3A	FMXQ	FMXQ-3379	0-5	V	Tank 2
DO	FCZ-06	Valve Actuator	Tank 3 outlet		Electric	Flomax	120 VAC	3A	FMXQ	FMXQ-3379	0-5	V	Tank 3
DO	FCZ-07	Valve Actuator	Cold Sump inlet		Electric	Flomax	120 VAC	3A	FMXQ	FMXQ-3379	0-5	V	Cold Pump
DO	FCZ-08	Valve Actuator	Hot Sump inlet		Electric	Flomax	120 VAC	3A	FMXQ	FMXQ-3379	0-5	V	Hot Pump
DO	FCZ-09	Valve Actuator	HX side		Electric	Flomax	120 VAC	3A	FMXQ	FMXQ-3379	0-5	V	Main

Type	Tag ID	Class	Location	Type	Service	Manufacturer	V Sup	I Sup	Model	PN	Range	Signal	Panel
DO	FCZ-10	Valve Actuator	FX side		Electric	Flomax	120 VAC	3A	FMXQ	FMXQ-3379	0-5	V	Main
DO	FCZ-11	Valve Actuator	Coriolis bypass inlet valve		Electric	Flomax	120 VAC	3A	FMXQ	FMXQ-3379	0-5	V	Main
DO	FCZ-12	Valve Actuator	Coriolis bypass outlet valve		Electric	Flomax	120 VAC	3A	FMXQ	FMXQ-3379	0-5	V	Main
DO	YZ-1	SCR	Tank 1 HTR-001	RELAY	Electric	Jameco	240 VAC	40A	176719	176719	3-32	V	Tank 1
DO	YZ-2	SCR	Tank 2 HTR-002	RELAY	Electric	Jameco	240 VAC	40A	176719	176719	3-32	V	Tank 2
DO	YZ-3	SCR	Tank 3 HTR-003	RELAY	Electric	Jameco	240 VAC	40A	176719	176719	3-32	V	Tank 3
DO	YZ-4	SCR	Tank 2 HTR-007	RELAY	Electric	Jameco	240 VAC	40A	176719	176719	3-32	V	Tank 2
DO	HTR-100	Heat Trace	Between Cold Sump and Charge side flowmeter	HTR	Electric	Thermon	240 VAC	5A	MI	MIQ-60E-1L-2S	n/a	n/a	Cold Pump
DO	HTR-101	Heat Trace	On Charge side flowmeter FM-2	HTR	Electric	Thermon	240 VAC	5A	MI	MIQ-60E-1L-2S	n/a	n/a	Cold Pump
DO	HTR-102	Heat Trace	Between Charge side flowmeter FM-2 and FX	HTR	Electric	Thermon	240 VAC	5A	MI	MIQ-60E-1L-2S	n/a	n/a	Main
DO	HTR-103	Heat Trace	HTR-103 Outlet of FX	HTR	Electric	Thermon	240 VAC	5A	MI	MIQ-60E-1L-2S	n/a	n/a	Main
DO	HTR-104	Heat Trace	HTR-104 Upstream of Charge side isolation valve	HTR	Electric	Thermon	240 VAC	5A	MI	MIQ-60E-1L-2S	n/a	n/a	Main
DO	HTR-105	Heat Trace	HTR-105 Charge side isolation valve	HTR	Electric	Thermon	240 VAC	5A	MI	MIQ-60E-1L-2S	n/a	n/a	Main
DO	HTR-106	Heat Trace	Charge side isolation valve and Tank 2 inlet, closest to FCV-10	HTR	Electric	Thermon	240 VAC	5A	MI	MIQ-60E-1L-2S	n/a	n/a	Main
DO	HTR-107	Heat Trace	Inlet gallery to Tank 1 inlet valve	HTR	Electric	Thermon	240 VAC	5A	MI	MIQ-60E-1L-2S	n/a	n/a	Main
DO	HTR-108	Heat Trace	HTR-108 Tank 1 inlet valve FCV-01	HTR	Electric	Thermon	240 VAC	5A	MI	MIQ-60E-1L-2S	n/a	n/a	Tank 1
DO	HTR-109	Heat Trace	HTR-109 Tank 1 vent pipe	HTR	Electric	Thermon	240 VAC	5A	MI	MIQ-60E-1L-2S	n/a	n/a	Tank 1
DO	HTR-110	Heat Trace	Outlet pipe between Tank 1 and FCV4	HTR	Electric	Thermon	240 VAC	5A	MI	MIQ-60E-1L-2S	n/a	n/a	Tank 1
DO	HTR-111	Heat Trace	Tank 1 outlet valve FCV-04	HTR	Electric	Thermon	240 VAC	5A	MI	MIQ-60E-1L-2S	n/a	n/a	Tank 1
DO	HTR-112	Heat Trace	Outlet gallery between Tank 1 and Cold Sump inlet pipe	HTR	Electric	Thermon	240 VAC	5A	MI	MIQ-60E-1L-2S	n/a	n/a	Main
DO	HTR-113	Heat Trace	Cold Sump inlet pipe and outlet gallery up to Tank 2 outlet junction	HTR	Electric	Thermon	240 VAC	5A	MI	MIQ-60E-1L-2S	n/a	n/a	Main
DO	HTR-114	Heat Trace	FCV-07 Cold Sump inlet valve	HTR	Electric	Thermon	240 VAC	5A	MI	MIQ-60E-1L-2S	n/a	n/a	Cold Pump
DO	HTR-115	Band heater	Between FCV-07 and Cold Sump vessel	HTR	Electric	Thermon	240 VAC	5A	MI	MIQ-60E-1L-2S	n/a	n/a	Cold Pump
DO	HTR-116	Clamshell heater	HTR-116 Cold Sump Right side Clamshell	HTR	Electric	Thermon	240 VAC	5A	MI	MIQ-60E-1L-2S	n/a	n/a	Cold Pump
DO	HTR-117	Clamshell heater	HTR-117 Cold Sump Left side Clamshell	HTR	Electric	Thermon	240 VAC	5A	MI	MIQ-60E-1L-2S	n/a	n/a	Cold Pump
DO	HTR-118	Heat Trace	Inlet gallery to Tank 2 inlet valve	HTR	Electric	Thermon	240 VAC	5A	MI	MIQ-60E-1L-2S	n/a	n/a	Main
DO	HTR-119	Heat Trace	Tank 2 tranfer pump pipe to FCV-05 Outlet valve	HTR	Electric	Thermon	240 VAC	5A	MI	MIQ-60E-1L-2S	n/a	n/a	Tank 2
DO	HTR-120	Heat Trace	Tank 2 Transfer pump outlet pipe	HTR	Electric	Thermon	240 VAC	5A	MI	MIQ-60E-1L-2S	n/a	n/a	Tank 2
DO	HTR-121	Heat Trace	FCV-05 Tank 2 outlet valve	HTR	Electric	Thermon	240 VAC	5A	MI	MIQ-60E-1L-2S	n/a	n/a	Tank 2
DO	HTR-122	Heat Trace	Between Tank 2 outlet valve (FCV-05) and Outlet gallery piping	HTR	Electric	Thermon	240 VAC	5A	MI	MIQ-60E-1L-2S	n/a	n/a	Main
DO	HTR-123	Heat Trace	Outlet gallery pipe between Tank 2 junction and Hot Sump Inlet valve	HTR	Electric	Thermon	240 VAC	5A	MI	MIQ-60E-1L-2S	n/a	n/a	Main
DO	HTR-124	Heat Trace	Between Tank 3 Outlet valve (FCV-06) and Hot Sump and gallery junction	HTR	Electric	Thermon	240 VAC	5A	MI	MIQ-60E-1L-2S	n/a	n/a	Main
DO	HTR-125	Heat Trace	From Inlet Gallery between Tank 2 and 3 to Tank 3 Inlet valve (FCV-03)	HTR	Electric	Thermon	240 VAC	5A	MI	MIQ-60E-1L-2S	n/a	n/a	Main
DO	HTR-126	Heat Trace	Inlet gallery from Tank 2 junction towards Tank 3	HTR	Electric	Thermon	240 VAC	5A	MI	MIQ-60E-1L-2S	n/a	n/a	Main
DO	HTR-127	Heat Trace	Inlet gallery between Discharge Isolation valve (FCV-09) and Tank 3 junction	HTR	Electric	Thermon	240 VAC	5A	MI	MIQ-60E-1L-2S	n/a	n/a	Main
DO	HTR-128	Heat Trace	Tank 3 vent pipe	HTR	Electric	Thermon	240 VAC	5A	MI	MIQ-60E-1L-2S	n/a	n/a	Tank 3
DO	HTR-129	Heat Trace	Outlet pipe between Tank 3 and FCV-06	HTR	Electric	Thermon	240 VAC	5A	MI	MIQ-60E-1L-2S	n/a	n/a	Tank 3
DO	HTR-130	Heat Trace	FCV-06 Tank 3 outlet valve	HTR	Electric	Thermon	240 VAC	5A	MI	MIQ-60E-1L-2S	n/a	n/a	Tank 3
DO	HTR-131	Heat Trace	HTR-131 Upstream of Discharge side isolation valve	HTR	Electric	Thermon	240 VAC	5A	MI	MIQ-60E-1L-2S	n/a	n/a	Main
DO	HTR-132	Heat Trace	HTR-132 Outlet of HX	HTR	Electric	Thermon	240 VAC	5A	MI	MIQ-60E-1L-2S	n/a	n/a	Main

Type	Tag ID	Class	Location	Type	Service	Manufacturer	V Sup	I Sup	Model	PN	Range	Signal	Panel
DO	HTR-133	Heat Trace	FCV-08 Hot Sump inlet valve	HTR	Electric	Thermon	240 VAC	5A	MI	MIQ-60E-1L-2S	n/a	n/a	Hot Pump
DO	HTR-134	Band heater	Between FCV-08 and Hot Sump vessel	HTR	Electric	Thermon	240 VAC	5A	MI	MIQ-60E-1L-2S	n/a	n/a	Hot Pump
DO	HTR-135	Clamshell heater	HTR-135 Hot Sump Left side Clamshell	HTR	Electric	Thermon	240 VAC	5A	MI	MIQ-60E-1L-2S	n/a	n/a	Hot Pump
DO	HTR-136	Clamshell heater	HTR-136 Hot Sump Right side Clamshell	HTR	Electric	Thermon	240 VAC	5A	MI	MIQ-60E-1L-2S	n/a	n/a	Hot Pump
DO	HTR-137	Heat Trace	Between Hot Sump and Discharge side flowmeter	HTR	Electric	Thermon	240 VAC	5A	MI	MIQ-60E-1L-2S	n/a	n/a	Hot Pump
DO	HTR-138	Heat Trace	On Disharge side flowmeter FM-3	HTR	Electric	Thermon	240 VAC	5A	MI	MIQ-60E-1L-2S	n/a	n/a	Hot Pump
DO	HTR-139	Heat Trace	Between Disharge side flowmeter FM-3 and HX	HTR	Electric	Thermon	240 VAC	5A	MI	MIQ-60E-1L-2S	n/a	n/a	Main
DO	HTR-140	Heat Trace	Optional line to Coriolis isolation valve (FCV-11)	HTR	Electric	Thermon	240 VAC	5A	MI	MIQ-60E-1L-2S	n/a	n/a	Main
DO	HTR-141	Heat Trace	Optional line from Coriolis isolation valve (FCV-12)	HTR	Electric	Thermon	240 VAC	5A	MI	MIQ-60E-1L-2S	n/a	n/a	Main
DO	HTR-142	Clamshell heater	HTR-142 HX Right side Clamshell	HTR	Electric	Thermon	240 VAC	5A	MI	MIQ-60E-1L-2S	n/a	n/a	Main
DO	HTR-143	Clamshell heater	HTR-143 HX Left side Clamshell	HTR	Electric	Thermon	240 VAC	5A	MI	MIQ-60E-1L-2S	n/a	n/a	Main
DO	HTR-144	Heat Trace	FCV-03 Tank 3 inlet valve	HTR	Electric	Thermon	240 VAC	5A	MI	MIQ-60E-1L-2S	n/a	n/a	Tank 3
DO	HTR-145	Heat Trace	FCV-02 Tank 2 inlet valve	HTR	Electric	Thermon	240 VAC	5A	MI	MIQ-60E-1L-2S	n/a	n/a	Tank 2
DO	HTR-146	Heat Trace	Optional Coriolis outlet isolation valve (FCV-12)	HTR	Electric	Thermon	240 VAC	5A	MI	MIQ-60E-1L-2S	n/a	n/a	Main
DO	HTR-147	Heat Trace	Optional Coriolis inlet isolation valve (FCV-11)	HTR	Electric	Thermon	240 VAC	5A	MI	MIQ-60E-1L-2S	n/a	n/a	Main
E	FM-2	Mass Flow Meter	Cold Sump outlet	MFM	Molten salt	Flexim	120VAC	5A	WaveInjector	FSQ-ENNTS-000	4-20 mA	4-20 mA	Cold Pump
E	FM-3	Mass Flow Meter	Hot Sump outlet	MFM	Molten salt	Flexim	120VAC	5A	WaveInjector	FSQ-NNNTS-000	4-20 mA	4-20 mA	Hot Pump
E	VFD-1	VFD	Cold Sump	VFD	Electric	AB Rockwell	240VAC	5A	PowerFlex	PowerFlex 523	E	E	Cold Pump
E	VFD-2	VFD	Hot Sump	VFD	Electric	AB Rockwell	240VAC	5A	PowerFlex	PowerFlex 523	E	E	Hot Pump
E	VFD-4	VFD	HX	VFD	Electric	AB Rockwell	240VAC	5A	PowerFlex	PowerFlex 523	E	E	Main
E	WAT-01	Temperature controller	FX heater	WAT	Electric	Watlow	240VAC	5A	EZ Flex		E	E	FX
E	WAT-OT-01	Temperature controller	FX heater Overtemp	WAT OT	Electric	Watlow	240VAC	5A	EZ Flex		E	E	FX
TC	TC-01	Thermocouple	FX outlet	TC	Molten salt	Omega	n/a	n/a	KMQXL	KMQXL-125E-12	0-54.819	mV	FX
TC	TC-02	Thermocouple	HX outlet	TC	Molten salt	Omega	n/a	n/a	KMQXL	KMQXL-125E-12	0-54.820	mV	Main
TC	TC-03	Thermocouple	At Charge side flow meter	TC	Molten salt	Omega	n/a	n/a	KMQXL	KMQXL-125E-12	0-54.821	mV	Cold Pump
TC	TC-04	Thermocouple	Discharge side flow meter /entrance to HX	TC	Molten salt	Omega	n/a	n/a	KMQXL	KMQXL-125E-12	0-54.822	mV	Hot Pump
TC	TC-05	Thermocouple	HX air inlet	TC	Air	Omega	n/a	n/a	KMQXL	KMQXL-125E-12	0-54.823	mV	Main
TC	TC-06	Thermocouple	Tank 1/HTR-001 Overtemp	TC	Air	Omega	n/a	n/a	KMQXL	KMQXL-125E-12	0-54.824	mV	Tank 1
TC	TC-07	Thermocouple	Tank 3/HTR-003 Overtemp	TC	Air	Omega	n/a	n/a	KMQXL	KMQXL-125E-12	0-54.825	mV	Tank 3
TC	TC-08	Thermocouple	Tank 1 HTR-001 Control	TC	Molten salt	Omega	n/a	n/a	KMQXL	KMQXL-125E-12	0-54.826	mV	Tank 1
TC	TC-09	Thermocouple	Tank 3 HTR-003 Control	TC	Molten salt	Omega	n/a	n/a	KMQXL	KMQXL-125E-12	0-54.827	mV	Tank 3
TC	TC-10	Thermocouple	Tank 2/HTR-002 Overtemp	TC	Molten salt	Omega	n/a	n/a	KMQXL	KMQXL-125E-12	0-54.828	mV	Tank 2
TC	TC-11	Thermocouple	FX Heater control	TC	Molten Salt	Omega	n/a	n/a	KMQXL	KMQXL-125E-12	0-54.829	mV	FX
TC	TC-12	Thermocouple	FX Heater Overtemp	TC	Air	Omega	n/a	n/a	KMQXL	KMQXL-125E-12	0-54.830	mV	FX
TC	TC-13	Thermocouple	HX air outlet	TC	Air	Omega	n/a	n/a	KMQXL	KMQXL-125E-12	0-54.831	mV	Main
TC	TC-14	Thermocouple	Tank 2 HTR-002 Control	TC	Molten salt	Omega	n/a	n/a	KMQXL	KMQXL-125E-12	0-54.832	mV	Tank 2
TC	TC-15	Thermocouple	Cold Sump salt temp	TC	Molten salt	Omega	n/a	n/a	KMQXL	KMQXL-125E-12	0-54.833	mV	Cold Pump
TC	TC-16	Thermocouple	Hot Sump salt temp	TC	Molten salt	Omega	n/a	n/a	KMQXL	KMQXL-125E-12	0-54.834	mV	Hot Pump
TC	TC-17	Thermocouple	Tank 2/HTR-007 Overtemp	TC	Molten salt	Omega	n/a	n/a	KMQXL	KMQXL-125E-12	0-54.835	mV	Tank 2
TC	TC-18	Thermocouple	Tank 2 HTR-007 Control	TC	Molten salt	Omega	n/a	n/a	KMQXL	KMQXL-125E-12	0-54.836	mV	Tank 2
TC	TC-100	Thermocouple	Between Cold Sump and Charge side flowmeter	TC	Air	Omega	n/a	n/a	KMQXL	KMQXL-125E-12	0-54.819	mV	Cold Pump
TC	TC-101	Thermocouple	On Charge side flowmeter FM-2	TC	Air	Omega	n/a	n/a	KMQXL	KMQXL-125E-12	0-54.820	mV	Cold Pump
TC	TC-102	Thermocouple	Between Charge side flowmeter FM-2 and FX	TC	Air	Omega	n/a	n/a	KMQXL	KMQXL-125E-12	0-54.821	mV	Main
TC	TC-103	Thermocouple	HTR-103 Outlet of FX	TC	Air	Omega	n/a	n/a	KMQXL	KMQXL-125E-12	0-54.822	mV	Main

Type	Tag ID	Class	Location	Type	Service	Manufacturer	V Sup	I Sup	Model	PN	Range	Signal	Panel
TC	TC-104	Thermocouple	HTR-104 Upstream of Charge side isolation valve	TC	Air	Omega	n/a	n/a	KMQXL	KMQXL-125E-12	0-54.823	mV	Main
TC	TC-105	Thermocouple	HTR-105 Charge side isolation valve	TC	Air	Omega	n/a	n/a	KMQXL	KMQXL-125E-12	0-54.824	mV	Main
TC	TC-106	Thermocouple	Charge side isolation valve and Tank 2 inlet, closest to FCV-10	TC	Air	Omega	n/a	n/a	KMQXL	KMQXL-125E-12	0-54.825	mV	Main
TC	TC-107	Thermocouple	Inlet gallery to Tank 1 inlet valve	TC	Air	Omega	n/a	n/a	KMQXL	KMQXL-125E-12	0-54.826	mV	Main
TC	TC-108	Thermocouple	HTR-108 Tank 1 inlet valve FCV-01	TC	Air	Omega	n/a	n/a	KMQXL	KMQXL-125E-12	0-54.827	mV	Tank 1
TC	TC-109	Thermocouple	HTR-109 Tank 1 vent pipe	TC	Air	Omega	n/a	n/a	KMQXL	KMQXL-125E-12	0-54.828	mV	Tank 1
TC	TC-110	Thermocouple	Outlet pipe between Tank 1 and FCV4	TC	Air	Omega	n/a	n/a	KMQXL	KMQXL-125E-12	0-54.829	mV	Tank 1
TC	TC-111	Thermocouple	Tank 1 outlet valve FCV-04	TC	Air	Omega	n/a	n/a	KMQXL	KMQXL-125E-12	0-54.830	mV	Tank 1
TC	TC-112	Thermocouple	Outlet gallery between Tank 1 and Cold Sump inlet pipe	TC	Air	Omega	n/a	n/a	KMQXL	KMQXL-125E-12	0-54.831	mV	Main
TC	TC-113	Thermocouple	Cold Sump inlet pipe and outlet gallery up to Tank 2 outlet junction	TC	Air	Omega	n/a	n/a	KMQXL	KMQXL-125E-12	0-54.832	mV	Main
TC	TC-114	Thermocouple	FCV-07 Cold Sump inlet valve	TC	Air	Omega	n/a	n/a	KMQXL	KMQXL-125E-12	0-54.833	mV	Cold Pump
TC	TC-115	Thermocouple	Between FCV-07 and Cold Sump vessel	TC	Air	Omega	n/a	n/a	KMQXL	KMQXL-125E-12	0-54.834	mV	Cold Pump
TC	TC-116	Thermocouple	HTR-116 Cold Sump Right side Clamshell	TC	Air	Omega	n/a	n/a	KMQXL	KMQXL-125E-12	0-54.835	mV	Cold Pump
TC	TC-117	Thermocouple	HTR-117 Cold Sump Left side Clamshell	TC	Air	Omega	n/a	n/a	KMQXL	KMQXL-125E-12	0-54.836	mV	Cold Pump
TC	TC-118	Thermocouple	Inlet gallery to Tank 2 inlet valve	TC	Air	Omega	n/a	n/a	KMQXL	KMQXL-125E-12	0-54.837	mV	Main
TC	TC-119	Thermocouple	Tank 2 tranfer pump pipe to FCV-05 Outlet valve	TC	Air	Omega	n/a	n/a	KMQXL	KMQXL-125E-12	0-54.838	mV	Tank 2
TC	TC-120	Thermocouple	Tank 2 Transfer pump outlet pipe	TC	Air	Omega	n/a	n/a	KMQXL	KMQXL-125E-12	0-54.839	mV	Tank 2
TC	TC-121	Thermocouple	FCV-05 Tank 2 outlet valve	TC	Air	Omega	n/a	n/a	KMQXL	KMQXL-125E-12	0-54.840	mV	Tank 2
TC	TC-122	Thermocouple	Between Tank 2 outlet valve (FCV-05) and Outlet gallery piping	TC	Air	Omega	n/a	n/a	KMQXL	KMQXL-125E-12	0-54.841	mV	Main
TC	TC-123	Thermocouple	Outlet gallery pipe between Tank 2 junction and Hot Sump Inlet valve	TC	Air	Omega	n/a	n/a	KMQXL	KMQXL-125E-12	0-54.842	mV	Main
TC	TC-124	Thermocouple	Between Tank 3 Outlet valve (FCV-06) and Hot Sump and gallery junction	TC	Air	Omega	n/a	n/a	KMQXL	KMQXL-125E-12	0-54.843	mV	Main
TC	TC-125	Thermocouple	From Inlet Gallery between Tank 2 and 3 to Tank 3 Inlet valve (FCV-03)	TC	Air	Omega	n/a	n/a	KMQXL	KMQXL-125E-12	0-54.844	mV	Main
TC	TC-126	Thermocouple	Inlet gallery from Tank 2 junction towards Tank 3	TC	Air	Omega	n/a	n/a	KMQXL	KMQXL-125E-12	0-54.845	mV	Main
TC	TC-127	Thermocouple	Inlet gallery between Discharge Isolation valve (FCV-09) and Tank 3 junction	TC	Air	Omega	n/a	n/a	KMQXL	KMQXL-125E-12	0-54.846	mV	Main
TC	TC-128	Thermocouple	Tank 3 vent pipe	TC	Air	Omega	n/a	n/a	KMQXL	KMQXL-125E-12	0-54.847	mV	Tank 3
TC	TC-129	Thermocouple	Outlet pipe between Tank 3 and FCV-06	TC	Air	Omega	n/a	n/a	KMQXL	KMQXL-125E-12	0-54.848	mV	Tank 3
TC	TC-130	Thermocouple	FCV-06 Tank 3 outlet valve	TC	Air	Omega	n/a	n/a	KMQXL	KMQXL-125E-12	0-54.849	mV	Tank 3
TC	TC-131	Thermocouple	HTR-131 Upstream of Discharge side isolation valve	TC	Air	Omega	n/a	n/a	KMQXL	KMQXL-125E-12	0-54.850	mV	Main
TC	TC-132	Thermocouple	HTR-132 Outlet of HX	TC	Air	Omega	n/a	n/a	KMQXL	KMQXL-125E-12	0-54.851	mV	Main
TC	TC-133	Thermocouple	FCV-08 Hot Sump inlet valve	TC	Air	Omega	n/a	n/a	KMQXL	KMQXL-125E-12	0-54.852	mV	Hot Pump
TC	TC-134	Thermocouple	Between FCV-08 and Hot Sump vessel	TC	Air	Omega	n/a	n/a	KMQXL	KMQXL-125E-12	0-54.853	mV	Hot Pump
TC	TC-135	Thermocouple	HTR-135 Hot Sump Left side Clamshell	TC	Air	Omega	n/a	n/a	KMQXL	KMQXL-125E-12	0-54.854	mV	Hot Pump
TC	TC-136	Thermocouple	HTR-136 Hot Sump Right side Clamshell	TC	Air	Omega	n/a	n/a	KMQXL	KMQXL-125E-12	0-54.855	mV	Hot Pump
TC	TC-137	Thermocouple	Between Hot Sump and Discharge side flowmeter	TC	Air	Omega	n/a	n/a	KMQXL	KMQXL-125E-12	0-54.856	mV	Hot Pump
TC	TC-138	Thermocouple	On Disharge side flowmeter FM-3	TC	Air	Omega	n/a	n/a	KMQXL	KMQXL-125E-12	0-54.857	mV	Hot Pump
TC	TC-139	Thermocouple	Between Disharge side flowmeter FM-3 and HX	TC	Air	Omega	n/a	n/a	KMQXL	KMQXL-125E-12	0-54.858	mV	Main
TC	TC-140	Thermocouple	Optional line to Coriolis isolation valve (FCV-11)	TC	Air	Omega	n/a	n/a	KMQXL	KMQXL-125E-12	0-54.859	mV	Main
TC	TC-141	Thermocouple	Optional line from Coriolis isolation valve (FCV-12)	TC	Air	Omega	n/a	n/a	KMQXL	KMQXL-125E-12	0-54.860	mV	Main
TC	TC-142	Thermocouple	HTR-142 HX Right side Clamshell	TC	Air	Omega	n/a	n/a	KMQXL	KMQXL-125E-12	0-54.861	mV	Main

Type	Tag ID	Class	Location	Type	Service	Manufacturer	V Sup	I Sup	Model	PN	Range	Signal	Panel
TC	TC-143	Thermocouple	HTR-143 HX Left side Clamshell	TC	Air	Omega	n/a	n/a	KMQXL	KMQXL-125E-12	0-54.862	mV	Main
TC	TC-144	Thermocouple	FCV-03 Tank 3 inlet valve	TC	Air	Omega	n/a	n/a	KMQXL	KMQXL-125E-12	0-54.863	mV	Tank 3
TC	TC-145	Thermocouple	FCV-02 Tank 2 inlet valve	TC	Air	Omega	n/a	n/a	KMQXL	KMQXL-125E-12	0-54.864	mV	Tank 2
TC	TC-146	Thermocouple	Optional Coriolis outlet isolation valve (FCV-12)	TC	Air	Omega	n/a	n/a	KMQXL	KMQXL-125E-12	0-54.865	mV	Main
TC	TC-147	Thermocouple	Optional Coriolis inlet isolation valve (FCV-11)	TC	Air	Omega	n/a	n/a	KMQXL	KMQXL-125E-12	0-54.866	mV	Main

	TOTALS
66	TC
4	AI
7	E
38	DI
64	DO

APPENDIX C:
REVISED HALOTANK DESIGN

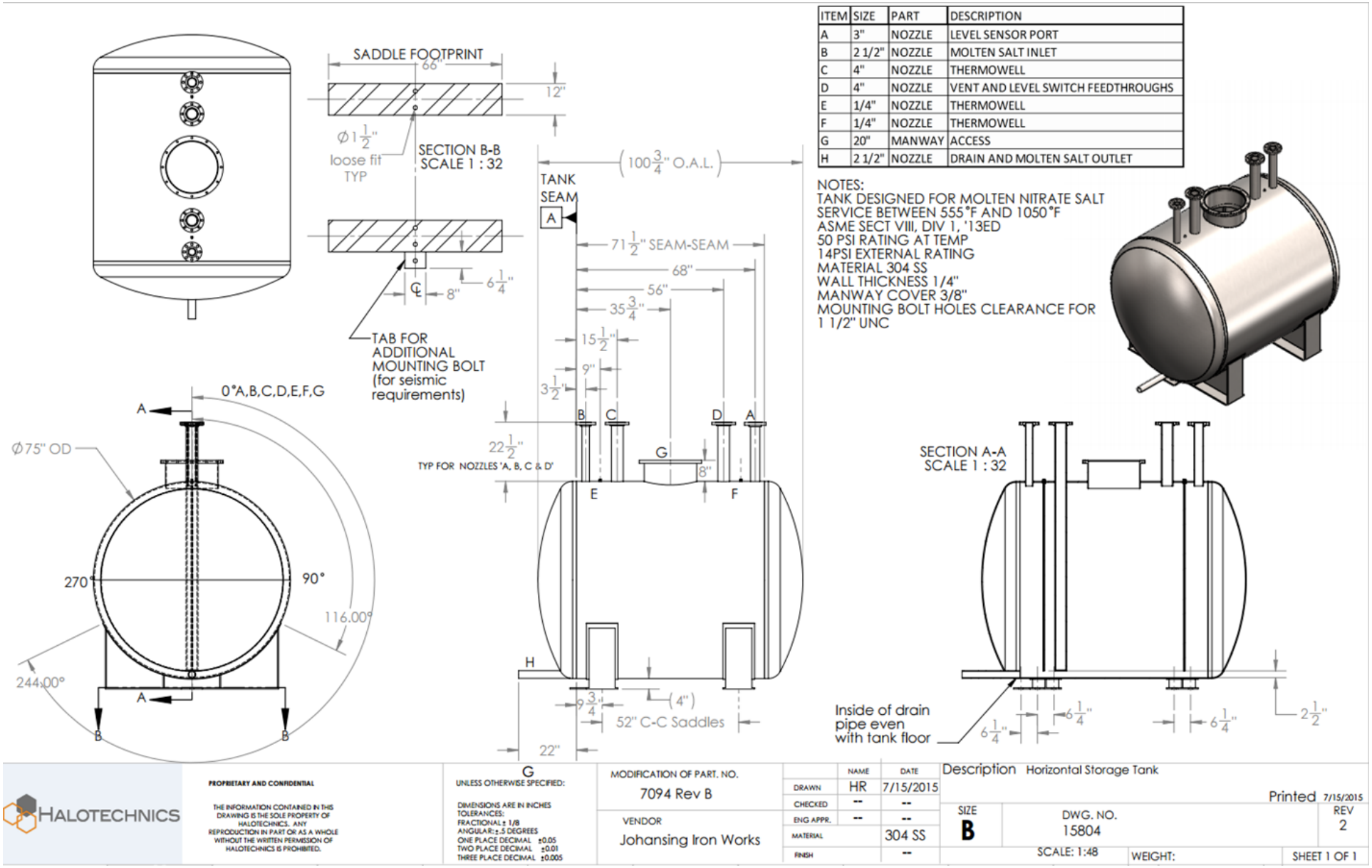

ITEM	SIZE	PART	DESCRIPTION
A	3"	NOZZLE	LEVEL SENSOR PORT
B	2 1/2"	NOZZLE	MOLTEN SALT INLET
C	4"	NOZZLE	THERMOWELL
D	4"	NOZZLE	VENT AND LEVEL SWITCH FEEDTHROUGHS
E	1/4"	NOZZLE	THERMOWELL
F	1/4"	NOZZLE	THERMOWELL
G	20"	MANWAY	ACCESS
H	2 1/2"	NOZZLE	DRAIN AND MOLTEN SALT OUTLET

APPENDIX D:
BILL OF MATERIALS

Subsystem	*Component*	*Vendor*	*Location*	*Lead Time [w]*	*Unit Cost*	*Qty*	*Total*
Swing Tank	Tank shell	Johansing	Oakland, CA	14	$ 27,400	2	$ 54,800
Swing Tank	Insulation - loose fill	Microtherm	Marysville, TN	10	$ 24,868	1	$ 24,868
Swing Tank	Insulation - conformal	Petrochem	Vallejo, CA	10	$ 55,655	1	$ 55,655
Swing Tank	Insulation - rigid saddle blocks	Microtherm	Maryville, TN	8	$ 1,833	2	$ 3,666
Swing Tank	Tank heater	Wattco	Canada	6	$ 8,925	2	$ 17,850
Swing Tank	10' container walls	Local	Oakland, CA	4	$ 5,881	1	$ 5,881
Swing Tank	Frame structural (blocks, beams)	ALCO	San Leandro, CA	0	$ 3,000	2	$ 6,000
Swing Tank	Frame sheet metal floor	MT Metal	San Leandro, CA	1	$ 1,500	2	$ 3,000
Swing Tank	Powder coating	Leon's	Oakland, CA	2	$ 1,300	2	$ 2,600
Swing Tank	Slider bearings	Fabreeka		2	$ 500	2	$ 1,000
Swing Tank	**Subtotal**						
Salt Pump	Pump, motor/frame, blind flange	Wenesco	Chicago, IL	10	$ 15,250	2	$ 30,500
Salt Pump	VFD for 3HP pump motor	Royal Wholesale	San Leandro, CA	1	$ 500	2	$ 1,000
Salt Pump	Sump components	Torq	Oakland, CA	6	$ 3,000	2	$ 6,000
Salt Pump	Immersion heater	Wattco	Canada	6	$ 5,794	2	$ 11,588
Salt Pump	Level switch	Halotechnics	Oakland, CA	2	$ 500	8	$ 4,000
Salt Pump	6-point TC	Omega	Stamford, CT	6	$ 675	2	$ 1,350
Salt Pump	Pump gasket	Gasket Specialties	Emeryville, CA	1	$ 85	2	$ 170
Salt Pump	Pump insulation	Pacific Insulation	Benicia, CA	1	$ 1,000	2	$ 2,000
Salt Pump	Pump frame	ALCO	San Leandro, CA	1	$ 1,000	2	$ 2,000
Salt Pump	**Subtotal**						
Heat exchangers	FX heater	Wattco	Canada	6	$ 18,574	1	$ 18,574
Heat exchangers	HX chiller	Hayden	San Bernadino, CA	18	$ 16,400	1	$ 16,400
Heat exchangers	Wiring - 480V 85 kW	San Leandro Elec	San Leandro, CA	0	$ 20	250	$ 5,000
Heat exchangers	VFD for xHP HX fan	Royal Wholesale	San Leandro, CA		$ 500	1	$ 500
Heat exchangers	HX air conduit			2	$ 25	100	$ 2,500
Heat exchangers	Insulation	Pacific Insulation	Benicia, CA	1	$ 1,000	2	$ 2,000
Heat exchangers	Frame	ALCO	San Leandro, CA	1	$ 1,000	2	$ 2,000
Heat exchangers	**Subtotal**						
Piping	Pipe, NPS 3/4 sch 40	Cal Steam	Emeryville, CA	2	$ 15	100	$ 1,500
Piping	Pipe, NPS 2-1/2 sch 40	Cal Steam	Emeryville, CA	2	$ 50	20	$ 1,000
Piping	Reducer, NPS 2-1/2 to 1	Cal Steam	Emeryville, CA	2	$ 100	10	$ 1,000
Piping	Reducer, NPS 1 to 3/4	Cal Steam	Emeryville, CA	2	$ 50	10	$ 500
Piping	Tee NPS 3/4	Cal Steam	Emeryville, CA	2	$ 100	10	$ 1,000
Piping	Elbow, NPS 3/4	Cal Steam	Emeryville, CA	2	$ 100	5	$ 500
Piping	Welding - fixturing			2	$ 2,500	1	$ 2,500
Piping	Welding - inspection			2	$ 200	5	$ 1,000
Piping	Heat trace / panel	Qcon	Concord, CA	4	$ 6,595	1	$ 6,595
Piping	Insulation	Pacific Insulation	Benicia, CA	1	$ 1,000	1	$ 1,000
Piping	Pipe supports / frame			2	$ 1,000	1	$ 1,000
Piping	**Subtotal**						
I&C	Electric gate valves	Flomax	, CA	14	$ 6,350	10	$ 63,500
I&C	Drain valves	Flomax	, CA	14	$ 3,685	2	$ 7,370
I&C	Thermocouples	Omega	Stamford, CT	4	$ 50	66	$ 3,300
I&C	Salt Flowmeter	JPR Systems	, CA	4	$ 20,971	1	$ 20,971
I&C	Air flowmeter	Dwyer	, CA	0	$ 140	1	$ 140
I&C	Level sensor	Rustco	Oakland, CA	8	$ 4,158	2	$ 8,316
I&C	Controls test rig - Dry Rig			4	$ 200	1	$ 200
I&C	Controls test rig - Wet Rig			4	$ 2,500	1	$ 2,500
I&C	Master control system	Royal Wholesale	San Leandro, CA	10	$ 24,809	1	$ 24,809
I&C	Control software license	Royal Wholesale	San Leandro, CA	0	$ 2,000	2	$ 4,000
I&C	**Subtotal**						
Salt inventory	Raw materials	Brenntag	Richmond, CA	**10**	$ 3	5000	$ 15,000
Salt inventory	Melting equipment				$ 5,000	1	$ 5,000
Salt inventory	Emission monitoring / controls				$ 5,000	1	$ 5,000
Salt inventory	Handling equipment rental				$ 5,000	1	$ 5,000
Salt inventory	**Subtotal**						
Subtotal							**$ 463,602**
Tax and delivery					10%		$ 46,360.24
Total Cost	**75 kW Cascade Demonstration Loop**	**Halotechnics**	**Emeryville, CA**	**72**	**$ 509,963**	**1**	**$ 509,962.65**

APPENDIX E:
SHIPPING CONTAINER HALOTANK SHELL

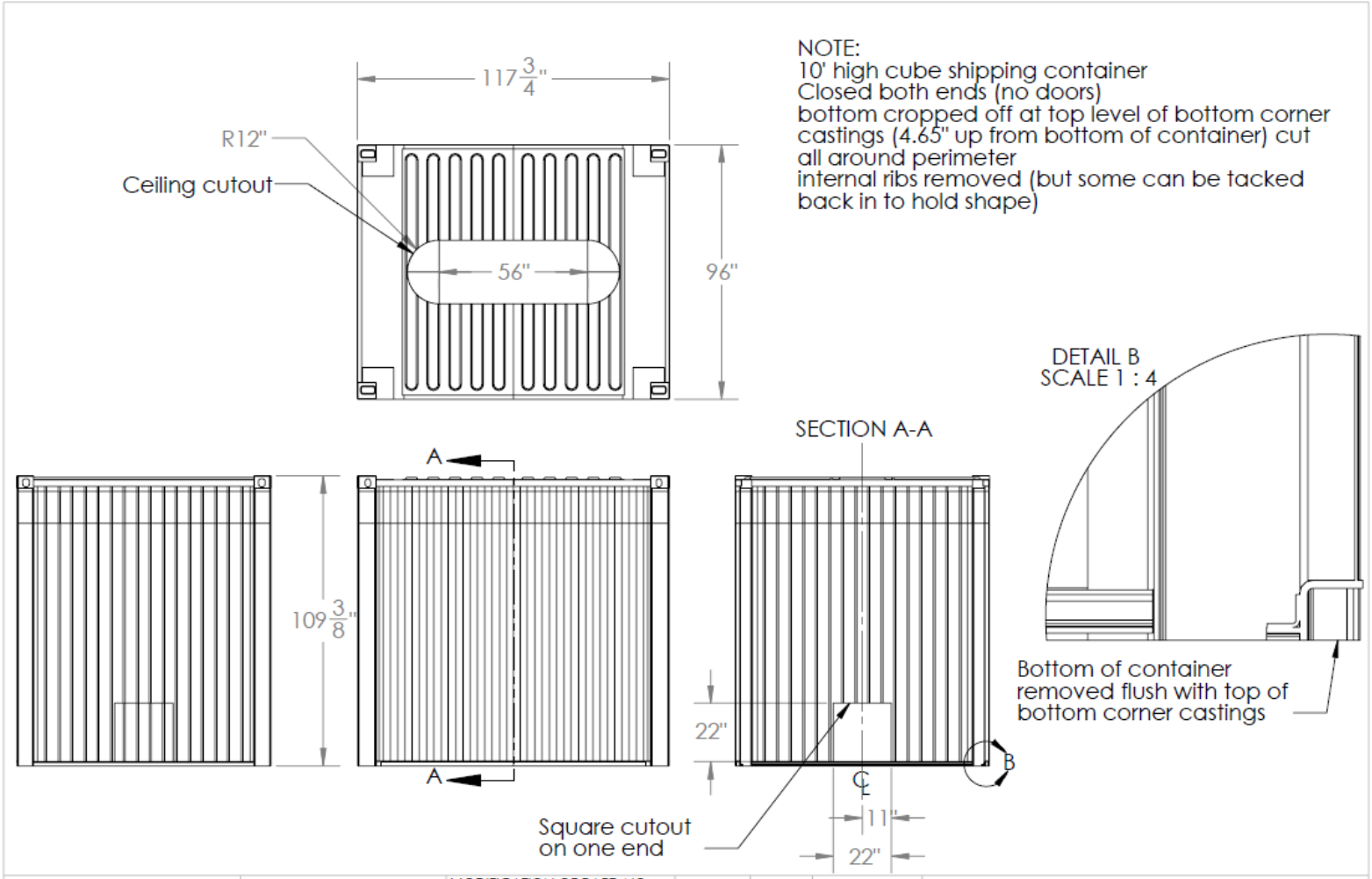

PROPRIETARY AND CONFIDENTIAL THE INFORMATION CONTAINED IN THIS DRAWING IS THE SOLE PROPERTY OF HALOTECHNICS. ANY REPRODUCTION IN PART OR AS A WHOLE WITHOUT THE WRITTEN PERMISSION OF HALOTECHNICS IS PROHIBITED.	UNLESS OTHERWISE SPECIFIED: DIMENSIONS ARE IN INCHES TOLERANCES: FRACTIONAL± 1/8 ANGULAR:±.5 DEGREES ONE PLACE DECIMAL ±0.05 TWO PLACE DECIMAL ±0.01 THREE PLACE DECIMAL ±0.005	MODIFICATION OF PART. NO. VENDOR		NAME	DATE	Description 10' High cube shipping container with closed ends trimmed to mount on skid
			DRAWN		1/17/2014	
			CHECKED	--	--	
			ENG APPR.	--	--	SIZE A / DWG. NO. / REV A.01
			MATERIAL			
			FINISH	--		SCALE: 1:50 / WEIGHT: / SHEET 1 OF 1

5 4 3 2 1

APPENDIX F:
DETAIL OF SEISMIC SUPPORT

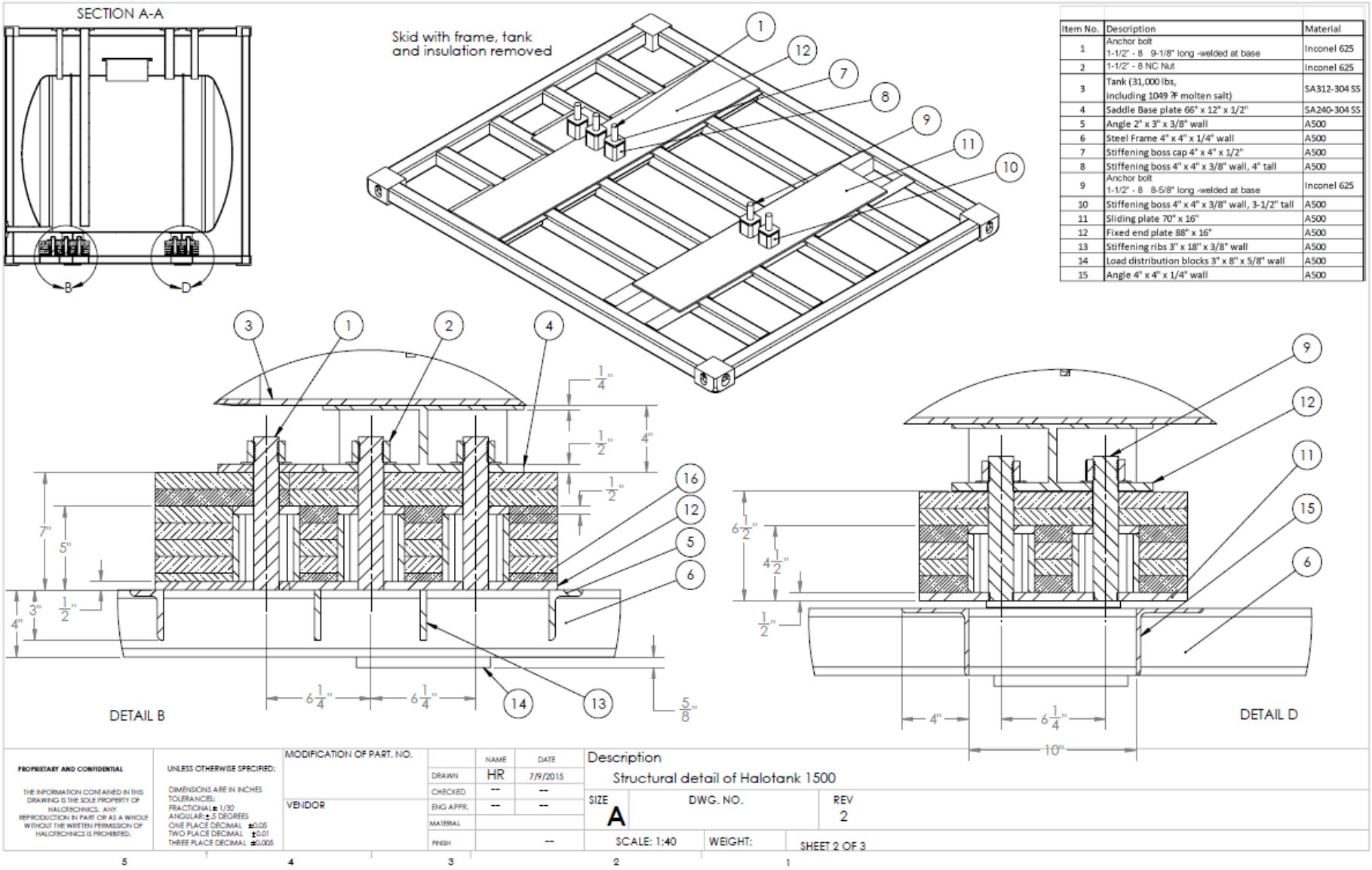

Item No.	Description	Material
1	Anchor bolt 1-1/2" - 8 9-1/8" long -welded at base	Inconel 625
2	1-1/2" - 8 NC Nut	Inconel 625
3	Tank (31,000 lbs, including 1049 ?F molten salt)	SA312-304 SS
4	Saddle Base plate 66" x 12" x 1/2"	SA240-304 SS
5	Angle 2" x 3" x 3/8" wall	A500
6	Steel Frame 4" x 4" x 1/4" wall	A500
7	Stiffening boss cap 4" x 4" x 1/2"	A500
8	Stiffening boss 4" x 4" x 3/8" wall, 4" tall	A500
9	Anchor bolt 1-1/2" - 8 8-5/8" long -welded at base	Inconel 625
10	Stiffening boss 4" x 4" x 3/8" wall, 3-1/2" tall	A500
11	Sliding plate 70" x 16"	A500
12	Fixed end plate 88" x 16"	A500
13	Stiffening ribs 3" x 18" x 3/8" wall	A500
14	Load distribution blocks 3" x 8" x 5/8" wall	A500
15	Angle 4" x 4" x 1/4" wall	A500

Detail of seismic support for Halotank skid

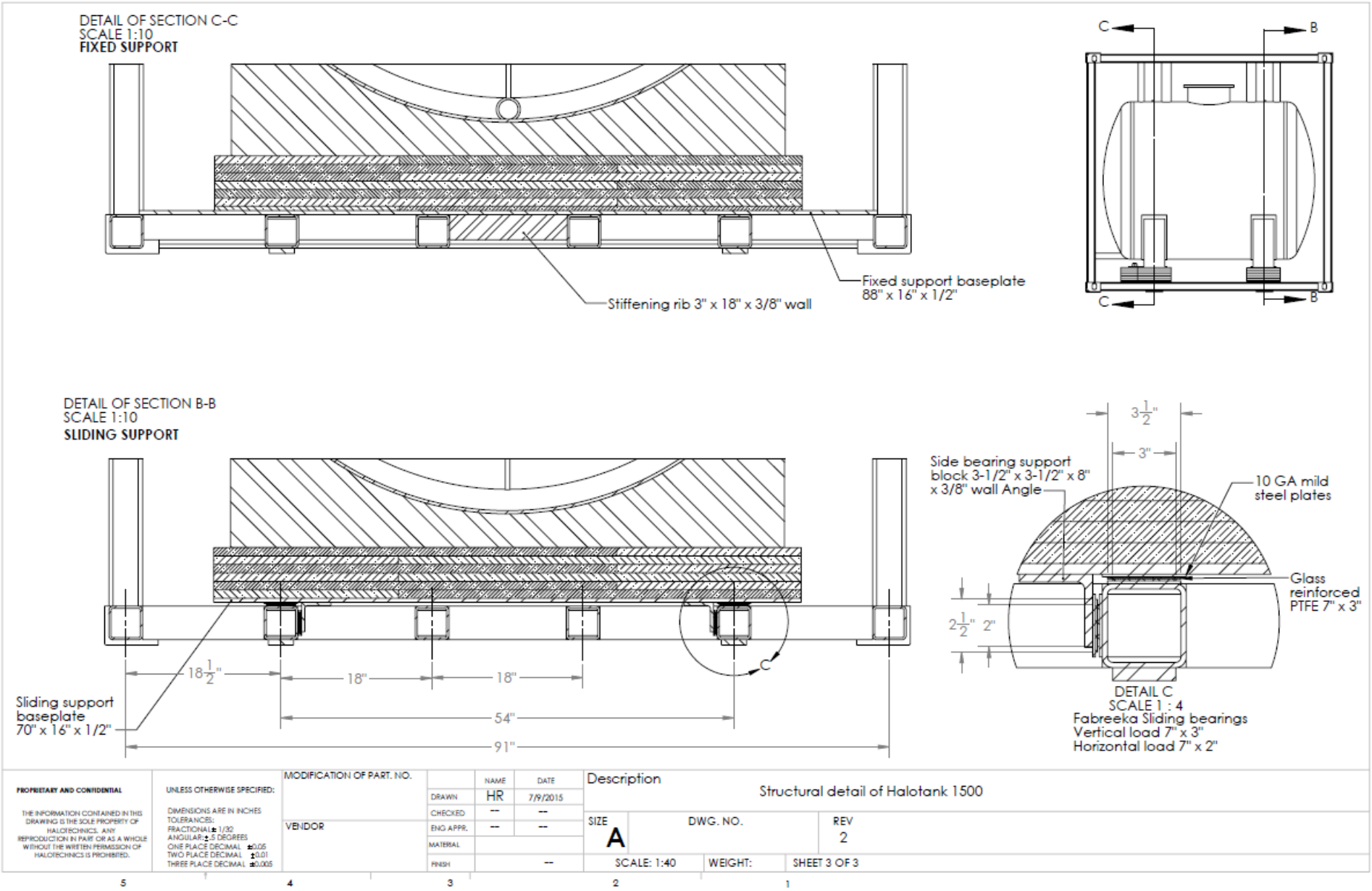

Additional detail of Seismic support for Halotank skid

APPENDIX G:
HALOTANK ASSEMBLY PROCEDURE

Prepare Powder Fill Skid assembly

Assembly starts with complete basic skid shown in Figure 19. First the sliding seal support braces are added as shown in Figure 20 and then the skid is ready to accept sheet metal floor panels.

Figure 19: Basic Skid Assembly

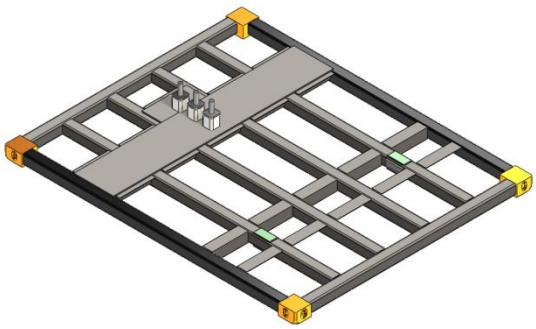

Figure 20: Skid with Sliding Seal Support Braces Ready for Sheet Metal

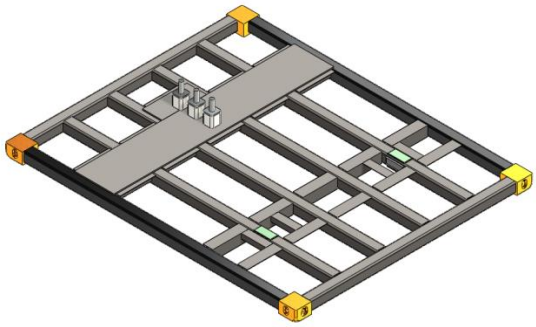

Next the sheet metal flooring is applied. The sheet metal is clamped into the correct position, centered on the frame, 3/16 inch holes are drilled through the sheet metal just reaching the beams and then the holes are plug welded to affix the floor to the frame. Hole spacing is approximate and is about 18 inches. Edges can be directly spot welded to the frame.

Figure 21 shows the sheet metal panels in place. The edges of the sheet metal are then sealed around the perimeter with silicone RTV cement. We will use Loctite Red RTV (McMaster P/N 7644A12).

Figure 21: Sheet Metal Installed on Skid

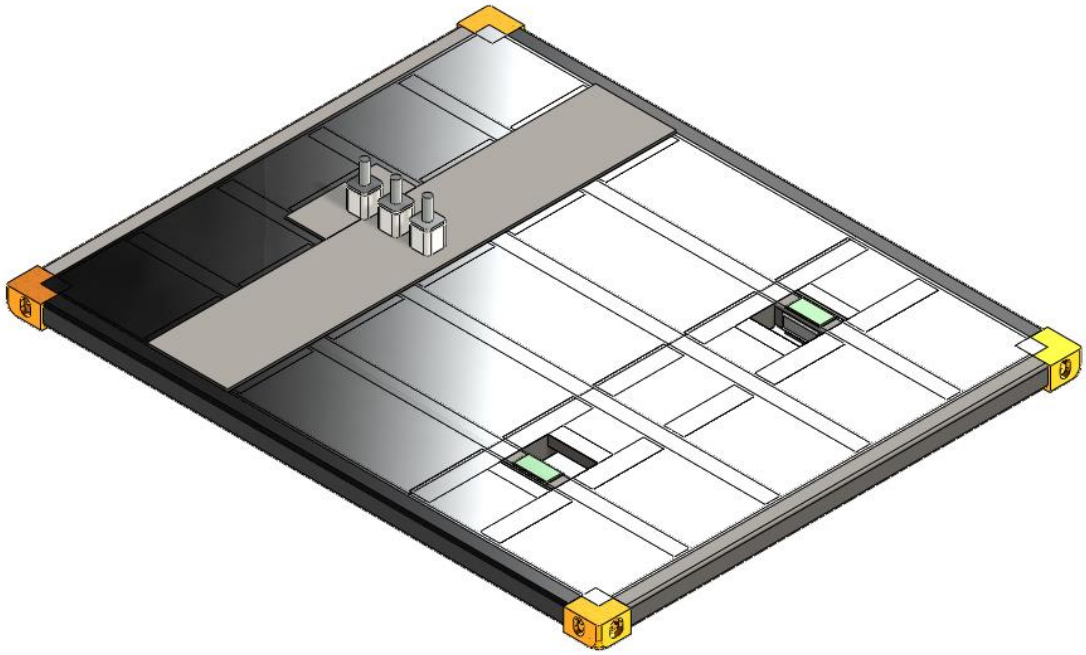

The sliding seals to prevent the Free Flow insulation powder from escaping around the sliding bearing can now be installed. First the inner frame is aligned with the holes in the sheet metal and tacked to the sheet metal on the inside, then the Teflon seals are mounted and then the outer seal retainer frame is mounted and tacked down on the outside of the Teflon. The seal and retainer frames are shown in Figure 22.

Figure 22: Detail of Sliding Seal and Retainer Frames

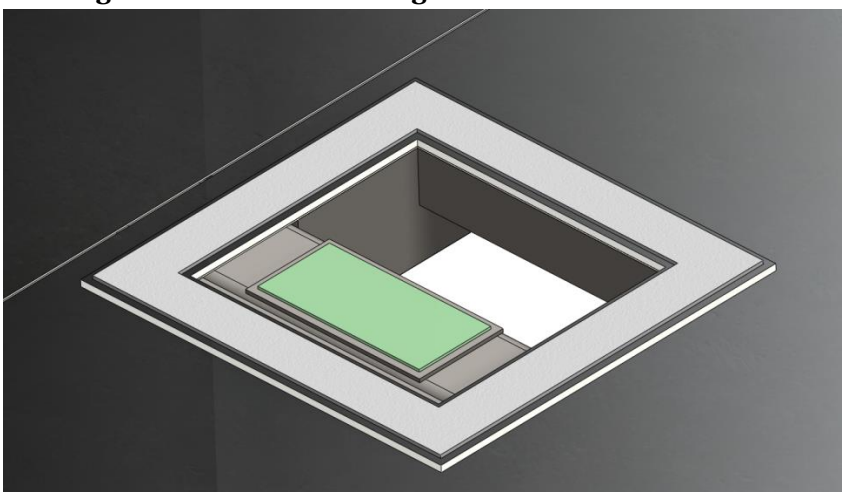

The polished stainless steel sealing surfaces are then mounted to the underside of the sliding plate assembly. They are gently tacked on around their perimeter. Figure 23 shows the sliding plate with the sheet metal sealing surfaces mounted and ready to be assembled.

Figure 23: Sliding Plate With Polished Seal Surfaces

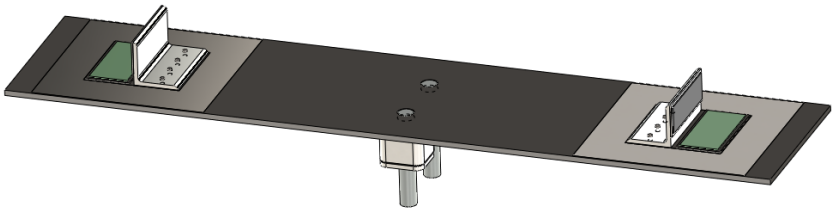

Mount sliding support panel

Measure from the centerline to precisely position one of the side bearings. This bearing can be tightened into position. The other side bearings is to be left loose to ease assembly.

Figure 24: Completed Powder Fill Skid Assembly

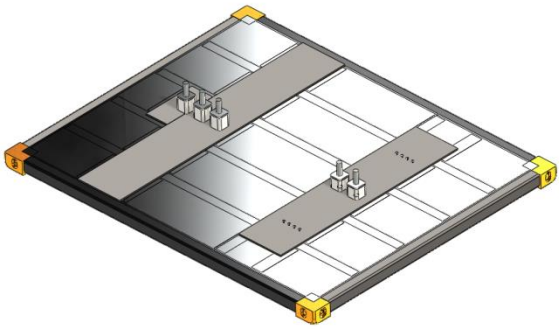

Once the sliding plate has been lowered onto the skid, it is to be squared against the side bearing on the pre tightened side and then the loose bearing can be tightened via the screws on top of the sliding plate.

Slide the plate towards the fixed end gently. Fore/Aft position can be fine-tuned to fit tank mounting holes later.

Add dense insulation blocks

The first insulation layer to add is the calcium silicate boards on the fixed end. These are panels 15809 and 15810. The dense Microtherm boards follow. The panels are glued together with the cement supplied by Promat. Assemble per Halotechnics drawing 15805.

Figure 25: Halotechnics Drawing 15805 Dense Insulation Blocks, Fixed End

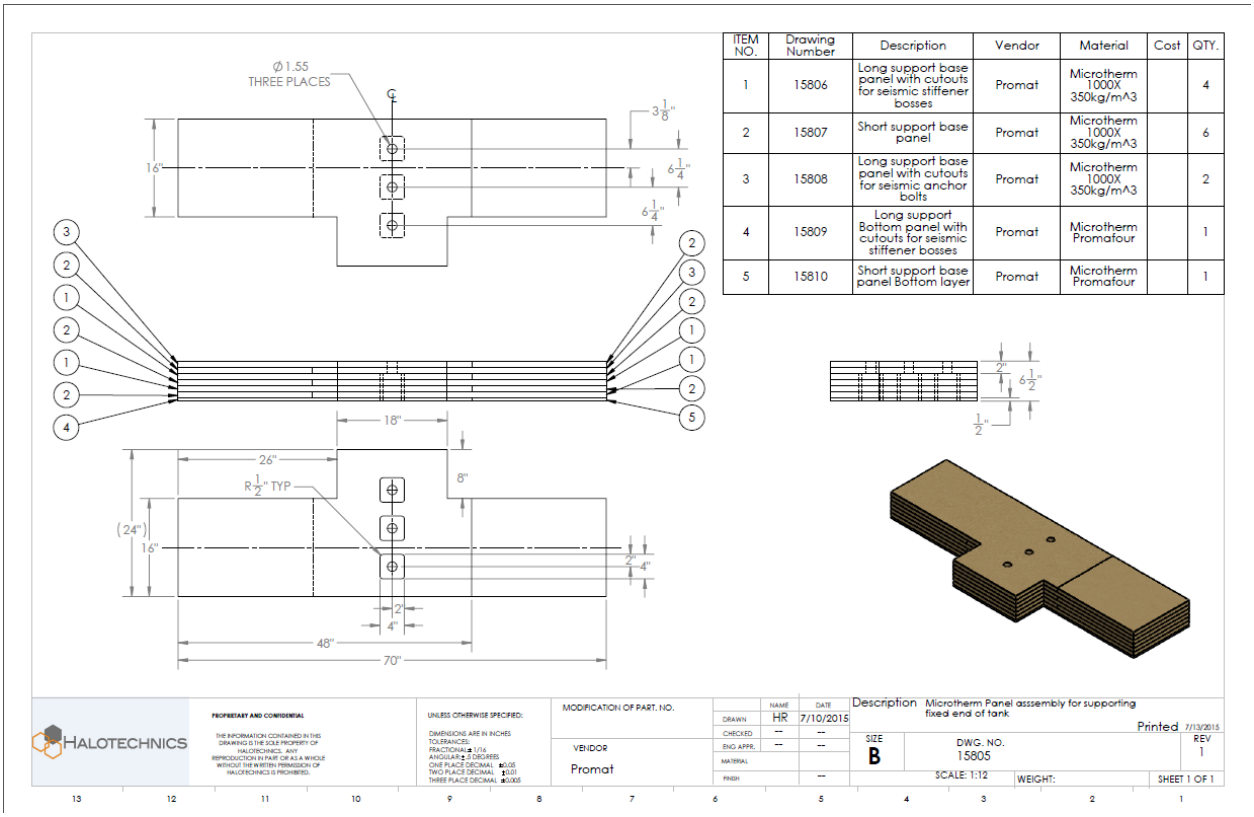

ITEM NO.	Drawing Number	Description	Vendor	Material	Cost	QTY.
1	15806	Long support base panel with cutouts for seismic stiffener bosses	Promat	Microtherm 1000X 350kg/m^3		4
2	15807	Short support base panel	Promat	Microtherm 1000X 350kg/m^3		6
3	15808	Long support base panel with cutouts for seismic anchor bolts	Promat	Microtherm 1000X 350kg/m^3		2
4	15809	Long support Bottom panel with cutouts for seismic stiffener bosses	Promat	Microtherm Promafour		1
5	15810	Short support base panel Bottom layer	Promat	Microtherm Promafour		1

The insulation blocks for the sliding end are mounted onto the sliding plate in similar fashion per Halotechnics drawing 15815.

Figure 26: Halotechnics Drawing 15815 Dense Insulation Blocks, Sliding End

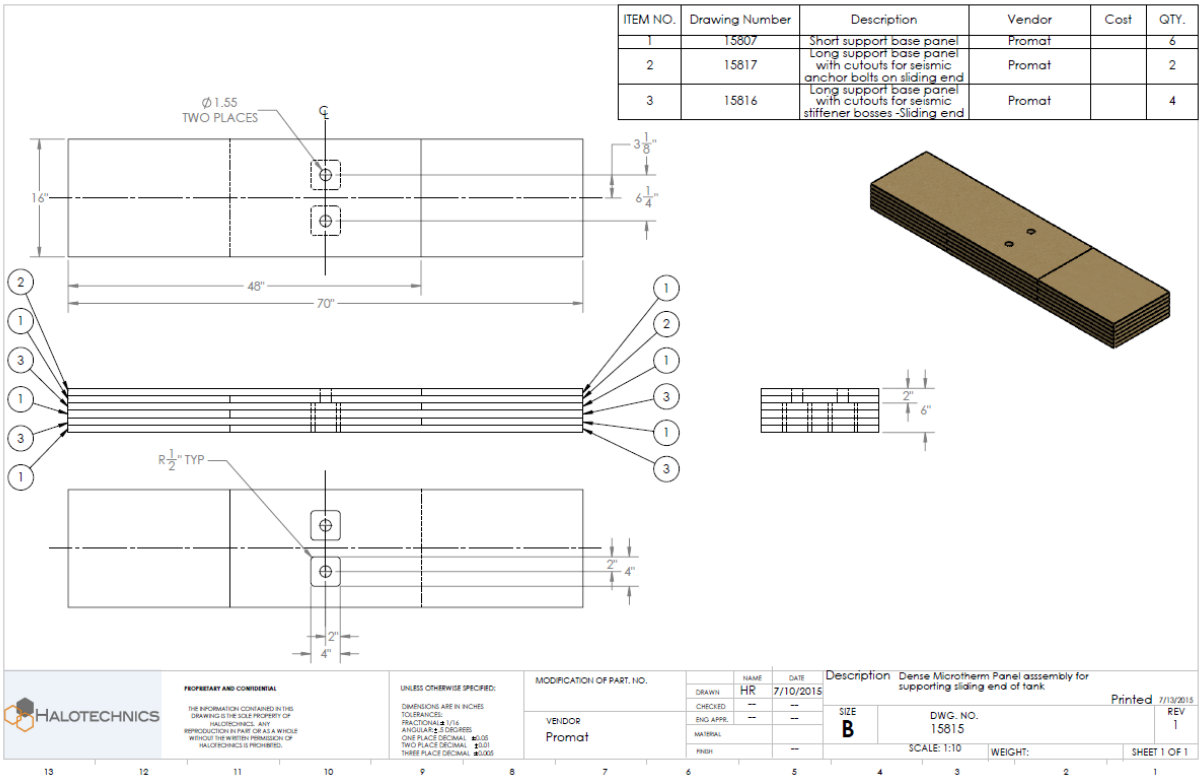

Figure 27: Powder Fill Skid Ready for Tank

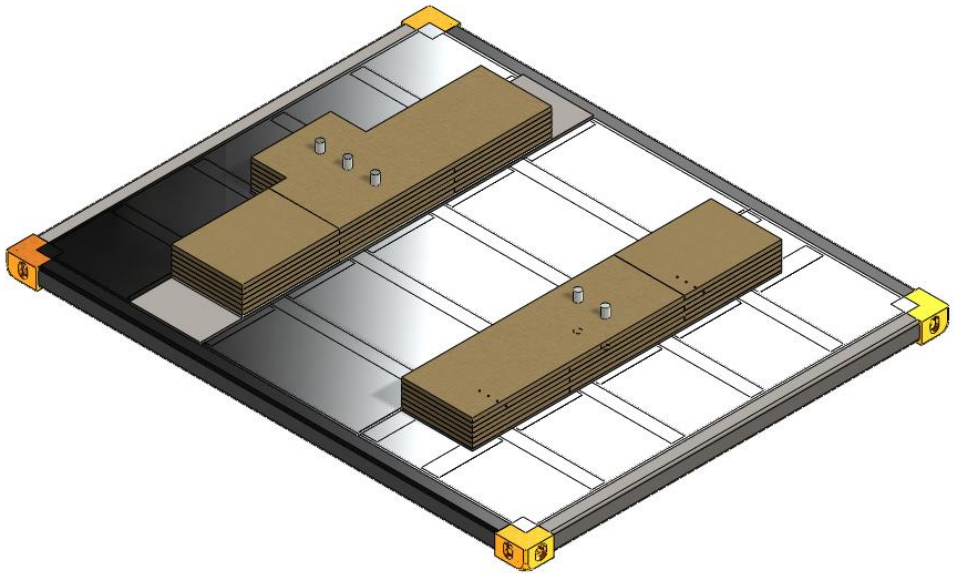

Land Tank on Dense Insulation Blocks

The skid should be placed onto caster supports to allow it to be moved under a suspended tank and positioned. The tank can be secured with nylon lifting straps around the girth and slowly

lowered by chain hoist from a gantry crane or ceiling beam onto the seismic restraint bolts of the skid once it is in position. Landed tank shown in Figure 28. The mounting nuts can now be placed and tightened (Spec tightness, not critical, just to retain tank during seismic event…)

Figure 28: Swing Tank Mounted on Powder Fill Skid

Weld on drain tube heatsink/thermowell

Use care not to warp drain outlet when stitch welding and fillet welding the thermowell to drain outlet pipe. See Figure 29.

Figure 29: Thermowell and Heat Sink for Drain Outlet Cartridge Heater

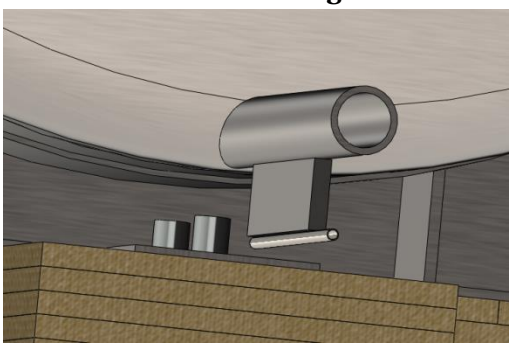

Install inner components of Drain gland

Slide the inner components of the tank outlet gland seal onto the drain outlet pipe. First the expanded metal retainer cage, then the SuperWool ceramic fiber insulation gland, then the oversized washer for the thermowell and then the Drain outlet sliding sheet. The cage will hold the SuperWool captive and it will pack with powder and form a filter to limit the escape of powder through the sliding metal seals.

This assembly is shown with the square sliding sheet and oversized washer already in place in Figure 30.

Figure 30: Drain Outlet Sealing System

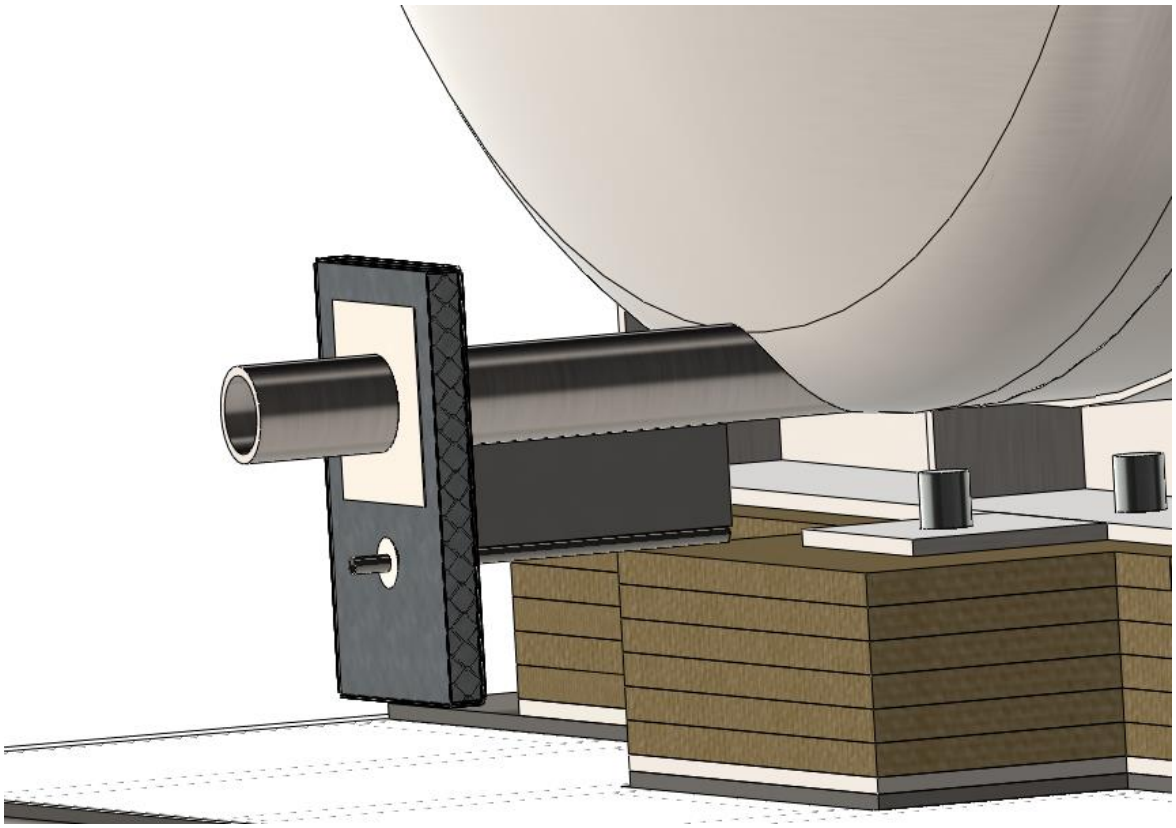

Assemble and weld powder fill skirt

Figure 31: Powder Skirt for Tank

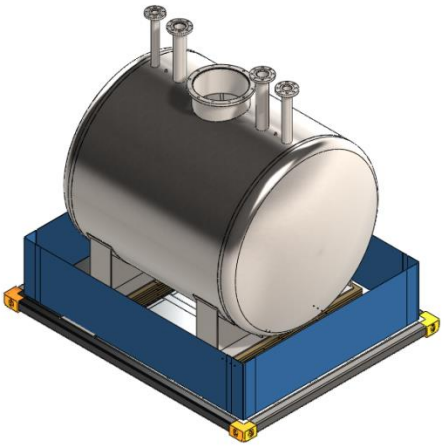

Figure 32: Powder Skirt at Drain Outlet

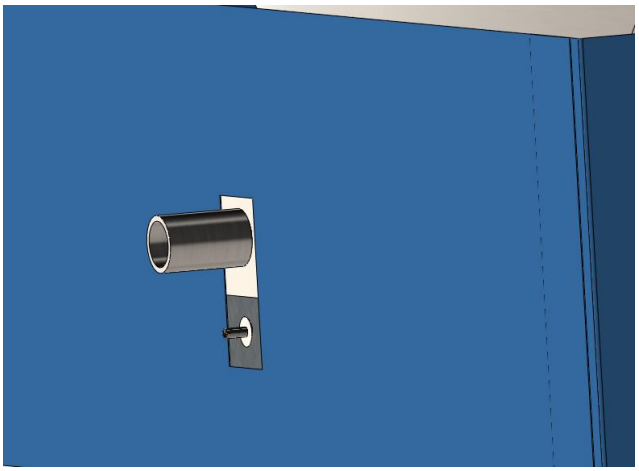

The purpose of the powder skirt assembly (Figure 31, Figure 32) is to allow the underside of the tank to be packed with Free Flow insulation before the shipping container walls are put on. This allows free access to use tools and hands to work the insulation powder into all the cavities under the tank.

The powder skirt is made from 8 pieces of sheet metal, 4 flat and 4 bent corners. One of the end pieces will be modified in-house for the cutout needed for the drain outlet. The skirt is centered on the frame and is equidistant from the ends and sides. The drain end is mounted first, then the corners and then the walls and following corners and end panel. The sheet metal can be tacked into position and then stitched into place. The seams are then to be sealed against powder with Loctite Red RTV (McMaster P/N 7644A12).

Install backplane of Drain gland feedthrough

The stiff backplane for the drain feedthrough shown in Figure 33 can be mounted over the drain outlet now. This piece is spot welded to the floor and to the powder skirt, it is heavy gauge and provides stiffness to keep feedthrough from deforming when full. It is the same gauge as the feedthrough frame and slightly oversized to facilitate welding the two together.

Figure 33: Drain Feedthrough Backplane

Install frame braces and rubber seal on skid ends

Next, the frame end braces are tacked and then welded on to both ends of the skid as shown in Figure 33. These 3/8" X 1" strips give a solid landing for variations in shipping container geometry. They should be fully welded to the 4 X 4 skid frame for full strength. They can be V groove welded from above and then just stitched below the brace.

Figure 34: Container End Brace and Foam Seal

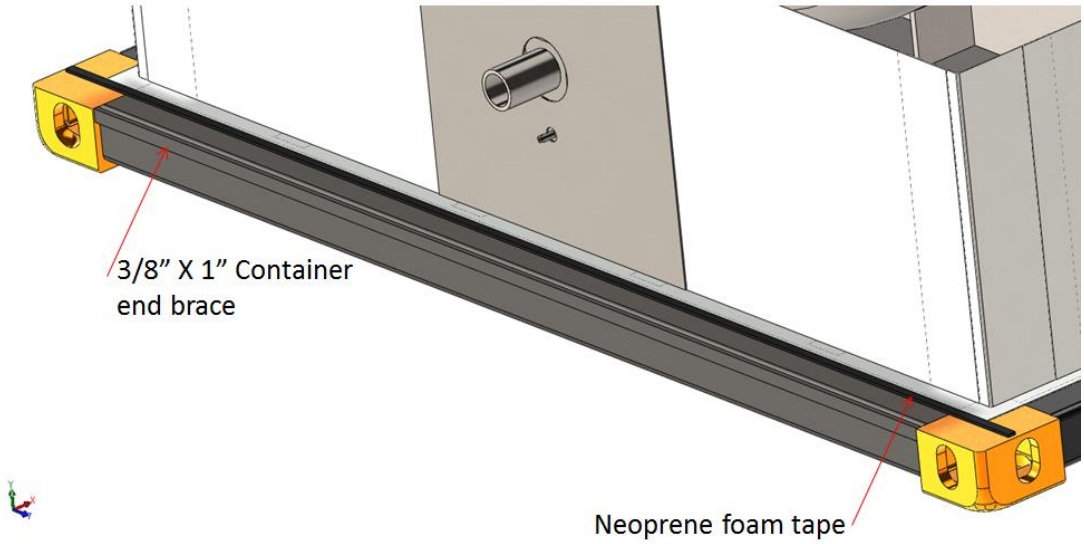

The rubber seal is to prevent powder from filling the cavity in the beam at the container ends. It is not critical, but will help to prevent undesired settling of the powder. It is applied up against the edge of the floor sheet metal on both ends of the skid. The rubber foam tape (McMaster-Carr P/N
93375K37) is applied to 3/8” from the edge of the corner castings as seen in Figure 34.

Fill powder skirt with insulation

The system is now ready to be filled with Free Flow insulation. Move tank/skid assembly into plastic insulation room and start the room’s dust collection system. If clean filters are used, the dust collected can be recycled back into the fresh insulation supply. The Supersack should be fitted with its discharge hose while on the ground and connected to the diaphragm pump and filling hose.

Figure 35: Typical Dry Powder Diaphragm Pump (TapFlo Shown)

Use the filling hose to direct the powder fill into the recesses of the saddles underneath the tank first. Once a suitable depth of powder has been achieved under the tank, use a shovel (paddle) to pack it into the recesses. Add more powder and repeat. If needed, the pneumatic vibrator can be used on the tank saddles and walls of the powder skirt to encourage settling of the powder.

Figure 36: Tank with Filled Powder Skirt Waiting for Container Shell to be Mounted

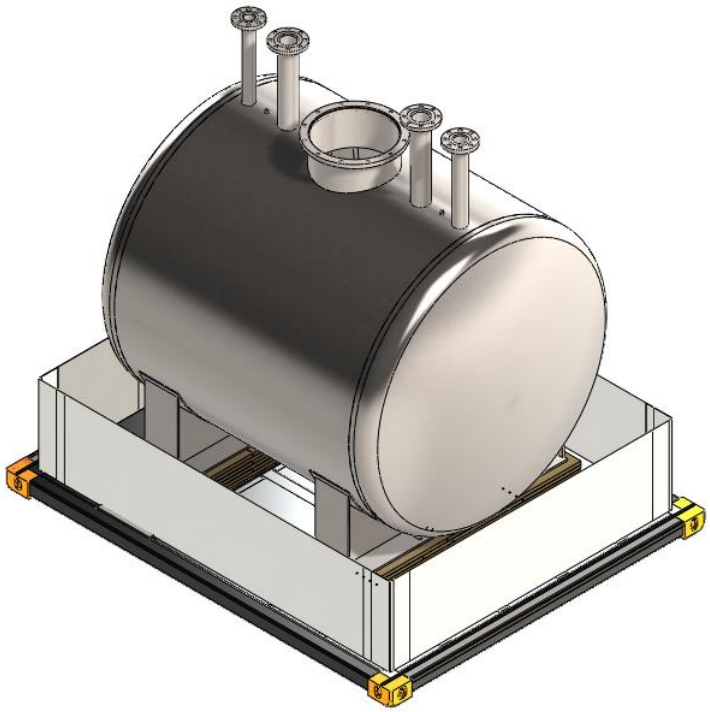

Lower on and align shipping container body

Support shipping container shell from top corner castings and raise (level) with chain hoist above height of tank flanges. Mark powder fill elevations with tape on all four walls. Heights to mark are shown in Table 5. Measurements are made from cut bottom edge of shipping container shell. This will allow for crosschecking of the pack density of the powder as the container is filled.

Table 5: Depth of Free Flow Insulation by Sack-Full Super sack number	Interior height of powder at 260kg/m^3 (in)
4	AB
5	BC
6	CD
7	EF
8	GH
9	IJ

Move tank/skid under hanging shipping container shell. Lower shell down slowly onto skid and center onto skid before releasing all weight.

Figure 37: Shipping Container Shell Lowered onto Skid

Weld on shipping container body

Lever into position and tack weld perimeter of shipping container shell. When secure and aligned, the bottom edges can be stitched and then fully welded. Avoid leaving holes where powder could escape. The frame for the drain outlet portal can now be welded fully to the backplane and shipping container end wall and floor.

Figure 38: Frame for Drain Outlet Portal

Fill remainder of container checking volume at regular intervals.

The shipping container is now ready for the final fill. Dispense powder around the perimeter of the tank evenly and use the exterior vibrator and the concrete vibrator to settle the Free Flow to the level of the tape indicators for each supersack. Do not continue to next Supersack until the prior sack has been fully packed. This will ensure the target density of 260 kg/m^3.

Equipment:

Dust filtration

Dry powder diaphragm pump for Free Flow

Concrete vibrator:

Harbor Freight Item#42947

http://www.harborfreight.com/power-tools/concrete-vibrators/concrete-vibrator-42947.html

Shovel / Paddle

Surface vibration

- Mc Master-Carr 5807K7 Iron Air-Powered Vibrator for Dry Materials, Base Mount, Top Inlet, 275 lbs. Force

APPENDIX H:
SOFTWARE REQUIREMENTS SPECIFICATION

CONTROL SYSTEM DESCRIPTION

The control system is capable of running the charging and discharging of the TES system automatically. It controls the flow of salt across the system with pumps and gate valves that can destination of charged or discharged salt. It controls the heat input to and rejection from the molten salt through two separate heat exchangers (an electric heater and an air cooler).

There are two automatic modes and one manual mode of operation of the control system, which provides operational flexibility during the control system development. These three modes are described in further detail in this document.

More information on the control sensors and actuators and their location can be found in the IO List in Appendix B.

a. Sensors and Instrumentation

Several sensors and actuators are required to enable the automatic switching of tanks which constitutes the essence of the three-tank system.

Each tank is equipped with a level sensor and a temperature probe, which informs the master control system of the state of each tank. This information is used to direct the flow of salt during each part of the cycle.

b. Actuators

Several actuators are required to enable the automatic switching of tanks.

CONTROL SYSTEM

The MCTES Control System is a distributed control system (DCS). To reduce wiring and complexity it is desired that each tank have its own micro controller responsible for all signals within its domain. Subsystems will be linked to the master controller via ModBus RS-485 or other appropriate COM line. The Master controller will coordinate all tanks and pump activity. Each distributed node will be responsible for connectivity, health, operation and maintenance of its own subsystem. For example, each tank controller contains at least one temperature controller. The node receives a temperature command from the master and the node controls the tank to the required temperature. The node reports health and status to the Master Controller upon request. The COM line is a dependency for stable operation. Therefore each distributed control node will have a communication watchdog installed to monitor continuity of the COM line. If the COM line ever goes down, the sub-system and Master will take the appropriate FAULT action.

Error! Reference source not found. is a diagram layout of the hierarchy of the MCTES control ystem layout.

LOAD CONTROL STRATEGIES

At the time of this document there are two potential load control strategies for the MCTES system, “Load Follow” and “Load Control.” The demonstration system uses a simulated Cold and Hot source for Salt Charge (heating) and Discharge (cooling). A typical Charging system may be a hot source from a waste heat process such as a coal fired power plant, aluminum smelting, etc. or it may be simply an electrical heater powered from the grid. Conversely a typical Discharge process may be a waste heat recovery input to an industrial process or steam generator for electrical generation. Each of these input sources may require special consideration to the load control.

a. Load Control

Load control implies that the MCTES system controls the load of the Charge and Discharge Input Sources. Meaning that the MCTES system has the direct ability to control the heating load as it needs based on its set mass flow rate. This may work for fast responding systems and systems that have the ability to be changed at a moment’s notice such as an electrical heater. However it may not work for waste heat processes that are the result of a production line. In this case we need a load following strategy.

b. Load Follow

Load Following implies that the MCTES system responds to the load conditions of the heat source. If the load source changes temperature or shuts off, the MCTES system is expected to follow. The simplest method of following the load is to respond based on the output temperature of the load source. For example, in the Charge case, as temperature rises, increase flow rate to compensate, as temperature drops, reduce flow rate. In more complex cases this could be a COM line command to the MCTES control system.

CONTROL LOOPS

Each Subsystem controller contains one or more control loops. The control loops are PID feedback loops. Typical loops are pump control loops and temperature control loops.

c. PUMP CONTROL LOOPS

The pump control loop sets the desired flow rate of salt across the system. It is a feedback control loop which uses a VFD to spin the pump motor. At the time of this document there are two potential feedback options based on the two proposed load control strategies. In the “Load Control” case, feedback is an Ultrasonic flowmeter on the output of the pump which directly measures flow rate. In the “Load Follow” case, feedback is a temperature sensor, responding to changes in the output of the FX or HX device. In the case of the Flow meter, the nominal target flow rate is 0.18 kg/s (1.51 GPM), and is adjustable if needed.

d. TEMPERATURE CONTROL LOOPS

Multiple temperature control loops are needed to operate the system, and serve two main purposes: heat addition (FX control) and freeze protection (tanks and piping heat trace).

i. TANK INTERNAL TEMPERATURE CONTROL LOOP

The three molten salt storage tanks are equipped with immersion heaters for freeze protection and for maintaining salt temperature during thermal storage. An expected 3.2 kW of heat loss is expected at 565˚C. The tank temperature control loop is expected to maintain this setpoint temperature.

ii. HEAT TRACE TEMPERATURE CONTROL LOOP

In order to prevent freezing of salt in the lines during operation, the piping system is equipped with electric heaters to maintain the plumbing at a temperature of 280˚C, or 40˚ above the melting point of the salt. The set point is slightly below the lowest operating temperature of 290˚C, which ensures that the trace heaters will turn off while the system is operating. The heat trace temperature control loop is a feedback control loop which uses an electric heater wrapped around the piping and feedback from a k-type thermocouple welded to the piping.

In order to assist in starting salt flow in the HX, a heat trace heater is also installed in the area of the HX plumbing. The hardware for the heater is not fully defined yet. This heater is responsible for bringing the piping temperature above the freeze point of the salt before the cooling air is turned on and before molten salt is directed to the HX.

iii. FX TEMPERATURE CONTROL LOOP

In the case of "Load Control" strategy, an FX Temperature Loop will be necessary as part of the master controller. In the case of a "Load Following" control strategy the FX loop will be part of an external control system. For the demonstration system the general heat load for the FX is a 75 kW process heater which heats the salt from 290˚C to 565˚C.

CONTROL SYSTEM FEATURES

The MCTES control system as a whole is a collective of hardware, software, network, sensors, interfaces, data collection and applications enabling operability. This section discusses features of the MCTES control system as it pertains to general requirements. Below is the list of features.

e. Provide Control in multiple modes

Software shall provide several modes of operation and activation of these modes can be changed at any time by toggling a setting on the user interface.

i. Manual

In manual control mode, all equipment settings are inputted by the operator. The operator is responsible for setting

- The RPM for the hot pump and the cold pump and the HX fan
- The valve positions for all 10 gate valves and the HX butterfly valve
- Temperature set points for

- The FX outlet temperature
- The three tanks
- The HX heat trace
- The 30 zones of piping heat trace

Information from all the sensors is displayed on the HMI.

In manual control mode, no automatic protections are active and it is therefore left to the operator to ensure the safe operation of the system. Define which safety features are active in this mode. Pressure relief valve / overflow valve / hardware solution? Define software override of safety features in manual mode.

ii. Two tank control

This control mode is intended to replicate a typical two-tank system configuration. In this mode, one tank is identified as the cold tank, one tank is identified as the hot tank, and the charging or discharging operation proceeds as is the case with a traditional system.

In this mode, the inputs are manually entered by the operator via the HMI, and consist of:

- The cold tank
- The hot tank
- The command to charge (heat addition) or discharge (heat rejection)

A "charge" command will cause the control system to connect the cold tank to the cold pump, pump salt through the FX, and direct the hot salt to the hot tank by opening the appropriate valves in the selected flow path.

Conversely, a "discharge" command will cause the control system to connect the hot tank to the hot pump, pump salt through the HX, and direct the cold salt to the cold tank by opening the appropriate valves in the selected flow path.

Once the three parameters have been selected, the two-tank control system will automatically perform a sequence of events and a series of checks on the selected flow path, start the flow of salt, and maintain salt flow until the operation is complete.

The series of checks that the control system performs includes all of the following.

(Start the sequences of events (i.e. The selected flow path is prepared for salt flow, pipes and heat exchangers are preheated, valves opened and pumps started.) for the system to operate.)

- Piping in the selected path is preheated to 280°C
- Selected heat exchanger is preheated (to 280°C for the HX or to 565°C for the FX)
- Selected pump sump inlet valve is open

- Selected tank drain valve is open
- Selected return manifold valve is open
- Selected tank return valve is open
- All the other valves are closed
- Non-selected pump is off

Once this has been established, the control system automatically turns on the selected pump and establishes the preset flow rate.

Flow continues until one of three events occurs:

- Either the source tank is declared EMPTY by the source tank level sensor reading
- Or the destination tank is declared FULL by the destination tank level sensor reading.
- Or a system fault is declared

In either of these cases, the two-tank control system will step through the following completion procedures before going to Standby mode and await further instruction from the HMI:

- Define the completion procedure, including:
- Define what to do with the active pump
- Define what to do with the open valves
- Define what to do with the active heat exchangers
- Consider how to handle valve positions and pump states at end of one inner loop pass. Could be recirc loop on pump, could be different loop structure for manual mode vs. automatic operation.

iii. Multiple tank control

This control mode implements the cascade tank arrangement automatically. In this mode, the control system automatically determines which tank to draw salt from and to direct salt to based on sensor feedback located in the tanks.

In this mode, the input is manually entered by the operator via the HMI, and can be one of three things:

- The command to charge (heat addition)
- The command to discharge (heat rejection)
- The command to standby

The Multi-tank control system then selects the two most suitable tanks to act as the cold and hot tanks. Once this determination is made, the information is passed to the two-tank control, and salt flow begins in the manner described previously.

Require smooth transition during charge/discharge.

The control system determines the source and destination tanks based on their levels and temperatures.

In Charge mode,

- The source tank (cold tank) is eligible if:
    - Tank level is not empty (>5%)
    - Tank temperature is not hot (<500C)
- The destination tank (hot tank) is eligible if:
    - Tank level is not full (<90%)
    - Tank temperature is TBD
    - How to deal with the swing tank, which will go from hot to cold

In Discharge mode,

- The source tank (hot tank) is eligible if:
    - Tank level is not empty (>5%)
    - Tank temperature is hot (>500C)
- The destination tank (cold tank) is eligible if:
    - Tank level is not full (<90%)
    - Tank temperature is TBD
    - How to deal with the swing tank, which will go from hot to cold

The control looks at all the tanks in order until it finds a match. If it does not find a match, it will go to “Standby” mode.

The outer loop control system also makes the determination of what the next source tank will be, and what the next destination tank will be. When the two-tank control completes a task, the three-tank control restarts it and feeds it the queued tanks.

The multi-tank control system keeps a charge indicator, in % Charged, which indicates how much energy is stored as heat in the system. This value is expected to be between 0 and 100%. The % charged value is calculated as follows:

Define this formula, %ch = f(LVL, TEMP).

In “Charge” mode, once the % Charged indicator reaches “CHARGED” (95%, adjustable value), the control system returns to “Standby” mode and awaits a command.

In “Discharge” mode, once the % Charged indicator reaches “DISCHARGED” (5%, adjustable value), the control system returns to “Standby” mode and awaits a command.

In “Standby” mode, the pumps are turned off, the heater set points are returned to 280C, and the valve positions are set to their default failsafe positions.

At any point, the operator can place a “Hold” on the ongoing operation, which pauses the charging or discharging process by stopping the pumps. The temperature, air cooling (what does the cooling system do during hold), and valve position set points remain unchanged.

At any point, the operator can “ESTOP” the ongoing operation, which switches the control to ACCESSORIES mode.

f. Flexible for development purpose

The Control software evolves with the operability. Over time as we operate the hardware, change out and bring in new sensors or methods for control, we learn ways to improve the operability. Therefore the control system has to be developed simultaneously with the system and as such, must remain flexible. The demonstration system contains several unqualified and extra sensors. These sensors can represent a significant cost savings if they are shown to work as control elements. The software will need to contain the flexibility necessary to map the characteristics and behavior of these sensors then substitute the sensors on a trial basis. Below is a list of additional or unqualified sensors that need to be maintained until their qualification level is determined.

i. Thermocouple tree in Sumps

The 10 channel thermocouple tree in the sumps is unqualified and intended for development. The belief is that this device can be used to indicate level in the sump. A sharp change in temperature as liquid passes the thermocouple tip will indicate liquid has reached this height along the tree, thereby providing a finite level sensor. This level sensor can be used for general metrics of the system. If qualified it can be used to sense level in the tank or can be used in conjunction with the inlet valve and the pump to provide a batch process flow rate measurement. The output of this would be an array of analog signals.

ii. LSH and LSL in Sumps

The LSL and LSH are float style level sensors. They are unqualified and intended for development. They are adjusted by moving the support rod at the top of the tank. The belief is that these flots can be used to also measure a batch process flow rate by closing the inlet valve, turning on the pump and timing the level drop between the LSH and LSL switches. If this works it would be the least expensive solution to a flow meter. The output of this would be an array of digital signals.

iii. LT in Tanks

The Level transducer in the tank is an unqualified guide wave radar level sensor. This is a primary component and is intended to be the first order trial of level sensing. The output of this would be a COM line signal.

iv. Ultrasonic FM in Sump

The ultrasonic Flow Meter in the sump is an unqualified component. However it is intended to be the first order trial of flow rate sensing. The output of this would be a COM line signal.

g. Graphical User interface

A Graphical User Interface (GUI) or sometimes called Human Machine Interface (HMI) is one of the more important features of the total control system over the short term. Over the long term, as we better understand the behavior of the system, it becomes less important. The GUI or HMI will be the input terminal for all user interface to the main controller. The User Interface may include in its application but is not limited to start stop buttons, status windows, data tables, graphs, file upload interfaces, file download interfaces, diagrams, tabulated pages, and other information organizational features. In addition to the “look and feel” the GUI or HMI shall have the following characteristics.

i. Independence of control

The GUI should be set up in a client server architecture such that the client (the GUI) is independent of the server (main controller). If the client is ever disconnected, the server should continue to run unobstructed. The GUI should then be able to re-connect to the controller to check status without obstruction. Future version of the client may provide access control to limit access on an as need basis.

ii. Initiate Start and Stop

The client will be the main terminal from which to initiate main controller commands. To start the system a user must first access the main controller through the client and execute the start command. The main controller will continue to run until it determines that it has reached the terminus of its cycle, it encounters an error, in which case it executes a pre-determined fault condition, or it is manually stopped through the client. All user interface or access to the main controller shall be done through the client.

iii. Test monitoring

One feature of the HMI is test monitoring. At the time of this document it is unclear as to exactly what test variables need to be monitored. The determination of this is through the control system development process discussed as the basis for required flexibility. The test monitoring feature shall be set up in a way that enables the user to select the variables to be monitored. For example a user might like to observe the history of a data trace over time. In this case the test monitoring feature shall have a Pull Down to enable the selection of which data set to monitor. The test monitoring system should allow for the buffering of at least 1 days’ worth of data.

iv. Data collection

Data collection is another important feature of the overall control system in the short term and becomes less important as time goes on. Data collection enables development through continued testing. For the MCTES control system, data is to be collected throughout the period of a "test". Tests can last for weeks or months at a time. Interruption of test data is not desirable but acceptable, as long as interruption periods are short. If an interruption occurs, the test data collection sub-system must have a way to resume data collection manually and automatically. In addition, there must be a way to verify that data is being collected, for example observing the file size grow. It's possible the master control system may not contain a data storage space large enough to support several months' worth of data. Therefore test data collection can be accomplished in several other ways. The user interface GUI can provide test data collection as long as it has a way to reconnect in the event of a connection drop to continue data collection. An alternate method may be to implement a separate data collection client designed specifically for the purpose of data collection. This client could meet all the requirements and not interfere with the User Interface Client.

h. Communication Watchdog

As part of the interconnectivity between master and nodes, the COM line is a critical part of the infrastructure. The control system should be designed in such a way that ensures a very stable and reliable COM network. There should be no unnecessary components that could be responsible for creating a network fault, for example an unprotected Ethernet hub. An Ethernet hub that could be easily or unknowingly disconnected or powered down. A network as part of a shared public network. Excess traffic may prevent timely transfer of data and a non-private network creates vulnerabilities to hacking. As part of network stability it is also required that each node of the network monitor connectivity to the master and the master monitor connectivity to each node. This type of monitoring is called a Communication Watchdog. If the watchdog senses a "down" COM line or network, the affected nodes and or master will respond by entering into a "Network Fault" state which is to be defined in the development process. Essentially the nodes and master will enter into a safe state, shut off flows and wait for the network to come back.

i. Reliability

Hardware and software reliability shall be defined such that only two or fewer unintended shutdowns are permitted per calendar year.

CONTROL MODES

Three control modes are defined to offer flexibility in the operation of the system. The three modes are Manual (CMODE = 1), Two-Tank (CMODE = 2), and Three-Tank (CMODE = 3) control.

SYSTEM STARTUP AND OPERATING STATES

Three different states are defined for system startup and normal operation, as well as for handling system faults or operator commands. These operating states are independent from

the control modes defined previously, as they pertain solely to the startup and idling of the system. The three different states are

- OFF
- ACCESSORIES
- STANDBY

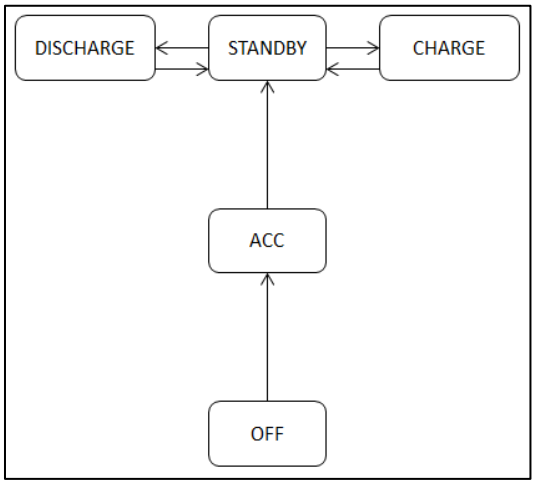

Shows the different operating states.

a. OFF MODE

In OFF mode, power to the controllers is off.

b. ACCESSORIES MODE

In ACCESSORIES mode, power to all the controllers and VFD's is turned on. The main contactor that enables current flow to electric heaters is off. The contactor that enables current flow to all electric motors is off.

c. STANDBY MODE

In STANDBY mode, the main contactors for heater power and for pump power are turned on. The pump RPM set points are set to 0, the temperature set points for all the heaters are set to 280˚C, the HX air cooling is enabled, and the valve position set points are set to nominal / failsafe. If temperatures are low, an amber light is turned on. In STANDBY mode the CMODE can be changed to 1 (Manual), 2 (Two-Tank), or 3 (Three-Tank).

ACTION OF FAULTS AND STOPS

Define the different stops and holds –

- ESTOP – kill the pump, valves to failsafe. (Define failsafe), Heat exchangers to failsafe (define failsafe). Heaters to failsafe (define failsafe).

- FULLY CHARGED – (STORE, STANDBY) – valves to FS, pumps do the thing where they keep pumping for a little bit while they drain the sump so we don't freeze salt in the plumbing, HX /FX go to idle
- FULLY DISCHARGED – same as charged, HX fan off, HX heaters to 290C. Combine w/ the CHARGED hold.
- HOLD – kill the pumps, valves remain in their current positions, heat exchangers remain at their current set points

Multiple standard control loops are required to control the system. These loops are listed here and described in further detail in this section.

- Two (2) pump loops (CP and HP)
- Ten (10) valve actuation loops (V1 – V10)
- One (1) heat exchanger air flow control loop (HX)
- Thirty-five (35) temperature control loops, including three (3) tank internal temperatures (TK1 – TK3), two (2) heat exchanger temperatures (FX and HX), and thirty (30) zones of heat trace (TR1 – TR30)

a. VALVE POSITION CONTROL LOOPS

The valve position control loop sets the position of a valve to either open or closed. It is used to direct the flow of salt to the desired components of the system. The loop is a feedback control loop which uses an air-powered linear actuator to operate a gate valve, and feedback from limit switches to confirm the fully open or fully closed position has been reached.

b. HEAT EXCHANGER AIR FLOW CONTROL LOOP

Heat is removed from the system at a rate of 75 kW using air cooling on a finned tube section of piping. The HX air flow control loop is used to control the salt temperature coming out of the heat exchanger. It is a feedback control loop which uses a VFD to control the speed of a cooling fan and feedback from a thermocouple located at the HX salt outlet.

In addition, there is a cooling air bypass loop which deflects the cooling air around the heat exchanger. The bypass consists of a rotary actuator which spins a butterfly valve in the air bypass stream, and feedback from the same thermocouple located at the HX salt outlet. The target salt exit temperature is 290˚C (adjustable). Refer to HX start-up procedures.