Energy Research and Development Division
INTERIM/FINAL PROJECT REPORT

DAVIS FUTURE RENEWABLE ENERGY AND EFFICIENCY

Appendix E-1

Prepared for: California Energy Commission
Prepared by: Valley Climate Action Center on behalf of the City of Davis, CA

JULY 2015
CEC-500-2016-015-AP-E1

Solar Thermal Deployment Plan

Task 7 - DavisFREE

SOLAR THERMAL DESIGN AND INSTALLATION

- Types of Solar Thermal Systems?
- Design Parameters
- Installation Techniques
- What are the Targets Markets?

Jonathan Gemma, *Vice President of Sales & Marketing*
jonathan@aztecsolar.com

Solar Thermal Design and Installation

Task 7 - DavisFREE

TYPES OF SOLAR THERMAL SYSTEMS

Water Heating Systems

Direct

Passive

Indirect

Active

NC CLEAN ENERGY TECHNOLOGY CENTER

Formerly the NC Solar Center

TYPES OF SOLAR THERMAL SYSTEMS

Major System Components

- Active System
  - Collector(s)
  - Storage tank
  - Controller
  - Pump or Circulator
- Passive System
  - Collector(s)
  - Storage tank

Solar Thermal Design and Installation

Task 7 - DavisFREE

TYPES OF SOLAR THERMAL SYSTEMS

ACTIVE SYSTEMS

CLOSED LOOP-GLYCOL

- **SOLARAY**

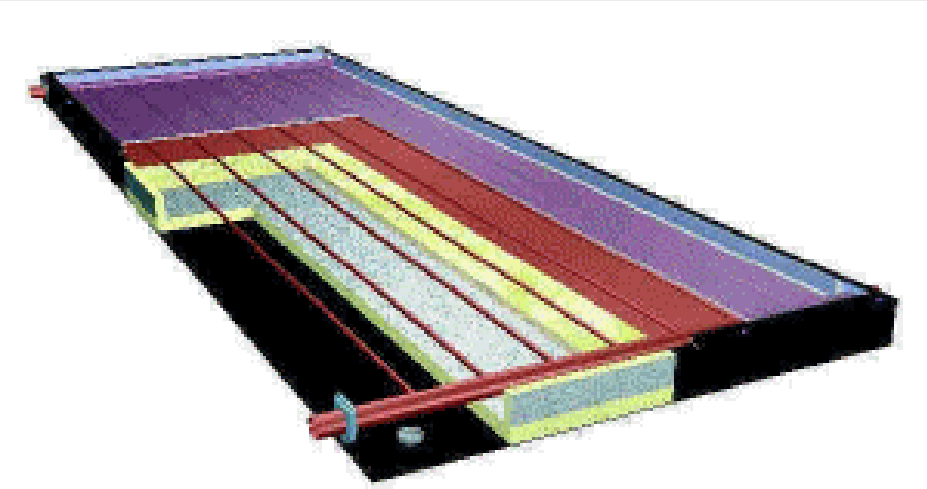

Benefits

- High thermal performance
- Freeze protection to –60 F
- Lightweight low roof profile

Disadvantages

- Some active components
- Overheating-thermal break-down of glycol

Solar Thermal Design and Installation

Task 7 - DavisFREE

TYPES OF SOLAR THERMAL SYSTEMS

SunEarth Inc
Quality Solar Energy Products

Plumbing & Instrumentation Diagram

SR-G101
09/15/2005

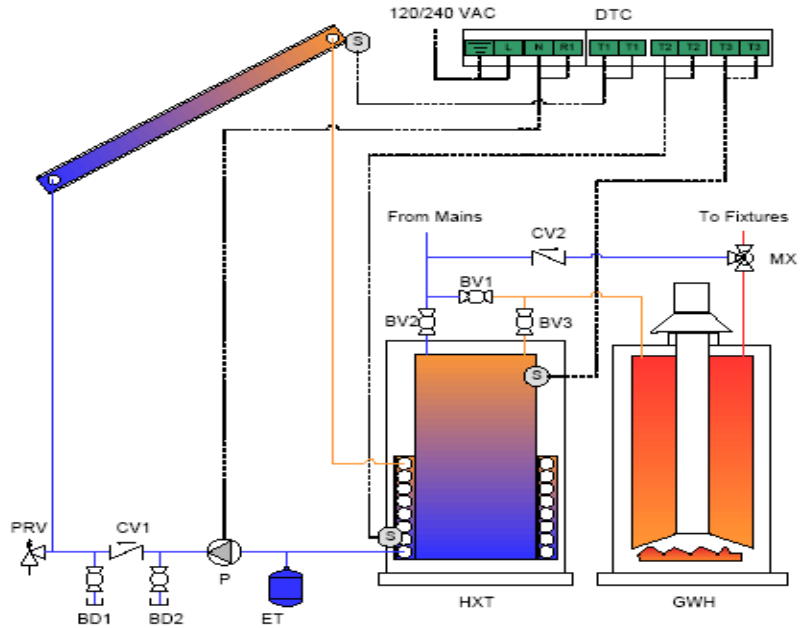

PART	DESCRIPTION
BD	Boiler Drain
BV	Full Port Ball Valve (¾" Minimum)
CV	Check Valve
DTC	Steca TR0301 Differential Controller
ET	Expansion Tank
GWH	Gas Water Heater
MX	Mixing Valve
P	Centrifugal Pump
PRV	Pressure Relief Valve
HXT	Ruud/Rheem Heat Exchange Tank
S	1000 Ω RTD Temperature Sensor
TPR	Temperature Pressure Relief Valve

Solar Enabled	
Valve	Status
BV1	Closed
BV2	Open
BV3	Open

Solar Bypassed	
Valve	Status
BV1	Open
BV2	Closed
BV3	Closed

Disclaimer

This is a conceptual drawing for guidance only. It is up to the designer and installer of the system to ensure that the actual installation is in conformance will all local codes.

System Description

SolaRay Closed Loop Glycol With Gas Backup

SunEarth Inc. 8425 Almeria Avenue, Fontana, CA 92335
Phone: 909-434-3100 Fax: 909-434-3101 www.sunearthinc.com

Solar Thermal Design and Installation

Task 7 - DavisFREE

TYPES OF SOLAR THERMAL SYSTEMS

Solar Thermal Design and Installation

Task 7 - DavisFREE

TYPES OF SOLAR THERMAL SYSTEMS

ACTIVE SYSTEMS

CLOSED LOOP-DRAINBACK

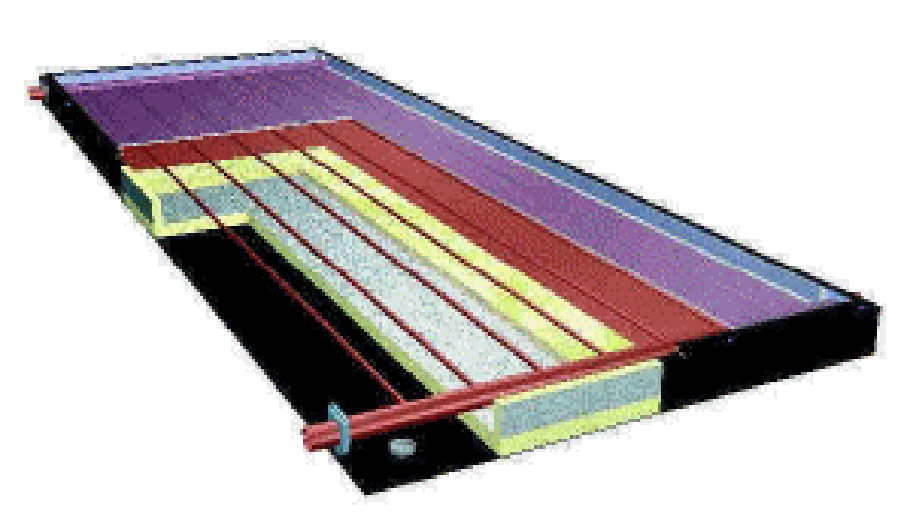

Benefits

- High thermal performance
- Freeze and over heat protection
- No Glycol or Double wall HX needed
- Lightweight low roof profile

Disadvantages

- Some active components
- Relatively Large Pumps
- Noise and thermal shock

Solar Thermal Design and Installation

Task 7 - DavisFREE

TYPES OF SOLAR THERMAL SYSTEMS

CASCADE DRAINBACK

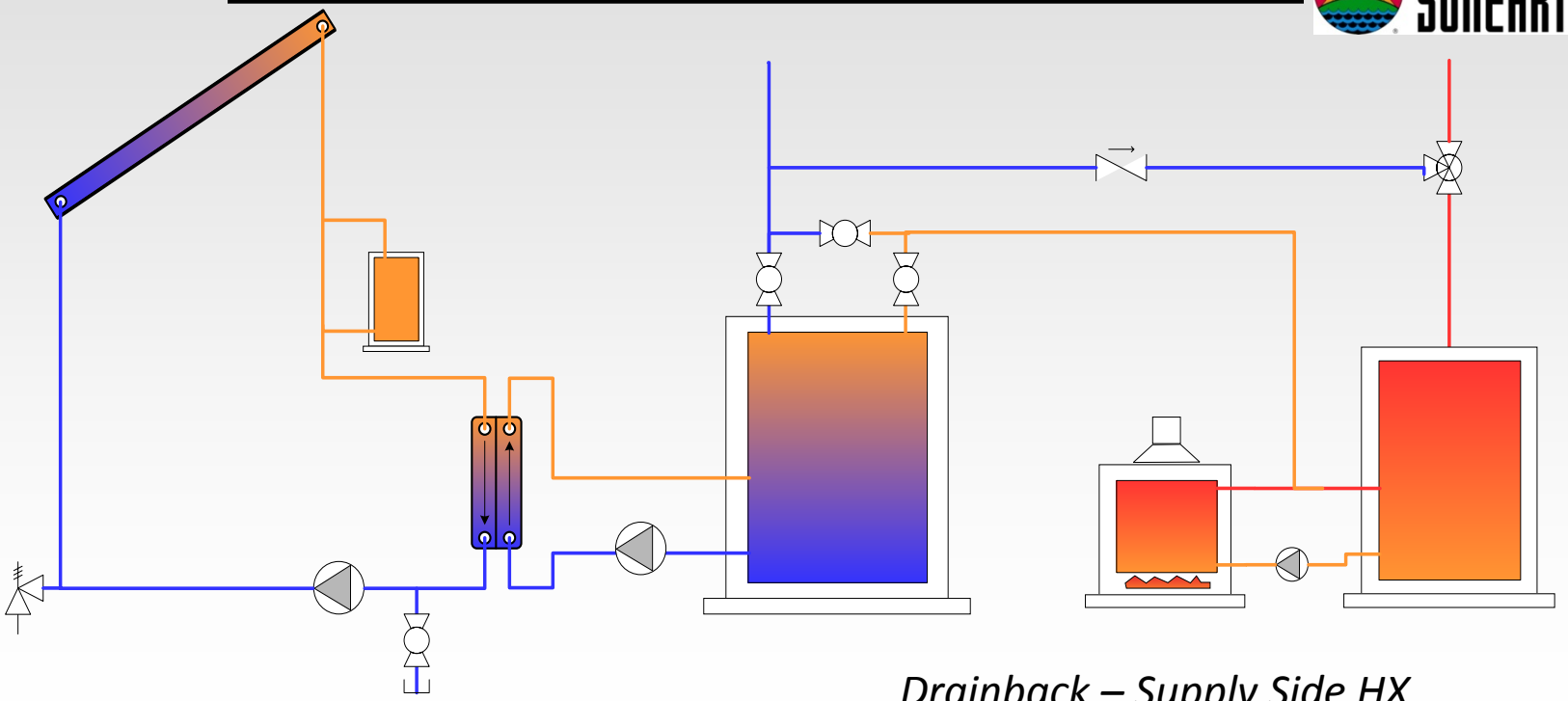

Drainback – Load Side HX

Drainback – Supply Side HX

Solar Thermal Design and Installation

Task 7 - DavisFREE

TYPES OF SOLAR THERMAL SYSTEMS

Solar Thermal Design and Installation

Task 7 - DavisFREE

TYPES OF SOLAR THERMAL SYSTEMS

PASSIVE SYSTEMS

INTEGRAL COLLECTOR STORAGE (ICS)

- **COPPER HEART**

(CP40)

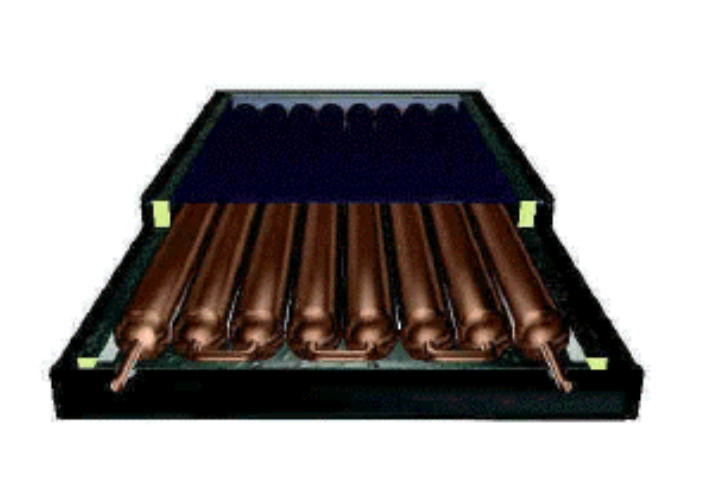

Benefits
- Simple installation
- No moving parts
- Inherent overheat protection
- Moderate freeze protection

Disadvantages
- Sensitive to ambient temperatures

Solar Thermal Design and Installation

Task 7 - DavisFREE

TYPES OF SOLAR THERMAL SYSTEMS

SunEarth Inc. Quality Solar Energy Products

Plumbing & Instrumentation Diagram

CP-G101
09/14/2005

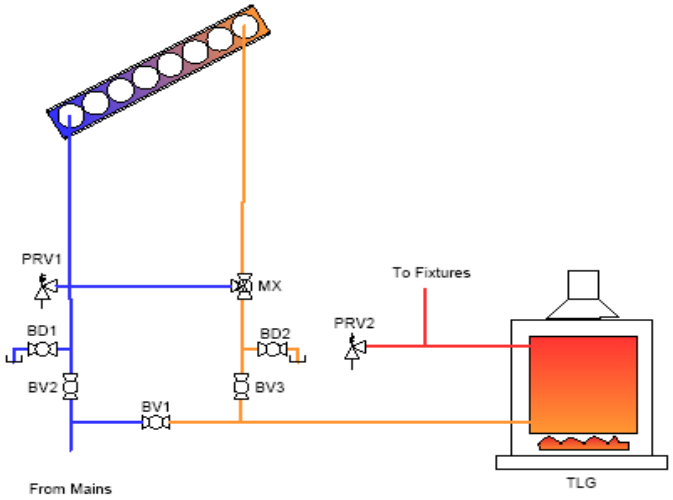

PART	DESCRIPTION
BD	Boiler Drain
BV	Full Port Ball Valve (¾" Minimum)
MX	Mixing Valve
PRV	Pressure Relief Valve
TLG	Tankless Gas Water Heater

Solar Enabled	
Valve	Status
BV1	Closed
BV2	Open
BV3	Open

Solar Bypassed	
Valve	Status
BV1	Open
BV2	Closed
BV3	Closed

SunEarth Inc.

Disclaimer

This is a conceptual drawing for guidance only. It is up to the designer and installer of the system to ensure that the actual installation is in conformance will all local codes.

System Description

COPPERHEART WITH TANKLESS GAS WATER HEATER

SunEarth Inc. 8425 Almeria Avenue, Fontana, CA 92335
Phone: 909-434-3100 Fax: 909-434-3101 www.sunearthinc.com

Solar Thermal Design and Installation

Task 7 - DavisFREE

TYPES OF SOLAR THERMAL SYSTEMS

EXAMPLES OF

COPPERHEART

INSTALLATIONS

SunEarth Inc.

Solar Thermal Design and Installation

Task 7 - DavisFREE

TYPES OF SOLAR THERMAL SYSTEMS

PASSIVE SYSTEMS

THERMOSIPHON SYSTEMS

- **SUNSIPHON**

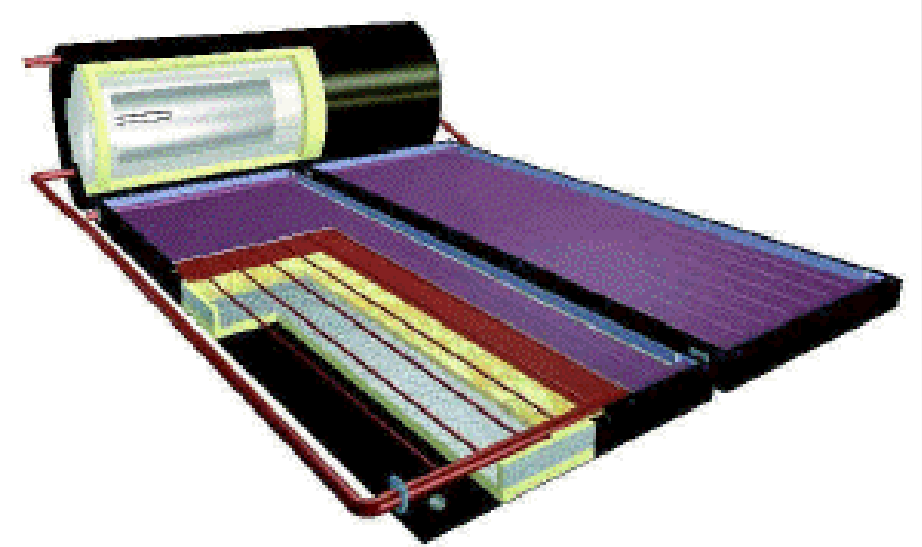

Benefits

- High thermal performance
- Not sensitive to ambient temp
- No moving parts
- Fully freeze protected

Disadvantages

- Can't you get that tank off my roof!

Solar Thermal Design and Installation

Task 7 - DavisFREE

TYPES OF SOLAR THERMAL SYSTEMS

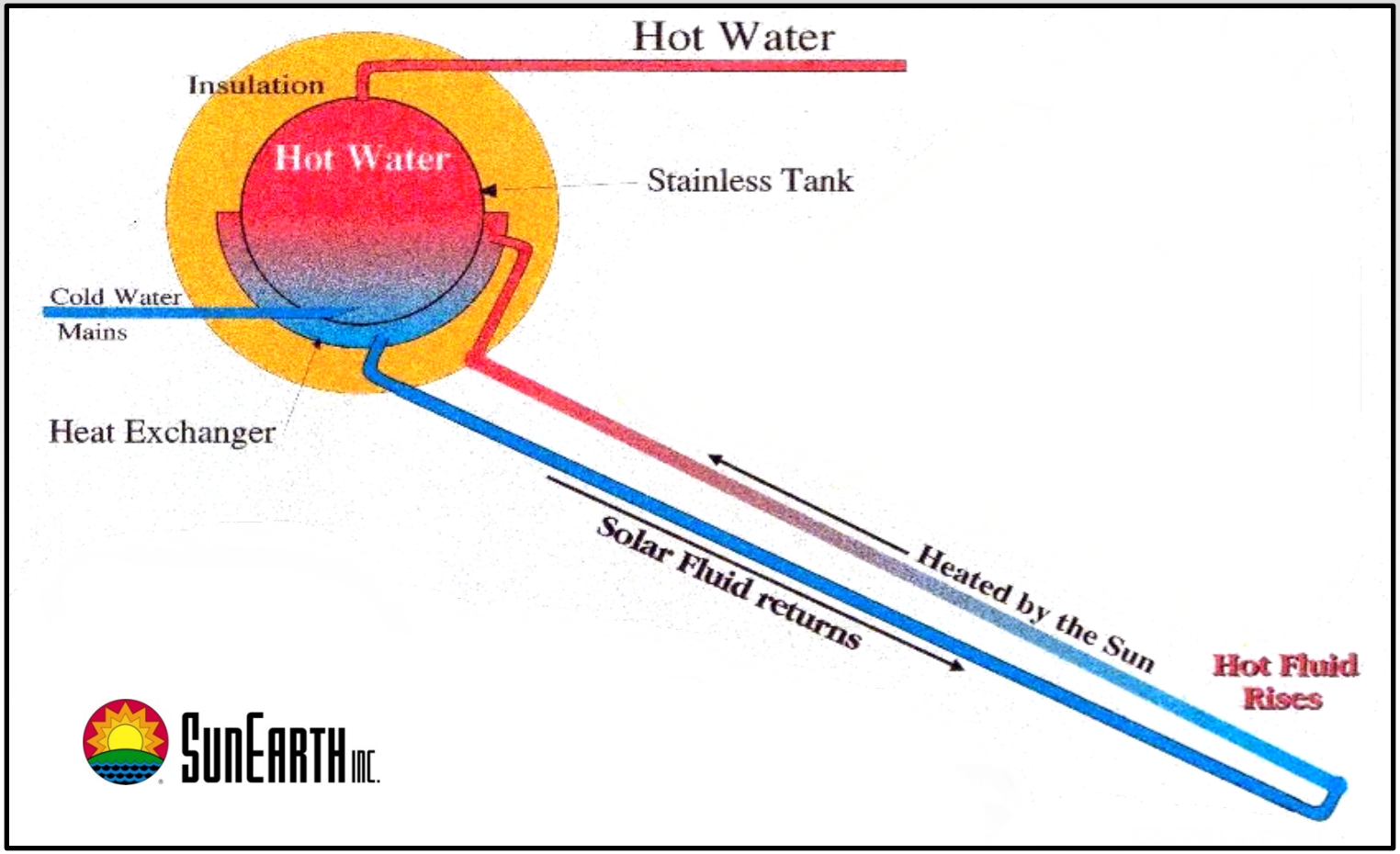

Solar Thermal Design and Installation

Task 7 - DavisFREE

TYPES OF SOLAR THERMAL SYSTEMS

	Plumbing & Controls Diagram	100905-07 09/14/2005

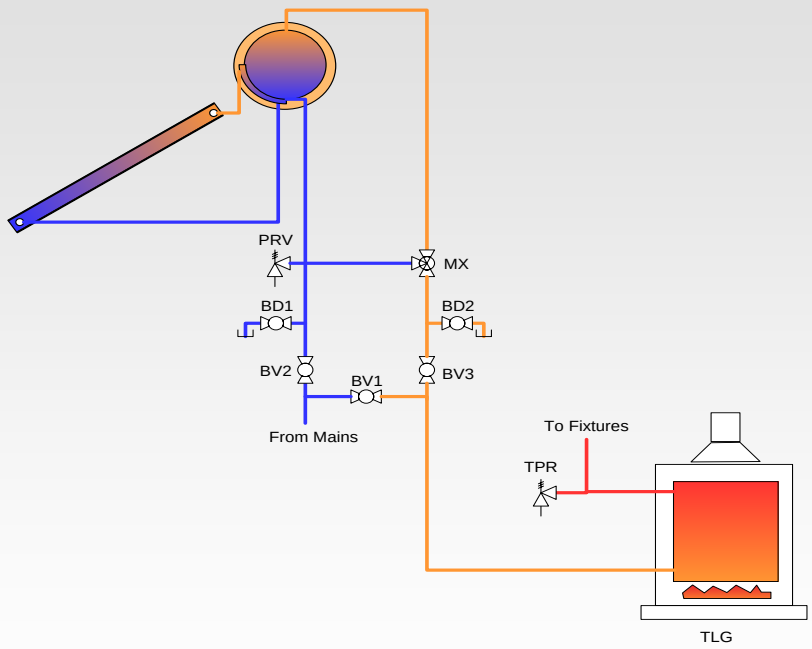

PART	DESCRIPTION
BD	Boiler Drain
BV	Full Port Ball Valve (¾" Minimum)
TLG	Tankless Gas Water Heater
MX	Mixing Valve
PRV	Pressure Relief Valve
TPR	Temperature Pressure Relief Valve

SunEarth Inc.

Disclaimer

This is a conceptual drawing to show basic system operation only. It is not intended to include all devices and details necessary for proper orientation. It is the responsibility of the installing contractor to ensure that all necessary details and devices are installed to guarantee proper operation and compliance with local building codes.

System Description

Thermosiphon – Tankless Gas

Kineo Design Group, LLC – 930 Dwight Way, Suite 7, Berkeley, CA 94710
Phone: 510-459-7970 Fax: 510-644-3544 www.kineodesign.com

Solar Thermal Design and Installation

Task 7 - DavisFREE

TYPES OF SOLAR THERMAL SYSTEMS

THERMOSIPHON INSTALLATIONS

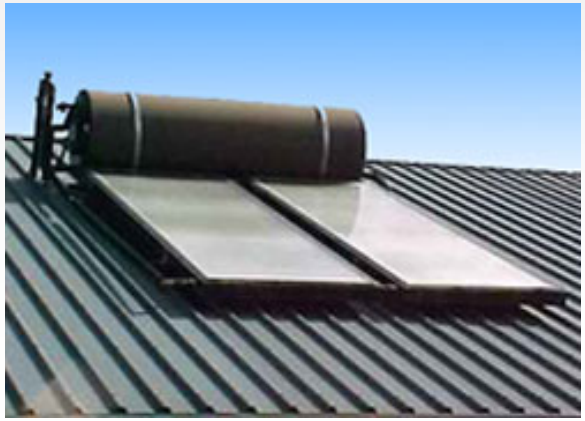

SunEarth Inc.

Solar Thermal Design and Installation

Task 7 - DavisFREE

TYPES OF SOLAR THERMAL SYSTEMS

Solar Hot Water System Types

- Direct

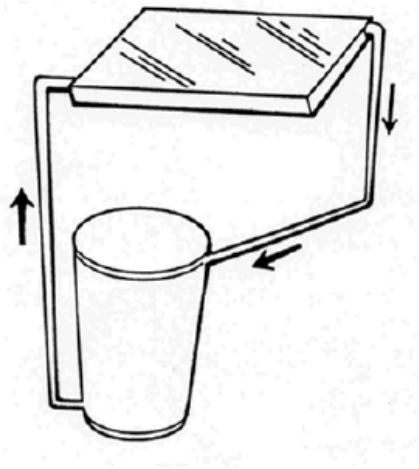

- Indirect

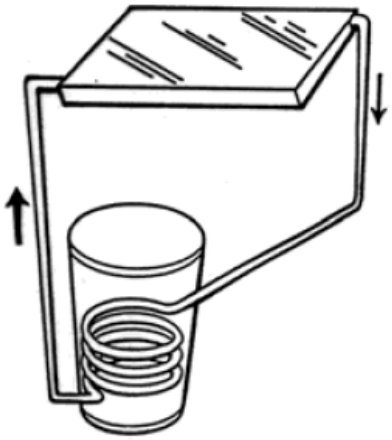

NC CLEAN ENERGY TECHNOLOGY CENTER

Formerly the NC Solar Center

TYPES OF SOLAR THERMAL SYSTEMS

System Types

- **Direct**
  - City or potable water is circulated from the tank to the collector and back
- **Indirect**
  - Fluid circulating through the collector never comes in contact with the city or potable water in the storage tank
  - A heat exchanger is used to transfer heat from the circulating fluid to the potable water

NC CLEAN ENERGY TECHNOLOGY CENTER
Formerly the NC Solar Center

TYPES OF SOLAR THERMAL SYSTEMS

Direct System

- Circulates water from tank to collector
- Water heated by collector and returned to tank
  - Stratification of warm water in tank
- Differential controller regulates pump operation
- Valves
- FREEZE PROTECTION (may be required)
  - Freeze valve/manual DRAINDOWN

Solar Thermal Design and Installation

Task 7 - DavisFREE

TYPES OF SOLAR THERMAL SYSTEMS

Direct System

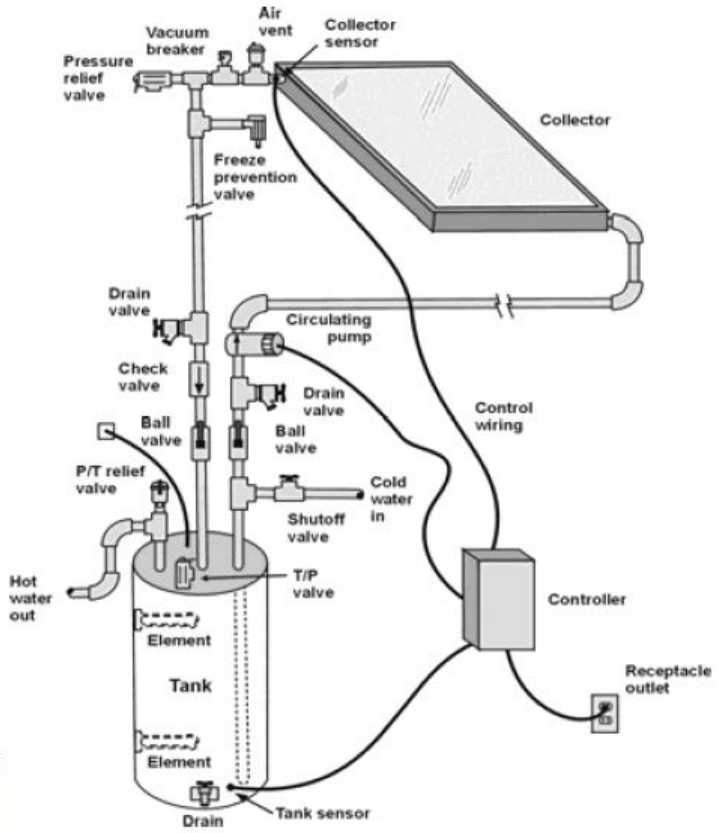

NC CLEAN ENERGY TECHNOLOGY CENTER

Formerly the NC Solar Center

Solar Thermal Design and Installation

Task 7 - DavisFREE

TYPES OF SOLAR THERMAL SYSTEMS

Indirect System

- Non-potable fluid (usually glycol) circulates through collector and heat exchanger
- Freeze protection
- Reduced Scale

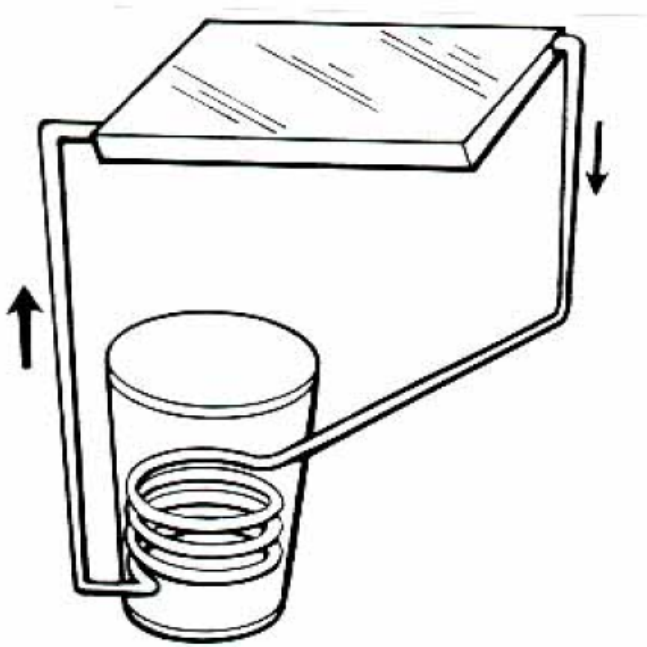

NC CLEAN ENERGY TECHNOLOGY CENTER

Formerly the NC Solar Center

Solar Thermal Design and Installation

Task 7 - DavisFREE

TYPES OF SOLAR THERMAL SYSTEMS

Two Types of Indirect Systems

Difference Is Collector Loop

- Circulating Glycol – Pressurized
  Heat Transfer Fluid is Antifreeze Solution
- Drainback – Not Pressurized,
  Heat Transfer Fluid is Water or Glycol mix

NC CLEAN ENERGY TECHNOLOGY CENTER
Formerly the NC Solar Center

Solar Thermal Design and Installation

Task 7 - DavisFREE

TYPES OF SOLAR THERMAL SYSTEMS

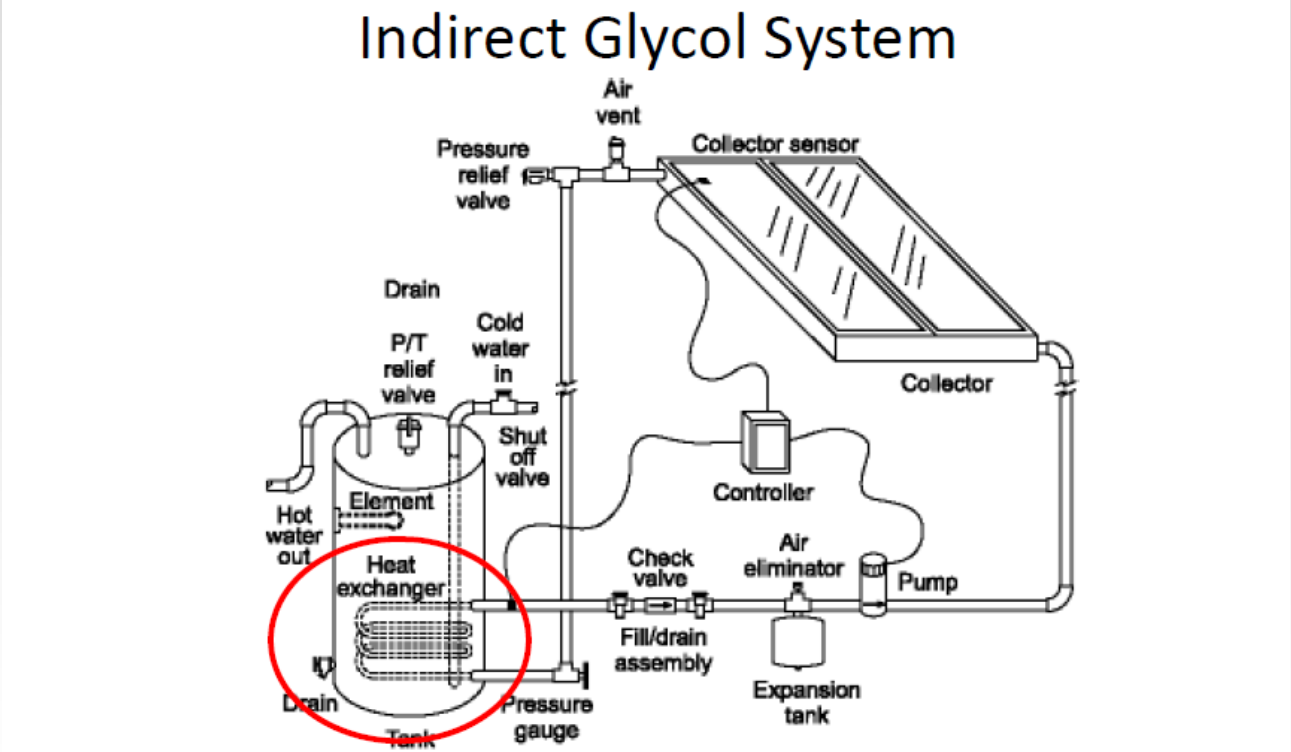

NC CLEAN ENERGY TECHNOLOGY CENTER

Formerly the NC Solar Center

Solar Thermal Design and Installation

Task 7 - DavisFREE

TYPES OF SOLAR THERMAL SYSTEMS

ICS
Integral Collector Storage

- Passive Direct system
- Collector and tank combined
- Pre-heater
- Simple, no moving parts
- Lifestyle adjustment

NC CLEAN ENERGY TECHNOLOGY CENTER
Formerly the NC Solar Center

Solar Thermal Design and Installation

Task 7 - DavisFREE

TYPES OF SOLAR THERMAL SYSTEMS

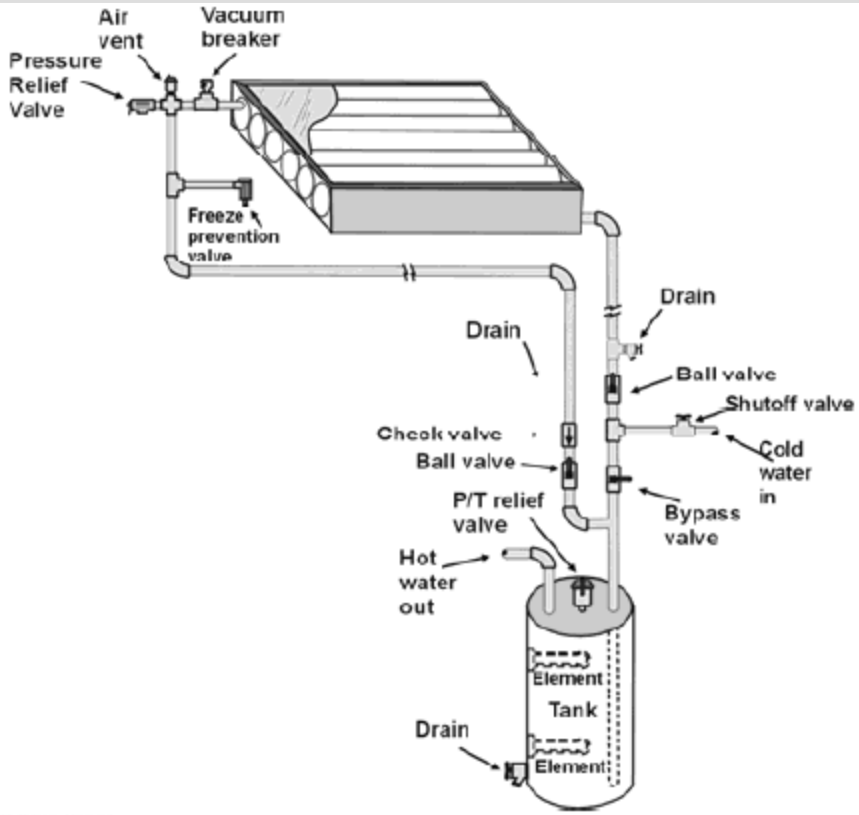

NC CLEAN ENERGY TECHNOLOGY CENTER

Formerly the NC Solar Center

Solar Thermal Design and Installation

Task 7 - DavisFREE

TYPES OF SOLAR THERMAL SYSTEMS

Passive System

NC CLEAN ENERGY TECHNOLOGY CENTER

Formerly the NC Solar Center

Solar Thermal Design and Installation

Task 7 - DavisFREE

TYPES OF SOLAR THERMAL SYSTEMS

Passive System

NC CLEAN ENERGY
TECHNOLOGY CENTER

Solar Thermal Design and Installation

Task 7 - DavisFREE

Design Parameters

Typical Consumption or Demand

- Residential
  - 20-gallons per day for first two people then 15-gallons for each additional person

  - Family of one or two = 50-gallon system
  - Family of four = 80-gallon system
  - Family of six or more – 120-gallon system

NC CLEAN ENERGY TECHNOLOGY CENTER

Formerly the NC Solar Center

Solar Thermal Design and Installation

Task 7 - DavisFREE

Design Parameters

Typical Consumption or Demand

- Commercial
  - Restaurant 2.4 gallons per meal
  - Fast food = .79-gallon/meal
  - Office Building = 1 gallon/person/day
  - Laundry each machine = 45/gpd
  - Hospital = 52-gallons per bed/day
  - Hotel
    - Business Hotel = 14/gpd
    - Resort Hotel = 20/gpd

NC CLEAN ENERGY TECHNOLOGY CENTER

Formerly the NC Solar Center

Solar Thermal Design and Installation

Task 7 - DavisFREE

Design Parameters

Annual performance is the important element in the design.

Typical 50-80% Annual hot water load

Depends on climate

Performance
Sized for July not December

	Solar Fraction	Delivered MMBtu
Jan	0.389	2.039
Feb	0.524	2.474
Mar	0.615	3.190
Apr	0.746	3.720
May	0.851	4.351
Jun	0.919	4.518
Jul	0.935	4.737
Aug	0.904	4.586
Sep	0.805	3.973
Oct	0.666	3.419
Nov	0.397	1.990
Dec	0.284	1.483
Year	**0.668**	**40.486**

NC CLEAN ENERGY TECHNOLOGY CENTER
Formerly the NC Solar Center

Installation Practices

How do they Mount on the Roof?

and stay there!

Flush Mount – Pitched Roofs

Tilt Mount – Flat Roof

SunEarth Inc.

Solar Thermal Design and Installation

Task 7 - DavisFREE

Installation Practices

Flush Mount Components

SunEarth Inc.

Solar Thermal Design and Installation

Task 7 - DavisFREE

Installation Practices

Flush Mount – Foot Attachment

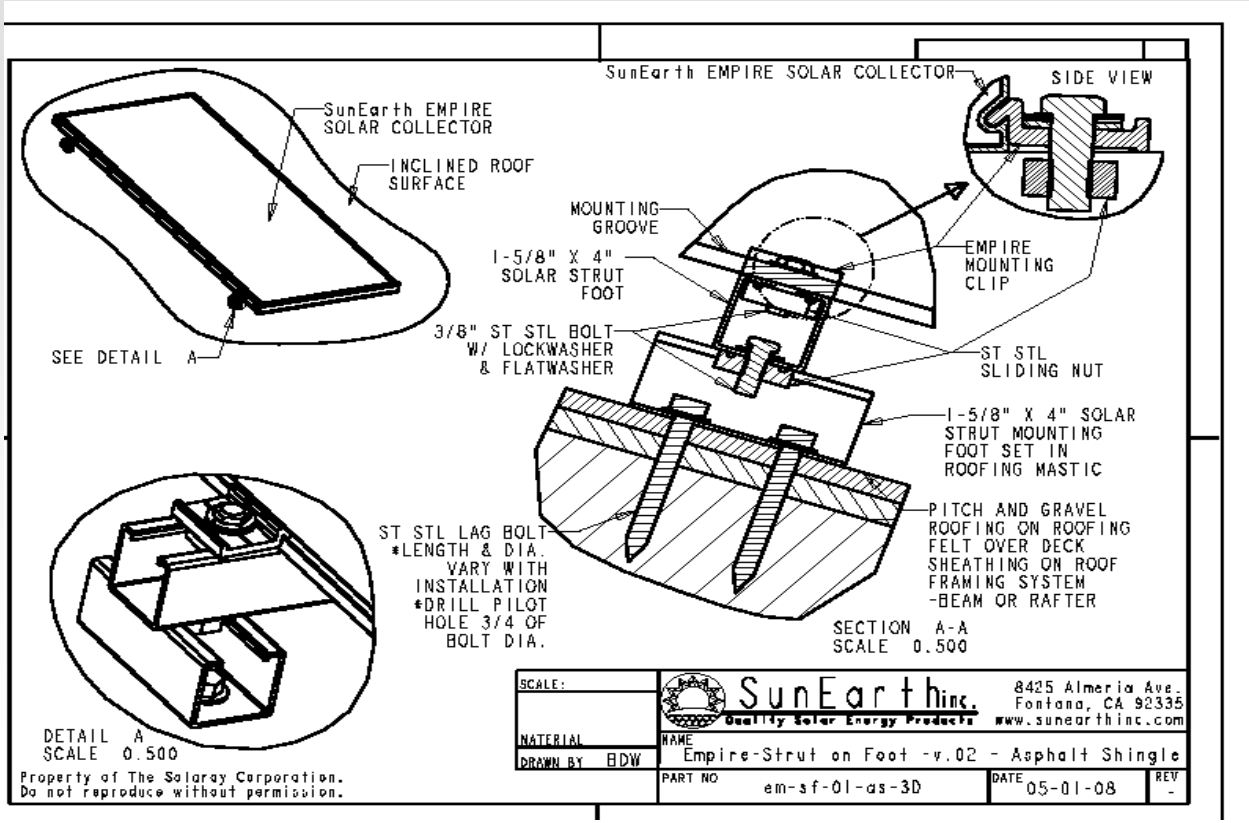

Solar Thermal Design and Installation

Task 7 - DavisFREE

Installation Practices

Flush Mount – Hangar Bolt Attachment

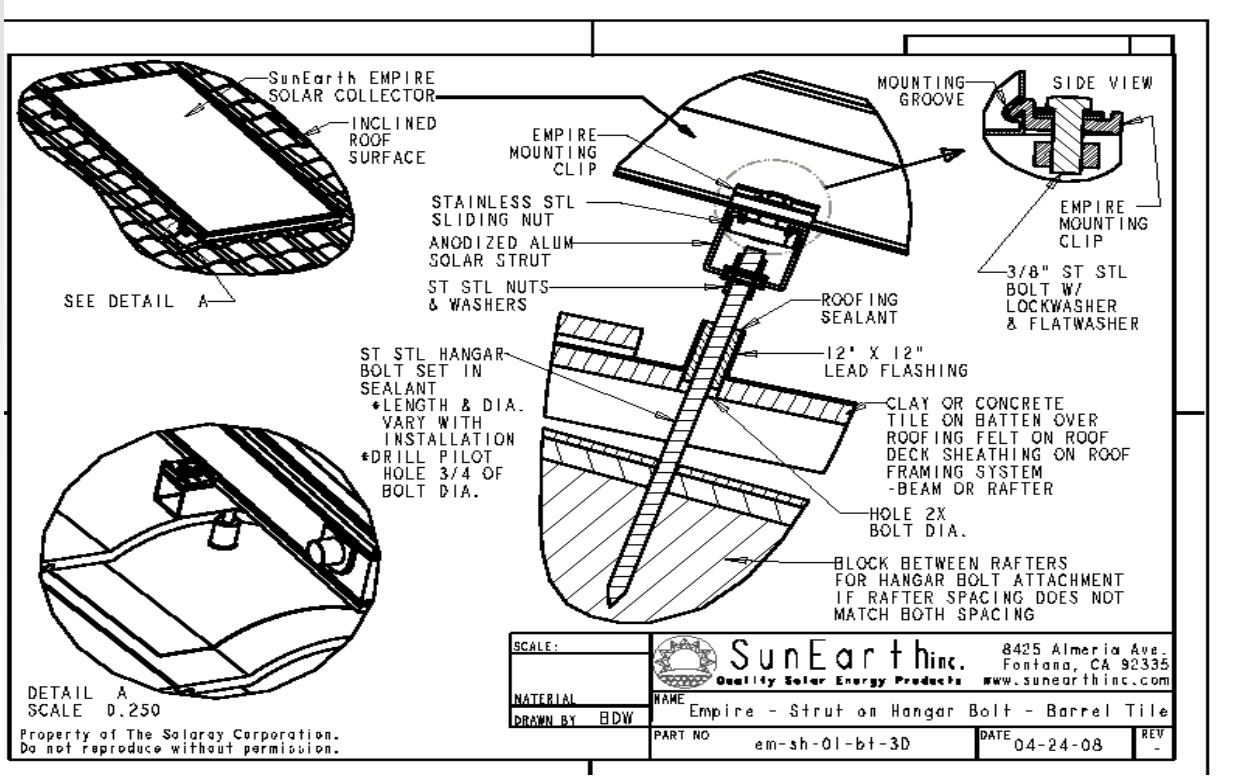

Solar Thermal Design and Installation

Task 7 - DavisFREE

Installation Practices

Solar Thermal Design and Installation

Task 7 - DavisFREE

Installation Practices

Landscape Rack

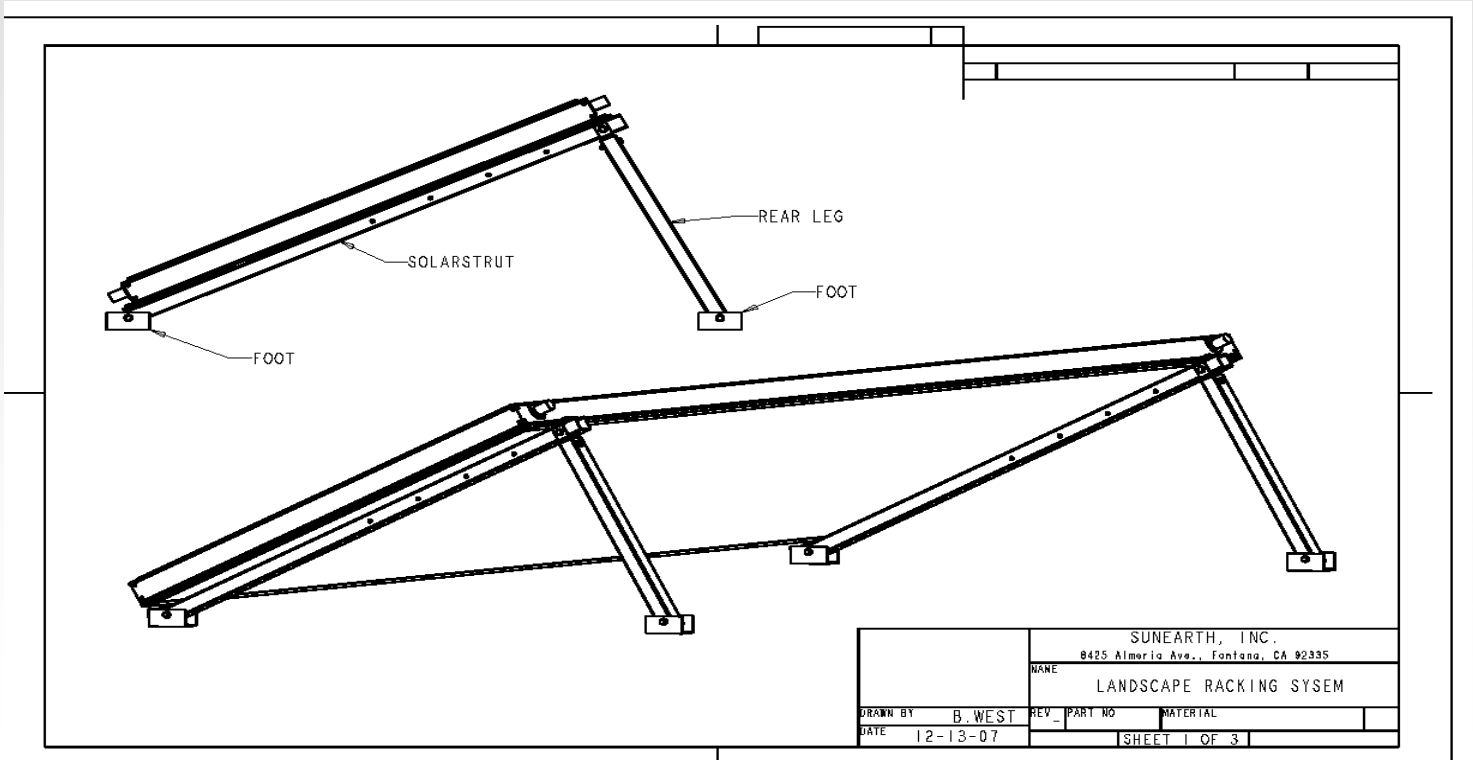

Solar Thermal Design and Installation

Task 7 - DavisFREE

Installation Practices

Solar Thermal Design and Installation

Task 7 - DavisFREE

Installation Practices

Solar Thermal Design and Installation

Task 7 - DavisFREE

Installation Practices

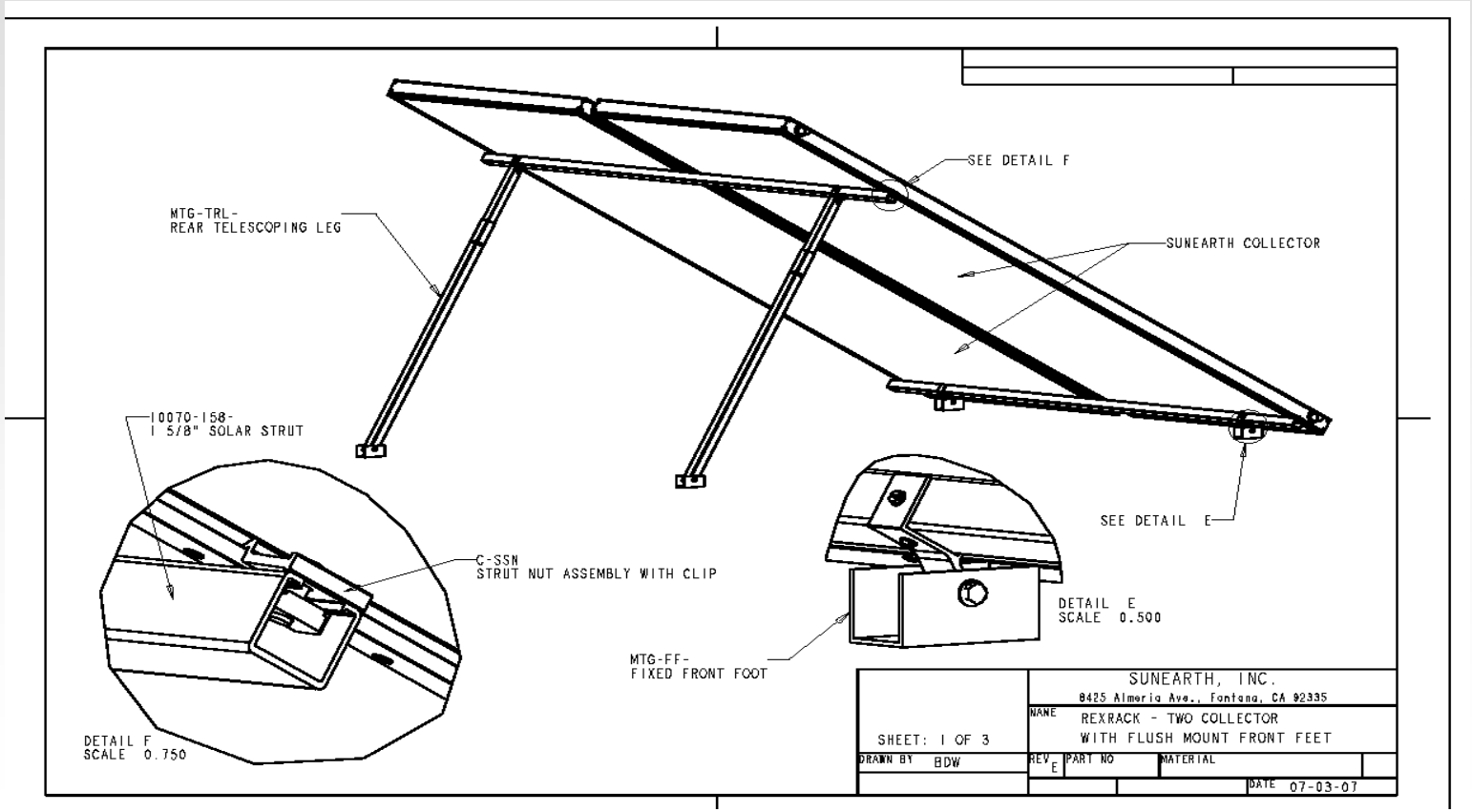

Solar Thermal Design and Installation

Task 7 - DavisFREE

Installation Practices

Rex Rack – Commercial Tilt Mount

Solar Thermal Design and Installation

Task 7 - DavisFREE

Installation Practices

EZ Mount Stand-Offs

Solar Thermal Design and Installation

Task 7 - DavisFREE

Installation Practices

QuickMount Lag Bolt with Flashing

Solar Thermal Design and Installation

Task 7 - DavisFREE

Installation Practices

Controllers

Solar Thermal Design and Installation

Task 7 - DavisFREE

Installation Practices

Solar Tanks

- 80 & 120 Gallon Heat Exchange Tanks
- 80 & 120 Gallon Top Conect Solar Storage Tanks

Solar Thermal Design and Installation

Task 7 - DavisFREE

Installation Practices

DrainBack Tanks

Stainless Steel

CopperStore

Solar Thermal Design and Installation

Task 7 - DavisFREE

Installation Practices

Expansion Tanks

2.5 & 5 Gallon

Expansion Tanks

Solar Thermal Design and Installation

Task 7 - DavisFREE

Installation Practices

Solar Thermal Design and Installation

Task 7 - DavisFREE

Installation Practices

Grunfos Pumps

Solar Thermal Design and Installation

Task 7 - DavisFREE

Installation Practices

Pipe Insulation

Solar Thermal Design and Installation

Task 7 - DavisFREE

Installation Practices

Solar Charge Pump

Solar Thermal Design and Installation

Task 7 - DavisFREE

Installation Practices

Other Components

Sensor Wire

Mixing Valves

Copper Pipe

Line Sets

Solar Thermal Design and Installation

Task 7 - DavisFREE

Installation Practices

Solar Thermal Deployment Plan

Task 7 - DavisFREE

Solar Thermal Target Market

Commercial Pools	Universities	Multi-Family	Hotels	Single Family Homes
17	25	10.6	4.6	0.615

Average Metric Tons of CO^2 Saved per Year

Coin-op Laundries • Low Income • HOA's • Fitness Centers

AZTEC SOLAR INC

Pool Heating ⁂ Water Heating ⁂ Solar Electric

www.AztecSolar.com

11370 Trade Center Drive, Ste 3
Rancho Cordova, CA 95742

THANK YOU!