Energy Research and Development Division
FINAL PROJECT REPORT

DEMONSTRATION OF FULL-SCALE BBADS BIOMASS DENSIFICATION SYSTEM

Prepared for: California Energy Commission
Prepared by: Altex Technologies Corporation

MARCH 2015
CEC-500-2016-031

PREPARED BY*:*

Primary Author(s):
John Kelly
Nehru Chevanan
George Miller
Chad Olivieri

Altex Technologies Corporation
244 Sobrante Way
Sunnyvale, CA 94086
408-328-8322
www.altextech.com

Contract Number: PIR-11-021

Prepared for:

California Energy Commission

Michael Lozano
Contract Manager

Virginia Lew
Office Manager
Energy Efficiency Research Office

Laurie ten Hope
Deputy Director
ENERGY RESEARCH AND DEVELOPMENT DIVISION

Robert P. Oglesby
Executive Director

DISCLAIMER

This report was prepared as the result of work sponsored by the California Energy Commission. It does not necessarily represent the views of the Energy Commission, its employees or the State of California. The Energy Commission, the State of California, its employees, contractors and subcontractors make no warrant, express or implied, and assume no legal liability for the information in this report; nor does any party represent that the uses of this information will not infringe upon privately owned rights. This report has not been approved or disapproved by the California Energy Commission nor has the California Energy Commission passed upon the accuracy or adequacy of the information in this report.

ACKNOWLEDGEMENTS

The authors thank the California Energy Commission for sponsoring this project to demonstrate the BBADS biomass densification technology under the 2011 Emerging Technology Demonstration Grant (ETDG II). Also, thanks are due to Mike Lozano, the California Energy Commission Project Manager, for his support, guidance, and review of all the progress reports submitted throughout the project period. Special thanks are due to Dr. Dan Putnam of UC Davis who worked to provide the test site and raw material needed for testing and demonstration of the full-scale BBADS system at UC Davis. Without his support, a successful system demonstration would not have been possible. In addition, we are grateful to Christopher DeBen and Craig Giannini of UC Davis for their support in testing and demonstration activities. Finally, we wish to acknowledge the substantial support of Dr. Shahab Akbari for his help in the design, development, and installation of the control system used in BBADS system.

PREFACE

The California Energy Commission Public Interest Energy Research (PIER) Program supports public interest energy research and development that will help improve the quality of life in California by bringing environmentally safe, affordable, and reliable energy services and products to the marketplace.

The PIER Program conducts public interest research, development, and demonstration (RD&D) projects to benefit California.

The PIER Program strives to conduct the most promising public interest energy research by partnering with RD&D entities, including individuals, businesses, utilities, and public or private research institutions.

PIER funding efforts are focused on the following RD&D program areas:

- Buildings End-Use Energy Efficiency
- Energy Innovations Small Grants
- Energy-Related Environmental Research
- Energy Systems Integration
- Environmentally Preferred Advanced Generation
- Industrial/Agricultural/Water End-Use Energy Efficiency
- Renewable Energy Technologies
- Transportation

Demonstration of Full-Scale BBADS Biomass Densification System Final Report is the final report for the BBADS Biomass Densification System project PIR-11-021, conducted by Altex Technologies, Inc. The information from this project contributes to PIER's Renewable Energy Technologies Program.

For more information about the PIER Program, please visit the Energy Commission's website at www.energy.ca.gov/research/ or contact the Energy Commission at 916-654-4878.

ABSTRACT

In this project, the research team built and demonstrated a Biomass Blending and Densification System (BBADS) that reduces the cost for biofuels and biopower production by increasing the bulk and density of the biomass. The storage, handling and transport costs of biomass feedstocks are reduced, making the end-to-end costs of biofuels and biopower more competitive with fossil fuel-based processes. The BBADS creates biomass logs that are denser than those usually produced by other processes. Testing was completed at the University of California, Davis Agronomy station. During these tests, a contracting company measured the electric power and fuel consumption. Using the energy inputs and capital cost derived from BBADS fabrication and assembly experience, the estimated BBADS densification costs were found to be much lower than current pelletization and cubing densification methods. . The reductions in electricity, truck fuel, and greenhouse gas and other emissions indicate substantial benefits that support the State of California's renewable energy initiatives and the California ratepayers. Country-wide beneficial BBADS impacts could be several times larger, given the potential availability of 365 million/tons per year of agricultural residues in the United States.

Keywords: Biomass, densification, agriculture residue, BBADS densification, inherent binder, binder activation and setting, low pressure compression

Kelly, John, Nehru Chevanan (Altex Technologies Corporation). 2015. *Demonstration of Full-scale BBADS Biomass Densification Equipment*. California Energy Commission. CEC-500-2016-031.

TABLE OF CONTENTS

Acknowledgements i

PREFACE ii

ABSTRACT iii

TABLE OF CONTENTS iv

LIST OF FIGURES vii

LIST OF TABLES xi

Executive Summary 1

Introduction 1

Project Purpose 1

Project Processes 1

Project Results 2

Project Benefits 2

CHAPTER 1: Introduction 3

CHAPTER 2: Full-Scale System Design 10

2.1 Biomass Feeder Design 10

2.1.1 Feeding System for Direct Feeding of Mini Bales 10

2.1.2 Feeding System for Loose Biomass 11

2.2 Compaction System Design 15

2.2.1 Methods to Prevent Gate Jamming 16

2.2.2 Methods to Prevent Gate Galling 18

2.3 Heating System Design 21

2.4 Cooling System Design 23

2.5 Hydraulic System and Controls Design 27

2.6 FMEA Analysis 30

CHAPTER 3: Test System Fabrication and Subsystem Tests 37

3.1 Fabrication and Test of Round to Square Log Transition Section 37

3.2 Fabrication of Test System for Assessment of Activation Energy 40

3.3 Fabrication of Cooling Section 43
3.4 Fabrication of Heating Section and Gate Assembly 46
3.5 Fabrication of Bale feeder 49
3.6 Installation and Test of Cooling Section 55
3.7 Preparation for Installation of Heating Section 57
3.8 Fabrication and Test of Bale Feeder with Motors and Conveyor 58
3.9 Assembly and Test of Main Feeder with Bale Feeder 60
3.10 Integration of BBADS Subsystems 62
3.10.1 Integration of Feeder with BBADS Equipment 62
3.10.2 Integration of Bale feeder 63
3.10.3 Integration of Cooling System with BBADS Equipment 64
3.10.4 Development and Integration of Hydraulic System 66
3.10.5 Integration of Hydraulic System with Feeding System 69
3.10.6 Development and Integration of Thermal Fluid System 71
3.10.7 Development and Integration of Control System 74
CHAPTER 4: Laboratory Testing 79
4.1 Component Level Testing 79
4.1.1 Testing of Linear Position Control Device 79
4.1.2 Development and Testing of Control System 81
4.2 Subsystem Level Testing 84
4.2.1 Bale Breaker Tests 84
4.2.2 Integration and Testing of Hydraulic System 86
4.2.3 Testing and Integration of Thermal Fluid System with the New Burner 87
4.2.4 Cooling System Performance Testing 88
4.3 Results of BBADS Integration Testing 89
4.4 BBADS Cylinder Rod Failure and Corrective Action 99
4.5 Evaluation of Machine Performance at Watsonville Facility 100
CHAPTER 5: Field Testing 104

5.1 Development and Installation of Electronic Control Unit 104
5.2 Installation of Linear Position Control Devices 109
5.3 Installation of Flow Meter and Mixing Valve in the Cooling Section 109
5.4 Installation and Testing of Transducers in the Cooling Section 110
5.5 Installation and Testing of Transducers in the Compression System 111
5.6 Installation and Testing of Transducers in the Heating System 112
5.7 Decommissioning of BBADS Subsystems and Transport to UC Davis 113
5.8 Field Test Installation Activities 113
5.8.1 Installation of Fuel Supply System 113
5.8.2 Installation of Electric Generator 114
5.9 Evaluation of BBADS Performance at UC Davis 114
5.9.1 BBADS Testing 114
5.9.2 Measurement and Verification Work 116
5.10 Product Evaluation 118
5.10.1 Size Reduction 119
5.10.2 Proximate and Ultimate Analysis 133
5.10.3 Drop Tests 134
CHAPTER 6: Economic Evaluation 135
6.1 Case 1: BBADS Densification with Four Units of 0.5 Tons Per Hour Processing Capacity 136
6.2 Case 2: BBADS Densification with Two One Ton Per Hour Processing Capacity 138
6.3 Case 3: BBADS Processing Capacity Installed with Two Tons Per Hours Processing Capacity 140
CHAPTER 7: Conclusions and Recommendations 143
GLOSSARY 146
REFERENCES 148

LIST OF FIGURES

Figure 1: BBADS Pilot-Scale Equipment 3

Figure 2: Rendering of BBADS Pilot-Scale Equipment 5

Figure 3: BBADS Compactor – Step 1: Bale Loading 6

Figure 4: BBADS Compactor Step 2: Roof Compression of Bale 6

Figure 5: BBADS Compactor Step 3: Ram Compaction and Log Heating 7

Figure 6: BBADS Compactor Step 4: Log Transfer to Cooling Zone 7

Figure 7: BBADS Compactor Step 5: Ram Retraction for Next Cycle 8

Figure 8: Preliminary Biomass Feeding Table Design for Mini Bales 11

Figure 9: SolidWorks Model of Bale Feeding System Frame 13

Figure 10: SolidWorks Model of the Loose Material Feeding Section Fabricated and Integrated with the BBADS Compaction Equipment 14

Figure 11: SolidWorks Model of the Shovel Door Fabricated and Integrated with the BBADS Compaction Equipment 15

Figure 12: Sliding Gate to Prevent Jamming of Primary Gate 17

Figure 13: Peg Type Gate Jamming Prevention Component 18

Figure 14: Improved Gate Design for Preventing Jamming 19

Figure 15: Displacement of Gate with Full Application of 100,000 lbs Force through Pusher Piston 21

Figure 16: Picture of Commercially Available Evaporative Cooling Systems of Required Capacity Cooling Tower Systems 25

Figure 17: Picture of Commercially Available Dry Cooling System without Circulating Pump, Coolant Tank, and Frame 26

Figure 18: BBADS Process Flow Diagram 29

Figure 19: Hydraulic Circuit for Bale Breaker (left) and Two Additional Actuators in the BBADS Equipment(right) 30

Figure 20: Functional Block Diagram for the Full-Scale BBADS Equipment 31

Figure 21: Solidworks Model of Round to Square Transition Section 38

Figure 22: Picture of Round to Square Transition Section Fabricated as per Solidworks Model 38

Figure 23: Picture of Round to Square Transition Section after Installation in the Pilot-Scale BBADS Equipment for Testing 39

Figure 24: Testing of Round to Square Transition Section 40

Figure 25: Modifications and Testing of Simulated Full-Scale Activation Section 41

Figure 26: Logs Prepared in the BBADS Equipment with Higher Throughput Test 42

Figure 27: Exploded View of One Cooling Section Showing Details of Oil Flow Lines 44

Figure 28: Frame of Modular Cooling Section 45

Figure 29: Cooling Section Fabricated at Nunez Precision Welding Ready for Assembling With Purchased Evaporative Cooling System 45

Figure 30: Picture of Evaporative Cooling Section Purchased 46

Figure 31: Model of Heating Section Used to Prepare Manufacturing Drawings 47

Figure 32: Picture of Heating Section Fabricated at Nunez Precision Welding Inc. 48

Figure 33: Exploded View of Model of the Gate Section Used to Prepare 49

Figure 34: Picture of Frame of Bale Feeding System 50

Figure 35: Picture of Frame of Bale Feeding System Ready for Installation of Conveyor and Hydraulic Motors Ready for Assembling with Full-Scale BBADS System 51

Figure 36: Assembly Drawing of Feeder to be Integrated with the Main Frame 52

Figure 37: Assembly Drawing of Main Door of the Feeder 53

Figure 38: Picture of Feeder under Fabrication 54

Figure 39: Picture of Door Components Under Fabrication 55

Figure 40: Picture of BBADS System after Installation of New Cooling System 56

Figure 41: Picture of Evaporative Cooling System after Assembling with BBADS Equipment 57

Figure 42: Rotation of BBADS System Components at Watsonville Facility of Altex 58

Figure 43: Picture of Bale Feeding System Ready for Assembling with Full-Scale BBADS System 60

Figure 44: Picture of Feeder under Fabrication 61

Figure 45: Mounting Components for Integrating 40″ Long 4″ Diameter Hydraulic Cylinder with Shovel 61

Figure 46: Picture Showing Main Feeder Integration with the Main Frame of BBADS Equipment 62

Figure 47: Picture of Installed Door along with Hydraulic Cylinder 63

Figure 48: Picture of Installation of Shovel Cylinder in the Frame of Bale Feeder 64

Figure 49: Picture of Linear Position Control Device Installed in the BBADS Equipment 64

Figure 50: Picture of Complete Cooling System of BBADS Equipment at the Watsonville Facility 66

Figure 51: Picture of Complete Hydraulic System of BBADS System at the Watsonville Facility 68

Figure 52: Main Power Unit with Installed New Higher Power Motor 69

Figure 53: Picture of Main Compaction Section (left) Integrated with Feeding Section (right).... 70

Figure 54: Picture of complete Feeding System of BBADS Equipment at Watsonville Facility ... 71

Figure 55: Installation of Expansion Tank on the Thermal Fluid System 72

Figure 56: Picture of New Propane Burner to be Installed in the Thermal Fluid System..... 73

Figure 57: Picture of Complete Thermal Fluid System for BBADS Equipment at the Watsonville 73

Figure 58: Pictures of (a) All the Electrical Components Installed on the Board (top left) (b) Electrical Board Installed inside the Control Box (top right) (c) Fully Developed Control Box (bottom left) (d) Electrical Outlet for Computer and Data Cable Connection 75

Figure 59: Picture of Testing of cDAQ Modules and Other Components before Installing on the BBADS Equipment..... 76

Figure 60: Picture of Front Panel of labVIEW Program in Manual Sequence Control 77

Figure 61: Picture of Front Panel of labVIEW Program in Automated Sequence Control 77

Figure 62: Picture of Control System after Integration with BBADS Equipment at the Watsonville Facility 78

Figure 63: Left: Rod Type Linear Position Control Device for the Main Cylinder; Right: Magnet that Follows Pusher by Attaching on Thermal Oil Flow Lines. 80

Figure 64: Picture of Installed Linear Position Control Device on Shovel Cylinder 81

Figure 65: Testing of cDAQ module, Solenoid Switches, and Electronic Components at Altex Controls Lab..... 82

Figure 66: Picture of Front Panel of labVIEW Program in Manual Sequence Control 83

Figure 67: Picture of Front Panel of labVIEW Program in Automated Sequence Control 83

Figure 68: Bale Feeder Operation for Separation of Biomass Flakes 84

Figure 69: Bale Feeder Operation for Separation of Bales 86

Figure 70: Picture of Hydraulic System Installed and Tested for Proper Operation 87

Figure 71: Picture of Thermal fluid System Tested with Propane Fuel 88

Figure 72: Effect of Total Length of Biomass Logs in the Tube on the Pressure in the Hydraulic System 90

Figure 73: Temperature Profile in the BBADS Equipment during Log Making Process 92

Figure 74: Hydraulic System Pressure Recorded during Testing with New Cooling System 93

Figure 75: BBADS Feeder Ready for Testing 94

Figure 76: Step1: Picture Showing Feeder Filled with Biomass 95

Figure 77: Step 2: Picture Showing Biomass with Door Closed 96

Figure 78: Step 3: Picture Showing Biomass Compressed with Shovel into the Main Barrel 97

Figure 79: Step 4: Picture Showing Biomass Compressed by the Pusher into the Heating Section of BBADS Equipment 98

Figure 80: Picture of Shovel and Broken Shovel Cylinder Rod End 100

Figure 81: Picture of Corn Stover and Wheat Straw Logs Made during Testing at Watsonville101

Figure 82: Graph Showing Pressure Inside the Manifold of Two Hydraulic Power Units, and Position of Pusher and Shovel During Testing 102

Figure 83: Graph for Data Collected on Thermal Fluid Temperature, Water Temperature, Hydraulic Fluid Temperature, Burner Flow Rate 103

Figure 84: Electrical Control Panel (left) and Electrical Control Box (right) for BBADS Equipment 105

Figure 85: Pictures of (a) All the Electrical Components Installed on the Board (top left) (b) Electrical Board Installed inside the Control Box (top right) (c) Fully Developed Control Box (bottom left) (d) Electrical Outlet for Computer and Data Cable Connection 106

Figure 86: Picture of Testing of cDAQ Modules and Other Components before Installing on the BBADS Equipment 107

Figure 87: Front Panel Window of the labVIEW Program of Full-Scale BBADS Equipment 108

Figure 88: Block Diagram of labVIEW Program Developed for Full-Scale BBADS Equipment 108

Figure 89: Installation of Flow Meter and Mixing Valve in the Cooling Section 110

Figure 90: Picture of Motorized Three-Way Valve Installed for Controlling the Pressure inside the Main Cylinder 111

Figure 91: Picture of Pressure and Temperature Transducers Installed on the Hydraulic System of BBADS System 112

Figure 92: Pressure and Temperature Transducers Installed in the Thermal Fluid System for Fully Automated Control of the BBADS System 113

Figure 93: Picture of BBADS Equipment Installed at UC Davis 114

Figure 94: Temperature Conditions at UC Davis during July – August 2014 116

Figure 95: Schematic of Advanced Shear Size Reduction Device 120

Figure 96: Corn Stover Grinding Test 1 Results 122

Figure 97: Corn Stover Grinding Test 2 Results 123

Figure 98: Corn Stover Grinding Test 3 Results 124

Figure 99: Switchgrass Grinding Test 1 Results 125

Figure 100: Switchgrass Grinding Test 2 Results 126

Figure 101: Switchgrass Grinding Test 3 Results 127

Figure 102: Wheat Straw Grinding Test 1 Results 128

Figure 103: Wheat Straw Grinding Test 2 Results 129

Figure 104: Wheat Straw Grinding Test 3 Results 130

LIST OF TABLES

Table 1: Density of Logs Made Field Testing of Six Different Biomass 4

Table 2: Densified Biomass Market Characteristics and Potential 4

Table 3: Full-Scale BBADS Recommended Refinements 9

Table 4: BBADS Full-Scale Equipment - Heating Section Specifications 22

Table 5: BBADS Full-Scale Equipment – Heating Section Oil Pump Specifications 23

Table 6: Comparison of Dry Type and Wet Type CoolingSystems 24

Table 7: BBADS Full-Scale Equipment - Cooling Section Specifications 27

Table: 8 Severity Ranking Table 33

Table: 9 Occurrence Ranking Table 34

Table: 10 Detection Level Ranking Table 34

Table: 11 Potential Failure Modes Identified for Full-Scale BBADS Equipment 35
Table 12: Test Conditions for the Bale Breaker at Altex Test Facility 84
Table 13: Cooling Section Testing Plan 89
Table 14: Estimation of Friction Coefficient inside the BBADS Equipment 91
Table 14b: Electrical and Thermal Requirements 118
Table 15: Corn Stover Grinding Test 1 Results 122
Table 16: Corn Stover Grinding Test 2 Results 122
Table 17: Corn Stover Grinding Test 3 Results 123
Table 18 Switchgrass Grinding Test 1 Results 124
Table 19: Switchgrass Grinding Test 2 Results 125
Table 20: Switchgrass Test 3 Results 126
Table 21: Wheat Straw Grinding Test 1 Results 127
Table 22: Wheat Straw Grinding Test 2 Results 128
Table 23: Wheat Straw Grinding Test 2 Results 129
Table 24: Power Tests – Corn Stover 130
Table 25: Power Tests – Switchgrass 131
Table 26: Power Tests – Wheat Straw 131
Table 27: Particle Size Distribution – Corn Stover 132
Table 28: Particle Size Distribution – Switchgrass 132
Table 29: Particle Size Distribution – Wheat Straw 133
Table 30: Carbon Hydrogen and Nitrogen Content Present the Biomass 133
Table 31: Heating Value of Biomass 134
Table 32: Volatile Matter and Ash Content Present in Biomass 134
Table 33: Electrical Energy Requirements for Making logs in BBADS Equipment 135
Table 34: Fabrication Cost of Full-Scale BBADS Equipment 135
Table 35: Case 1 136
Table 36: Fixed Cost for Log Production – Case 1 137
Table 37: Variable Cost for Log Production – Case 1 137

Table 38: Total Cost for Log Production 138
Table 39: Case 2 138
Table 39b: Fixed Cost for Log Production – Case 2 139
Table 40: Variable Cost for Log Production – Case 2 139
Table 41: Total Cost for Log Production – Case 2 140
Table 41b: Case 3 140
Table 42: Fixed Cost for Log Production – Case 3 141
Table 43: Variable Cost for Log Production 141
Table 44: Total Cost for Log Production 142
Table 45: Total Available Supplies of Hay and Agricultural Residues In California and U.S. 145
Table 46: Densification Power and Power Cost Savings 145
Table 47: Truck Trip Reduction Impacts with BBADS Versus Raw Biomass 145

EXECUTIVE SUMMARY

Introduction

Agriculture is a key industry in California that provides food for the nation as well as feed for animals. Currently, California produces 90 million tons each year of agricultural residue. These residues are currently under-used but could benefit farms when used as feedstocks for biofuels plants or as a co-fire fuel for power plants to reduce greenhouse gas emissions. Furthermore, removing agricultural residues and converting them into a higher value product will promote low-till farming practices that will reduce water pollution from nutrient runoff and air pollution from open burning of residues.

While high value food products can easily carry the burden of transportation and distribution costs to distant markets, low value feed and low value co-fire or biofuels feedstocks must minimize transport and distribution costs to control the end-to-end power generation or renewable fuels production costs. Without the control of these costs, co-fire fuel and biofuels will not reach the renewable energy goals required to address climate change and agricultural residues will remain a problem for farmers.

Key drivers of fuel production costs are the transportation and storage of biomass, which is directly related to material bulk density. A bulk density of approximately 35 lbs per cubic feet (cf) would optimize transportation and storage costs, which is much denser than raw material levels of 3 to 5 lbs per cf. Currently, double baling is used to densify feed, such as alfalfa, for domestic and, particularly, export markets in Asia. Cubing can also be used for this purpose and to support biomass feedstock densification for both biomass or co-fire power plant use. In both these cases, electric power use and overall costs are high, and neither method can achieve the optimal density of 35 lbs per cf.

Project Purpose

Prior pilot-scale development and test efforts, supported by the Department of Energy and Altex, showed that the BBADS process can create biomass logs with densities of 30 to 60 lb/cf, depending on feedstock biomass materials and equipment settings. Given the significant potential shown by these pilot-scale results, the purpose of this project was to build and demonstrate a full-scale BBADS system. Project tests and economic evaluations have reduced the technology's technical risk, and the results will help promote investment to commercialize this newly emerging energy- and cost-saving technology.

Project Processes

To demonstrate BBADS at an acceptable risk and cost, the pilot-scale system design was leveraged to generate the full-scale system design. Also, an automatic biomass feeder and controls were incorporated into the system to increase throughput and reduce operation manpower. Ahead of the field demonstration, the system was tested under controlled conditions at the Altex facility to prove the technology. The BBADS was then moved to the University of California, Davis Agronomy station and the operation was demonstrated using corn stover, wheat straw, and switchgrass. During these tests, Warren Engineering Company, a measurement and verification contractor, measured the electric power and fuel consumption.

Using these results, the performance, environmental, and economic benefits of BBADS were determined.

Project Results

Test results showed that good quality dense logs of more than 35 lb per cf could be produced from corn stover, wheat straw, and switchgrass at rates up to one ton per hour. The logs were durable and could be dropped from 10 feet onto a concrete pad without breaking. Also, they have a moisture content below 10 percent that suppresses biomass decay and energy loss when stored. More importantly, using the energy inputs and capital cost derived from BBADS fabrication and assembly experience, the BBADS densification costs for three cases using different throughput were calculated to be from between $13.32 per ton to $23.64 per ton. These costs are up to 87 percent lower than current pelletization and cubing densification methods.

Project Benefits

If the 90 million tons per year of agricultural residues in California could be densified by BBADS to create valuable feedstocks for biofuels or co-fire applications:

- The electric power reductions-- would be 13.95 million MWh/year. Assuming a power cost of $100/MWh, the power cost savings would be $1.4 billion/year.
- The transport trucks would be loaded at their maximum weight limit and the truck trips required to deliver the same total energy content would be substantially reduced.
- The truck diesel fuel use and diesel fuel cost reductions would be 49.5 million gallons per year and 1.92 billion dollars per year, respectively.
- NOx, particulate, volatile organics and greenhouse gas emissions from trucks would be reduced by 2 tons, 913 tons, 54 tons, 74 tons, and 544,000 tons per year, respectively.
- Conversion of the BBADS logs to biofuels or biopower would reduce greenhouse gas emissions by 17 million tons per year and 61 million tons per year, respectively.

CHAPTER 1: Introduction

BBADS is a biomass densification system that can increase the 3 to 5 lbs/cf density of field-collected biomass (e.g. energy crops, agricultural residues, forest residues) to over 40 lbs/cf logs that are approximately 11 inches in diameter and four inches or longer in length. Figure 1 presents a picture of the BBADS pilot-scale equipment, developed and tested under an earlier effort[1].

Figure 1: BBADS Pilot-Scale Equipment

Corn stover log

Switchgrass log

Wheat straw log

Photo Source: Altex Technologies Corporation

[1] California Energy Commission. *Biomass Blending and Densification System Final Report by Kelly, John, Nehru Chevanan, and et. al.* (Sacramento: California Energy Commission, 2011).

The lower part of the figure gives pictures of the high-density logs produced during testing. As shown, they are well formed and with a consistent diameter, with length varying with the amount of biomass loaded per BBADS compaction cycle. In addition to the types of logs shown in the pictures above, rice straw, alfalfa, and miscanthus logs of similar density and quality were formed. Table 1 presents a list of the log densities for these different biomass materials[1].

Table 1: Density of Logs Made Field Testing of Six Different Biomass

Sl No	Biomass	Density (lb/cf)
1	Switchgrass	36.4
2	Miscanthus	37.4
3	Corn Stover	34.0
4	Wheat Straw	32.6
5	Rice Straw	29.3
6	Alfalfa	37.6

Source: Altex Technologies Corporation

These materials cover biofuels feedstock, power plant co-fire, and feed export applications[2]. Each of these markets benefit from the reduction of biomass feedstock logistics costs as a result of densifying the material ahead of storage and transport[2]. Table 2 briefly summarizes the market characteristics and yearly potential over ten years[2].

Table 2: Densified Biomass Market Characteristics and Potential

Application	Material Processed (MM Tons/Year)	BBADS Units (Units/Year)	BBADS Sales ($MM/Year)
Cofiring with coal	13	87	28
Forage export	32	213	69
Biofuels feedstocks	450	3,000	975

Source: Altex Technologies Corporation

Besides being dense, BBADS logs are resilient, surviving over ten drops from a height of ten feet onto a concrete pad[1]. Because of the high density, durability, and low moisture content of BBADS logs, they are less costly to store, handle, and transport relative to raw biomass. Also, compared to pelletization and cubing approaches, BBADS costs are lower[1]. Given the good potential of BBADS to reduce the costs of biomass handling, storage, and transportation, the goal of this effort was to upgrade the pilot-scale BBADS equipment design, which was successfully tested at Altex and University of California, Davis (UC Davis), to produce a full-scale prototype system having a processing capacity of 15,000 tons/year. A major upgrade from the pilot-scale unit was to incorporate an automatic biomass feeder into the system that would reduce manpower needs and substantially increase throughput for the full-scale system. As part of preparations for design upgrades, BBADS pilot-scale test results and design features were reviewed.

---

[2] U.S. Department of Energy. *Role of alternative energy sources: Pulverized coal and biomass co-firing technology assessment* by *Timothy J. Skone*. (Washington, D.C.: GPO, 2012).

Figure 2 is a rendering of the BBADS pilot-scale system showing key components of the pilot-scale compaction equipment. As shown, the unit includes a biomass bale feeder, a compaction ram, a log heater, a cooler, and an articulated barrier against which the biomass is compacted.

Figure 2: Rendering of BBADS Pilot-Scale Equipment

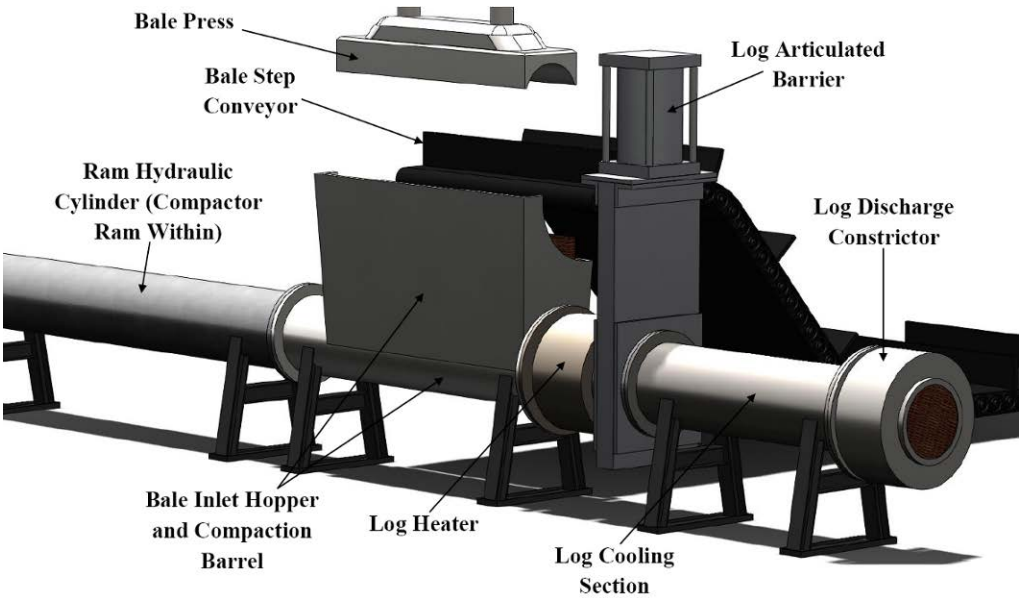

Operation of the BBADS compactor proceeds via the following steps, as illustrated in Figures 3 through 7:
Source: Altex Technologies Corporation

- Biomass bales of 12″ x 12″ x 48″ and 10 lb/cf density ride a conveyor that discharges the bale into the compactor hopper aligned with the barrel of the compactor (Figure 3)
- The compactor bale press then moves downward to modestly compress the bale into the needed cylindrical shape ahead of primary compaction (Figure 4)
- The heated piston ram is actuated and moves the bale into the heated zone and compresses the bale into a log at 40 lb/cf density against the heated barrier valve (Figure 5)
- After the log periphery is heated to the desired level, the barrier valve is lifted and the log is moved forward against the logs located in the downstream cooling zone. Through the length of multiple logs in the cooling zone and a constrictor at the downstream exit, logs in the cooling zone are still under compressive forces. Also, the movement of a new log into the cooling tube forces out a log at the discharge end (Figure 6)
- The compactor ram is retracted and the barrier valve closed to restart the process (Figure 7)

Figure 3: BBADS Compactor – Step 1: Bale Loading

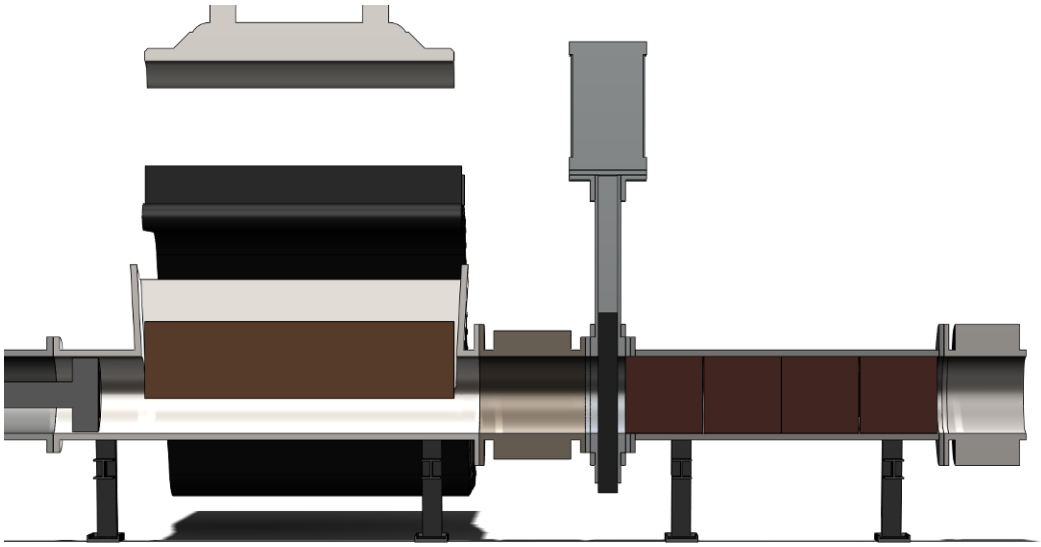

Source: Altex Technologies Corporation

Figure 4: BBADS Compactor Step 2: Roof Compression of Bale

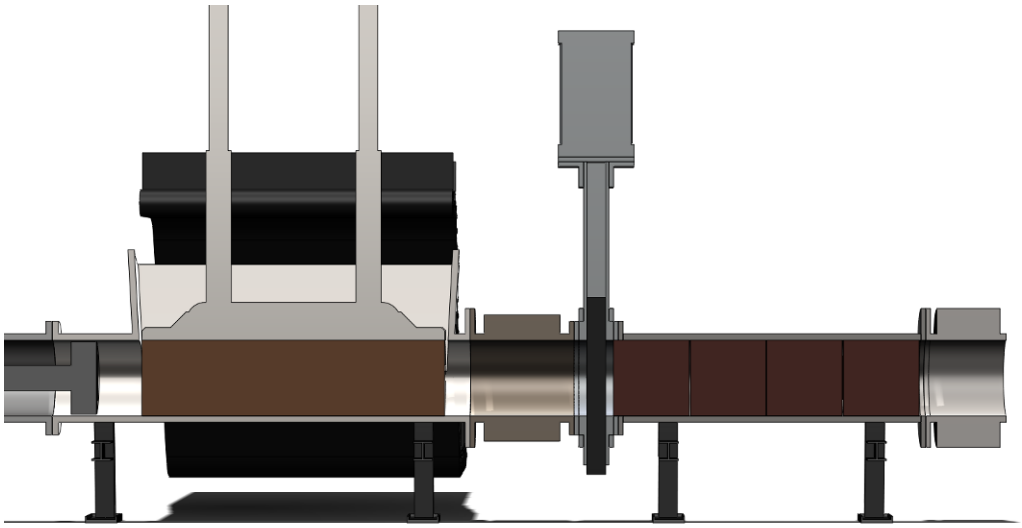

Source: Altex Technologies Corporation

Figure 5: BBADS Compactor Step 3: Ram Compaction and Log Heating

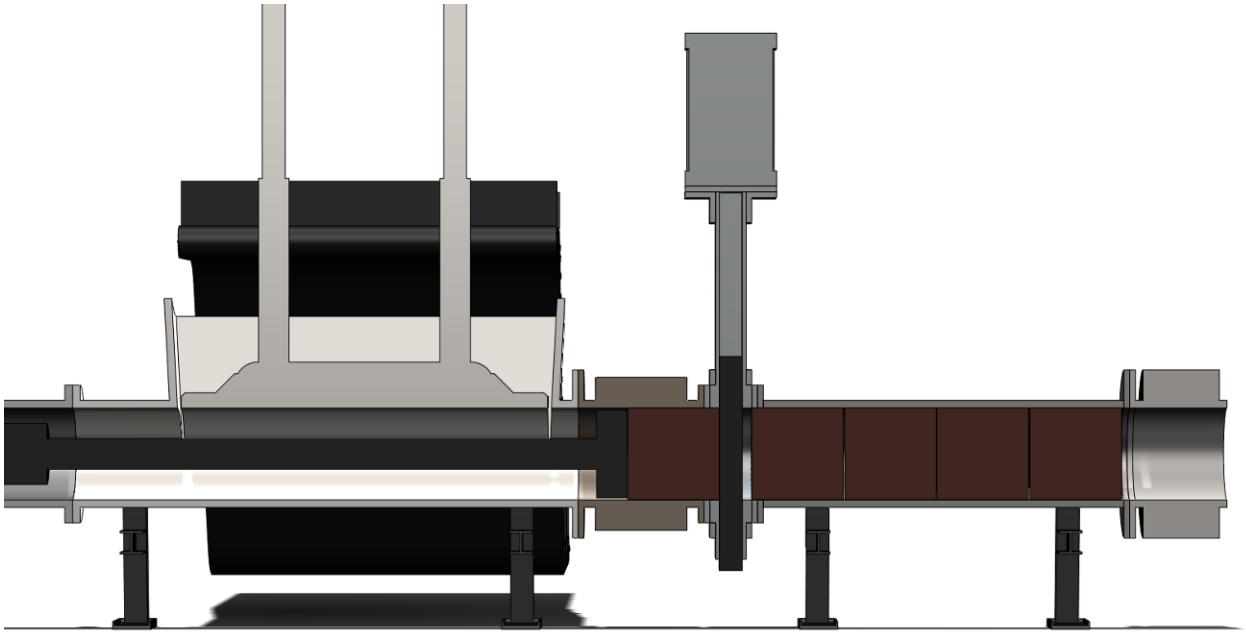

Source: Altex Technologies Corporation

Figure 6: BBADS Compactor Step 4: Log Transfer to Cooling Zone

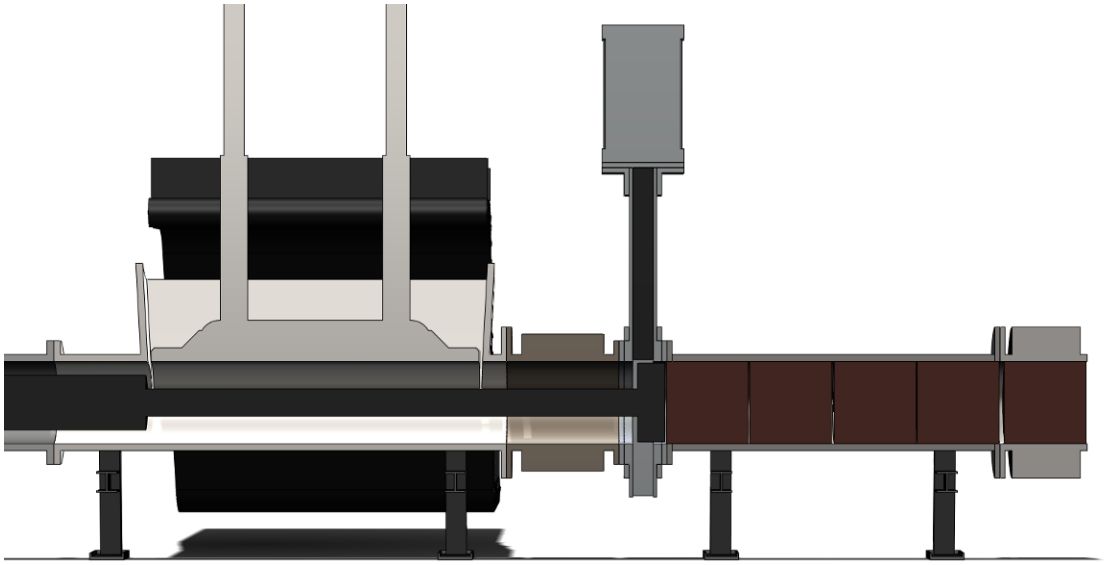

Source: Altex Technologies Corporation

Figure 7: BBADS Compactor Step 5: Ram Retraction for Next Cycle

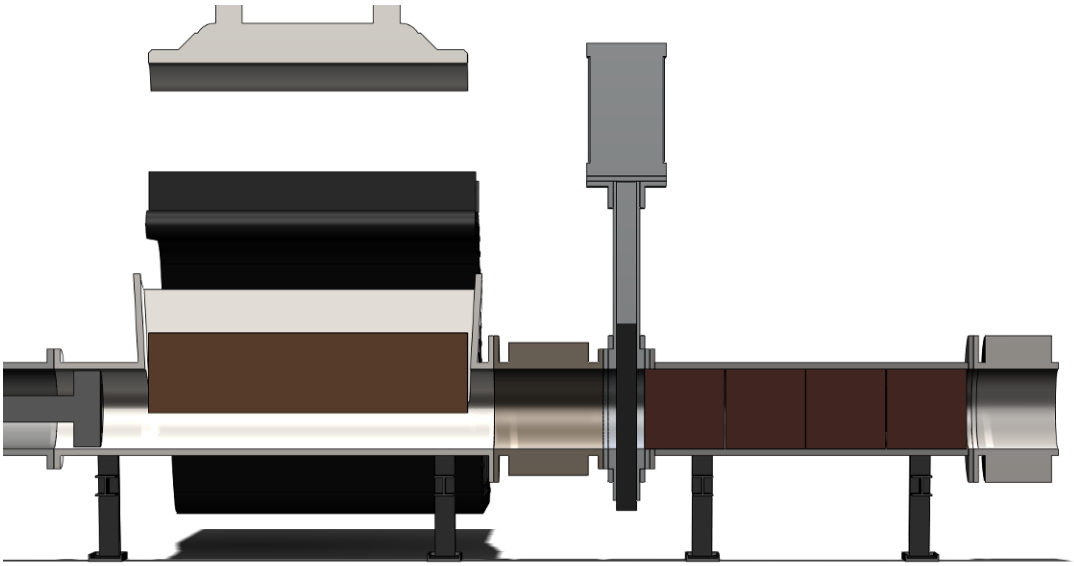

Source: Altex Technologies Corporation

Through the repetition of the above five-step process, logs are produced at the needed rate. The ram forces are produced by a high pressure cylinder fed by a positive displacement hydraulic fluid pump that is well proven in compactor use[1]. The compaction zone, ram face, and barrier heating are accomplished by a hot oil system that is fired by low-cost biomass in the production system. Thermal oils are available that can meet the maximum 302°F (150°C) oil temperature requirement and flow rates are high enough to yield good heat transfer results. For log cooling, positive air flow over the shell or liquid cooling in a jacket surrounding the shell will augment the cooling produced by heat soaking into the log interior, which promotes evaporation of water. Sufficient vapor exit paths are included over the cooling section length to allow vapor to escape while still retaining the solids at the required compression level. The pilot-scale BBADS equipment design, illustrated in Figure 2, and the process noted in Figures 3 to 7 were utilized to successfully produce many tons of logs under the pilot-scale test effort.

Based on the pilot-scale project results, the overall compaction design was considered to be robust and able to produce good quality densified biomass logs at lower power needs than existing densification methods. While the basic process and mechanical design approaches were viable, some areas identified for refinement under the current effort include:

- Hydraulic system modifications to increase throughput and meet automation requirements needed for commercial scale operation.
- Reduce inherent binder activation time.
- Improve feed door action and throughput.
- Improve compaction gate wear characteristics.

- Improve heating and cooling system for increased throughput.

Based on this initial review, the recommended refinements to improve product throughput, quality, and reduce costs are summarized in Table 3. Also, as noted in the first entry, an automatic feeder was incorporated into the design to receive standard baled biomass and convert the bales to a loose material that would be compatible with the compaction equipment. All of these areas were addressed in the full scale system design.

Table 3: Full-Scale BBADS Recommended Refinements

Subsystem	Recommended Refinement	Benefit
Biomass Bale Feeder	Add automated biomass bale feeder/breaker	Reduces manpower and increases throughput
Feeding Inlet	Switch from vertical entry and hinged door to horizontal entry and linear actuated door; increase inlet length	Reduces opportunity for feed material blocking door actuation; more compatible with standard bales and biomass
Compaction Zone	Increase piston stroke length	More compatible with standard bale, bale breakers and produces higher throughput
Heating Zone	Extend heating zone past gate valve	Decouples compaction from heating time; higher throughput and better binder activation
Gate Valve	Double gate action and biomass spring back barrier	Mitigates log spring back effect and increases valve action reliability
Cooling Zone	Extend cooling zone	Improves binder setting and log quality
Oil Heater	Switch from electric to fuel based heater	Reduces operating cost, as required for commercial operation

Source: Altex Technologies Corporation

CHAPTER 2:
Full-Scale System Design

As listed in Table 3, several processes were upgraded in the full-scale BBADS design. To accomplish this objective, proprietary analysis tools and commercial Computer Aided Design software packages utilized in the pilot-scale BBADS effort[1] were employed in this effort.

2.1 Biomass Feeder Design

To maximize throughput, biomass must be automatically fed into the BBADS compaction subsystem. As harvested, biomass is compacted into bales of approximately 10 lbm/cf that are secured with ties. This allows the material to be moved off of the field to protect nearby storage that will preserve the energy or feed value of the material. Bale sizes vary substantially and configurations vary from prismatic to round, with large round bales having the lowest price. For higher value feed products, small bales are sometimes preferred for individual animal feeding. Given the flexibility of the BBADS system to address feed, cofire, and biofuels feedstock markets, it was of interest to determine if the system could utilize mini bales as well as loose material created by breaking large bales in a bale breaker. These approaches address different price point markets, with the large, low-cost bales being utilized in the low price biofuels supply market and the mini bales being utilized in feed markets.

2.1.1 Feeding System for Direct Feeding of Mini Bales

The BBADS bale feeding system will utilize a similar approach to a standard double compression baling system. In this design, the biomass is fed from a horizontal table into the BBADS cylindrical compaction chamber. This departs from the pilot-scale feed design by the use of a horizontal access to the compaction tube versus the vertical access for the pilot-scale system, as illustrated in Figure 2. A preliminary design of the feeding table, which is attached to the BBADS compaction system, is presented in Figure 8. In this design, a hydraulically actuated shovel will feed the biomass mini bales from the table into the chamber. By using a shovel, the initial feed of the material is more positive than the vertical gravity feed of the original pilot-scale BBADS design shown in Figure 3. The feeding shovel, which is operated by a hydraulic cylinder, will feed one bale of biomass every 15 seconds into the compaction section. This will yield the desired high throughput.

Figure 8: Preliminary Biomass Feeding Table Design for Mini Bales

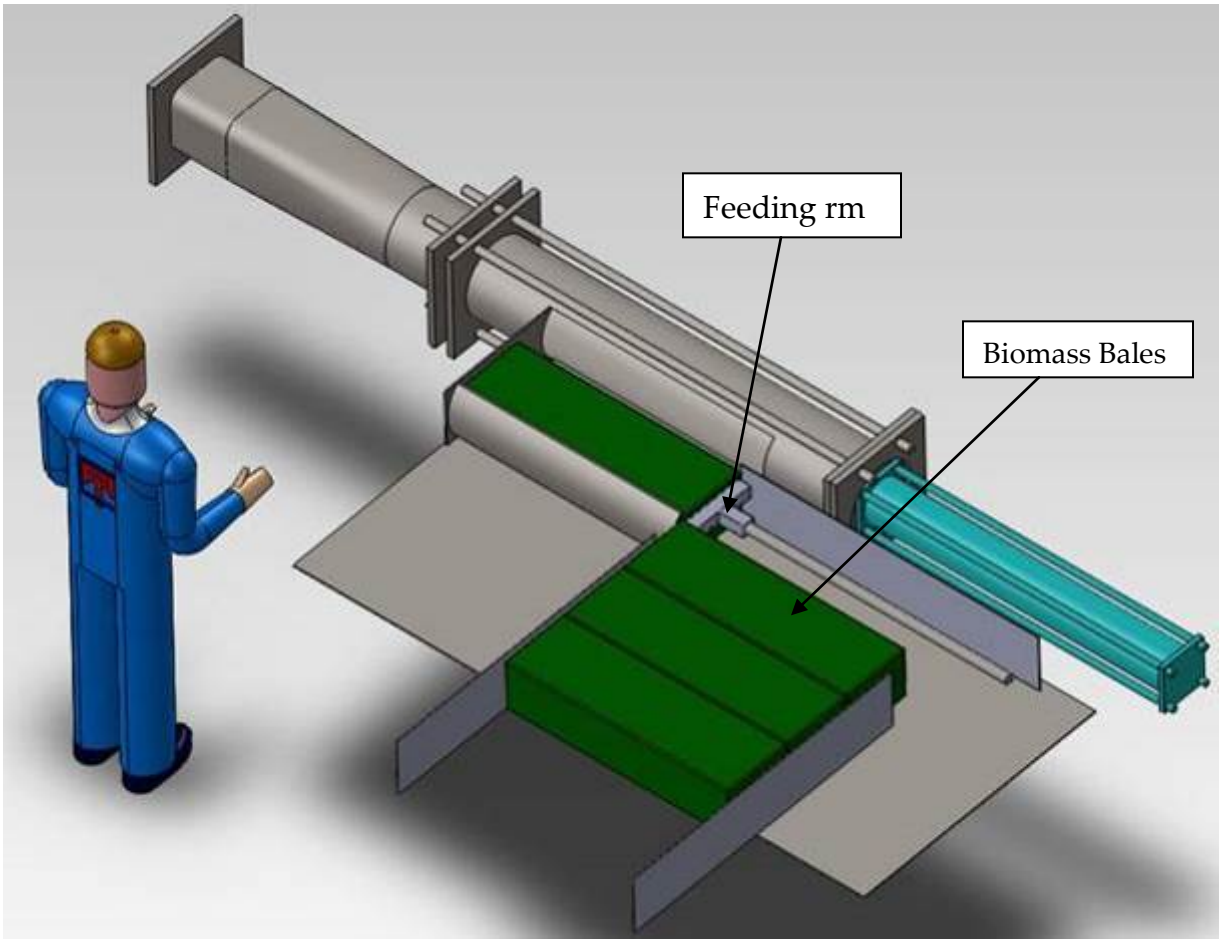

Source: Altex Technologies Corporation

2.1.2 Feeding System for Loose Biomass

To minimize cost for lower product value applications, such as power plant co-fire or biofuels feedstocks, the low cost, large, round or prismatic bales are of high interest.

The DOE has carried out experiments and concluded that the best low-cost collection and short distance transport method for energy crops and agricultural residues is to use large bales that significantly reduce the collection time and increase throughput[3]. The BBADS system will use large bale collection methods, and the large bales will be broken down and fed into the BBADS equipment. Large agricultural equipment manufacturers, such as John Deere[4] and Vermeer[5], manufacture bale processing equipment that can be directly added as front-end equipment to the BBADS system. The size, capacity, and mode of operation of these machines was reviewed, and the appropriate equipment was identified for breaking the large bales into a format that can

[3] U.S. Department of Energy. *Uniform format bioenergy feedstock supply system design report series by Hess, JR., KL Kenney, et al.* (Washington, D.C.: GPO, 2009).
[4] http://www.deere.com/en_US/regional_home.page
[5] http://www2.vermeer.com/vermeer/NA/en/N/industries/agriculture

be fed into the full-scale BBADS equipment with a cycle time of approximately 15 seconds. The BBADS process starts with feeding large bales that are available in the field into the front end of the BBADS equipment. The feed system consists of a bale breaker to deconstruct the bale and continuously feed the de-baled, or loose, biomass into the BBADS system. For this purpose, various commercial bale breakers were reviewed for compatibility with BBADS.

Bale breakers are available in different sizes, and each machine is developed for specific bales, such as small rectangular bales, large rectangular bales, and round bales. Rectangular bales are the most popular bale configuration in California. Most bale breaking operations are used to distribute the material for animal feeding or bedding. Therefore, the value of de-baling in support of BBADS equipment feeding needed to be assessed ahead of implementing this equipment. Experiments were carried out to answer the following questions:

- What is the de-baled material density and how widely does it vary?
- How does the de-baled material respond to modest re-compression that is needed to optimally load the BBADS compaction equipment?
- What force is required to achieve various pre-compression levels?

During testing at Altex, bales were broken down using a process similar to that which occurs in commercial bale breakers, where a moving chain is outfitted with channel or angle iron that are scrapped across the bale surface; and thereby, compact bales are desconstructed. For the Altex tests, a metal channel section was used. The densities of switchgrass and rice straw produced using this process was measured. For the initial test, a switchgrass bale of 22″ X 16″ X 48″ dimension, and an initial density of 11 lbs/cf, was broken down into flakes and further broken down into loose material. Flakes are distinct bale segments, approximately four-inches thick that are produced by the cyclical compaction operation of the field baling equipment. The measured density of individual flakes are in the range of four to five lbs/cf. However, further breaking the flakes into loose material reduces the density to two lbs/cf. If the BBADS equipment compacts the feed material to 40 lbs/cf, then the compaction ratio is approximately 10 for flakes and 20 for loose material. This difference has to be considered in the feeding system design. Given the BBADS compaction system feeding door width of 36″ and door operating stroke of 24″, a feeding rate of 10 lbs and 22 lbs of materials can be achieved using loose materials and flakes, respectively. The throughput rate will be related to this feeding rate, for an equal process time. These results indicate the importance of the feed process.

Based on experimental results, it was determined that feeding biomass in the loose format will result in more uniform and better quality logs. However, it takes more time and effort to feed the low-density loose material. Feeding in the form of higher density flakes (bale segments produced by periodic collection and compression during bale process) has the potential to increase the total throughput of the machine. However, the flake segments produce non uniform strength in the logs, with weakness occurring at flake interfaces within the log. Also, analysis of the results showed that there are differences in weights of flakes in a bale depending on the type of biomass. For example, the weight of an alfalfa flake is in the range of five to eight lbs and the weight of wheat straw flakes are in the range of three to six lbs. It was also observed

from testing that there will be significant differences in the weight of different flakes in a single bale. Since the initial bale flake is composed of a complete loading of the compaction chamber and each subsequent chamber loading is reduced by the already compressed material, then the first flake will have a higher weight than subsequent flakes. The weight of flake at one end of the bale was in the range of seven to eight lbs and flake in the other end was in the range of five to six lbs. Given these differences, it was decided to focus on loose feed material for better log uniformity.

The raw biomass feeding system for BBADS consists of two steps: (1) initially breaking the bales into loose material in the bale feeder, and (2) feeding the loose material into the BBADS system in the feeding section. Figure 9 shows the SolidWorks model of the main frame component of the bale feeding system. This unit consists of a chain-based conveyor that moves two side-by-side bales periodically and automatically against a bale breaker. The breaker consists of a chain-based conveyor, with the frame illustrated in Figure 9 that is fitted with metal channels that contact the bale and deconstruct the compacted material. Through imparting momentum to the material, the breaker throws the bale upwards and over to distribute the material on the feeder table, which is mounted downstream of the bale feeder. This feed unit operates periodically to load the feed table ahead of pushing the material into the compaction cylinder after the compaction piston is retracted in preparation for the next loading.

Figure 9: SolidWorks Model of Bale Feeding System Frame

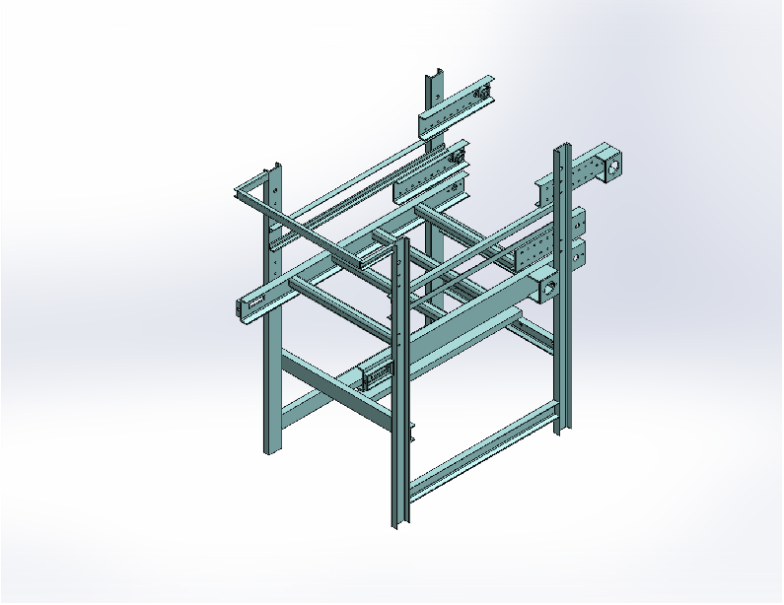

Source: Altex Technologies Corporation

Figure 10 shows the SolidWorks model of the table feeding component that is located downstream of the bale breaker frame and is used to collect the loose biomass materials derived from the bale breaker. The material is collected over sufficient time to produce the correct weight and length log. While the controls can be used to set the collection time, a weigh table is built into the bottom of the tray to enhance control of the weight of each cycle load and

resulting log. Once the proper amount of material is collected, the bale breaker and bale conveyor is halted. A door is then closed over the collected biomass to create a roof. At this point, a shovel is activated to push the collected biomass material that is trapped between the table and roof into the compaction cylinder through an opening in the side of the tube.

Figure 10: SolidWorks Model of the Loose Material Feeding Section Fabricated and Integrated with the BBADS Compaction Equipment

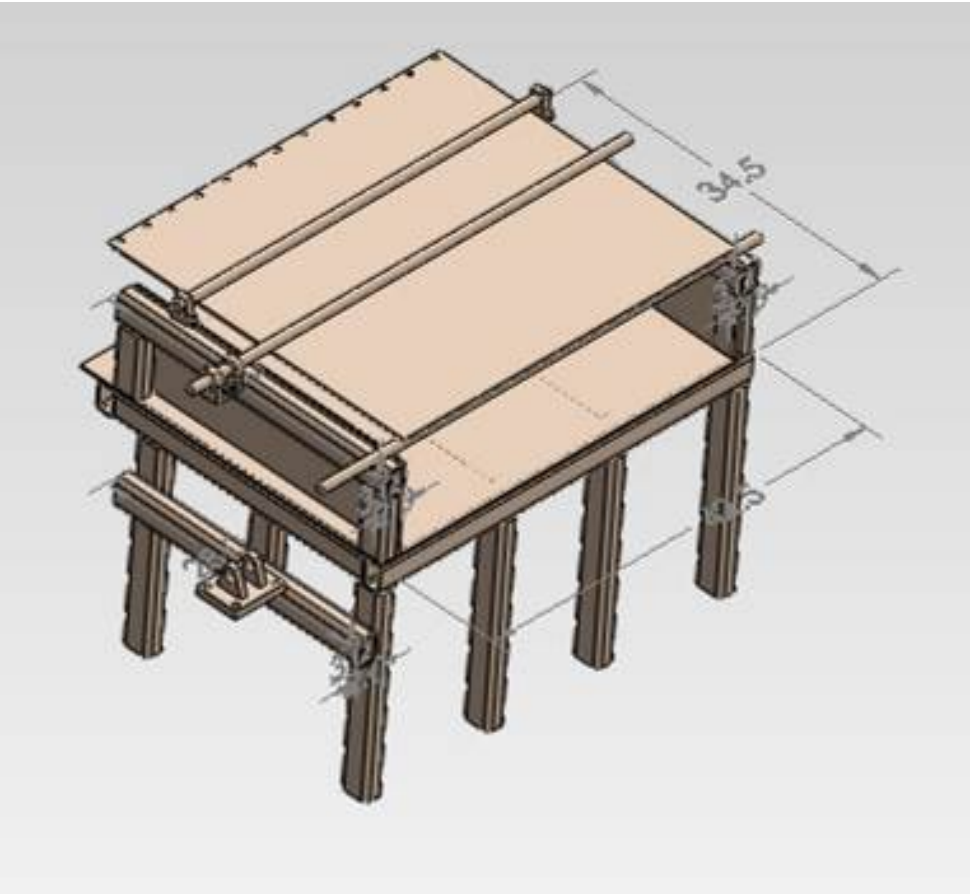

Source: Altex Technologies Corporation

Figure 11 shows the SolidWorks model of the shovel, support wheels and hydraulic cylinder attachment points that is used to push the loose biomass on the feeder table into the BBADS compaction system.

Figure 11: SolidWorks Model of the Shovel Door Fabricated and Integrated with the BBADS Compaction Equipment

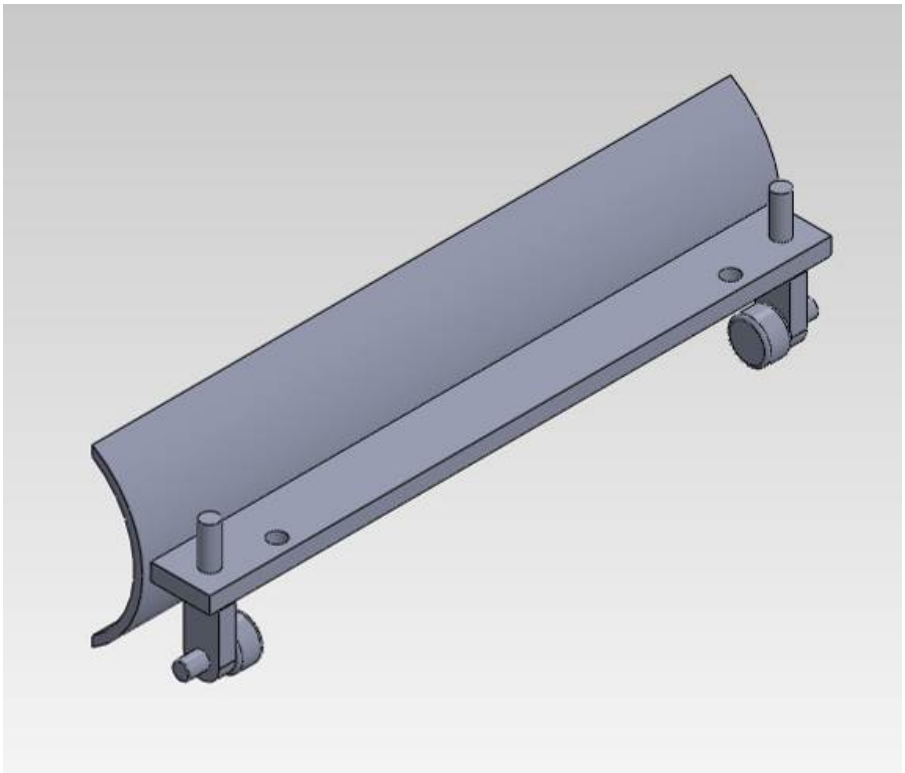

Source: Altex Technologies Corporation

These SolidWorks models were used to prepare the Bill of Materials and detailed engineering drawings used for fabrication of the feeding system. To complete the design of the feeder system, components- such as chains, sprockets, bearings, motors, metal sheet coverings, switches, and a weight scale- and position sensors were also specified. Fabricators and hydraulic component engineers at West Coast Fluid Power[6] reviewed the designs to assess manufacturability and their recommendations were implemented, as needed, to maximize the probability of success. Also, as described below, a brief Failure Mode Effective Analysis (FMEA) process was used on the complete system design to define and address significant design risks.

2.2 Compaction System Design

The compaction system design installed on the pilot-scale BBADS system was reviewed to assess viability for the full-scale facility. To significantly enhance BBADS machine throughput, the feed opening area of the compaction section should be three feet long versus the two-foot-long feed opening that was used in the pilot-scale BBADS system. In addition, the benefits of feeding in the form of small bales (11″ X 9″ X 36″) and feeding loose biomass after breaking

[6] http://www.comoso.com/locations

large bales (22″ X 18″ X 48″ and larger) were compared. Altex contacted Chamberlain[7], an agricultural materials supplier, and reviewed the possibility of making three-feet-long small bales using existing baling equipment. This length appears to be feasible. Given this positive response on three feet length bales, Altex further analyzed the benefits of building a BBADS compression subsystem design that can handle intact small bales and loose feedstock prepared from large bales. Feeding small square cross section bales will increase throughput for the high value BBADS animal feed related market. However, given the lower costs of large bales, the loose biomass feeding from large bales will still be the lowest overall cost process.

For the BBADS compaction step in the pilot-scale BBADS system tested at UC Davis, a movable gate was utilized to provide a back stop for the biomass as the pusher moves forward to compact the biomass. The gate needs to provide continuous and trouble-free operation to optimize economics. A problem sometimes observed in the operation of the pilot-scale BBADS equipment was the jamming of the gate due to spring back of the biomass into the path of the gate. After moving the compressed biomass from the compression zone to the heating zone, via the pusher, the material springs back. If the spring back is large enough, it results in some of the material being in the path of the gate that can then jam the gate. During testing of the pilot-scale BBADS equipment at UC Davis, various methods were used to reduce/eliminate the jamming of the gate due to spring back of the biomass. One method was to move the compressed biomass to a greater distance beyond the gate. The level of spring back in the compressed biomass depends on the type of biomass and the movement distance has to be adjusted for different materials. For example, materials, such as corn stover and alfalfa, exhibit minimum spring back compared to other materials, such as switchgrass and miscanthus. Hence, adjustments have to be made for trouble-free operation of the gate whenever the material is changed. To avoid this problem, various options to avoid gate jamming were considered.

2.2.1 Methods to Prevent Gate Jamming

In order to prevent jamming of the gate, two different primary options were considered. One method was to develop a second gate aligned closely with the main gate, but sliding in the opposite direction, as shown in Figure 12. This will prevent the migration of biomass into the gate opening and prevent the wedging of biomass and jamming of the gate. The operating sequence, mode of gate operation, and gate manufacturing methods were considered in the design.

[7] https://www.facebook.com/pages/Chamberlain-Farms/

Figure 12: Sliding Gate to Prevent Jamming of Primary Gate

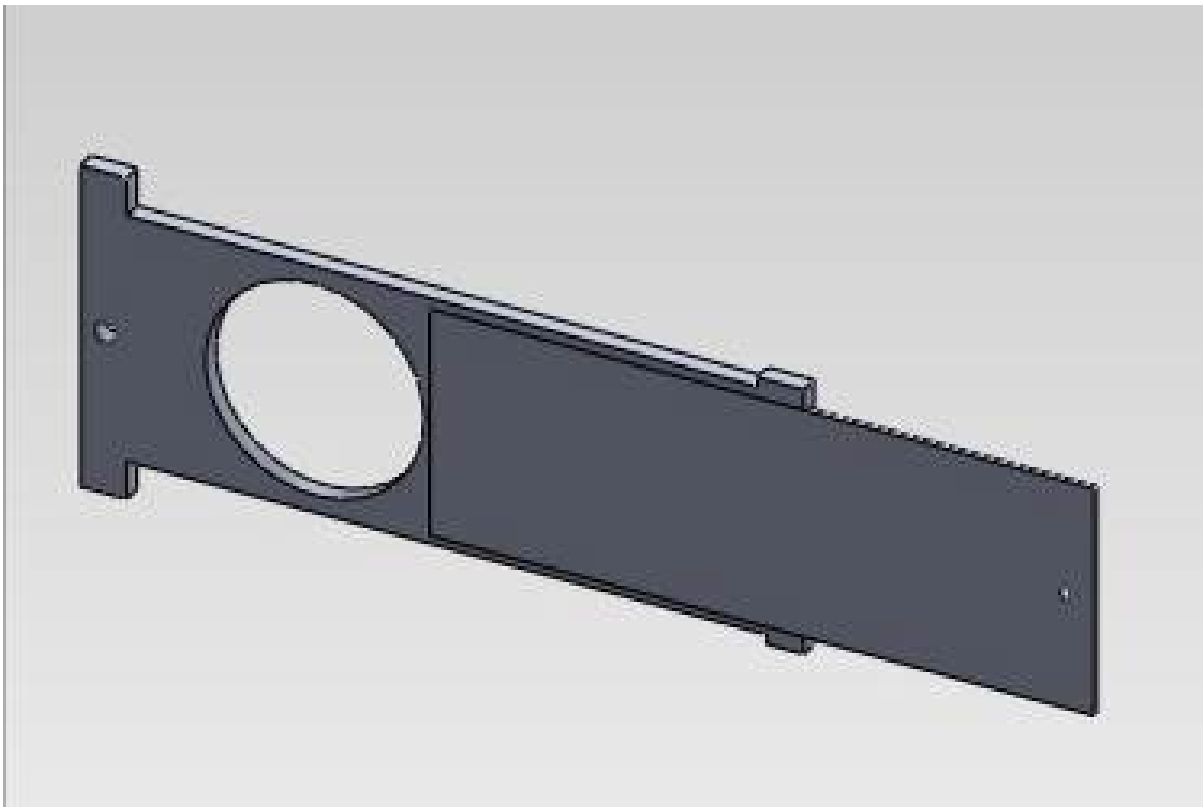

Source: Altex Technologies Corporation

Another method that was considered to prevent jamming was to use multiple pegs, as shown in Figure 13, on the rear side of the gate to intercept the material after the log push-through and prevent the log from interfering with the gate. The development of pegs, operation sequence, sizing, and corresponding changes in the hydraulic control unit were assessed for inclusion in the full-scale BBADS equipment. Figure 14 presents a rendering of the improved gate design that will prevent gate jamming.

Figure 13: Peg Type Gate Jamming Prevention Component

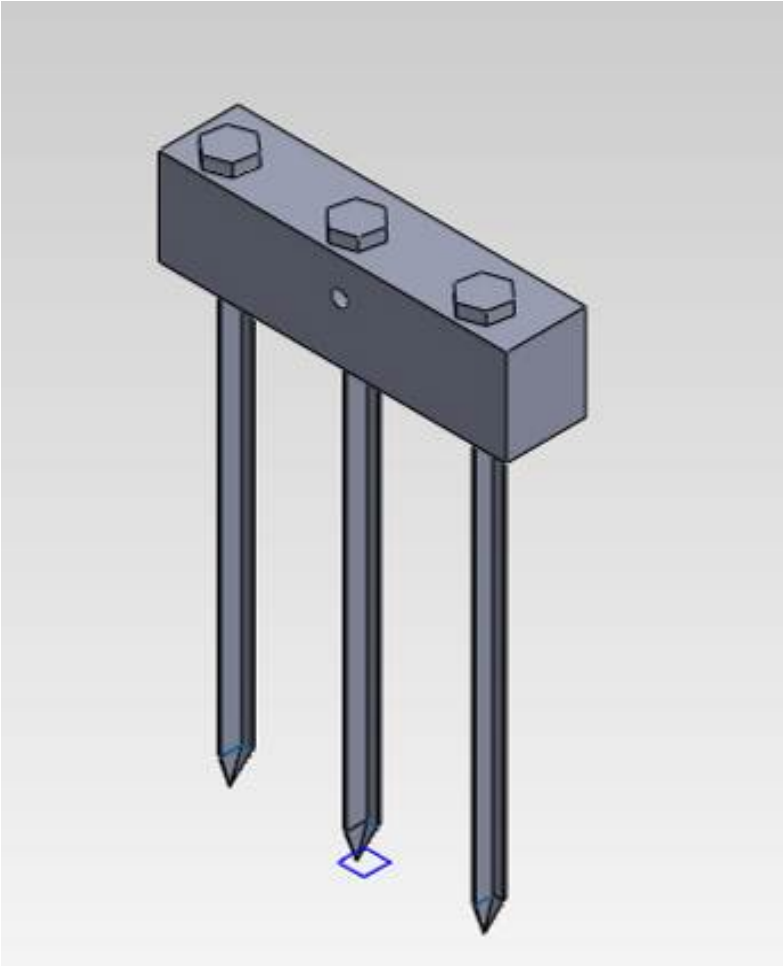

Source: Altex Technologies Corporation

2.2.2 Methods to Prevent Gate Galling

Another important problem observed in gate operation during the pilot-scale testing was the galling of the gate and mating components, due to sliding friction and high loads between the metal gate and frames encasing the gate. Various methods to reduce the galling problems were considered. Roller elements, rather than sliding friction, were also considered to eliminate the galling problem.

Figure 14: Improved Gate Design for Preventing Jamming

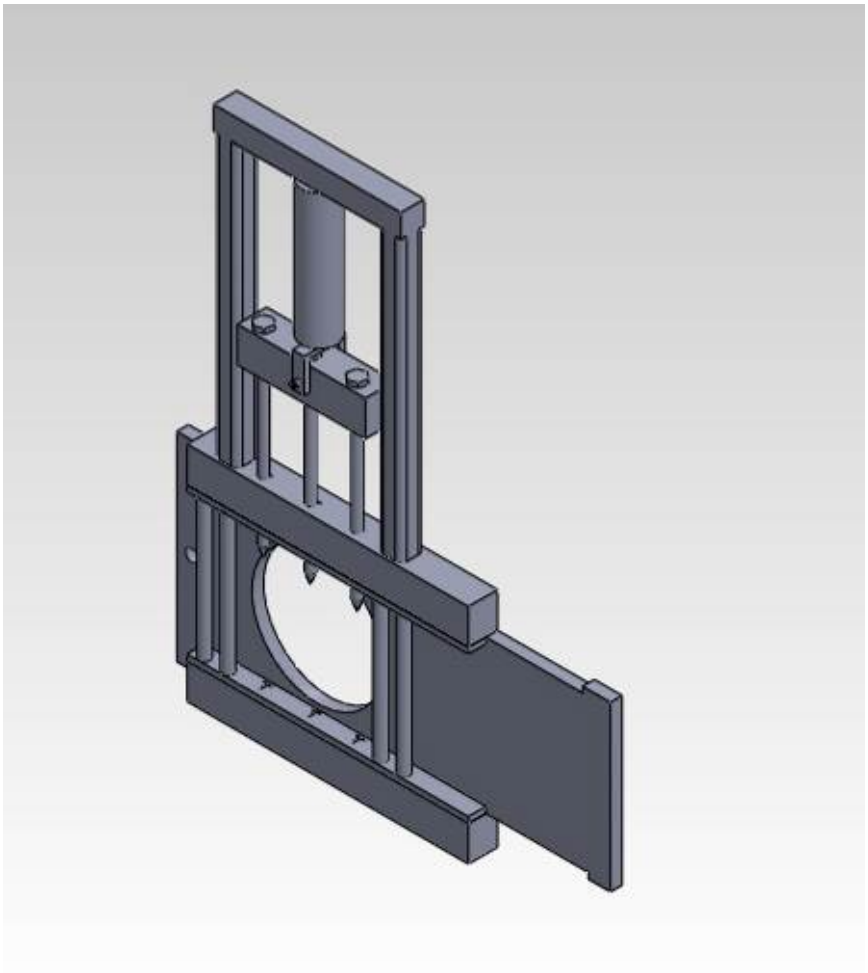

Source: Altex Technologies Corporation

The maximum metal-to-metal pressure conditions in the BBADS gate were reviewed, and it was estimated that the maximum possible surface pressure on the gate was less than 1000 psi (1ksi). The cost and properties of different alloy materials that have threshold galling resistance of over four ksi were reviewed for use in BBADS. The threshold galling stress of Alloy 25 on 4340 steel is 20 ksi and is a good option for fabrication of the gate[8]. The proper heat treatment, stress relieving, and grinding conditions needed to make this component free of galling problems were defined. Also, special gall resistant alloys, such as those manufactured by companies like Waukesha Foundry[9], were also considered for BBADS and assessed for cost and ease of implementation. These materials can address very large surface loads and galling potential versus the more modest BBADS requirements. It was found that the cost of special alloys is very

[8] http://materion.com/~/media/Files/PDFs/Alloy/TechnicalPapers/AP0011-GallingResistanceofAlloy25.pdf.

[9] http://www.waukeshafoundry.com/

high. Therefore, given the BBADS requirements and the need to minimize cost, these expensive alloys were not recommended for use.

The second option considered to support the gate was to install permanent rollers or retractable rollers. The retractable rollers could limit the load imposed on the rollers during the maximum compression stage when the gate is stationary. Various roller designs were reviewed and manufacturers were contacted to determine the availability of rollers having sufficient strength and temperature capability to meet the BBADS need. Although rollers are being made that can support hundreds of tons of force, most of the rollers are made of polymer, which does not have the needed temperature capability. Also, rollers would be subject to dust that could limit durability. Based on these assessments, the sliding gate system with improved materials was considered to be the leading candidate for the gate valve design.

The gate design was analyzed and improved using a Finite Element Analysis (FEA) model that is part of the available SolidWorks design software package. Gate components that have the potential for galling and mechanical failure were analyzed. The models of the gate valve were developed using SolidWorks and the required fixture conditions. Load and pressure conditions were then applied in the model. SolidWorks simulation software includes material properties of all commercially available steel and other alloy materials, and the correct materials were selected for the components. For accurate results, a fine mesh was used.

For the FEA analysis, the maximum force applied on the gate in the closed position, as well as the force applied in a partially open condition, were considered. FEA results for the worst case condition, where the gate is fully closed and a maximum load of 100,000 lbs is applied on the gate, are shown in Figure 15. It can be seen that the deflections are below 0.0037”, which is negligibly small and will not cause any problem for gate operation.

It should be noted that BBADS operation with the gate produces high quality logs but also reduces throughput because of gate activation time. Therefore, the gate is compatible with high value applications, like animal feed densification. For lower value biofuels feedstock and cofire applications, high throughput is essential for economical operation. Operation of the system without the gate activation provides the highest throughput with somewhat lower quality. In this case, the previously compacted logs within the downstream tube provide sufficient resistance to the fresh material compaction to produce good quality logs without gate activation. This shows the flexibility of the BBADS process.

Figure 15: Displacement of Gate with Full Application of 100,000 lbs Force through Pusher Piston

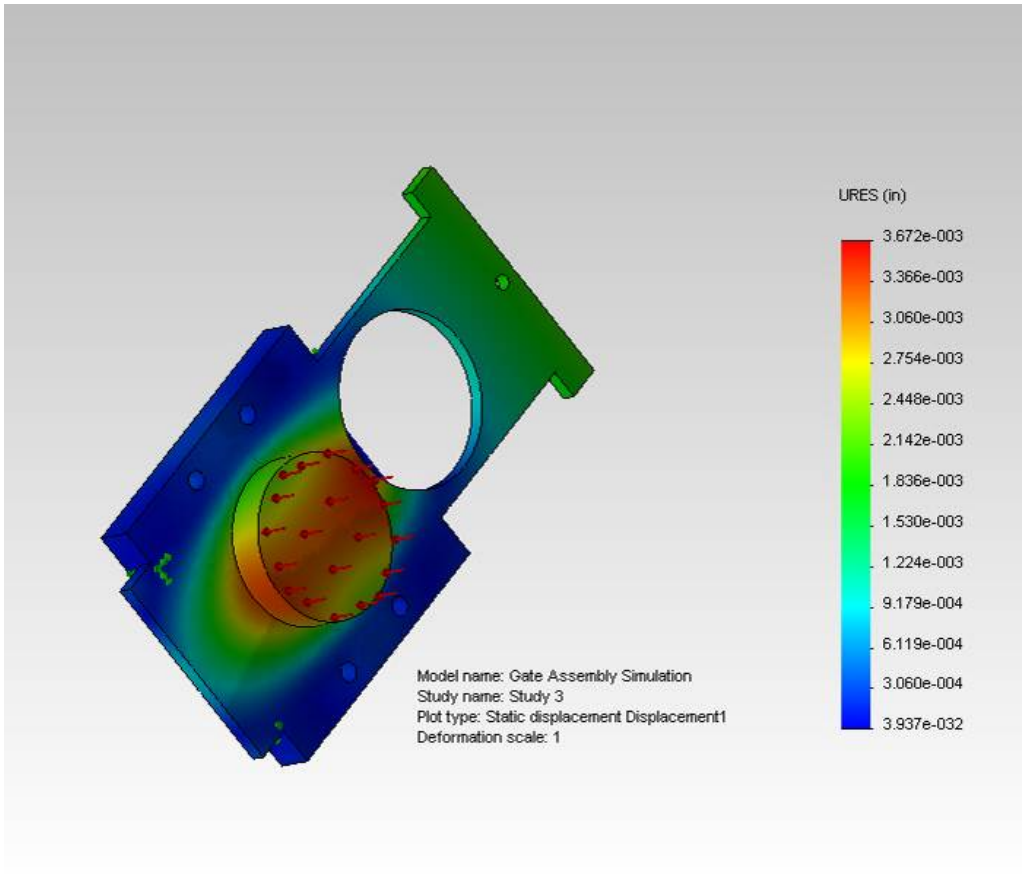

Source: Altex Technologies Corporation

2.3 Heating System Design

In order to achieve binder activation, the biomass heating requirement was estimated to be 110 KW for the commercial scale BBADS machine having a processing capacity of 15,000 tons/year. For demonstration purposes, it was decided to use a propane-based thermal fluid system to heat the biomass because of the supply flexibility of propane fuel in the field. Several commercial oil heating units were considered. It was decided that a standard liquid fuel fired oil heater would be adequate to meet BBADS system biomass heating needs. For an increase by a factor of six in throughput relative to the pilot-scale BBADS demonstrated at UC Davis, the flow rate of oil must be correspondingly increased. Also, to ensure that the heating of the biomass is not limited by the hot oil flowing in the channel surrounding the compression tube and downstream section, the channel fluid velocity and associated heat transfer coefficient were reviewed for the higher throughput demonstration system.

For the pilot-scale BBADS, in order to meet the biomass throughput need of 15 lbs, the rate must be 15 seconds/log and the heating requirement about 380,000 Btu/hour. Hence, a thermal fluid heating system with a capacity of over 400,000 Btu/hour was needed to support the full-scale BBADS. The hot oil system must have a thermal fluid flow rate of 65 gallons/minute and

be able to heat the thermal fluid from 375°F (190.56°C) to 400°F (204.44°C). In order to achieve maximum heat transfer from the thermal fluid to the BBADS heating section, various methods to increase the overall heat transfer coefficient in the heating section were considered. To maximize the heat transfer coefficient, the velocity of thermal fluid inside the jacket must be maintained at 20 feet/second, and the jacket specifications to accomplish this objective are given in Table 4.

Table 4: BBADS Full-Scale Equipment - Heating Section Specifications

Specification	Value
Temperature of oil: in, F	400
Temperature of oil: out, F	375
Thermal fluid heater capacity, Btu/hour	400,000
Flow rate of oil, lbs/hour	26,667
Flow rate of oil, lbs/min	444
Flow rate of oil, gallon/min	65
Flow rate of oil, cu ft/min	8.7
Width of channel, inch	2
Minimum velocity, ft/sec	20
Height of channels, inches	0.5

Source: Altex Technologies Corporation

The pump size needed for oil heating was estimated. For estimation of pressure drop in the heating channels, rectangular 2″ X 0.5″ channels were utilized. Based on these assumptions, pressure drop across the heating section will be 120″ (Table 5) of water. Hence, the hot oil system was fitted with a 2 Horse Power (HP) pump, for circulation of hot oil at the required velocity of 20 ft/sec.

Table 5: BBADS Full-Scale Equipment – Heating Section Oil Pump Specifications

Specification	Value
Length of heating section, inches	48
Number of channels	24
Total length of flow, inches	829
Total length of flow, feet	69.1
Cross sectional area of channel, sq. inch	1.05
Wetted perimeter	5.05
Hydraulic Radius, inches	0.83
Friction factor	0.01941
Pipe Roughness, ft	0.00085
Oil Viscosity, ft2/s	4.2E-04
Reynolds No	3296.5
Head Loss, inches	120.4
Pump HP	1.37

Source: Altex Technologies Corporation

2.4 Cooling System Design

The cooling system installed on the pilot-scale BBADS has a heat removal capacity of about 20 kW. Since the throughput for the demonstration system will be six times that of the pilot-scale system, the cooling capacity has to be increased by six times. The higher the cooling capacity, the closer the final log temperature will be to ambient air temperature and the higher the quality of logs. In order to achieve this cooling requirement with high efficiency and low cost, various cooling methods were reviewed. The level of cooling required for the proper setting of the binder in the biomass depends on the capacity of the cooling system, processing speed of BBADS, thermal transfer rate between the cooling section and coolant, and the ambient air temperature. Based on the recorded temperature during operation of the pilot-scale BBADS and using a standard heat transfer analysis, it was shown that the heat transfer rate in the heating section was in the range of 75 Btu/ft^2-hr°F to 80 Btu/ft^2-hr°F. However, the heat transfer rate in the cooling section was estimated to be only 16 Btu/ft^2-hr°F based on the recorded temperature in the cooling section during testing. This cooling section heat transfer rate is low. In order to increase the heat transfer rate in the cooling section, various options were considered. Based on the review, the following decisions were made:

- Increase the coolant velocity in the cooling section equivalent to the velocity of thermal fluid in the heating section.
- Increase the cooling capacity by at least 10 times in order to reduce the cooling section length.
- Develop the demonstration cooling section as modular units so that the number of cooling sections can be changed based on the biomass material.

It was decided to build the cooling section in two to four sections. To dissipate the heat from the logs into the air, the pilot-scale BBADS system utilized a radiator type dry cooling system. These cooling systems will work well when the outside temperature is less than 80°F (26.67°C).

As the outside temperature increases, the radiator and fan size has to be increased. At very high atmosphere temperature, above 110°F (43.33°C), the cooling system performance will affect the quality of logs produced by the BBADS equipment because of the temperature setting conditions of the inherent binder. In order to overcome this problem for hot climates, evaporatively cooled wet type cooling systems were reviewed for use in BBADS. In this approach, the latent heat of the water allows cooling to the wet bulb temperature limit of the air, which can be significantly below the ambient dry bulb temperature. This can increase cooling to the equivalent of a dry cooling system with 80F dry bulb temperature, if air humidity is low. This would then meet the BBADS cooling requirements under even very high ambient dry bulb temperature conditions.

Evaporative type cooling towers of required size are commercially available at low cost compared to radiator type dry cooling systems. These units require water for operation and the evaporative cooling losses are in the range of 0.5 to 1.5 gallons/minute. However, in many locations, this limited amount of water is readily available. For comparison, the equipment cost and probable operating cost parameters for a dry type cooling system (radiator type cooling system) versus a wet type cooling system (evaporative cooling systems) of similar capacity is given in Table 6. As shown, the wet system is less costly than the dry system, uses a similar horsepower fan, but also requires water to achieve the suppressed temperature needed for extremely hot climates.

Table 6: Comparison of Dry Type and Wet Type CoolingSystems

Item	Dry cooling	Wet cooling
Capacity, btu/hour	150,000	150,000
Cost of equipment, $	2,500	1,942
Quantity of water, gallon/min	0	0.93
Heat transfer fluid	Oil	Water
Fan and pump motor size, HP	1.0	1.0

Source: Altex Technologies Corporation

As an example of a wet type cooling tower, having a cooling capacity of 150,000 Btu/hour, Figure 16 presents a picture of a unit marketed by Cooling Tower Systems (CTS).

Figure 16: Picture of Commercially Available Evaporative Cooling Systems of Required Capacity Cooling Tower Systems

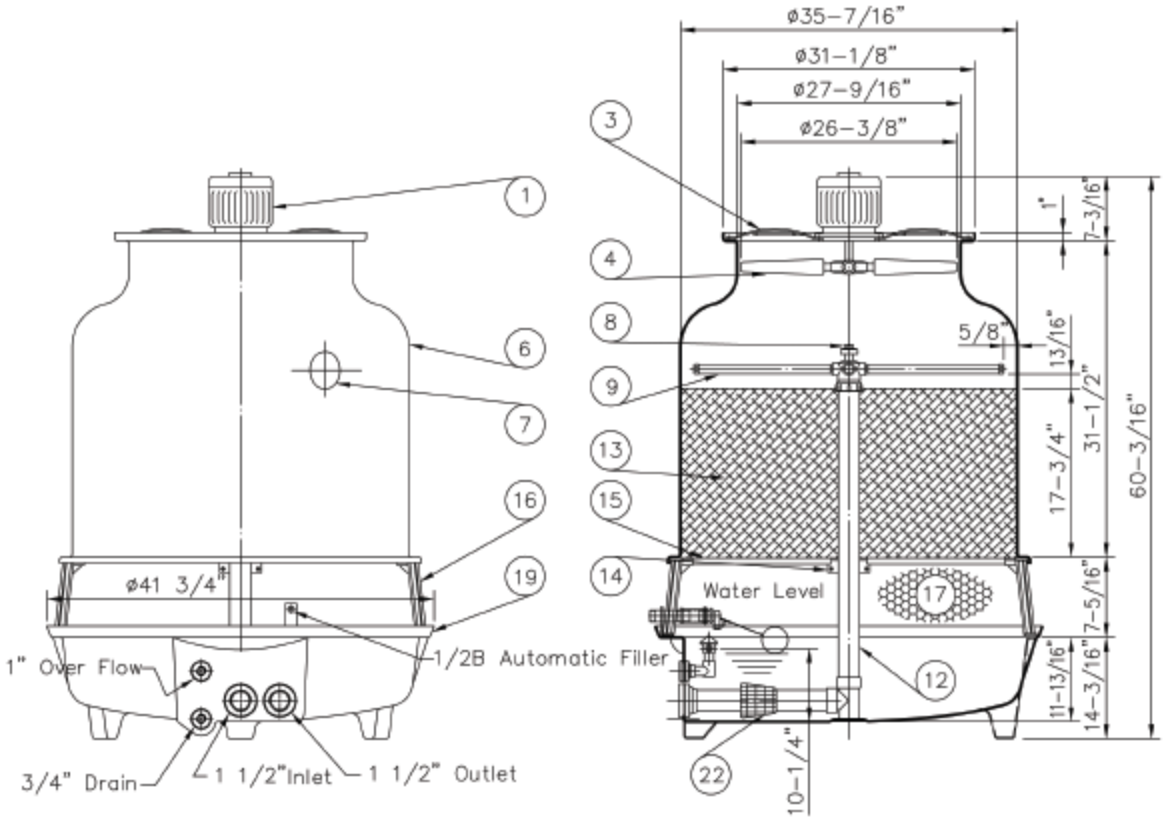

Source: Cooling Tower Systems

The figure shows the general scale of the system, which is compatible with the BBADS field test equipment. The cut view on the right shows the air fan and media on which the circulating water is sprayed. This unit is a direct contact cooler. The unit is fabricated mostly of plastic material for corrosion resistance. The wet cooling system configuration is different and smaller than the dry cooling system. A radiator type dry cooling system is illustrated in Figure 17. This type of system was used in the BBADS pilot-sc*al*e testing.

Figure 17: Picture of Commercially Available Dry Cooling System without Circulating Pump, Coolant Tank, and Frame

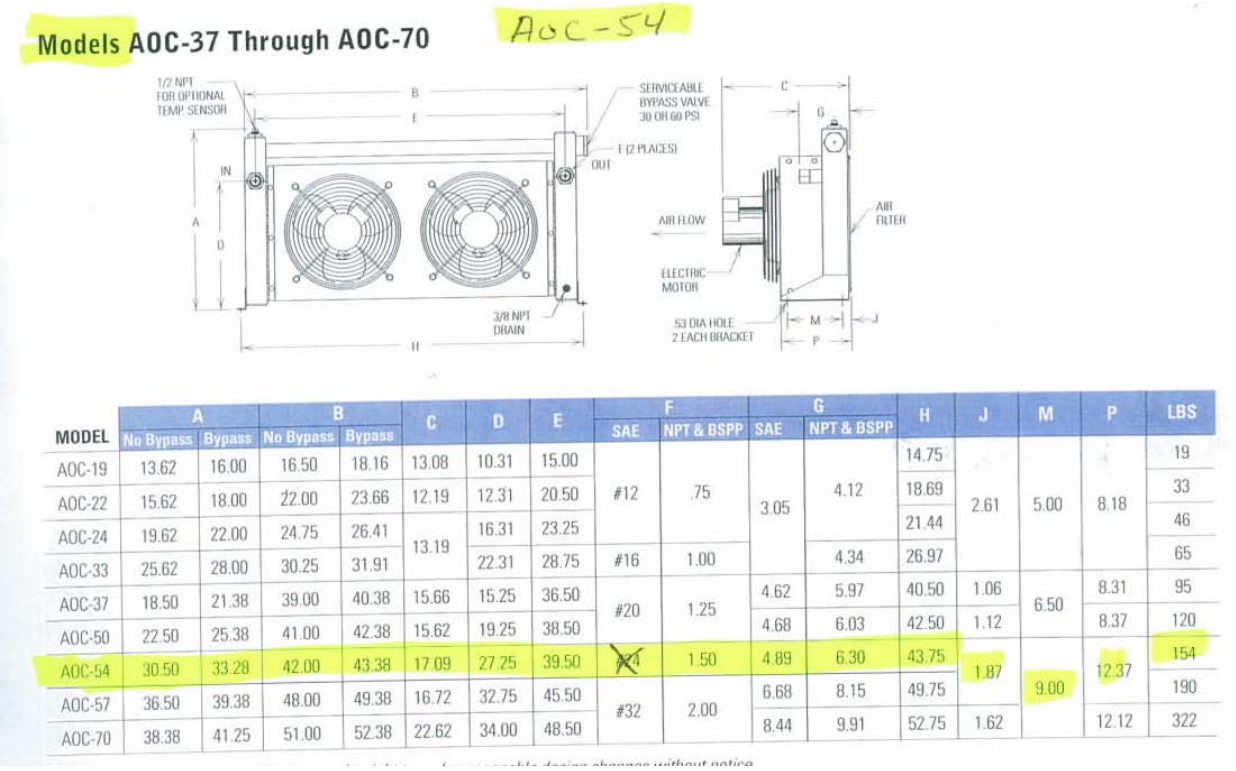

MODEL	A		B		C	D	E	F		G		H	J	M	P	LBS
	No Bypass	Bypass	No Bypass	Bypass				SAE	NPT & BSPP	SAE	NPT & BSPP					
AOC-19	13.62	16.00	16.50	18.16	13.08	10.31	15.00	#12	.75	3.05	4.12	14.75	2.61	5.00	8.18	19
AOC-22	15.62	18.00	22.00	23.66	12.19	12.31	20.50					18.69				33
AOC-24	19.62	22.00	24.75	26.41	13.19	16.31	23.25					21.44				46
AOC-33	25.62	28.00	30.25	31.91		22.31	28.75	#16	1.00		4.34	26.97				65
AOC-37	18.50	21.38	39.00	40.38	15.66	15.25	36.50	#20	1.25	4.62	5.97	40.50	1.06	6.50	8.31	95
AOC-50	22.50	25.38	41.00	42.38	15.62	19.25	38.50			4.68	6.03	42.50	1.12		8.37	120
AOC-54	30.50	33.28	42.00	43.38	17.09	27.25	39.50	#24	1.50	4.89	6.30	43.75	1.87	9.00	12.37	154
AOC-57	36.50	39.38	48.00	49.38	16.72	32.75	45.50	#32	2.00	6.68	8.15	49.75				190
AOC-70	38.38	41.25	51.00	52.38	22.62	34.00	48.50			8.44	9.91	52.75	1.62		12.12	322

Source: Southwest Thermal Technology, Inc.

In order to achieve maximum heat transfer in the cooling section, the velocity of thermal fluid flow in the cooling jacket has to be maintained at 20 ft/sec. The cooling jacket was designed based on the coolant flow rates and specifications for the planned Model T20 of CTS evaporative cooling tower; the specifications are given in Table 7. The pump sizes needed for the cooling sections were estimated. For estimation of pressure drop in the cooling channels, a rectangular 1.9″ and 0.25″ channel in the cooling section was used. Based on these assumptions, pressure drop across the cooling section was estimated at of 820″ (Table 7) of water. Hence, a 5 HP pump will be used in the cooling system for circulation of the cooling fluid at the required velocity.

Table 7: BBADS Full-Scale Equipment - Cooling Section Specifications

BBADS Full Scale Equipment - Cooling section design	
Temperature of cooling water in, °F	80
Temperature of cooling water out, °F	110
Evaporative cooling system capacity, Btu/hour	432,000
Flow rate of water, lbs/hour	14,400
Flow rate water, lbs/min	240
Flow rate of water, gallon/min	30
Flow rate of water, cu ft/min	4.0
Width of channel, inch	1.9
Minimum velocity, ft/sec	20
Height of channels, inches	0.25
Length of heating section, inches	108
Number of channels	56.8
Total length of flow, inches	1964
Total length of flow, feet	163.7
Cross sectional area of channel, sq. inches	0.48
Wetted perimeter, inches	4.31
Hydraulic Radius, inches	0.45
Friction factor	0.03
Pipe Roughness, ft	0.00015
Water Viscosity, ft^2/s	8.3E-06
Reynolds No	89865.7
Relative roughness	0.00403
Head Loss, inches	818.9
Pump HP	4.29

Source: Altex Technologies Corporation

2.5 Hydraulic System and Controls Design

The existing control system used in the pilot-scale equipment was reviewed to identify control upgrades to support the BBADS demonstration equipment. This upgrade was needed to integrate all control functions and make the BBADS demonstration and commercial system operation simple and reliable.

The control system used to operate the pilot-scale BBADS hydraulic system used relays and switches to control the operation of pusher, gate, and feed door[1]. In addition, the hydraulic system, heating system, and cooling system were operated independently of each other. In order to improve operability of the BBADS demonstration equipment, and subsequent commercial equipment, it was decided to incorporate Programmable Logic Controller based controls into the system that enable the BBADS to operate as an integrated unit. In addition to the control points needed to operate the BBADS equipment and to control the log quality, the controls needed to achieve the startup and shutdown sequence were also reviewed.

The full scale BBADS equipment operation and log quality control can be achieved using eight position control switches, six temperature sensing and control points for the heating system,

two temperature sensing and control points for the cooling system, and another three pressure sensing and control points. In support of the sensor and controls update, an Altex controls engineer reviewed the needs. Also, inputs were obtained from West Coast Fluid Power on the best way to implement integrated controls for their hydraulic system design. Dave Williams of West Coast Fluid Power, who was the hydraulic system engineer and vendor for the pilot-scale BBADS equipment, was contacted, and new requirements for the full scale BBADS hydraulic system were described. Based on these inputs, hydraulic circuits and control system design were prepared.

The hydraulic system for the full-scale BBADS equipment has two power units, as illustrated in the Process Flow Diagram given in Figure 18. The larger power unit, fitted with a 30 HP electric motor, will drive the biomass pusher, gate, shovel, fork, and feeder door. Another smaller power unit fitted with a 20 HP electric motor drives two low speed and high torque hydraulic motors to be integrated with the bale conveyor and bale breaker mechanism motors. This will allow the operation of BBADS compaction equipment independent of biomass feeder operations.

Figure 18: BBADS Process Flow Diagram

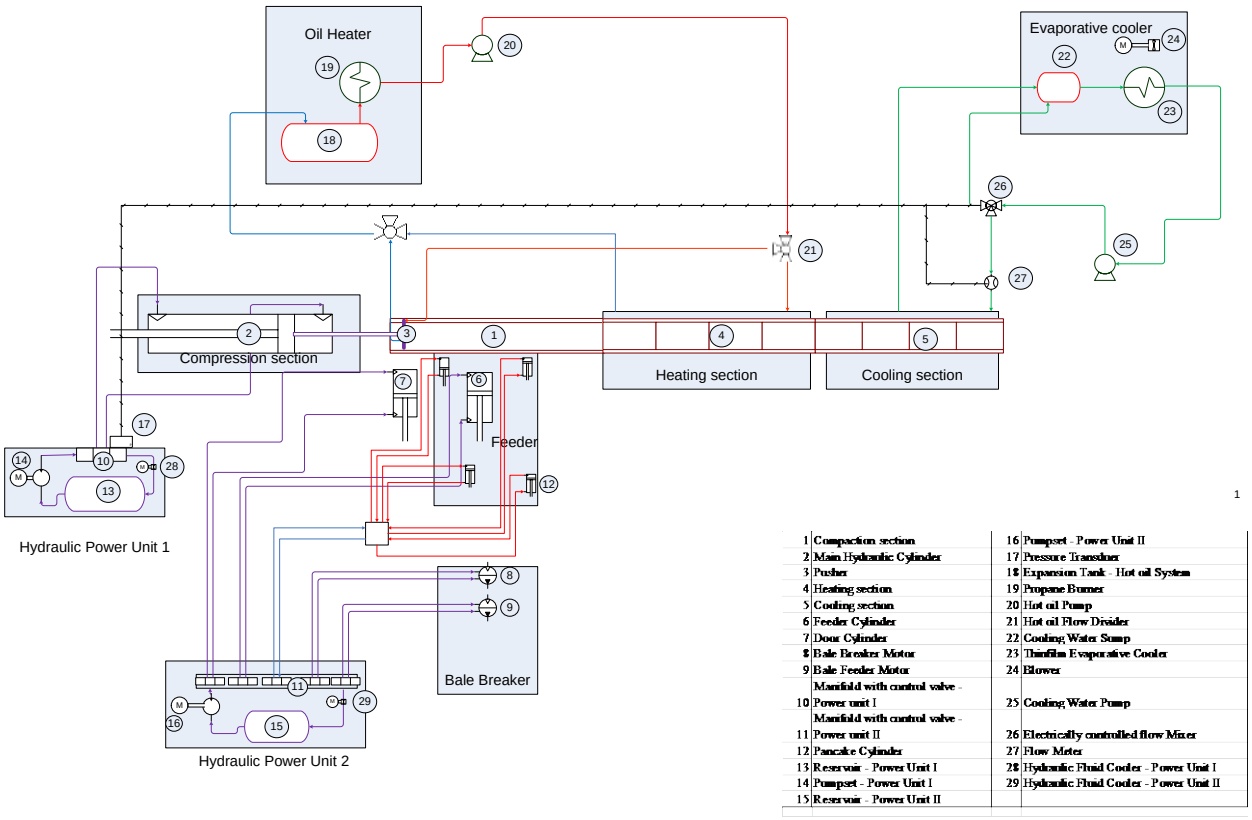

Source: Altex Technologies Corporation

As an example, two hydraulic circuit diagrams developed for the operation of two motors and the additional actuators in the full-scale BBADS equipment are shown in Figure 19. The circuit on the left shows the hydraulic circuit diagram for the power unit and the two motors. The circuit diagram on the right shows the hydraulic circuit for operation of the shovel and feeder door of the full-scale BBADS equipment.

Figure 19: Hydraulic Circuit for Bale Breaker (left) and Two Additional Actuators in the BBADS Equipment(right)

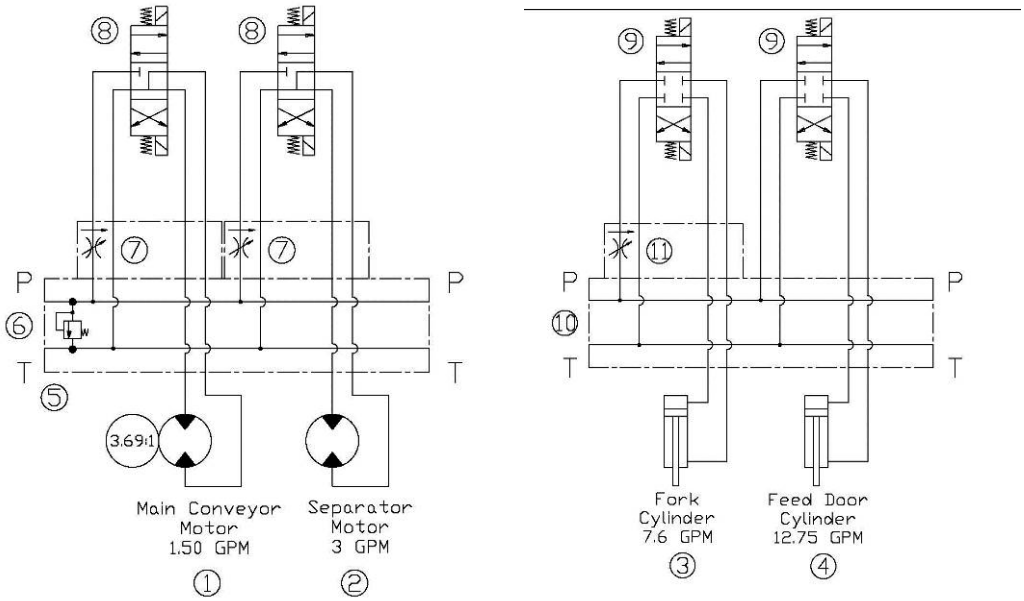

Source: Altex Technologies Corporation

2.6 FMEA Analysis

In order to develop a robust BBADS system with maximum safety and reliability, a Failure Mode and Effect Analysis (FMEA) was carried out as per Military Standard: MIL-STD-1629A. Establishing an FMEA early on will enable a continuous improvement in the system design and the product at selected stages of development. This will lead to the development of a robust BBADS system with minimal probability of component failure. Also, this process will help produce a machine that produces a high quality product. The functional block diagram of the full-scale BBADS system FMEA is given in Figure 20.

Figure 20: Functional Block Diagram for the Full-Scale BBADS Equipment

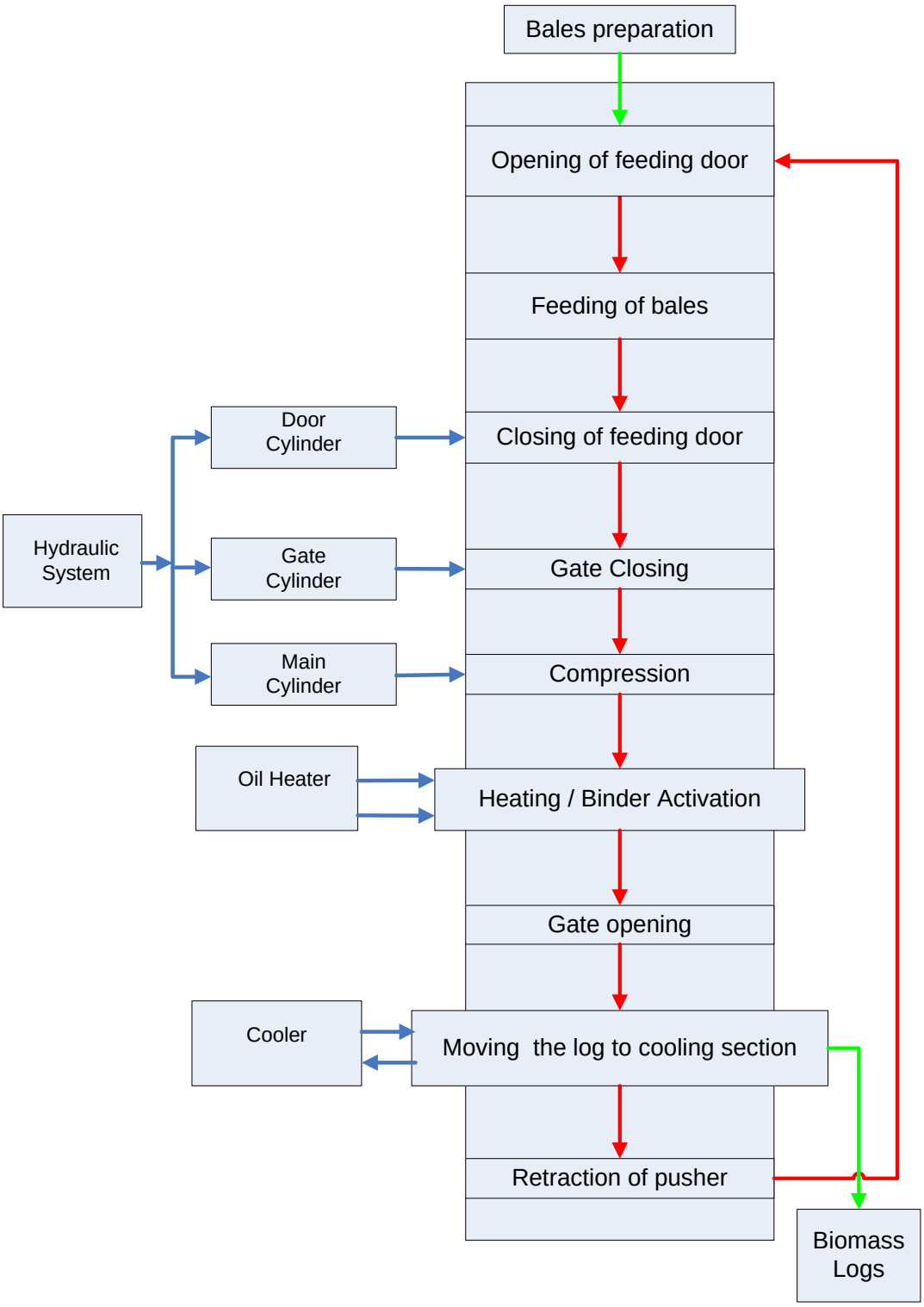

Source: Altex Technologies Corporation

The system level FMEA was carried out based on the experience gained during the development, fabrication, and operation of the pilot-scale BBADS equipment at Altex and at UC Davis. Internal meetings were held at Altex to define key process steps/components and possible failure modes. In this process, 10 important features, which have potential for failure, were identified. After identification and listing of the key features, the possible failure modes for each feature were discussed. Each step was ranked for its severity, occurrence, and detection on a scale of 1 to 10. The ranking table for severity of each failure mode is given in Table 8. In addition, the ranking tables for occurrence and detection are given in Table 9 and Table 10, respectively. The Severity, Occurrence and Detection (SOD) ranking numbers for BBADS were then used to calculate the Risk Priority Number (RPN). The RPN is a numeric score for the likelihood that a particular failure can occur and go undetected during production of densified product, and the amount of damage that the failure can cause to the BBADS equipment, or the personnel, during operation. These results are given in Table 11. In addition to ranking the 10 different failure modes, the controls that need to be implemented to prevent the failure were also identified. This first FMEA analysis, carried out at the design stage, will serve as a base for subsequent FMEA update analyses. These updates will result in continuous equipment performance and final product quality improvements.

Table: 8 Severity Ranking Table

Effect	Criteria: Severity of Effect Defined	Ranking
Hazardous: Without Warning	May endanger operator. Failure mode affects safe BBADS equipment operation and / or involves noncompliance with EPA and other government regulation. Failure will occur **WITHOUT** warning.	10
Hazardous: With Warning	May endanger operator. Failure mode affects safe BBADS equipment operation and / or involves noncompliance with EPA and other government regulation. Failure will occur **WITH** warning.	9
Very High	Major disruption to production line. 100% of product may have to be sold at lowest grade. Customer very dissatisfied.	8
High	Minor disruption to production line. Product may have to be sorted and a portion (less than 100%) has to be sold in lower grade. BBADS equipment operable, but at a reduced level of performance. Customer dissatisfied.	7
Moderate	Minor disruption to production line. A portion (less than 100%) may have to be graded and have to be sold at lower grade. BBADS equipment operable, but some comfort / convenience item(s) inoperable. Customers experience discomfort.	6
Low	Minor disruption to production line. 100% of product may have to be sold at lower grade. BBADS equipment operable, but some comfort / convenience item(s) operable at reduced level of performance. Customer experiences some dissatisfaction.	5
Very Low	Minor disruption to production line. The product may have to be sorted and a portion (less than 100%) has to be sold at a lower grade. Defect noticed by most customers.	4
Very Minor	Minor disruption to production line. A portion (less than 100%) of the product may have to be The product may have to be sorted and a portion (less than 100%) has to be sold at a lower grade. Defect noticed by discriminating customers.	2
None	No effect.	1

Source: Altex Technologies Corporation

Table: 9 Occurrence Ranking Table

Probability of Failure	Possible Failure Rates	Cpk	Ranking
Very High:	1 in 2	< 0.33	10
Failure is almost inevitable	1 in 3	0.33	9
High: Generally associated with processes similar to previous	1 in 8	0.51	8
processes that have often failed	1 in 20	0.67	7
Moderate: Generally associated with processes similar to	1 in 80	0.83	6
previous processes which have	1 in 400	1	5
experienced occasional failures, but not in major proportions	1 in 2,000	1.17	4
Low: Isolated failures associated with similar processes	1 in 15,000	1.33	3
Very Low: Only isolated failures associated with almost identical processes	1 in 150,000	1.5	2
Remote: Failure is unlikely. No failures ever associated with almost identical processes	1 in 1,500,000	1.67	1

Source: Altex Technologies Corporation

Table: 10 Detection Level Ranking Table

Detection	Criteria: Likelihood the existence of a defect will be detected by test content before product advances to next or subsequent process	Ranking
Almost Impossible	No known control(s) available to detect failure mode	10
Very Remote	Test content must detect 60 % of failures	9
Remote	Test content must detect 65 % of failures	8
Very Low	Test content must detect 70 % of failures	7
Low	Test content must detect 75 % of failures	6
Moderate	Test content must detect 80 % of failures	5
Moderately High	Test content must detect 85 % of failures	4
High	Test content must detect 90 % of failures	3
Very High	Test content must detect 95 % of failures	2
Almost Certain	Test content must detect 99.5 % of failures	1

Source: Altex Technologies Corporation

RPN for the 10 failure modes identified for BBADS equipment are given in Table 11. The RPN is calculated as severity factor times occurrence factor times detection factor. The maximum RPN of 168 was defined for gate operation and the lowest RPN of 32 was defined for feeding system operation. Component designs having an RPN of over 70 will be continuously improved to minimize the probability of failure and maximize operating efficiency.

Table: 11 Potential Failure Modes Identified for Full-Scale BBADS Equipment

Sl. No.	Potential Failure Modes	RPN
1	Incorrect orientation of bale feeding	48
2	Door not closing, and door twist	72
3	Bending and mechanical failure due to compressive and lateral stress	32
4	Jamming of gate, gate cylinder failure,	168
5	Excess temperature, low temperature, oil leaks	162
6	High coolant temperature (>40°C), oil leaks	96
7	1) Over heating of hydraulic fluid (2) Insufficient force in the pusher (3) incorrect operation of gate through spring back (4) Not closing of door	144
8	Failure of limit switches installed in the BBADS equipments and valves in the hydraulic system	72
9	Failure of thermocouples, breakdown in the thermal fluid circulating lines and electronic control failure	81
10	Blockage of fluid circulating lines, mixing of debris along with cooling fluid and pressure buildup in the system	144

Source: Altex Technologies Corporation

As noted in Table 11, a relatively high RPN is given for jamming of the gate that separates the compaction zone from the downstream heating and cooling zones. As noted above, the pilot-scale gate design was reviewed and a number of refinements were recommended to reduce failure modes and risks. In particular, several solutions to gate blockage from biomass spring back were considered, with the "peg" barrier approach considered as the best solution. Analysis showed that the "peg" barrier could be designed and fabricated to prevent spring back and operate reliably without mechanical failure. This analysis did not cover hydraulic cylinder failure. Given the relatively low force required to activate or retract the "peg" barrier, it was concluded that the hydraulic mechanism could operate reliably over the long term based on the use of well-proven and reliable hydraulic system components utilized in similar applications. While gate improvement was of interest for high-value animal feed applications, operation without gate activation was emphasized in testing due to the lower risk and the higher throughput without gate operation, as noted above. Another area of high RPN is temperature control of the hot oil system and oil leaks. To address this concern, the hot heating system uses a well-proven hot oil generator that has a simple oil temperature sensor and control system that turns the burner on-and-off to meet the required oil temperature for BBADS heating. The simple and robust proven system reduces risk. Also, from pilot-scale testing, it was determined that the log product quality is not very sensitive to oil temperature, with oil temperature variations of

10°F (-12.22°C) being acceptable. Therefore, the simple and robust oil heater should be adequate to control product risks associated with heating temperature control. Oil leaks are an issue, but the use of proven connectors and correct specification and proven hoses should reduce the risk of oil leaks. Since the full-scale tests will have an operator and assistants available, the system will be continually inspected for oil leaks and corrective action taken. As noted in Table 11, the hydraulic system RPN is relatively high. However, by using an expert hydraulics consultant to help design and spec the system, and through use of proven and reliable hydraulic system components, the hydraulic system risks should be manageable. Lastly, blockage of cooling fluid lines has a relatively high RPN. To address this risk, the coolant fluid will be filtered ahead of the smaller flow passages to avoid solids buildup and excessive pressure drop. By taking the above noted steps, risks are reduced and the project proceeded at acceptable risk.

CHAPTER 3:
Test System Fabrication and Subsystem Tests

The full-scale BBADS system is comprised four subsystems: feeding, compressing, heating, and cooling. For fabrication of BBADS equipment, the commercially available systems including thermal fluid heater, evaporative cooling system, and other hydraulic components were purchased from commercial vendors. Design-specific components and subsystems were fabricated at two different machine shops located in the San Francisco Bay Area, CA. These custom fabricated components were installed in different subsystems and tested for functional performance. After fabrication and installation of the subsystems, they were integrated into the BBADS system for testing and demonstration.

3.1 Fabrication and Test of Round to Square Log Transition Section

In the pilot-scale BBADS equipment, cylindrical logs were made using six different materials. Square logs can be better packed during storage and transport than round logs. Also, square logs can be stacked for the purpose of constructing building walls while round logs have stacking limitations. Lastly, for the high value animal feed application, small square cross section logs would be a useful configuration. Therefore, it was of interest to determine the feasibility of transitioning the compacted round logs to a square format in the heating section where the material is still soft. Hence, a round to square transition section was fabricated and tested. To test the effect of transitioning from round to square log cross-section, a section that connects to the existing pilot-scale BBADS densification equipment was fabricated. The cooling section of the pilot-scale BBADS densification equipment was replaced by this transition section. The "SolidWorks" model of the transition section is shown in Figure 21. Manufacturing drawings of the model were prepared and quotes were obtained from two fabricators: Huffman's Welding Works, 164 Jefferson Drive, Menlo Park, CA 94025 and Nunez Precision Welding, 1820 Houret Court, Milpitas, CA 95035. Based on the quotations, Huffman's Welding Works was selected for fabrication of the transition section.

Figure 21: Solidworks Model of Round to Square Transition Section

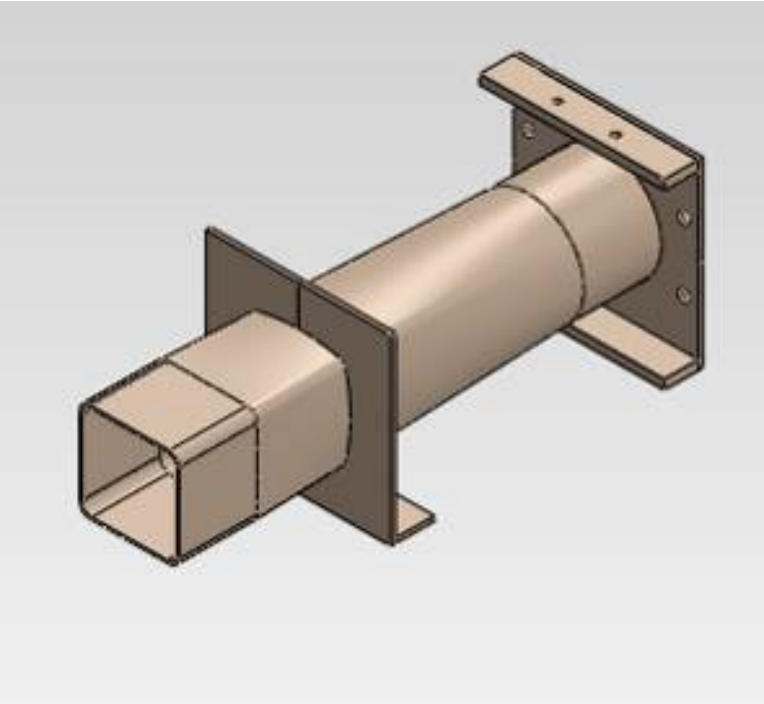

Source: Altex Technologies Corporation

The picture of the fabricated section is given in Figure 22.

Figure 22: Picture of Round to Square Transition Section Fabricated as per Solidworks Model

Photo Source: Altex Technologies Corporation

In the pilot-scale BBADS densification equipment, the cooling section was replaced with the transition section. Figure 23 shows a picture of the installed transition section in the BBADS

densification system. The changes needed in the hydraulic systems, heating system, and the corresponding controls were installed and tested for proper operation. Bales of different biomass materials were obtained from UC Davis and tested to study the effect of a shift from round to square log format.

Figure 23: Picture of Round to Square Transition Section after Installation in the Pilot-Scale BBADS Equipment for Testing

Photo Source: Altex Technologies Corporation

For testing, wheat straw bales of size 11″ X 9″ X 22″ were used as a raw feed. These bales have a different density than the loose biomass material used during testing of the pilot-scale BBADS densification equipment. The salient observations from the testing are:

Loose lignocellulosic materials are better at conforming to the required tube shape than bales. With preformed rectangular bales, the lignocellulosic materials do not conform to the tube shape through expansion (Figure 24 shows corner gaps) but only through compression. This can leave gaps, depending on the bale versus tube dimensions.

- After setting of the inherent binder through temperature reduction of the compressed biomass in the cooling zone, it is almost impossible to force the logs out of the machine through the transition section where the shape changes. This shows the strength of the logs. However, it also highlights that if the machine goes down during log production, the logs would have to be manually cleared from the machine before they cool and become difficult to remove.
- Presence of air in the corner gaps in the heating section, due to non-conformance of the biomass to the tube wall, can lead to oxidation of biomass materials that will degrade the log quality.

Based on these results, it is concluded that the round to square log transition, while feasible, has some significant disadvantages that support maintaining the round log configuration. While square logs are easier to stack for dense packing in storage and transport, as well as for use as a building material, the better quality round logs support the use of a round log final configuration for the full-scale system.

Figure 24: Testing of Round to Square Transition Section

Photo Source: Altex Technologies Corporation

3.2 Fabrication of Test System for Assessment of Activation Energy

An important objective for this project was to increase the throughput by a factor of six relative to the pilot-scale equipment. This was accomplished by expanding the heating section while maintaining compaction time at the same level as that used in the pilot-scale tests. In order to confirm the size of the thermal fluid heating system needed to operate the full-scale BBADS equipment, the pilot-scale system with a simulated full-scale heating system was developed and tested. This was accomplished by combining the heating and cooling section of the pilot-scale BBADS equipment to operate as just a heating section. The cooling system was connected to the BBADS hot oil equipment, as shown in Figure 25. New oil flow lines and five gate valves were incorporated in the hot oil flow system to accomplish the following:

- Heat the biomass in the heating section in front of gate.
- Heat the biomass in the entire jacketed section of the BBADS equipment.
- After heating, cool the biomass in the jacketed section by switching from hot thermal fluid to the cool fluid from the cooling system.

Figure 25: Modifications and Testing of Simulated Full-Scale Activation Section

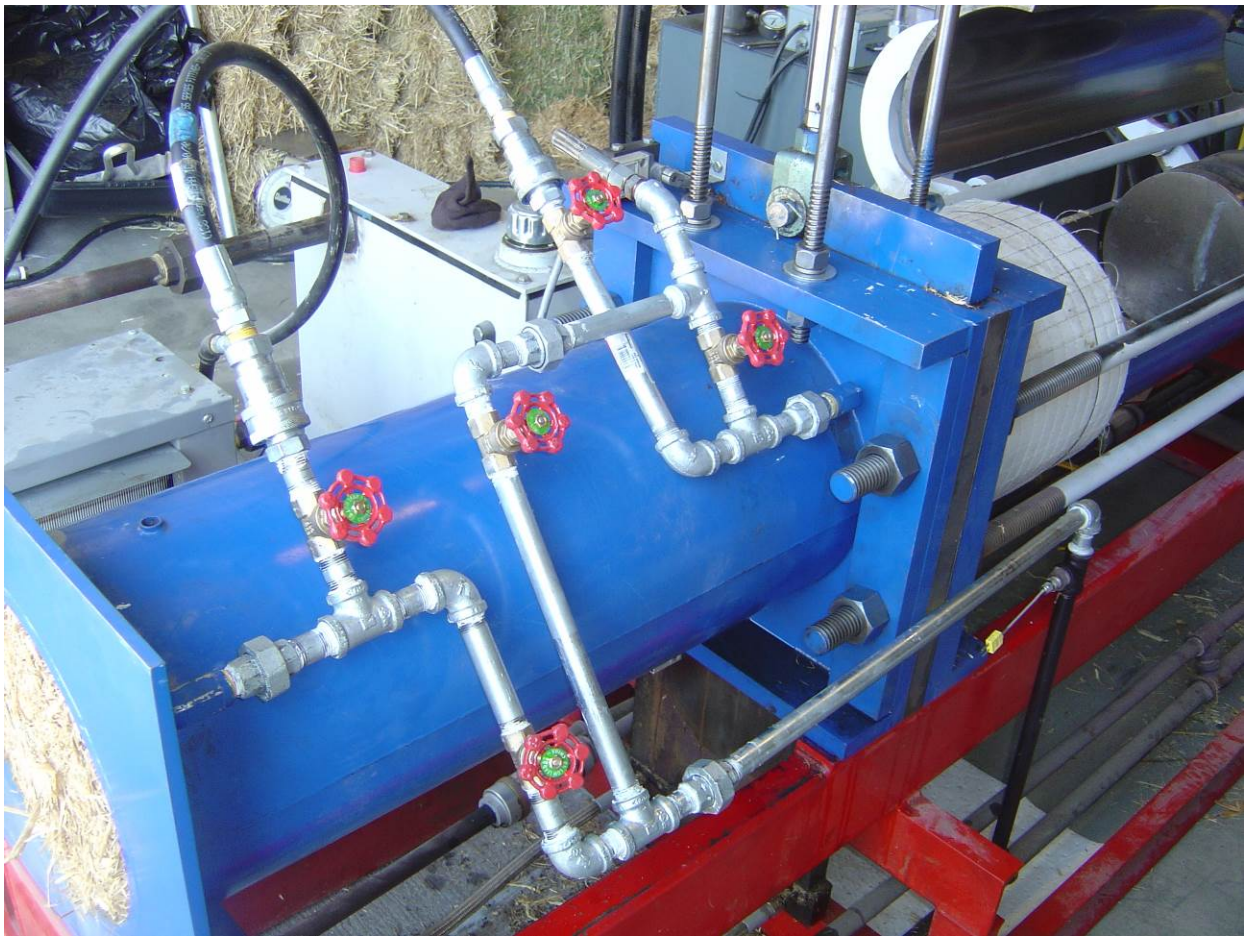

Photo Source: Altex Technologies Corporation

After installation of the new components, tests were carried out using the biomass bales obtained from UC Davis. Heating and cooling times were found to be a good approximation of the full-scale BBADS equipment. The test results were used to determine the total energy requirement.

The pilot-scale BBADS equipment tested at UC Davis has a binder activation time of 90 seconds. In the full-scale BBADS system, the binder activation time will be reduced to 15 seconds ahead of the gate. This will increase the throughput capacity of the full-scale BBADS equipment by a factor of 6 versus a similar diameter pilot-scale system. In order to show the potential of this scale-up, tests were carried out using the available BBADS densification equipment. In the modified set-up, the cooling section is operated to act as both the activation zone during heating and binder setting zone during cooling. This was achieved using the new valves installed in the thermal and cooling fluid lines as shown in Figure 25. A set of logs made using the simulated conditions with a cycle time of 38 seconds is shown in Figure 26.

Figure 26: Logs Prepared in the BBADS Equipment with Higher Throughput Test

Photo Source: Altex Technologies Corporation

Some of the important test observations are given below:

- Through the modification carried out in the BBADS densification equipment, the cycle time could be reduced from 90 seconds to 38 seconds, and still produce good logs without any changes in the hydraulic system. Hence, it was concluded that it is possible to reduce the cycle time to 15 seconds just by increasing hydraulic pump size and without any changes to the hydraulic circuit design for the full-scale BBADS densification equipment.
- In the pilot-scale equipment tested at UC Davis, the binder activation was achieved by keeping the biomass compacted in one location in front of the gate. However, in the simulated tests, binder activation was achieved by continuously moving the biomass into the long activation zone downstream of the gate. The previously formed logs in the long downstream section provided some back force to keep the logs in compression while being heated in the downstream section. The total heating and activation time remained at 90 seconds, as in the case of successful pilot-scale testing. The logs produced in the simulated tests have shown that this change, for high throughput operation, has not affected the quality of logs.
- The total drop in thermal fluid temperature between the inlet and outlet of the binder activation zone was observed to be less than 10°F (-12.22°C) for the pilot-scale system. An average thermal fluid temperature was maintained at 395°F (201.67°C) in the case of the pilot-scale BBADS testing using a thermal fluid heater of 20 kW capacity. In the simulated full scale conditions, the total drop in temperature was observed to be 40°F (4.44°C) using the same thermal fluid heater. Hence, from energy balance considerations, it was concluded that the designed thermal fluid heater capacity of 150

kW capacity, planned for use in the full-scale equipment will maintain temperature differences between the inlet and outlet of the activation zone within 10°F (-12.22°C), and the entire surface of the activation zone will be at a uniform temperature of 395°F (201.67°C).

- The log density produced in the simulated tests is lower than that produced in the pilot-scale testing. In simulated testing, the system does not develop back pressure on the compacted logs when they are pushed beyond the gate. This is due to utilization of the entire section as a heating section without the cooling that sets the binder and produces greater friction between the logs and tube wall. However, attaching a sufficiently long cooling section, as planned, will ensure that there will be sufficient binder setting and back pressure, and the log density will be similar to the logs produced in pilot-scale testing.

3.3 Fabrication of Cooling Section

Based on various tests carried out, such as transitioning from round to square, and the test results presented above, it was concluded that the best final product format will be cylindrical logs consistent with earlier tests. Hence, all the SolidWorks models consider only round tube sections. The cooling system was developed as separate modular units. SolidWorks models were used to develop manufacturing drawings for the fabrication of the cooling sections.

In the pilot-scale BBADS equipment, oil was used as the coolant and a dry cooling system was used to dissipate heat from the coolant. Although this cooling method, which is constrained by the ambient dry bulb temperature, was proven in the pilot-scale system, this may not be applicable to all seasons and regions in California and the United States. To increase cooling performance and temperature margin, it was decided to use an evaporatively cooled system in the full-scale BBADS equipment. Since water is used as a coolant, the cooling system of the full-scale BBADS was fabricated using stainless steel. The exploded view of one cooling section is shown in Figure 27. Fabrication drawings were prepared using the models, and the sections were fabricated by Nunez Precision Welding Inc.

Figure 27: Exploded View of One Cooling Section Showing Details of Oil Flow Lines

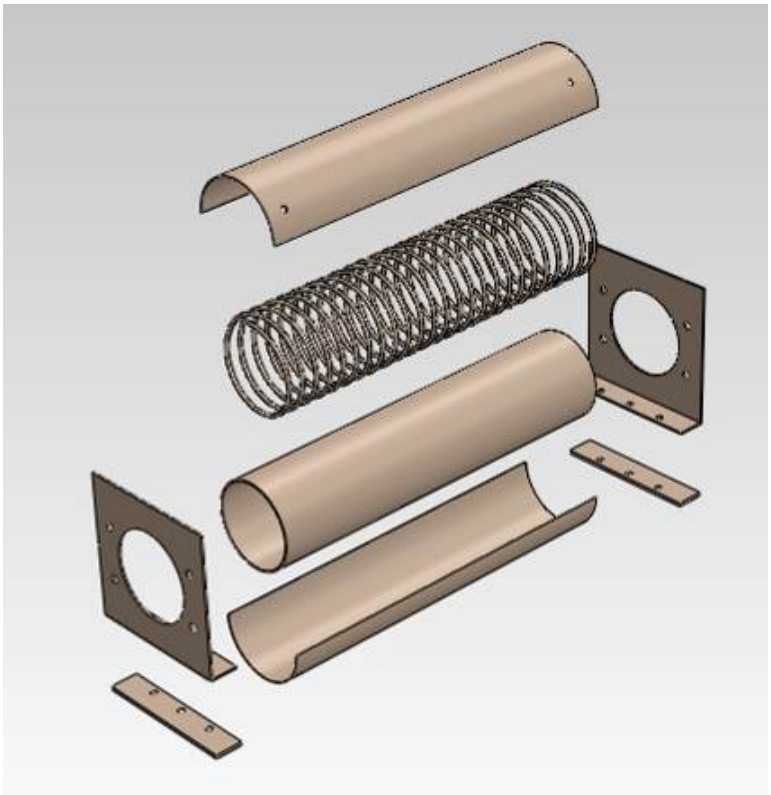

Source: Altex Technologies Corporation

Figure 28 shows the model of the modular cooling section frame. In the pilot-scale BBADS equipment, the frame was fabricated using rectangular tubes and C sections with ¼″ thickness. However, in the full-scale BBADS system, the thickness is reduced to 3/8″ thickness, to reduce weight for improved ease of transport.

Figure 28: Frame of Modular Cooling Section

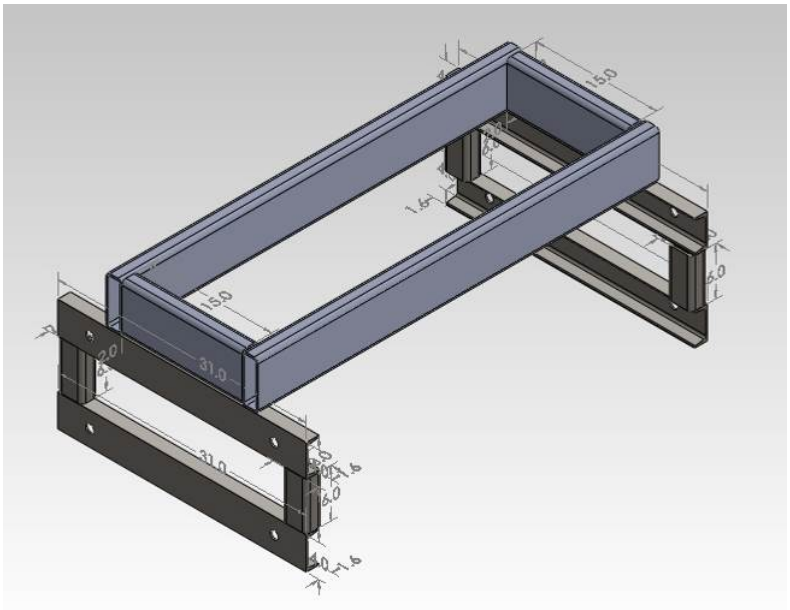

Source: Altex Technologies Corporation

A picture of one of the cooling sections is shown in Figure 29.

Figure 29: Cooling Section Fabricated at Nunez Precision Welding Ready for Assembling With Purchased Evaporative Cooling System

Photo Source: Altex Technologies Corporation

The evaporative cooling system was purchased from Cooling Tower Systems, 196 Lower Cherry Street, Macon, GA 31201, and the equipment was received at the Altex Watsonville facility. The picture of the evaporative cooling system is shown in Figure 30. The plumbing for connecting the pump, sump, over-flow valves, and so forth was completed and the system was tested for proper operation.

Figure 30: Picture of Evaporative Cooling Section Purchased

Photo Source: Altex Technologies Corporation

3.4 Fabrication of Heating Section and Gate Assembly

The SolidWorks models for the heating system components were prepared, reviewed, updated, and finalized. These SolidWorks models were used for the fabrication drawings and Bill of Materials (BOM) for the heating system. The final model of the full-scale heating section is given in Figure 31. Pipes, gate valves, thermocouples, and flow meters that support the test system were also purchased.

Figure 31: Model of Heating Section Used to Prepare Manufacturing Drawings

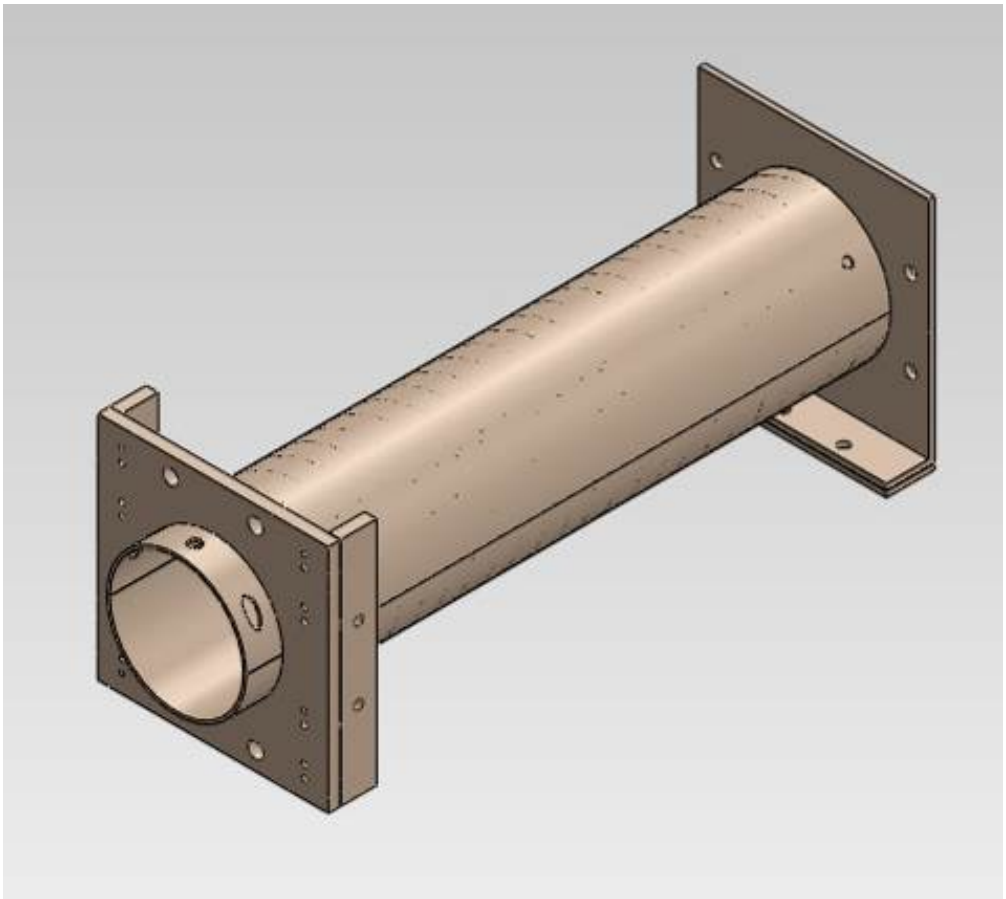

Source: Altex Technologies Corporation

The order for fabrication of the new heating section was placed at Nunez Precision Welding, Inc., and the component was completed as illustrated in Figure 32.

Figure 32: Picture of Heating Section Fabricated at Nunez Precision Welding Inc.

Photo Source: Altex Technologies Corporation

The SolidWorks model of the gate valve was prepared and is shown in Figure 33. The model was used to prepare the BOM and manufacturing drawings. The rollers needed for the gate were purchased from Motion Industries, Santa Clara, California.

Figure 33: Exploded View of Model of the Gate Section Used to Prepare

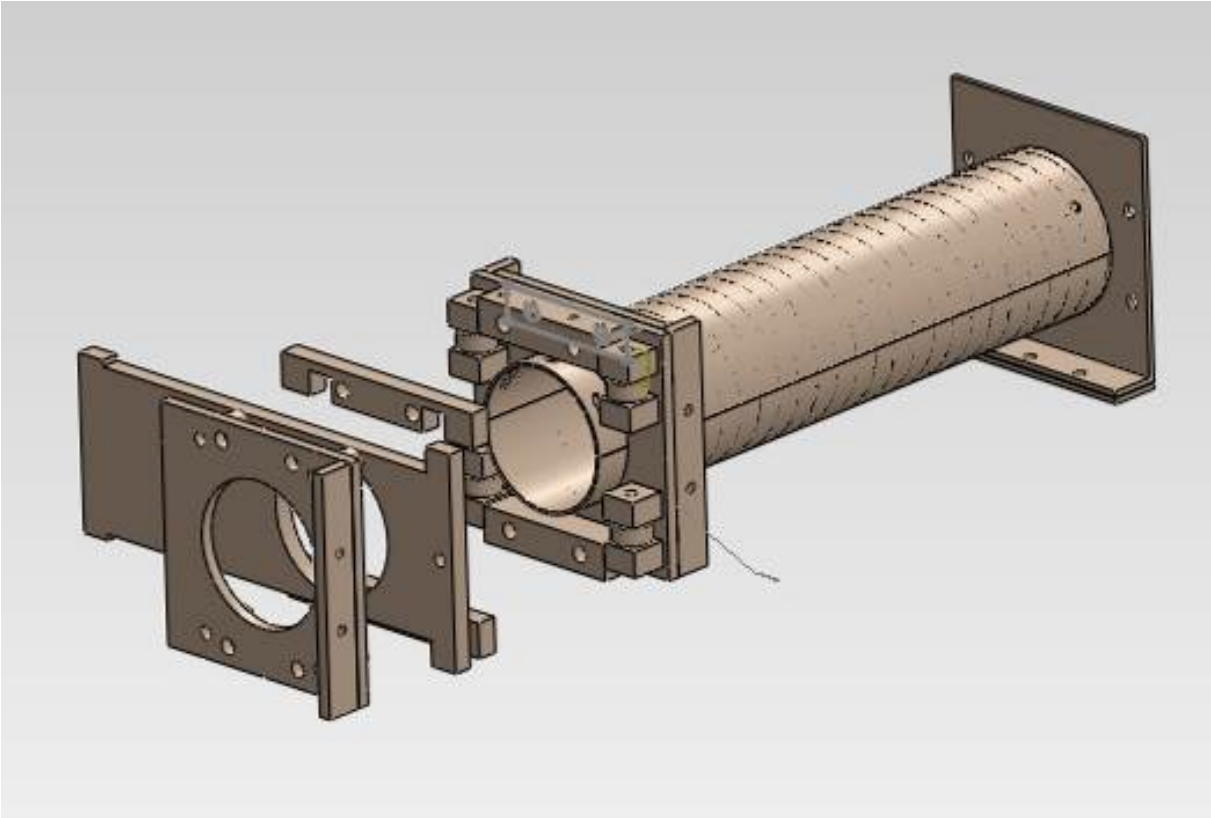

Source: Altex Technologies Corporation

3.5 Fabrication of Bale feeder

The SolidWorks model of the bale feeder was used to prepare the bill of materials, detailed component drawings and assembly drawings. These drawings were sent to two different fabrication shops at Milpitas, CA and Menlo Park, CA for quotation. Based on a review of quotes, Nunez Precision Welding Inc., 1820 Houret Court, Milpitas, CA was selected for fabrication of the bale feeder frame, which is shown in Figure 34. The chains, sprockets, bearing blocks, conveyor channels, and so forth that will complete the feeder fabrication were purchased and assembled at the Altex facility.

Figure 34: Picture of Frame of Bale Feeding System

Photo Source: Altex Technologies Corporation

Once fabricated, the bale feeder frame unit was moved to the Altex facility for subsequent installation of the conveyor and bale breaking system components. A chain-based conveyor is used in the feeder to move the bales from the system inlet to the bale breaker located ahead of the compaction chamber feeder. The required number of 2″ pitch chain links was welded with 32″ long 2″ wide steel channel pieces, which support the bales and convey them to the bale breaker. Purchase orders for the supply of two hydraulic motors and other hydraulic components installed in the bale feeder were placed. These components were delivered to the Altex facility. A picture of the bale feeder frame with the hydraulic motor mounting platform is shown in Figure 35. The assembling of chains, sprockets, and bearing blocks required for the bale conveyor and breaker was completed. The performance of the bale breaker and feeder was demonstrated independently before integrating the unit with the full-scale BBADS equipment.

Figure 35: Picture of Frame of Bale Feeding System Ready for Installation of Conveyor and Hydraulic Motors Ready for Assembling with Full-Scale BBADS System

Photo Source: Altex Technologies Corporation

A model was developed for the main feeder and necessary refinements were incorporated. The refined model included provisions for installation of a weighing platform for the biomass, so that uniform quality logs can be produced in the full-scale BBADS equipment. In particular, application of the BBADS process to the high-value forage market requires development of uniform-weight logs. Hence, a separate weighing system was required in the feeding system. In the case of biofuel and co-firing markets, where uniformity of logs is not as important, the feed weight will be set by the speed of the bale feeder sprockets. The uniformity of logs as determined by the speed of the feeder sprockets is within one pound. This accuracy will be sufficient for biofuels and co-firing markets. Based on these analyses, a SolidWorks model was modified to incorporate a weighing platform in the feeder. The refined SolidWorks model was

used to prepare a bill of materials and detailed engineering and assembly drawings that were then sent to different shops for quotation. Figure 36 shows the SolidWorks model of the feeder platform and assembly drawing of the main feeder for the full-scale BBADS equipment.

Figure 36: Assembly Drawing of Feeder to be Integrated with the Main Frame

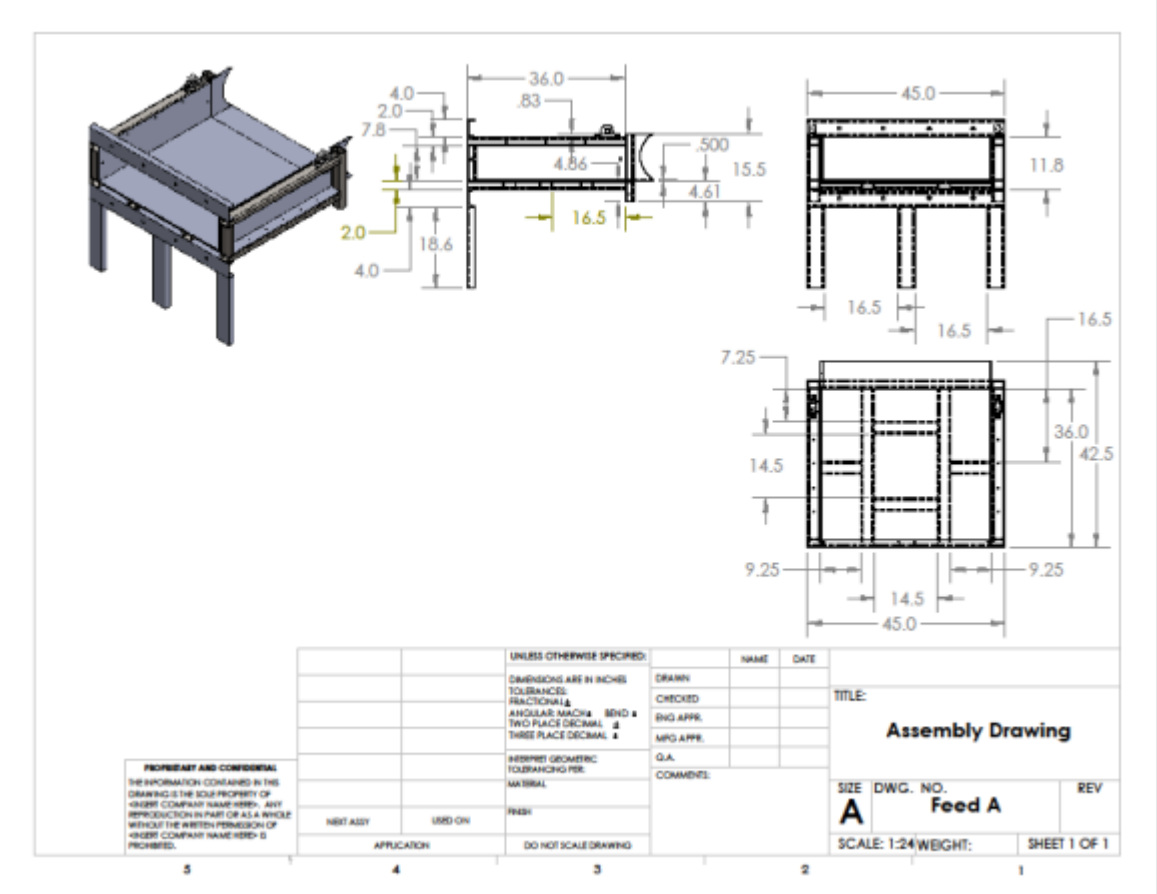

Source: Altex Technologies Corporation

Figure 37 shows the isometric view and assembly drawing of the feeder cover door to be developed and installed in the full-scale BBADS equipment. The operating cycle of the door and pusher has a significant effect on the throughput of the full-scale equipment. The operating cycles must be controlled in such a way so that no residues will get into the area in back of the pusher during the return stroke of the pusher. The innovative door design used in this project allows the feeding of biomass without residues affecting the operation of the pusher in the main compression chamber. This door will be actuated using hydraulic cylinders and operate at a speed of less than four cycles/minute. Hence, detailed FEA analysis was carried out using SolidWorks software, and final design refinements were incorporated into the design to increase the strength and durability of the door. The bill of materials, detailed engineering drawings, assembly drawings, and so forth were prepared and sent to different shops for quotation. Based on the review of quotes, an order was placed with Nunez Welding Inc. for fabrication.

Figure 37: Assembly Drawing of Main Door of the Feeder

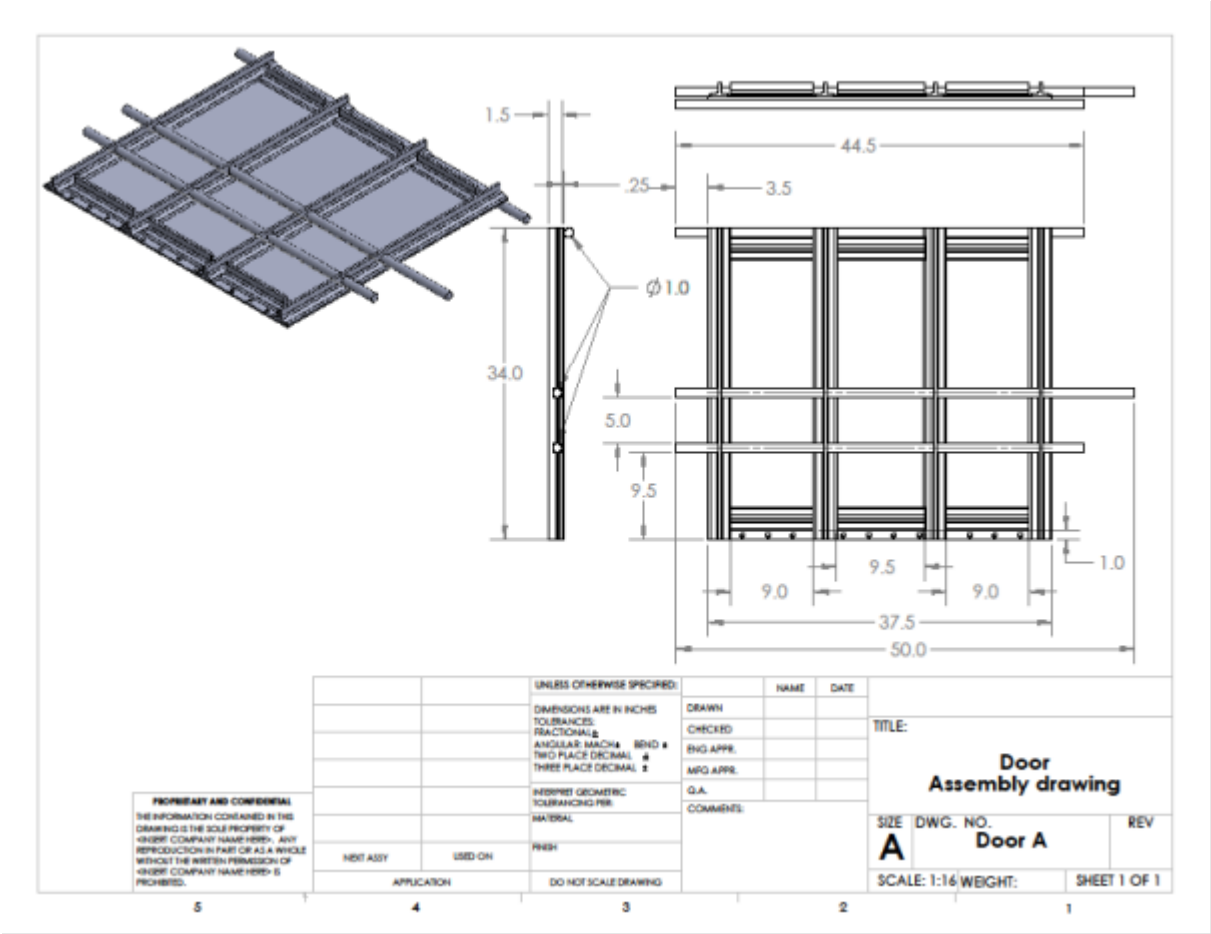

Source: Altex Technologies Corporation

The feeder fabrication was completed at the Nunez shop. All the required steel metal parts were produced as per the BOM and detailed engineering drawings. The tack welding of different metal parts ahead of final fitting and welding was also completed and the picture of the feeder frame is shown in Figure 38. This feeding section encloses two moving parts, namely the door and the shovel operated by the new hydraulic power unit. To ensure proper mating and operation, final checks on the alignment of different mating sections, both on the tack welded frame and existing BBADS compaction equipment frame, were carried out. The mating section were found to be perfectly aligned after the tack welded frame dimensions and corresponding dimensions on the existing frame were measured and compared.

Figure 38: Picture of Feeder under Fabrication

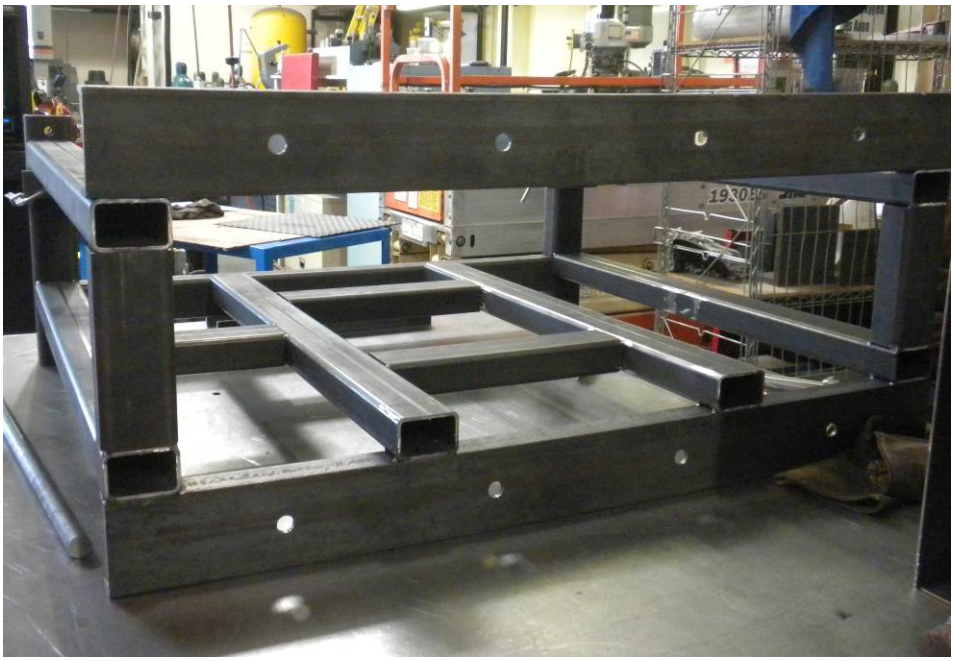

Photo Source: Altex Technologies Corporation

Figure 39 shows a picture of door components that were manufactured as per the component and assembly feeder drawings. The fabricated door with tack welding was temporarily mounted inside the feeder section and tested for smooth operation, as per the design. It was found that the tolerances provided between the door and frame was sufficient to prevent rubbing during operation. The door is operated using a 2″ diameter and 6 ½″ stroke double acting hydraulic cylinder provided by West Coast Fluid Power.

Figure 39: Picture of Door Components Under Fabrication

Photo Source: Altex Technologies Corporation

3.6 Installation and Test of Cooling Section

The two BBADS modular cooling sections and the evaporative cooling systems were assembled, installed, and the cooling system performance was tested. A picture of the BBADS system after installation of new cooling sections at the Watsonville test facility is shown in Figure 40. This configuration allows increased system throughput. Figure 41 shows the picture of the evaporative cooling system. The combined system will support a factor of six higher throughput versus the previously tested pilot-scale system. Cooling performance tests were carried out to determine the system performance, and it was observed that the cooling water temperature was maintained at least 44.6°F (7°C) to 46.4°F (8°C) below ambient air dry bulb temperature during different days of testing. This is an important advantage for maintaining quality logs during extremely hot weather.

Figure 40: Picture of BBADS System after Installation of New Cooling System

Photo Source: Altex Technologies Corporation

Figure 41: Picture of Evaporative Cooling System after Assembling with BBADS Equipment

Photo Source: Altex Technologies Corporation

3.7 Preparation for Installation of Heating Section

In preparation for the feeder integration the feeding section with main cylinder was rotated by 90 degrees for installation of the heating and cooling section components. Figure 42 shows the picture of feeding section and main cylinder, with the feed opening on the right side, after rotating them by 90 degrees and mounting these components on the BBADS system frame.

Figure 42: Rotation of BBADS System Components at Watsonville Facility of Altex

Photo Source: Altex Technologies Corporation

3.8 Fabrication and Test of Bale Feeder with Motors and Conveyor

A picture of the bale feeder after assembling with the chain conveyor, loading platform, and hydraulic motors, is shown in Figure 43. The bale feeder is fitted with two hydraulic motors for conveying the bales and separating the bales with a "debaler" to produce a loose format feed for compatibility with the compactor. The conveyor motor (bigger motor at the center of the frame in the picture) provides the necessary torque for moving two small bales (22″ X 14″ X 48″) onto the separator chain mounted at an incline to the conveyor. The chain conveyor is

fabricated using chain links having a pitch of 2″. The conveyor motor used in the bale feeder has 24.7 cubic inches rotor volume and has a 2 Bolt "A" type mount. The motor can develop a torque of 6700 lb-in at operating hydraulic fluid pressure of 2000 psi. The chain conveyor will be required to transport two bales having 240 lbs weight at a speed of 24″/minute to meet the throughput goal. The torque developed by the motor will be sufficient to convey bales loaded on the platform to the separator chain mounted at the end of the feeder. The conveyor motor will rotate at a speed of eight rpm at a hydraulic fluid flow rate of 1.5 gpm. Since the conveyor belt requires a speed of 1.5 rpm, necessary reducer sprockets were designed and installed along with a protective cover to avoid damage.

The separator chain running at an incline is operated by the separator motor (small motor at the top of frame in the picture). The separator motor has a 2.2 cubic inch rotor volume and has a 2 bolt “A” type mount. The motor can develop a torque of 800 lb-in with a hydraulic fluid pressure of 2000 psi. The motor requires a hydraulic fluid flow rate of 3 gpm to rotate the motor shaft at a speed of 200 rpm. The different flow rates for the two hydraulic motors are controlled using pressure compensated flow control valves fitted in the hydraulic control manifold fabricated at West Coast Fluid Power.

Figure 43: Picture of Bale Feeding System Ready for Assembling with Full-Scale BBADS System

Photo Source: Altex Technologies Corporation

3.9 Assembly and Test of Main Feeder with Bale Feeder

The main feeder, as shown in Figure 44, was fabricated at the Nunez shop. The fabricated main feeder was tested for compatibility with the bale feeder at the Altex facility. Proper opening and closing of the hinged door inside the main feeder was checked for efficient and reliable feeding. This testing was needed ahead of integration of the feeder with the BBADS compaction component. The shovel, shown in Figure 45, that pushes the biomass from the feeder table into the compaction chamber, has to move horizontally inside the main feeder. The dimensions and compatibility of the shovel with the main feeder section were tested and checked. The shovel will be operated using a 40″ stroke hydraulic cylinder fitted on the platform in the bale feeder. Following these tests, the main feeder was transported to the Watsonville facility for integration with the main frame of the BBADS compaction equipment.

Figure 44: Picture of Feeder under Fabrication

Photo Source: Altex Technologies Corporation

Figure 45: Mounting Components for Integrating 40" Long 4" Diameter Hydraulic Cylinder with Shovel

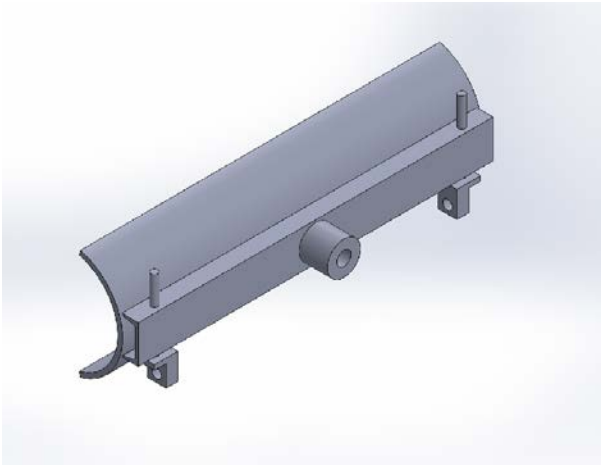

Source: Altex Technologies Corporation

3.10 Integration of BBADS Subsystems

This activity included the integration of feeders, cooling system, hydraulic system and thermal fluid system to the main frame of the full-scale BBADS equipment. The frames and pushers of the pilot-scale BBADS equipment were upgraded and integrated with different subsystems to develop a fully functional full-scale BBADS system.

3.10.1 Integration of Feeder with BBADS Equipment

Figure 46 is a picture of the feeder component ready to be integrated with the main frame of the BBADS compaction equipment. The hinged door of the main feeder is actuated using a 6.5″ long 2″ diameter hydraulic cylinder. This hydraulic cylinder is operated by the new 20 HP hydraulic power unit fabricated at West Coast Fluid Power.

Figure 46: Picture Showing Main Feeder Integration with the Main Frame of BBADS Equipment

Photo Source: Altex Technologies Corporation

In the pilot-scale BBADS equipment, the feed door at the top of the unit was operated as a hinged door using an 8″ hydraulic cylinder. This configuration required some manual feeding that is not acceptable for the full scale equipment. In the full-scale equipment, the door is now located on the side of the unit, and rather than swinging shut, the shovel type door is operated linearly in the horizontal direction using a 40″ long hydraulic cylinder. The unit was tested to ensure the proper fit of the door in the BBADS compactor section.

Figure 47 gives a picture of the hydraulic cylinder integrated with the door cylinder. The loose biomass separated in the bale breaker falls on the rectangular feeding section with the door in the open position. Once the required quantities of materials are collected in the feeding section,

the door is then closed and the shovel (blue part) sweeps and forces the material into the compression section.

Figure 47: Picture of Installed Door along with Hydraulic Cylinder

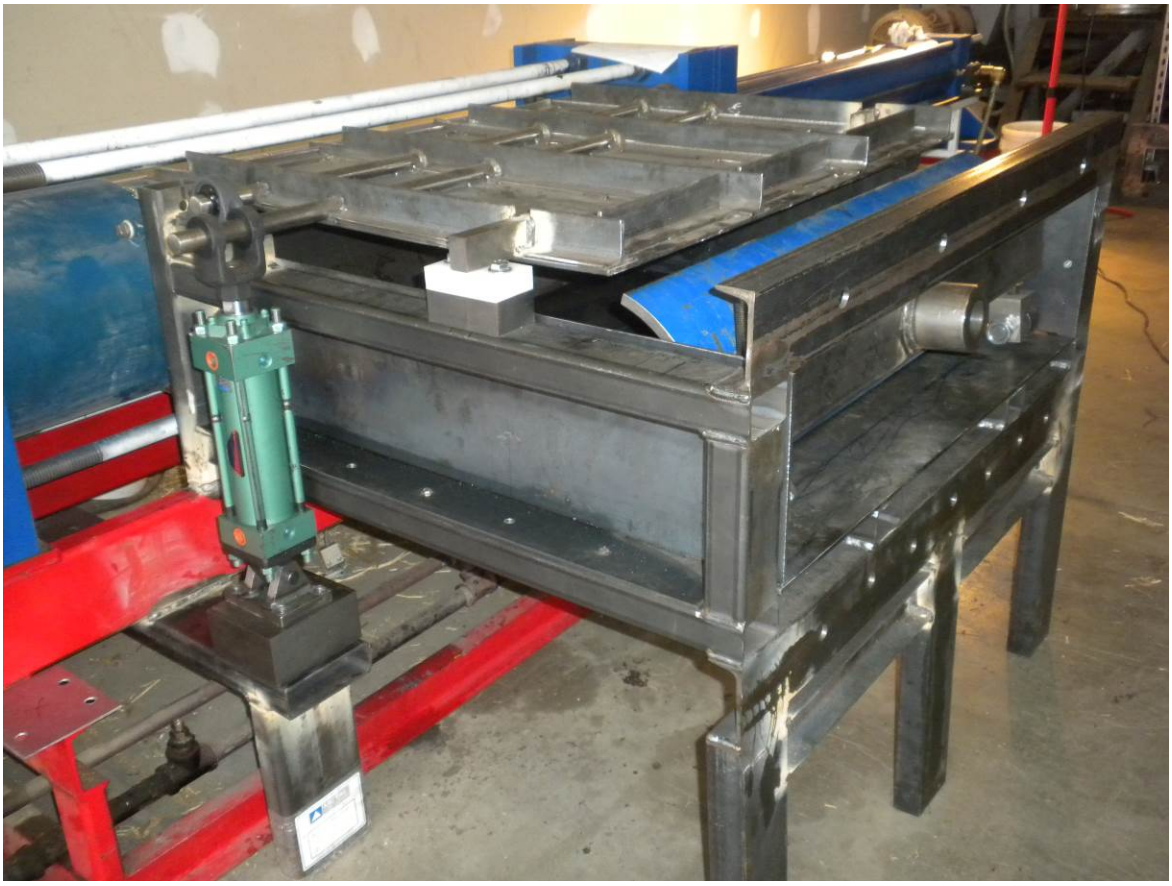

Photo Source: Altex Technologies Corporation

3.10.2 Integration of Bale feeder

Integration of the main feeder included: (1) installing an electronic weighing platform to control the weight and size of logs produced in the BBADS equipment, and (2) integrating the operation of the shovel by the hydraulic cylinder for feeding and compressing loose material from the bale feeder into the compaction section.

A platform scale fitted with a 100 lb capacity load cell was selected for use in BBADS, and the unit was acquired from Avery Weigh Tronix. The electronic signal from the weighing platform controls the movement of the feed shovel cylinder and compaction door cylinder.

For integration of the shovel with the main feeder, a 4″ diameter and 40″ long hydraulic cylinder has to be mounted on the frame of the bale feeder, as shown in Figure 48. The operation of this hydraulic cylinder is controlled using a position control device. For this purpose, a linear position control device, shown in Figure 49, was purchased from Celesco and installed in the feeder.

Figure 48: Picture of Installation of Shovel Cylinder in the Frame of Bale Feeder

Photo Source: Altex Technologies Corporation

Figure 49: Picture of Linear Position Control Device Installed in the BBADS Equipment

Photo Source: Altex Technologies Corporation

3.10.3 Integration of Cooling System with BBADS Equipment

Proper temperature maintenance in the cooling section determines the quality of logs and also affects the main compression hydraulic cylinder pressure required to push the logs down the tube. To control the cooling section temperature for maximum throughput and log quality, the cooling water flow rate must be controlled using a flow meter and a three-way valve installed in the cooling circuit. The pressure measured by the pressure transducer installed in the main

hydraulic cylinder is used to control the water flow rate in the cooling section. As the pressure in the main cylinder exceeds 2000 psi, the water flow to the cooling section is shut off using the three-way valve, and the water recirculated within the evaporative cooling system. As the pressure requirements in the main hydraulic cylinder decrease and the temperature in the cooling section increases, water will circulate into the cooling section using the three way valve. For this purpose, an electrically actuated three-way control valve was selected and purchased, as shown in the right of Figure 49.

For the larger capacity full-scale system, a higher performance evaporative cooling system will be used. Figure 50 shows the cooling system components that were installed in the BBADS equipment and tested successfully during preliminary trials. The components of the new evaporative cooling system include an evaporative cooling tower, a water circulation pump, a fan, and an electronically controlled flow mixing device with a flow meter. The water circulation motor, fan motors, and so forth were connected and energized and their cooling performance tested.

Figure 50: Picture of Complete Cooling System of BBADS Equipment at the Watsonville Facility

Photo Source: Altex Technologies Corporation

3.10.4 Development and Integration of Hydraulic System

The hydraulic system for BBADS compaction consists of two hydraulic power units driven with (1) a 30 HP motor for operation of pusher and (2) another 20 HP motor for operation of the feeder. The power units were built at West Coast Fluid Power, Sacramento. These units were transported to the Watsonville facility and integrated with the BBADS equipment. The main compression section is fitted with a 7″ diameter and 60″ long hydraulic cylinder. The feeder is fitted with two hydraulic motors, one hydraulic cylinder of 4″ diameter and 60″ long for operation of the shovel, another 2.5″ diameter and 6.4″ long cylinder for operation of the door, and four pancake cylinders for operation of the biomass weighing platform.

Two hydraulic power units were installed on the two sides of the feeder, as shown in Figure 51, for easy inspection, operation, and testing at the Watsonville facility. Figure 51 (top) shows the hydraulic power unit fitted with the 30 HP electrical motor for operation of the pusher. The two-stage pump fitted in the power unit enables the operation of the pusher at more than 10″/sec in the initial low pressure section, and 2″/sec during the final high pressure compaction. The hydraulic manifold with flow control valves was installed and tested for proper operation of the pusher. Figure 51 (bottom) shows the picture of the hydraulic power unit fitted with a 20

HP electrical motor. The unit has been fitted with a two-stage pump that operates five different actuators. These actuators consist of three manifolds and control valves installed on the reservoir of the power unit. The output from the first-stage pump is connected to the first manifold that has flow control valves to operate the shovel and door cylinders. The pressure and tank lines from this manifold are connected to the second small manifold, which is fitted with control valves for the operation of the pancake cylinder for the electronic weighing system. The output from the second-stage pump is used to operate the two hydraulic motors fitted in the feeder. Since the third manifold pressure line is closed between two control valves, it is possible to operate the two hydraulic motors independently of each other. The electrical motors were energized and the solenoid switches for the flow control vales were connected to the main control box for proper operation.

Figure 51: Picture of Complete Hydraulic System of BBADS System at the Watsonville Facility

Photo Source: Altex Technologies Corporation

After successfully testing the bale breaker, Hydraulic Power Unit I was sent to West Coast Fluid Power for installing the new 30 HP motor in place of the 20 HP electric motor. Figure 52 shows the picture of the old hydraulic unit fitted with the new 30 HP electrical motor. All system components were serviced at West Coast Fluid Power and sent back to Altex for installation and testing of components.

Figure 52: Main Power Unit with Installed New Higher Power Motor

Photo Source: Altex Technologies Corporation

3.10.5 Integration of Hydraulic System with Feeding System

All of the feeding components, such as bale and main feeder, were fabricated at Nunez Welding Inc. and installed on the full-scale BBADS system at Altex's Watsonville facility. The main compaction section, shown in Figure 53, is integrated with the new feeder components that will yield continuous operation at a 15 second log production cycle. The main compaction section is activated by the larger hydraulic power unit that uses a 30 HP electrical motor. All of the electrical connections were tested for proper operation at the Watsonville facility.

Figure 53: Picture of Main Compaction Section (left) Integrated with Feeding Section (right)

Photo Source: Altex Technologies Corporation

The bale breaker and main feeder were fully fabricated and installed with hydraulic components and integrated with the main compaction section, as shown in Figure 54. The bale feeder is operated by two hydraulic motors and the main feeder is operated by a hydraulic cylinder. During operation, two standard bales of 22″ X 14″ X 48″ dimension are loaded onto the conveyor belt of the bale breaker. The bale breaker motor moves the bales onto the breaker at a speed of 8″/minute. As the bales are moved forward, the bales are broken down into loose material, and fall onto the feeding chamber floor in the feeding section. As required amounts of materials are collected in the feeding chamber, the door of the feeding section closes and the shovel forces the biomass into the feeding section.

Figure 54: Picture of complete Feeding System of BBADS Equipment at Watsonville Facility

Photo Source: Altex Technologies Corporation

3.10.6 Development and Integration of Thermal Fluid System

The integration of the acquired thermal fluid system with BBADS equipment required the development and installation of an expansion tank that prevents vacuum/low pressure from developing due to volume changes during heating and cooling of the thermal fluid. Based on the volume of thermal fluid jackets in the BBADS equipment, volume of heating coil in the thermal fluid system, and volume of plumbing lines in the system and also based on the co-efficient of thermal expansion of the Multitherm OG oil thermal fluid, it was estimated that an expansion tank of not less than 100 gallons is required. To meet this need, a commercially available Parker Boiler thermal oil expansion tank with built-in controls was acquired. The expansion tank integration work was carried out at San Jose Boiler Works, 1585 Schallenberger Rd. San Jose, CA. For the field tests, UC Davis will have propane fuel available for the thermal oil heater. For compatibility with the propane fuel supply, the existing heater burner was replaced with a propane burner. A Midco International propane burner, model: Economite RE4850BA, was selected for use and purchased from Cornely Company of San Francisco. The RE4850BA is capable of delivering between 280,000 and 850,000 Btu/hour and comes with full modulation controls to maintain a steady oil temperature for the BBADS system.

Figure 55 shows a picture of the thermal fluid heater after installing the new expansion tank, as per the design for integration with the full-scale BBADS equipment. All the plumbing work was completed, and the unit is ready for shipping to the Altex Watsonville facility for integration with the full-scale BBADS equipment. The expansion tank was installed with a thermal fluid level indicator, level sensors, float valves, and so forth for ensuring safe and trouble-free operation. The control system provided in the existing control box was modified to accommodate the controls needed for the propane burner. The thermal fluid heater was fitted with a 5 HP thermal fluid pump. The fluid heater control system uses both the temperature and pressure of the oil exiting the heating section for controlling both burner and pump operation. The temperature, pressure transducers, and pump starters were purchased and integrated with the thermal fluid heater.

Figure 55: Installation of Expansion Tank on the Thermal Fluid System

Photo Source: Altex Technologies Corporation

The thermal fluid heater system will be fitted with a new propane burner pictured in Figure 56. The burner is provided with different fuel orifices that can control the burning rate from 400,000 Btu/hour to 850,000 Btu/hour. In addition, a Honeywell motor integrated with the burner can modulate the fuel and air flow rate to vary capacity from 280,000 to 400,000 Btu/hour. The temperature sensor installed in the BBADS equipment outlet will be used to modulate the Honeywell motor.

Figure 56: Picture of New Propane Burner to be Installed in the Thermal Fluid System

Photo Source: Altex Technologies Corporation

Figure 57 shows a picture of the thermal fluid heater after integration with the BBADS heating section.

Figure 57: Picture of Complete Thermal Fluid System for BBADS Equipment at the Watsonville

Photo Source: Altex Technologies Corporation

3.10.7 Development and Integration of Control System

A fully functional electrical control panel was developed, tested, and integrated with the full-scale BBADS system. As shown in Figure 58 (top left), all of the electrical and electronic components needed for the control of the BBADS system were installed on the control board and then installed inside the control box, as shown in Figure 58 (top right). After installation of the board, the push button switches and knob switches were installed on the door of the control box, as shown in Figure 58 (bottom left). After installation of the control board and switches, necessary wiring connections were completed. Data acquisition, and subsystem instrument control of the BBADS system are achieved using National Instruments Compact Data Acquisition modules (cDAQ) and labVIEW software installed on a laptop computer. The control box is also built with a power and data outlet, as shown in Figure 58 (bottom right), for connecting the laptop required for operation and control.

Figure 58: Pictures of (a) All the Electrical Components Installed on the Board (top left) (b) Electrical Board Installed inside the Control Box (top right) (c) Fully Developed Control Box (bottom left) (d) Electrical Outlet for Computer and Data Cable Connection

Photo Source: Altex Technologies Corporation

The development of the entire control system was completed and tested for proper operation by connecting the control system with the laptop computer. Figure 59 shows a picture of the control system connected with the computer during testing. During lab testing, the control system was tested by connecting indicator lights between connections and tested by using the labVIEW control program developed for this purpose.

Figure 59: Picture of Testing of cDAQ Modules and Other Components before Installing on the BBADS Equipment

Photo Source: Altex Technologies Corporation

The labVIEW-based program will allow the operation of BBADS through manual sequence control and also fully automated control. The front panel of the labVIEW program for manual sequence control and fully automated sequence control are given in Figure 60 and Figure 61, respectively.

Figure 60: Picture of Front Panel of labVIEW Program in Manual Sequence Control

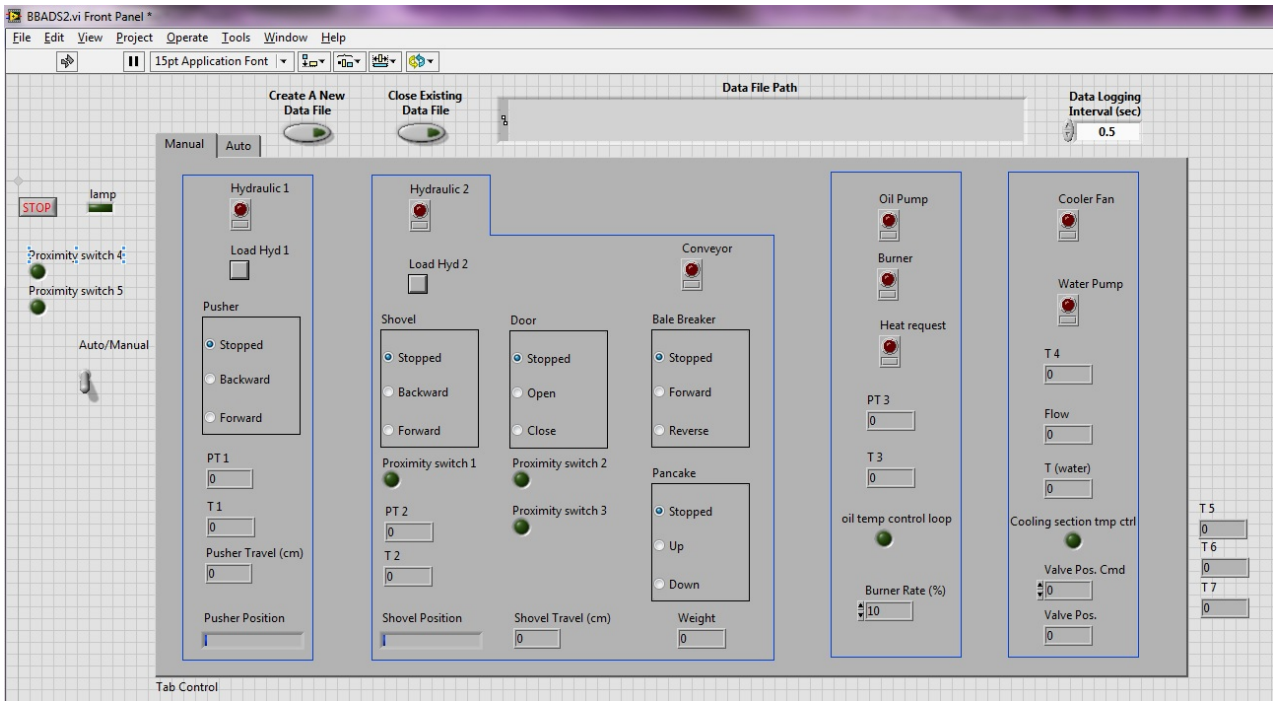

Source: Altex Technologies Corporation

Figure 61: Picture of Front Panel of labVIEW Program in Automated Sequence Control

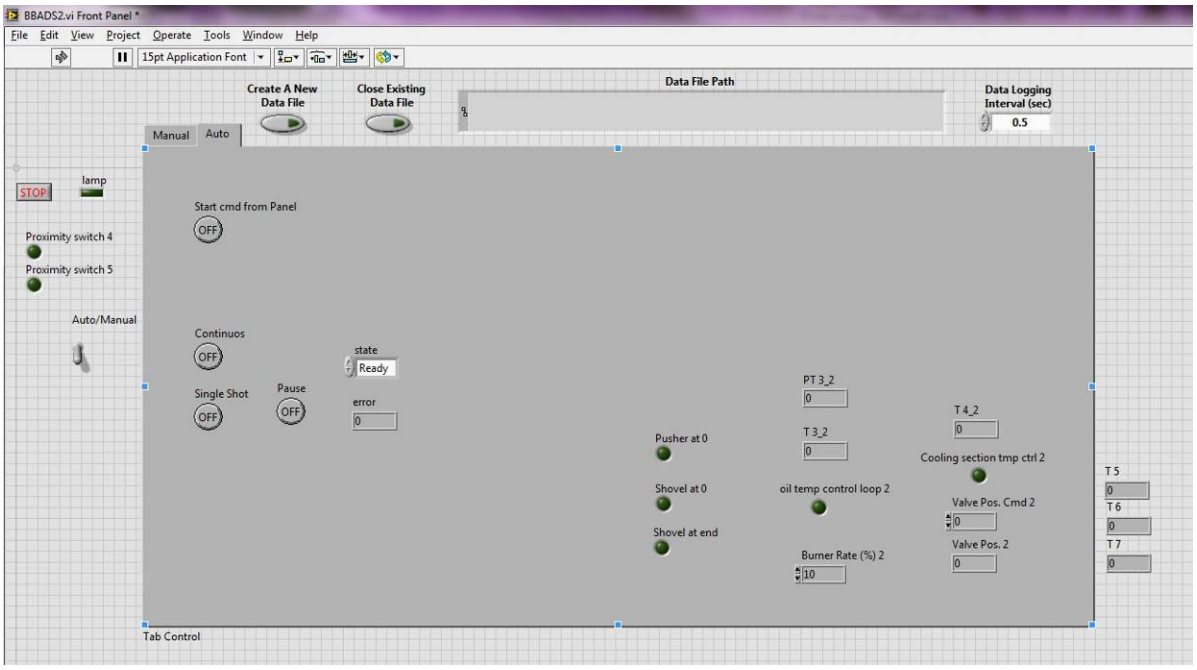

Source: Altex Technologies Corporation

After development and testing of the control system at the Altex Sunnyvale facility, it was transported to the Watsonville facility and integrated with BBADS equipment, as shown in Figure 62.

Figure 62: Picture of Control System after Integration with BBADS Equipment at the Watsonville Facility

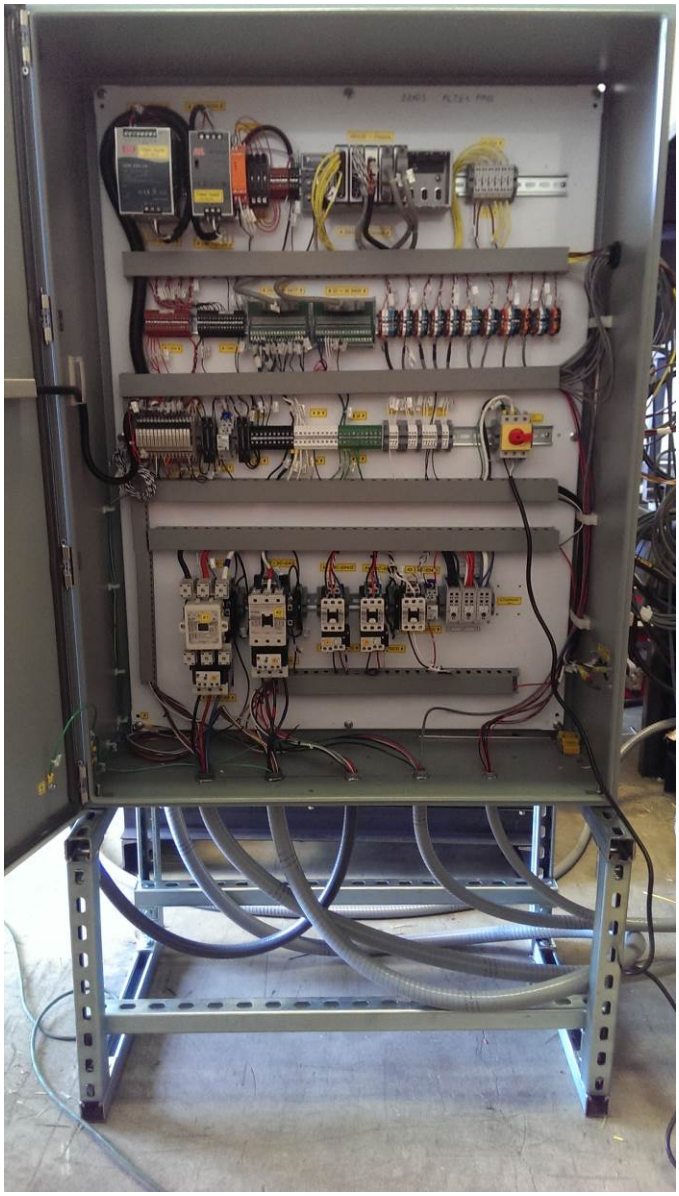

Photo Source: Altex Technologies Corporation

CHAPTER 4:
Laboratory Testing

The goal for this task was to test the operation and performance of BBADS mechanical, electrical, and electronic components, as well as the integrated operation of the BBADS system.

Specific objectives of this task include the following:

- Testing of different components, such as linear position control devices, three-way valve, hydraulic cylinder, and manifold operation and control.
- Testing of subsystem performance, such as feeder operation for different biomass materials, hydraulic system performance for biomass feeding and compression, and biomass cooling system performance.
- Testing of the integrated subsystems for continuous operation and control and log production.

4.1 Component Level Testing

Components were tested to prove their integrity and fit ahead of complete system integration and testing. Two items of interest are the new position control devices and the control system for automatic operation.

4.1.1 Testing of Linear Position Control Device

The full-scale BBADS compaction system is fitted with two position control devices for measuring and controlling the pusher attached to the main compression cylinder that compacts the biomass and the biomass feeder shovel attached to the feeder cylinder. The control system developed for BBADS uses the location of these linear position controls to minimize the cycle time and maximize the capacity of the BBADS equipment. In order to determine the operational accuracy of these position control devices they were tested after installation on the machine.

The magnet type position control device was installed on the side of the main cylinder, as shown in Figure 63 (left) and exact position of the pusher was tested. Figure 63 (right) shows the magnet that was attached to the thermal fluid lines for the pusher. Electrical outputs from the sensor were measured and test results showed that the position of the pusher can be controlled to within an accuracy of $\pm$ 0.1”, which is sufficient for safe and efficient operation of the BBADS equipment.

Figure 63: Left: Rod Type Linear Position Control Device for the Main Cylinder; Right: Magnet that Follows Pusher by Attaching on Thermal Oil Flow Lines.

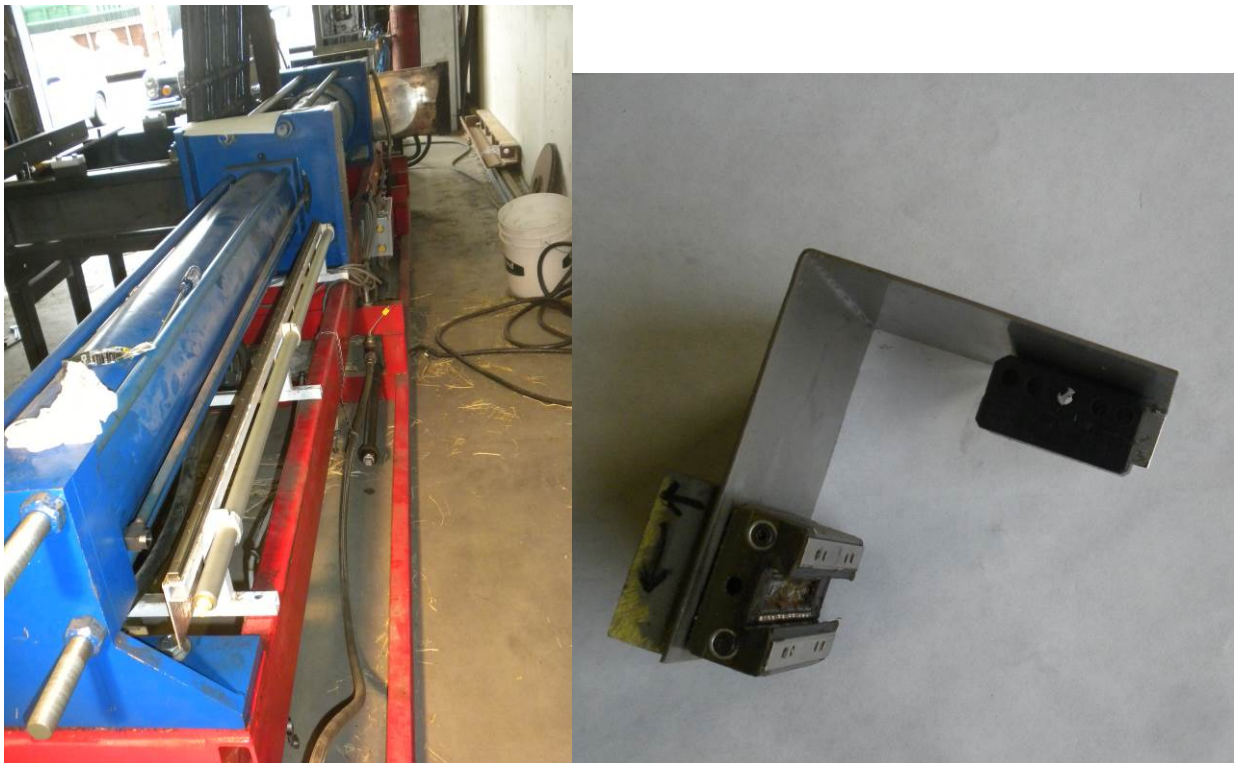

Photo Source: Altex Technologies Corporation

The accuracy of the Celesco Industrial model string type position control device, installed on the shovel cylinder, shown in Figure 64, was also tested. The electrical output measured using a multimeter indicates that the position of the shovel can be controlled by $\pm$ 0.1″. These tests show that the position of the BBADS hydraulic actuators can be sensed and controlled automatically without any difficulty.

Figure 64: Picture of Installed Linear Position Control Device on Shovel Cylinder

Photo Source: Altex Technologies Corporation

4.1.2 Development and Testing of Control System

The development and evaluation of a complete control system under simulated field conditions is described below. A labVIEW control program was developed to operate system actuators and tested in the laboratory. The cDAQ module was developed to operate the hydraulic system control valve solenoids and the linear position devices. All of the pressure transducers and thermocouple nodes were tested for operation using the labVIEW program developed for this purpose. Figure 65 shows a picture of the equipment during testing at the Altex control lab.

Figure 65: Testing of cDAQ module, Solenoid Switches, and Electronic Components at Altex Controls Lab

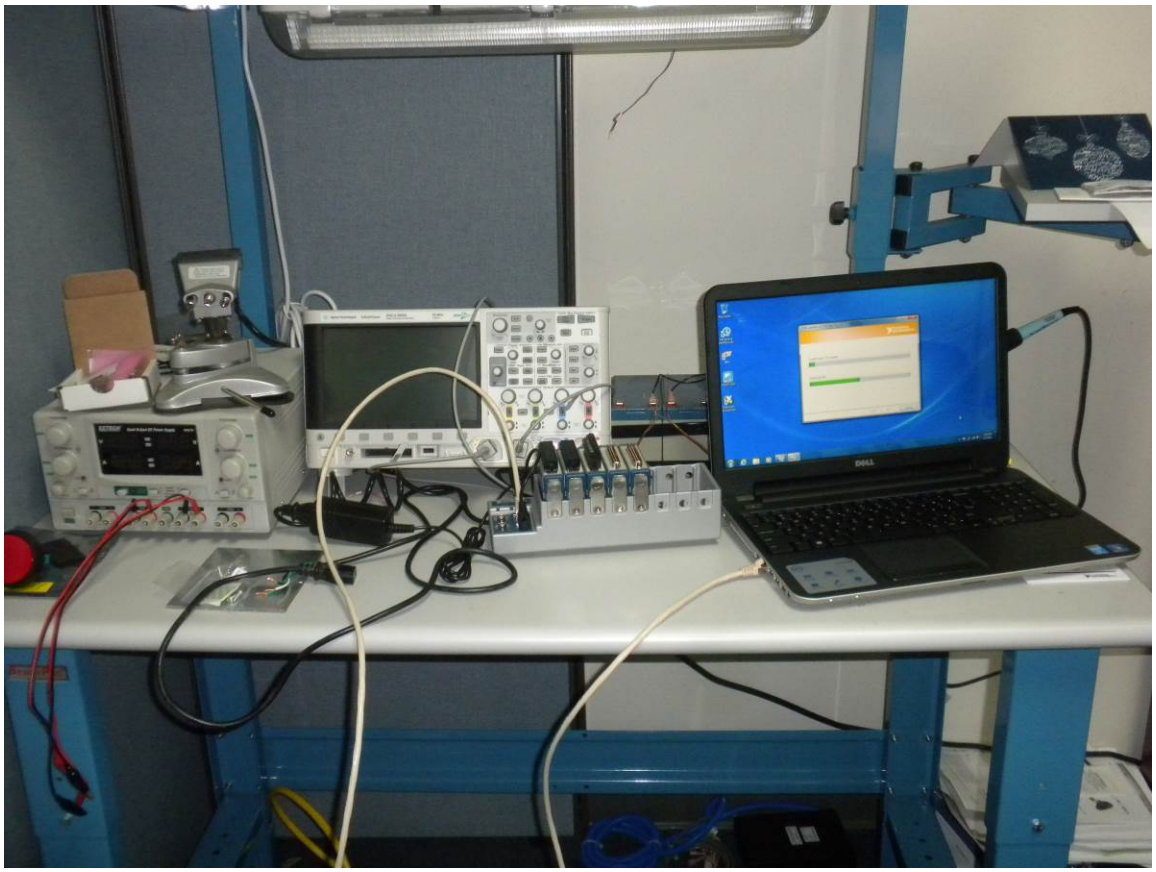

Photo Source: Altex Technologies Corporation

The labVIEW based program was developed to operate BBADS under manual sequence control and also fully automated control. This flexibility in control was beneficial during initial and later testing. The front panel of the labVIEW program for manual sequence control and fully automated sequence control are given in Figure 66 and Figure 67, respectively.

Figure 66: Picture of Front Panel of labVIEW Program in Manual Sequence Control

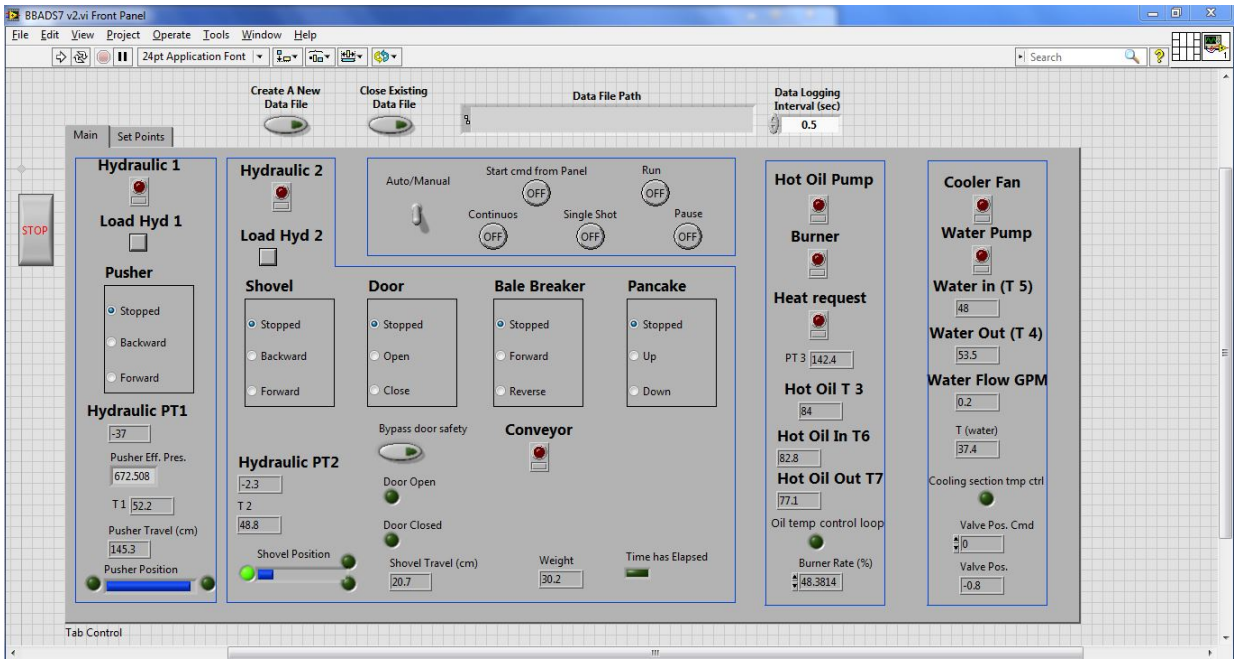

Source: Altex Technologies Corporation

Figure 67: Picture of Front Panel of labVIEW Program in Automated Sequence Control

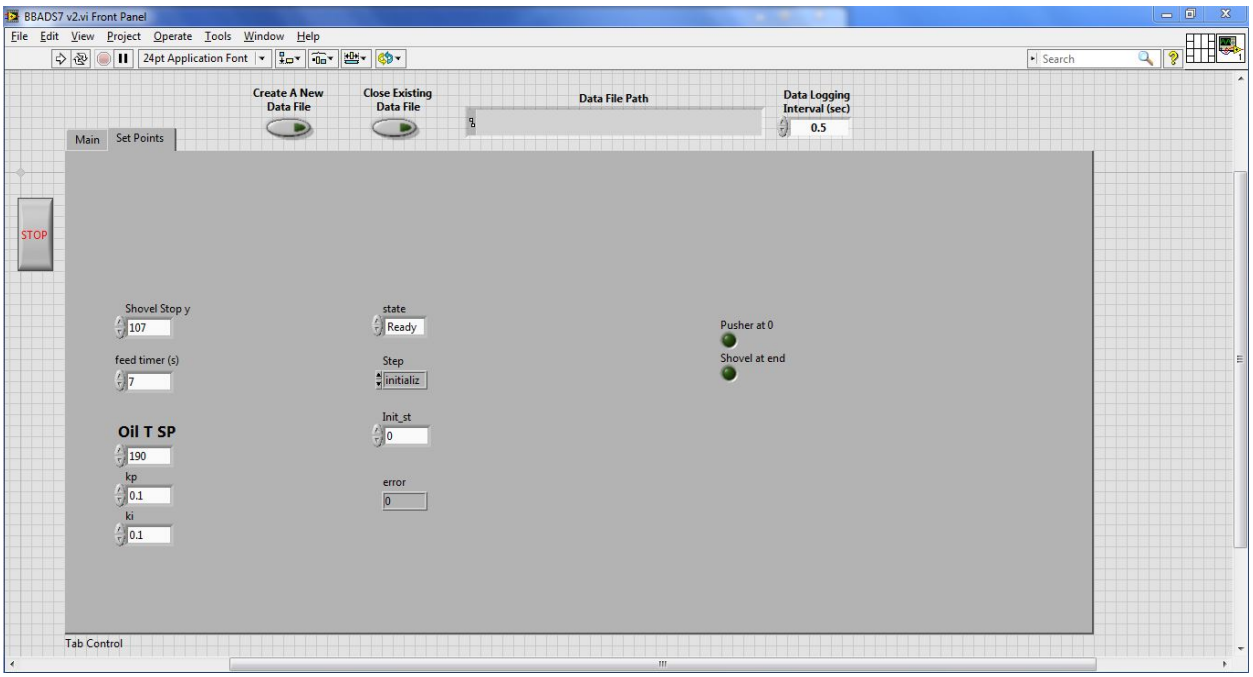

Source: Altex Technologies Corporation

4.2 Subsystem Level Testing

4.2.1 Bale Breaker Tests

The bale breaker decomposes the fed biomass bales into loose material that is then easier to feed and compress into logs. The assembled bale breaker is shown in Figure 68. Tests determined the ability of the system to break bales into a loose biomass format and load the material onto the feeder table ahead of forcing the material into the compactor.

Figure 68: Bale Feeder Operation for Separation of Biomass Flakes

Photo Source: Altex Technologies Corporation

In this test, the forward speed of conveyor chain and the speed of inclined separation chain were optimized for efficient breaking of bales. Test conditions are given in Table 12.

Table 12: Test Conditions for the Bale Breaker at Altex Test Facility

Biomass to be tested	Forward speed of conveyor chain, rpm	Inclination of bale breaker chain, °	Speed of breaker chain, rpm
Corn stover	1	60°	100
Alfalfa	1.5	75°	150
Switchgrass	2	90°	200

Source: Altex Technologies Corporation

During testing the following measurements were made:

- Weight of biomass collected per minute.
- Height of biomass heap on the main feeder.
- Losses if any, from under or at sides of the conveyor.

Initially, the bale breaker was run continuously without loading any bales. It was found that all the chains and moving equipment were running as per the design. The operational speed of the two motors was determined by the setting of a needle control valve installed in the hydraulic system control manifold. Speeds of the motors were measured using an Extech hand-held Tachometer available at Altex. It was found that the two hydraulic motors can be operated at the required speed using the existing hydraulic power unit and control manifold. Bales of different biomass were then loaded on the bale breaker conveyor belt to determine the performance of the bale breaker in terms of throughput.

During operation it was found that the bale breaker can be used to separate bales into flakes (bale segments created by multiple compressions during baling operations) or separate into loose biomass. Figure 69 shows the picture of where bale separation leads to a loose format without any flakes. When the separation motor speed exceeds 50 rpm, the bales will be broken into loose biomass, and when the separation motor speed is less than 50 rpm, the separated biomass is in the form of flakes. For measuring the throughput of the bale breaker, the separated biomass was collected every 10 seconds during operation. The weight of biomass and time of the cycle were used to determine throughput. The capacity data were collected for different feeder motor and separator motor speeds for wheat straw and miscanthus.

Figure 69: Bale Feeder Operation for Separation of Bales

Photo Source: Altex Technologies Corporation

BBADS equipment was designed for a maximum loading rate of 20 lbs/ cycle time of 15 sec. The bale breaker has a width of 30″ and hence two bales, of size 22″ X 14″ X 48″, can be loaded simultaneously into the bale breaker. To achieve the required capacity, the bales have to be broken down at a feed rate of 36 inches/minute. The bale feeder motor speed was adjusted to achieve a feeding chain speed of 36 inches /minute. The bale breaker was started and the weight of loose biomass collected for every 10 seconds was measured. The actual capacity of the bale breaker and the capacity of the bale breaker estimated from the feeding motor speed were used to determine the "slip" of the bale on the breaker conveyor. The measured slip can be as high as 50 percent, depending on the speed of the separation motor.

4.2.2 Integration and Testing of Hydraulic System

In the prior pilot-scale BBADS system, biomass was fed manually and the first and second stage compression, needed for densifying the biomass from 10 lbs/cf to 40 lbs/cf, was achieved using one hydraulic power unit fitted with a 20 HP electrical motor. In the current full-scale BBADS system, the high throughput continuous feeding and compression of biomass requires two hydraulic power units. The BBADS system has two power units, with a 30 HP electrical motor operating the main pusher cylinder and another 20 HP power unit operating all other actuators. The two power units were connected to the different actuators using hydraulic flow lines that were fabricated at West Coast Fluid Power, Sacramento, CA. Figure 70 (left) shows the feeder motor, bale breaker motor, biomass shovel cylinder, pusher, and so forth connected with hydraulic fluid lines. Twelve solenoid valves and control valves for six different actuators were tested and checked for proper operation. The different actuators were tested individually for

independent operation and finally tested for integrated operation. Test results showed that the entire hydraulic system was operating as per design.

The increased pusher speed, and thereby increased capacity, was tested and it was found that the forward speed can be increased to a substantial 8”/sec. The capacity of the feeder depends on four hydraulic actuators namely, the feeder motor, breaker motor, shovel cylinder, and door cylinder. The functional integrity of all four actuators was tested for proper operation and it was found that all actuators were functioning as per design. The shovel cylinder has a stroke length of 30” and the shovel has to move forward and backward within the rectangular feeding section (Figure 70, right). The shovel movement inside the feeding chamber was tested for proper speed of operation, without interference with the sides of the feeding box or top door surfaces. The functional integrity of the door, feeder conveyor, and breaker section were also tested for proper equipment operation and operator safety.

Figure 70: Picture of Hydraulic System Installed and Tested for Proper Operation

Photo Source: Altex Technologies Corporation

4.2.3 Testing and Integration of Thermal Fluid System with the New Burner

In the pilot-scale BBADS system testing, a thermal fluid system having a heating capacity of 20 KW, using electric heaters, was utilized. In the full-scale BBADS system, heating and temperature maintenance requires a much higher thermal fluid system that operates on propane. The new propane heating system of 500,000 Btu/hour heating capacity was fully integrated with the BBADS system and tested for proper operation.

The thermal fluid system burner was installed on the thermal fluid heater, as shown in Figure 71. A 500 liter capacity propane cylinder was rented from AmeriGas Company and installed outside of the Altex test facility in Watsonville, California. The fuel supply lines from the propane tank were connected to the burner using high pressure and low pressure regulators.

The oil outlet and inlet of the thermal fluid system were connected to the BBADS compression tube heating jackets using steel pipe as well as flexible hoses. Valves were included in the system so that the thermal fluid system can be disconnected from the BBADS system without any oil leaks for safe transportation to UC Davis and easy setup for demonstration. The thermal fluid system was filled with thermal fluid to eliminate any air pockets in the heater coil, thermal fluid lines, and expansion tank. Finally, the system was started and tested for the ability to maintain the needed temperature in the BBADS heating section.

Figure 71: Picture of Thermal fluid System Tested with Propane Fuel

Photo Source: Altex Technologies Corporation

Tests showed that the complete heating system was operating as per design, and is functioning similar to the pilot-scale system demonstrated at UC Davis but with a much higher heating capacity.

4.2.4 Cooling System Performance Testing

A test plan was prepared for testing the performance of the new cooling sections. The purpose of these tests was to confirm the effectiveness of the cooling system. Another purpose of these tests was to determine the force required to push the logs through the heating and cooling sections. The pressure required for compression of the biomass in the compaction zone and movement of downstream logs has a significant effect on the capacity of the BBADS equipment.

The newly fabricated cooling system was installed in the BBADS equipment and tests were carried out to assess the cooling performance as per the test plan given in Table 13.

Table 13: Cooling Section Testing Plan

Material	Feeding method	Compression distance in front of gate	Hot oil temperature	Measurement to be made
1. Corn Stover	Loose, 7-8 lbs	8" (18 lbs/cf)	360°F	Water inlet temp and outlet temp, Hot oil inlet temperature and outlet temperature, pressure during different stages of log making
2. Corn Stover	Loose, 7-8 lbs	No gate	360°F	Water inlet temp and outlet temp, Hot oil inlet temperature and outlet temperature, pressure during different stages of log making

Source: Altex Technologies Corporation

Before starting the actual tests, the evaporative cooling system performance was tested without loading any biomass into the BBADS system. The evaporative cooling system was operated at full capacity and it was observed that a reduction of 42.8°F (6°C) – 46.4°F (8°C) in the cooling water temperature was possible through evaporative cooling depending on the time of day.

4.3 Results of BBADS Integration Testing

Both Alfalfa and corn stover biomass were tested. During the first test, both modular cooling sections were installed in the BBADS system. The cooling system was operated at full capacity and log production was started. During the test, it was observed that the pressure in the hydraulic system needed to push the logs forward increases as the total length of logs increases, as shown in Figure 71. These results show the importance of limiting the length of the system and the number of logs in the system.

Figure 72: Effect of Total Length of Biomass Logs in the Tube on the Pressure in the Hydraulic System

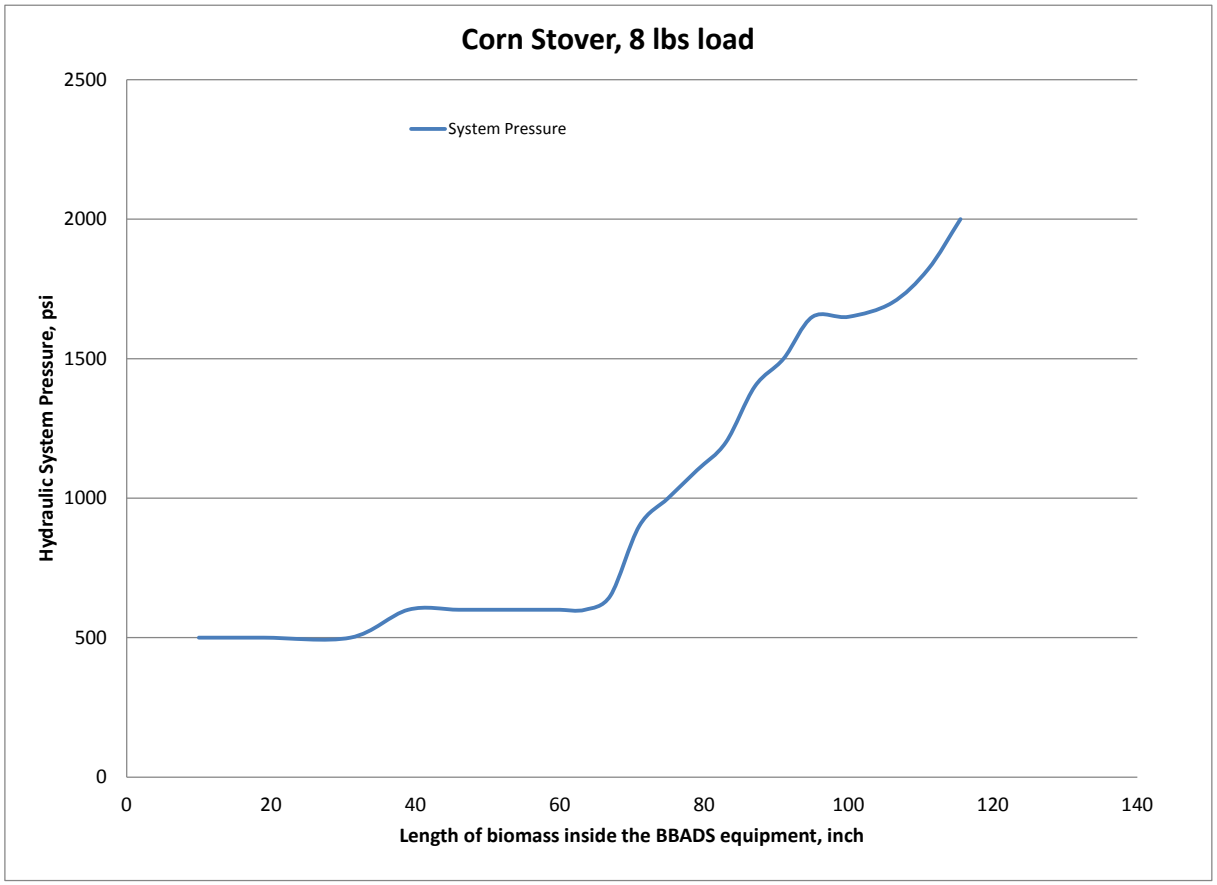

Source: Altex Technologies Corporation

The recorded pressure data was used to estimate the log friction coefficient inside the BBADS cylinder. Knowing this parameter will help to define the maximum number of logs that can be maintained in the cylinder without exceeding the hydraulic system maximum force. The axial force and stress applied on the biomass was calculated based on the hydraulic cylinder dimensions, pressure and compression sectional dimensions. A Poisson's ratio of 0.5 was assumed for compressed biomass inside the cylinder; and transverse force and shear stress on the cylindrical surface of the compression and cooling sections were estimated. The ratio of transverse stress to the axial stress is used to determine the friction coefficient. Results have shown that the friction coefficient for biomass inside the BBADS equipment is 0.02 (Table 14) for Alfalfa at an operating conditions of 380°F (193.33°C) in the heating section and 62°F (16.67°C) in the cooling section. This is a very low friction coefficient and is useful information for estimating the maximum length of logs and also number of modular cooling sections for the full-scale BBADS equipment.

Table 14: Estimation of Friction Coefficient inside the BBADS Equipment

Feed No.	Movement distance inside cylinder, inch	Recorded System Pressure, psi	No load system Pressure loss, Psi	Acutal Axial Pressure in Cylinder, psi	Axial force on pusher, lbs	Axial stress, psi	Cumulative length of logs, inch	Circumference of Cylinder, inch	Circumfrential Contact area, in2	Transverse force, lbs	Transverse stress, psi	Friction coefficient
1	10	500	325	175	6735	70.87	10	34.6	345.6	3367	9.74	0.14
2	9	500	325	175	6735	70.87	19	34.6	656.6	3367	5.13	0.07
3	12	500	325	175	6735	70.87	31	34.6	1071.3	3367	3.14	0.04
4	8	600	325	275	10583	111.36	39	34.6	1347.7	5292	3.93	0.04
5	7	600	325	275	10583	111.36	46	34.6	1589.6	5292	3.33	0.03
6	6	600	325	275	10583	111.36	52	34.6	1797.0	5292	2.94	0.03
7	6	600	325	275	10583	111.36	58	34.6	2004.3	5292	2.64	0.02
8	2	600	325	275	10583	111.36	60	34.6	2073.5	5292	2.55	0.02
9	3.5	600	325	275	10583	111.36	63.5	34.6	2194.4	5292	2.41	0.02
10	3.5	650	325	325	12507	131.61	67	34.6	2315.4	6254	2.70	0.02
11	4	900	325	575	22129	232.85	71	34.6	2453.6	11064	4.51	0.02
12	4	1000	325	675	25977	273.35	75	34.6	2591.8	12989	5.01	0.02
13	4	1100	325	775	29825	313.84	79	34.6	2730.0	14913	5.46	0.02
14	4	1200	325	875	33674	354.34	83	34.6	2868.3	16837	5.87	0.02
15	4	1400	325	1075	41371	435.33	83	34.6	2868.3	20685	7.21	0.02
16	4	1500	325	1175	45219	475.83	83	34.6	2868.3	22610	7.88	0.02
17	4	1650	325	1325	50992	536.57	83	34.6	2868.3	25496	8.89	0.02
18	5	1600	325	1275	49068	516.32	83	34.6	2868.3	24534	8.55	0.02
19	6	1700	325	1375	52916	556.82	83	34.6	2868.3	26458	9.22	0.02
20	5	1820	325	1495	57534	605.41	83	34.6	2868.3	28767	10.03	0.02
21	4.5	2000	325	1675	64462	678.31	83	34.6	2868.3	32231	11.24	0.02

Source: Altex Technologies Corporation

During the second test, the temperature of the cooling section was maintained above room temperature. This was accomplished by not running the fan motor fitted on the top of the cooling tower. This prevents evaporative cooling and maintains the water temperature at conditions where the hydraulic system pressure required for operation of the full-scale BBADS is low. Following this approach, the maximum pressure required to push the logs through the system was reduced to less than 1000 psi.

In the next tests, more than 18 bales of corn stover were processed continuously and a large number of logs were produced. The temperature of the oil entering and leaving the heating section was recorded and is presented in Figure 73. The cycle time during the log making process was adjusted to 38 seconds. Under these conditions it was possible to make acceptable quality logs.

Figure 73: Temperature Profile in the BBADS Equipment during Log Making Process

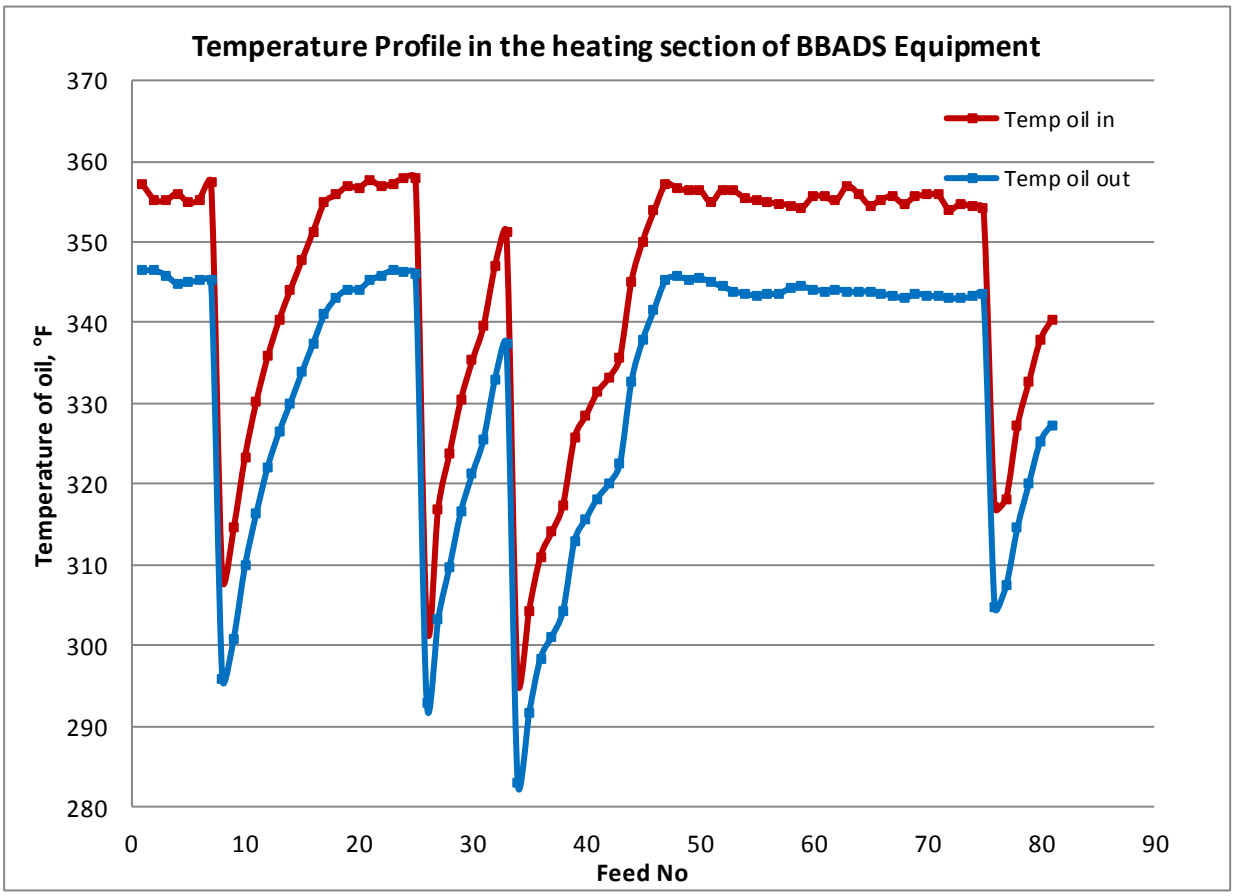

Source: Altex Technologies Corporation

The pressure recorded during the testing of the BBADS equipment using the new cooling section is shown in Figure 74. For the most part, the pressure could be controlled. The spike in pressure from 1000 psi to 2000 psi observed in the figure could be eliminated. It appears that the full scale system can be operated where pressures do not exceed limits.

Figure 74: Hydraulic System Pressure Recorded during Testing with New Cooling System

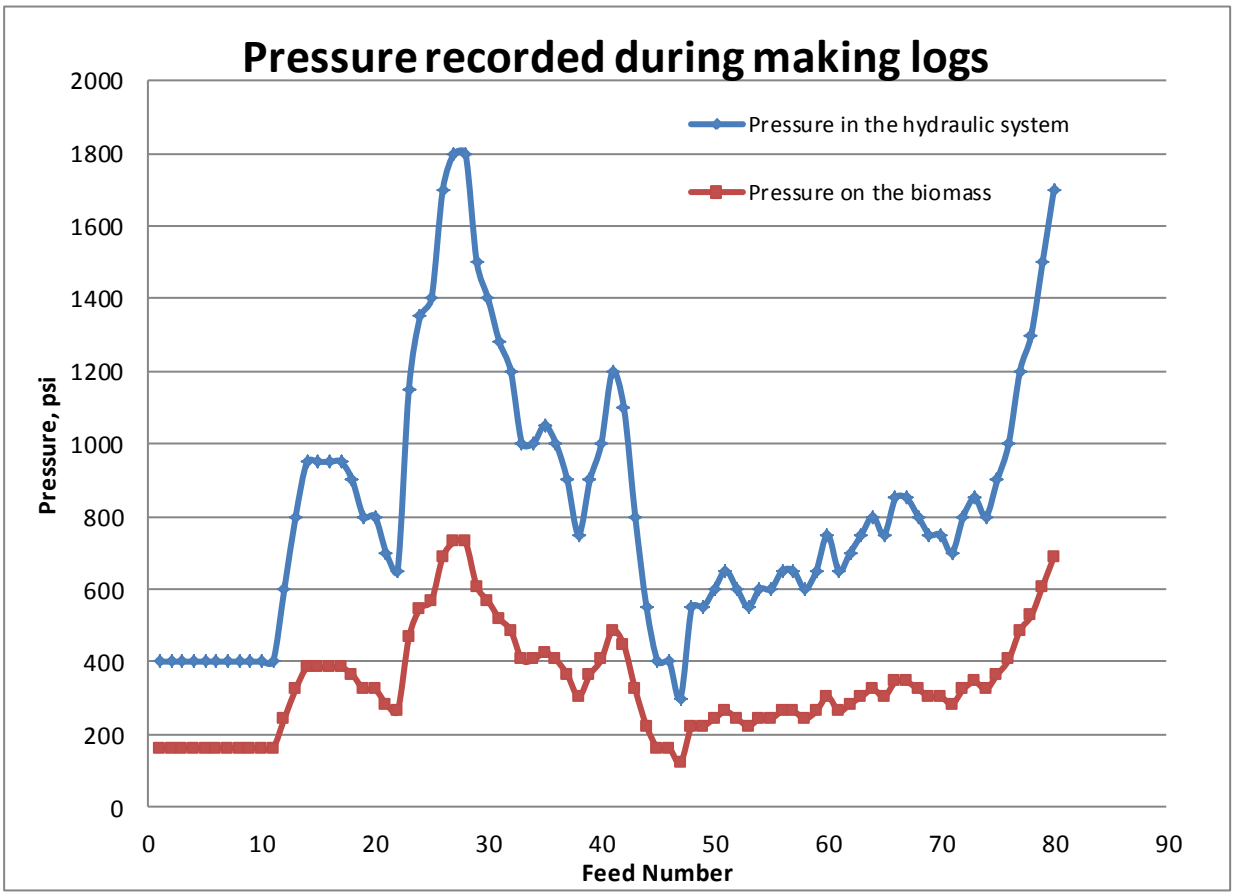

Source: Altex Technologies Corporation

To define a standard for supporting the development of the complete automatic control system, the unit was operated with actuators under individual sequencing using the computer. Initially, the BBADS system testing started with the biomass door open and the shovel and pusher at the fully retracted condition, as shown in Figure 75. During initial tests, the top cover of the biomass feeder was installed, but for visualization, the side covers were not installed, as shown in Figure 75. Once the feeder system performance was optimized, the side covers were added to eliminate any biomass spillage from feeding and to control dust.

Figure 75: BBADS Feeder Ready for Testing

Photo Source: Altex Technologies Corporation

For the first test, 20 lbs of Alfalfa were separated from bales placed on the conveyor and allowed to fall into the feeding chamber, as shown in Figure 76. The picture shows that 20 lbs of alfalfa can be easily loaded into the feeder in a loose format without any significant problem. This loading capacity is significant because the weight determines the BBADS equipment log throughput rate. In the second test, the hydraulic cylinder installed on the door was retracted and the door was closed using the manual sequence computer control program. Figure 77 shows the picture of feeder with door closed.

Figure 76: Step1: Picture Showing Feeder Filled with Biomass

Photo Source: Altex Technologies Corporation

During this test, the operability of door, and movement and compression of biomass inside the feeding compaction section were observed. Initial observations indicate that the door works as

planned with a load of up to 20 lbs of biomass in the feeding section. As the door was fully closed and the shovel cylinder was operated using the computer, the biomass inside the feeder was compressed and forced into the compaction cylinder.

Figure 77: Step 2: Picture Showing Biomass with Door Closed

Photo Source: Altex Technologies Corporation

Figure 78 shows the compressed biomass inside the main barrel of BBADS equipment with the shovel in fully extended position. As the shovel is compressing the biomass, the speed of shovel operation was recorded by the computer. The operation of shovel speed is also an important factor in determining the throughput of the BBADS equipment.

Figure 78: Step 3: Picture Showing Biomass Compressed with Shovel into the Main Barrel

Photo Source: Altex Technologies Corporation

In the final step, the biomass was compressed in the binder activation section using the piston driven by the main hydraulic cylinder. The operation of this cylinder was also controlled using the computer, and various parameters, such as speed of operation in the forward stroke, reverse stroke, and pressure requirement, were recorded by the computer for use in completing the integrated operation control software. Figure 79 shows the picture of pusher inside the main compression chamber in a fully extended position. At the end of this stroke, all of the fed biomass will be inside the binder activation zone under the required compression. As the process continues, the logs will move into the cooling section (that is, binder setting zone) and the formed logs will be ejected from the end of the BBADS equipment.

The integration of the BBADS system under individual component operation was completed for Alfalfa and the data were used to optimize various parameters, such as simultaneous operation of door and pusher, which are needed for reducing the cycle time.

Figure 79: Step 4: Picture Showing Biomass Compressed by the Pusher into the Heating Section of BBADS Equipment

Photo Source: Altex Technologies Corporation

4.4 BBADS Cylinder Rod Failure and Corrective Action

To demonstrate BBADS component operation, all of the actuators were successfully operated and controlled using the Labview computer program in manual control. Many cycles of operation were tested and operating data were collected. Having successfully completed the manual control program operation the testing shifted to fully automated control. For these tests, the engineer from West Coast Fluid Power who designed the hydraulic system was invited to witness the testing. Unfortunately, during the automated control testing, the shovel hydraulic cylinder rod broke, which then halted testing. Figure 80 shows the cylinder rod with the normally attached shovel sitting at an angle to the rod. The attachment point where the rod broke is shown at the middle of the shovel. It should be noted that the rod is designed to break at this point when overstressed to avoid damage to the expensive cylinder. On the right of the picture is the BBADS compaction cylinder. Based on post-test observations, it appeared that the nonuniform distribution of biomass behind the shovel caused the shovel to contact the side wall, which then led to the shovel rotating a small degree around the rod attachment as a result of the bending moment. Due to this small horizontal plane rotation, the opposite tip of the shovel came into contact with the pusher, resulting in the rod failure. This happened in spite of shovel position control devices included in the control program. These linear position control devices are installed in the hydraulic cylinders and sense the position of the rod relative to the pusher piston. However, given the small rotation in the horizontal plane, the shovel tip proceeded beyond the center of the shovel resulting in enough contact with the piston to cause the rod to fail. Following the failure a review meeting was held with the BBADS team to analyze and review this failure mode and develop mitigation strategies to reduce the probability of failure in the future. Based on the meeting inputs, the following mitigation strategies were recommended:

Figure 80: Picture of Shovel and Broken Shovel Cylinder Rod End

Photo Source: Altex Technologies Corporation

- Provide shovel mechanical stops in the feeding section that will positively prevent the intersection of the shovel and pusher independently from the position controllers.
- Improve the electronic control system design by adding more limit switches. This is in addition to the linear position control devices installed on the BBADS shovel cylinder that will prevent the movement of the shovel rod beyond a specified point.
- Provide horizontal shovel rollers that contact the side walls, which will prevent the lateral movement of the shovel and hard side wall contact; and thereby mitigating any bending force and rotation of the shovel.

Through the use of these strategies, this rod failure was not repeated and the unit was successfully operated in automated control mode on various types of biomass.

4.5 Evaluation of Machine Performance at Watsonville Facility

Three biomass materials were tested: agricultural residues corn stover and wheat straw, and energy crop switchgrass. Operating parameters were optimized for efficient production of acceptable log quality. Heating and cooling rate will play important roles and these parameters were varied to find the best conditions for each biomass material tested.

Figure 81 shows a picture of corn stover and wheat straw logs made during testing of the BBADS system at the Watsonville test facility. The shorter, by less than 4″ length, and less dense logs, shown to the left in Figure 81, were made during initial testing when the biomass feeder

loading was limited. At the higher loadings anticipated for standard operation, longer logs of approximately six inches are produced, as shown to the right in Figure 81. Multiple bales of corn stover and wheat straw were converted into logs. The quality of logs is similar to the logs made during the pilot-scale system testing at UC Davis. High log densities of over 35 lbm/cf have been achieved, which is similar to that achieved in prior pilot-scale tests.

Figure 81: Picture of Corn Stover and Wheat Straw Logs Made during Testing at Watsonville

Photo Source: Altex Technologies Corporation

During testing, the pressure, temperature, positions of pistons inside hydraulic cylinders, and water flow rate were recorded. Figure 82 shows the results for the pressure and linear position of pusher and shovel during testing. These data were used to optimize the BBADS system operation and throughput.

Figure 82: Graph Showing Pressure Inside the Manifold of Two Hydraulic Power Units, and Position of Pusher and Shovel During Testing

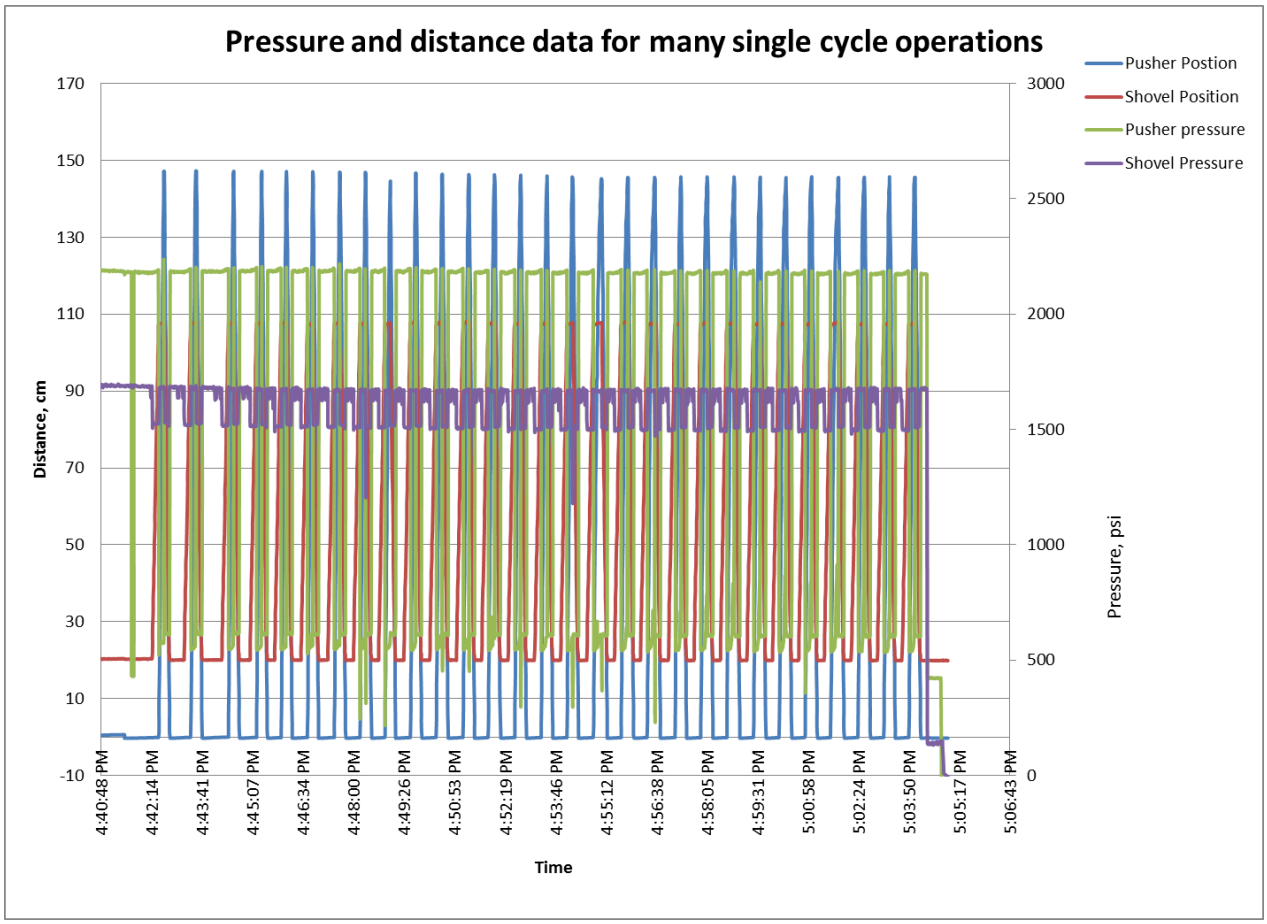

Source: Altex Technologies Corporation

Figure 83 shows the temperature of thermal fluid, cooling water, hydraulic fluid, and fuel burn rate from data collected during testing. Results showed that the system was operating at the right conditions and there were no significant operational problems. These data were also useful for tuning the control system for operation under fully automated conditions. These test results indicated that the system was ready for field testing.

Figure 83: Graph for Data Collected on Thermal Fluid Temperature, Water Temperature, Hydraulic Fluid Temperature, Burner Flow Rate

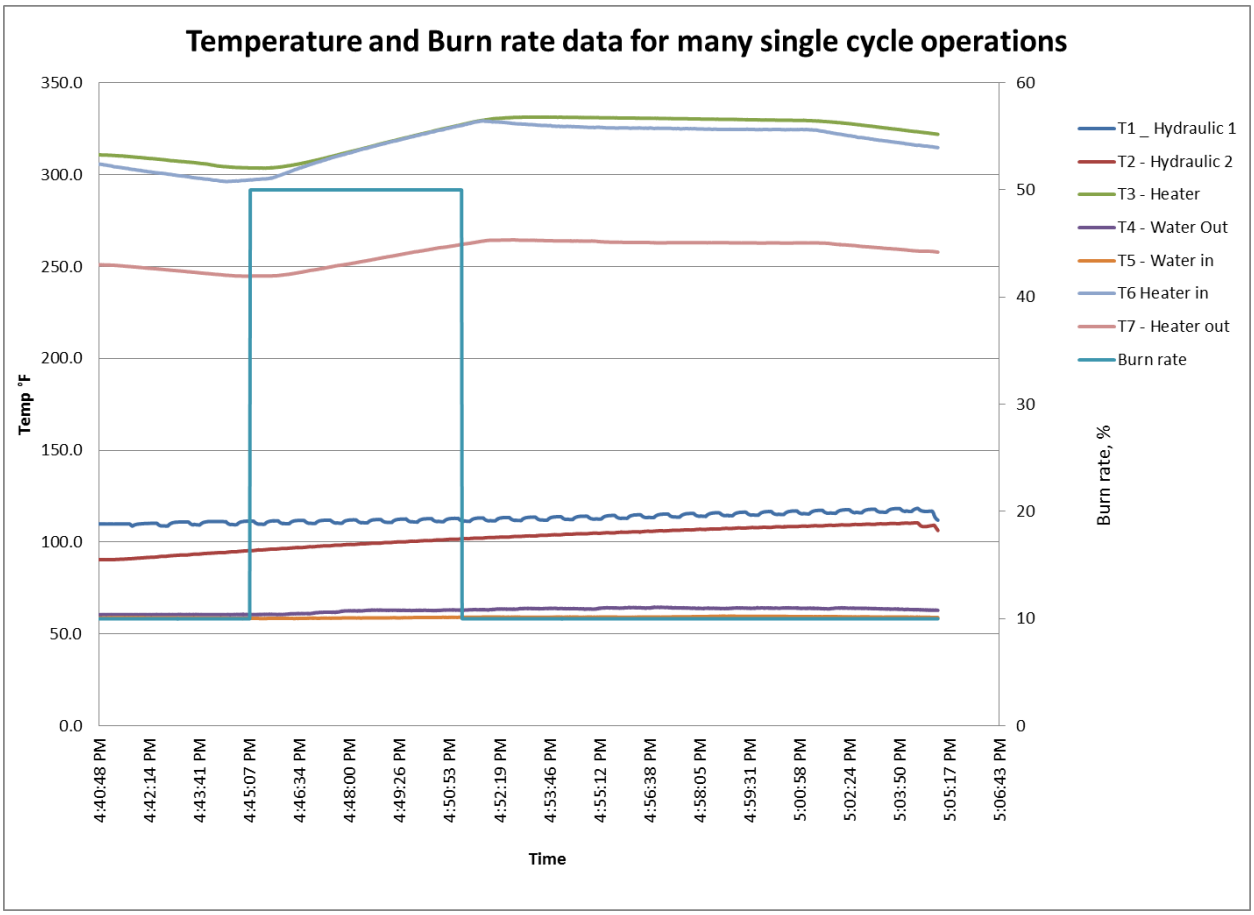

Source: Altex Technologies Corporation

CHAPTER 5:
Field Testing

The goal for this task is to demonstrate the full-scale BBADS equipment and to prove the technical performance of BBADS technology for adoption in the biofuel, co-firing, and animal feed markets.

Specific objectives for this task included:

- Evaluate the operation and performance of the BBADS control unit.
- Evaluate the machine performance during feeding of different baled biomass materials at the proper rate.
- Evaluate the log product through size reduction studies, drop tests and laboratory analytical tests.
- Carry out measurement and verification activities supported by a third party company.

5.1 Development and Installation of Electronic Control Unit

The novel control system development and installation for the field tests was initiated at Altex. The electronic circuit diagram for the controls system incorporated all the transducer electronic signals for the measurement of pressure, load, linear position, water flow, and so forth Electronic signals are collected by the control system from the solenoids of the hydraulic system's flow control devices manifold that control six different hydraulic actuators and their operating sequences. They are also collected by starting and running all the electric motors used in the full-scale BBADS equipment. The electronic control circuit diagram was used to prepare the parts BOM required for development of the control system.

All the components specified in the BOM were purchased and installed in the DIN rails, as shown in Figure 84. The main electrical control unit consists of one National Instrument's cDAQ module, two 24 V power supplies (one separately for the cDAQ module), non-fuse load switches, industrial slim relays, electrical overload relays and contactors for different motors in the BBADS system, and emergency switches.

Figure 84: Electrical Control Panel (left) and Electrical Control Box (right) for BBADS Equipment

Photo Source: Altex Technologies Corporation

After mounting the components in the Din rails, wiring work was completed. Figure 85 (top left) shows all installed electrical and electronic components needed for the control of the BBADS system on a control board. This control board was then installed inside the control box as shown in Figure 85 (top right). After installation of the board, the push button switches and knob switches were installed on the door of the control box, as shown in Figure 85 (bottom left). The control box was also built with a power and data outlet, as shown in Figure 85 (bottom right), for connecting the laptop required for operation and control.

Figure 85: Pictures of (a) All the Electrical Components Installed on the Board (top left) (b) Electrical Board Installed inside the Control Box (top right) (c) Fully Developed Control Box (bottom left) (d) Electrical Outlet for Computer and Data Cable Connection

Photo Source: Altex Technologies Corporation

After development of the control system, it was tested in the lab before installation, using the laptop computer. Figure 86 shows a picture of the control system connected with the computer during testing. During lab testing, the control system was tested by connecting indicator lights between connections using the labVIEW control program developed for this purpose.

Figure 86: Picture of Testing of cDAQ Modules and Other Components before Installing on the BBADS Equipment

Photo Source: Altex Technologies Corporation

Data acquisition and various subsystem operational controls of the BBADS system were achieved using a National Instruments cDAQ modules and labVIEW software installed on the laptop computer. Initially, the labVIEW program coding for data acquisition from various transducers was tested for operation and control of the hydraulic system solenoid valves, linear position sensor devices in the feeder, and temperature controller in the heating system. The front panel and the block diagram of the Labview program, developed for data acquisition and control, are shown in Figures 87 and 88, respectively.

Figure 87: Front Panel Window of the labVIEW Program of Full-Scale BBADS Equipment

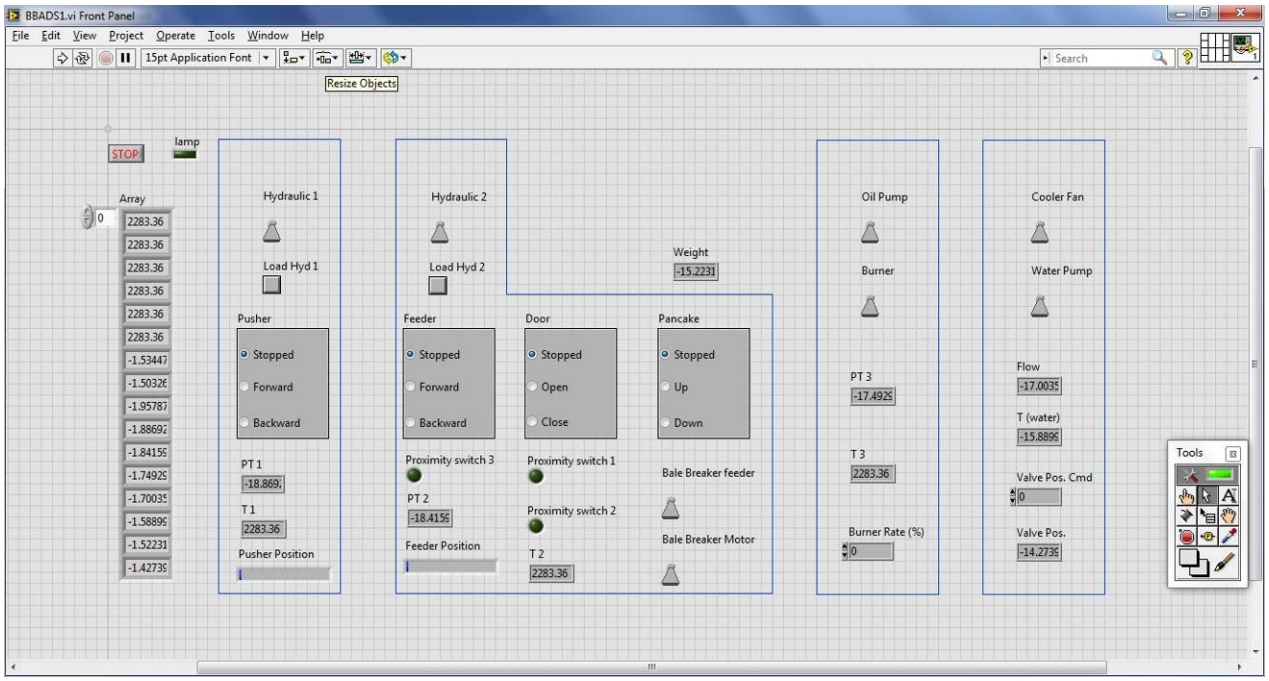

Photo Source: Altex Technologies Corporation

Figure 88: Block Diagram of labVIEW Program Developed for Full-Scale BBADS Equipment

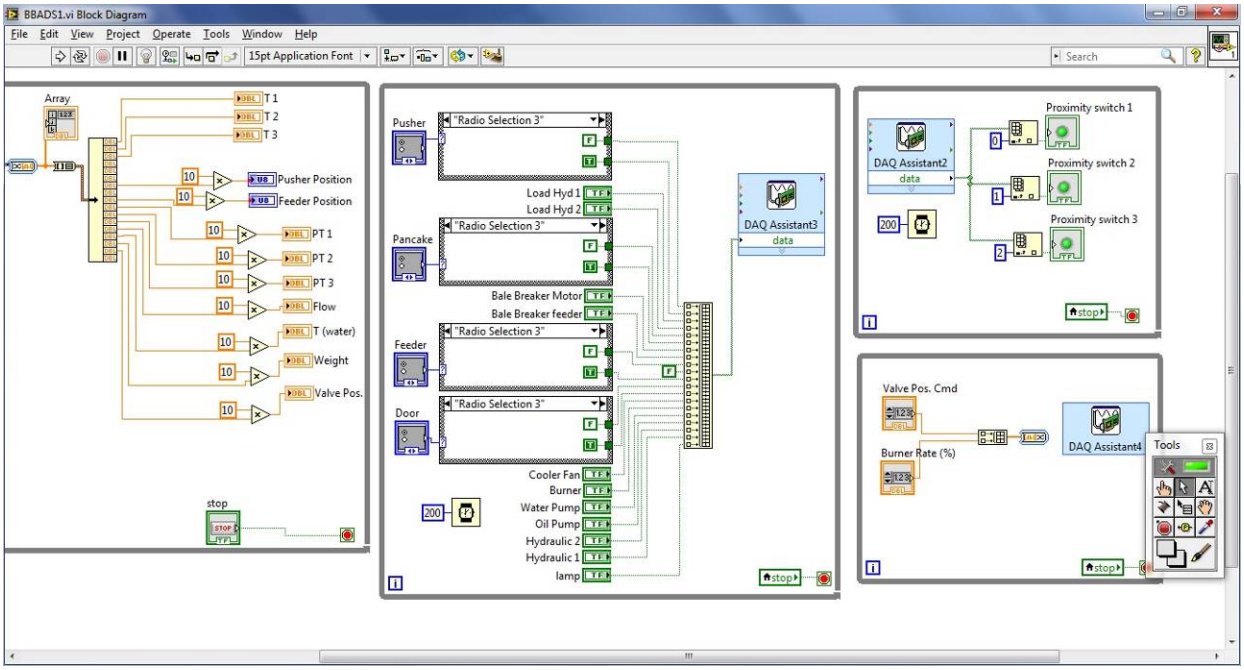

Photo Source: Altex Technologies Corporation

After testing the Labview program for data acquisition and control in the lab, it was upgraded to incorporate manual, semi-automatic and fully-automatic modes, and evaluated under simulated field conditions. In the manual mode, each actuator can be controlled manually. In semi-automated control, the BBADS system can be controlled for a single cycle (comprised of feeding, door closing, compression using shovel, and final compression) and in the fully-automated mode, the BBADS system was continuously operated by including a looping mode.

5.2 Installation of Linear Position Control Devices

Energy efficient compression of biomass requires the main hydraulic cylinder to operate at two different speeds. In the first compression stage, biomass has to be compressed at low pressures of 600 psi at a forward speed of 10”/second. Following this stage, the compressed biomass has to be compressed at 2000 psi at a speed of 1”/second. For this purpose, a magnetic position control device was installed on the side of the hydraulic cylinder to allow this two-speed pusher operation. The position of the shovel cylinder also has to be determined for proper control of the BBADS operating sequence.

5.3 Installation of Flow Meter and Mixing Valve in the Cooling Section

In testing of the pilot-scale BBADS, a dry cooling system was utilized and the minimum cooling section temperature attainable was above ambient dry bulb temperature. In the full-scale BBADS equipment, evaporative cooling is used for setting the binder. Hence, the cooling section temperature can be maintained at 44.6°F (7°C) below ambient dry bulb temperature. This improves the rapid setting of binder but also affects the pressure in the BBADS equipment. In order to effectively control the pressure in the system, the temperature of the cooling section will be maintained using a mixer valve and a flow meter. Figure 89 is a picture of the flow meter installed in the cooling section.

Figure 89: Installation of Flow Meter and Mixing Valve in the Cooling Section

Photo Source: Altex Technologies Corporation

5.4 Installation and Testing of Transducers in the Cooling Section

The cooling system requires installation, integration, and testing of the motorized three-way valve. Figure 90 shows the picture of the motorized three-way valve installed in the BBADS cooling section.

Figure 90: Picture of Motorized Three-Way Valve Installed for Controlling the Pressure inside the Main Cylinder

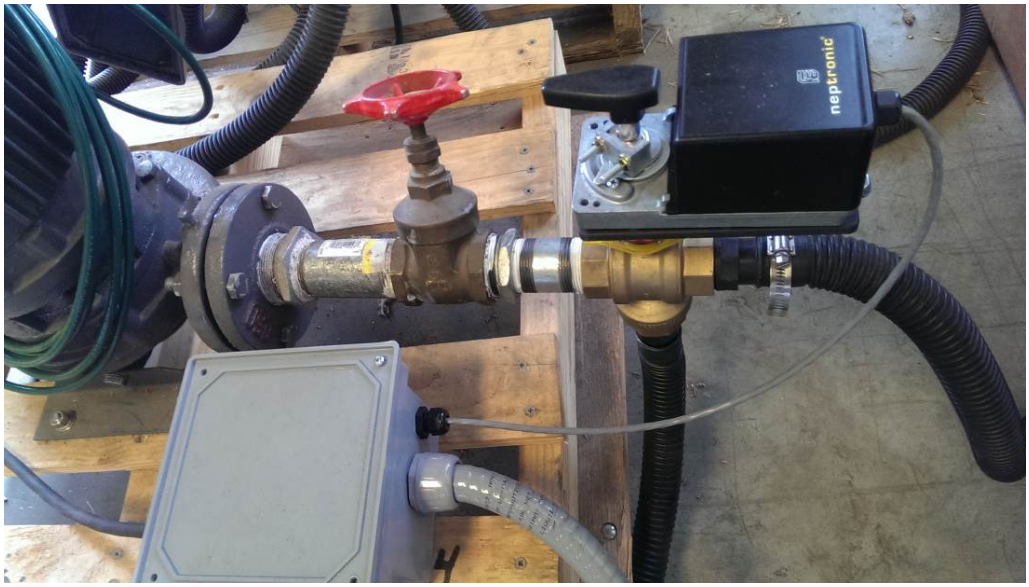

Photo Source: Altex Technologies Corporation

5.5 Installation and Testing of Transducers in the Compression System

Figure 91 shows a picture of pressure and temperature transducers installed in hydraulic power unit 1 of the BBADS equipment. The monitoring of hydraulic fluid temperature was used to optimize the operation of the hydraulic power unit. The pressure in the hydraulic power unit is used to control the operation of the motorized three-way valve in the cooling section.

Figure 91: Picture of Pressure and Temperature Transducers Installed on the Hydraulic System of BBADS System

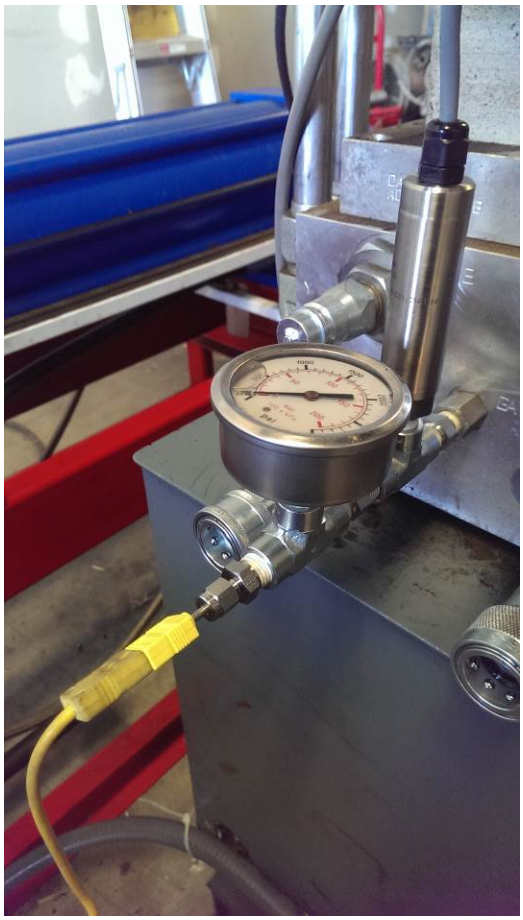

Photo Source: Altex Technologies Corporation

5.6 Installation and Testing of Transducers in the Heating System

The heating system has pressure transducers to measure and control the pressure of heating fluid in the BBADS heating section. It also has thermocouples to measure the temperature of the heating oil. Figure 92 shows a picture of pressure transducers and thermocouples installed in the BBADS thermal fluid system. The pressure and temperature input from these transducers were used to control the operation of the oil heater burner, and maintenance of the oil temperature in the heating section of the BBADS equipment.

Figure 92: Pressure and Temperature Transducers Installed in the Thermal Fluid System for Fully Automated Control of the BBADS System

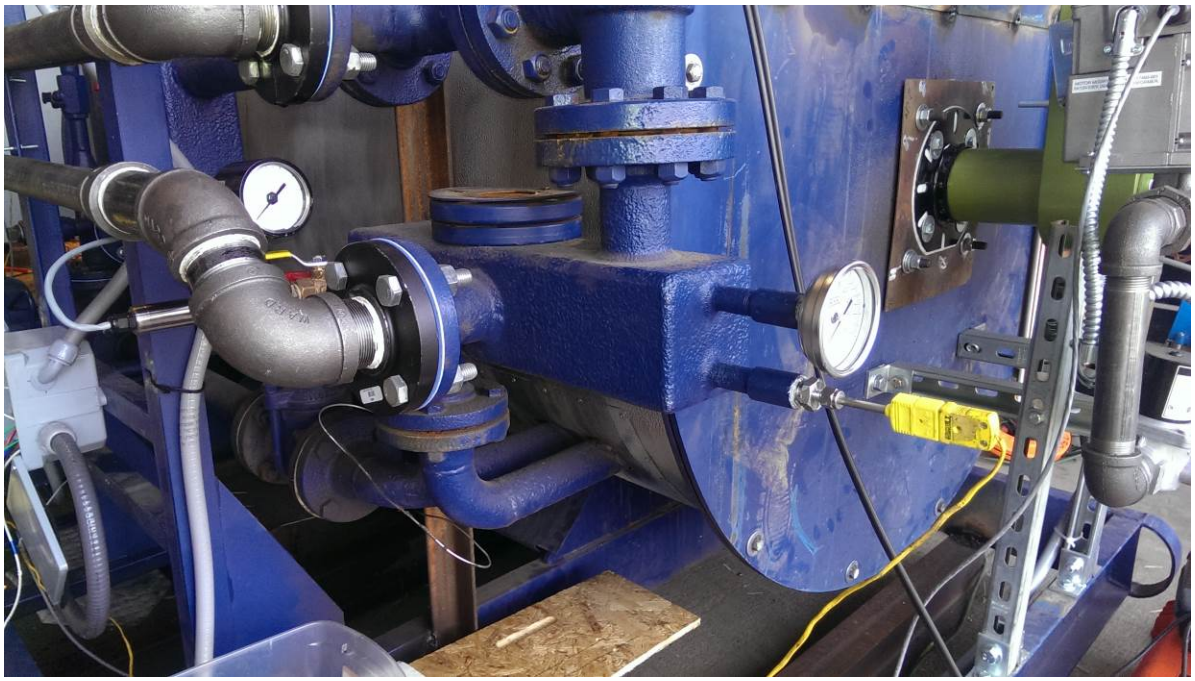

Photo Source: Altex Technologies Corporation

5.7 Decommissioning of BBADS Subsystems and Transport to UC Davis

The shipping of BBADS equipment to UC Davis started on the 26th of June. It was decided to load the feeder, two hydraulic power units, evaporative cooler with pump, control cabinet, and cooling section of the BBADS equipment onto one truck with the compaction section, feeding table, and hot oil system loaded on the other truck for transport to UC Davis. All the electrical wires were labelled properly so that the system can be easily reinstalled at UC Davis. Figure 93 shows the BBADS equipment that was decommissioned at Altex's Watsonville facility, transported on two trucks and arranged at the Agronomy Center of UC Davis with components ready to be reconnected.

5.8 Field Test Installation Activities

5.8.1 Installation of Fuel Supply System

Arrangements were made to obtain the propane fuel supply both at the Altex Watsonville facility and UC Davis through AmeriGas Company. This company has provided the propane cylinder for testing at Watsonville. The Manager of AmeriGas Company at Davis, CA inspected the site at UC Davis and checked the safety requirements and provided the propane Trap wagon that was installed on the test site for demonstration activities. The high pressure and low pressure control valves designed per National Fluid Power Association and American Society of Mechanical Engineers requirements were provided by AmeriGas along with a 500 gallon propane fuel supply tank.

5.8.2 Installation of Electric Generator

The electric power supply needed for the operation of the full-scale BBADS system was provided using a 150 KVA electric generator. Since the control system developed for the BBADS system utilizes one 3 Phase electric current input to the control box, the full-scale BBADS system was easily integrated with the 150 KVA generator. Wiring work needed for integrating and energizing different motors, control cabinet, transducers with generator were completed under this task. All of the re-plumbing work needed for installation of hot oil flow lines, cooling water flow lines, and so forth was completed. The two hydraulic power systems were also integrated using the quick disconnects, and the field demonstration was then carried out.

Figure 93: Picture of BBADS Equipment Installed at UC Davis

Photo Source: Altex Technologies Corporation

Before installing and carrying out the demonstration activities, Warren Energy Engineering, the project M&V Company, was contacted. Arrangements were made to install a data logging type Wattmeter to record the BBADS electric power consumption during the entire test evaluation period under Warren Energy Engineering.

5.9 Evaluation of BBADS Performance at UC Davis

5.9.1 BBADS Testing

The testing and performance evaluation of BBADS equipment was carried out at UC Davis from June 27, 2014 to August 18, 2014. One of the important factors affecting the density of logs produced with BBADS equipment is the compression pressure applied on the logs inside the heating and cooling sections. In the pilot-scale BBADS equipment, the required pressure was

applied on the biomass by compressing the biomass against the gate while heating the material. During testing of the full- scale BBADS system, it was determined that the required back pressure conditions on the biomass can be achieved reliably without having to activate the gate. By not using the gate, the gate actuation timescale is eliminated and gate reliability and maintenance issues are avoided. These attractive operating conditions were refined by testing, and the automatic control program performance was improved based on the field tests at UC Davis. Field testing began with wheat straw as the feedstock. Once logs of the needed density and configuration were successfully produced with wheat straw, the feedstock was shifted to switchgrass. Quality and dense logs were also produced with switchgrass; and thereby demonstrating successful operation of the unit on both an agricultural residue and an energy crop. Sufficient logs were produced to evaluate product quality, as will be described below.

Initially, a field test plan was created to study BBADS machine performance under field conditions. Test conditions that maximize the binder activation and setting conditions were finalized and tests were carried out as planned. It should be noted that there is a significant difference in weather conditions between the Watsonville and UC Davis test sites. In addition, at UC Davis the demonstration activities were carried out in an open environment condition, unlike the protected testing activities at Watsonville. The average peak temperature at Watsonville was below 85°F (29.44°C) during testing. The monthly average maximum temperature at UC Davis during July was 94°F (34.44°C), with a peak temperature of 114°F (45.56°C) (Figure 94). There was also a significant difference in atmospheric humidity between Watsonville and UC Davis. The percent humidity at UC Davis during this period was in the low 20's, with dew point temperatures in the range of 50°F (10°C) to 55°F (12.78°C). Since the BBADS uses an evaporative type cooling system, the low humidity conditions at UC Davis reduced the temperature of the cooling section to the dew point and good quality logs were produced even at the high ambient air temperature. These logs were similar to those produced in the Watsonville facility. These test results show that the BBADS equipment can produce good logs in a depot type covered facility or in the open at a farm.

Figure 94: Temperature Conditions at UC Davis during July – August 2014

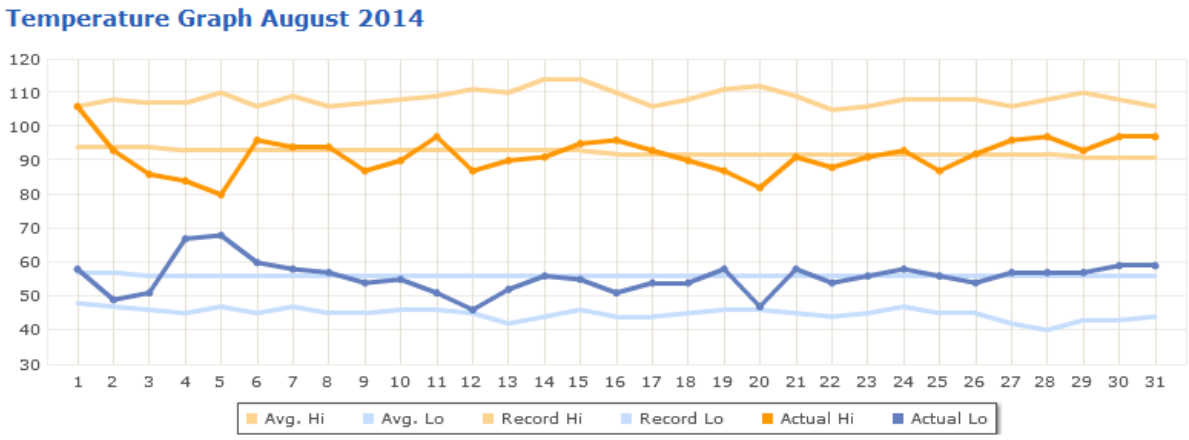

Source: Altex Technologies Corporation

In addition to demonstrating the performance and capacity of BBADS equipment under continuous operation, measurement and verification testing was also carried out at UC Davis. Electric energy and thermal energy needed for making logs were measured by the M&V Company, Warren Energy Engineering. The measurement and verification report is a separate report. However, several results of the M&V work are described below.

5.9.2 Measurement and Verification Work

5.9.2.1 Objective of M&V Work

The objective of this work was to measure BBADS electricity and thermal energy consumption during log making to determine the specific energy usage of BBADS equipment. For these tests, wheat straw was used as the biomass feedstock.

5.9.2.2 Measurement Equipment

- Electricity: True kW monitoring equipment (DENT ELITE pro meter) provided by Warren Energy Engineering.
- Propane consumption: Waukee flo-meter Type MV-9 installed by Altex.
- Weight of logs: Top pan weighing scale provided by Altex.

5.9.2.3 Testing Procedure

The electricity consumption and fuel gas consumption were measured under the following conditions:

1. Making logs with a six second feeding interval. (system using both electricity and propane)
2. Making logs with an eight second feeding interval. (system using both electricity and propane)

3. The unit is idling with hydraulics loaded. (electricity only)
4. The unit is idling with hydraulics unloaded. (electricity only)
5. Only the feeder and the conveyor are running. (electricity only)
6. Only the shovel is running. (electricity only)
7. Only Power Unit 1 is running. (electricity only)
8. Only Power Unit 2 is running. (electricity only)
9. Only the thermal fluid heater pump is running. (electricity only)
10. Only the cooler is running. (electricity only)

5.9.2.4 Salient Findings

The following are the electrical and thermal energy requirements for making logs based on the M&V work carried out at UC Davis. These results were taken directly from the M&V report.

Table 14b: Electrical and Thermal Requirements

Production Rates	*6-second feed*	*8-second feed*	*Units*
Average Throughput	1,004	1,004	lb/hr
Max Measured Throughput	1,710	1,710	lb/hr
Anticipated Throughput	4,000	4,000	lb/hr
Measured Usage			
Average Electrical Demand	48.99	49.17	kW
Average Gas Demand	200,319	200,319	BTU/hr
Electrical Usage per Ton			
Electrical Usage per Ton (at average throughput)	98	98	kWh/ton
Electrical Usage per Ton (at max measured throughput)	57	58	kWh/ton
Electrical Usage per Ton (at anticipated throughput)	24	25	kWh/ton
Electrical Usage BTU Equivalent			
BTU Equivalent per Lb (at average throughput)	167	167	BTU/lb
BTU Equivalent per Lb (at max measured throughput)	98	98	BTU/lb
BTU Equivalent per Lb (at anticipated throughput)	42	42	BTU/lb
Fuel Usage per Ton			
Fuel Usage per Ton (at average throughput)	200	200	BTU/lb
Fuel Usage per Ton (at max measured throughput)	117	117	BTU/lb
Fuel Usage per Ton (at anticipated throughput)	50	50	BTU/lb
Total Energy			
Total Energy (at average throughput)	**366**	**367**	**BTU/lb**
Total Energy (at max measured throughput)	**215**	**215**	**BTU/lb**
Total Energy (at anticipated throughput)	**92**	**92**	**BTU/lb**

Based on the published literature, the electrical energy requirements for the pelletization process are 179.9 kWh/ton and the cubing process was 26 kWh/ton.

5.10 Product Evaluation

Use of BBADS dense logs in fuels conversion requires that the logs be reduced in size ahead of transporting the biomass material into biofuels conversion reactors or boilers for cofiring applications. Therefore, tests were run to characterize the size reduction of BBADS logs. In addition, log composition and energy density were characterized. Lastly, logs were dropped from a 10 foot height onto a concrete pad to assess log durability when handled.

5.10.1 Size Reduction

Log size reduction was carried out in two steps. In the first step, the logs were reduced to 2″ cubes in the Altex laboratory and the resulting cubes were further size reduced by Hazen Research to the required size particles for conversion reactors using an available hammer mill. Hazen provides this sizing service on a commercial basis.

The size reduction of logs into 2″ cubes was carried out at Altex using a continuous shear blade, and the electrical energy needed for log size reduction was recorded. The specific energy required for size reduction was estimated to be less than 2 kW-hr/ton, which is very low compared to other types of size reduction equipment. This low energy requirement is very close to the published value of energy required for an efficient linear grid size reduction system. The biomass cubes were sent to Hazen Research for further size reduction to particles of less than 1/8″. The tests were completed using a JP Hammer mill and the detailed size reduction results are given below. The ground material from Hazen Research was received at Altex and was used to determine its biofuel production potential.

5.10.1.1 Particle Sizing Results

For most of the biomass conversion processes, a top size of 1/8 inch (six mm) is of interest. There are many different types of size reduction equipment that could be utilized. Most of the approaches require two steps. Altex has identified innovative size reduction equipment that can reduce biomass to the proper size in a single step, with reduced energy requirements using a shear type cutting mechanism. However, this technology is not yet fully developed at this stage. Hence, BBADS logs were first cut into 2″ cubes at Altex using single shear blade cutting. This type of cutting is similar to an advanced shear cutting method that would use multiple and closely spaced blades to size the material. This type of device is illustrated in Figure 95. These cubes were then shipped to Hazen Research for grinding in a hammer mill to the final size.

Figure 95: Schematic of Advanced Shear Size Reduction Device

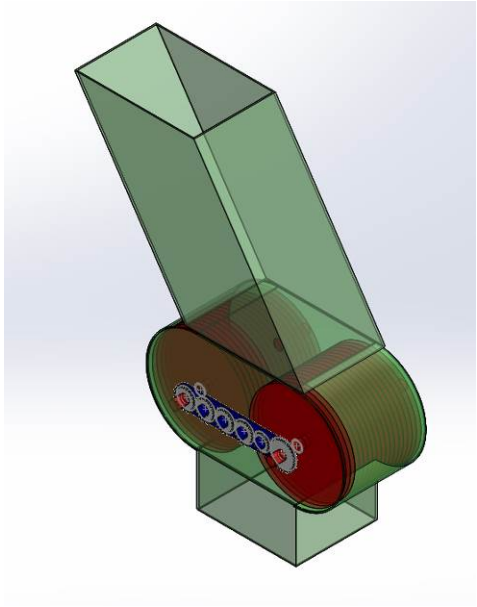

Source: Altex Technologies Corporation

Because size reduction is by shearing in this device, the energy for this approach is lower than typical grinding methods. Given high energy efficiency, a one-step shear-based size reduction approach is of high interest for BBADS log size reduction.

To further reduce biomass size, the cubed biomass material was sent to Hazen Research to be processed in their laboratory hammer mill. The objective of the tests was to determine a grinding curve for 100 percent passing 1/8″ and to determine the power requirements for grinding the biomass material. Three grind curve tests were performed using 1.0 kg charges from each biomass sample. For the power consumption tests, two kg to five kg samples were used.

5.10.1.2 Equipment Specifications

For grinding the biomass, a hammer mill manufactured by Jay Bee Mfg., Inc. with the following specifications was used:

- Model: 3BW Hammer mill with fan
    - Throat dimensions: 10″ x 4″
    - 60 hammers (1/8″ width)
    - 1/8″ screen
    - 10 ton/hour capacity
    - 20 HP motor

Two different scales were used for measuring the biomass samples. To determine the mass of each test charge prior to milling, a 100 kg capacity scale (Ohaus Corp.) was used due to the initial weight of the sample and the pan in which it was weighed. The samples collected post-milling were much smaller compared to the original charge, so a smaller bench scale was used (4.5 kg capacity Mettler).

- Make: Ohaus Corporation
    - 100 kg capacity
    - MN: T51P
    - SN: B3200319481
- Make: Mettler Toledo Corporation
    - 4.8 kg capacity
    - MN: SB24001

After completion of all experiments, a particle size distribution analysis was performed on the milled material using screens and a sieve shaker.

- Gilson Company, Inc. sieve shaker
    - MN: SS-12R
    - SN: 4971

The screens for the sieve shaker were manufactured by Thermo Fisher Scientific, Inc. Lastly, a multimeter was used during the power consumption tests to measure the hammer mill's amperage and voltage.

- Make: Ideal Industries, Inc.
    - Model: 61-704

5.10.1.3 Grinding Results – Corn Stover

A total of three grinding tests were successfully completed. The milling of the biomass required less time than was originally anticipated. It was expected that the initial stage of the grinding tests would be stopped after two minutes; however, it was clear that all the material could be processed in this interval. Each experiment used only one kg charge, and the mill could grind the entire sample to near 100 percent passing 1/8" in less than one minute. Following this result, two additional grinding attempts were performed to determine the optimal time interval for operation of the mill, which allowed construction of grinding curves. From these initial attempts, it was decided that 10-20 seconds should be allowed between each grinding stage in order to allow for a reasonable percentage-passing-screen measurements.

The experiments were repeated and found to be consistent with approximately 75 percent of the material ground after 15 seconds, 90 percent ground after 30 seconds, and 98 percent ground

after 60 seconds. The results of the three grinding tests are shown in Table 15 to Table 17 and Figure 96 to Figure 98 below:

Table 15: Corn Stover Grinding Test 1 Results

Starting Mass (g)		999.8
Time	**Unground Mass (g)**	**% Passing**
10	261.3	73.9%
30	88.8	91.1%
58	14.8	98.5%
82	4.2	99.6%

Source: Altex Technologies Corporation

Figure 96: Corn Stover Grinding Test 1 Results

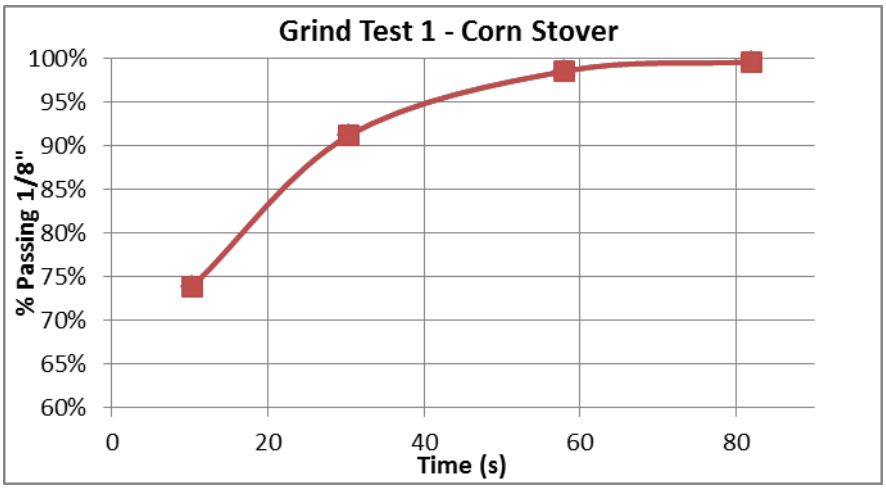

Photo Source: Altex Technologies Corporation

Table 16: Corn Stover Grinding Test 2 Results

Starting Mass (g)		999.3
Time	**Unground Mass (g)**	**% Passing**
20	195.8	80.41%
40	65.6	93.44%
68	5.8	99.42%

Source: Altex Technologies Corporation

Figure 97: Corn Stover Grinding Test 2 Results

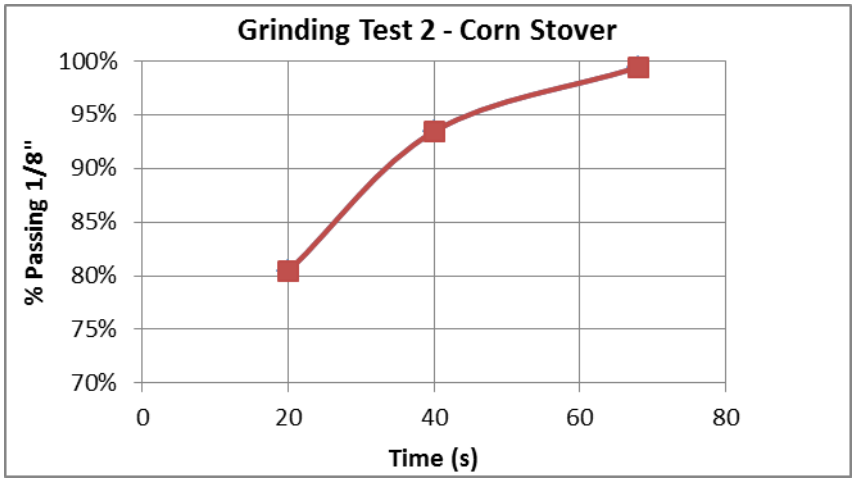

Photo Source: Altex Technologies Corporation

Table 17: Corn Stover Grinding Test 3 Results

Starting Mass (g)		1002.1
Time	**Unground Mass (g)**	**% Passing**
10	208.6	79.2%
21	73.0	92.7%
42	6.8	99.3%
61	3.6	99.6%

Source: Altex Technologies Corporation

Figure 98: Corn Stover Grinding Test 3 Results

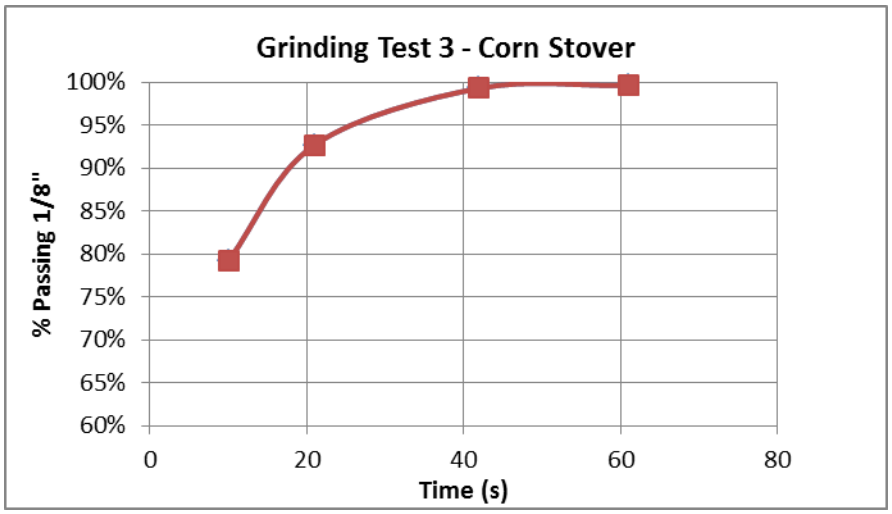

Photo Source: Altex Technologies Corporation

5.10.1.4 Grinding Results – Switchgrass

Three grinding tests were successfully completed using switchgrass. Similar to the corn stover grinding tests, the mill was able to grind the entire sample to near 100 percent, passing 1/8" in less than one minute. From the corn stover tests, it was determined that approximately 10-20 seconds should be allowed between each percentage passing screen measurement. Upon review, the results indicate that the switchgrass is more quickly milled than corn stover. Each repetition displayed fairly similar results, approximately 85 percent of the material ground after 20 seconds, 97 percent ground after 40 seconds, and 99 percent ground after 60 seconds. The results of the three grinding tests are depicted in Table 18 to Table 20 and Figure 99 to Figure 101 below:

Table 18 Switchgrass Grinding Test 1 Results

Starting Mass (g)		**1000.0**
Time	**Unground Mass (g)**	**% Passing**
18	213	78.7%
39	90	91.0%
69	16	98.4%

Source: Altex Technologies Corporation

Figure 99: Switchgrass Grinding Test 1 Results

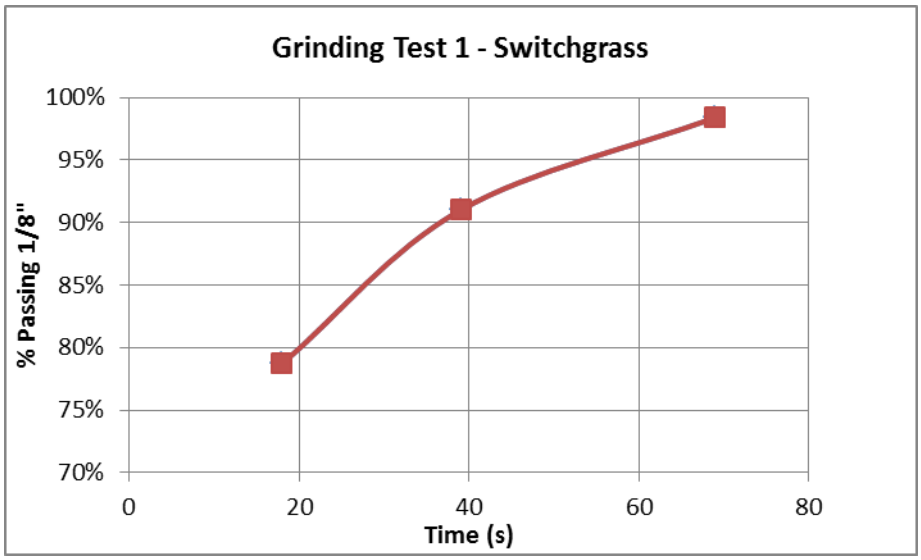

Source: Altex Technologies Corporation

Table 19: Switchgrass Grinding Test 2 Results

Starting Mass (g)		1000.0
Time	**Unground Mass (g)**	**% Passing**
22	117	88.3%
43	25	97.5%
71	4	99.6%

Source: Altex Technologies Corporation

Figure 100: Switchgrass Grinding Test 2 Results

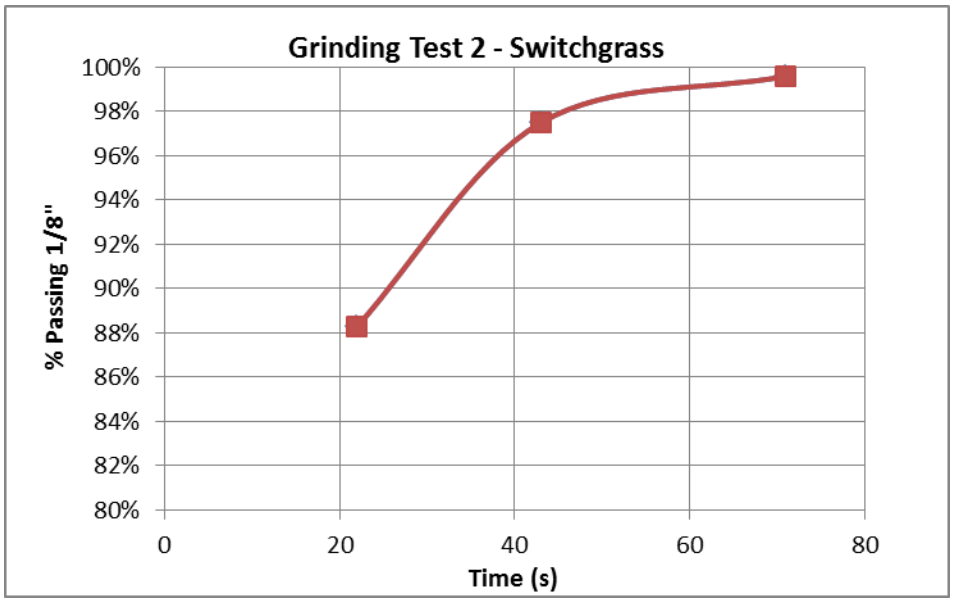

Source: Altex Technologies Corporation

Table 20: Switchgrass Test 3 Results

Starting Mass (g)		1000.0
Time	**Unground Mass (g)**	**% Passing**
23	136	86.4%
41	31	96.9%
64	1	99.9%

Source: Altex Technologies Corporation

Figure 101: Switchgrass Grinding Test 3 Results

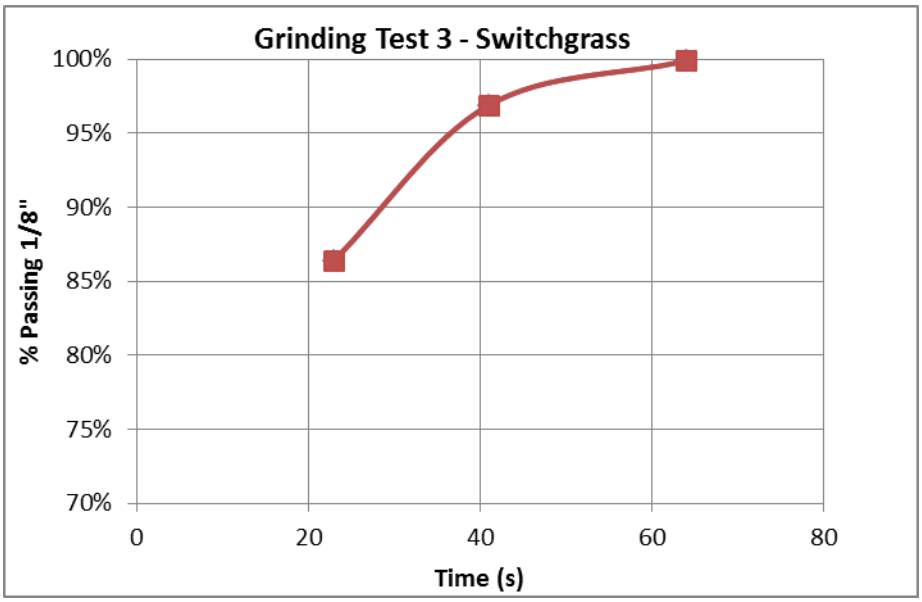

Photo Source: Altex Technologies Corporation

5.10.1.5 Grinding Results – Wheat Straw

Three grinding tests were successfully completed using wheat straw. Similarly to the other two samples, the mill was able to grind the entire wheat straw sample to near 100 percent passing 1/8" in less than one minute. From the corn stover tests it was determined that approximately 10-20 seconds should be allowed between each percentage passing screen measurement. The results indicate that the wheat straw is more quickly milled than the corn stover. Each repetition displayed fairly similar results to the switchgrass tests with approximately 85 percent of the material ground after 20 seconds, 97 percent ground after 40 seconds, and 99 percent ground after 60 seconds. The results of the three grinding tests are shown in Table 21 to Table 23 and Figure 102 to Figure 104 below.

Table 21: Wheat Straw Grinding Test 1 Results

Starting Mass (g)		1000.0
Time	**Unground Mass (g)**	**% Passing**
21	143	85.7%
40	37	96.3%
63	4	99.6%

Source: Altex Technologies Corporation

Figure 102: Wheat Straw Grinding Test 1 Results

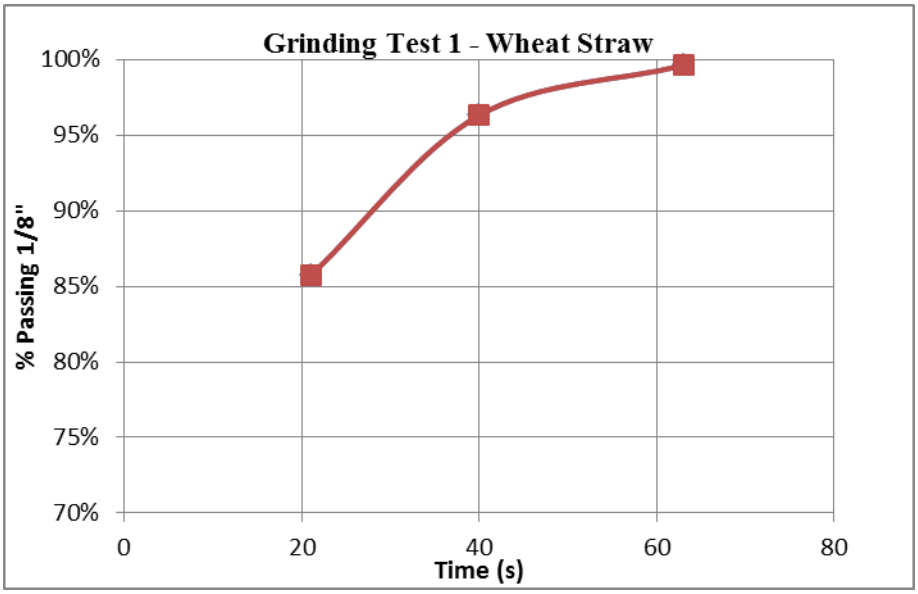

Source: Altex Technologies Corporation

Table 22: Wheat Straw Grinding Test 2 Results

Starting Mass (g)		1000.0
Time	**Unground Mass (g)**	**% Passing**
16	206	79.4%
40	58	94.2%
63	4	99.6%

Source: Altex Technologies Corporation

Figure 103: Wheat Straw Grinding Test 2 Results

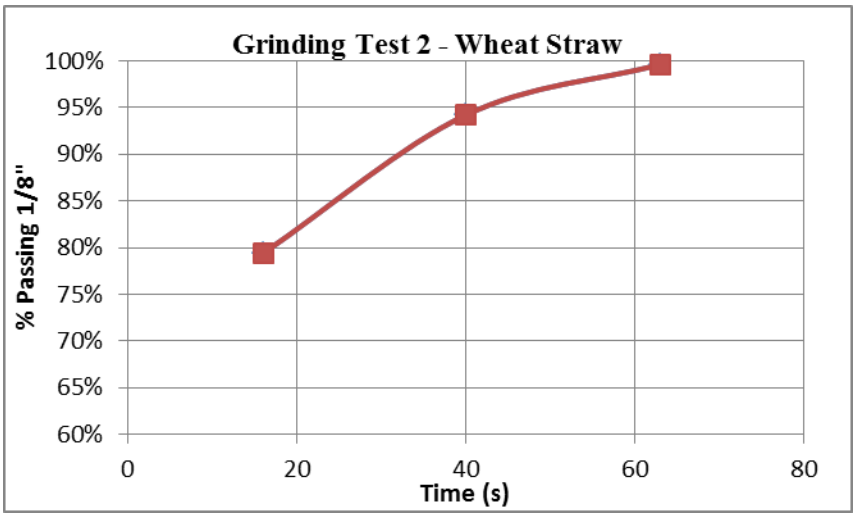

Source: Altex Technologies Corporation

Table 23: Wheat Straw Grinding Test 2 Results

Starting Mass (g)		1000.0
Time	**Unground Mass (g)**	**% Passing**
21	159	84.1%
43	31	96.9%
70	5	99.5%

Source: Altex Technologies Corporation

Figure 104: Wheat Straw Grinding Test 3 Results

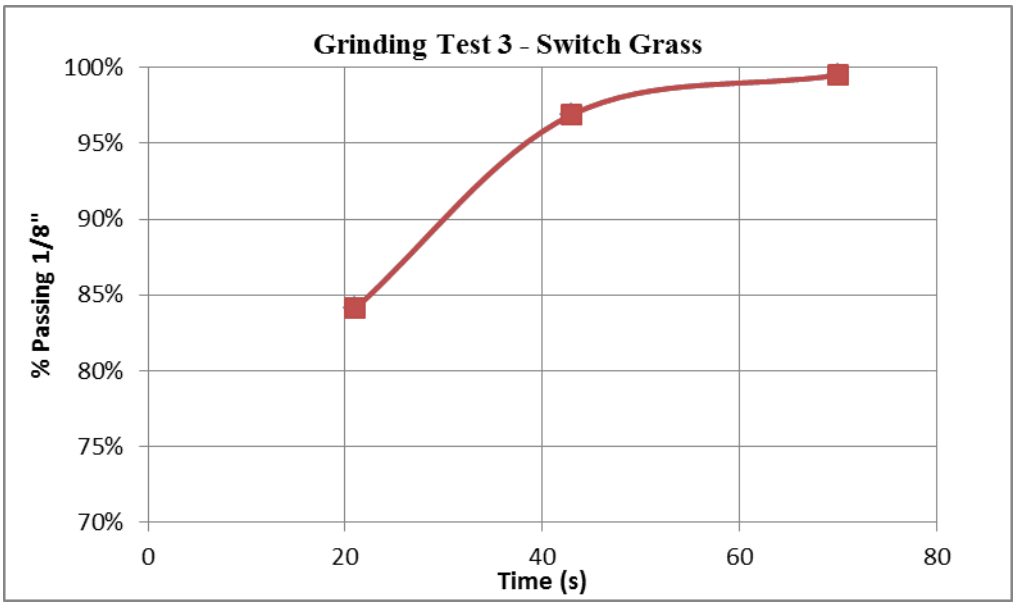

Photo Source: Altex Technologies Corporation

5.10.1.6 Power Consumption Experiments

In addition to testing the mill's ability to grind the biomass, the mill's power consumption during grinding was also characterized. Two experiments were performed with charges measuring between two kg to five kg, where a multimeter was used to measure amperage and voltage of the mill's power supply. Measurements were taken of the power supply's A, B, and C phases. A large sample charge was used to allow enough time to obtain voltage and amperage data, which could then be used to calculate the power consumption (Equation 2) measured in watts.

$$P = I * V \quad \text{Eq. 2}$$

Tables 24, 25, and 26 show the power consumption for grinding the corn stover, switchgrass, and wheat straw.

Table 24: Power Tests – Corn Stover

Test #	Charge (kg)	Baseline Power (kW)	Power (kW)	Difference (kW)	Power (kWh/t)
1	5.0	18.1	20.4	2.3	38
2	4.7	18.1	27.2	9.1	152

Source: Altex Technologies Corporation

Table 25: Power Tests – Switchgrass

Test #	Charge (kg)	Baseline Power (kW)	Power (kW)	Difference (kW)	Power (kWh/t)
1	2.75	9.7	13.1	3.4	57
2	2.75	12.3	16.4	4.1	68

Source: Altex Technologies Corporation

Table 26: Power Tests – Wheat Straw

Test #	Charge (kg)	Baseline Power (kW)	Power (kW)	Difference (kW)	Power (kWh/t)
1	2.75	10.6	13.1	2.5	42
2	2.84	8.5	13.0	4.5	75

Source: Altex Technologies Corporation

Published results in peer reviewed publications on specific energy consumption for hammer milling of biomass are in the range of 20 kwh/ton to 100 kwh/ton, depending on the size of screen used in the hammer mill, initial moisture content of the raw biomass, feed particle size, type and variety of biomass and other factors. Hence, the BBADS test results indicate that there is no significant difference in the energy needed for reducing the BBADS biomass size from 2" to less than 1/8" particles in a hammer mill versus typical unprocessed biomass.

5.10.1.7 Particle Size Distribution

A particle size distribution analysis (PSD) was performed on the milled material produced during the grinding and mill power testing for each sample. The milled biomass was first blended prior to the collection of the sample in order to provide a representation of a homogenized particle size distribution. Approximately 100.0 grams of biomass were collected and screened on a sieve shaker using a 600 second cycle. The screen sizes selected for the PSD were: 10, 30, 80, 100, and 200 US mesh. Table 27 through Table 29 details the results of the PSD analysis for the corn stover, switchgrass, and wheat straw samples.

Table 27: Particle Size Distribution – Corn Stover

Starting Mass (g)		100.0
Screen Size (US Mesh)	**Mass Retained (g)**	**% Passing**
10	2.7	97.3%
30	54.3	42.2%
80	32.5	9.2%
100	2.0	7.2%
200	3.4	3.8%
Bottom Pan	3.7	--

Source: Altex Technologies Corporation

Table 28: Particle Size Distribution – Switchgrass

Starting Mass (g)		100.0
Screen Size (US Mesh)	**Mass Retained (g)**	**% Passing**
10	.4	99.6%
30	42.8	56.4%
80	46.6	9.4%
100	4.9	4.4%
200	3.0	1.4%
Bottom Pan	1.4	--

Source: Altex Technologies Corporation

Table 29: Particle Size Distribution – Wheat Straw

Starting Mass (g)		100.0
Screen Size (US Mesh)	**Mass Retained (g)**	**% Passing**
10	1.5	98.5
30	64.8	33.2
80	27.4	5.6
100	2.1	3.5
200	1.7	1.8
Bottom Pan	1.8	--

Source: Altex Technologies Corporation

These results show that the material is small enough for good processing in pressurized reactors for thermochemical conversion of biomass to liquid biofuels.

5.10.2 Proximate and Ultimate Analysis

Samples of all three materials tested at UC Davis were sent to ALS Environmental for proximate and ultimate analysis and the results are given in Table 30 to Table 32**.** ALS Environmental is certified and ISO 17025 accredited for Fuel Testing through A2LA laboratory (certificate no. 3568.01) and has tested biomass materials for biofuel and biopower applications. Hence, log samples were sent to ALS Environmental, 3860 S Palo Verde Road, Tucson, AZ for proximate and ultimate analysis, including moisture content of logs using standard methods.

Table 30: Carbon Hydrogen and Nitrogen Content Present the Biomass

Sl.NO	Biomass material	Carbon, %	Hydrogen, %	Nitrogen, %
1	Switchgrass	44.94	5.81	1.01
2	Wheat straw	44.4	5.87	1.35
3	Wheat straw – Feed	43.04	5.51	0.34

Source: Altex Technologies Corporation

Test results showed that BBADS densification did not affect the composition through off gassing or other processes. The elemental properties of the logs had carbon, nitrogen, and hydrogen contents similar to those for raw biomass. As per data presented in Table 31, raw feed wheat straw had the lowest heating value followed by wheat straw logs and switchgrass logs. The lower moisture content and higher energy densities for logs will make them more valuable as a feedstock for biofuels conversion plants.

Table 31: Heating Value of Biomass

Sl.NO	Biomass material	Heating value, Btu/lb	
		As received	Moisture free
1	Switchgrass	6,924	7,700
2	Wheat straw	7,001	7,590
3	Wheat straw – Feed	6,069	6,551

Source: Altex Technologies Corporation

As expected, the ash content present in the agricultural residue is over 8 percent for all three biomass materials. Moisture contents are 10% or lower for all BBADS biomass products.

Table 32: Volatile Matter and Ash Content Present in Biomass

Sl. NO	Biomass Material	Moisture %	Volatile matter, %		Fixed Carbon, %		Ash, %	
			As received	Moisture free	As received	Moisture free	As received	Moisture free
1	Switchgrass	10.08	66.13	73.54	15.68	17.44	8.11	9.12
2	Wheat straw	7.75	67.26	72.91	15.96	17.30	9.04	9.80
3	Wheat straw – Feed	7.36	66.51	71.79	15.67	16.91	10.47	11.30

Source: Altex Technologies Corporation

5.10.3 Drop Tests

In prior efforts, the durability of logs under handling conditions was characterized by dropping the logs onto a cement floor from different heights and observing if the logs break or lose substantial mass. This test would represent some severe handling conditions in practice as logs are transported from one container to another. In prior efforts, agricultural residue logs were dropped from heights of over 10 feet and the logs remained intact without any significant material loss. The same procedure was followed for logs produced in this project. It was found that the logs remained intact after dropping the logs from a height of 10 feet onto a concrete pad. Therefore, relative to handling, the present logs have similar durability characteristics to those produced during prior pilot-scale testing.

CHAPTER 6:
Economic Evaluation

The preliminary economic assessment was updated and the economic benefits of BBADS log production was estimated using data collected during M&V work at UC Davis. Warren Energy Engineering supported this work at UC Davis and defined electrical and thermal energy requirements for BBADS that are given in Table 33.

Table 33: Electrical Energy Requirements for Making logs in BBADS Equipment

BBADS equipment capacity, tons/hr	Power consumption, kWh/ton
0.52	95.4
1.03	47.70
1.55	31.80
2.06	23.85

Source: Altex Technologies Corporation

In order to determine the cost of BBADS, the cost of components and subsystems were defined. Table 34 gives cost details for the different full-scale BBADS subcomponents. Material costs are less than 50 percent of the total equipment cost. Since only one BBADS unit was fabricated, the total cost of equipment for this unit is high. When BBADS equipment is fabricated in production unit volumes, both material cost and fabrication and assembly costs will be lower than the cost provided in Table 34. However, to be conservative, the economic analysis used the actual equipment cost incurred during the project.

Table 34: Fabrication Cost of Full-Scale BBADS Equipment

SL. No.	Equipment Cost	Qty, Nos.	Price, $	Cost,$
1	Fabrication charges	1	40,000	40,000
2	Heating system	1	50,000	50,000
3	Cooling system	1	2,500	2,500
4	Hydraulic system	1	30,398	30,400
5	Bale breaker, fabrication charges	1	8,000	8,000
6	Feeder, fabrication charges	1	12,000	12,000
7	Control system	1	10,000	10,000
8	Assembly charges	1	6,000	6,000
	Total cost of equipment			158,900

Source: Altex Technologies Corporation

As originally defined, the capacity of full-scale BBADS equipment must be 15,000 tons/ year, or approximately two tons/hour. The M&V test work results showed that electrical requirements were 24 kWh/ton with BBADS equipment having processing capacity of two tons/hour. This is

87 percent less compared to pelleting and 81 percent less compared to cubing. During M&V testing, the BBADS equipment was operated on wheat straw at an average throughput of 0.5 tons/hour and maximum throughput of 0.85 tons/hour. The inherent density of wheat straw was the lowest among the different biomass materials tested during this project. In addition, the feeder parameters were not optimized for optimum capacity. Based on experience with denser feed material, it is possible to operate the BBADS equipment at two tons/hour without changing the processing speed. Given these various scenarios, economic analyses based on M&V results were carried out for three different cases, all having a total processing capacity of 15,000 tons/year. These cases included Case 1: A densification facility with four BBADS units having 0.5 tons/hour capacity, Case 2: A densification facility with two BBADS units having one ton/hour processing capacity and Case 3: A densification facility with one BBADS unit having two tons/hour processing capacity.

6.1 Case 1: BBADS Densification with Four Units of 0.5 Tons Per Hour Processing Capacity

Table 35: Case 1

BBADS equipment capacity, tons/hour	0.5
Number of BBADS equipment	4
Total processing capacity, tons/year	14400

The fixed costs for the BBADS processing facility are calculated by including the cost of land, buildings, BBADS equipment, and ancillary equipment, such as a truck scale, front end loader, and fork lift. The land cost was based on published reports for the industrial locations in the UC Davis area. However, the BBADS processing facility will be located in a rural area where the land cost is very low and the actual cost of land and building development will be less than the cost provided in Table 35.

Table 36: Fixed Cost for Log Production – Case 1

Item No	Item	Quantity	Unit cost	Amount/year
1	Land Development	Lumpsum		$ 20,000
2	Buildings			
	a. Work area	Lumpsum		$ 55,000
	b. Office	Lumpsum		$ 80,000
	c. Storage building	Lumpsum		$ 50,000
	d. Receiving area	Lumpsum		$ 55,000
3	Truck scale	Lumpsum		$ 40,000
4	BBADS equipment	4	158,900	$ 635,600
5	Fork lift	1	47,659	$ 47,659
6	Front loader	1	8,393	$ 8,393
	Total			$ 991,652

Source: Altex Technologies Corporation

The operating cost for BBADS equipment is estimated and given in Table 36. For electricity cost, an electricity consumption rate of 96 kWh/ton, as per the M&V report, was included. This is a conservative power cost. Using three operators and one manager to staff the BBADS processing facility is reasonable, based on the needs identified during the demonstration testing. The fuel cost is also included as per M&V results.

Table 37: Variable Cost for Log Production – Case 1

Item No	Item	Quantity / year	Unit	Unit Cost	Amount/Year
1	Electricity	1,374,336	Kwh	$0.07	$ 96,204
2	Fuel	4809.6	Mmbtu	$4.00	$ 19,238
3	Repairs and Maintenance			3%	20,750
	Labor cost				
4	Manager	1	No.	$ 30,000	$ 30,000
5	Operator / Mechanic	3	No.	$ 25,000	$ 75,000
	Total				$ 241,191

Source: Altex Technologies Corporation

Based on the fixed and variable costs provided in Table 35 and Table 36, the total cost of log production was estimated to be $23.64/ton, as noted in Table 37 which is very low compared to other existing technologies.

Table 38: Total Cost for Log Production

Item No	Item	Quantity / Year	Unit	Unit Cost	Amount/Year
1	Total variable cost				$ 241,191
2	Depreciation		$ 991,652	10%	$ 99,165
Grand Total					$ 340,357
Total cost of log production, $/ton					$ 23.64

Source: Altex Technologies Corporation

6.2 Case 2: BBADS Densification with Two One Ton Per Hour Processing Capacity

In Case 2, the economic analysis was carried out with a BBADS unit processing capacity of one ton/hour. A processing center with a processing capacity of 15,000 tons/year, will require two BBADS units.

Table 39: Case 2

BBADS equipment capacity, tons/hour	1
Number of BBADS units	2
Total processing capacity, tons/year	14400

For the economic analysis, the cost of each system remains the same and the cost of equipment is based on details shown in Table 35. The total fixed cost required to build and operate a BBADS center with a processing capacity of 15,000 tons/year is estimated to be $ 673,852, as given in Table 38.

Table 39b: Fixed Cost for Log Production – Case 2

Item No	Item	Quantity / year	Unit	Unit cost, $	Amount/year
1	Land Development	Lumpsum			$ 20,000
2	Buildings				
	a. Work area	Lumpsum			$ 55,000
	b. Office	Lumpsum			$ 80,000
	c. Storage building	Lumpsum			$ 50,000
	d. Receiving area	Lumpsum			$ 55,000
3	Truck scale	Lumpsum			$ 40,000
4	BBADS equipment	2		158,900	$ 317,800
5	Fork lift	1		47,659	$ 47,659
6	Front loader	1		8,393	$ 8,393
	Total				$ 673,852

Source: Altex Technologies Corporation

The operating cost of the BBADS processing facility with BBADS units processing one ton/hour is estimated and results are shown in Table 39. In this case, an electric consumption rate of 48 kwh/ton and fuel consumption of 167,000 Btu/hour were used.

Table 40: Variable Cost for Log Production – Case 2

Item No	Item	Quantity / Year	Unit	Unit Cost	Amount/Year
1	Electricity	687,168	Kwh	$ 0.07	$ 48,102
2	Fuel	2404.8	Mmbtu	$ 4.00	$ 9,619
3	Repairs and Maintenance			3%	11,216
	Labor cost				
4	Manager	1	No.	$ 30,000	$ 30,000
5	Operator / Mechanic	3	No.	$ 25,000	$ 75,000
	Total				$ 173,937

Source: Altex Technologies Corporation

Combining the fixed and variable costs, total log production costs are estimated and given in Table 40. Results show that the cost of BBADS logs will be $16.76/ton.

Table 41: Total Cost for Log Production – Case 2

Item No	Item	Quantity / Year Unit		Unit Cost	Amount/Year
1	Total variable cost				$ 173,937
2	Depreciation		$ 673,852	10%	$ 67,385
Grand Total					$ 241,322
Total Cost of Log Production $/ton					$ 16.76

Source: Altex Technologies Corporation

6.3 Case 3: BBADS Processing Capacity Installed with Two Tons Per Hours Processing Capacity

Based on extensive tests carried out at the Altex Watsonville facility and UC Davis, it was shown that the BBADS processing equipment can produce logs at over two tons/hour. However, for this economic analysis, a more conservative processing capacity of two tons/hour is considered.

Table 41b: Case 3

BBADS equipment capacity, tons/hour	2
Number of BBADS equipment	1
Total processing capacity, tons/year	14,400

In this case, only one BBADS unit will be sufficient for producing 15,000 tons/year of biomass logs. The total fixed cost for a BBADS processing facility with one BBADS unit was estimated and results are given in Table 41.

Table 42: Fixed Cost for Log Production – Case 3

Item No	Item	Quantity / Year	Unit	Unit Cost	Amount/Year
1	Land Development	Lumpsum			$ 20,000
2	Buildings				
	a. Work area	Lumpsum			$ 55,000
	b. Office	Lumpsum			$ 80,000
	c. Storage building	Lumpsum			$ 50,000
	d. Receiving area	Lumpsum			$ 55,000
3	Truck scale	Lumpsum			$ 40,000
4	BBADS equipment	1		158,900	$ 158,900
5	Fork lift	1		47,659	$ 47,659
6	Front loader	1		8,393	$ 8,393
	Total				$ 514,952

Source: Altex Technologies Corporation

Similarly, the total variable cost required for operation of a BBADS processing facility with 15,000 tons/year capacity is estimated and given in Table 42. In this case, the total cost of electricity is calculated with an electricity consumption rate of 24 kWh/ton as per M&V results. Also, including the fuel consumption, the total operating cost is estimated to be $140,309/year.

Table 43: Variable Cost for Log Production

Item No	Item	Quantity / Year	Unit	Unit Cost	Amount/Year
1	Electricity	343,584	Kwh	$ 0.07	$ 24,051
2	Fuel	1202.4	Mmbtu	$ 4.00	$ 4,810
3	Repairs and Maintenance			3%	6,449
	Labor cost				
4	Manager	1	No.	$ 30,000	$ 30,000
5	Operator / Mechanic	3	No.	$ 25,000	$ 75,000
	Total				$ 140,309

Source: Altex Technologies Corporation

For Case 3, Table 43 shows the total production cost combining the deprecation and variable costs. In all cases, the equipment life is assumed to be 10 years. Based on this analysis, the total production cost for the highest throughput case is estimated to be $ 13.32/ton, excluding cost of biomass materials. As per published reports, the cost of pellet production is in the range of

$80/ton to $100/ton and the cost of biomass cube production is in the range of $61/ton to $71/ton. Hence, it can be concluded that BBADS logs can be produced at up to 87 percent less cost compared to pelleting and up to 81 percent less compared to cubing. These performance metrics are key for reducing the logistics costs of production and supply of biomass to bio refineries and power plants.

Table 44: Total Cost for Log Production

Item No	Item	Quantity / Year	Unit	Unit Cost	Amount/Year
1	Total variable cost				$ 140,309
2	Depreciation		$ 514,952	10%	$ 51,495
Grand Total					$ 191,804
Total cost of log production $/ton					$ 13.32

Source: Altex Technologies Corporation

CHAPTER 7:
Conclusions and Recommendations

Under this project, a full scale BBADS biomass densification system was designed, fabricated, and demonstrated in the field at the UC Davis Agronomy Station. By densifying agricultural residues with BBADS, a higher value biomass based feedstock for biofuels or biopower application is created. With higher density by a factor of 10, the BBADS logs are much lower in cost to handle, store, and transport to the point of use than the raw biomass material. This reduces end-to-end biomass to biofuels or biopower costs and makes these renewable fuel approaches more competitive with fossil based fuels. In addition to these important benefits, the beneficial removal of residuals from farms facilitates low-till farming practices that minimize nutrient runoff and water pollution. In addition, by converting the residue to a higher value product, the practice of open burning to dispose of residues is reduced along with the associated air pollution. During the project 11 inch diameter dense logs were created from agricultural residues corn stover and wheat straw, as well as switchgrass energy crops. During these tests, throughput, power, and fuel flow rates were measured to calculate energy usage and compare that usage with other densification approaches, like pelletization or cubing. The BBADS project goals included: (1) develop and demonstrate a full-scale 15,000 tons/year BBADS system that can densify feed and biomass to 35 lb/cf; (2) determine energy use and compare results with existing densification units to show over 50 percent electric power reductions; and (3) determine processing costs per ton and show over 50 percent overall cost reduction versus existing densification units. Based on the performance measurements obtained under this effort:

(1) Operation of the unit was successfully demonstrated showing that log production can be achieved continuously in automatic operation mode.

(2) The unit can achieve a production capacity of 15,000 tons/year with the proper biomass loading ahead of compaction.

(3) Logs of 35 lb/cf can be created from corn stover, wheat straw, and switchgrass.

(4) The electrical energy required for making logs in BBADS equipment was 24 kwh/ton, which is 87 percent and 81 percent less compared to pelleting and cubing technologies, with BBADS log density higher than that achieved by cubing.

(5) The processing cost per ton for BBADS was found to be $13.32/ton, which is 87 percent and 81 percent less than pelletization and cubing densification costs, respectively

These results show that the BBADS demonstration unit has met project goals for log production. Under this task, the log product was also evaluated. Composition tests showed that the logs had moisture contents below 10 percent as well as high energy density. To test log handling durability, the logs were dropped repeatedly from a 10 foot height. The logs survived the drop without breakage or loss of significant material, supporting that the logs can stand up to significant handling.

Since logs must be reduced to particulates for proper conversion reactor processing, the logs were subjected to a two-step size reduction process. Test results showed that the logs can be reduced to 0.125 inch (3.2 mm) top size with reasonable grinding times and energy. This size is in the proper range for several biomass fuel conversion reactor and biopower cofiring applications of interest. The good test results and economic analyses support the potential of BBADS for reducing the feedstock logistic costs for biomass to fuel conversion or cofiring. In addition, some limited tests in densifying Alfalfa to over 35 lbm/cf supports that BBADS could also be used to densify animal feed materials for US or export markets.

Total available markets for hay and agricultural residues are listed in Table 44. If the total agricultural residues were densified by BBADS versus pelletization, the power needed would be reduced from 180 KWh/ton to 25 KWh/ton, which then translates into the power and power cost reductions shown in Table 45. For determining the cost reduction, a power cost of $100/MWh is assumed. These are very substantial potential power savings. By densifying the biomass and maximizing the legal load for over-the-highway trucks, the number of trips to deliver the same energy content to a biofuels or biopower plant is greatly reduced. Table 46 summarizes the truck diesel fuel, diesel fuel costs, and pollutant reductions that could be achieved by BBADS versus shipping raw biomass to the same delivery point. The above benefits are related to biomass feedstock logistics. Considering that the delivery of BBADS logs to a biofuels plant would make the conversion process more cost competitive, a thermochemical conversion would produce a fossil fuel substitute that would reduce greenhouse gases by 17 million tons/year and 71 million tons/year for California and the U.S., respectively. Relative to the co-firing application, supplying the total available BBADS feedstocks in these applications could reduce greenhouse gas emissions. These supply logistics and end use benefits are very substantial when the total available agricultural residues are considered. Even if the BBADS market penetration is only 20 percent, the impacts are still very substantial. Furthermore, the cofire market noted in Table 2, particularly related to exports, is relatively near term and this market is expected to grow at over 15 percent/ year. This would be an important commercial market target for BBADS. As this market is addressed, the longer term biofuels market could be targeted as biofuels plants come on-line. As noted in Table 2, the biofuels market would be many times the size of the initial cofire market. Lastly, the domestic and export hay markets are substantial and could be another near term market for BBADS feedstocks. However, this animal feed market has stringent product specifications and further BBADS efforts are needed to determine the suitability and benefits of the logs as animal feed in domestic and export markets.

It is clear that BBADS has significant potential to address farm problems related to nutrient runoff and open burning as well as create a higher value product that can help meet future and evolving renewable fuels or power targets at a competitive cost to fossil fuels. To realize the benefits of BBADS, it is recommended that the design be matured to a production level and multiple beta units be built and installed to establish broad operating experience that will demonstrate the value of the process under commercial operation. This will then position the technology for commercial production and sales to near term markets as well as begin to prepare the technology for longer term and larger biofuels markets.

Table 45: Total Available Supplies of Hay and Agricultural Residues In California and U.S.

Market	Unit	California	United States
Hay total market	Tons/yr	7,000,000	32,000,000
Hay export market	Tons/yr	600,000	3,000,000
Agricultural residues for biofuels or biopower	Tons/yr	90,000,000	365,000,000

Source: Altex Technologies Corporation

Table 46: Densification Power and Power Cost Savings

Type of Saving	Total Qty.	California	United States
Power savings	Million MWh/year	13.95	56.42
Power cost savings	Billion dollars/year	1.4	5.6

Source: Altex Technologies Corporation

Table 47: Truck Trip Reduction Impacts with BBADS Versus Raw Biomass

List of Items	Total Qty.	California	United States
Truck miles reduction	Million miles/year	248	2500
Diesel fuel reduction	Million gallons/year	49.5	505
Diesel fuel cost reduction	Billion dollars/year	1.92	7.35
NOx reduction	Tons/year	2,900	29,000
Particulate Matter	Tons/year	54	551
Volatile organic compounds	Tons/year	74.3	752
Greenhouse gas	Tons/year	544,000	5,440,000

Source: Altex Technologies Corporation

GLOSSARY

Term	Definition
PIER	Public Interest Energy Research
DOE	Department of Energy, United States
BBADS	Biomass Blending and Densification System
UCD	University of California at Davis, CA
M&V	Measurement and Verification
FMEA	Failure Mode and Effect Analysis
FEA	Finite Element Analysis
Btu	British Thermal Unit, Unit of measure of Heat input
HP	Horse Power, Unit of measure of power of electrical motor installed in the BBADS system
cDAQ	Compact Data Acquisition modules
LABVIEW	A Data Acquisition and Processing Software used in control system of various types of equipment
BOMcDAQ	Bill of MaterialCompact Data Acquisition modules
Cooling Tower	An Evaporative cooling system where thin films of warm water is formed in a tower which enhances the evaporation rate of warm water and reduces the temperature of cooling water circulating the cooling section.
BOM	Bill of Material
Ton	Mostly refers to US ton (2000 lbs) of biomass on dry basis.
Psi	Pounds per Square Inch, a Unit of measure of pressure in the hydraulic system
kWh	Kilowatt hour, Unit of measure of Electric Energy consumption of BBADS system.
mWh	Megawatt hour, Unit of measure of Energy consumption of BBADS systems.
lb/cf or	Pounds per Cubic Foot, Unit of measure of density of biomass.

gpm	Gallon per minute, Unit of measure of water and oil flow rate in the BBADS system
lb/cf or l	Pounds per Cubic Foot, Unit of measure of density of biomass

REFERENCES

"Agriculture and Farming." *Vermeer.* http://www2.vermeer.com/vermeer/NA/en/N/industries/agriculture.

California Energy Commission. *Biomass Blending and Densification System Final Report by Kelly, John, Nehru Chevanan, and et. al*. Sacramento: California Energy Commission 2011.

"Chamberlain Farms' Facebook Page." *Facebook.*

Hartline, A. *Galling resistance of alloy 25, Brush Wellman engineered materials*. Publisher City: Publisher, 2015.

"John Deere Homepage." *John Deere*. http://www.deere.com/en_US/regional_home.page.

"Locations." *Comoso*. http://www.comoso.com/locations.

U.S. Department of Energy. *Role of alternative energy sources: Pulverized coal and biomass co-firing technology assessment by Timothy J. Skone*. Washington, D.C.: GPO, 2012.

U.S Department of Energy. *Uniform format bioenergy feedstock supply system design report series by Hess, JR, KL Kennedy, et. al.* Washington, D.C.: GPO, 2009.

"Waukesha Foundry Homepage." *Waukesha Foundry.* http://www.waukeshafoundry.com/.