Energy Research and Development Division
FINAL PROJECT REPORT

DEMONSTRATION OF COMBINED HEAT AND POWER WITH THERMAL STORAGE FOR MODERN GREENHOUSES

Appendix A-E

Prepared for: California Energy Commission
Prepared by: Southern California Gas Company

JULY 2016
CEC-500-2016-049-AP

APPENDIX A

Appendix A: CHP Unit 2 Engine Specifications

Technical Description

Cogeneration Unit

JMS 624 GS-N.L

Houweling

Electrical output	**4347 kW el.**
Thermal output	**18.171 MBTU/hr**

Emission values

NOx < 500 mg/Nm³ (5% O2)

0.01 Technical Data (at module) 4
Main dimensions and weights (at module) 5
Connections 5
Output / fuel consumption 5
0.02 Technical data of engine 6
Thermal energy balance 6
Exhaust gas data 6
Combustion air data 6
Sound pressure level 7
Sound power level 7
0.03 Technical data of generator 8
Reactance and time constants 8
0.03.01 Technical data of gearbox 8
0.04 Technical data of heat recovery 9
General data - Hot water circuit 9
Mixture Intercooler (1st stage) 9
Heat exchanger lube oil 9
Heat exchanger engine jacket water 9
Exhaust gas heat exchanger 9
connection variant FG 10
0.10 Technical parameters 11
1.00 Scope of supply - Module 12
1.01 Spark ignited gas engine 12
1.01.01 Engine design 12
1.01.02 Engine accessories 14
1.01.02 Engine accessories – Commissioning spare parts 14
1.01.03 Standard tools (1/plant) 14
1.02 Generator-medium voltage 15
1.03 Module accessories 16
1.03.02 Automatic lube oil replenishing system 17
1.05 Pre-chamber gas compressor 18
1.07 Painting 18
1.11 Engine generator control panel – DIA.NE XT 18
1.11.03 Remote Data-Transfer with DIA.NE XT - HERMES 23
1.20.01 Starting system 25
1.20.03 Electric jacket water preheating 26
2.00 Electrical equipment 26

2.02 Grid monitoring device 27
4.00 Delivery, installation and commissioning 27
4.01 Carriage 27
4.02 Unloading 27
4.03 Assembly and installation 27
4.04 Storage 27
4.05 Start-up and commissioning 27
4.06 Trial run 27
4.07 Emission measurement (exhaust gas analyser) 27
5.02 Factory tests and inspections 28
5.02.01 Engine tests 28
5.02.02 Generator tests 28
5.02.03 Module tests 28
5.03 Documentation 29

0.01 Technical Data (at module)

Data at:				Full load	Part Load	
Fuel gas LHV		BTU/scft		868		
				100%	75%	50%
Energy input		MBTU/hr	[2]	32.245	24.803	17.364
Gas volume		cfhr	*)	37.148	28.575	20.005
Mechanical output		bhp	[1]	6.023	4.517	3.012
Electrical output		kW el.	[4]	4.347	3.224	2.123
Recoverable thermal output						
~ Intercooler		MBTU/hr		4.859		
~ Lube oil		MBTU/hr		1.511		
~ Jacket water		MBTU/hr		1.904		
~ Exhaust gas cooled to 100 °F		MBTU/hr		9.897		
Total recoverable thermal output		MBTU/hr	[5]	18.171		
Heat to be dissipated						
~ Surface heat	ca.	MBTU/hr	[7]	951		
~ Balance heat		MBTU/hr		324		
Spec. fuel consumption of engine		BTU/bhp.hr	[2]	5.354		
Lube oil consumption	ca.	gal/hr	[3]	0,42		
Electrical efficiency		%		46,0%		
Thermal efficiency		%		56,3%		
Total efficiency		%	[6]	102,3%		
Hot water circuit:						
Forward temperature		°F		203,0		
Return temperature		°F		140,0		
Hot water flow rate		GPM		430,6		

*) approximate value for pipework dimensioning
[_] Explanations: see 0.10 - Technical parameters

All heat data is based on standard conditions according to attachment 0.10. Deviations from the standard conditions can result in a change of values within the heat balance, and must be taken into consideration in the layout of the cooling circuit/equipment (intercooler; emergency cooling; ...). In the specifications in addition to the general tolerance of +/- 8% on the thermal output a further reserve of 10% is recommended for the dimensioning of the cooling requirements.

Main dimensions and weights (at module)

Length	in	~ 480
Width	in	~ 90
Height	in	~ 120
Weight empty	lbs	~ 99.014
Weight filled	lbs	~ 103.424

Connections

Hot water inlet and outlet	in/lbs	6"/232
Exhaust gas outlet	in/lbs	25"/145
Fuel gas (at gas train)	in/lbs	6"/232
Fuel Gas (at module)	in/lbs	4"/232
Water drain ISO 228	G	½"
Condensate drain	in/lbs	2"/145
Safety valve - jacket water ISO 228	in/lbs	3"/232
Safety valve - hot water	in/lbs	4"/145
Lube oil replenishing (pipe)	in	1,1
Lube oil drain (pipe)	in	1,1
Jacket water - filling (flex pipe)	in	0,5
Intercooler water-Inlet/Outlet 1st stage	in/lbs	6"/232
Intercooler water-Inlet/Outlet 2nd stage	in/lbs	4"/232

Output / fuel consumption

ISO standard fuel stop power ICFN	bhp	6.023
Mean effe. press. at stand. power and nom. speed	psi	348
Fuel gas type		Natural gas
Based on methane number|Min. methane number	MN d)	94|80
Compression ratio	Epsilon	12,50
Min. fuel gas pressure for the pre chamber	psi	80
Min./Max. fuel gas pressure at inlet to gas train	psi	2,9 - 7,25 c)
Allowed Fluctuation of fuel gas pressure	%	± 10
Max. rate of gas pressure fluctuation	psi/sec	0,145
Maximum Intercooler 2nd stage inlet water temperature	°F	113
Spec. fuel consumption of engine	BTU/bhp.hr	5.354
Specific lube oil consumption	g/bhp.hr	0,22
Max. Oil temperature	°F	176
Jacket-water temperature max.	°F	203
Filling capacity lube oil (refill)	gal	~ 264

c) Lower gas pressures upon inquiry
d) based on methane number calculation software AVL 3.1 (calculated without N2 and CO2)

0.02 Technical data of engine

Manufacturer		GE Jenbacher
Engine type		J 624 GS-H01
Working principle		4-Stroke
Configuration		V 60°
No. of cylinders		24
Bore	in	7,48
Stroke	in	8,66
Piston displacement	cu.in	9.135
Nominal speed	rpm	1.500
Mean piston speed	in/s	433
Length	in	378
Width	in	83
Height	in	101
Weight dry	lbs	39.683
Weight filled	lbs	41.888
Moment of inertia	lbs-ft²	2200,14
Direction of rotation (from flywheel view)		left
Flywheel connection		SAE 24"
Radio interference level to VDE 0875		N
Starter motor output	kW	20
Starter motor voltage	V	24

Thermal energy balance

Energy input	MBTU/hr	32.245
Intercooler	MBTU/hr	4.859
Lube oil	MBTU/hr	1.511
Jacket water	MBTU/hr	1.904
Exhaust gas total	MBTU/hr	7.855
Exhaust gas cooled to 356 °F	MBTU/hr	4.262
Exhaust gas cooled to 212 °F	MBTU/hr	6.132
Surface heat	MBTU/hr	522
Balance heat	MBTU/hr	324

Exhaust gas data

Exhaust gas temperature at full load	°F [8]	676
Exhaust gas mass flow rate, wet	lbs/hr	50.294
Exhaust gas mass flow rate, dry	lbs/hr	46.928
Exhaust gas volume, wet	cfhr	635.641
Exhaust gas volume, dry	cfhr	570.912
Max.admissible exhaust back pressure after engine	psi	0,725

Combustion air data

Combustion air mass flow rate	lbs/hr	48.795
Combustion air volume	CFM	10.077
Max. admissible pressure drop in front of intake-air filter	psi	0,145

Sound pressure level

Aggregate b)	dB(A) re 20µPa	103
31,5 Hz	dB	90
63 Hz	dB	97
125 Hz	dB	103
250 Hz	dB	101
500 Hz	dB	96
1000 Hz	dB	95
2000 Hz	dB	94
4000 Hz	dB	96
8000 Hz	dB	97
Exhaust gas a)	dB(A) re 20µPa	122
31,5 Hz	dB	109
63 Hz	dB	109
125 Hz	dB	121
250 Hz	dB	116
500 Hz	dB	117
1000 Hz	dB	113
2000 Hz	dB	113
4000 Hz	dB	118
8000 Hz	dB	101

Sound power level

Aggregate	dB(A) re 1pW	124
Measurement surface	ft²	1.550
Exhaust gas	dB(A) re 1pW	130
Measurement surface	ft²	67,60

a) average sound pressure level on measurement surface in a distance of 3.28ft according to DIN 45635, precision class 2.
b) average sound pressure level on measurement surface in a distance of 3.28ft (converted to free field) according to DIN 45635, precision class 3.
The spectra are valid for aggregates up to bmpe=319,083028 psi. (add savety margin of 1dB to all values per increase of 15 PSI pressure).
Operation with 1200 rpm see upper values, operation with 1800 rpm add 3 dB to upper values.
Engine tolerance ± 3 dB

0.03 Technical data of generator

Manufacturer		Leroy-Somer e)
Type		LSA 56 BL65 e)
Type rating	kVA	5.700
Driving power	bhp	5.999
Ratings at p.f.= 1.0	kW	4.347
Ratings at p.f. = 0,8	kW	4.321
Rated output at p.f. = 0,8	kVA	5.401
Rated current at p.f. = 0,8	A	226
Frequency	Hz	60
Voltage	kV	13,8
Speed	rpm	1.800
Permissible overspeed	rpm	2.160
Power factor lagging		0,8 - 1,0
Efficiency at p.f.= 1.0	%	97,2%
Efficiency at p.f. = 0,8	%	96,6%
Moment of inertia	lbs-ft²	5577,49
Mass	lbs	26.037
Radio interference level to VDE 0875		N
Construction		B3/B14
Protection Class		IP 23
Insulation class		F
Temperature rise (at driving power)		F
Maximum ambient temperature	°F	104
Total harmonic distortion	%	1,5

Reactance and time constants

xd direct axis synchronous reactance	p.u.	1,93
xd' direct axis transient reactance	p.u.	0,28
xd'' direct axis sub transient reactance	p.u.	0,18
Td'' sub transient reactance time constant	ms	27
Ta Time constant direct-current	ms	95
Tdo' open circuit field time constant	s	3,88

e) GE Jenbacher reserves the right to change the generator supplier and the generator type. The contractual data of the generator may thereby change slightly. The contractual produced electrical power will not change.

0.03.01 Technical data of gearbox

Manufacturer		EISENBEISS
Gearbox ratio		1:1.2
Efficiency	%	99,60
Mass	lbs	6,834

0.04 Technical data of heat recovery

General data - Hot water circuit

Total recoverable thermal output	MBTU/hr	18.171
Return temperature	°F	140,0
Forward temperature	°F	203,0
Hot water flow rate	GPM	430,6
Design pressure of hot water	psi	145
Pressure drop hot water circuit	psi	27,56
Maximum Variation in return temperature	°F	+0/-36
Max. rate of return temperature fluctuation	°F/min	18

Mixture Intercooler (1st stage)

Type	gilled pipes	
Design pressure of hot water	psi	145
Pressure drop hot water circuit	psi	7,25
Hot water connection	in/lbs	6"/232

Heat exchanger lube oil

Type	plate heat exchanger	
Design pressure of hot water	psi	145
Pressure drop hot water circuit	psi	11,60
Hot water connection	in/lbs	4"/145

Heat exchanger engine jacket water

Type	plate heat exchanger	
Design pressure of hot water	psi	145
Pressure drop hot water circuit	psi	5,80
Hot water connection	in/lbs	4"/145

Exhaust gas heat exchanger

Type	shell-and-tube	
PRIMARY:		
Exhaust gas pressure drop approx	psi	0,22
Exhaust gas connection	in/lbs	25"/145
SECONDARY:		
Design pressure of hot water	psi	87
Pressure drop hot water circuit	psi	2,90
Hot water connection	in/lbs	6"/145

connection variant FG

Houweling **J 624 GS-H01**

Recoverable thermal output = 18.171 MBTU/hr

(±8% tolerance +10% reserve for cooling requirements)

* Hot water circuit

Hot water flow rate = 430,6 GPM

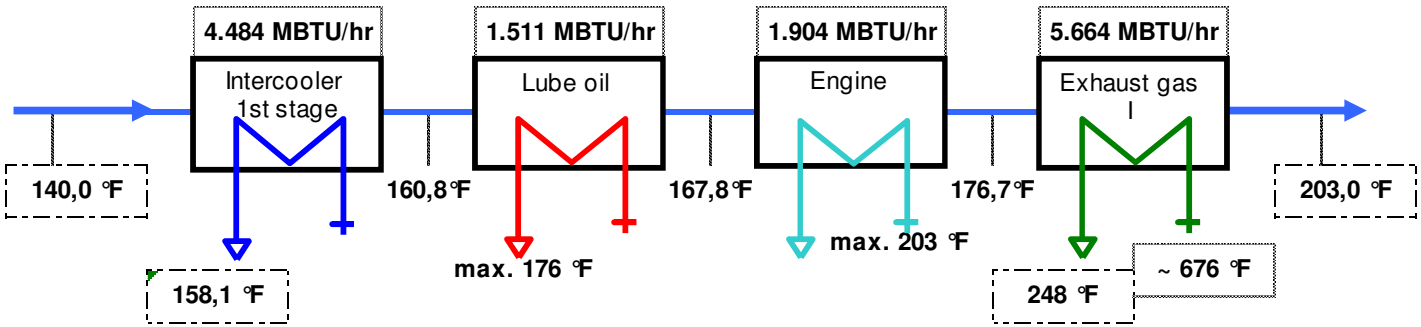

* Low Temperature Circuit

Aftercooler water flow rate = 176,1 GPM

(calculated with Glykol 37%)

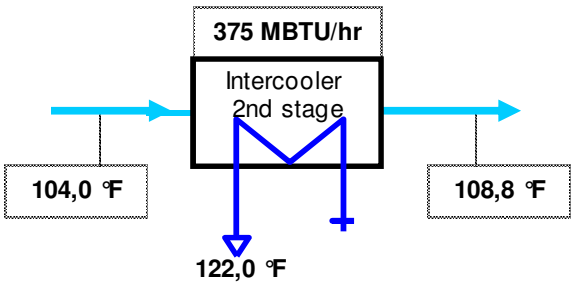

Exhaust gas II water flow rate = 330 GPM

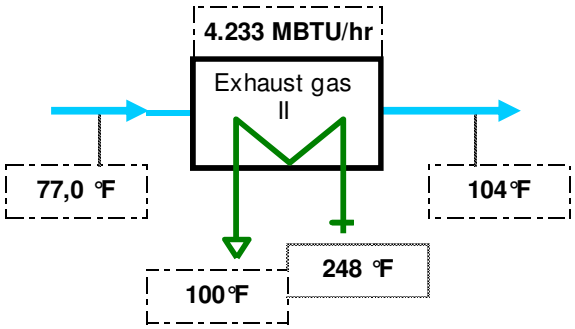

0.10 Technical parameters

All data in the technical specification are based on engine full load (unless stated otherwise) at specified temperatures as well as the methane number and subject to technical development and modifications. For isolated operation an output reduction may apply according to the block load diagram. Before being able to provide exact output numbers, a detailed site load profile needs to be provided (motor starting curves, etc.).

All pressure indications are to be measured and read with pressure gauges (psi.g.).

(1) At nominal speed and standard reference conditions ICFN according to DIN-ISO 3046 and DIN 6271, respectively
(2) According to DIN-ISO 3046 and DIN 6271, respectively, with a tolerance of + 5 %. Efficiency performance is based on a new unit (immediately upon commissioning).Effects of degradation during normal operation can be mitigated through regular service and maintenance work.
(3) Average value between oil change intervals according to maintenance schedule, without oil change amount
(4) At p. f. = 1.0 according to VDE 0530 REM / IEC 34.1 with relative tolerances
(5) Total output with a tolerance of +/- 8 %
(6) According to above parameters (1) through (5)
(7) Only valid for engine and generator; module and peripheral equipment not considered
(8) Exhaust temperature with a tolerance of +/- 8 %

Radio interference level
The ignition system of the gas engines complies the radio interference levels of CISPR 12 and EN 55011 class B, (30-75 MHz, 75-400 MHz, 400-1000 MHz) and (30-230 MHz, 230-1000 MHz), respectively.

Definition of output

- ISO-ICFN continuous rated power:
  Net break power that the engine manufacturer declares an engine is capable of delivering continuously, at stated speed, between the normal maintenance intervals and overhauls as required by the manufacturer. Power determined under the operating conditions of the manufacturer's test bench and adjusted to the standard reference conditions.
- Standard reference conditions:

Barometric pressure:	14.5 psi (1000 mbar) or 328 ft (100 m) above sea level
Air temperature:	77°F (25°C) or 298 K
Relative humidity:	30 %

- Volume values at standard conditions (fuel gas, combustion air, exhaust gas)

Pressure:	1 atmosphere (1013.25 mbar)
Temperature:	60°F (15.56°C)

Output adjustment for turbo charged engines
Standard rating of the engines is for an installation at an altitude ≤ **1640 ft** and an air intake temperature ≤ **95 °F**.

If the actual methane number is lower than the specified, the knock control responds. First the ignition timing is changed at full rated power. Secondly the rated power is reduced. These functions are done by the engine management.
Exceedance of the voltage and frequency limits for generators according to IEC 60034-1 Zone A will lead to a derate in output.

Parameters for the operation of GE Jenbacher gas engines
The genset fulfills the limits for mechanical vibrations according to ISO 8528-9.
If possible, railway trucks must not be used for transport (**TI 1000-0046**).
The following "Technical Instruction of GE JENBACHER" forms an integral part of a contract and must be strictly observed: **TI 1100-0110, TI 1100-0111 and TI 1100-0112.**

1.00 Scope of supply - Module

Design:
The module is built as a compact package.
Engine and generator are mounted to the base frame. To provide the best possible isolation from the transmission of vibrations the engine is mounted to the frame by means of anti-vibrational mounts. The remaining vibrations are eliminated by mounting the module on isolating pads (e.g. Sylomer). This, in principle, allows for placing of the module to be directly on any floor capable of carrying the static load. No special foundation is required. Prevention of sound conducted through solids has to be provided locally.

1.01 Spark ignited gas engine

Four-stroke, air/gas mixture turbocharged, aftercooled, with high performance ignition system and electronically controlled air/gas mixture system.
The engine is equipped with the most advanced

LEANOX® LEAN-BURN COMBUSTION SYSTEM

developed by GE JENBACHER.

1.01.01 Engine design

Engine block
Single-piece crankcase and cylinder block made of special casting; crank case covers for engine inspection, welded steel oil pan.

Crankshaft and main bearings
Drop-forged, precision ground, surface hardened, statically and dynamically balanced; main bearings (upper bearing shell: grooved bearing / lower bearing shell: sputter bearing) arranged between crank pins, drilled oil passages for forced-feed lubrication of connecting rods.

Vibration damper
Maintenance free viscous damper

Flywheel
With ring gear for starter motor and additionally screwed on.

Pistons
Two-part steel piston with oil passages for cooling; piston rings made of high quality material, main combustion chamber specially designed for lean burn operation.

Connecting rods
Drop-forged, heat-treated, big end diagonally split and toothed. Big end bearings (upper bearing shell: sputter bearing / lower bearing shell: sputter bearing) and connecting rod bushing for piston pin.

Cylinder liner
Chromium alloy gray cast iron, wet, individually replaceable.

Cylinder head
Specially designed and developed for GE JENBACHER-lean burn engines with optimized fuel consumption and emissions; water cooled, made of special casting, individually replaceable; Valve seats and valve guides and spark plug sleeves individually replaceable; exhaust and inlet valve made of high quality material; Pre-chamber with check-valve.

Crankcase breather
Connected to combustion air intake system

Valve train
Camshaft, with replaceable bushings, driven by crankshaft through intermediate gears, valve lubrication by splash oil through rocker arms.

Combustion air/fuel gas system
Motorized carburetor for automatic adjustment according fuel gas characteristic. Exhaust driven turbocharger, mixture manifold with bellows, water-cooled intercooler, throttle valve and distribution to cylinders.

Ignition system
Most advanced, fully electronic high performance ignition system, external ignition control.

Lubricating system
Gear-type lube oil pump to supply all moving parts with filtered lube oil, pressure control valve, pressure relief valve and full-flow filter cartridges. Cooling of the lube oil is arranged by a heat exchanger.

Engine cooling system
Electrical jacket water pump complete with distribution pipework and manifolds.

Exhaust system
Turbocharger and exhaust manifold

Exhaust gas temperature measuring
1 Thermocouple for each cylinder

Electric actuator
For electronic speed and output control

Electronic speed monitoring for speed and output control
By magnetic inductive pick up over ring gear on flywheel

Starter motor
3 Engine mounted electric starter motor

1.01.02 Engine accessories

Insulation of exhaust manifold:
Insulation of exhaust manifold is easily installed and removed

Sensors at the engine:
- Jacket water temperature sensor
- Jacket water pressure sensor
- Lube oil temperature sensor
- Lube oil pressure sensor
- Mixture temperature sensor
- Charge pressure sensor
- Minimum and maximum lube oil level switch
- Exhaust gas thermocouple for each cylinder
- Knock sensors
- Gas mixer / gas dosing valve position reporting.

Actuator at the engine:
- Actuator - throttle valve
- Bypass-valve for turbocharger
- Control of the gas mixer / gas dosing valve

1.01.02 Engine accessories – Commissioning spare parts

Commissioning spare parts:
Initial equipment with necessary spare parts for operation after commissioning.
- Spark plug sealing rings (26 pieces)
- Spark plug carrier (1 piece)
- Sparking plug (2 piece)
- Per-chamber gas valve (2 piece)
- Thermo element (Cylinder exhaust gas temperature – 2 piece)
- Sealing ring for thermo element(1 piece)
- Fuse for 6 A, 24 V(1 piece)
- Main gas filter(1 piece)
- 1 Stk. Safi

1.01.03 Standard tools (1/plant)

- Tools for spark plugs (special socket, extension, torque wrench)

- Tools for removal of oil filter cartridges
- Tools for installation/removal of the steel pistons and cylinder liners
- Tool for installation/removal of the main bearing bracket
- Tool for rotary shaft seal on the flyweel cover
- Feeler gauges
- Feeler gauge 0,35 mm
- 1 wrench 7 x 19
- Screwdriver 10
- Grease gun
- Measuring device for valve wear
- Adapter for measurements (BNC-BNC, MIL-ZZP)
- Assembly paste Never-Seez Nickel Special Grade
- Pointed pliers (cornered)
- Box for tools
- Personal safety equipment

1.02 Generator-medium voltage

The generator consists of the main generator (built as rotating field machine), the exciter machine (built as rotating armature machine) and the voltage regulator with cos. phi-regulator. The regulator is powered by an auxiliary winding at the main stator.

Main components
- Main stator with frame
- Winding at two layers
- Terminal box includes main terminals plus auxiliary terminals for thermistor connection and control for regulator
- Main rotor with sufficiently sized shaft dynamically balanced as per VDI 2060, Grade Q1
- Drive end bracket with bearing
- Non-drive end bracket with bearing
- Exciter unit
- Power factor controller
- Voltage regulator
- Anti-condensation heater

Electrical data and features
- Voltage adjustment: +/- 10% rated voltage
- Static voltage accuracy: +/- 1% at no load to full load and power factor 0.8-1
- speed variation +/- 3%, cold and hot machine
- Maximum deviation of wave form according to VDE is 5% phase to phase at open circuit
- Generator suitable for parallel operating with mains and other generators
- Sustained short circuit current at 3-pole terminal short circuit: minimum 3 times rated current for 5 seconds.
- Overload capacity according. to IEC 32 - I/VDE 0530
- According to VDE 0530 the overspeed test ensues with 1.2 times of rated speed for 2 minutes.

Additional components:
- Electronic voltage regulator
- Electronic power factor regulator

- 3 Pt 100 for winding temperature monitoring
- 2 Pt 100 for bearing temperature monitoring
- Current transformer for protection and measuring uses

1.03 Module accessories

Base frame
Welded of structural steel to accommodate engine, generator and heat exchangers.

Flexible coupling
With torque limiter to couple engine with generator. The coupling isolates the major subharmonics of engine firing impulses from the generator.

Bell housing
To connect engine with generator housing. With two ventilation and control windows.

Anti-vibration mounts
Arranged between engine/generator assembly and base frame. Insulating pads (SYLOMER) for placement between base frame and foundation, delivered loose.

Exhaust gas connection
Connection of exhaust gas turbocharger; including flexible connection to compensate for expansions and vibrations.

Combustion air filter
Dry type air filter with replaceable filter cartridges, including flexible connection to carburetor and service indicator.

Interface panel
Totally enclosed sheet steel cubicle with front door, wired to terminals, ready to operate. Cable entry at bottom.

Painting: RAL 7035

Protection: IP 54 external IP 10 internal (protection against direct contact with alive parts)

Design according to IEC 439-1 (EN 60 439-1/1990) and DIN VDE 0660 part 500, respectively.
Ambient temperature 41 - 104 °F (5 - 40 °C), Relative humidity 70 %

Dimensions:
- Height: 51 in (1300 mm)
- Width: 47 in (1200 mm)
- Depth: 16 in (400 mm)

Power supply from the starter battery charger.

Power distribution to the engine mounted auxiliaries (power input from the supplier of the auxiliaries power supply):
3 x **480**/**277** V, **60** Hz, 50 A

Essential components installed in interface panel:
- Terminal strip
- Decentralized input and output cards, connected by a data bus interface to the central engine control of the module control panel.
- Speed monitoring
- Relays, contacts, fuses, engine contact switch to control valves and auxiliaries
- Measuring transducer for excitation voltage
- Air conditioning system

Exhaust gas scavenging blower
The exhaust gas scavenging blower is used to scavenge the remaining exhaust gas out of the exhaust gas pipe work, to prevent the appearance of deflagrations.

Function:
Before each start scavenging by blower is done for app. 1 minute (except at black out – start)

Supervisions:
- Scavenging air fan failure
- Scavenging air flap failure

Consisting of:
- Fan
- Exhaust gas flap
- Temperature switch
- Compensator and pipe work

1.03.02 Automatic lube oil replenishing system

Automatic lube oil replenishing system:
Includes float valve in lube oil feed line, including inspection glass. Electric monitoring system will be provided for engine shut-down at lube oil levels "MINIMUM" and "MAXIMUM". Solenoid valve in oil feed line is only activated during engine operation. Manual override of the solenoid valve, for filling procedure during oil changes is included.

Oil drain
By set mounted cock

Pre-lubrication- and aftercooling oil pump:
Mounted on the module base frame; it is used for pre-lubrication and aftercooling of the turbochargers.

Period of operation:	Pre-lubrication: 1 minute both pumps
	Aftercooling: 15 minutes from engine stop only the **480**/**277** V pump

Consisting of:
- 1 piece oil pump 1500 W, **480**/**277** V
- 1 piece oil pump 1500 W, 24 V
- All necessary vents
- Necessary pipework

1.05 Pre-chamber gas compressor

The pre-chamber gas compressor is used to increase the pressure of the gas, required for the pre-chamber from appr. 2,9 psi (200 mbar) to appr. 80 psi (5,5 bar)

Dimensions of the complete compressor unit:

- Length: appr. 90,6 in (2300 mm)
- Width: appr. 29,5 - 35,4 in (750 - 900 mm)
- Total hight: appr. 86,6 in (2200 mm)

Consisting of:

- Compressor
- Three-phase motor driven engine
- Solenoid valve at the gas compressor inlet
- Suction filter (=suction silencer)
- Starting relief installation with feedback
- Aftercooler for compressed gas with contensate drain
- Set of thermometers at the aftercooler
- Flexible hose to the pressure vessel
- Flexible connections at the compressor inlet and at the blowoff pipe
- Solenoid valves, transmitters and switches wired to the terminal box
- Pressure gas vessel with fittings and TÜV certificate for a pressure of 87 psi (6 bar)

1.07 Painting

- Quality: Oil resistant prime layer
  Synthetic resin varnish finishing coat

- Color:

Engine:	RAL 6018 (green)
Base frame:	RAL 6018 (green)
Generator:	RAL 6018 (green)
Module interface panel:	RAL 7035 (light gray)
Control panel:	RAL 7035 (light gray)

1.11 Engine generator control panel – DIA.NE XT

Dimensions:

- Height: 2200 mm (87 in) [including 200 mm (8 in) pedestal]
- Width: 1000 mm (40 in)
- Depth: 600 mm (24 in)

Control supply voltage from starter and control panel batteries: 24V DC

Supply of power for auxiliaries from auxiliary power panel:
3 x **480**/**277** V, **60** Hz, 35 A

Consisting of:
DIA.NE XT 3 (Dialog Network new generation) **motor management system**

System elements visualisation with central engine and module control

1) Visualisation:
Industrial control with 10,4“ QVGA TFT colour graphics display and 8 function keys.
10-key numeric keyboard for parameter input.
Keys for START, STOP, Generator circuit breaker OPEN, Generator circuit breaker CLOSED/SELECTED, display selection keys and special functions.
Interfaces:
- Ethernet (twisted pair) for connection to DIA.NE WIN server
- CAN-Bus: bus connection to the intelligent sensors and actuators
- Data bus connection to the control in- and outputs
  OPTION: Interfacing with the customer’s plant management according to GE JENBACHER list of options (MODBUS-RTU slave, PROFIBUS-DP slave)

Protection class: IP 65 (front)
Dimensions: W x H x D = approx. 212 x 255 x 95 mm (8,4 x 10 x 3,75 in)

A clear and functional graphic compilation of measured values is displayed on the screen. User prompts are by means of direct-acting display selection keys and function keys.

Main displays:
- Electrical schematic
- Oil and hydraulic schematic
- Gas data
- Engine controllers
- Cylinder data
- Exhaust gas data
- Auxilliaries controllers
- Spare screen for customer specific purposes
- System display screens
- Parameter manager
- User setting
- Alarm management

Recipe handling:
Setting, display and storage of all module parameters

Alarm management:
Efficient diagnostic instrumentation listing all active fault messages both tabular and chronologically, with the recorded time.

2) Central engine and module control:
A real-time, modular industrial control system which handles all jobs for module and engine-side sequencing control (start preparation, start, stop, synchronizing, after-cooling, control of auxiliaries), as well as all control functions.

Control functions:
- Speed control in no-load and isolated operation

- Power output control in parallel operation system; job-specific with respect to internal and external set point values.
- LEANOX control system for control of boost pressure; dependent upon the generator terminal power and the mixture temperature via the engine-driven air-gas mixer
- Knocking control: adjustment of the ignition point, power output and (insofar as is locally possible) the mixture temperature in the event of detection of knocking.
- Load sharing between several modules in isolated operation
- Linear reduction of power output in the event of excessive mixture temperature and ignition failures

- Interface relays as per the interface list
- Multi-transducer, to record the following electrically measured variables of the generator:
  - Phase current (with slave pointer)
  - Neutral conductor current
  - Voltages Ph/Ph and Ph/N
  - Active power (with slave pointer)
  - Reactive power
  - Apparent power
  - Power factor
  - Frequency

An additional 0 - 20 mA output is produced for active power, as well as a pulse output for active power demand.

The following alternator supervisions are integrated with the multi-transducer (max. 8 functions simultaneous):

- Overload/short-circuit [51], [50]
- Over voltage [59]
- Undervoltage [27]
- Asymmetric voltage [64], [59N]
- Unbalance current [46]
- Failure Exitation [40]
- Overfrequency [81>]
- Underfrequency [81<]
- Lockable operation mode selector switch positions:
  - "OFF"
    No operation is possible, running set will shut down;
  - "MANUAL"
    Manual operation using (start, stop) is possible, unit is not available for fully automatic operation.
  - "AUTOMATIC"
    Fully automatic operation, according to remote demand signal:
    - Automatic start
      Fully automatic operation at full load
    - Stop with cooling down run for 1 minute
      Continuous operation of auxiliaries for 5 minutes after engine shutdown
- Demand switch with the positions:
  - Demand OFF
  - Demand ON
  - Remote demand
- Supply disconnecting device for auxiliaries with lockable circuit breaker

Shut-down functions with display:

- Low lube oil pressure

- Low lube oil level
- High lube oil level
- High lube oil temperature
- Low jacket water pressure
- High jacket water pressure
- High jacket water temperature
- Overspeed
- Emergency stop/safety loop
- Gas train failure
- Start failure
- Stop failure
- Engine start blocked
- Engine operation blocked
- Misfiring
- High mixture temperature
- Measuring signal failure
- Overload/output signal failure
- Generator overload/short circuit
- Generator over/undervoltage
- Generator over/underfrequency
- Generator asymmetric voltage
- Generator unbalanced load
- Generator reverse power
- High generator winding temperature
- Synchronising failure
- Knocking failure

Warning functions with display:
- Low jacket water temperature
- CPU battery failure

Operational functions with display:
- Ready to start
- Operation (engine running)
- Generator circuit breaker "CLOSED"

Remote signals:
(volt free contacts)

1NO = 1 normally open
1NC = 1 normally closed
1 COC = 1 change over contact

• Ready for automatic start (to Master control)	1NO
• Operation (engine runs)	1NO
• Collective signal "shut down"	1NC
• Collective signal "warning"	1NC

External (by others) provided command/status signals:

• Engine demand (from Master control)	1NO

Single synchronizing Automatic
With voltage balance

For automatic synchronizing of the module with the generator circuit breaker to the grid by PLC-technology, integrated within the module control panel.

Consisting of:

- Lockable synchronizing mode selector switch, with positions "MANUAL - 0FF - AUTOMATIC"
  - AUTOMATIC:
    Automatic module synchronization, after synchronizing release from the control panel
  - MANUAL:
    Manual initiation of synchronizing by push button. Speed adjustment and closing of the circuit breaker is automatically controlled via microprocessor
  - OFF:
    Synchronization is disabled
- Additional PLC hardware for the fully automatic synchronizing of each module, and monitoring of the "CIRCUIT BREAKER CLOSED" signal.
  Logic for monitoring of:
  - Non-logic breaker positions
  - Switch ”ON” trouble
  - Switch ”OFF” trouble
- Automatic synchronizing device to control the electronic speed governor adjustment, double voltmeter, double frequency meter and synchronoscope
- Automatic voltage balancing
- Luminous push button “GENERATOR CIRCUIT BREAKER OPEN / SELECT”
  - To indicate synchronizing mode
  - To indicate “Generator circuit breaker closed”
  - For manual synchronizing selection with the synchronizing mode selector switch in the MANUAL position
  - For manual closing of the generator circuit breaker to the voltage free bus bar (first connection) with synchronizing mode selector switch in the MANUAL position
- Luminous push button “GENERATOR CIRCUIT BREAKER OPEN”
  - To indicate “Generator circuit breaker open”
  - To manually open the generator circuit breaker
- Control switch
- Required relays for control and monitoring
- Voltage relay for monitoring of bussbar voltage (only for island operation)

Operational indications for:

- Generator circuit breaker CLOSED
- Generator circuit breaker OPEN

Fault indications for:

- Generator circuit breaker return signal fault
- Generator circuit breaker closing fault
- Generator circuit breaker opening fault

Remote signals
(Volt free contacts)

- Generator circuit breaker CLOSED 1 NO

The following reference and status signals must be provided by the switchgear supplier:

Generator circuit breaker CLOSED	1 NO
Generator circuit breaker OPEN	1 NO
Generator circuit breaker READY TO CLOSE	1 NO
Mains circuit breaker CLOSED	1 NO
Mains circuit breaker OPEN	1 NO

- Mains voltage 3x 110V/v3 – other measurement voltages available on request
- Bus bar voltage 3x 110V/v3 – other measurement voltages available on request
- Genrator voltage 3 x **13,8 kV** or 3x 110V/v3 – other measurement voltages available on request

Voltage transformers in star point with minimum 50VA, Class 1

The following volt free interface-signals will be provided by GE Jenbacher to be incorporated in switchgear:

- CLOSING/OPENING command for generator circuit breaker (permanent contact) 1 NO + 1 NC
- Signal for circuit breaker undervoltage trip 1 NO

- Power supply and controls CO2 valve

1.11.03 Remote Data-Transfer with DIA.NE XT - HERMES

General

HERMES is the remote data transfer solution for DIA.NE XT. HERMES is available via three connection methods and two applications.

Connections methods

1.) Modem

Site - Customer connection via a Modem (analogue, ISDN, GSM).

Scope of supply

- DIA.NE WIN – Server (Industrial PC without display, keyboard or mouse, built into the control panel, including operating system)
- Modem (analogue, ISDN, GSM)

Customer Requirements

- Modem (analogue, ISDN, GSM) in the customers PC
- Public telephone connection with connection port for the DIA.NE WIN – Server (in the control panel) including over-voltage protection corresponding to the local telecommunication regulations.
- Public telephone connection with connection port for the customer's PC corresponding to the local telecommunication regulations.

2.) LAN

Site - Customer connection via a local network.

Scope of supply
- DIA.NE WIN – Server (Industrial PC without display, keyboard or mouse, built into the control panel, including operating system)
- Ethernet – Network card (10/100 BASE T)

Customer Requirements
- Ethernet – Network card (10/100 BASE T)
- Ethernet – Cabling between the DIA.NE WIN – Server the customers PC.

3.) Internet
Site – Customer connection via secure Internet access
See comments under Technical instruction **TI 2300 - 0006**

Scope of Supply
- DIA.NE WIN – Server (Industrial PC without display, keyboard or mouse, built into the control panel, including operating system)
- Ethernet–Network card (10/100 BASE T)
- Firewall–Appliance with connection feasibility to a customer network with a maximum of 10 Hosts (Installation and service by GE Jenbacher; during warranty period included, afterwards as a service package with costs) (built into the control panel)
- Feature – service package (access monitoring, clock synchronization for server)

Customer Requirements
- Broad band Internet access with at least two official IP addresses.
  Connection feasibility for the Firewall–Appliance to the Internet–Router via Ethernet
  (RJ45 Connector, Network Address Translation (NAT) is not permitted)

Applications

1.) DIA.NE WIN
DIA.NE WIN is the Windows based „man-machine interface“ for GE Jenbacher gas engines. The system offers extensive facilities for commissioning, monitoring, servicing and analysis of the site. The option DIA.NE WIN extends the visualization of DIA.NE XT with respect to user friendliness, historical analysis and remote use. Several service stations can be independently operated in parallel. The system consists of a central PC (DIA.NE WIN – Server) which is built in to the control panel and one or more service stations (DIA.NE WIN – Clients). The system runs on a Microsoft Internet Explorer platform.

Function
Service and monitoring, trend analysis, alarm management, parameter management, long-term data analysis, multi-user system, remote control, OPC (OLE for process control), print and export functions, operating data protocols, available in several languages.

Scope of supply
- Software package DIA.NE WIN on the DIA.NE WIN – Server
- DIA.NE WIN – Client License (Right to access of the user to the server on site)

Customer requirements
- Standard PC with keyboard, mouse and monitor (min. resolution 1024*768)

- **120** V supply for the customers' PC
- Operating system Windows 98, Windows NT, Windows 2000 or Windows XP
- Microsoft Internet Explorer (min. Version 6.0) including Java support

2.) DIA.NE RMC (Option)
DIA.NE RMC (Remote Message Control) is the automatic alarm system for DIA.NE XT. DIA.NE RMC can fully automatically transmit essential operational information from the DIA.NE XT Alarm Management to a remote station. The messages can be forwarded to an e-mail address, fax machine or mobile phone (SMS). Furthermore the stored messages can be visualized at the remote station. The system consists of a central PC (DIA.NE WIN – Server) which is built into the control panel and one or more customer remote stations.

Function
Automatically transfer of messages to the customer via email, fax or SMS. Display and printing of the messages (also distributed via LAN). Automatically and manually transfer of messages, trend data and operating data protocols.

Scope of supply
- Software package DIA.NE message on the DIA.NE WIN – Server
- Software package DIA.NE control and DIA.NE report on the remote station

Only for connection method "Internet":
- Firewall–Appliance for customer computer with connection feasibility to a customer network with a maximum of 10 Hosts (Installation and service by GE Jenbacher; during warranty period included, afterwards as a service package with costs)

Customer requirements
- Standard PC with keyboard, mouse and monitor (min. resolution 1024*768)
- **120** V supply for the customers' computer.
- Operating system Windows 2000 (Professional and Server), Windows XP Professional or Windows Server 2003.
- Internet connection (provider account) for the case that messages from the RMC should be forwarded to an email receiver (incl. SMS for mobiles and pagers). (Mobiles and pagers to be provided by the customer).
- Customer fax software for message forwarding via fax

Only for connection method "Internet":
- Broad band Internet access with at least two official IP addresses.
  Connection feasibility for the Firewall–Appliance to the Internet–Router via Ethernet
  (RJ45 Connector, Network Address Translation (NAT) is not permitted)

1.20.01 Starting system

Starter battery:
2 x 2 piece Pb battery with 12 cells, 2 x 12 V, 400 Ah (according to DIN 72311), complete with cover plate, terminals and acid tester.

Battery voltage monitoring:
Monitoring by an under voltage relay.

Battery charging equipment:

Capable for charging the starter battery with I/U characteristic and for the supply of all connected D.C. consumers.
Charging device is mounted inside of the module interface panel or module control panel.

- **General data:**

• Power supply	**3 x 320 - 550 V, 47 - 63 Hz**
• max. power consumption	2120 W
• Nominal D.C. voltage	24 V(+/-1%)
• Voltage setting range	24V to 28,8V (adjustable)
• Nominal current (max.)	2 x 40 A
• Dimensions	ca. 10 x 5 x 5 inch (240 x 125 x 125 mm)
• Degree of protection	IP20 to IEC 529
• Operating temperature	32 °F – 140 °F (0 °C - 60 °C)
• Protection class	1
• Humidity class	3K3, no condensation.
• Natural air convection	
• Standards	EN60950,EN50178 UL/cUL (UL508/CSA 22.2)

Signalling:

Green Led:	Output voltage > 20,5V
Yellow Led:	Overload, Output Voltage < 20,5V
Red Led:	shutdown

Control accumulator:
- Pb battery 24 VDC/18 Ah

1.20.03 Electric jacket water preheating

Installed in the jacket water cooling circuit, consisting of:
- Heating elements
- Water circulating pump

The jacket water temperature of a stopped engine is maintained between 133 °F (56°C) and 140°F (60°C), to allow for immediate loading after engine start.

2.00 Electrical equipment

Totally enclosed floor mounted sheet steel cubicle with front door wired to terminals. Ready to operate, with cable entry at bottom. Naturally ventilated.

Protection:	IP 40 external, NEMA 12 IP 10 internal (protection against direct contact with live parts)

Design according to EN 60439-1 / IEC 60439-1 and ISO 8528-4.
Ambient temperature 41 - 104 °F (5 - 40 °C), 70 % Relative humidity

Standard painting:	Panel:	RAL 7035
	Pedestal:	RAL 7020

2.02 Grid monitoring device

Function:
For immediate disconnection of the generator from the grid in case of grid failures.

Consisting of:
- High/low voltage monitoring
- High/low frequency monitoring
- Specially adjustable independent time for voltage and frequency monitoring
- Vector jump monitoring or df/dt monitoring for immediate disconnection of the generator from the grid for example at short interruptions
- Indication of all reference dimensions and adjustable parameters for normal operation and at the case of disturbance over LCD and LED
- Adjusting authority through password protection against adjusting of strangers

Scope of supply:
Digital grid protecting relay with storage of defect data, indication of reference dimensions as well as monitoring by itself.

The 3 x 400/100 V voltage signal must be made available by the customer to the GE JENBACHER terminal strip.

4.00 Delivery, installation and commissioning

4.01 Carriage
Ex works GE JENBACHER

4.02 Unloading
Unloading, moving of equipment to point of installation, mounting and adjustment of delivered equipment on intended foundations **is not** included in GE Jenbacher scope of supply.

4.03 Assembly and installation
Assembly and installation of all GE Jenbacher -components **is not** included in GE Jenbacher scope of supply.

4.04 Storage
The customer is responsible for secure and appropriate storage of all delivered equipment.

4.05 Start-up and commissioning
Start-up and commissioning with the GE Jenbacher start-up and commissioning checklist **must be ordered separately**.

4.06 Trial run
After start-up and commissioning, the plant will be tested in an 8-hour trial run. The operating personnel will be introduced simultaneously to basic operating procedures.

4.07 Emission measurement (exhaust gas analyser)
Emission measurement by GE Jenbacher personnel, to verify that the guaranteed toxic agent emissions have been achieved (costs for measurement by an independent agency will be an extra charge).

5.02 Factory tests and inspections

The individual module components shall undergo the following tests and inspections:

5.02.01 Engine tests

Carried out as combined Engine- and Module test according to DIN ISO 3046 at GE Jenbacher test bench. The following tests are made at 100%, 75% and 50% load, and the results are reported in a test certificate:

- Engine output
- Fuel consumption
- Jacket water temperatures
- Lube oil pressure
- Lube oil temperatures
- Boost pressure
- Exhaust gas temperatures, for each cylinder

5.02.02 Generator tests

Carried out on the premises of the generator supplier.

5.02.03 Module tests

The engine will be tested with natural gas (Russian Natural gas with methane number 94). The technical data according to the specification can only be demonstrated to a certain extent with the available natural gas.

Carried out as combined Engine- and Module test commonly with module control panel at GE Jenbacher test bench, according to ISO 8528, DIN 6280. The following tests are made and the results are reported in a test certificate:

Visual inspection of scope of supply per specifications.

- Functional tests per technical specification of control system.
  - Starting in manual and automatic mode of operation
  - Power control in manual and automatic mode of operation
  - Function of all safety systems on module
- Measurements at 100%, 75% and 50% load:
  - Frequency
  - Voltage
  - Current
  - Generator output
  - Power factor
  - Fuel consumption
  - Lube oil pressure
  - Jacket water temperature
  - Boost pressure
  - Mixture temperature
  - Exhaust emission (NOx)

The module test for operating frequenzy 50 Hz and 6,3-6,6kV / 10,5kV-11kV will be carried out with the original generator, except it is not possible because of the delivery date. Then a test generator will be used for the module test.

To prove characteristics of the above components, which are not tested on the test bench by GE JENBACHER, the manufacturers' certificate will be provided.

5.03 Documentation

Preliminary documentation 60 days after receipt of a technically and commercially clarified order:

- Module drawing 1)
- Technical diagram 1)
- Drawing of control panel 3)
- List of electrical interfaces 2)
- Technical specification of control system 2)
- Technical drawing auxiliaries (if included in GE Jenbacher-limit of delivery) 1)

At delivery:

- Wiring diagrams 3)
- Cable list 3)

At start-up and commissioning (or on clients request):

- Operating and maintenance manual 4)
- Spare parts manual 4)
- Operation report log 4)

Available Languages
1) DEU, GBR
2) DEU, GBR, FRA, ITA, ESP
3) DEU, GBR, FRA, ITA, ESP, NLD, HUN, RUS, POL, TUR, CZE
4) DEU, GBR, FRA, ITA, ESP, NLD, HUN, RUS, POL, TUR, CZE, SLOWEN, SLOWAK, SERB, SCHWED, ROM, PRT, NORWEG, LITAU, LETT, BULGAR, CHINA, DNK, ESTN, FIN, GRC, KROAT

APPENDIX B

Appendix B: CHP Unit 2 Equipment Drawings

Drawing Index

Drawing Name	Description
Exhaust Purifier Sequence (to scale)	Exhaust Purifier Sequence (to scale)
PID	Complete Thermal Schematic Around Engine
Site Plan	Site plan of entire greenhouse complex showing location of Co-gen 2
Top view Co-gen 2 include plumbing	Plan View with Plumbing
CEC grant map HNL Layout	Plan View Schematic with Hot Water and Instrumentation
COdiNox Housing Drawing	COdiNox Housing Drawing
Different views Co-gen 2 include plumbing	3 Views including Isometric
Electrical Drawings	Electrical Drawings
Engine and Enclosure	Plan View
Engine P&ID	Piping and Instrumentation Diagram

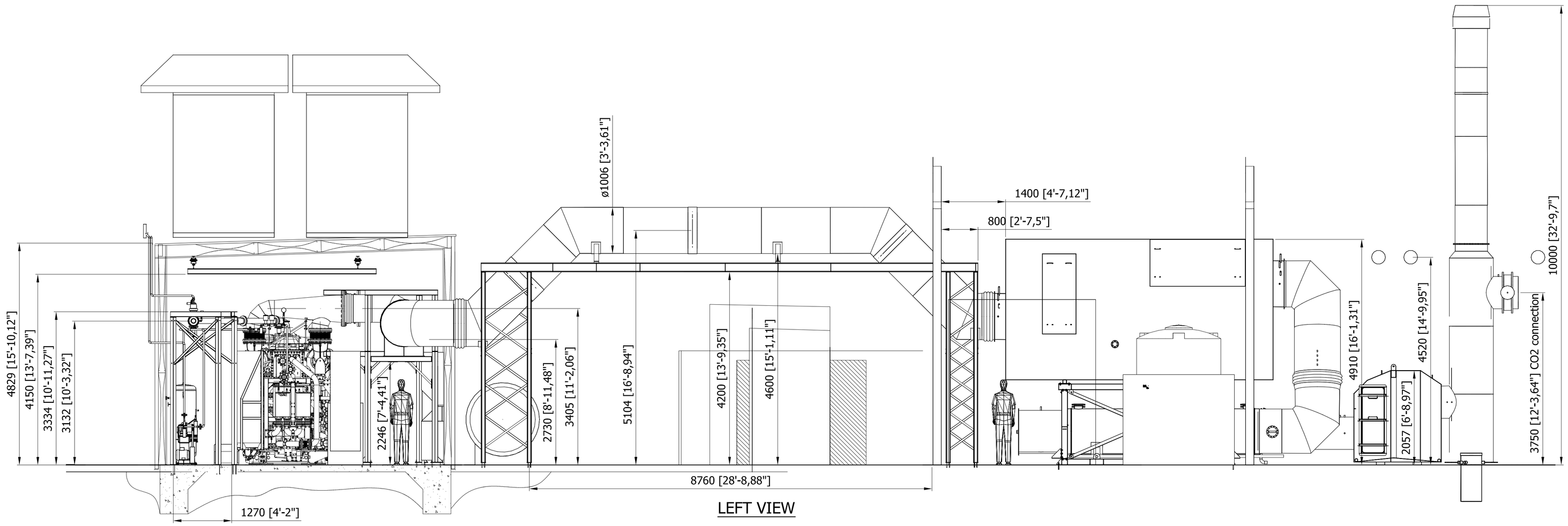

LEFT VIEW

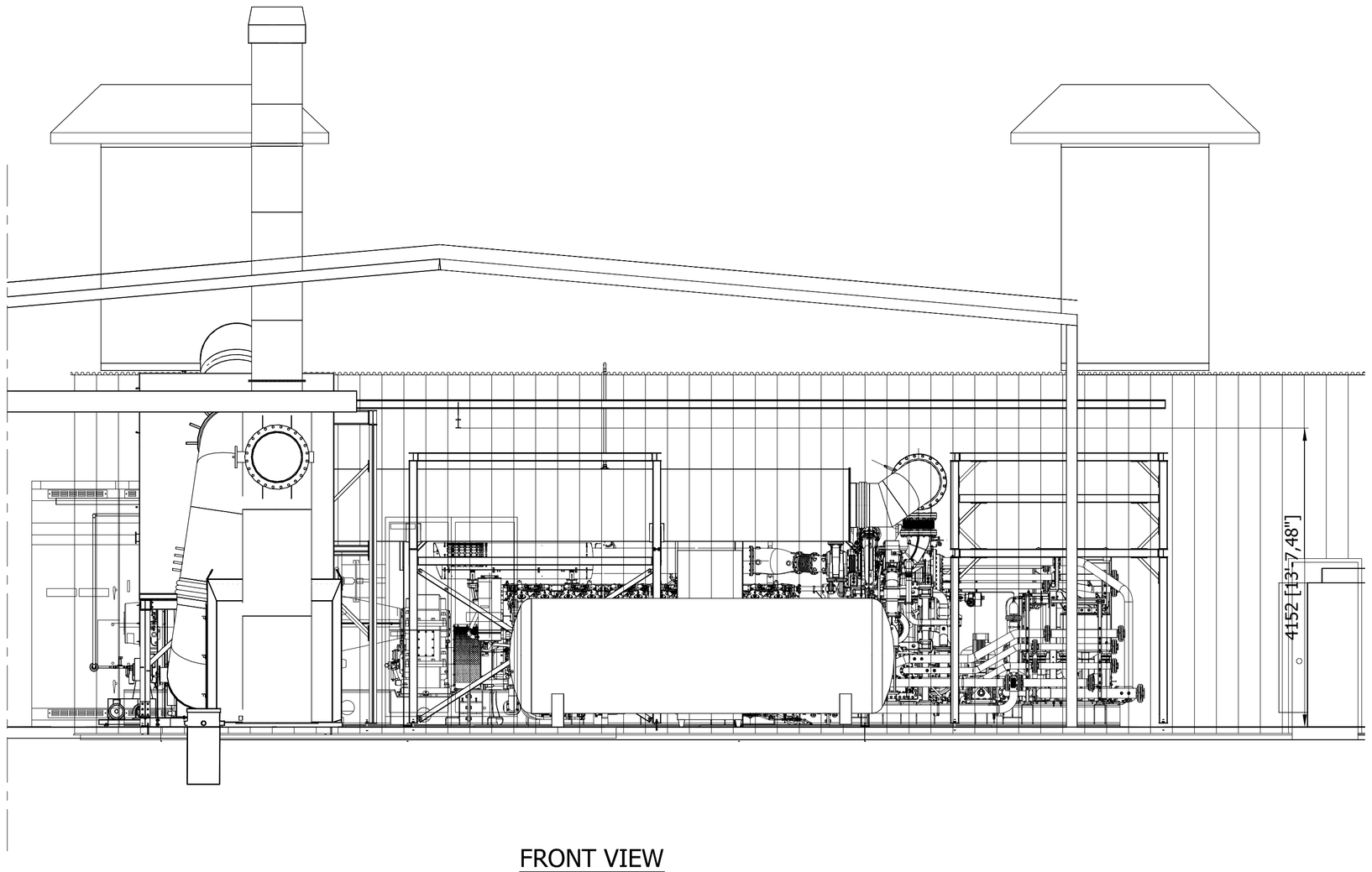

FRONT VIEW

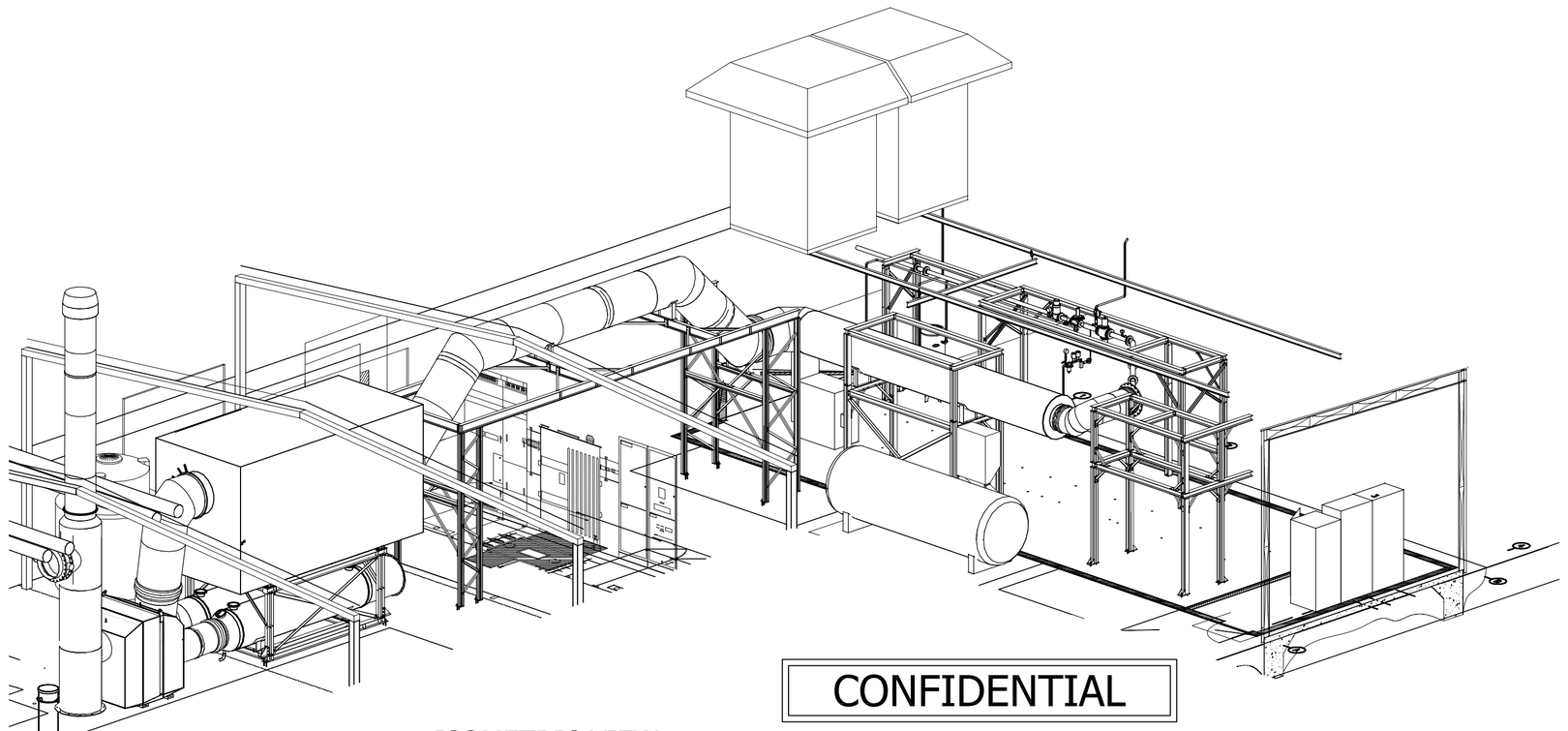

ISOMETRIC VIEW

CONFIDENTIAL

REVISED AS MARKED		
Approved by:	Date:	Initial:

REV.	DRW.	DATE	DESCRIPTION	CHKD.
M	EjR	190613	Revised as marked	
L	EjR	280513	Engine fundation changed to ground level	
K	JV	180213	comenponent lay-out completely changed	RH
J	JV	290113	Revised as marked	RH

REV.	DRW.	DATE	DESCRIPTION	CHKD.
I	JV	121212	Revised as marked	RH
H	RH	180711	Engine drawing added, dimensions to US units	
G	RH	130611	Drawing of building added	
F	RH	270411	Changed after meeting at location	
E	RH	070311	Latest situation drawing (2011-03-04) added	

PROJECTNUMBER: 4075	PROJECT: Houweling Location 2	REF. NR.: J K214	REF. NR. CLIENT
CLIENT:		DRAWN: J. van Waas	DATE: 17-09-2010
TITLE: JMS 624 4,4 MW + Exhaust Purifier Component Lay-out - Side Views		CHECKED: M. Reynolds	DATE: 17-09-2010
		SCALE: 1:50	FORMAT: A_1

Jenbacher gas engines

Jenbacher BV * Kelvinring 58 * 2952 BG Alblasserdam
The Netherlands * Tel: +31/88/0019700 * Fax: +31/88/0019701
Website: www.gejenbacher.com * e-mail: jenbacher.netherlands@ge.com

ALL RIGHTS STRICTLY PRESERVED REPRODUCTION OR ISSUE TO THIRD PARTIES IS NOT PERMITTED WITHOUT WRITTEN AUTHORITY OF GE JENBACHER BV

PROJECTION:

DRAWING NUMBER: 10-0564E-02

REVISIE: M

PRELIMINARY

ENGINE EXHAUST FLOW
THERMAL DESIGN 676°/104° F.
9,897,000 BTU/HR.
10,594 CFM (DRY), 9,512 CFM (WET)

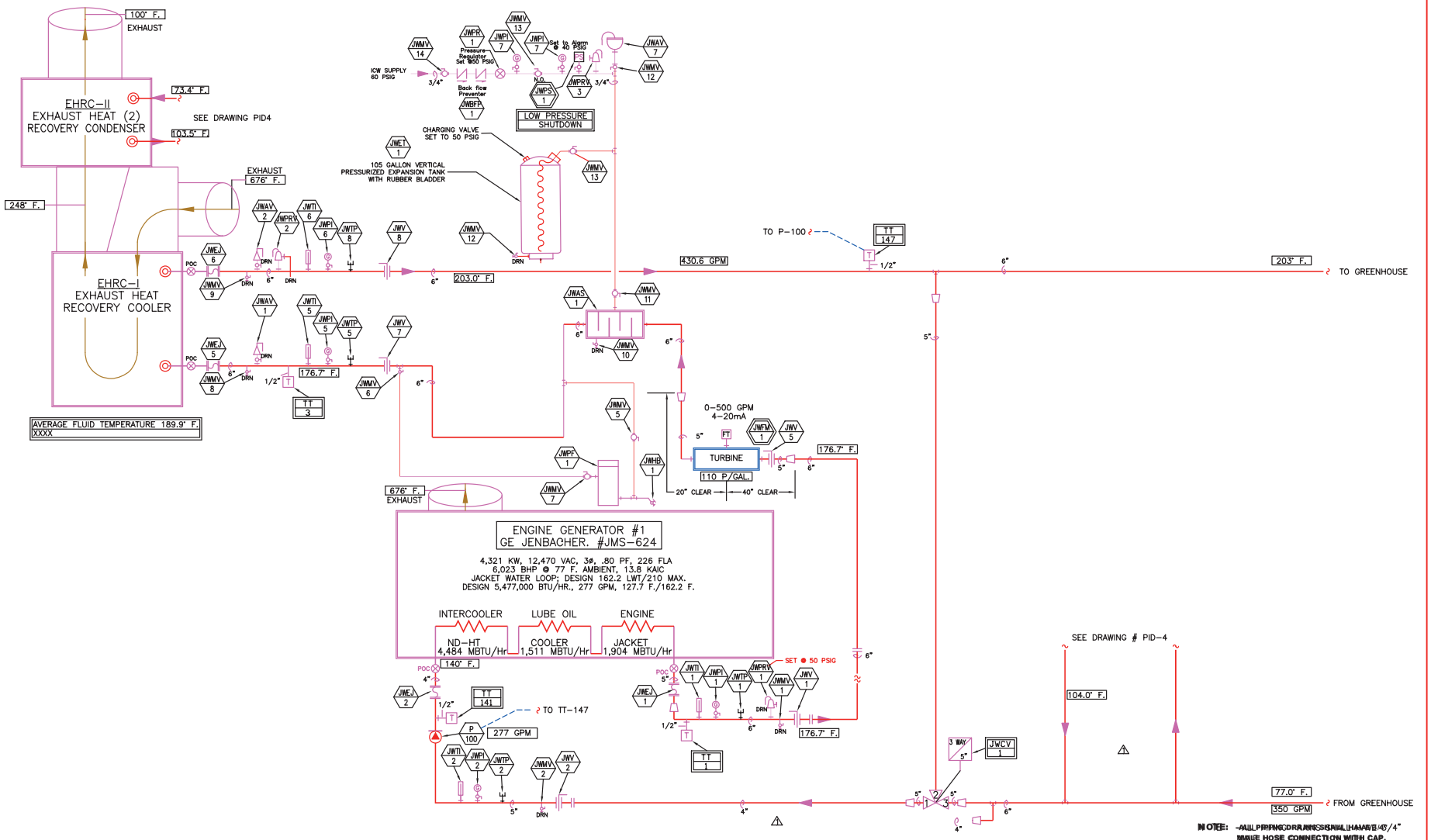

NOTE: -ALL PIPING DRAINS SHALL HAVE 3/4" MALE HOSE CONNECTION WITH CAP.
-INSULATION SHALL BE 2" COVERED WITH COLORED PVC JACKET.

ENGINE GS-1 (TYPICAL OF GS-2 & GS-3) HOT WATER LOOP PROCESS DIAGRAM #1
TREATED WATER; MAXIMUM OPERATING PRESSURE 80 PSIG, MINIMUM 40 PSIG
SCHEDULE 40-CARBON STEEL; DESIGN CLASS 350 @ 200° F.

This drawing is proprietary and cannot be reproduced or copied, in any form, without expressed permission, in writing, from CONTROL TECHNOLOGY.

REVISIONS	BY
06/20/12	JC

HOUWELING NURSERY
CENTRAL PLANT
COMPLETION

CONTROL TECHNOLOGY
2416 CADES WAY
VISTA, CA 92083
PHONE (760) 599–0086
FAX (760) 599–1815

Date	12/29/11
Scale	N/A
Drawn	JB
Job	11067
Sheet	3
	PID–3
Of	11 Sheets

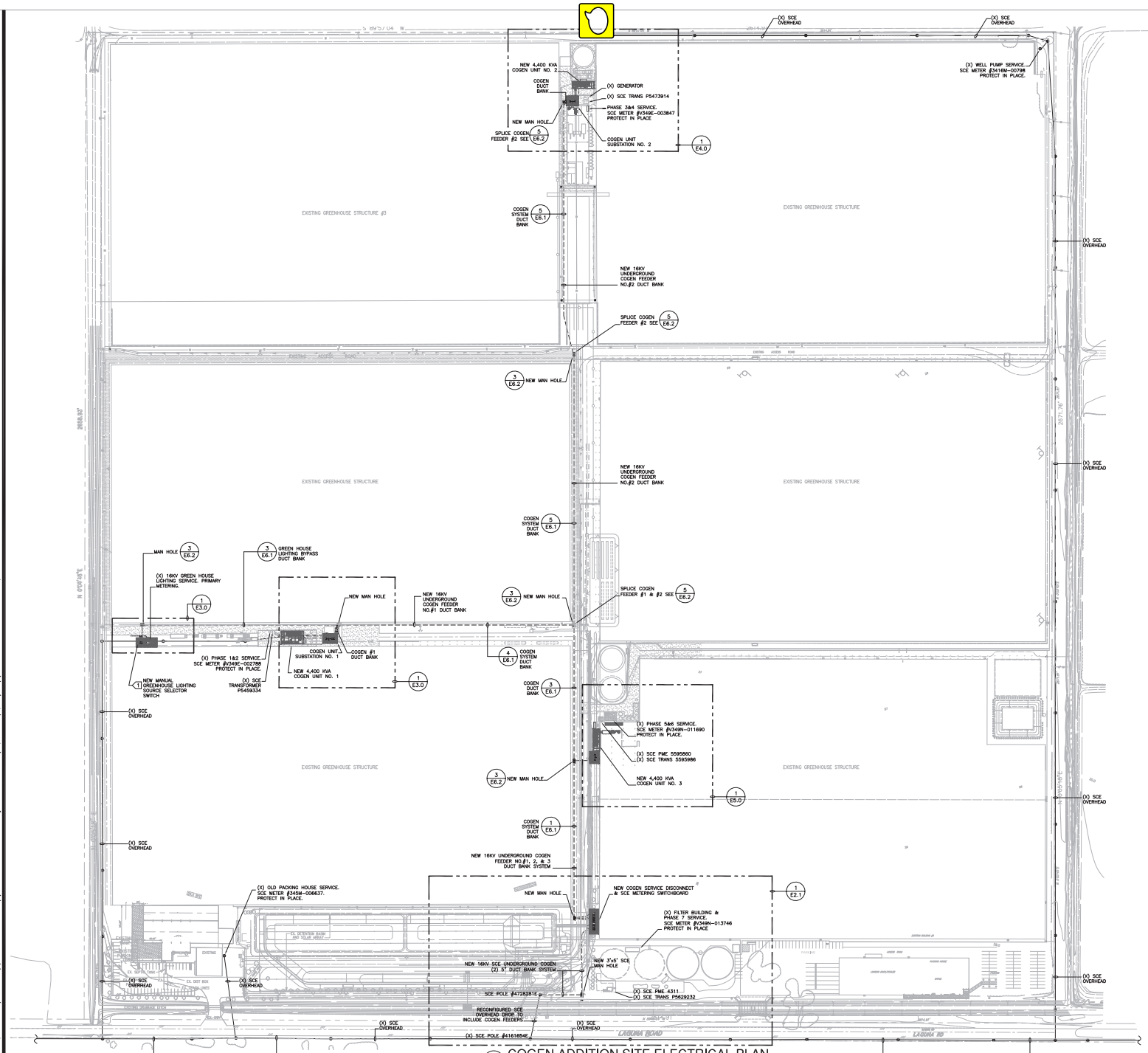

1 COGEN ADDITION SITE ELECTRICAL PLAN
SCALE: 1" = 100'-0"

SHEET NOTES

1. VERIFY LOCATION OF ALL BUILDINGS AND APPENDITURES ON ARCHITECTURAL AND CIVIL PLANS.
2. CONTRACTOR SHALL VERIFY LOCATION & REQUIREMENTS OF ALL ELECTRICAL DEVICES PRIOR TO BID. ROUGH-IN & INSTALLATION.
3. CONTRACTOR SHALL, IN ROUTING ALL CIRCUITS, INCREASE CONDUCTOR & CONDUIT SIZE TO ALLOW FOR VOLTAGE DROP SHOULD THE CONTRACTOR EXCEED ROUTING INDICATED ON DRAWING. ENGINEER OF RECORD MUST BE NOTIFIED PRIOR TO ANY DEVIATIONS FROM APPROVED PLAN CHECK (PERMIT SET) DRAWINGS.
4. FIELD VERIFY LOCATION OF ALL UNDERGROUND UTILITIES PRIOR TO TRENCHING. SCHEDULE AND COORDINATE ALL SITE WORK WITH OWNER PRIOR TO ANY TRENCHING.
5. CONTRACTOR SHALL COORDINATE AND PROVIDE ALL SITE ELECTRICAL SERVICE REQUIREMENTS WITH SERVING UTILITY.
6. ALL SERVICE ENTRANCE EQUIPMENT SHOP DRAWINGS SHALL BE SUBMITTED TO THE LOCAL UTILITY COMPANY FOR APPROVAL, WITH WRITTEN APPROVAL RECEIVED PRIOR TO SUBMISSION TO ELECTRICAL ENGINEER FOR APPROVAL.
7. VERIFY LOCATION OF ALL EQUIPMENT AND DEVICES ON ARCHITECTURAL AND CIVIL PLANS.
8. 5'-0" MINIMUM RADIUS SWEEPS FOR HIGHT VOLTAGE DUCTS. MINIMUM CONDUIT BURIAL DEPTH IS 24" 0-600 VOLT SYSTEMS. 36" FOR 600V-25KV SYSTEMS.
9. COORDINATE WORK WITH OTHER TRADES. OBTAIN ALL DRAWINGS THAT WILL REQUIRE COORDINATION AND PROVICE ALL ELECTRICAL CONNECTIONS, DEVICES, AND WIRING REQUIRED WHETHER SHOWN ON ELECTRICAL DRAWINGS OR NOT.
10. CONTRACTOR SHALL FURNISH AND INSTALL PULL BOXES AS REQUIRED TO INSTALL CONDUCTORS PER CONDUCTOR MANUFACTURERS RECOMMENDATIONS, PER THE NATIONAL ELECTRICAL CODE AND PER LOCAL AUTHORITIES HAVING JURISDICTION.
11. FIELD CONDITIONS GOVERN DEMOLITION AND NEW CONSTRUCTION. CONTRACTOR SHALL VERIFY ACTUAL CONDITIONS PRIOR TO START OF WORK, ARCHITECT / ENGINEER SHALL BE NOTIFIED OF POSSIBLE FIELD PROBLEMS PRIOR TO DEMOLITION. CONTRACTOR SHALL NOTIFY DISTRICT REPRESENTATIVE OF WORK BEING PERFORMED. COORDINATE WITH DISTRICT REPRESENTATIVE.
12. CONTRACTOR SHALL FIELD VERIFY LOCATION OF ALL UNDERGROUND UTILITIES PRIOR TO ANY EXCAVATION OF TRENCHING, CONTRACTOR SHALL PROTECT ALL EXISTING / REMAINING UTILITIES IN PLACE. CONTRACTOR AT HIS SOLE EXPENSE, SHALL REPAIR ANY UTILITIES SYSTEM DAMAGED DURING CONSTRUCTION.
13. VERIFY & PROVIDE ALL UTILITY SYSTEMS PER SERVING UTILITY STANDARD REQUIREMENTS.

KEY NOTES

1. INTERCEPT EXISTING GREENHOUSE LIGHTING SYSTEM HIGH VOLTAGE DISTRIBUTION SYSTEM FEEDER AND CUT IN NEW MANUAL TRANSFER SWITCH. SEE DRAWING E2.2 FOR ADDITIONAL INFORMATION.

NOTE: ALL UTILITY LOCATIONS ARE APPROXIMATE. CONTRACTOR SHALL NOTIFY UNDERGROUND SERVICE ALERT & PAY FOR ON CAMPUS SITE UTILITY SURVEY PRIOR TO STARTING ANY EXCAVATION WORK.

DIGALERT
DIAL TOLL FREE 1-800-422-4133 AT LEAST TWO DAYS BEFORE YOU DIG
UNDERGROUND SERVICE ALERT(USA) OF SOUTHERN CALIFORNIA

PLAN NORTH

PERMIT SUBMITTAL

C. Hood & Associates, Inc.
CONSULTING ELECTRICAL ENGINEERS
858 East Front Street
Ventura, California 93001
Phone (805) 641-0012
Fax (805) 641-0450
www.choodassociates.com

REGISTERED PROFESSIONAL ENGINEER
13392
EXP. 6-30-11
ELECTRICAL

DIENER'S SINCE 1946
electric, inc.
1633 Pine St., Oxnard, Ca. 93030
P. (805) 483-4123 F. (805) 385-0180

Sheet COGEN ADDITION
Title SITE ELECTRICAL PLAN

Revisions	
REV. 1 12-30-10	

CHKD. No:	10-859
Date:	6/02/11
Drawn:	A.MOKGON
Checked:	C.HOOD
Compit. No:	6/2/2011

HOUWELING'S
HOT HOUSE

HOUWELING NURSERIES
COGEN ADDITION PROJECT
SCE REQUEST WD7661
845 W. LAGUNA ROAD
CAMARILLO, CALIFORNIA

Sheet No.
E2.0

file path and name:
© Hood & Associates, Inc. reserves ownership to ownership rights to these drawings. These drawings are not to be reproduced, changed or copied in any manner or form or are they to be assigned to a third party without obtaining written permission and consent of C. Hood & Associates, Inc. in the event of the unauthorized reuse of these plans by a third party, the third party and said C. Hood & Associates, Inc. hereunder, these drawings, including the digital, incorporated herein, are instruments of professional service prepared for use in connection with this project entitled, therein and the conditions relating or date shown in title block. Any re-use, in whole or in part, for any other project without written authorization of C. Hood & Associates, Inc. shall be at user's sole risk.

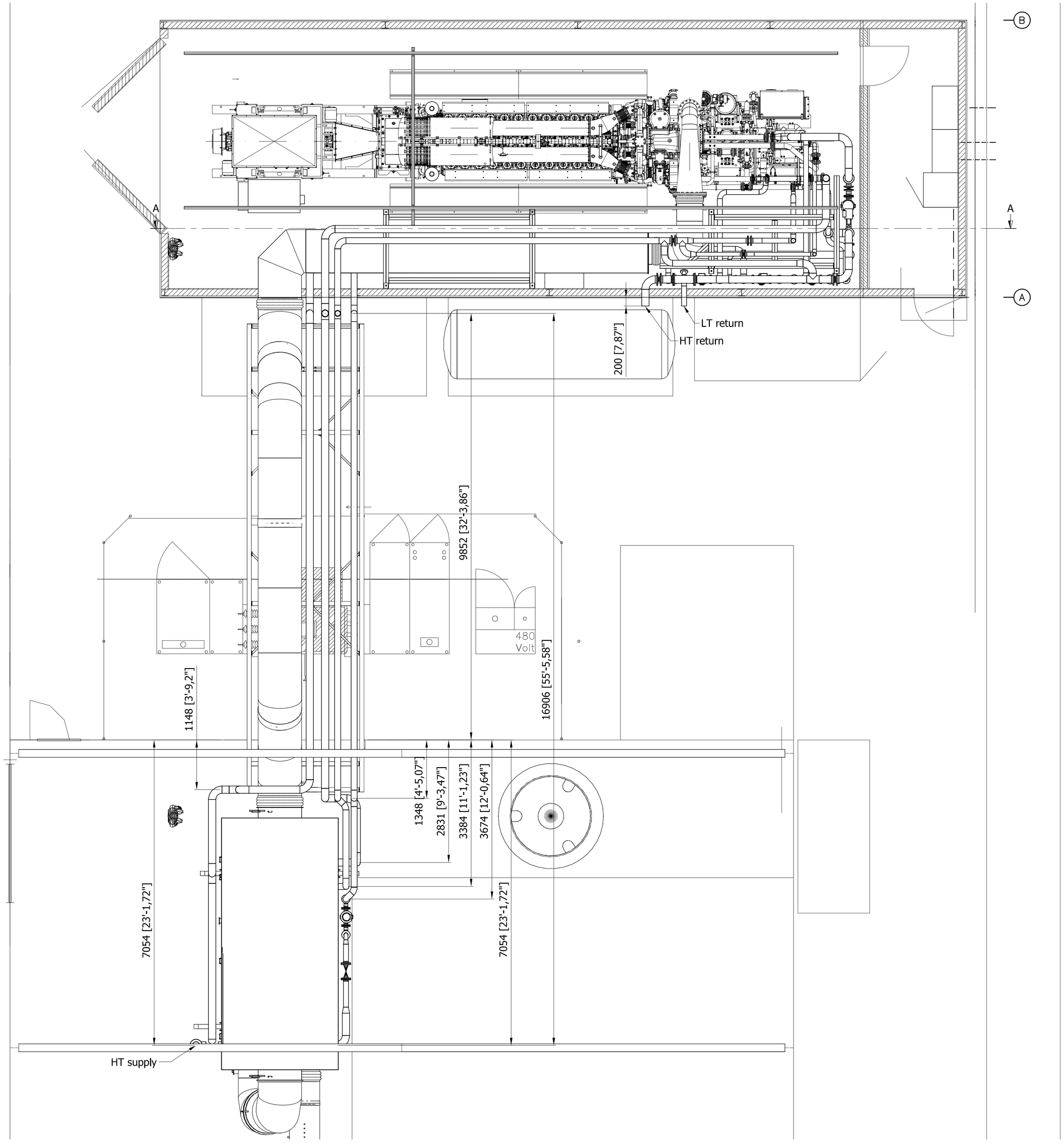

TOP VIEW

CONFIDENTIAL

REVISED AS MARKED		
Approved by:	Date:	Initial:

REV.	DRW.	DATE	DESCRIPTION	CHKD.
D	EJR	250613	Several changes	JV
C	EJR	180613	Piping changed	JV
B	JV	140313	Piping lay-out completely changed	RH
A	JV	290113	Revised as marked	RH
0	JV	211212	First Issue	RH

PROJECTNUMBER: 4075	PROJECT: Houweling Location 2	REF. NR.: J K214	REF. NR. CLIENT
CLIENT:		DRAWN: J Vllelander	DATE: 21-12-2012
TITLE: JMS 624 4,4 MW Piping Lay-out - Top View		CHECKED: R Heller	DATE: 21-12-2012
		SCALE: 1:50	FORMAT: A1
Jenbacher gas engines		ALL RIGHTS STRICTLY PRESERVED REPRODUCTION OR ISSUE TO THIRD PARTIES IS NOT PERMITTED WITHOUT WRITTEN AUTHORITY OF GE JENBACHER BV	PROJECTION:
		DRAWING NUMBER: 10-0564E-06	REVISIE: D

Jenbacher BV * Kelvinring 58 * 2952 BG Alblasserdam
The Netherlands * Tel: +31/88/0019700 * Fax: +31/88/0019701
Website: www.gejenbacher.com * e-mail: jenbacher.netherlands@ge.com

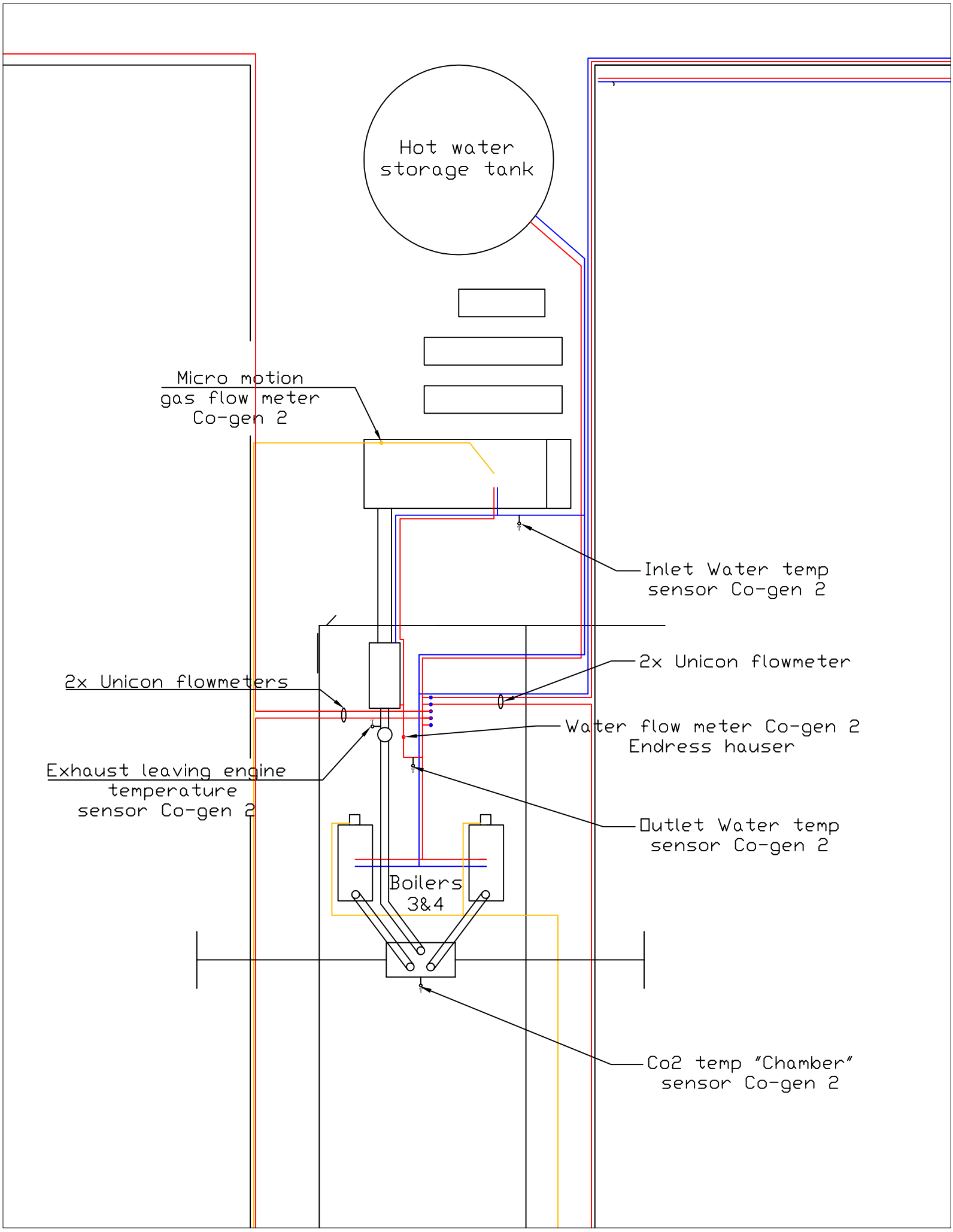
Hot water storage tank
Micro motion gas flow meter Co-gen 2
Inlet Water temp sensor Co-gen 2
2x Unicon flowmeter
2x Unicon flowmeters
Water flow meter Co-gen 2 Endress hauser
Exhaust leaving engine temperature sensor Co-gen 2
Outlet Water temp sensor Co-gen 2
Boilers 3&4
Co2 temp "Chamber" sensor Co-gen 2

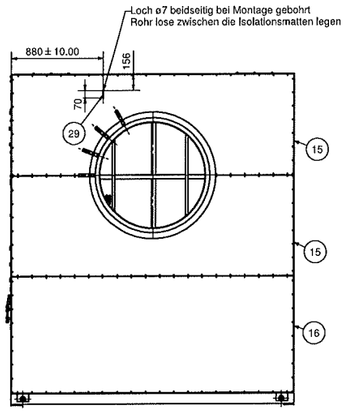

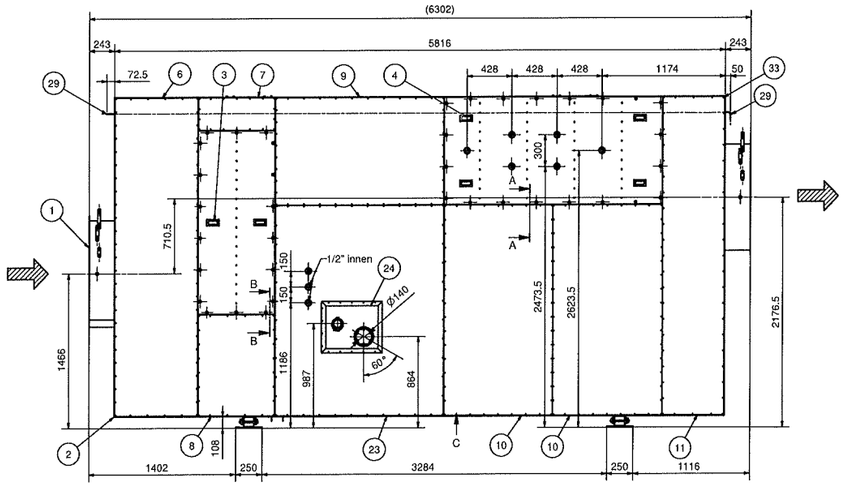

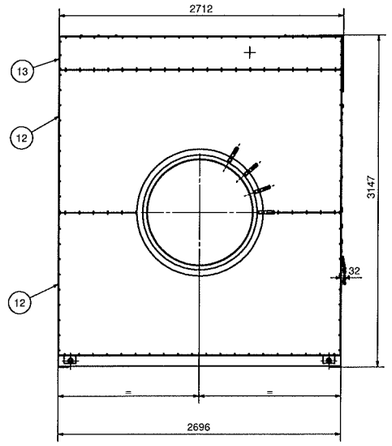

A-A (1:2)

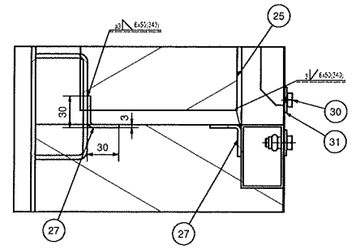

B-B (1:2)

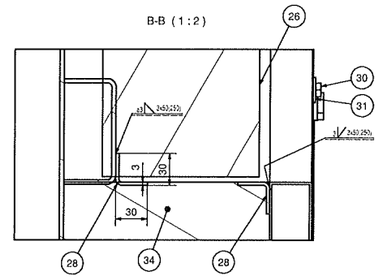

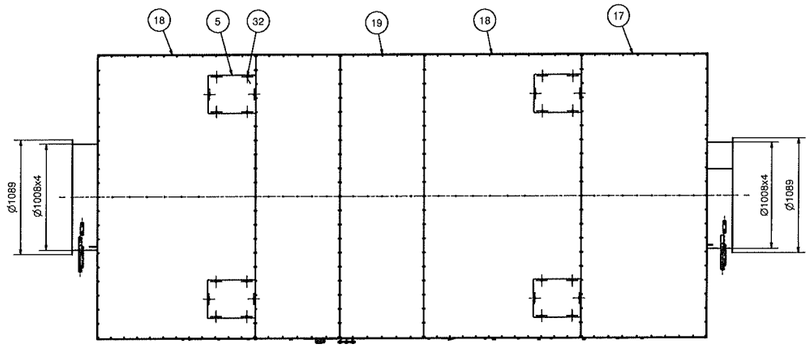

Ansicht C

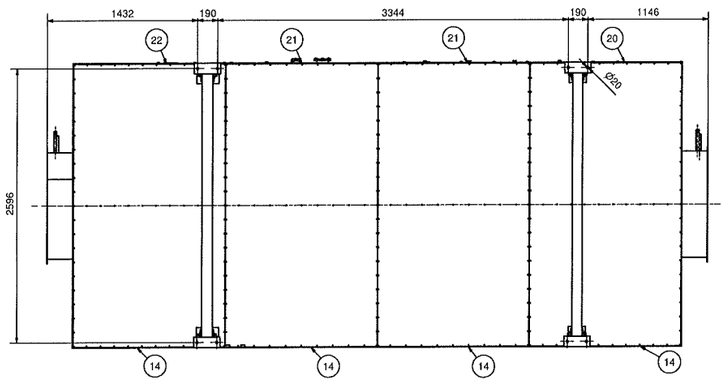

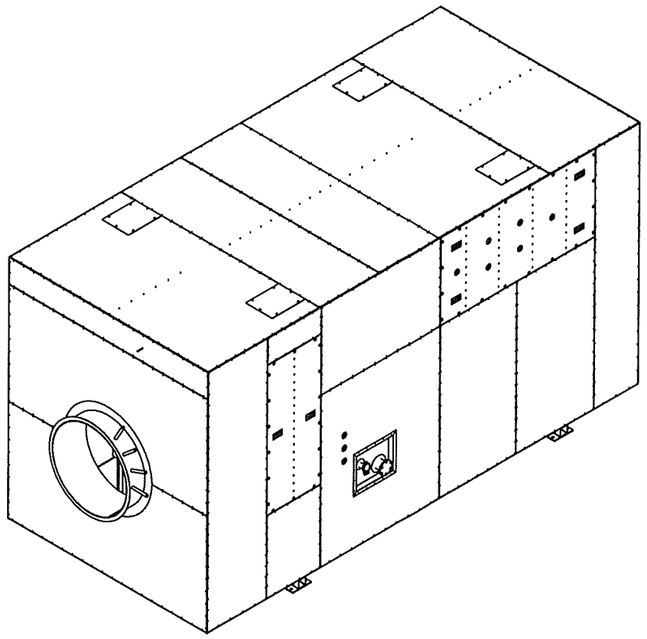

Schweissallgemeintoleranzen EN ISO 13920-BF
Schweissqualität EN ISO 5817-C

Alle Kanten gebrochen

Pos	Anz	Zeichnung Nr	Bauteil Art-Nr	Benennung	Bemerkungen	Mat	Gew
34	1		K-68928	Isolation		Isolation	1228.722 kg
33			E303182_0001	Unterflanschrauber 4.8x13 DIN 7504N	SCHAUFF - Bedarf	Stw	0.027 kg
32	24		K-42878	Blindbohrniete 4.8x13 DIN 7504 K		Stw	0.039 kg
31	38		2760.0563	Scheibe M8 DIN 9021 Stw		stw	0.036 kg
30	38		2760.0256	Blindbohrnut M8x20 DIN 929 8.8 vz		Fill	0.044 kg
29	1		3003.0204_0000-	Rohr DN 140		1.4301	0.741 kg
28	2		K-68022	Winkel 30/30/3-DN		1.0038 (DD11)	0.849 kg
27	2		K-42196	Winkel 30/30/3-300		1.0038 (DD11)	0.594 kg
26	1	K42731	K-42731_ct	Deckelblech verzinkt		Isolation	12.872 kg
25	1	K44135	K-44135_ct	Deckelblech verzinkt	D4014.1031		44.184 kg
24	1	K68159	K-68159_ct	Stahlblech verzinkt		1.0226 (DX51D+Z)	2.861 kg
23	1	K68158	K-68158_ct	Stahlblech verzinkt		1.0226 (DX51D+Z)	23.753 kg
22	1	K42896	K-42896_ct	Stahlblech verzinkt		1.0226 (DX51D+Z)	30.459 kg
21	2	K42894	K-42894_ct	Stahlblech verzinkt		1.0226 (DX51D+Z)	31.351 kg
20	1	K42893	K-42893_ct	Stahlblech verzinkt		1.0226 (DX51D+Z)	20.652 kg
19	2	K42892	K-42892_ct	Stahlblech verzinkt		1.0226 (DX51D+Z)	17.169 kg
18	2	K42891	K-42891_ct	Stahlblech verzinkt		1.0226 (DX51D+Z)	30.273 kg
17	1	K42890	K-42890_ct	Stahlblech verzinkt		1.0226 (DX51D+Z)	25.649 kg
16	1	K42889	K-42889_ct	Stahlblech verzinkt		1.0226 (DX51D+Z)	23.707 kg
15	2	K42888	K-42888_ct	Stahlblech verzinkt		1.0226 (DX51D+Z)	5.974 kg
14	4	K42887	K-42887_ct	Stahlblech verzinkt		1.0226 (DX51D+Z)	34.950 kg
13	1	K42886	K-42886_ct	Stahlblech verzinkt		1.0226 (DX51D+Z)	6.643 kg
12	2	K42885	K-42885_ct	Stahlblech verzinkt		1.0226 (DX51D+Z)	24.425 kg
11	1	K42884	K-42884_ct	Stahlblech verzinkt		1.0226 (DX51D+Z)	14.358 kg
10	2	K42883	K-42883_ct	Stahlblech verzinkt		1.0226 (DX51D+Z)	16.530 kg
9	1	K42882	K-42882_ct	Stahlblech verzinkt		1.0226 (DX51D+Z)	13.374 kg
8	1	K42878	K-42878_ct	Stahlblech verzinkt		1.0226 (DX51D+Z)	5.064 kg
7	1	K42879	K-42879_ct	Stahlblech verzinkt		1.0226 (DX51D+Z)	1.264 kg
6	1	K42877	K-42877_ct	Stahlblech verzinkt		1.0226 (DX51D+Z)	19.365 kg
5	4	K41182	K-41182_ct	Stahlblech verzinkt		1.0226 (DX51D+Z)	2.587 kg
4	1	K42952	K-42952_alm	Isolationsdeckel mit Griff			22.372 kg
3	1	K42374	K-42374_alm	Isolationsdeckel Stahl mit Griff			11.569 kg
2	1	K68928	K-68928_alm	Gehäuseunterteil			318.335 kg
1	1	K68931	K-68931_alm	IMCC126.135.100.100.R.01.03.00.000			3537.259 kg

Stückliste

Das Urheberrecht an dieser Zeichnung, die dem Empfänger persönlich anvertraut wird, verbleibt bei HUG ENGINEERING AG. Grenzenlose sachliche Benutzung, Zeichnung Zeichnung oder Teile davon weder noch vervielfältigt noch elektronisch gespeichert noch Drittpersonen mitgeteilt oder zugänglich gemacht werden.

	Datum	Name
Bearb.	09.07.2010	sm
Gepr.	06.07.2010	
Status	In Arbeit	
Art.	09.03.2010 9:30:46	

Werkstoff 1.20 — Gewicht: 5919.696 kg

Werkstoff

IMCC126.135.100.100.R.01.01.00.000

Isoliert

hug engineering.

K-68100

Blatt 1 von 1 — A3

Rev. | Datum | Name | Modell | K-68100_alm | Ersatz für: | Ersetzt durch

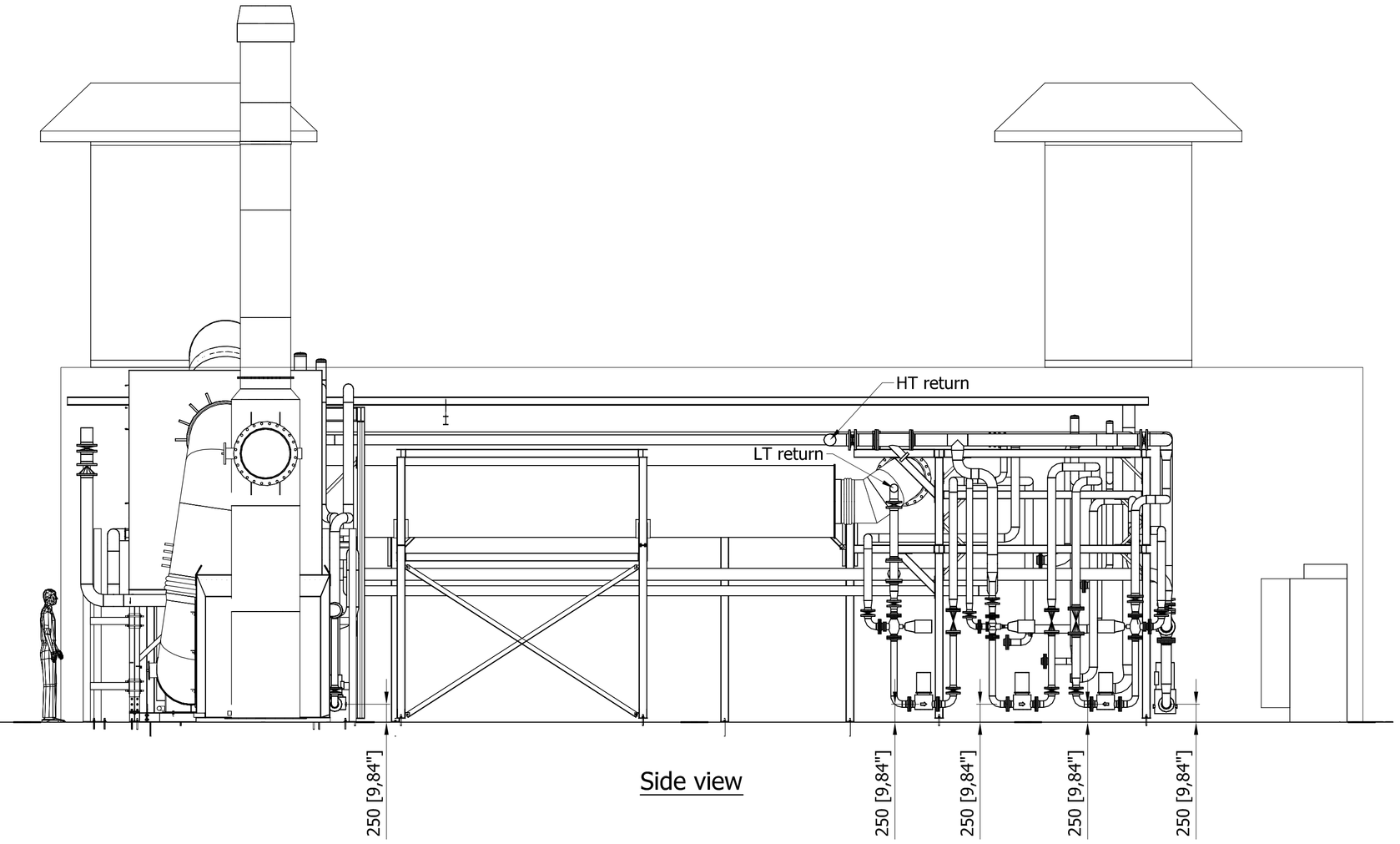

Side view

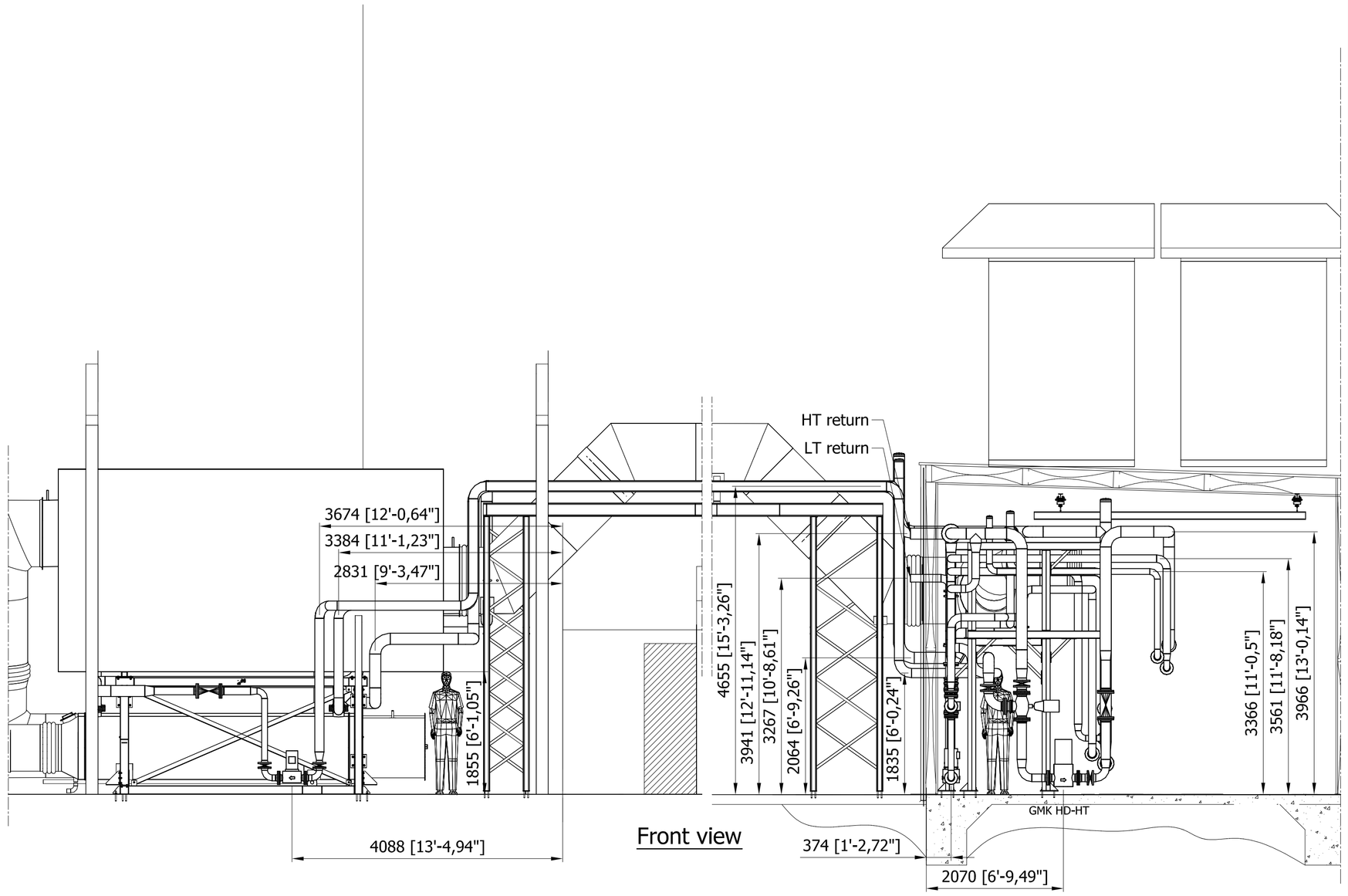

Front view

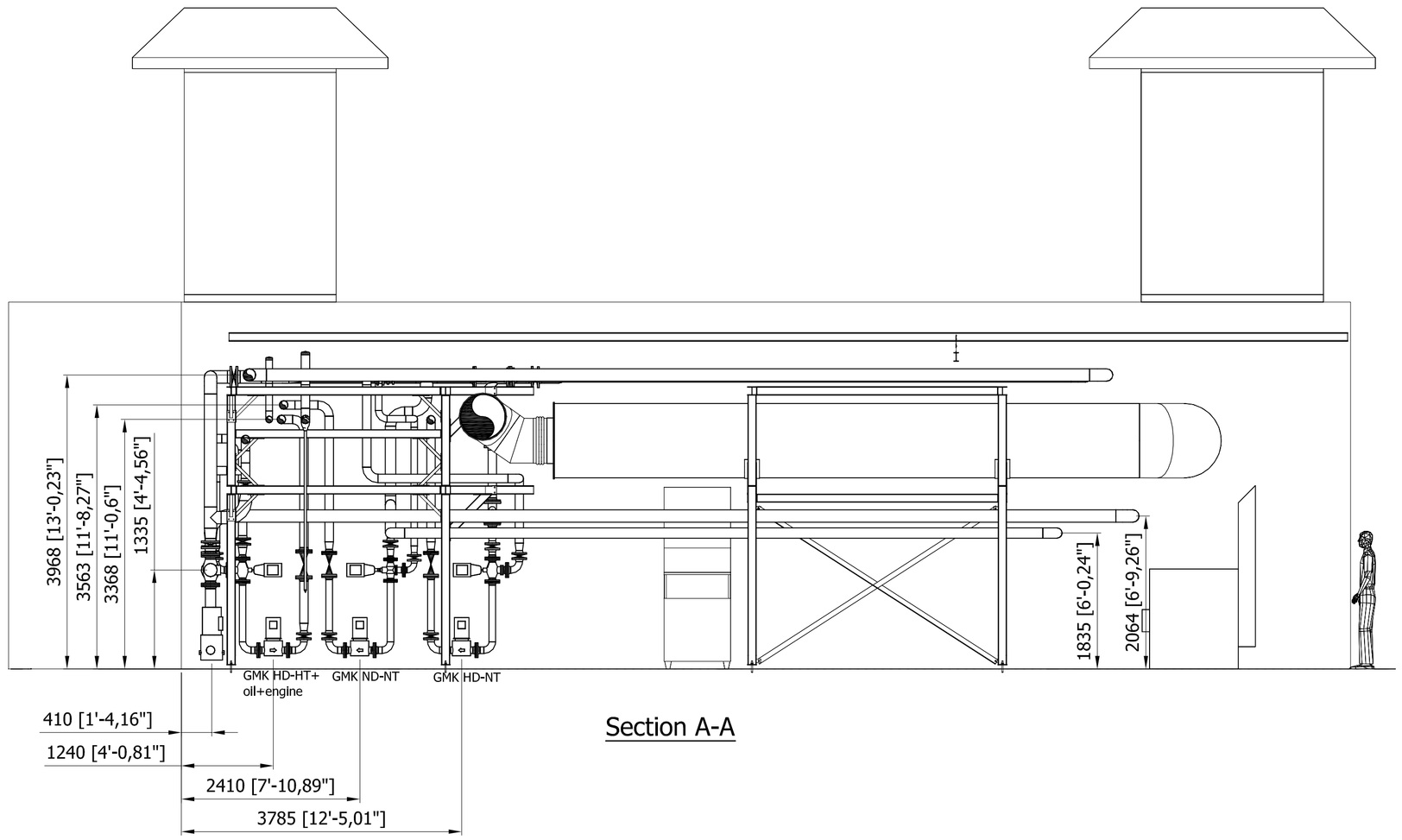

Section A-A

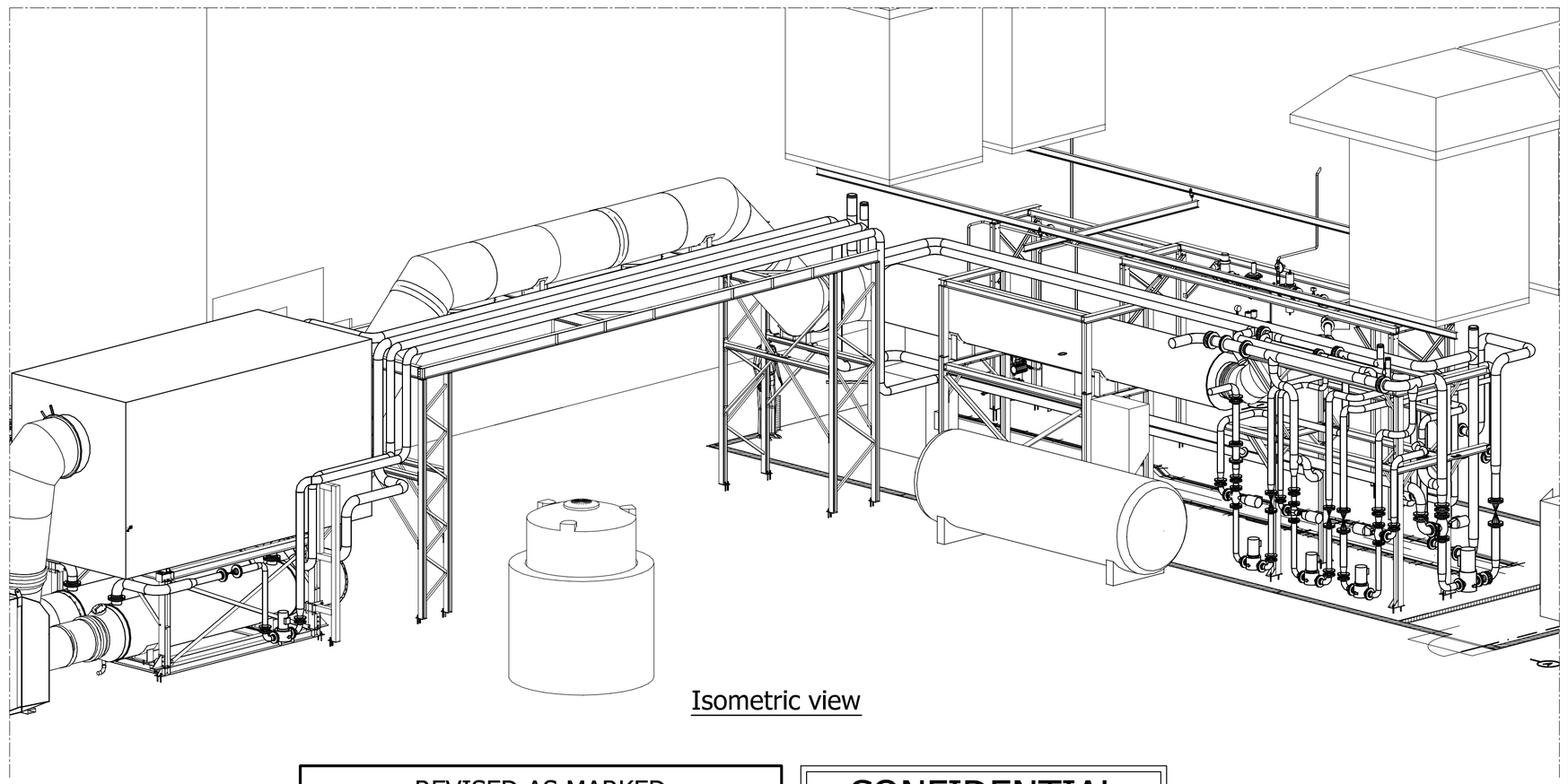

Isometric view

REVISED AS MARKED		
Approved by:	Date:	Initial:

REV.	DRW.	DATE	DESCRIPTION	CHKD.
D	EjR	250613	Piping changed	JV
C	EjR	180613	Piplng changed	JV
B	JV	140313	Piplng lay-out completely changed	RH
A	JV	290113	Revised as marked	RH
0	JV	211212	First Issue	RH

CONFIDENTIAL

PROJECTNUMBER: 4075	PROJECT: Houweling Location 2	REF. NR.: J K214	REF. NR. CLIENT
CLIENT:		DRAWN: J Vllelander	DATE: 21-12-2012
TITLE: JMS 624 4,4 MW Piping Lay-out		CHECKED: R Heller	DATE: 21-12-2012
		SCALE: 1:50	FORMAT: A_1
Jenbacher gas engines		DRAWING NUMBER: 10-0564E-07	REVISE: D

Jenbacher BV * Kelvinring 58 * 2952 BG Alblasserdam
The Netherlands * Tel: +31/88/0019700 * Fax: +31/88/0019701
Website: www.geyenbacher.com * e-mail: jenbacher.netherlands@ge.com

ALL RIGHTS STRICTLY PRESERVED REPRODUCTION OR ISSUE TO THIRD PARTIES IS NOT PERMITTED WITHOUT WRITTEN AUTHORITY OF GE JENBACHER BV

PROJECTION:

HUG ENGINEERING
Im Geren 14
8352 Elsau
Schweiz

Tel.: +41 (0)52 368 20 20
Fax: +41 (0)52 368 20 10

hugengineering.

Electrical Diagram

Equipment : SER COdiNOx3 (UL Vers.)

El. Diagram Number : SER_111u1_A-8835_b

Responsible : MAL

Last Modification : 23.01.13

Last Modified by : DOF

Last Page : 84

Number of Pages : 23

Power Supply : 230V / 10A

Power Supply Line : L + N + PE / 1.5mm2

Control Voltage : 24VDC

Location :

Installation :

Page	Page Title	Date	Drawn
1	Cover Sheet	04.05.06	MIG
2	Page Index	23.01.13	MAL
3	Information	04.05.06	MIG
4	Terminalblocks	13.03.12	MAL
10	Main Power Supply Compressor, Air Conditioner	28.02.07	MIG
11	230V Drives	16.07.09	MIG
20	24VDC Power Supply	15.03.12	MAL
21	Peltier Cooler	28.01.09	MIG
30	PLC Power Supply	13.03.12	MIG
36	Feed Forward	13.03.12	BEN
40	Module 1 Dig. Inputs 0.0..0.7	13.03.12	MIG
41	Module 1 Dig. Inputs 1.0..1.7	13.03.12	MIG
50	Module 2 Dig. Outputs 0.0..0.7	13.03.12	MIG
51	Module 2 Dig. Outputs 1.0..1.7	13.03.12	MIG
52	Module 3 Dig. Outputs 2.0..2.7	13.03.12	MIG
60	Module 0 (extension) Analogue Inputs	17.01.13	MAL
61	Module 1 (extension) Analogue Inputs	17.01.13	MAL
62	Module 3 (extension) Analogue Outputs	23.01.13	DOFR
80	230VAC Connections Cable Plan	27.03.07	BEN
81	24V Connections Cable Plan	27.03.07	BEN
82	24V Connections Cable Plan	13.05.09	BEN
83	Analogue Signals Cable Plan	13.03.12	MAL
84	Feed Forward Cable Plan	14.05.09	BEN

Wire Colour Definition

green-yellow	protective earth / ground
black	load circuit
red	control voltage AC
light blue	neutral AC
violet	control voltage 24VDC
dark blue	control voltage 0VDC
white	analogue signal
orange	external voltage

Options

Drahtfarben

grün-gelb	Schutzleiter / Erde
schwarz	Laststromkreise
rot	Steuerspannung AC
hellblau	Neutralleiter
violett	Steuerspannung 24VDC
dunkelblau	Steuerspannung 0VDC
weiss	Analogsignal
orange	Fremdspannung

Optionen

Terminalblocks

X10	Feed in
X11	230V local
X12	230V remote
X13	230V swivel plate bottom
X14	230V swivel plate top
X20	0V distribution
X21	24V distribution
X22	24V digital input signals
X23	24V digital output signals
X24	24V dig. outputs swivel plate
X25	24V distribution swivel plate
X26	peltier cooler with fan
X30	analogue input signals
X31	analogue output signals
X40	potential free contacts
X50	feed forward

Klemmenleisten

X10	Einspeisung
X11	230V lokal
X12	230V entfernt
X13	230V Schwenkplatte unten
X14	230V Schwenkplatte oben
X20	0V-Verteilung
X21	24V-Verteilung
X22	24V Digitaleingänge
X23	24V Digitalausgänge
X24	24V Digitalausgänge Schwenkplatte
X25	24V-Verteilung Schwenkplatte
X26	Peltier-Kühler mit Ventilator
X30	Analogeingänge
X31	Analogausgänge
X40	potentialfreie Kontakte
X50	Störgrössenaufschaltung

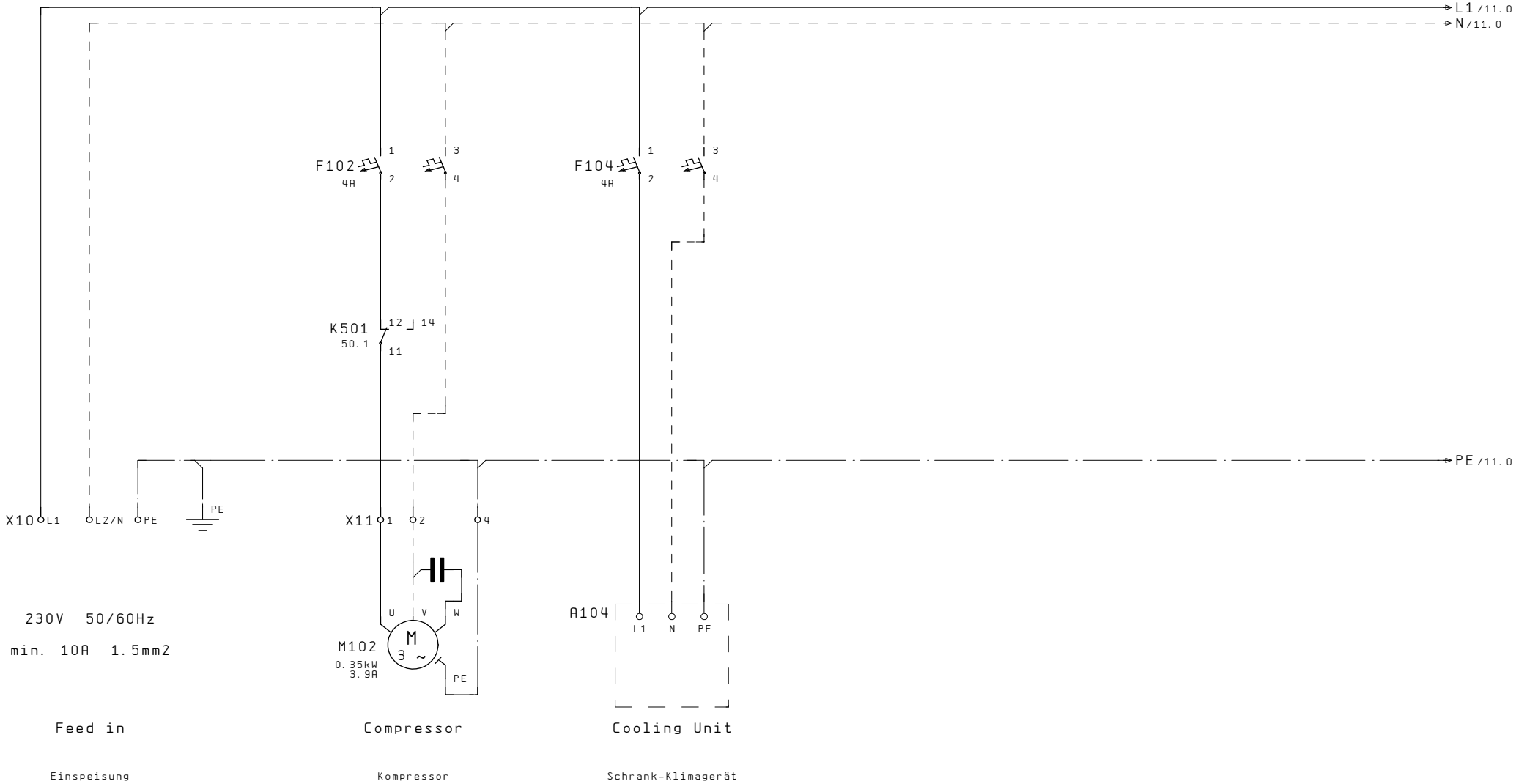

4

11

			Urspr.	04.05.06	SER COdiNOx3 (UL Vers.)		Main Power Supply Compressor, Air Conditioner	SER_111u1_A-8835_b
			Bearb.	28.02.07				
			Name	MIG				
Änderung	Datum	Name	Norm		Urspr.	Ers. f.	Ers. d.	

=
+
Bl. 10
84 Bl.

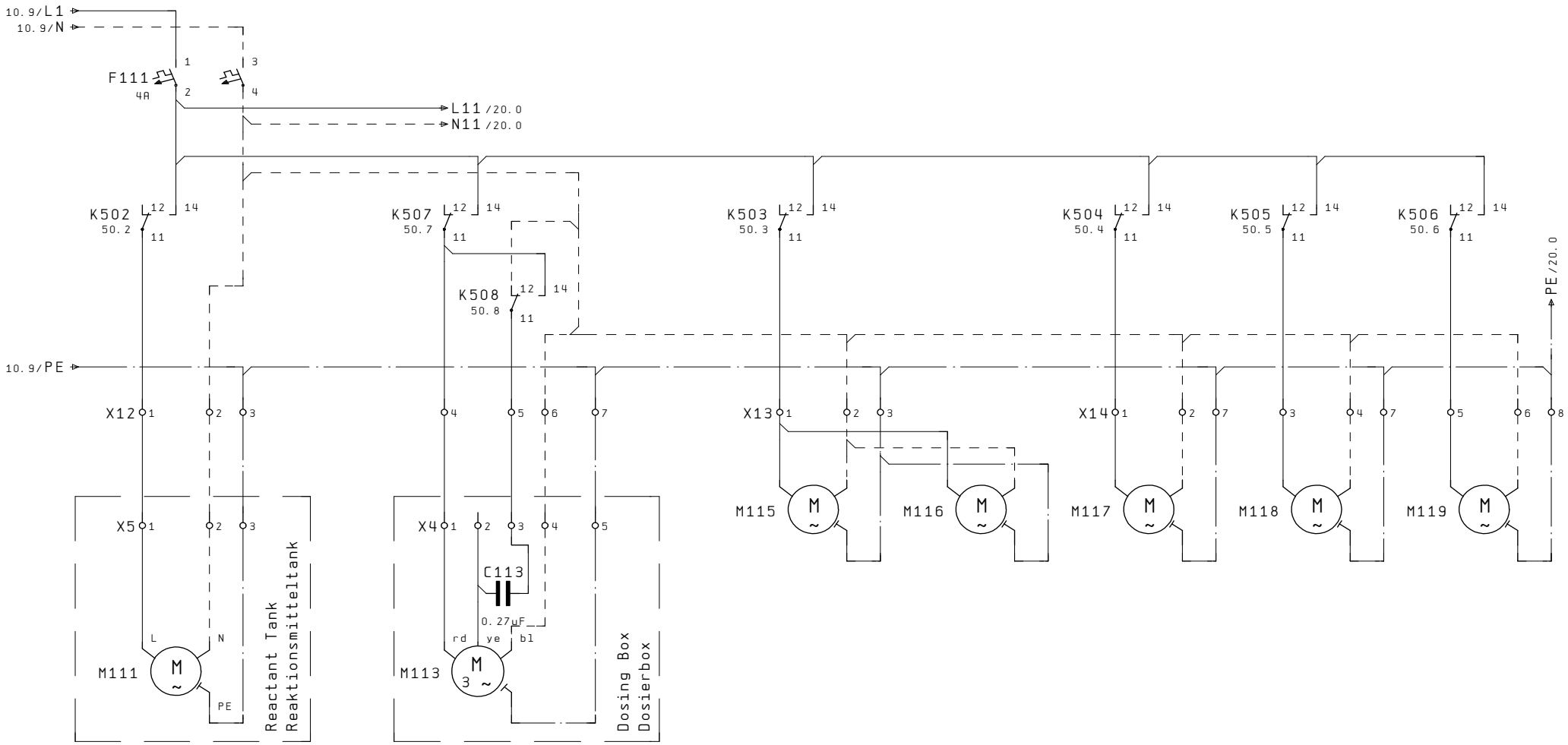

Booster Pump	Injector Drive	Condensate Pump 1	Condensate Pump 2	Sampling Gas Pump Control	Sampling Gas Pump Emission	Purge Gas Pump
Vorlaufpumpe	Düsenantrieb	Kondensatpumpe 1	Kondensatpumpe 2	Messgaspumpe Regelung	Messgaspumpe Emissionsmessung	Spülgaspumpe

10 20

			Urspr.	04.05.06	SER COdiNOx3 (UL Vers.)		230V Drives
			Bearb.	16.07.09			
			Name	MIG			
Änderung	Datum	Name	Norm		Urspr.	Ers.f.	Ers.d.

SER_111u1_A-8835_b

=
+

Bl. 11
84 Bl.

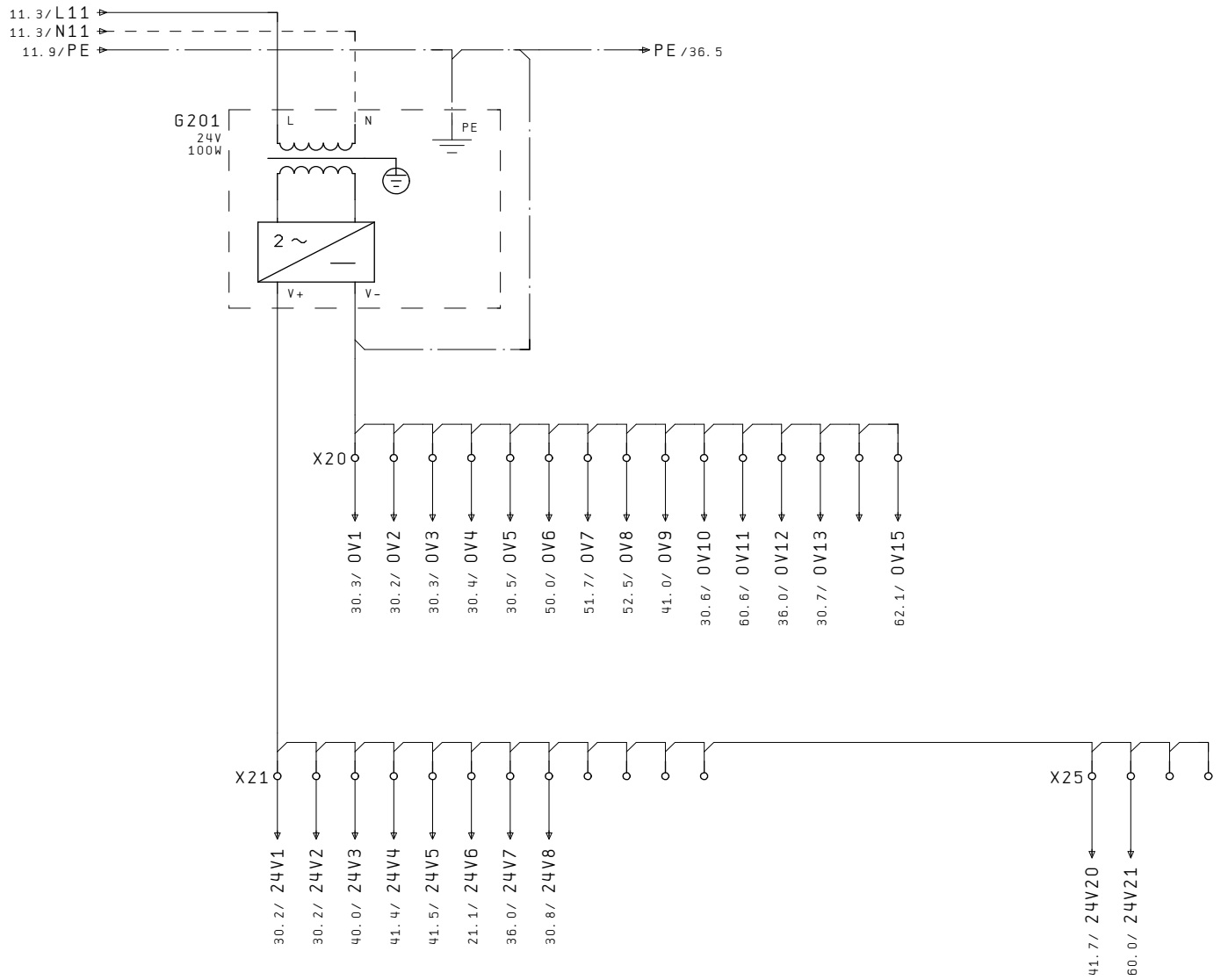

24VDC Power Supply

24VDC Speisung

11 21

			Urspr.	04.05.06	SER COdiNOx3 (UL Vers.)			24VDC Power Supply	SER_111u1_A-8835_b	=
			Bearb.	15.03.12						+
			Name	MAL						Bl. 20
Änderung	Datum	Name	Norm		Urspr.	Ers. f.	Ers. d.			84 Bl.

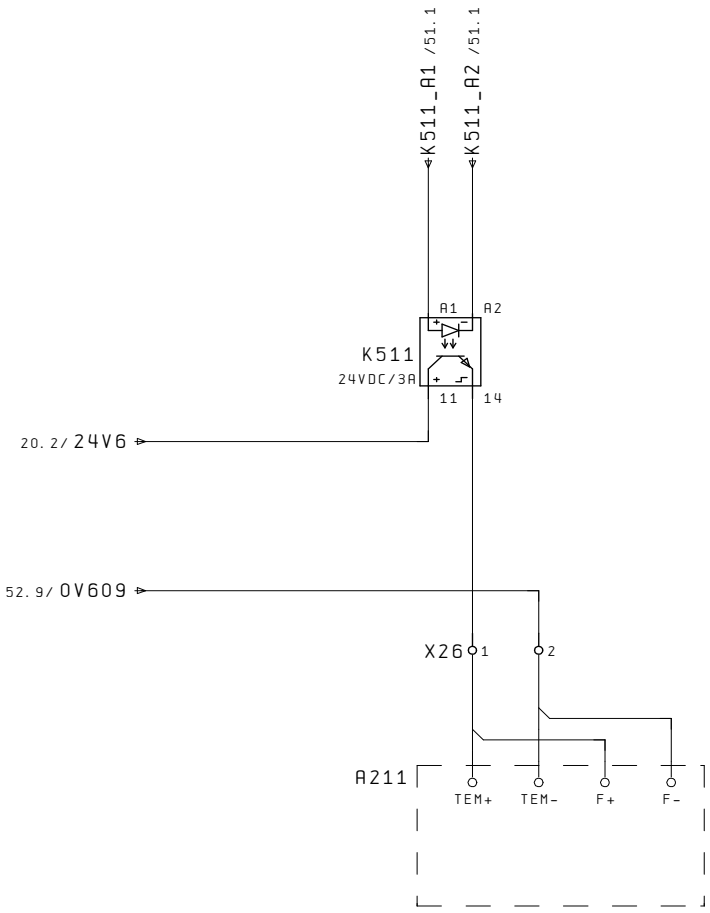

Peltier Cooler
with Fan

Peltier-Kühler
mit Ventilator

20

30

			Urspr.	04.05.06	SER COdiNOx3 (UL Vers.)			Peltier Cooler	SER_111u1_A-8835_b	=
			Bearb.	28.01.09						+
			Name	MIG						Bl. 21
Änderung	Datum	Name	Norm		Urspr.	Ers. f.	Ers. d.			84 Bl.

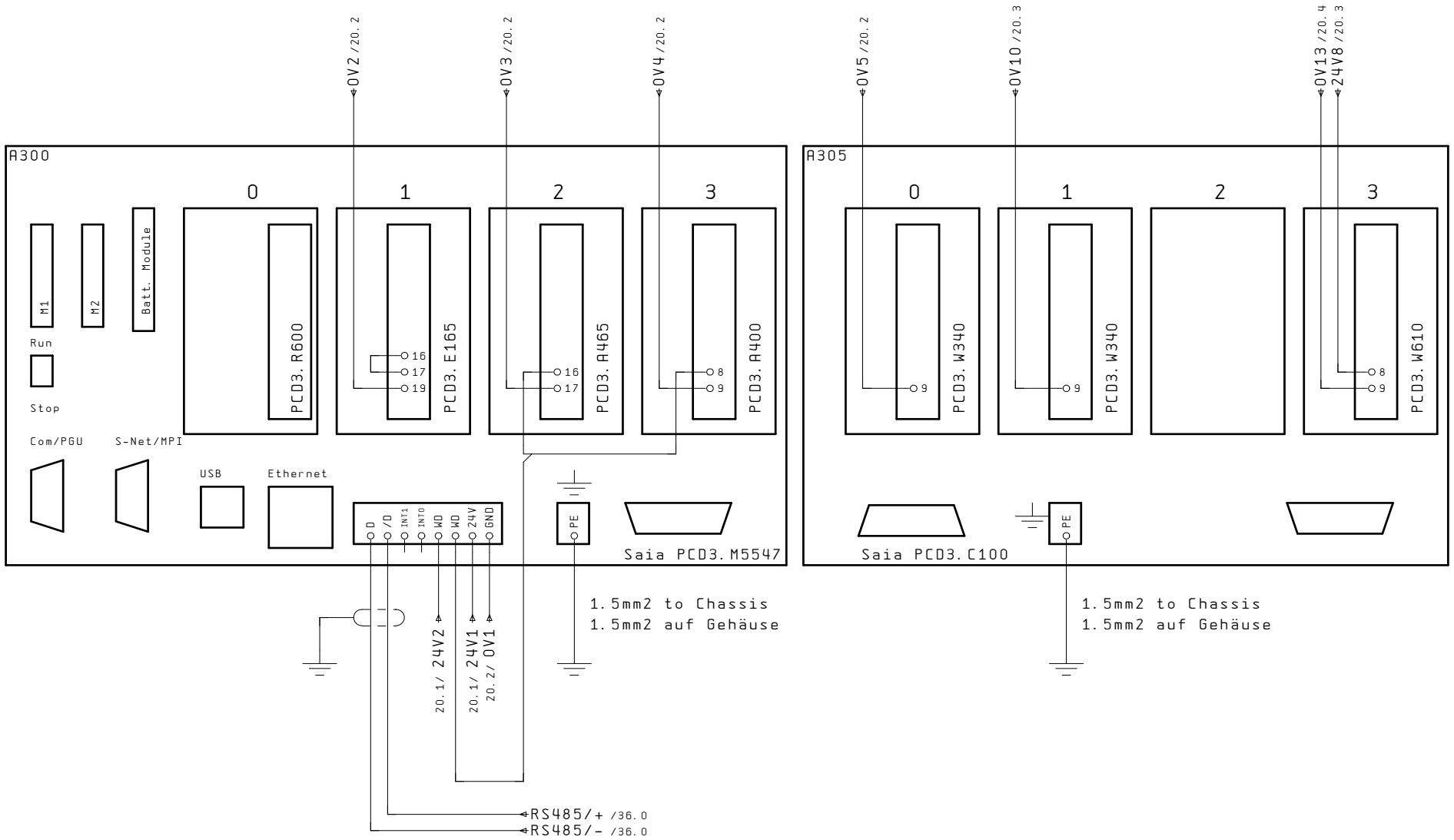

			Urspr.	04.05.06	SER COdiNOx3 (UL Vers.)			PLC Power Supply	SER_111u1_A-8835_b	=	
			Bearb.	13.03.12						+	
			Name	MIG							Bl. 30
Änderung	Datum	Name	Norm		Urspr.	Ers.f.	Ers.d.				84 Bl.

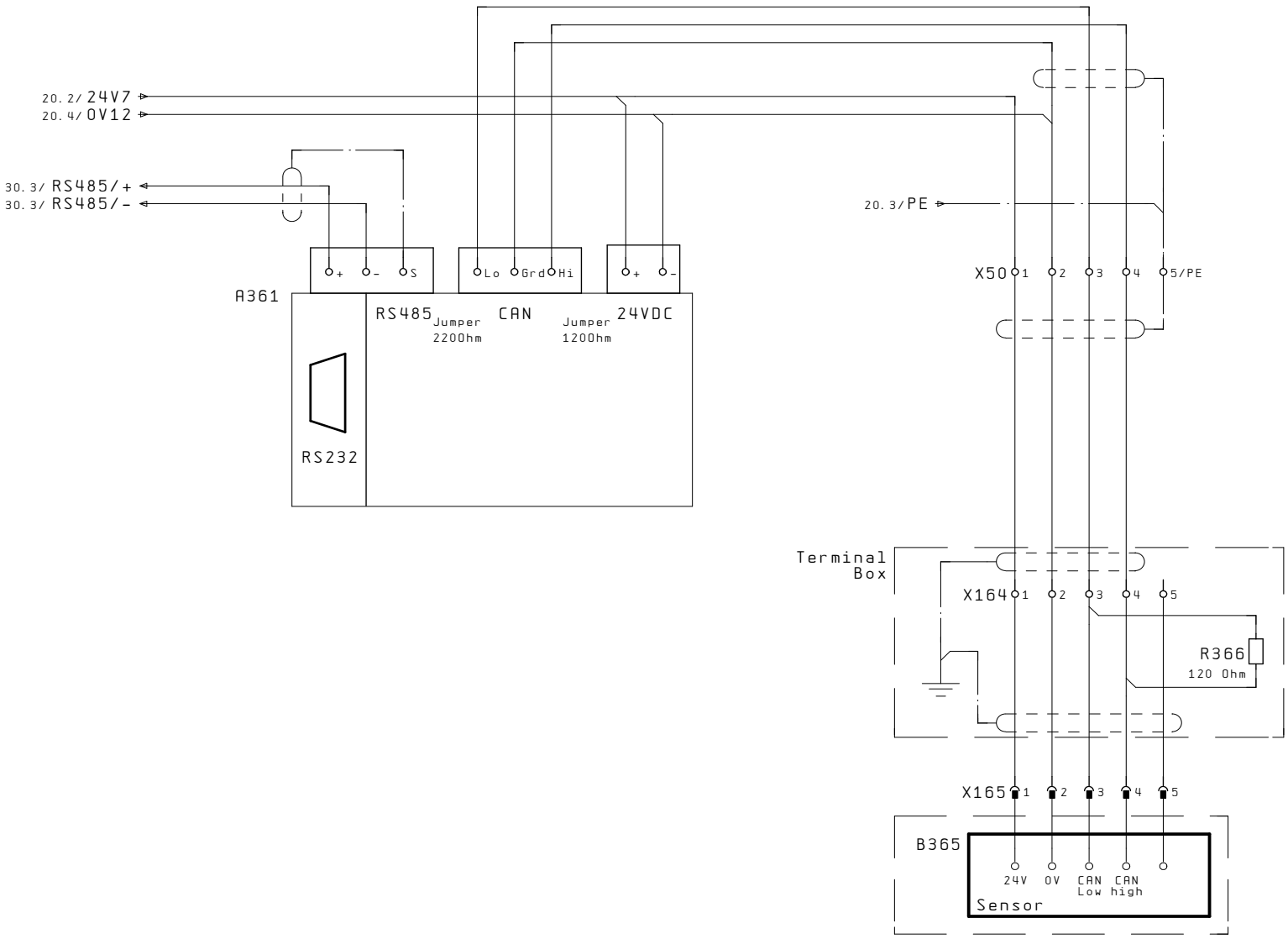

Gateway for feed forward

Raw gas NOx sensor

Schnittstelle für
Störgrössenaufschaltung

Rohgas NOx - Sensor

30

40

			Urspr.	04.05.06	SER COdiNOx3 (UL Vers.)			Feed Forward	SER_111u1_A-8835_b	=
			Bearb.	13.03.12						+
			Name	BEN						Bl. 36
Änderung	Datum	Name	Norm		Urspr.	Ers. f.	Ers. d.			84 Bl.

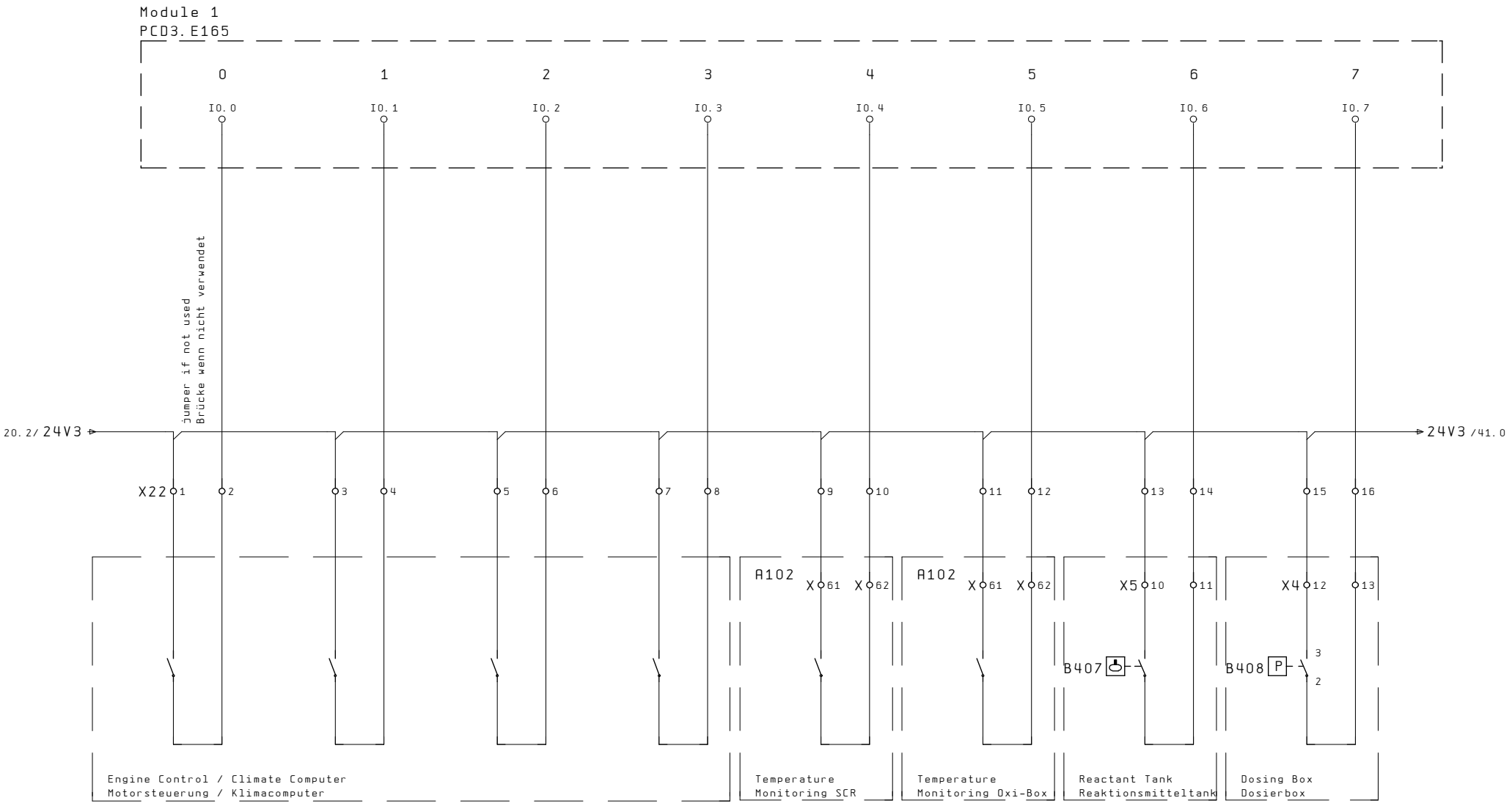

36

41

			Urspr.	04.05.06	SER COdiNOx3 (UL Vers.)			Module 1 Dig. Inputs 0.0..0.7	SER_111u1_A-8835_b
			Bearb.	13.03.12					
			Name	MIG					
Änderung	Datum	Name	Norm		Urspr.	Ers. f.	Ers. d.		

=
+
Bl. 40
84 Bl.

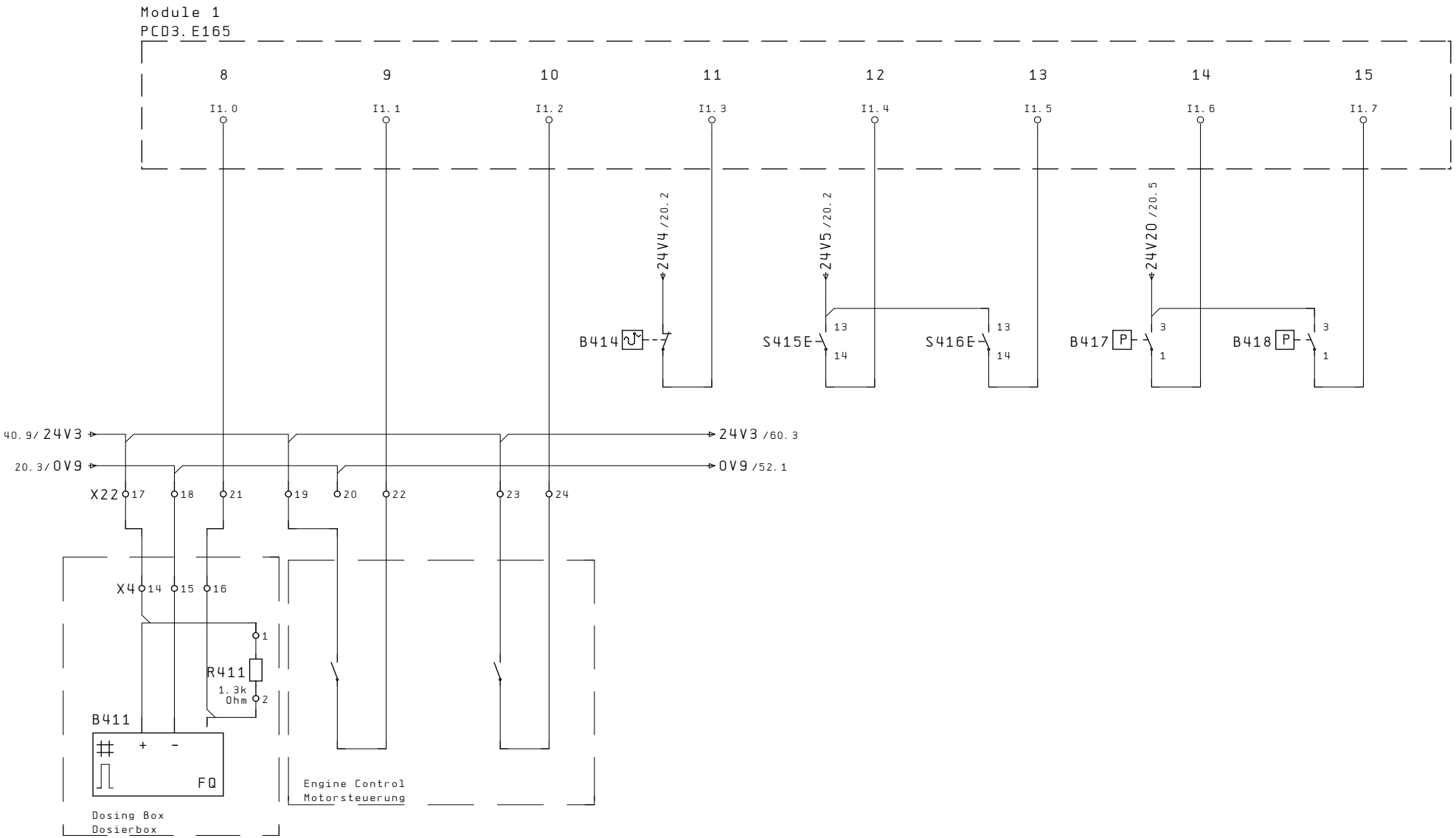

			Urspr.	04.05.06	SER COdiNOx3 (UL Vers.)		Module 1 Dig. Inputs 1.0..1.7	SER_111u1_A-8835_b	=
			Bearb.	13.03.12					+
			Name	MIG					Bl. 41
Änderung	Datum	Name	Norm		Urspr.	Ers.f.	Ers.d.		84 Bl.

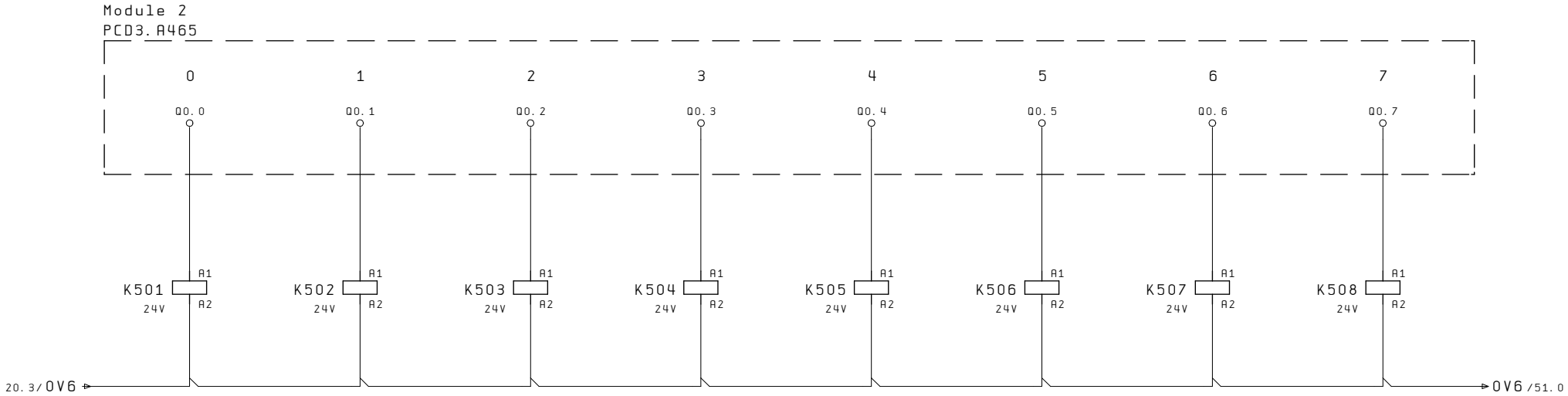

Compressor Off	Booster Pump	Condensate Pumps	Gas Pump Control Path	Gas Pump Emission Path	Purge Gas Pump	Injector Drive Turn	Injector Drive Turn to Inject
14 / 12 / 11 10.2	14 / 12 / 11 11.1	14 / 12 / 11 11.5	14 / 12 / 11 11.7	14 / 12 / 11 11.8	14 / 12 / 11 11.9	14 / 12 / 11 11.3	14 / 12 / 11 11.3
Verdichter aus	Vorlaufpumpe	Kondensatpumpen	Messgaspumpe Regelung	Messgaspumpe Emission	Spülgaspumpe	Drehantrieb Düse drehen	Drehantrieb Düse drehen nach Eindüsen

41

51

			Urspr.	04.05.06	SER COdiNOx3 (UL Vers.)		Module 2 Dig. Outputs 0.0..0.7	SER_111u1_A-8835_b
			Bearb.	13.03.12				
			Name	MIG				
Änderung	Datum	Name	Norm		Urspr.	Ers.f.	Ers.d.	

=
+
Bl. 50
84 Bl.

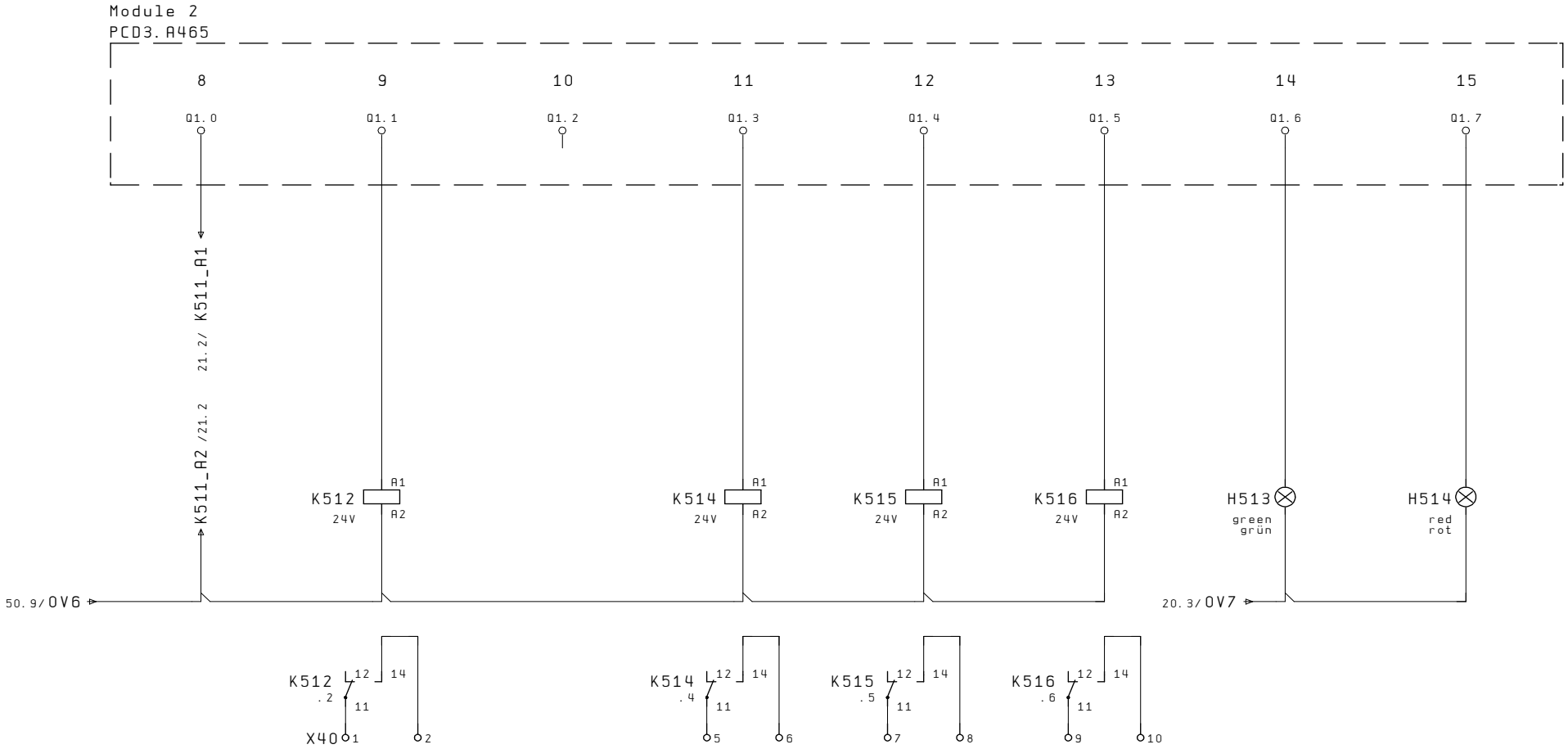

50

52

			Urspr.	04.05.06	SER COdiNOx3 (UL Vers.)			Module 2 Dig. Outputs 1.0..1.7	SER_111u1_A-8835_b
			Bearb.	13.03.12					
			Name	MIG					
Änderung	Datum	Name	Norm		Urspr.	Ers.f.	Ers.d.		

Bl. 51
84 Bl.

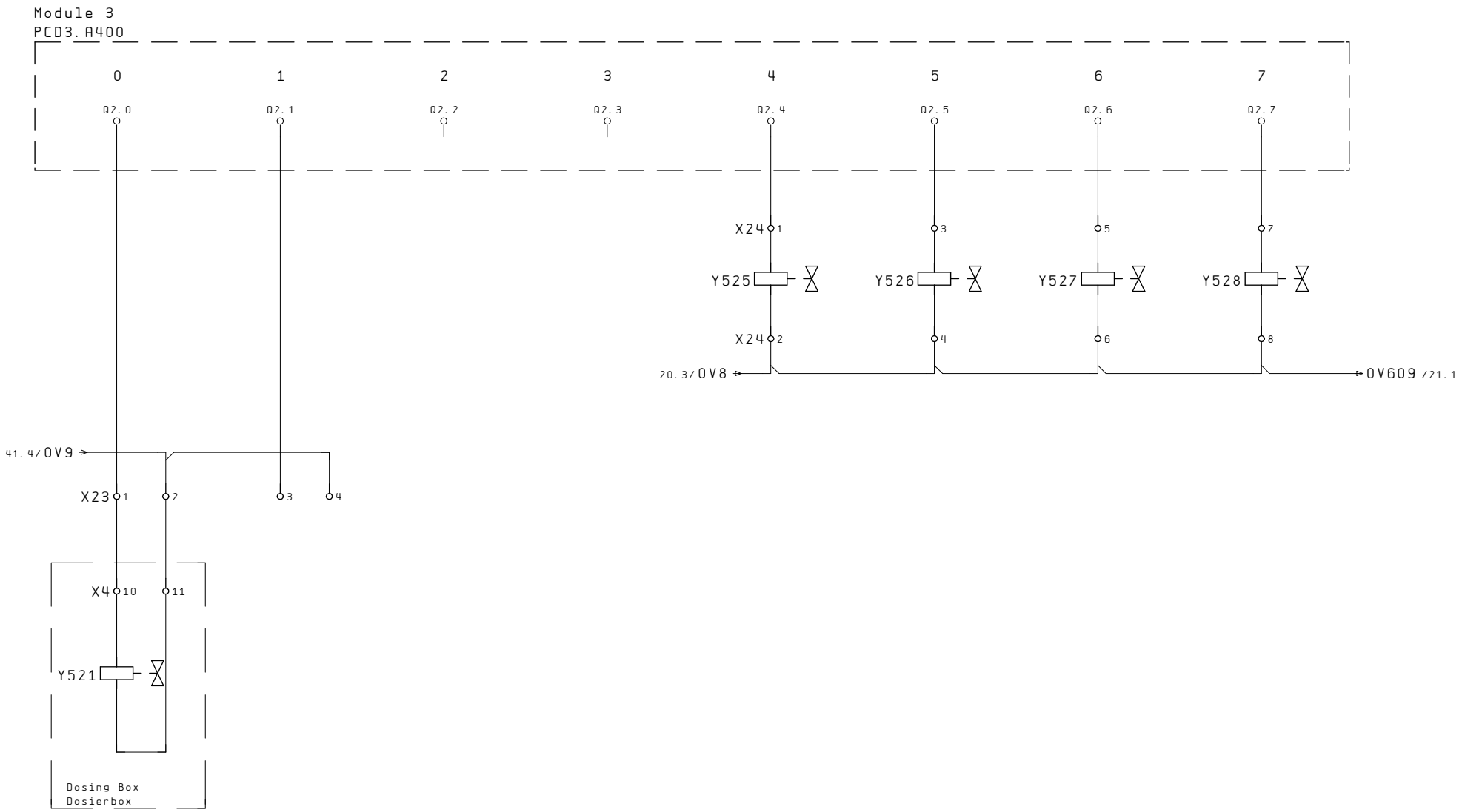

Dosing Valve	Spare	Spare	Spare	Valve Path 1	Valve Path 2	Valve Emission Measuring	Valve Emission Path
Dosierventil	Reserve	Reserve	Reserve	Ventil Pfad 1	Ventil Pfad 2	Ventil Emissions-messung	Ventil Emissionspfad

51 60

			Urspr.	04.05.06	SER COdiNOx3 (UL Vers.)	Module 3 Dig. Outputs 2.0..2.7	SER_111u1_A-8835_b
			Bearb.	13.03.12			
			Name	MIG			
Änderung	Datum	Name	Norm		Urspr. / Ers.f. / Ers.d.		Bl. 52 / 84 Bl.

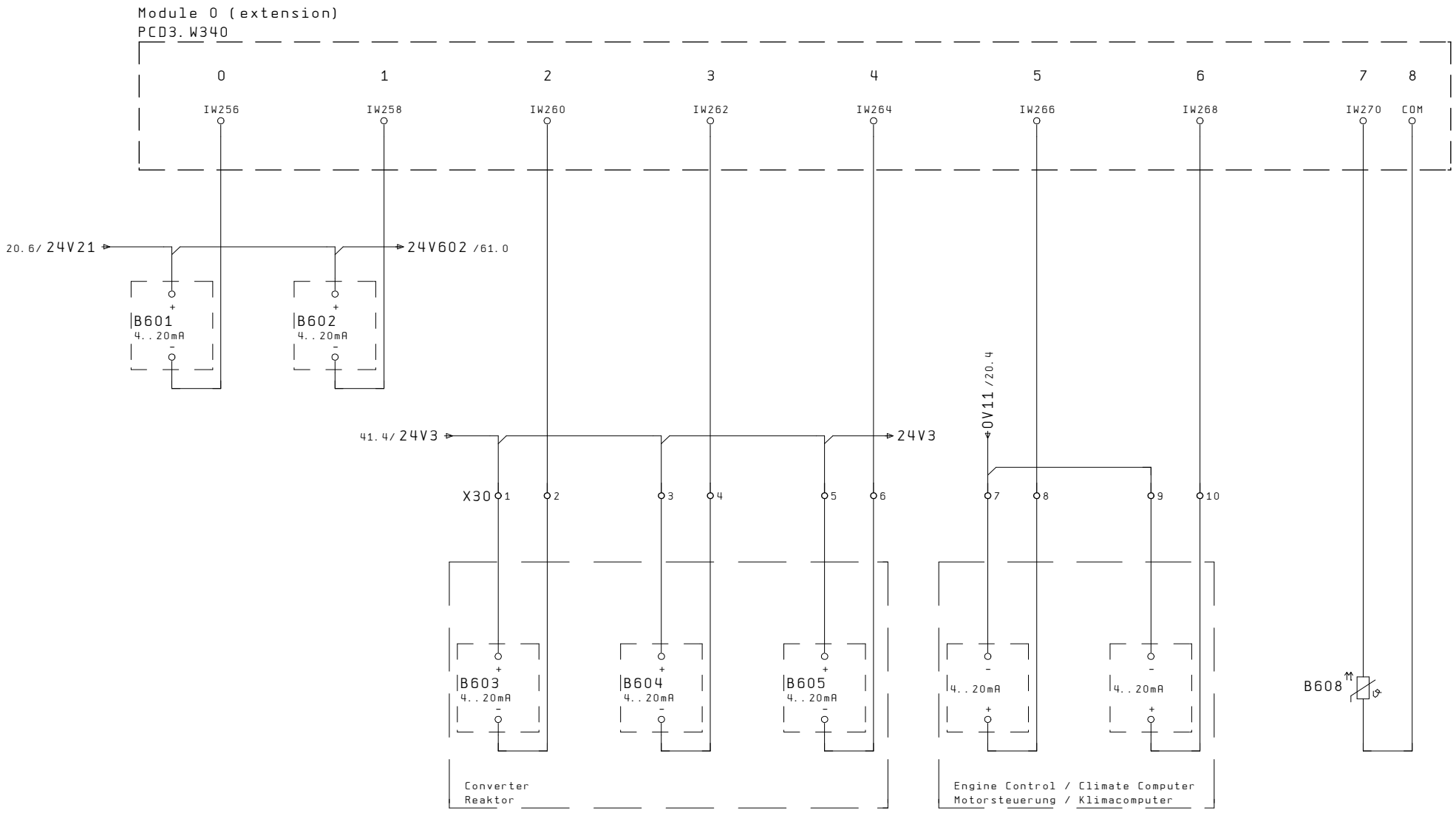

52

61

			Urspr.	04.05.06	SER COdiNOx3 (UL Vers.)		Module 0 (extension) Analogue Inputs	SER_111u1_A-8835_b	=
			Bearb.	17.01.13					+
			Name	MAL					Bl. 60
Änderung	Datum	Name	Norm		Urspr.	Ers. f.	Ers. d.		84 Bl.

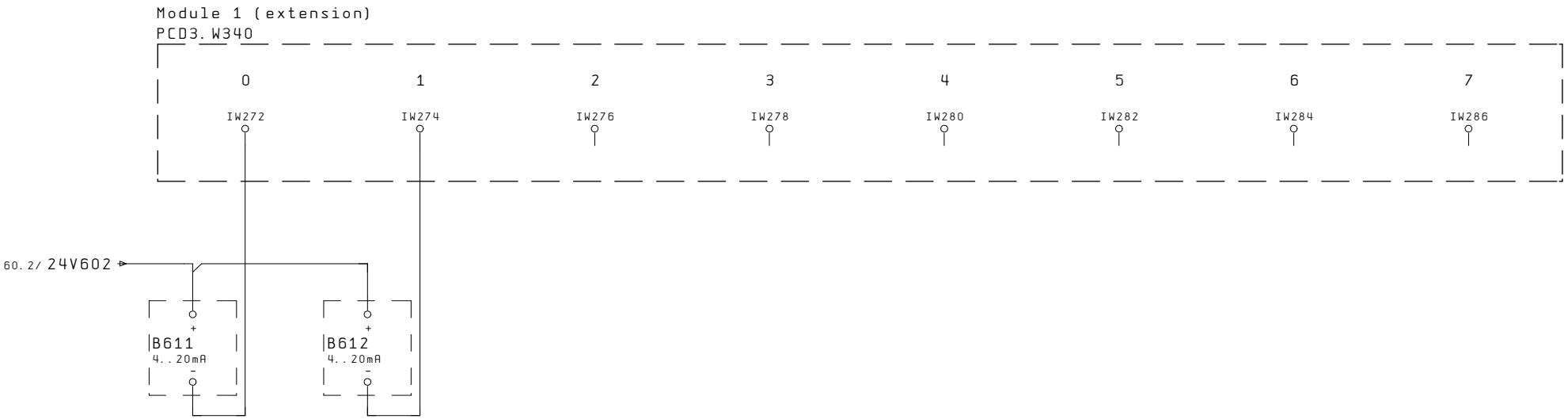

NO2 Cell 1	NO2 Cell 2	Spare	Spare	Spare	Spare	Spare	Spare
NO2-Zelle 1	NO2-Zelle 2	Reserve	Reserve	Reserve	Reserve	Reserve	Reserve

			Urspr.	04.05.06	SER COdiNOx3 (UL Vers.)		Module 1 (extension) Analogue Inputs	SER_111u1_A-8835_b
			Bearb.	17.01.13				
			Name	MAL				
Änderung	Datum	Name	Norm		Urspr.	Ers.f.	Ers.d.	

=
+
Bl. 61
84 Bl.

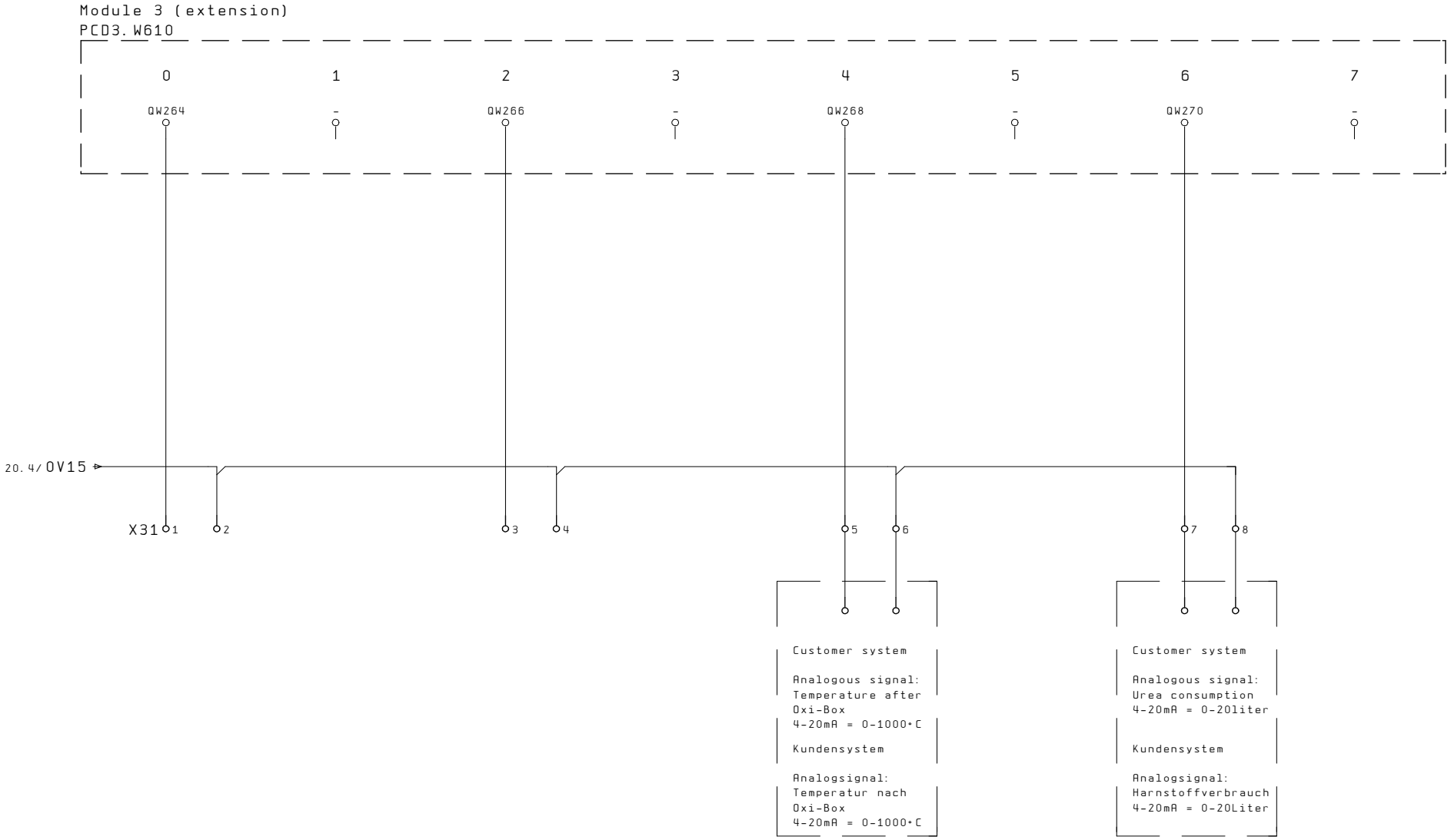

Analogue output Res1
4 - 20 mA

Analogausgang Res1
4 - 20 mA

Analogue output Res2
4 - 20 mA

Analogausgang Res2
4 - 20 mA

Analogue output
4 - 20 mA
Temperature after Oxi-Box

Analogausgang 1
4 - 20 mA
Temperatur nach Oxi-Box

Analogue output
4 - 20 mA
Urea consumption

Analogausgang 2
4 - 20 mA
Harnstoffverbrauch

			Urspr.	04.05.06	SER COdiNOx3 (UL Vers.)			Module 3 (extension) Analogue Outputs	SER_111u1_A-8835_b
			Bearb.	23.01.13					
			Name	DOFR					
Änderung	Datum	Name	Norm		Urspr.	Ers. f.	Ers. d.		

=
+
Bl. 62
84 Bl.

Terminals Control Cabinet / Klemmen Schaltschrank

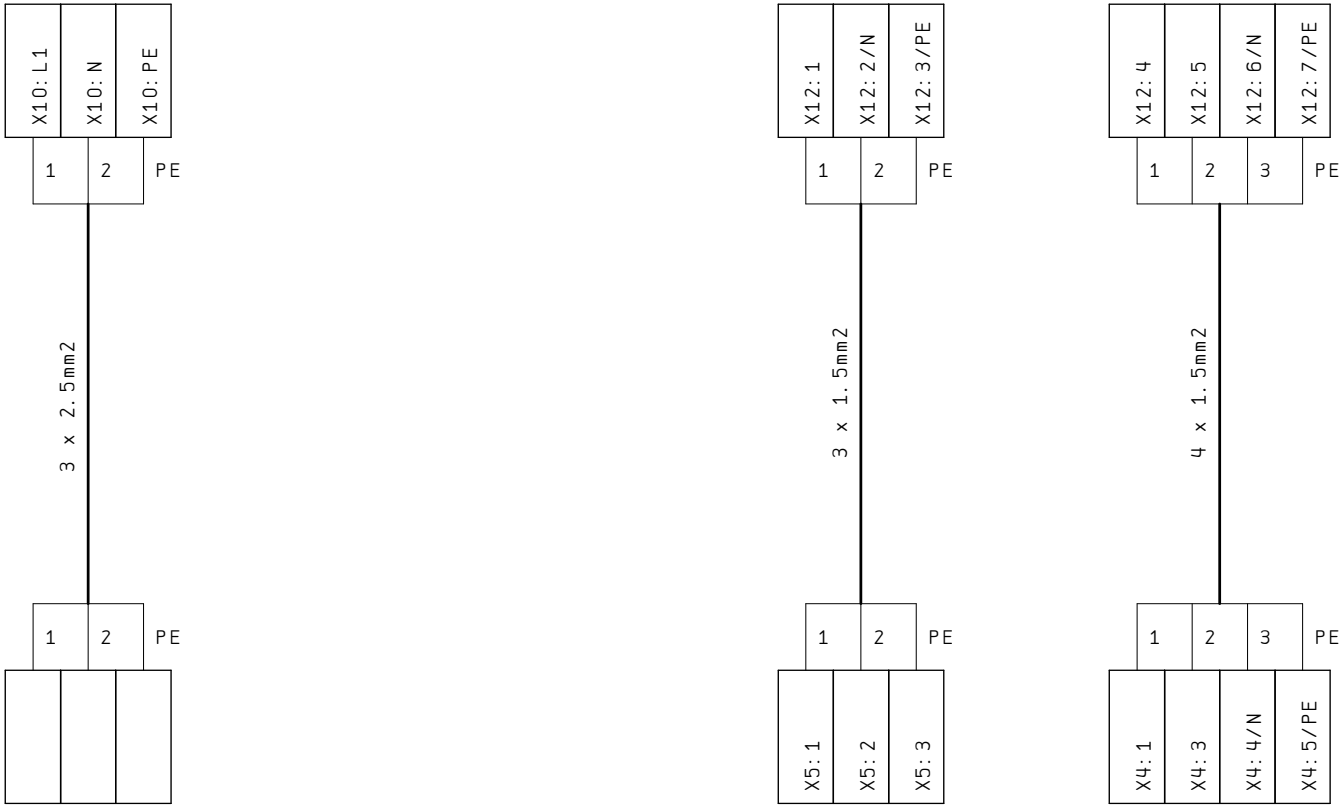

Fuse Panel
Customer

Sicherungs-
tableau Kunde

Reactant Tank
Booster Pump

Reaktionsmitteltank
Vorlaufpumpe

Dosing Box
Injector Drive

Dosierbox
Drehantrieb

			Urspr.	04.05.06	SER COdiNOx3 (UL Vers.)			230VAC Connections Cable Plan	SER_111u1_A-8835_b
			Bearb.	27.03.07					
			Name	BEN					
Änderung	Datum	Name	Norm		Urspr.	Ers. f.	Ers. d.		

=
+

Bl. 80
84 Bl.

Terminals Control Cabinet / Klemmen Schaltschrank

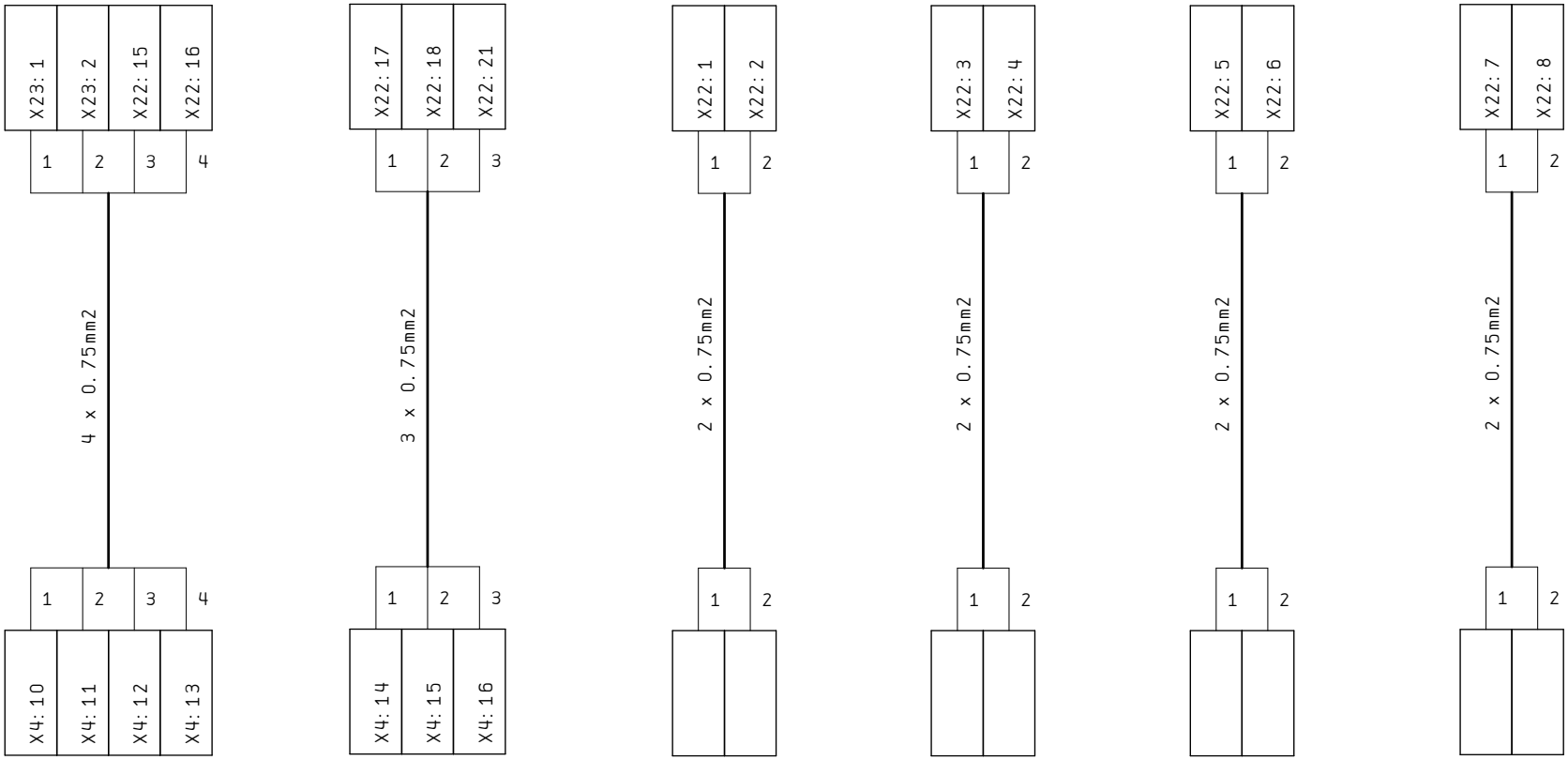

Dosing Box
Valve, Pressure Switch

Dosierbox
Ventil, Druckschalter

Dosing Box
Flow Meter

Dosierbox
Durchflussmesser

Engine Control
Enable Signal

Motorsteuerung
Freigabesignal

Bridge if
not used

Brücke wenn
nicht verwendet

Engine Control
Engine Running

Motorsteuerung
Motor läuft

Engine Control
Load Curve 2

Motorsteuerung
Lastkurve 2

Engine Control
CO2-Request

Motorsteuerung
CO2-Anforderung

			Urspr.	04.05.06	SER COdiNOx3 (UL Vers.)		24V Connections Cable Plan	SER_111u1_A-8835_b
			Bearb.	27.03.07				
			Name	BEN				
Änderung	Datum	Name	Norm		Urspr.	Ers. f.	Ers. d.	

=
+
Bl. 81
84 Bl.

Terminals Control Cabinet / Klemmen Schaltschrank

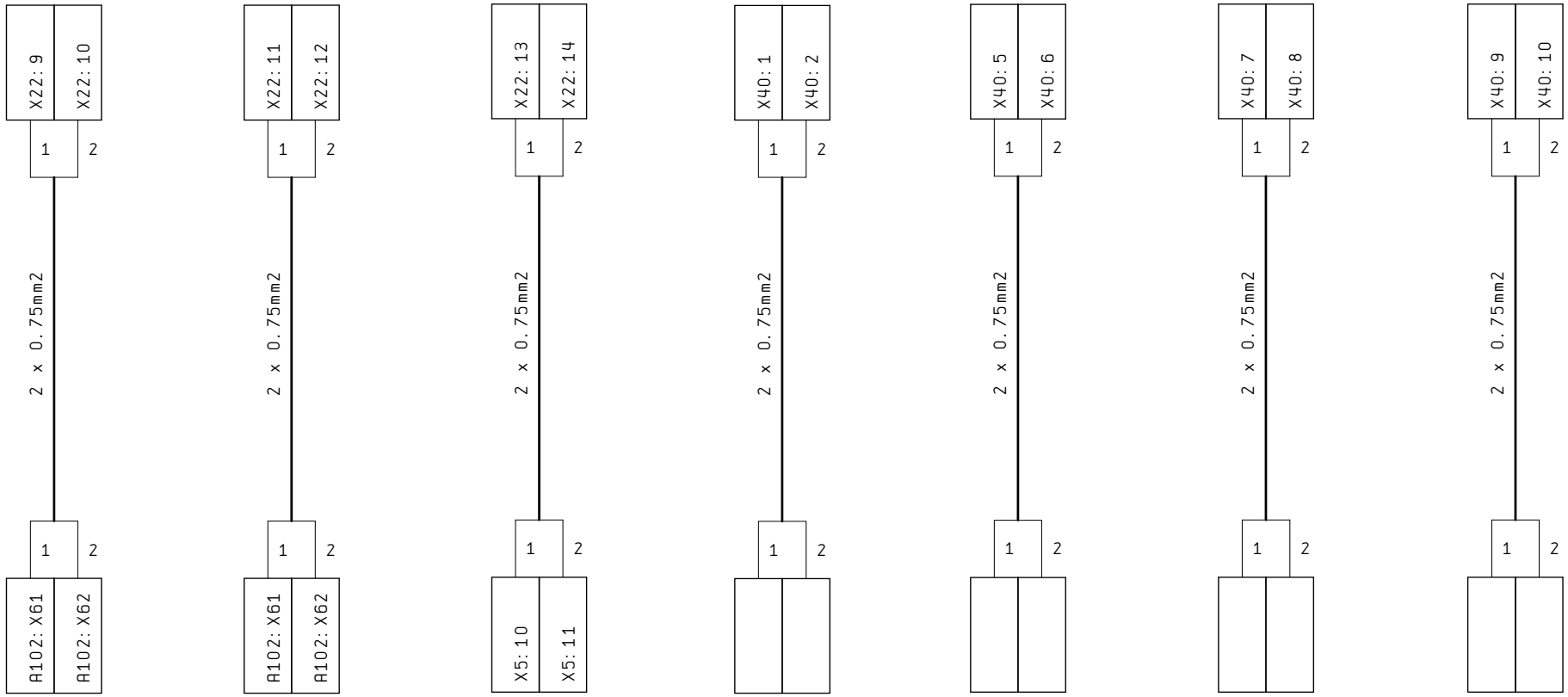

Temperature Monitoring OXI-Box	Temperature Monitoring SCR	Reactant Tank Level Switch	Engine Control System OK	Engine Control CO2-Release	Engine Control Coditheen-Release	Engine Control No Common Warning
Temperatur-überwachung OXI-Box	Temperatur-überwachung SCR	Reaktionsmittel-niveauschalter	Motorsteuerung System i.o.	Motorsteuerung CO2-Freigabe	Motorsteuerung Coditheen-Freigabe	Motorsteuerung Keine Sammelwarnung

Terminals Control Cabinet / Klemmen Schaltschrank

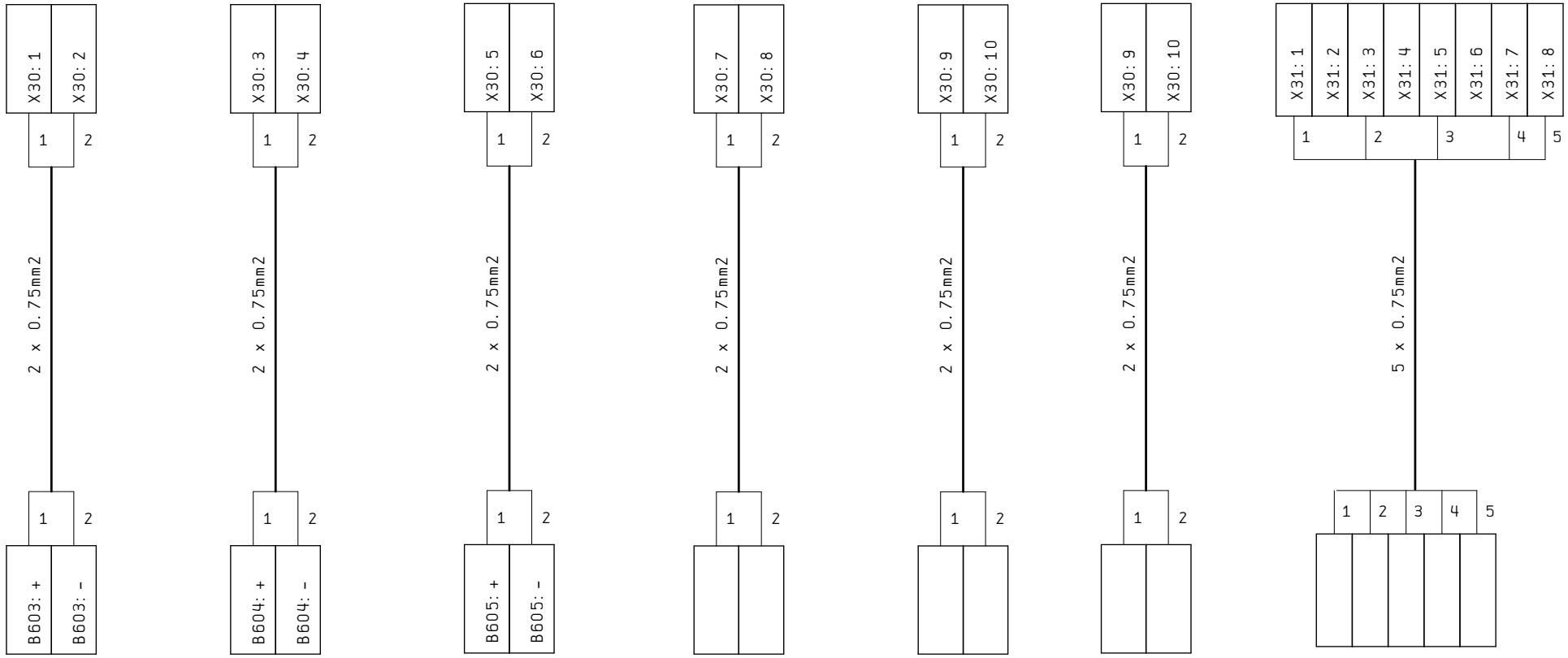

P-Sensor Converter	Thermocouple after Oxi-Box	Thermocouple after Converter	Engine Control CO2-Signal	Engine Control Load-Signal	Thermocouple befor Converter	Analogue outputs
DruckSensor Reaktor	Thermoelement nach Oxi-Box	Thermoelement nach Reaktor	Motorsteuerung CO2-Signal	Motorsteuerung Lastsignal	Thermolelment vor Reaktor	Analoge Ausgänge

			Urspr.	04.05.06	SER COdiNOx3 (UL Vers.)			Analogue Signals Cable Plan	SER_111u1_A-8835_b
			Bearb.	13.03.12					
			Name	MAL					
Änderung	Datum	Name	Norm		Urspr.	Ers. f.	Ers. d.		

=
+
Bl. 83
84 Bl.

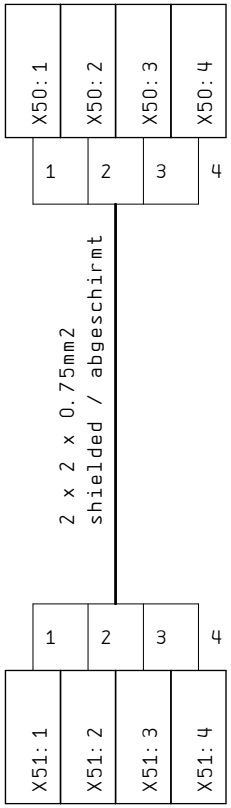

Terminalbox
NOx-Sensor

Klemmbox
NOx-Sensor

83

			Urspr.	04.05.06	SER COdiNOx3 (UL Vers.)			Feed Forward Cable Plan	SER_111u1_A-8835_b
			Bearb.	14.05.09					
			Name	BEN					
Änderung	Datum	Name	Norm		Urspr.	Ers. f.	Ers. d.		

=
+

Bl. 84
84 Bl.

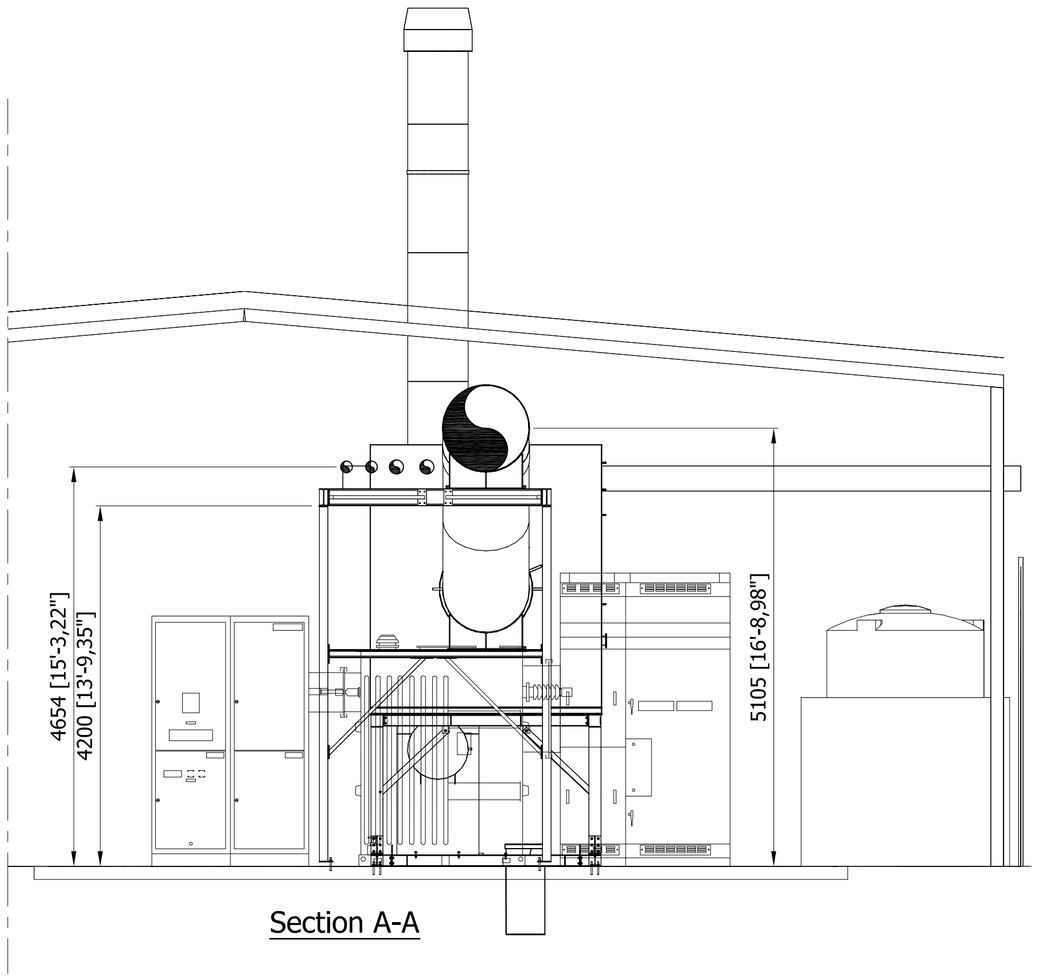

Section A-A

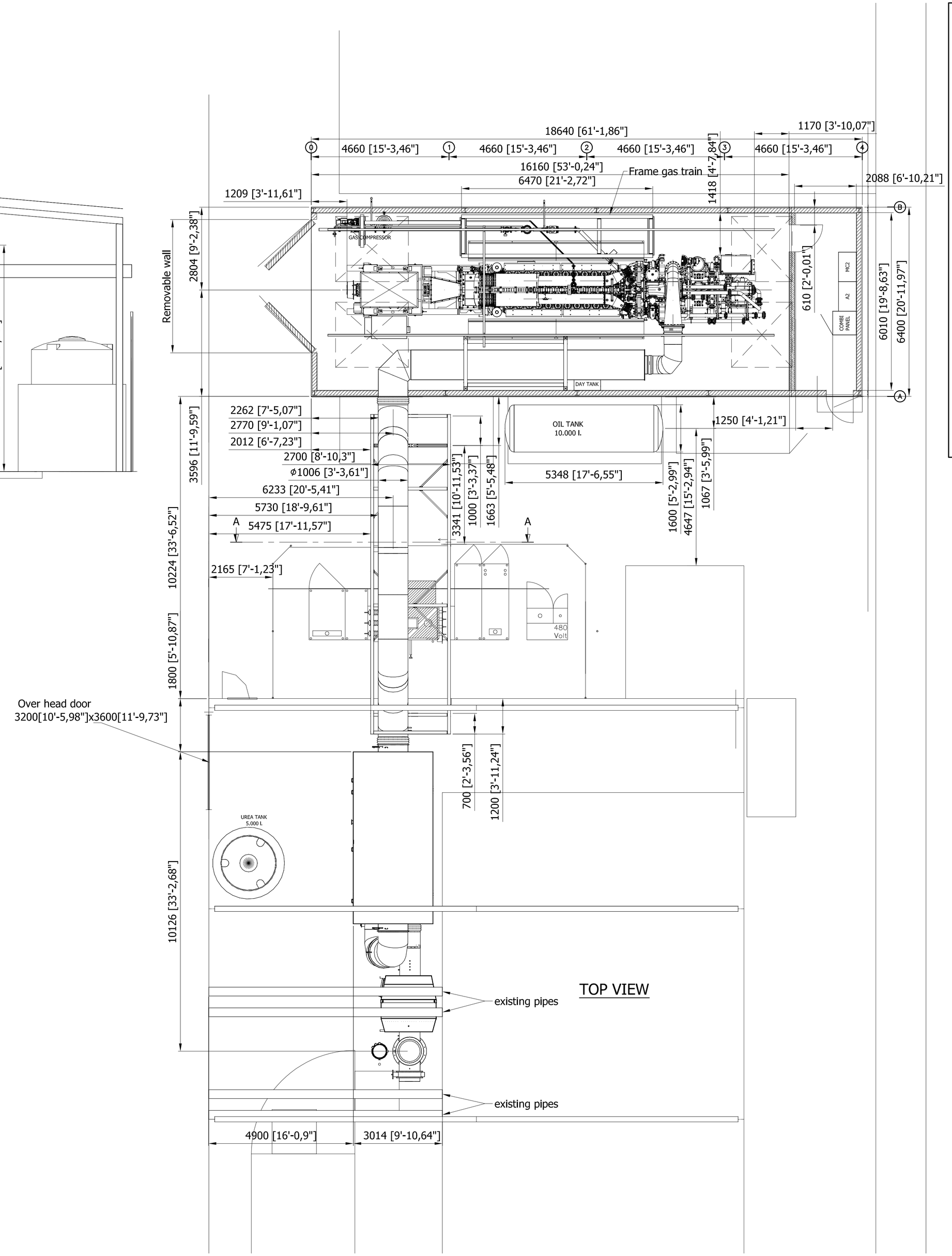

TOP VIEW

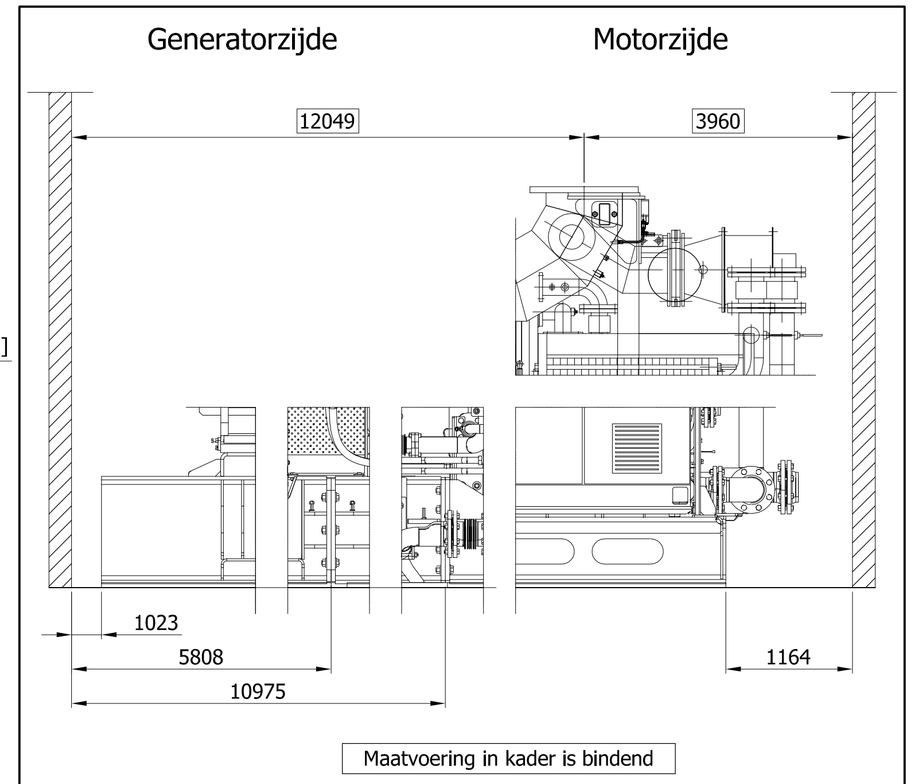

Maatvoering in kader is bindend

Detail lekbak en frame
tbv plaatsing motor

CONFIDENTIAL

REVISED AS MARKED		
Approved by:	Date:	Initial:

REV.	DRW.	DATE	DESCRIPTION	CHKD.
M	JV	190613	Revised as marked	EJR
L	EJR	280513	Engine detail added to drawing	
K	JV	180213	Compenent lay-out comptelely changed	RH
J	JV	290113	Revised as marked	RH

REV.	DRW.	DATE	DESCRIPTION	CHKD.
I	JV	171212	Revised as marked	RH
H	RH	180711	Engine drawing added, dimensions to US units	
G	RH	130611	Drawing of building added	
F	RH	270411	Changed after meeting at location	
E	RH	070311	Latest situation drawing (2011-03-04) added	

REV.	DRW.	DATE	DESCRIPTION	CHKD.
D	RH	020311	Location no. changed	
C	RH	280211	Changed to layout location 3	
B	JvW	160211	Changed to inside enosure	RH
A	RH	100211	Direction CO2 connection changed.	
0	JvW	170910	First Issue	MR

PROJECTNUMBER: 4075	PROJECT: Houweling Location 2	REF. NR.: J K214	REF. NR. CLIENT
CLIENT:		DRAWN: J. van Waas	DATE: 17-09-2010
TITLE: JMS 624 4,4 MW + Exhaust Purifier Component Lay-out - Top View		CHECKED: M. Reynolds	DATE: 17-09-2010
		SCALE: 1:75	FORMAT: A1
Jenbacher gas engines		ALL RIGHTS STRICTLY PRESERVED REPRODUCTION OR ISSUE TO THIRD PARTIES IS NOT PERMITTED WITHOUT WRITTEN AUTHORITY OF GE JENBACHER BV	PROJECTION:
		DRAWING NUMBER: 10-0564E-01	REVISIE: M

Jenbacher BV * Kelvinring 58 * 2952 BG Alblasserdam
The Netherlands * Tel: +31/88/0019700 * Fax: +31/88/0019701
Website: www.gejenbacher.com * e-mail: jenbacher.netherlands@ge.com

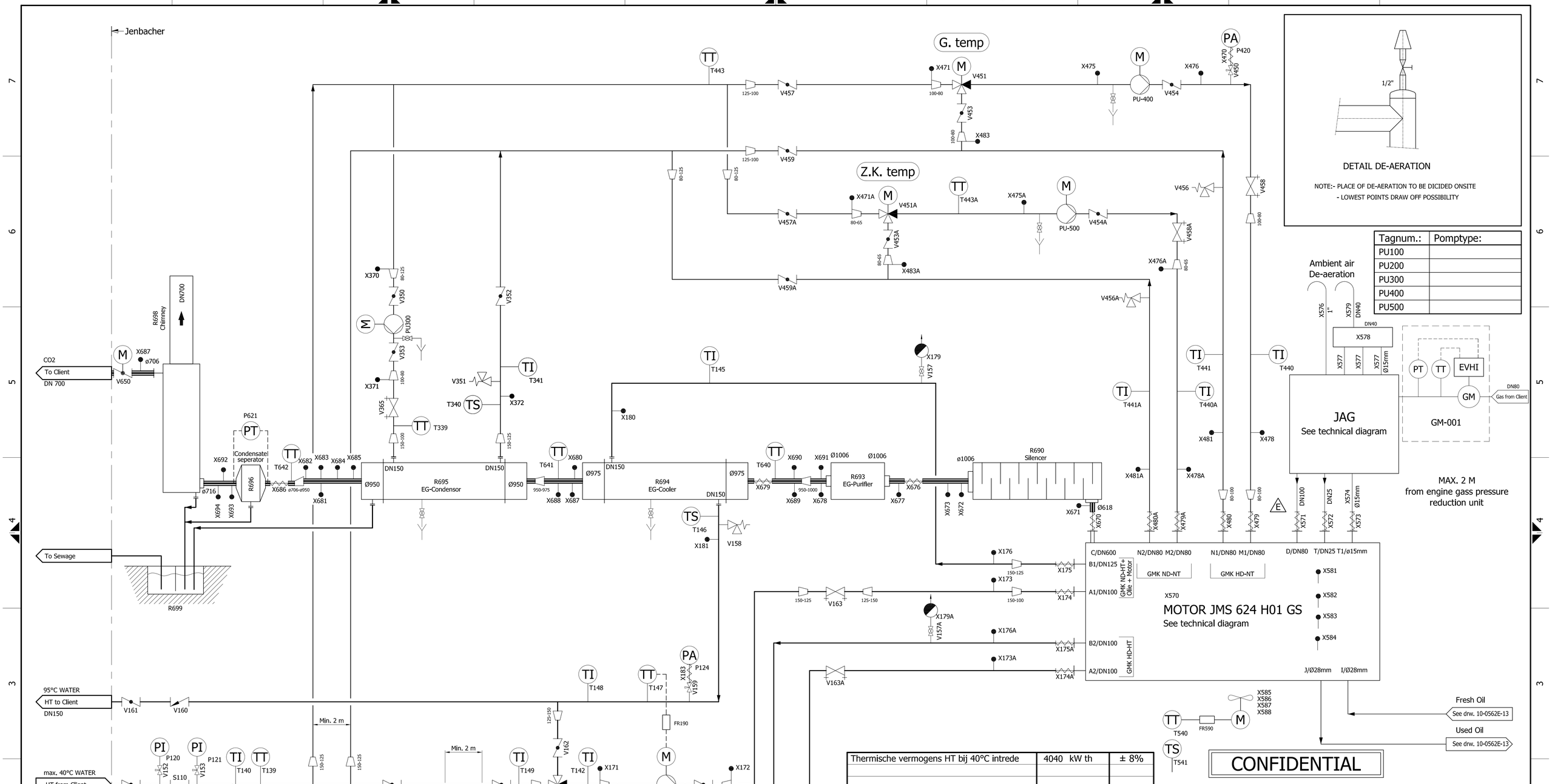

Tagnum.:	Pomptype:
PU100	
PU200	
PU300	
PU400	
PU500	

Thermische vermogens HT bij 40°C intrede	4040 kW th	± 8%
Thermische vermogens condensor 40°C	631 kW th	± 8%
Debiet HT pomp bij 40°C retourwater	74 m³/h	± 8%
Drukverlies systeem Jenbacher	2,9 bar	
Opvoerhoogte pomp	30 mtr.	
Debiet LT pomp	40 m³/h	± 8%
Drukverlies systeem Jenbacher	0,6 bar	
Opvoerhoogte pomp	6 mtr.	
Debiet GMK ND-NT	20 m³/h	± 8%
Drukverlies systeem Jenbacher	0,6 bar	
Opvoerhoogte pomp	6 mtr.	
Debiet Condensorpomp	60 m³/h	± 8%
Drukverlies systeem Jenbacher	0,5 bar	
Opvoerhoogte pomp	6,5 mtr.	
Gasverbruik	1052 m³/h	± 5%
Gewenste gasdruk tussen	1,36-5,86	bar(g)
Hu - Calorisch	8,9 kWh/Nm³	
Luchtovermaat (lambda)	1,92	

TAGNUMBERING

Code:	Description	Group:	Description:
PU	Pumps	100	HT-net
S	Filters	200	LT-net
P	Pressure indicators	300	Condensor-net
T	Temp. indicators	400	2e trap intercooler
V	Valves	500	Other components
X	Other components	600	EG traject
FR	Frequency regulator	700	Thermometer
R	EG components	800	Reserve

REVISED AS MARKED

Approved by:	Date:	Initial:

REV.	DRW.	DATE	DESCRIPTION	CHKD.
D	M.R.	020811	HT to / from Client updated	
C	RH	120711	Several changes	
B	JvW	010611	Gas pressure and Hu changed	-
A	JPL	250511	Several changes	RH
E	BP	030811	several changes	

PROJECTNUMBER	PROJECT: Locatie 2	REF. NR.	REF. NR. CLIENT
CLIENT: Houwelingen Oxnard		DRAWN: R. Heller	DATE: 02-05-2011
TITEL: JMS 624 H01 4,4 MW + Exhaust Purifier P&ID BOP		CHECKED:	DATE:
		SCALE: nts	FORMAT: A1

Jenbacher gas engines

Jenbacher BV * Kelvinring 58 * 2952 BG Alblasserdam
The Netherlands * Tel: +31/88/0019700 * Fax: +31/88/0019701
Website: www.gejenbacher.com * e-mail: jenbacher.netherlands@ge.com

ALL RIGHTS STRICTLY PRESERVED REPRODUCTION OR ISSUE TO THIRD PARTIES IS NOT PERMITTED WITHOUT WRITTEN AUTHORITY OF GE JENBACHER BV

PROJECTION:

DRAWING NUMBER: 10-0562E-11

REVISIE: E

APPENDIX C

Appendix C: Legal and Regulatory Documents

Index of Agreements

Name	Description
Operating Permit 14_04_08	Ventura County air Pollution Control District's Permit to Operate
Authority to Construct 9-21-2011	Ventura County air Pollution Control District's Authority to Construct
AB 1613 PPA Executed	Power Purchase Agreement
Application for Limited Exemption from CARB	Signed Application for Limited Exemption from 'Cap and Trade'
Generator Interconnection Agreement	Utility Interconnection Agreement

Ventura County
Air Pollution
Control District

669 County Square Drive
Ventura, California 93003

tel 805/645-1400
fax 805/645-1444
www.vcapcd.org

Michael Villegas
Air Pollution Control Officer

RECEIVED
AUG 27 2014
By

PERMIT TO OPERATE
Number 08132

Valid July 1, 2014 to June 30, 2015

This Permit Has Been Issued To The Following:

Company Name / Address:

Houweling's Nurseries
645 W. Laguna Rd.
Camarillo, CA 93012

Facility Name / Address:

Houweling's Nurseries
645 W. Laguna Rd.
Camarillo, CA 93012

Permission Is Hereby Granted To Operate The Following:

This permit has been issued pursuant to Rule 35, "Elective Emission Limits", and therefore is not subject to Rule 33, "Part 70 Permits". As required by Rule 35.B.1, the permit and permitted emissions include emission units exempt from permit pursuant to Rule 23, "Exemptions From Permit"

Cogeneration Plant, to provide electricity and heat to tomato growing operation and electricity to SCE grid; and to provide gaseous carbon dioxide as "fertilizer" for tomato greenhouses. The engines are exhausted to the greenhouses or to the atmosphere.

3 - 6023 BHP GE Jenbacher Natural Gas Engines, Model JMS 624-GS-N.L H01, Lean Burn, 4-Stroke, equipped with a Hug Engineering Selective Catalytic Reduction (SCR) Unit with urea injection and oxidation catalyst, each powering a 4.34 MW generator (Cogens 1, 2, and 3)

Natural Gas Fired Boilers, used for backup heating of greenhouses

4 - 30.3 MMBTU/hr Saskatoon Boilers, Model VWG-1250, Serial Nos. 2892, 2897, 2909, and 2910, equipped with a Vitotherm burner, Model VGOI/s-1200/FRQ/M/AF (exempt per Rule 23.J.16 - agricultural operation)

Emergency Use Diesel Engines, emergency electricity generators for greenhouses

1 - 2206 BHP Caterpillar Diesel Engine, Model 3512CDITA, Serial No. EBG00157, 2007 Model Year, Tier 2, EPA Family Name: 7CPXL58.6T2E, CARB EO U-R-001-0298-1, emergency electricity generator, ID "Phase 5&6" (exempt per Rule 23.J.16 - agricultural operation)
1 - 587 BHP Caterpillar Diesel Engine, Model 3406, Serial No. 4ZR04994, 1999 Model Year, Tier 0, emergency electricity generator, ID "Phase 3&4" (exempt per Rule 23.J.16 - agricultural operation)
1 - 587 BHP Caterpillar Diesel Engine, Model 3406, Serial No.

printed on recycled paper

4ZR01727, 1996 Model Year, Tier 0, emergency electricity generator, ID "Phase 1&2" (exempt per Rule 23.J.16 - agricultural operation)

Emergency Use Diesel Engine for facility fire water pump

1 - 73 BHP Clarke Detroit Diesel-Allison Diesel Engine, Model PDFP-L4YT 2501, Serial No. U734611A, Tier 0, emergency fire water pump engine.

This Permit Has Been Issued Subject To The Following Conditions:

1. Permitted Emissions

	Tons/Year	Pounds/Hour
Reactive Organics	5.28	3.10
Nitrogen Oxides	10.36	22.59
Particulate Matter	3.76	2.76
Sulfur Oxides	0.28	0.53
Carbon Monoxide	72.59	45.61
Ammonia	4.76	1.47

2. The emissions units that are not exempt are the three 6023 BHP GE Jenbacher natural gas engines and the one 73 BHP Clarke Detroit Diesel emergency fire water pump engine. The permitted emissions for these emissions units are subject to Rule 26, "New Source Review". These permitted emissions are:

	Tons/Year	Pounds/Hour
Reactive Organics	4.93	1.54
Nitrogen Oxides	6.48	2.49
Particulate Matter	3.32	1.06
Sulfur Oxides	0.21	0.07
Carbon Monoxide	62.77	19.60
Ammonia	4.76	1.47

3. The four boilers and three emergency electricity generating diesel engines are exempt from permit requirements based on Rule 23.J.16, which exempts emissions units used exclusively in agricultural operations with actual emissions that remain below specific thresholds. The combined permitted emissions (potential emissions as limited by this permit) for each pollutant are less than each respective Rule 23.J.16 threshold. The four boilers and three emergency electricity generating diesel engines are included in this permit pursuant to Rule 35, "Elective Emission Limits". The Rule 35 limits are necessary to demonstrate that the stationary source does not require a federal Title V operating permit pursuant to Rule 33, "Part 70 Permits".

4. Combined natural gas consumption at the three 6023 BHP GE Jenbacher natural gas engines shall not exceed 722.1 million cubic feet per year.

   In order to comply with this condition, the permittee shall

maintain monthly records of natural gas consumption at the engines. The monthly records shall be summed for the previous twelve months. Natural gas consumption totals for any of these rolling twelve month periods in excess of the specified limit shall be considered a violation of this condition.

This condition is federally enforceable pursuant to Rule 35, "Elective Emission Limits", for demonstrating compliance with the carbon monoxide and greenhouse gases Title V emission thresholds.

5. Natural gas consumption for the combined use of the four Saskatoon boilers shall not exceed 97.5 million cubic feet per year. This is a combined limit for all four boilers and not a limit for an individual boiler.

   In order to comply with this condition, the permittee shall maintain monthly records of natural gas consumption at the boilers. The monthly records shall be summed for the previous twelve months. Natural gas consumption totals for any of these rolling twelve month periods in excess of the specified limit shall be considered a violation of this condition.

   This condition is federally-enforceable pursuant to Rule 35 for demonstrating compliance with the carbon monoxide and greenhouse gases Title V emission thresholds.

6. Annual hours of operation for each of the four emergency use diesel engines shall not exceed 50 hours per year for each engine. This includes the three emergency electricity generating engines and the emergency fire water pump engine. This limit includes emergency operation as well as operation for engine maintenance and testing.

   In order to comply with this condition, the permittee shall maintain monthly records of hours of operation at each diesel engine as measured by a non-resettable hour meter. The monthly records shall be summed for the previous twelve months. Hours of operation for each engine for any of these rolling twelve month periods in excess of the specified limits shall be considered a violation of this condition.

   This condition is federally-enforceable pursuant to Rule 35 for demonstrating compliance with the carbon monoxide and greenhouse gases Title V emission thresholds.

7. The three 6023 BHP GE Jenbacher natural gas engines shall be operated in compliance with the following emission limits:

   a) The emissions of nitrogen oxides (NOx as nitrogen dioxide) from each engine shall not exceed 5 ppmvd, corrected to 15% oxygen. This emission limit is applied as BACT and is more stringent than the Rule 74.9 and the NSPS Subpart JJJJ limits.
   b) The emissions of reactive organic compounds (ROCs) from each engine shall not exceed 11 ppmvd, corrected to 15% oxygen,

measured as methane. This emission limit is applied as BACT and is more stringent than the Rule 74.9 and the NSPS Subpart JJJJ limits.

c) The emissions of carbon monoxide (CO) from each engine shall not exceed 80 ppmvd, corrected to 15% oxygen. This limit is more stringent than the Rule 74.9 and NSPS Subpart JJJJ limits. This limit is federally enforceable pursuant to Rule 35, "Elective Emission Limits".

d) The emissions of ammonia (NH3) for each engine shall not exceed 10 ppmvd, corrected to 15% oxygen. This limit is applied as BACT and is more stringent than the Rule 74.9 limit.

In order to comply with this condition, the permittee shall have each engine's emissions tested biennially (no less than once every 24 months) as required by Rule 74.9.

8. The SCR Unit inlet temperature at each of the 6023 BHP GE Jenbacher natural gas engines shall not be less than 360 degrees Celsius when the unit is operating at normal operating load. In order to comply with this condition, the permittee shall maintain daily records of the SCR Unit inlet temperature for each engine.

9. In order to comply with the emission limitations of Condition No. 7, the permittee shall have each engine's emissions tested no less than once every 24 months. Testing shall be performed by an independent contractor at the engine's expected maximum operating load in accordance with Rule 74.9.G, which includes California ARB Method 100 for oxides of nitrogen, carbon monoxide, and stack gas oxygen; EPA Method 18 or 25 for reactive organic compounds; and BAAQMD Method ST-1B (dated 1/20/82) for ammonia.

10. Prior to conducting any emissions test associated with the biennial Rule 74.9 engine compliance determination, the permittee shall notify the APCD Compliance Division. Written notification shall be received no less than 15 calendar days prior to the test. The emissions test report and results shall be submitted to the APCD Compliance Division within 45 days after the test.

11. The 6023 BHP GE Jenbacher engines shall be fired on Public Utilities Commission-regulated natural gas only. Records shall be used to substantiate that this is the type of fuel used.

12. The 6023 BHP GE Jenbacher natural gas engines are exempt from 40 CFR Part 63, Subpart ZZZZ, National Emission Standards for Hazardous Air Pollutants for Stationary Reciprocating Internal Combustion Engines (RICE NESHAP) because they were constructed on or after June 12, 2006.

13. The 6023 BHP GE Jenbacher natural gas engines are subject to 40 CFR Part 60, Subpart JJJJ, Standards of Performance for Stationary Spark Ignition Internal Combustion Engines. Pursuant to Section 60.4233(e) and Table 1, the emission limits are 60 ppmvd ROC, 82 ppmvd NOx, and 270 ppmvd CO. These emission limits are referenced

at 15% oxygen. Pursuant to Section 60.4243(b), emissions tests for compliance with theses limits must be conducted every 8,760 hours of operation or every 3 years, whichever comes first. Testing shall comply with Section 60.4244. Permittee shall comply with notification, reporting, and recordkeeping requirements of Section 60.4245.

14. Pursuant to Rule 74.9.C, the permittee shall maintain a District approved Engine Operator Inspection Plan. The plan shall include a specific emission inspection procedure to assure that an engine is operated in continual compliance with the provisions of Rule 74.9. At a minimum, inspections shall be conducted quarterly unless the engine operated less than 32 hours in each of the three months of the applicable quarter, as measured by a non-resettable elapsed operating hour meter.

    Pursuant to Rule 74.9.B.5, a screening analysis of NOx and CO emissions shall be performed quarterly unless the biennial source test specified in Subsection B.4 is required, or the engine operated less than 32 hours in each of the three months of the applicable quarter, as measured by a non-resettable elapsed operating hour meter. The screening analyses shall be performed using a portable analyzer either verified by the Environmental Protection Agency or approved in writing by the APCO. The portable analyzer shall be calibrated, maintained and operated in accordance with the recommendations of the manufacturer.

15. Pursuant to Rule 74.9.E, Recordkeeping Requirements, the permittee shall maintain an inspection log for each engine containing, at a minimum, the following data:

    a) Identification and location of each engine subject to Rule 74.9.

    b) Date and results of each screening analysis and inspection and a summary of any emissions corrective maintenance action taken.

    c) Any additional information required by the Engine Operator Inspection Plan.

    d) For each engine exempt from quarterly screening analysis pursuant to Subsection B.5.b of Rule 74.9 and inspection pursuant to subsection C.4, total hours of operation shall be recorded monthly. Records shall be maintained for a period of 2 years after the date of each entry.

    The permittee shall maintain the inspection log for a period of 2 years after the date of each entry. The log shall be made available for inspection by the District upon request.

16. Pursuant to Rule 74.9.F, Reporting Requirements, within 45 days of the end date of each permit renewal period, the operator of a permitted engine subject to the provisions of the rule shall

provide the District with the following information:

a) Engine manufacturer, model number, operator identification number and location of each engine.

b) A summary of maintenance reports during the renewal period, including quarterly screening data if applicable.

For each engine exempt pursuant to Subsection D.2, total annual operating hours shall be reported annually. For each engine exempt pursuant to subsection D.3, total annual hours of maintenance operaton shall be reported annually. Reports shall be provided to the District after every calendar year by February 15.

17. The four Saskatoon Boilers shall comply with APCD Rule 74.15, "Boilers, Steam Generators, and Process Heaters". This includes, but is not limited to, the following permit conditions.

18. Four Saskatoon Boiler Emission Limits and Testing:

a) Oxides of nitrogen (NOx measured as NO2) emissions shall not exceed 40 ppmvd, corrected to 3% oxygen, while burning natural gas. This limitation is applied for Rule 74.15.B.1 compliance.

b) Carbon monoxide (CO) emissions shall not exceed 250 ppmvd, corrected to 3% oxygen, while burning natural gas. This limitation is federally-enforceable pursuant to Rule 35 for demonstrating compliance with the carbon monoxide Title V theshold. This limitation is more stringent than Rule 74.15.

In order to comply with this condition, the permittee shall have each unit's emissions tested no less than once every 24 months, pursuant to Rule 74.15. Testing shall be performed by an independent testing contractor at the unit's expected maximum operating load in accordance with APCD Rule 74.15.E, which includes California ARB Method 100 for oxides of nitrogen, carbon monoxide, and stack gas oxygen.

Prior to conducting any emissions test associated with the required biennial compliance detemination, the permittee shall notify the APCD Compliance Division. Written notification shall be received no less than 15 calendar days prior to the test. The emissions test report and results shall be submitted to the APCD Compliance Division within 45 days after the test.

19. The Saskatoon Boilers shall be fired on Public Utilities Commission-regulated natural gas only. Records shall be maintained to substantiate that this is the type of fuel used.

20. The three emergency electricity generating diesel engines are exempt from Rule 74.9, "Stationary Internal Combustion Engines", because they are used directly and exclusively for agricultural operations. (Rule 74.9.D.5)

These three emergency electricity generating engines hold VCAPCD Agricultural Engine Registrations (Nos. 22-1, 22-2, and 22-3) pursuant to Rule 250, "Registration of Agricultural Engines". The engines are required to operate in compliance with the California ARB Airborne Toxic Control Measure (ATCM) for Stationary Compression Ignition Engines.

21. The 73 BHP Clarke Detroit Diesel-Allison Diesel Engine used to power an emergency fire water pump shall operate in compliance with the following conditions:

    a) Annual hours of operation for maintenance and testing shall not exceed 20 hours per year. This limit does not include emergency use. This limit is applied pursuant to the California ARB Airborne Toxic Control Measure (ATCM) for Stationary Compression Ignition Engines. The engine shall be equipped with a non-resttable hour meter and the permittee shall maintain a log that differentiates operation during maintenance and testing from emergency operation. The monthly operating hours shall be summed for the previous 12 months. Total operating hours for any of these 12 month periods, excluding emergency operation, in excess of the specified limit shall be considered a violation of this condition.

    b) The emergency diesel engine shall be operated in compliance with all applicable requirements of the California ATCM for Stationary Compression Ignition Engines, Section 93115 through 93115.15, Title 17, California Code of Regulations. Pursuant to Section 93115.5(b), the permittee shall not add to the engine or any fuel tank directly attached to the engine any fuel unless the fuel is CARB diesel fuel or another fuel that meets the requirements of Section 93115.5(b).

    c) Pursuant to Rule 74.9.D.3, the emergency engine is exempt from Rule 74.9, "Stationary Internal Combustion Engines", provided that is operated during an emergency or maintenance operation. Maintenance operation is limited to 50 hours per calendar year and is defined as "the use of an emergency standby engine and fuel system during testing, repair, and routine maintenance to verify its readiness for emergency standby use".

22. The permittee shall maintain the following records:

    a) Monthly and rolling twelve month records of natural gas consumption for each of the 6023 BHP GE Jenbacher natural gas engines.

    b) Daily records of the urea injection rate and the SCR Unit inlet temperature for each of the 6023 BHP GE Jenbacher natural gas engines.

    c) Monthly and rolling twelve month records of natural gas

consumption for the combined use of the four Saskatoon boilers.

d) Monthly and rolling twelve month records of hours of operation for each of the four emergency diesel engines. Maintain records of maintenance and testing usage and emergency use.

e) Source test records and records required for Rule 74.9 for the 6023 BHP GE Jenbacher natural gas engines.

f) Records and reports required by NSPS Subpart JJJJ for the 6023 BHP GE Jenbacher natural gas engines.

g) Source test records for the four Saskatoon boilers

These records shall be maintained at the stationary source for at least two years and shall be made available to District personnel upon request.

23. All permit conditions, throughput limits, and gas consumption limits on this permit are federally enforceable pursuant to Rule 35, "Elective Emission Limits." This was established pursuant to Application Nos. 08132-100 and 08132-121. Any subsequent new emissions units, throughput limit increases or gas consumption limit increases are subject to Rule 26, "New Source Review," and are considered to be federally enforceable as Rule 26 is federally enforceable.

Within 30 days after receipt of this permit, the permittee may petition the Hearing Board to review any new or modified condition (Rule 22).

This permit, or a copy, shall be posted reasonably close to the subject equipment and shall be accessible to inspection personnel (Rule 19). This permit is not transferable from one location to another unless the equipment is specifically listed as being portable (Rule 20).

This Permit to Operate shall not be construed to allow any emission unit to operate in violation of any state or federal emission standard or any rule of the District.

Terri Thomas
Engineering Division

For:

Michael Villegas
Air Pollution Control Officer

Ventura County
Air Pollution
Control District

669 County Square Drive
Ventura, California 93003

tel 805/645-1400
fax 805/645-1444
www.vcapcd.org

Michael Villegas
Air Pollution Control Officer

AUTHORITY TO CONSTRUCT
Number 08132-100

Valid November 15, 2011 to November 14, 2013

This Permit Has Been Issued To The Following:

Company Name / Address:

Houweling's Nurseries
645 W. Laguna Rd.
Camarillo, CA 93012

Facility Name / Address:

Houweling's Nurseries
645 W. Laguna Rd.
Camarillo, CA 93012

Permission Is Hereby Granted To Construct The Following:

Cogeneration Plant, to provide electricity and heat to tomato growing operation and electricity to SCE grid; and to provide gaseous carbon dioxide as "fertilizer" for tomato greenhouses.

3 - 6023 BHP GE Jenbacher Natural Gas Engines, Model J 624 GS-H01, Lean Burn, 4-Stroke, equipped with a Hug Engineering Selective Catalytic Reduction (SCR) Unit with urea injection and oxidation catalyst, each powering a 4.34 MW generator (Cogen 1, Cogen 2, Cogen 3) Engines exhaust to greenhouses or to atmosphere.

The following boilers and engines are existing at this facility and are not considered to be new emissions units.

Natural Gas Fired Boilers, to be used for backup heating of greenhouses after the installation of the Cogeneration Plant

1 - 52.3 MMBTU/hr Saskatoon Boiler, Model VWG-1250, Serial No. 2910 (exempt per Rule 23.J.16 - agricultural operation)
1 - 52.3 MMBTU/hr Saskatoon Boiler, Model VWG-1250, Serial No. 2909 (exempt per Rule 23.J.16 - agricultural operation)
1 - 48.7 MMBTU/hr Saskatoon Boiler, Model VWG-1250, Serial No. 2892 (exempt per Rule 23.J.16 - agricultural operation)
1 - 47.5 MMBTU/hr Saskatoon Boiler, Model VWG-1250, Serial No. 2897 (exempt per Rule 23.J.16 - agricultural operation)

Emergency Use Diesel Engines, emergency electricity generators for greenhouses and emergency fire water pump for facility in general

1 - 2206 BHP Caterpillar Diesel Engine, Model 3512CDITA, Serial No. EBG00157, 2007 Model Year, Tier 2, EPA Family Name: 7CPXL58.6T2E, CARB EO U-R-001-0298-1, emergency electricity generator, ID "Phase 5&6" (exempt per Rule 23.J.16 - agricultural operation)
1 - 587 BHP Caterpillar Diesel Engine, Model 3406, Serial No. 4ZR04994, 1999 Model Year, Tier 0, emergency electricity generator, ID "Phase 3&4" (exempt per Rule 23.J.16 - agricultural

printed on recycled paper

operation)
1 - 587 BHP Caterpillar Diesel Engine, Model 3406, Serial No. 4ZR01727, 1996 Model Year, Tier 0, emergency electricity generator, ID "Phase 1&2" (exempt per Rule 23.J.16 - agricultural operation)
1 - 73 BHP Clarke Detroit Diesel-Allison Diesel Engine, Model PDFP-L4YT 2501, Serial No. U734611A, Tier 0, emergency fire water pump engine.

This Permit Has Been Issued Subject To The Following Conditions:

1. Permitted Emissions

	Tons/Year	Pounds/Hour
Reactive Organics	6.16	4.20
Nitrogen Oxides	17.08	26.37
Particulate Matter	4.03	3.33
Sulfur Oxides	0.30	0.58
Carbon Monoxide	86.48	60.30
Ammonia	3.22	1.47

2. This Authority to Construct authorizes the installation of the Cogeneration Plant that includes three 6023 BHP GE Jenbacher natural gas fired engines. The boilers and emergency electricity generating engines are existing emissions units that have been exempt from permit requirements based on Rule 23.J.16, which exempts emissions units used exclusively in agricultural operations with actual emissions that remain below specific thresholds. The four boilers and three emergency electricity generating diesel engines are included on the permit pursuant to Rule 35, "Elective Emission Limits". The Rule 35 limits are necessary to demonstrate that the stationary source does not require a federal Title V operating permit pursuant to Rule 33, "Part 70 Permits".

3. The combined NOx permitted emissions (potential emissions as limited by this permit) for the four boilers and three emergency electricity generating diesel engines exceed the Rule 23.J.16 actual emissions threshold of 12.5 tons per year NOx. However, the actual emissions from the four boilers and three emergency electricity generating diesel engines are less than the Rule 23.J.16 actual emissions threshold of 12.5 tons per year NOx. Therefore, the permittee shall submit an annual report documenting the actual NOx emissions for the boilers and emergency electricity generating diesel engines in order to demonstrate that the emissions units remain exempt from permit pursuant to Rule 23.J.16. The report shall be submitted to the APCD Compliance Division within 45 days after the end of each permit period.

4. The proposed permitted emissions for the new three 6023 BHP GE Jenbacher natural gas engines are:

	Tons/Year	Pounds/Hour
Reactive Organics	4.84	2.21
Nitrogen Oxides	4.35	1.98

Particulate Matter	2.24	1.02
Sulfur Oxides	0.14	0.06
Carbon Monoxide	42.41	19.34
Ammonia	3.22	1.47

The emissions increases for this Authority to Construct are the tons per year permitted emissions for the three natural gas engines as shown above. The emissions increases are below the emission offset thresholds of Rule 26.2.B. Therefore, emission offsets are not required for this Authority to Construct. Emissions units exempt from permit are not subject to the best available control technology (BACT) and emission offset requirements of Rule 26, "New Source Review".

5. Combined natural gas consumption at the three 6023 BHP Jenbacher natural gas engines shall not exceed 488.1 million cubic feet per year per engine.

   In order to comply with this condition, the permittee shall maintain monthly records of natural gas consumption for the combined use of the three engines. The monthly records shall be summed for the previous twelve months. Natural gas consumption totals for any of these rolling twelve month periods in excess of the specified limit shall be considered a violation of this condition.

   This condition is federally-enforceable pursuant to Rule 35, "Elective Emission Limits", for demonstrating compliance with the carbon monoxide and greenhouse gases Title V emission thresholds.

6. Natural gas consumption for the combined use of the four Saskatoon boilers shall not exceed 450 million cubic feet per year. This is a combined limit for all four boilers and not a limit for an individual boiler.

   In order to comply with this condition, the permittee shall maintain monthly records of natural gas consumption at the boilers. The monthly records shall be summed for the previous twelve months. Natural gas consumption totals for any of these rolling twelve month periods in excess of the specified limit shall be considered a violation of this condition.

   This condition is federally-enforceable pursuant to Rule 35 for demonstrating compliance with the carbon monoxide and greenhouse gases Title V emission thresholds.

7. Annual hours of operation for each of the four emergency use diesel engines shall not exceed 50 hours per year for each engine. This includes the three emergency electricity generating engines and the emergency fire water pump engine. This limit includes emergency operation as well as operation for engine maintenance and testing.

   In order to comply with this condition, the permittee shall

maintain monthly records of hours of operation at each diesel engine as measured by a non-resettable hour meter. The monthly records shall be summed for the previous twelve months. Hours of operation for each engine for any of these rolling twelve month periods in excess of the specified limits shall be considered a violation of this condition.

This condition is federally-enforceable pursuant to Rule 35 for demonstrating compliance with the carbon monoxide and greenhouse gases Title V emission thresholds.

8. The three 6023 BHP GE Jenbacher natural gas engines shall be operated in compliance with the following emission limits:

   a) The emissions of nitrogen oxides (NOx as nitrogen dioxide) from each engine shall not exceed 5 ppmv on a dry basis, corrected to 15% oxygen. This emission limit is applied as BACT (Best Available Control Technology) and is more stringent than the Rule 74.9.B.1 NOx emission limit for lean-burn engines.
   b) The emissions of reactive organic compounds (ROCs) from each engine shall not exceed 16 ppmv on a dry basis, corrected to 15% oxygen, measured as methane. This emission limit is applied as BACT and is more stringent than the Rule 74.9.B.1 ROC limit for lean-burn engines.
   c) The emissions of carbon monoxide (CO) from each engine shall not exceed 80 ppmv on a dry basis, corrected to 15% oxygen. This limit is more stringent than Rule 74.9.B.1 and is a federally enforceable emission limit pursuant to Rule 35, "Elective Emission Limits".
   d) The emissions of ammonia (NH3) from each engine shall not exceed 10 ppmv on a dry basis, corrected to 15% oxygen. This emission limit is applied as BACT and is more stringent than the Rule 74.9.B.3 NH3 limit for lean-burn engines.

   In order to comply with this condition, the permittee shall have each engine's emissions tested within 90 days of each engine start-up, as required below. After the initial test, each engine shall be source tested biennially (no less than once every 24 months) as required by Rule 74.9.

   In addition, each engine shall be equipped and operated with a device to continuously monitor and record the urea injection rate and the gaseous inlet temperature to the SCR unit. Adequate source testing ports, inlet gas sampling ports, and source testing facilities shall be installed at each engine.

9. Within 90 days of starting operation, an initial source test shall be conducted on each engine to demonstrate compliance with the emission limits of this Authority to Construct. Testing shall be performed by an independent testing contractor at the engine's expected maximum operating load in accordance with Rule 74.9.G, which includes California ARB Method 100 for oxides of nitrogen, carbon monoxide, and stack gas oxygen; EPA Method 18 or 25 for

reactive organic compounds; and BAAQMD Method ST-1B for ammonia.

A source test protocol shall be submitted for District approval prior to performing the test. The District shall be notified at least five working days prior to the test and the test schedule shall be reconfirmed one day in advance of the planned test. Within 45 days after this initial source test, a report of the results shall be submitted to the District Engineering Division. The test report shall indicate the emissions of NOx, ROC, CO, and NH3 in parts per million by volume on a dry basis referenced at 15% oxygen, and in pounds per hour. The urea injection rate and SCR Unit inlet temperature shall be measured and recorded during each test of each engine and reported with the test report. If applicable, the air to fuel ratio setting as indicated by the engine's air to fuel ratio controller shall also be recorded and reported with the test report.

10. The three 6023 BHP GE Jenbacher engines shall be fired on Public Utilities Commission-regulated natural gas only. Records shall be maintained to substantiate that this is the type of fuel used.

11. The three 6023 BHP GE Jenbacher engines shall be operated in compliance with all applicable sections of Rule 74.9, "Stationary Internal Combustion Engines". This includes, but is not limited to, the following permit conditions.

12. Pursuant to Rule 74.9.C, the permittee shall maintain a District approved Engine Operator Inspection Plan. The plan shall include a specific emission inspection procedure to assure that an engine is operated in continual compliance with the provisions of Rule 74.9. At a minimum, inspections shall be conducted quarterly unless the engine operated less than 32 hours in each of the three months of the applicable quarter, as measured by a non-resettable elapsed operating hour meter.

    Pursuant to Rule 74.9.B.5, a screening analysis of NOx and CO emissions shall be performed quarterly unless the biennial source test specified in Subsection B.4 is required, or the engine operated less than 32 hours in each of the three months of the applicable quarter, as measured by a non-resettable elapsed operating hour meter. The screening analyses shall be performed using a portable analyzer either verified by the Environmental Protection Agency or approved in writing by the APCO. The portable analyzer shall be calibrated, maintained and operated in accordance with the recommendations of the manufacturer.

13. Pursuant to Rule 74.9.E, Recordkeeping Requirements, the permittee shall maintain an inspection log for each engine containing, at a minimum, the following data:

    a) Identification and location of each engine subject to Rule 74.9.

b) Date and results of each screening analysis and inspection and a summary of any emissions corrective maintenance action taken.

c) Any additional information required by the Engine Operator Inspection Plan.

d) For each engine exempt from quarterly screening analysis pursuant to Subsection B.5.b of Rule 74.9 and inspection pursuant to subsection C.4, total hours of operation shall be recorded monthly. Records shall be maintained for a period of 2 years after the date of each entry.

The permittee shall maintain the inspection log for a period of 2 years after the date of each entry. The log shall be made available for inspection by the District upon request.

14. Pursuant to Rule 74.9.F, Reporting Requirements, within 45 days of the end date of each permit renewal period, the operator of a permitted engine subject to the provisions of the rule shall provide the District with the following information:

a) Engine manufacturer, model number, operator identification number and location of each engine.

b) A summary of maintenance reports during the renewal period, including quarterly screening data if applicable.

For each engine exempt pursuant to Subsection D.2, total annual operating hours shall be reported annually. For each engine exempt pursuant to subsection D.3, total annual hours of maintenance operaton shall be reported annually. Reports shall be provided to the District after every calendar year by February 15.

15. The 6023 BHP GE Jenbacher lean burn, 4 stroke, natural gas fired (spark ignited) engines shall comply with all applicable requirements of 40 CFR Part 60, Standards of Performance For New Stationary Sources, Subpart JJJJ, Standards of Performance for Stationary Spark Ignition Internal Combustion Engines. In addition, these engines shall comply with all applicable requirements of 40 CFR Part 63, Subpart ZZZZ, National Emission Standards for Hazardous Air Pollutants for Reciprocating Internal Combustion Engines (RICE NESHAP).

16. The four Saskatoon Boilers shall comply with APCD Rule 74.15, "Boilers, Steam Generators, and Process Heaters". This includes, but is not limited to, the following permit conditions.

17. Four Saskatoon Boiler Emission Limits and Testing:

a) Oxides of nitrogen (NOx measured as NO2) emissions shall not exceed 40 ppmvd, corrected to 3% oxygen, while burning natural gas. This limitation is applied for Rule 74.15.B.1 compliance.

b) Carbon monoxide (CO) emissions shall not exceed 250 ppmvd, corrected to 3% oxygen, while burning natural gas. This limitation is federally-enforceable pursuant to Rule 35 for demonstrating compliance with the carbon monoxide Title V theshold. This limitation is more stringent than Rule 74.15.

In order to comply with this condition, the permittee shall have each unit's emissions tested no less than once every 24 months, pursuant to Rule 74.15. Testing shall be performed by an independent testing contractor at the unit's expected maximum operating load in accordance with APCD Rule 74.15.E, which includes California ARB Method 100 for oxides of nitrogen, carbon monoxide, and stack gas oxygen.

Prior to conducting any emissions test associated with the required biennial compliance detemination, the permittee shall notify the APCD Compliance Division. Written notification shall be received no less than 15 calendar days prior to the test. The emissions test report and results shall be submitted to the APCD Compliance Division within 45 days after the test.

18. The Saskatoon Boilers shall be fired on Public Utilities Commission-regulated natural gas only. Records shall be maintained to substantiate that this is the type of fuel used.

19. The three emergency electricity generating diesel engines are exempt from Sections B (Requirements), C (Engine Operator Inspection Plan), and E (Recordkeeping) of Rule 74.9, "Stationary Internal Combustion Engines", because they are used directly and exclusively for agricultural operations. (Rule 74.9.D.5)

These three emergency electrcity generating engines shall comply with Rule 250, "Registration of Agricultural Engines", and the California ARB Airborne Toxic Control Measure (ATCM) for Stationary Compression Ignition Engines.

The following Condition Nos. 20 to 24 specifically apply to the 73 BHP Clarke Detroit Diesel-Allision Diesel Engine that is used to power the fire water pump.

20. Annual hours of operation for maintenance and testing of each emergency engine shall not exceed 20 hours per year. This limit does not include emergency operation when electrical line service has failed. When not being operated for maintenance or testing, the emergency engine shall only be used during a failure or loss of all or part of normal electrical power service to the facility. This condition is applied pursuant to the California ARB Airborne Toxic Control Measure (ATCM) for Stationary Compression Ignition Engines.

In order to comply with this condition, the engine shall be equipped with a non-resettable hour meter and the permittee shall maintain a log that differentiates operation during maintenance and

testing from emergency operation. These records shall be compiled into a monthly total. The monthly operating hour records shall be summed for the previous 12 months. Total operating hours for any of these 12 month periods, excluding emergency operation, in excess of the specified annual limit shall be considered a violation of this condition.

21. The emergency diesel engine(s) shall be operated in compliance with all applicable requirements of the California ARB Airborne Toxic Control Measure (ATCM) for Stationary Compression Ignition Engines, Section 93115 through 93115.15, Title 17, California Code of Regulations. This includes, but is not limited to, the following permit conditions.

22. Pursuant to Section 93115.5(b) of the ATCM for Stationary Compression Ignition Engines, effective January 1, 2006, no owner or operator of an in-use emergency standby stationary diesel-fueled engine shall add to the engine or any fuel tank directly attached to the engine any fuel unless the fuel is CARB diesel fuel or another fuel that meets the requirements of Section 93115.5(b) of the ATCM.

23. Pursuant to Rule 74.9.D.3, an emergency engine is exempt from Rule 74.9, "Stationary Internal Combustion Engines", provided that it is operated during either an emergency or maintenance operation. Maintenance operation is limited to 50 hours per calendar year and is defined as "the use of an emergency standby engine and fuel system during testing, repair, and routine maintenance to verify its readiness for emergency standby use".

24. A log of engine operation for the emergency engine shall be maintained based on readings from a non-resettable hour meter. The log shall differentiate operation during maintenance and testing from operation during an emergency. The hours of operation shall be totaled on a monthly basis and shall be summed for the previous 12 months.

    This data shall be maintained for a minimum of two (2) years from the date of each entry and shall be made available to the APCD upon request.

25. The permittee shall maintain the following records:

    a) Monthly and rolling twelve month records of natural gas consumption for each of the three 6023 BHP GE Jenbacher natural gas engines.
    b) Records of the urea injection rate and SCR Unit inlet temperature for each of the three 6023 BHP GE Jenbacher natural gas engines.
    c) Monthly and rolling twelve month records of natural gas consumption for the combined use of the four Saskatoon boilers.
    d) Monthly and rolling twelve month records of hours of operation for each of the four emergency diesel engines.

e) Source test records and records required by Rule 74.9 for the three 6023 BHP GE Jenbacher natural gas engines.
f) Records and reports required by NSPS JJJJ and NESHAP ZZZZ for the three 6023 BHP GE Jenbacher natural gas engines.
g) Source test records for the four Saskatoon boilers.
h) Annual report of actual NOx emissions for the four boilers and three emergency electricity generating diesel engines to document compliance with the permit exemption of Rule 23.J.16.

These records shall be maintained at the stationary source for at least two years and shall be made available to District personnel upon request.

Prior to operation of equipment listed on this Authority to Construct, the permittee shall submit a Permit to Operate application (Rule 10).

This Authority to Construct shall expire and shall be cancelled two years from the date of issuance unless an extension has been approved in writing by the District (Rule 10).

Within 30 days after receipt of this permit, the permittee may petition the Hearing Board to review any new or modified condition (Rule 22). This permit, or a copy, shall be posted reasonably close to the subject equipment and shall be accessible to inspection personnel (Rule 19).

The granting of this Authority to Construct shall not be construed as an endorsement by the District and shall not guarantee compliance with the rules of the District.

Terri Thomas
Engineering Division

For:

Michael Villegas
Air Pollution Control Officer

VENTURA COUNTY AIR POLLUTION CONTROL DISTRICT
669 County Square Drive, Ventura CA 93003 805/ 645-1401 FAX 805/ 645-1444 www.vcapcd.org

APPLICATION PACKAGE FOR PERMIT TO OPERATE AUTHORITY TO CONSTRUCT PREVIOUSLY ISSUED

Rule 10.B of the Air Pollution Control District (APCD) Rules requires that any person operating any facility that may emit air contaminants shall apply for and obtain an APCD Permit to Operate. Failure to obtain the necessary permits may result in late fees (Rule 42.F) and/or civil penalties (California Health and Safety Code Section 42402).

To obtain a Permit to Operate after construction or installation, complete the appropriate forms described below. Submit all forms and other required information with a filing fee of $450. ***Make all checks payable to the Ventura County APCD.*** If additional permit processing fees are required, you will be billed upon completion of the District's review of your application.

All information in a permit application is public information except for information entitled to confidential treatment as a trade secret. The Authority to Construct and Permit to Operate will also be public information. If you believe that any part of your application is a trade secret, please clearly label it as such. You must also submit written justification to support your claim of confidentiality. Please refer to District Regulation IX, Rules 200 - 204 when preparing your justification. In no case can emission data be considered trade secrets. In addition, the contents of the Authority to Construct or Permit to Operate are not entitled to protection as trade secrets.

Each application must contain, at a minimum, the following:

Permit Application Form (Form App002) - An application cover form summarizing the application . The number of the Authority to Construct that was previously issued for this equipment or project must be indicated on the form. If an Authority to Construct was not issued for this project, you need to complete Form App001.

Installed Equipment - If the applicant checks the box that states "All equipment was installed and will be operated in conformance with the requirements of the Authority to Construct", the District shall issue a Temporary Permit to Operate within 30 days of the receipt of a completed application. (Rule 14.B.2)

If the applicant checks the box that states "A description of all the differences between the equipment as constructed and the requirements of the Authority to Construct is attached", the District shall assess the differences to determine if the differences will affect the ability of the source to operate in compliance. Based on this assessment, the District shall issue a Temporary Permit to Operate or shall deny the application for a Permit to Operate and require an application for Authority to Construct. (Rule 14.B.2) If the application for Permit to Operate is accepted, fees shall be assessed for the time required to process the revision.

If you have any questions on what constitutes a substantial difference for your equipment, please contact the Engineering Section at 805/645-1401.

I:\ENG\Application Forms\Basic Forms\ttPTO2-Application Instructions.doc

VENTURA COUNTY AIR POLLUTION CONTROL DISTRICT

669 County Square Drive, Ventura CA 93003 805/ 645-1401 FAX 805/ 645-1444 www.vcapcd.org

PERMIT APPLICATION FORM - AUTHORITY TO CONSTRUCT ISSUED

IMPORTANT: Include all of the following when submitting this application.

✓ **Appropriate Fee** ✓ **Signature on Application**

Failure to adhere to the instructions outlined by the District could result in the application being returned as incomplete. Knowingly submitting false information in this application is a misdemeanor punishable by a fine of up to $25,000 (Rule 12.D and H&SC 42400.2(c)).

Authority to Construct Number	0 - 0

Please specify the legal name and address of the person, partnership, company, corporation or agency to be named on the permit. All permits and billings will be mailed to the first address below.

Organization Type	☐ Corporation ☐ Partnership ☐ Individual Owner ☐ Government Agency		
Organization Name			
Mailing Address			
City, State Zip			
Contact Person		Title	
Phone Number		FAX Number	

Please specify the facility name, street address, and phone number where the equipment has been installed.

Facility Name			
Facility Address			
City, State Zip			
Contact Person		Title	
Phone Number		FAX Number	

Please check the appropriate box below

All equipment was installed and will be operated in conformance with the requirements of the Authority to Construct	☐ Yes
A description of all the differences between the equipment as constructed and the requirements of the Authority to Construct is attached.	☐ Yes

I hereby certify that the equipment which is the subject of this application can be expected to comply with all applicable rules. I hereby certify that all information provided on this application is true and correct. I agree to pay any and all fees required by District rules for processing this application and for issuance of the Permit to Operate. If I withdraw my application or should my application be disapproved, I agree that the obligation exists to compensate the District for time spent processing my application.

Signature of responsible official, partner, or sole proprietor (not a consultant or contractor) Original Signature Required/No Photocopies	
Print Name	
Organization or Company Name	
Date	

DISTRICT USE ONLY

Amount Paid: $_____ Date Received: _____ Receipt No.: _____

Ventura County
Air Pollution
Control District

669 County Square Drive
Ventura, California 93003

tel 805/645-1400
fax 805/645-1444
www.vcapcd.org

Michael Villegas
Air Pollution Control Officer

Your Opinion is Valuable

Permit Processing Survey

The Ventura County Air Pollution Control District is conducting this survey to evaluate and find ways we can improve our service. Please take a few minutes and let us know how we're doing. Your input will help us provide you with the quality of service you deserve. Please note these survey forms are sent directly to my office. This has been done to ensure I review your response and comments. Please check the most appropriate box on a scale from poor (on the left) to excellent (on the right). If the question does not apply to your application, mark the "not applicable" box.

		Poor			Excellent		N/A
1.	How understandable were the rules pertaining to this equipment?	☐	☐	☐	☐	☐	☐
2.	How clear were the instructions accompanying the application form?	☐	☐	☐	☐	☐	☐
3.	Were your questions answered satisfactorily?	☐	☐	☐	☐	☐	☐
4.	How promptly were your phone calls returned?	☐	☐	☐	☐	☐	☐
5.	Were the communications with engineering staff adequate during phone conversations?	☐	☐	☐	☐	☐	☐
6.	Were the communications with engineering staff adequate during face-to-face conversations?	☐	☐	☐	☐	☐	☐
7.	Was the Engineering staff's explanation of the rule requirements understandable?	☐	☐	☐	☐	☐	☐
8.	Overall how knowledgeable was the engineering staff about the equipment and/or the process covered by your permit application?	☐	☐	☐	☐	☐	☐
9.	Was the engineering evaluation conducted in a professional manner?	☐	☐	☐	☐	☐	☐
10.	Are the conditions listed on your permit understandable?	☐	☐	☐	☐	☐	☐

Would you like a manager to call? **Yes** ☐ **No** ☐

If yes, provide your name and phone number below. Your request will be handled promptly.

Name:_____ Phone:_____

Comments:

Thank you for your time in filling out this survey. Please fold, staple, and mail to the APCD.

Sincerely,

Michael Villegas
Air Pollution Control Officer

M:/Clerical/AdminForms/EngrOpinion

Engineering Manager review_____Data Input_____APCO_____Application No. 08132710

printed on recycled paper

Ventura County
Air Pollution
Control District

669 County Square Drive
Ventura, California 93003

tel 805/645-1400
fax 805/645-1444
www.vcapcd.org

Michael Villegas
Air Pollution Control Officer

November 15, 2011

Mr. Gerardo Rios, Chief
Permits Office (AIR-3)
Office of Air Division
EPA Region IX
75 Hawthorne Street
San Francisco, CA 94105-3901

Subject: Authority to Construct Application No. 08132-100

Dear Mr. Rios:

The Ventura County Air Pollution Control District hereby provides, pursuant to Rule 35.C.4.c, a copy of a final VCAPCD Authority to Construct issued to the following company:

Company Name	Application No.
Houwelings's Nurseries Oxnard, Inc.	08132-100

This permit contains federally enforceable conditions in accordance with District Rule 35, "Elective Emission Limits". The proposed permit, engineering analysis of the permit application, and a copy of the public notice that appeared in the local newspaper were forwarded to the EPA for review on September 15, 2011. No written comments were received from EPA or the public on the notice of the proposed permit. At the permit applicant's request there has been a reduction in the annual operating hours for the emergency diesel engines listed on the permit.

If you have any questions, or wish to discuss this matter in further detail, please call me at 805/645-1421.

Sincerely,

Kerby E. Zozula, Manager
Engineering Division

Enclosures

c: Houweling's Nurseries Oxnard, Inc. (w/o enclosure)

M:\Public Notice\FESOP\EPALTR-08132-100F.doc

Yorke
ENGINEERING, LLC
www.YorkeEngr.com

August 25, 2014

Mr. William Knox
California Air Resources Board
Climate Change Program Evaluation Branch, 6th Floor
1001 "I" Street
Sacramento, CA 95814

Subject: Application for Limited Exemption of Emissions from Qualified Thermal Output for Cogeneration Facilities for Houweling Nurseries Oxnard, Inc. (Facility ARB ID 104364)

Dear Mr. Knox:

On behalf of Houweling Nurseries Oxnard, Inc (Houweling), we are submitting an application for the Cap-and-Trade Limited Exemption of Emissions from Qualified Thermal Output for Cogeneration Facilities (Section 95852(j)). This application is submitted for Houweling's facility in Camarillo, CA (Facility ARB ID 104364). As we understand, a facility that qualifies for the limited exemption under Section 95852(j) will not be a covered entity during the first, second, and third compliance periods, as long as the facility meets the requirements for the exemption.

Houweling started the operation of their cogeneration units in 2012, and was only operating their cogeneration units for partial year. 2013 is the first year that Houweling operated their cogeneration units for a full year and exceeded the Cap-and-Trade applicability threshold of 25,000 $MTCO_2e$. As shown in the attached completed application form, the Houweling facility meets the requirements for the limited exemption set forth in Section 95852(j) of the Cap-and-Trade Regulation for 2012 and 2013. Therefore, we request for the limited exemption, as allowed by the Cap-and-Trade Regulation, be granted to Houweling facility in Camarillo.

Should you have any questions or concerns, please contact me at (559) 908-6979.

Sincerely,

Carla Jo

Carla Prasetyo Jo, PE
Yorke Engineering, LLC
(559) 908-6979

cc: Joseph Steirer, Yorke Engineering, LLC

Enclosures:

1. One Application form for Limited Exemption of Emissions from Qualified Thermal Output for Cogeneration Facilities

California Air Resources Board

Application for Limited Exemption of Emissions from Qualified Thermal Output for Cogeneration Facilities

California Air Resources Board
Attn: William Knox
CCPEB, 6th Floor
1001 "I" Street
Sacramento, CA 95814

1) Legal Entity Name	2) Mailing Address	3) ARB ID #	4) CITSS Account ID # (CA + 4 digits)
Houweling Nurseries Oxnard, Inc	645 W. Laguna Road, Camarillo, CA 93012	104364	CA1740

Qualified Thermal Output by Use

	Thermal Energy Used on Site or Sold?	On-Site Use Category	5) NAICS Code(s) of Use, if Applicable (Optional)	6) Thermal Output Supports or is Part of Cogeneration or Electricity System?	7) Qualified Thermal Output (MMBtu)						8) Discussion of any Differences from Previous Reporting
					2008	2009	2010	2011	2012	2013	
1	Used on Site	Industrial Processes or Operations	111419	Yes	-	-	-	-	29,418	167,628	Not Applicable
2	Used on Site	Heating Operations									
3	Used on Site	Cooling Operations									
4	Sold										

9) Cogeneration Unit Burns some Fuel without Covered Emissions?	No						
10) Cogeneration Fuel that Produces Covered Emissions (MMBtu)							
11)Total Cogeneration Fuel (MMBtu)							
Covered Fuel Ratio	100%	100%	100%	100%	100%	100%	
Annual QTO (MMBtu)	-	-	-	-	29,418	167,628	
GHG Emissions of QTO	-	-	-	-	1,837	10,467	
12) Total Covered Emissions (metric tons CO_2e)					24,411	29,355	
Total Remaining Covered Emissions	-	-	-	-	22,574	18,888	
Emissions Under Threshold All Years?	Yes						

13) I certify under penalty of perjury of the laws of the State of California that I am duly authorized by the legal entity named in box 1 above to sign this attestation on behalf of said legal entity, and that the information submitted herein is true, accurate, and complete.

Richard Vanderlaan
Print Name

Signature

8-25-2014
Date

POWER PURCHASE AND SALE AGREEMENT

between

SOUTHERN CALIFORNIA EDISON COMPANY

and

HOUWELING NURSERIES OXNARD, INC.

(ID #2847)

Standard Contract for Eligible CHP Facilities

TABLE OF CONTENTS

PREAMBLE 1
RECITALS 1
ARTICLE ONE: SPECIAL CONDITIONS 2
1.01 TERM 2
1.02 GENERATING FACILITY 2
1.03 DELIVERY POINT 3
1.04 PLANNED OUTAGES 3
1.05 POWER PRODUCT PRICES 3
1.06 CREDIT AND COLLATERAL REQUIREMENTS 4
1.07 SCHEDULING COORDINATOR 4
1.08 GHG EMISSIONS COMPLIANCE COSTS 4
ARTICLE TWO: SELLER'S SATISFACTION OF OBLIGATIONS BEFORE THE TERM START DATE; TERMINATION 6
2.01 SELLER'S SATISFACTION OF OBLIGATIONS BEFORE THE TERM START DATE 6
2.02 TERMINATION RIGHTS OF THE PARTIES 7
2.03 RIGHTS AND OBLIGATIONS SURVIVING TERMINATION 7
ARTICLE THREE: SELLER'S OBLIGATIONS 9
3.01 CONVEYANCE OF THE POWER PRODUCT AND RELATED PRODUCTS; RETAINED BENEFITS 9
3.02 RESOURCE ADEQUACY RULINGS 10
3.03 GHG EMISSIONS COMPLIANCE COSTS 11
3.04 SITE CONTROL 13
3.05 PERMITS 13
3.06 TRANSMISSION 13
3.07 CAISO RELATIONSHIP 14
3.08 GENERATING FACILITY MODIFICATIONS 14
3.09 METERING 14
3.10 TELEMETRY SYSTEM 16
3.11 PROVISION OF INFORMATION 16
3.12 PROGRESS REPORTING 17
3.13 FUEL SUPPLY 17
3.14 OPERATION AND RECORD KEEPING 17
3.15 POWER PRODUCT CURTAILMENTS AT TRANSMISSION PROVIDER'S OR CAISO'S REQUEST 18
3.16 REPORT OF LOST OUTPUT 19
3.17 ELIGIBLE CHP FACILITY STATUS 19
3.18 NOTICE OF CESSATION OR TERMINATION OF SERVICE AGREEMENTS 19
3.19 BUYER'S ACCESS RIGHTS 20
3.20 SELLER FINANCIAL INFORMATION 20
3.21 NERC ELECTRIC SYSTEM RELIABILITY STANDARDS 22
3.22 ALLOCATION OF AVAILABILITY INCENTIVE PAYMENTS

AND NON-AVAILABILITY CHARGES 23
ARTICLE FOUR: BUYER'S OBLIGATIONS 24
4.01 OBLIGATION TO PAY 24
4.02 PAYMENT ADJUSTMENTS 24
4.03 PAYMENT STATEMENT AND PAYMENT 25
4.04 NO REPRESENTATION BY BUYER 27
4.05 BUYER'S RESPONSIBILITY 28
4.06 BUYER AS SCHEDULING COORDINATOR 28
ARTICLE FIVE: FORCE MAJEURE 29
5.01 NO DEFAULT FOR FORCE MAJEURE 29
5.02 REQUIREMENTS APPLICABLE TO THE CLAIMING PARTY 29
5.03 TERMINATION 29
ARTICLE SIX: EVENTS OF DEFAULT; REMEDIES 30
6.01 EVENTS OF DEFAULT 30
6.02 EARLY TERMINATION 34
6.03 TERMINATION PAYMENT 34
ARTICLE SEVEN: LIMITATIONS OF LIABILITIES 35
ARTICLE EIGHT: GOVERNMENTAL CHARGES 37
8.01 COOPERATION TO MINIMIZE TAX LIABILITIES 37
8.02 GOVERNMENTAL CHARGES 37
8.03 PROVIDING INFORMATION TO TAXING GOVERNMENTAL AUTHORITIES 37
ARTICLE NINE: MISCELLANEOUS 38
9.01 REPRESENTATIONS AND WARRANTIES 38
9.02 ADDITIONAL REPRESENTATIONS, WARRANTIES, AND COVENANTS BY SELLER 38
9.03 INDEMNITY 39
9.04 ASSIGNMENT 41
9.05 CONSENT TO COLLATERAL ASSIGNMENT 41
9.06 GOVERNING LAW AND JURY TRIAL WAIVER 44
9.07 NOTICES 44
9.08 GENERAL 45
9.09 CONFIDENTIALITY 46
9.10 INSURANCE 48
9.11 NONDEDICATION 49
9.12 MOBILE SIERRA 50
9.13 SELLER OWNERSHIP AND CONTROL OF GENERATING FACILITY 50
9.14 SIMPLE INTEREST PAYMENTS 50
9.15 PAYMENTS 50
9.16 PROVISIONAL RELIEF 50
ARTICLE TEN: DISPUTE RESOLUTION 52
10.01 DISPUTE RESOLUTION 52
10.02 MEDIATION 52
10.03 ARBITRATION 52

SIGNATURES.....55

LIST OF EXHIBITS

A. Definitions

B. Generating Facility and Site Description

C. Monthly Contract Payment Calculation

D. Credit and Collateral Requirements

E. Scheduling Coordinator Services

F. Milestone Progress Reporting Form

G. Seller's Forecasting Submittal and Accuracy Requirements

H. CAISO Charges

I. Scheduling and Delivery Deviation Adjustments

J. Notice List

K. Form of Guaranty Agreement

L. Form of Letter of Credit

M. Seller's Milestone Schedule

N. Outage Schedule Submittal Requirements

POWER PURCHASE AND SALE AGREEMENT

between

SOUTHERN CALIFORNIA EDISON COMPANY

and

HOUWELING NURSERIES OXNARD, INC.

(ID# 2847)

PREAMBLE

This Power Purchase and Sale Agreement by and between **Southern California Edison Company**, a California corporation ("Buyer"), and **Houweling Nurseries Oxnard, Inc.**, a California corporation ("Seller"), together with the exhibits, attachments, and any applicable referenced collateral agreement between the Parties (collectively, this "Agreement"), is made, effective and binding as of October 28, 2013 (the "Effective Date").

Buyer and Seller are sometimes referred to in this Agreement individually as a "Party" and jointly as the "Parties." Unless the context otherwise specifies or requires, initially capitalized terms used in this Agreement have the meanings set forth in Exhibit A.

RECITALS

A. On June 26, 2008, the CPUC opened Rulemaking 08-06-024 to implement the provisions of Assembly Bill 1613 (codified in California Public Utilities Code Section 2840 et. seq.), which establishes the Waste Heat and Carbon Emissions Reductions Act (the "Act").

B. Buyer is required to offer this Agreement to Seller in order to fulfill Buyer's obligations under the Act and CPUC Decisions 09-12-042 (as modified by CPUC Decisions 10-04-055, 10-12-055, and 11-04-033), and Seller desires to accept such offer and enter into this Agreement.

The Parties, intending to be legally bound, agree as follows:

ARTICLE ONE. SPECIAL CONDITIONS

1.01 Term. The term of this Agreement (the "Term") commences on November 1, 2013 (the "Term Start Date") and ends 120 months after the Term Start Date (the "Term End Date").

(a) The Term Start Date must be on the first day of a calendar month.

(b) Seller may change the Term Start Date set forth in this Section 1.01 by providing Notice to Buyer at least one year before such Term Start Date; *provided*, *however*, that notwithstanding any change to the Term Start Date, the Term may not exceed 120 months; *provided further*, that if the Generating Facility is (i) a New Eligible CHP Facility, the Term Start Date must occur within 60 months of the Effective Date, or (ii) an Existing Eligible CHP Facility, the Term Start Date must occur within 24 months of the Effective Date, in each case subject to any extension of the Term Start Date as a result of a Force Majeure as to which Seller is the Claiming Party (subject to Section 5.03) and Section 4(c)(ii) of Exhibit D.

(c) The Term shall be no less than one (1) year and no more than ten (10) years. Seller designates the Term Start Date and the Term End Date.

1.02 Generating Facility.

(a) Name. The name of the Generating Facility is Houweling Nurseries Oxnard, Inc, which is an Existing Eligible CHP Facility.

(b) Location. The Generating Facility is located at 645 W. Laguna Road, Camarillo, CA 93012, and is further described in Exhibit B.

(c) Contract Capacity. The As-Available Contract Capacity is 12,711 kW. The Power Rating of the Generating Facility must be less than or equal to 20 MW. If the Generating Facility has more than one Generating Unit, the Power Rating of all such Generating Units must be less than or equal to 20 MW.

(d) Expected Term Year Energy Production. The Expected Term Year Energy Production for each Term Year equals 60,374,509 kWh. The Expected Term Year Energy Production may be revised based on changes in the Site Host Load or the Site Host thermal requirements; *provided*, *however*, that such change must be supported by a certification from a California-licensed professional engineer qualified to make a representation affirming that such revision is reasonable and based on changes in the Site Host Load or the Site Host thermal requirements. Such certification must include all data relied on to support the revised Expected Term Year Energy Production.

(e) Site Host Load. The Site Host Load is expected to equal, on average, 7,564 kW annually. The amount of electric energy to be used to serve the Site Host Load is expected to equal, on average, 28,011,333 kWh per Term Year.

1.03 Delivery Point. The delivery point is the point where Seller's facilities connect with facilities owned by Buyer (the "Delivery Point"). Seller shall convey to Buyer and Buyer shall accept all the As-Available Contract Capacity and associated electric energy from the Generating Facility at the Delivery Point. Title to and risk of loss related to the Power Product shall transfer from Seller to Buyer at the Delivery Point. Buyer shall pay any transmission or distribution costs to deliver the power from the Generating Facility's bus bar to the point of interconnection of the Generating Facility to the CAISO-Controlled Grid (the "Interconnection Point"). Seller shall be responsible for interconnection costs, including necessary facility upgrades (consistent with Applicable Laws and the Interconnection Agreement), and line losses from the Delivery Point to the Interconnection Point. Line losses attributable to Seller, if any, shall be determined as part of the Interconnection Study.

1.04 Planned Outages. All Planned Outages must be scheduled by Seller in accordance with the procedures set forth in Exhibit N. Seller shall make reasonable efforts not to schedule a Planned Outage during the Peak Months. Should it become necessary for Seller to schedule a Planned Outage during the Peak Months, Seller shall only schedule such Planned Outage during the non-peak hours of the Peak Months. In no event may Seller schedule or utilize a Planned Outage that is more than 12 non-peak hours per Peak Month.

1.05 Power Product Prices.

(a) If, as of the Term Start Date, the Generating Facility is interconnected pursuant to a non-FERC jurisdictional interconnection tariff, then the Monthly Contract Payment for the Power Product shall be determined pursuant to Exhibit C to this Agreement.

(b) If, as of the Term Start Date, the Generating Facility is interconnected pursuant to a WDAT or the CAISO Tariff, and Seller is able to commence the Term Start Date and begin energy deliveries, but is not yet able to provide Resource Adequacy Benefits in compliance with all CPUC and CAISO requirements, then, the Monthly Contract Payment for the Power Product shall be determined in accordance with the Applicable QF 20MW Settlement Contract Payment Provisions with Seller being paid the short run avoided cost rate for energy and as-available capacity applicable under the Applicable QF 20MW Settlement Contract Payment Provisions until the first day of the month following the date that Seller notifies Buyer that the Generating Facility is able to be counted for resource adequacy purposes and is able to provide Resource Adequacy Benefits in compliance with all CPUC and CAISO requirements, at which time the Monthly Contract Payment for the Power Product shall be determined pursuant to Exhibit C of this Agreement. Seller acknowledges and agrees that so long as the Monthly Contract Payment is determined in accordance with the Applicable QF 20MW Settlement Contract Payment Provisions, Seller shall be obligated to comply with and be bound by all such

Applicable QF 20MW Settlement Contract Payment Provisions and such Applicable QF 20MW Settlement Contract Payment Provisions shall be deemed to be terms of this Agreement. Seller agrees to notify Buyer when Seller is able to have the Generating Facility counted for resource adequacy purposes and provide Resource Adequacy Benefits in compliance with all CPUC and CAISO requirements within five (5) Business Days of the occurrence thereof. Notwithstanding anything to the contrary in this Agreement, if during an applicable QF Settlement Contract Payment Period any payment is required under the provisions of this Agreement which is duplicative of any payment required under the QF 20MW Settlement Contract, the payment shall be calculated and determined in accordance with the QF 20MW Settlement Contract.

1.06 Credit and Collateral Requirements.

(a) Seller shall post and thereafter maintain the Development Security in accordance with Section 4(b) of Exhibit D.

(b) Seller shall post and thereafter maintain the Performance Assurance, in accordance with Section 2(a) of Exhibit D, in an amount equal to 5% of expected revenue of the Generating Facility under this Agreement (the "Performance Assurance Amount"). The initial amount of Performance Assurance equals $2,200,000. The Performance Assurance Amount will be revised upon any change to the Expected Term Year Energy Production.

(c) Seller shall comply with all of the provisions of Exhibit D.

(d) Seller's Guarantor, if any, is: Not Applicable.

(e) Guarantor shall guarantee $: Not Applicable.

(f) The Cross Default Amount, if any, equals $: Not Applicable.

1.07 Scheduling Coordinator. Buyer is the Scheduling Coordinator under this Agreement.

1.08 GHG Emissions Compliance Costs.

(a) Provided that this Section 1.08 shall not be applicable during or with respect to any QF Settlement Contract Payment Period applicable under this Agreement, Buyer shall reimburse Seller for Direct GHG Compliance Costs (other than GHG Emissions Allowances) in accordance with and subject to Section 3.03(a).

(b) During the Term, other than any portion of the Term which constitutes an applicable QF Settlement Contract Payment Period applicable under this Agreement, with respect to payment for GHG Emissions Allowances, Seller elects (check one box only):

__X__ To manage its own GHG Emissions Allowances and request reimbursement from Buyer for such GHG Emissions Allowances in

accordance with and subject to the requirements of Sections 3.03(b) and (c); or

_____ To have Buyer purchase GHG Emissions Allowances on behalf of Seller upon the CPUC's issuance of guidelines on the mechanics of Buyer's obligations to purchase GHG Emissions Allowances pursuant to CPUC Decision 09-12-042 (as modified by CPUC Decisions 10-04-055, 10-12-055, and 11-04-033). Until such time, Seller shall manage its own GHG Emissions Allowances and request reimbursement from Buyer for such GHG Emissions Allowances in accordance with and subject to the requirements of Sections 3.03(b) and (c).

**** End of Article One ****

ARTICLE TWO. SELLER'S SATISFACTION OF OBLIGATIONS BEFORE THE TERM START DATE; TERMINATION

2.01 Seller's Satisfaction of Obligations before the Term Start Date. Seller shall satisfy each of the following obligations before the Term Start Date:

(a) The Generating Facility is or becomes an Eligible CHP Facility;

(b) Seller enters into all agreements, obtains all Governmental Authority approvals and Permits, and takes all steps necessary for it to:

(i) Operate the Generating Facility;

(ii) Deliver electric energy from the Generating Facility to the Delivery Point; and

(iii) Have Buyer Schedule the electric energy produced by the Generating Facility with the CAISO;

(c) Seller satisfies its obligation to install the CAISO-Approved Meters, as set forth in Section 3.09(a);

(d) Seller furnishes to Buyer the insurance documents required under Section 9.10;

(e) Seller enters into all agreements required by the CAISO Tariff;

(f) Seller enters into and fulfills all of its obligations under (i) the applicable interconnection agreements with the applicable Transmission Provider that are required to enable Parallel Operation of the Generating Facility with the interconnected electric system and the CAISO-Controlled Grid, and (ii) any transmission, distribution or other service agreement that are required to enable Seller to transmit electric energy from the Generating Facility to the Delivery Point;

(g) Seller furnishes to Buyer the documents required under Section 3.06;

(h) Seller has posted with Buyer the Performance Assurance Amount;

(i) If the Generating Facility is PIRP eligible, then the Generating Facility is certified as a PIRP resource by the CAISO;

(j) If the Term is equal to or greater than five years, the Generating Facility meets the GHG EPS and, at any time upon Buyer's request, Seller provides to the CPUC documentation evidencing its compliance with the GHG EPS;

(k) Seller shall have taken all steps to ensure that Buyer is authorized as Scheduling Coordinator by the CAISO to Schedule the electric energy produced by the Generating Facility with the CAISO.

2.02 Termination Rights of the Parties.

(a) Termination Right of Seller. Seller has the right to terminate this Agreement if Seller (or any venture in which Seller is a participant) and the Generating Facility are jointly selected by Buyer in a competitive solicitation. The termination of this Agreement will be effective as of midnight the day before the commencement of any delivery period for any energy, capacity or attributes from the Generating Facility which is selected by Buyer in such competitive solicitation.

(b) Event of Default.

(i) In the event of an uncured Event of Default or an Event of Default for which there is no opportunity for cure permitted in this Agreement, the Non-Defaulting Party may, at its option, terminate this Agreement as set forth in Section 6.02 and, if the Non-Defaulting Party is Buyer, then Seller (or any entity over which Seller or any owner or manager of Seller exercises control) agrees to waive any right it may have under the Act to enter into any new agreement to sell energy, capacity or Related Products from the Generating Facility to Buyer or any other California investor-owned utility for a period of 365 days following the date of such termination. For purposes of this Section 2.02(b), "control" means the direct or indirect ownership of 20% or more of the outstanding capital stock or other equity interests having ordinary voting power.

(ii) If Buyer terminates this Agreement in accordance with Section 6.02 as result of an Event of Default by Seller under Section 6.01(c)(xvi) due to the Generating Facility being decertified from participation in the Assembly Bill 1613 program, then Seller shall have the right to enter into any applicable mandatory must-purchase contract available to "qualifying cogeneration facilities" (as contemplated in 18 CFR Part 292, Section 292.205) in California, but only to the extent that Seller and the Generating Facility are otherwise eligible for, and satisfy the conditions to enter into any such contract.

(c) End of Term. This Agreement automatically terminates at midnight of the Term End Date.

2.03 Rights and Obligations Surviving Termination. The rights and obligations of the Parties that are intended to survive a termination of this Agreement are all such rights and obligations that this Agreement expressly provides survive such termination as well as those rights and obligations arising from either Parties' covenants, agreements, representations or warranties applicable to, or to be performed, at, before or as a result of the termination of this Agreement, including:

(a) The obligation of Buyer to make all outstanding Monthly Contract Payments for periods before termination of this Agreement;

(b) The obligation of Buyer to invoice Seller for all payment adjustments for periods before termination of this Agreement, as set forth in Section 4.02;

(c) The obligation of Seller to pay any Buyer payment-adjustment invoice described in Section 4.03(b) for periods before termination of this Agreement within thirty (30) days of Seller's receipt of such invoice;

(d) The obligation to make a Termination Payment, as set forth in Section 6.03;

(e) The indemnity obligations, as set forth in Section 9.03;

(f) The obligation of confidentiality, as set forth in Section 9.09;

(g) The right to pursue remedies under Section 6.02(c);

(h) The limitation of damages under Article Seven; and

(i) The obligation of Seller to post Performance Assurance in accordance with Exhibit D.

**** End of Article Two ****

ARTICLE THREE. SELLER'S OBLIGATIONS

3.01 Conveyance of the Power Product and Related Products; Retained Benefits.

(a) Power Product. During the Term, Seller shall provide and convey the Power Product to Buyer in accordance with the terms of this Agreement, and Buyer shall have the exclusive right to the Power Product and all benefits derived therefrom, including the exclusive right to sell, convey, transfer, allocate, designate, award, report or otherwise provide any and all of the Power Product purchased under this Agreement and the right to all revenues generated from the use, sale or marketing of such Power Product.

(b) Green Attributes. Seller hereby agrees to provide and convey all Green Attributes associated with the Related Products as part of the Product being delivered during the Term. Seller represents and warrants that Seller holds the rights to all Green Attributes associated with the Related Products, and Seller agrees to convey and hereby conveys all such Green Attributes to Buyer as included in the delivery of the Product from the Project.

(c) Related Products. Seller hereby agrees to provide and convey to Buyer all Related Products during the Term. Seller represents and warrants that Seller holds the rights to all Related Products and Seller agrees to convey and hereby conveys all such Related Products to the Buyer. Buyer shall have the exclusive right to the Related Products and all benefits derived therefrom, including the exclusive right to sell, convey, transfer, allocate, designate, award, report or otherwise provide any and all of the Related Products purchased under this Agreement and the right to all revenues generated from the use, sale or marketing of such Related Products.

(d) Further Action by Seller. Seller shall, at its own cost, take all reasonable actions and execute all documents or instruments that are reasonable and necessary to effectuate the use of the Related Products for Buyer's benefit throughout the Term, which actions may include:

(i) Cooperating with the Governmental Authority responsible for resource adequacy administration to certify the Generating Facility for resource adequacy purposes;

(ii) Testing the Generating Facility as may be required to certify the Generating Facility for resource adequacy purposes in accordance with the requirements set forth in the CAISO Tariff or as otherwise agreed to by the Parties; and

(iii) Complying with Applicable Laws regarding the registration, transfer or ownership of Green Attributes associated with the Related Products, including, if applicable to the Generating Facility, participation in the

Western Renewable Energy Generation Information System or other process recognized under Applicable Laws.

(e) Retained Benefits. Seller shall retain for its own use or disposition all Financial Incentives and all attributes, benefits and credits associated with the Generating Facility and the electrical or thermal energy produced therefrom, other than the Power Product and the Related Products.

Notwithstanding anything to the contrary in this Agreement, as of the Effective Date and until the Term End Date, Seller may not use, provide or convey any of the Power Product and the Related Products to any Person other than Buyer (unless the FERC determines that a party holding a state jurisdictional interconnection agreement may sell Related Products to a Person other than Buyer).

3.02 Resource Adequacy Rulings. During the Term, Seller shall grant, pledge, assign and otherwise commit to Buyer the generating capacity of the Generating Facility associated with the Related Products in order for Buyer to use in meeting its resource adequacy obligations under any Resource Adequacy Ruling. Seller:

(a) Has not used, granted, pledged, assigned or otherwise committed any portion of the generating capacity of the Generating Facility associated with the Related Products to meet the Resource Adequacy Rulings of, or to confer Resource Adequacy Benefits on, any Person other than Buyer;

(b) Will not during the Term use, grant, pledge, assign or otherwise commit any portion of the generating capacity of the Generating Facility associated with the Related Products to meet the Resource Adequacy Rulings of, or to confer Resource Adequacy Benefits on, any Person other than Buyer;

(c) Shall take all action, including complying with all current and future CAISO Tariff provisions and decisions of the CPUC or any other Governmental Authority that address Resource Adequacy Rulings, and execute all documents that are reasonable and necessary to effect the use of the generating capacity of the Generating Facility associated with the Related Products for Buyer's sole benefit throughout the Term; and

(d) Comply with CPUC and CAISO requirements in order to provide Resource Adequacy Benefits; provided, however:

(i) if such requirements could interfere with the Operations of Seller, Seller shall be entitled to challenge such requirements with the CPUC or other relevant agency. Absent a ruling or other action granting a stay, Seller's compliance shall be required pending resolution of the challenge; and

(ii) if Seller interconnects the Generating Facility pursuant to a non-FERC-jurisdictional interconnection tariff, Seller shall not be required to provide

Resource Adequacy Benefits, and Buyer's total obligation to obtain Resource Adequacy Benefits pursuant to the Resource Adequacy Rulings with respect to the service area of Buyer will be decreased by the Generating Facility's generating capacity, provided that, if the outcome of any CPUC proceeding requires Seller to obtain a deliverability study, Seller shall promptly obtain such deliverability study and provide it to Buyer upon the completion of such deliverability study.

(e) Following the outcome of the distribution interconnection issues proceeding (R.11-09-011), the resource adequacy proceedings (R.09-10-032) and any future CAISO stakeholder process addressing deliverability, the CPUC has reserved the right to require appropriate amendments to this Agreement, as necessary to address full capacity deliverability status and whether a deliverability study may or may not be required for all AB1613 resources. The Parties agree to make amendments to this Agreement in accordance with any amendments required by the CPUC pursuant to the foregoing.

3.03 GHG Emissions Compliance Costs.

(a) Direct GHG Compliance Costs.

(i) During the Term, Buyer shall reimburse Seller for any Direct GHG Compliance Costs, other than GHG Emissions Allowances, which are separately addressed in the sections below, attributable to the Generating Facility for GHG emissions associated with the Power Product, within forty-five (45) days of Buyer's receipt from Seller of documentation, in form and substance acceptable to Buyer, establishing that: (1) Seller is actually liable for the Direct GHG Compliance Costs for GHG emissions attributed to the Power Product; and (2) Direct GHG Compliance Costs were imposed upon Seller by an authorized Governmental Authority with jurisdiction to impose Direct GHG Compliance Costs where the Generating Facility is located, or which otherwise has jurisdiction over Seller or the Generating Facility.

(ii) Buyer is not liable for reimbursement to Seller for Direct GHG Compliance Costs for GHG emissions associated with the Power Product if the GHG emissions for which Seller seeks reimbursement exceed the GHG Emissions Cap and based on the actual delivered Power Product.

(iii) The Generating Facility's GHG emissions shall be allocated between the useful thermal output, the electricity consumed on-site, and the exported Power Product based on the relative BTU content of the end product, consistent with Form CEC-2843, as amended.

(b) GHG Emissions Allowance Costs. Buyer shall bear the cost of GHG Emissions Allowances for GHG emissions attributable to the Generating Facility and

associated with the Power Product through either reimbursement, or direct procurement, as indicated in Section 1.08, provided that:

(i) Seller is actually required to procure such GHG Emissions Allowances for GHG emissions attributed to the Power Product;

(ii) Such GHG Emissions Allowances compliance requirements were imposed upon Seller by an authorized Governmental Authority with jurisdiction to impose GHG Emissions Allowances requirements where the Generating Facility is located, or which otherwise has jurisdiction over Seller or the Generating Facility;

(iii) The Generating Facility's GHG emissions, less any Free Allowance for which the Generating Facility is eligible, shall be allocated between the useful thermal output, the electricity consumed on-site, and the exported Power Product based on the relative BTU content of the end product consistent with Form CEC-2843, as amended;

(iv) Buyer's responsibility for GHG Emissions Allowances is limited to GHG emissions associated with the Power Product for which the Seller or the Generating Facility was not eligible to receive Free Allowances; and

(v) Buyer's responsibility for GHG Emissions Allowances will not exceed the GHG Emissions Cap based on the actual delivered Power Product.

(c) Reimbursement of Seller for GHG Emissions Allowances. If Seller has elected to manage its own GHG Emissions Allowances in Section 1.08, then, during the Term, Buyer shall reimburse Seller to the extent of Buyer's responsibility for GHG Emissions Allowances in accordance with Section 3.03(b) ("applicable quantity") within forty-fine (45) days of Buyer's receipt from Seller of documentation, in form and substance acceptable to Buyer, requesting reimbursement. If the CPUC has specified an index for use in determining the price to be paid for GHG Emissions Allowances, in no event shall Buyer's total payment to Seller for the applicable quantity exceed the total payment that would be due to Seller if the applicable quantity were purchased at the index price at the relevant time period.

(d) Buyer's Purchase of GHG Emissions Allowances. If Seller has elected to have Buyer purchase GHG Emissions Allowances for the Generating Facility in Section 1.08, then, during the Term and upon the CPUC's issuance of guidelines on the mechanics of Buyer's obligations to purchase GHG Emissions Allowances pursuant to CPUC Decision 09-12-042 (as modified by CPUC Decisions 10-04-055, 10-12-055, and 11-04-033), Buyer shall purchase GHG Emissions Allowances for Seller for the applicable quantity for the remainder of the Term in accordance with and subject to such guidelines, as may be revised from time to time.

(e) Notwithstanding anything to the contrary in this Section 3.03, this Section 3.03 shall not be applicable during or with respect to any QF Settlement Contract Payment Period applicable under this Agreement.

3.04 Site Control.

(a) Within sixty (60) days of the Effective Date and at all times during the Term, Seller shall have Site Control and shall provide Buyer with prompt Notice of any change in the status of Seller's Site Control.

(b) If the Generating Facility is a New Eligible CHP Facility, Seller shall provide Buyer with Notice of the status of its Site Control before commencing construction of the Generating Facility.

3.05 Permits. Seller shall obtain and maintain any and all Permits necessary for the Operation of the Generating Facility and to deliver electric energy from the Generating Facility to the Delivery Point.

3.06 Transmission.

(a) Interconnection Studies. Upon Buyer's request, Seller shall provide to Buyer true and complete copies of all Interconnection Studies received by Seller for the Generating Facility after the date that is twenty-four (24) months before the Effective Date.

(b) Seller's Responsibility. Seller shall, at its sole cost, obtain and maintain all distribution, transmission and interconnection rights and agreements (including all Governmental Authority approvals) required to enable Parallel Operation of the Generating Facility with the Transmission Provider's electric system and the applicable Control Area operator's electric grid and to effect Scheduling of the electric energy from the Generating Facility and transmission and delivery to the Delivery Point.

Except as otherwise provided in its interconnection agreement, the CAISO Tariff, or the Transmission Provider's tariff, rules or regulations, Seller shall pay all Transmission Provider charges or other charges directly caused by, associated with, or allocated to the following:

(i) All required Interconnection Studies, facilities upgrades, and agreements;

(ii) Interconnection of the Generating Facility to the Transmission Provider's electric system;

(iii) Any costs or fees associated with obtaining and maintaining a wholesale distribution access tariff agreement, if applicable; and

(iv) The transmission and delivery of electric energy from the Generating Facility to the Delivery Point.

(c) Acknowledgement. The Parties acknowledge and agree that any other agreement between Seller and Buyer, including any interconnection agreement, is separate and apart from this Agreement and does not modify or add to the Parties' obligations under this Agreement, and that any Party's breach under such other agreement does not excuse such Party's nonperformance under this Agreement, except to the extent that such breach constitutes a Force Majeure under this Agreement.

3.07 CAISO Relationship. Seller shall comply with the applicable requirements of the CAISO Tariff, including securing and maintaining in full force all of the CAISO agreements, certifications and approvals required in order for the Generating Facility to comply with the CAISO Tariff.

3.08 Generating Facility Modifications.

(a) Seller is responsible for the design, procurement and construction of all modifications necessary for the Generating Facility to meet the requirements of this Agreement and to comply with any restriction set forth in any Permit.

(b) Seller shall provide thirty (30) days advance Notice to Buyer if there is any modification (other than a routine fluctuation in output or consumption) of the Generating Facility, the Site Host Load or operations related to the Site Host Load changing:

(i) Energy output by five percent (5%) of Expected Term Year Energy Production; or,

(ii) The type of Primary Fuel consumed by the Generating Facility.

(c) Seller acknowledges that nothing in this Section 3.08 excuses Seller from any requirements of the CAISO's interconnection process, or any other applicable interconnection process.

3.09 Metering.

(a) CAISO-Approved Meter. Seller shall, at its own cost, install, maintain and test all CAISO-Approved Meters pursuant to the CAISO Tariff or other applicable metering requirements, and each CAISO-Approved Meter shall have net energy capability as required under Public Utilities Code Section 2840.2(b)(2).

(b) Check Meter. Buyer may, at its sole cost, furnish and install one or more Check Meters, as applicable, on the high voltage side of the substation associated with the Generating Facility or, if there is not enough space at such substation to install

the Check Meter, any other location mutually agreeable to the Parties. The Check Meter shall be interconnected with Buyer's communication network to permit:

(i) Periodic, remote collection of revenue quality meter data; and

(ii) Back-up real time transmission of operating-quality meter data through the Telemetry System set forth in Section 3.10.

Buyer shall test and recalibrate the Check Meter at least once every Term Year. The Check Meter will be locked or sealed, and the lock or seal shall be broken only by a Buyer representative. Seller has the right to be present whenever such lock or seal is broken. Buyer shall replace the Check Meter battery at least once every thirty-six (36) months; *provided*, *however*, if the Check Meter battery fails, Buyer shall promptly replace such battery.

(c) Use of Check Meter for Back-Up Purposes.

(i) Buyer shall routinely compare the Check Meter data to the CAISO-Approved Meter data.

(ii) If the deviation between the CAISO-Approved Meter data (after adjusting for any compensation factors introduced by the CAISO into the CAISO-Approved Meter) and the Check Meter data for any comparison is greater than 0.3%, Buyer shall provide Notice to Seller of such deviation and the Parties shall mutually arrange for a meter check or recertification of the Check Meter or CAISO-Approved Meter, as applicable.

(iii) Each Party shall bear its own costs for any meter check or recertification.

(iv) Testing procedures and standards for the Check Meter will be the same as for a comparable Buyer-owned meter. Seller shall have the right to have representatives present during all such tests.

(v) For the avoidance of doubt, the Check Meter is intended to be used for back-up purposes in the event of a failure or other malfunction of the CAISO-Approved Meter, and Check Meter data shall only be used to validate the CAISO-Approved Meter data and, in the event of a failure or other malfunction of the CAISO-Approved Meter, in place of the CAISO-Approved Meter until such time that the CAISO-Approved Meter is checked or recertified.

(d) Multiple Points of Metering at a Single Customer Site. Notwithstanding any other provision of this Agreement, Seller, at its sole expense and with the consent of Buyer and in compliance with the tariffs, rules and regulations of Buyer and the CAISO (including the CAISO Tariff), may establish for the Generating Facility more than a single point of metering at the number of locations, at a single customer site, that the Generating Facility interconnects with the CAISO-

Controlled Grid or Buyer's electrical system. The metered delivery of the Power Product pursuant to this Agreement will be determined as the meter readings for all such metering netted on an individual settlement interval basis.

3.10 Telemetry System. Seller is responsible for designing, furnishing, installing, maintaining and testing a real time Telemetry System in accordance with the CAISO Tariff.

3.11 Provision of Information.

(a) Upon Buyer's reasonable request by written Notice, Seller shall provide to Buyer (to the extent not already in Buyer's possession) within a commercially reasonable amount of time and subject to Section 9.09:

(i) All currently operative agreements with providers of distribution, transmission or interconnection services for the Generating Facility and all amendments thereto;

(ii) Any Permits concerning the Operation or licensing of the Generating Facility, and any applications or filings requesting or pertaining to such Permits;

(iii) Each of the following engineering documents for the Generating Facility:

1) Site plan drawings;

2) Electrical one-line diagrams;

3) Control and data acquisition details and configuration documents;

4) Major electrical equipment specifications;

5) Process flow diagrams;

6) Piping and instrumentation diagrams;

7) General arrangement drawings; and

8) Aerial photographs of the Site, if any;

(iv) Instrument specifications, installation instructions, operating manuals, maintenance procedures and wiring diagrams for the CAISO-Approved Meter(s) and the Telemetry System reasonably requested by Buyer; and

(v) Any currently operative filings, rulings, orders or other pleadings or papers concerning the qualification of the Generating Facility as an Eligible CHP Facility.

(b) If applicable and subject to Section 9.09, as soon as possible, Seller shall provide to Buyer (i) engineering specifications and design drawings for the Telemetry System, and (ii) annual test reports for the CAISO-Approved Meters.

(c) Subject to Section 9.09 and upon Buyer's request, Seller shall make commercially reasonable efforts to provide Buyer with all documentation necessary for Buyer to comply with any discovery or data request for information from the CPUC, CEC, FERC, any court, administrative agency, legislative body or other tribunal.

3.12 Progress Reporting. If the Generating Facility is a New Eligible CHP Facility, Seller shall use commercially reasonable efforts to meet the Milestone Schedule and shall advise Buyer as soon as reasonably practicable of any problems or issues of which Seller is aware which may materially impact its ability to meet the Milestone Schedule. No later than the 10th day of each month until the Term Start Date, Seller shall, in accordance with Exhibit F, prepare and provide to Buyer a written report detailing Seller's progress toward meeting the Milestone Schedule. Seller shall include in such report a list of all letters, notices and Permits to or from any Governmental Authority (and the CAISO) applicable to Seller's effort to meet the Milestone Schedule, and shall provide any such documents as may be reasonably requested on Notice from Buyer.

3.13 Fuel Supply. Seller shall supply all fuel required for the Power Product and any testing of the Generating Facility.

3.14 Operation and Record Keeping. Seller shall:

(a) Operate the Generating Facility in accordance with Prudent Electrical Practices;

(b) Comply with the Forecasting requirements, as set forth in Exhibit G;

(c) Use reasonable efforts to Operate the Generating Facility so that the Power Product conforms with the Forecast provided in accordance with Exhibit G;

(d) Pay all CAISO Charges, as set forth in Exhibit H;

(e) Pay all SDD Adjustments for which Seller is responsible, as set forth in Exhibit I;

(f) Comply with the Planned Outage scheduling procedures, as set forth in Section 1.04;

(g) Comply with the Outage Schedule Submittal Requirements, as set forth in Exhibit N;

(h) Use reasonable efforts to comply with CAISO orders for delivery of the Power Product during an Emergency;

(i) Use reasonable efforts to reschedule any Planned Outage that occurs during an Emergency;

(j) Keep all Operating records required of a CHP Eligible Facility by any applicable CPUC order, as well as any additional information that may be required of a CHP Eligible Facility in order to demonstrate compliance with all applicable California utility industry standards which have been adopted by the CPUC;

(k) Maintain and provide electronically or in hard copy a copy of all relevant daily Operating records to Buyer within twenty (20) days of a request by Notice from Buyer, including:

(i) Real and reactive power production;

(ii) Changes in Operating status;

(iii) Protective apparatus operations; and

(iv) Any unusual conditions found during inspections.

(l) Provide, upon Buyer's request, all reports of actual or forecasted outages that Buyer may reasonably require for the purpose of enabling Buyer to comply with Section 761.3 of the California Public Utilities Code or any Applicable Law mandating the reporting by investor-owned utilities of expected or experienced outages by facilities under contract to supply electric energy;

(m) Pay all Scheduling Fees, as set forth in Exhibit E;

(n) Not participate in the CAISO Station Power Protocol;

(o) If applicable, register with the NERC as the Generating Facility's Generator Owner and Generator Operator if Seller is required to register pursuant to the NERC Registration Criteria;

(p) If applicable, maintain documentation of all procedures applicable to the testing and maintenance of the Generating Facility protective devices as necessary to comply with the NERC Reliability Standards applicable to protection systems for electric generators if Generator Owner or Generator Operator is required to maintain such documentation under the NERC Reliability Standards; and

(q) At least thirty (30) days before the Term End Date or as soon as practicable before the date of an early termination of this Agreement, (i) submit to the CAISO the name of the Scheduling Coordinator that will replace Buyer, and (ii) cause the Scheduling Coordinator that will replace Buyer to submit a letter to the CAISO accepting the designation as Seller's Scheduling Coordinator.

3.15 Power Product Curtailments at Transmission Provider's or CAISO's Request.

(a) Seller shall promptly curtail the production of the Power Product upon receipt of a curtailment notice or instruction from the Transmission Provider or the CAISO

(which may be communicated by Buyer), which notice shall only be provided when it reasonably believes that curtailment of the Power Product is required to comply with (i) the Transmission Provider's maintenance requirements and operating orders, (ii) a CAISO Declared Over-Generation Condition, or (iii) an Emergency.

(b) Notwithstanding Section 3.15(a), except as may be required in order to respond to any Emergency, Buyer shall (i) use reasonable efforts to coordinate the Transmission Provider's curtailment needs with Seller to the extent Buyer can influence such needs, or (ii) request that the Transmission Provider and the CAISO limit the curtailment duration.

3.16 Report of Lost Output. To the extent the conditions set forth in Sections 3.16(a) through (d) occur, Seller shall prepare and provide to Buyer, by the fifth (5th) Business Day following the end of each month during the Term, a lost output report. The lost output report shall identify the date, time, duration, cause and amount by which the Metered Energy was reduced below the Seller's Forecast due to:

(a) Planned Outages;

(b) CAISO or Transmission Provider-ordered curtailments;

(c) Force Majeure; or

(d) Forced Outages.

3.17 Eligible CHP Facility Status.

(a) To the extent required by Applicable Law, administration of this Agreement or program eligibility guidelines established by the CEC, within thirty (30) Business Days following the Term Start Date or Notice from Buyer, Seller shall provide to Buyer certification from the CEC that the Generating Facility meets the applicable operating and efficiency standards for Eligible CHP Facilities for the applicable year.

(b) Seller shall take all necessary steps, including making or supporting timely filings with the appropriate Governmental Authority, in order to maintain certification of the Eligible CHP Facility status of the Generating Facility throughout the Term.

(c) Seller shall provide to Buyer all documentation, including calculations and verifiable supporting data provided to the appropriate Governmental Authority, which demonstrates the compliance of the Generating Facility with the Eligible CHP Facility operating and efficiency standards for the applicable year.

3.18 Notice of Cessation or Termination of Service Agreements. Seller shall provide Notice to Buyer within one (1) Business Day if there is a termination of, or cessation of service under, any agreement required in order for the Generating Facility to:

(a) Interconnect with the Transmission Provider's electric system;

(b) Transmit and deliver electric energy to the Delivery Point; or

(c) Own and operate any CAISO-Approved Meter.

3.19 Buyer's Access Rights. Upon providing at least five (5) Business Day advance Notice to Seller, or as set forth in any Applicable Law (whichever is later), Buyer has the right to examine the Site, the Generating Facility and the Operating records, provided that Buyer follows Seller's safety policies and procedures that Seller has communicated to Buyer, does not interfere with or hinder Seller's Operations, and agrees to escorted access to the Generating Facility during regular business hours for:

(a) Any purpose reasonably connected with this Agreement;

(b) The exercise of any and all rights of Buyer under Applicable Law or its tariff schedules and rules on file with the CPUC; or

(c) The inspection and testing of any Check Meter, CAISO-Approved Meter or the Telemetry System.

Notwithstanding anything to the contrary set forth in this Section 3.19, in the case of an Emergency which, in Buyer's reasonable discretion, requires Buyer to examine the Site or the Generating Facility, the Notice requirements of this Section 3.19 do not apply.

3.20 Seller Financial Information.

(a) The Parties shall determine, through consultation with their respective independent registered public accounting firms, whether Buyer is required to consolidate Seller's financial statements with Buyer's financial statements for financial accounting purposes under Financial Accounting Standard Boards Interpretation No. 46(R), "Consolidation of Variable Interest Entities" or future guidance issued by accounting profession governance bodies or the SEC that affects Buyer accounting treatment for this Agreement. If, as a result of this review (or subsequent reviews as required), the Parties determine that such consolidation is required for a given period, or in the event the Parties cannot agree on whether consolidation is required, then the Parties agree to the following provisions for such period.

(i) Within thirty (30) days following the end of each year, Seller shall deliver to Buyer in a format mutually agreeable to the Parties: (1) unaudited financial statements together with related footnotes as necessary to comply with GAAP, and (2) a completed annual disclosure checklist with supporting financial schedules necessary for Buyer to prepare its annual filing with the SEC. Buyer will provide to Seller such checklist before the end of each year and include only items considered material to Buyer. If audited financial statements are prepared for the year, Seller shall provide

such statements to Buyer within five Business Days after those statements are issued.

(ii) Within twenty (20) days following the end of each calendar quarter, Seller shall deliver to Buyer in a format mutually agreeable to the Parties: (1) an unaudited condensed statement of income for the calendar quarter and year-to-date, (2) an unaudited condensed statement of cash flows for the calendar quarter and year-to-date, (3) an unaudited condensed balance sheet at the end of such calendar quarter, and (4) a completed quarterly disclosure checklist with supporting financial schedules necessary for Buyer to prepare its quarterly filing with the United States Securities and Exchange Commission. Buyer will provide to Seller such checklist before the end of each quarter and include only items considered material to Buyer.

(iii) Seller shall prepare its financial statements to be delivered in accordance with this Section 3.20 in accordance with GAAP.

(iv) Promptly upon Notice from Buyer, Seller shall allow Buyer's internal auditors and independent registered public accounting firm reasonable access to Seller's records and personnel, so that Buyer's internal auditors and independent registered public accounting firm can conduct financial statement audits in accordance with the standards of the Public Company Accounting Oversight Board (United States), as well as internal control audits in accordance with Section 404 of the Sarbanes-Oxley Act of 2002, as applicable. Buyer shall take reasonable steps to ensure that its internal auditors and independent registered public accounting firm (1) treat as confidential any information disclosed to them by Buyer pursuant to this Section 3.20(a)(iv), (2) such information is used solely for purposes of conducting the audits described in this Section 3.20(a)(iv), (3) disclose any information received only to personnel responsible for conducting the audits. Within 30 days of Seller's receipt of Notice from Buyer, Seller shall remediate any material deficiency in Seller's internal controls of financial reporting identified by Buyer or Buyer's independent registered public accounting firm during or as a result of the audits permitted in this Section 3.20(a)(iv), provided that Seller has the right to challenge the appropriateness of any determination of deficiency. All reasonable expenses for the foregoing shall be borne by Buyer.

(v) Within two (2) Business Days following the occurrence of any event affecting Seller which Seller understands, during the Term, would require Buyer to disclose such event in a Form 8-K filing with the SEC, Seller shall provide to Buyer a Notice describing such event in sufficient detail to permit Buyer to make a Form 8-K filing. Such items may include the following:

1) Acquisition or disposition of a material amount of assets outside of the ordinary course of Seller's business;

2) Creation of a material "direct financial obligation" or "off-balance sheet financing arrangement", as such terms are defined in Item 2.03 of the Form 8-K, as amended from time to time;

3) Existence of "material legal proceedings", as defined in Item 103 of Regulation S-K, as amended from time to time; and

4) Entry into, or termination of, a material contract upon which Seller's business is substantially dependent and outside of the ordinary course of Seller's business.

(b) Buyer shall treat Seller's financial statements or other financial information provided under the terms of this Section 3.20 in strict confidence and, accordingly:

(i) Shall utilize such Seller financial information *only* for purposes of preparing, reviewing or certifying Buyer's or any Buyer parent company financial statements, for making regulatory, tax or other filings required by law in which Buyer is required to demonstrate or certify its or any parent company's financial condition or to obtain Credit Ratings; and

(ii) Shall make such Seller financial information available only to its officers, directors, employees or auditors who are responsible for preparing, reviewing or certifying Buyer's or any Buyer parent company financial statements, to the SEC and the Public Company Accounting Oversight Board (United States) in connection with any oversight of Buyer's or any Buyer parent company financial statement and to those Persons who are entitled to receive confidential information as identified in Sections 9.09(a)(vi) and 9.09(a)(vii).

3.21 NERC Electric System Reliability Standards.

(a) During the Term, for purposes of complying with any NERC Reliability Standards applicable to the Generating Facility, Seller (or an agent of Seller as agreed to by Buyer in its reasonable discretion) must be registered with the NERC as the Generator Operator and the Generator Owner for the Generating Facility and must perform all Generator Operator Obligations and Generator Owner Obligations except those Generator Operator Obligations that Buyer, in its capacity as Scheduling Coordinator is required to perform under this Agreement or under the CAISO Tariff.

(b) Notwithstanding anything to the contrary set forth in this Section 3.21 and subject to the indemnity obligations set forth in Section 9.03(g), each Party acknowledges that such Party's performance of the Generator Operator Obligations or Generator

Owner Obligations may not satisfy the requirements for self-certification or compliance with the NERC Reliability Standards, and that it shall be the sole responsibility of each Party to implement the processes and procedures required by the NERC, the WECC, the CAISO, or a Governmental Authority in order to comply with the NERC Reliability Standards.

(c) Buyer as Scheduling Coordinator will reasonably cooperate with Seller to the extent necessary to enable Seller to comply and for Seller to demonstrate Seller's compliance with the NERC Reliability Standards referenced above. Buyer's cooperation will include providing to Seller, or such other Person as Seller designates in writing, information in Buyer's possession that Buyer as Scheduling Coordinator has provided to the CAISO related to the Generating Facility or actions that Buyer has taken as Scheduling Coordinator related to Seller's compliance with the NERC Reliability Standards referenced above (e.g., Seller's notices and updates provided by Buyer to the CAISO via SLIC). Buyer may, in its reasonable discretion (depending upon the quantity of information requested by Seller and the timeframe established by Seller for compliance), comply with the requirement to provide information set forth in the previous sentence, by making such information available for inspection by Seller or by providing responsive summaries or excerpts of same, so long as the foregoing enables Seller to comply with the NERC Reliability Standards. In addition, Buyer may redact any information or data that is confidential to Buyer from materials or information to be supplied to Seller.

3.22 Allocation of Availability Incentive Payments and Non-Availability Charges.

If the Generating Facility is subject to the terms of the Availability Standards, Non-Availability Charges, and Availability Incentive Payments, as contemplated under Section 40.9 of the CAISO Tariff, any Availability Incentive Payments will be for the benefit of Seller and for Seller's account and any Non-Availability Charges will be the responsibility of Seller and for Seller's account.

**** End of Article Three ****

ARTICLE FOUR. BUYER'S OBLIGATIONS

4.01 Obligation to Pay. For Seller's full compensation under this Agreement during the Term, Buyer shall make a monthly payment (a "Monthly Contract Payment"): (a) calculated pursuant to Exhibit C to this Agreement for Sellers who have interconnected the Generating Facility pursuant to a non-FERC jurisdictional interconnection tariff and (b) if the Generating Facility is interconnected pursuant to a WDAT or the CAISO Tariff, and Seller is able to commence the Term Start Date and begin energy deliveries, but is not yet able to provide Resource Adequacy Benefits in compliance with all CPUC and CAISO requirements, then, the Monthly Contract Payment for the Power Product shall be calculated in accordance with the Applicable QF 20MW Settlement Contract Payment Provisions with Seller being paid the short run avoided cost rate for energy and as-available capacity applicable under the Applicable QF 20MW Settlement Contract Payment Provisions until the first day of the month following the date that Seller notifies Buyer that the Generating Facility is able to be counted for resource adequacy purposes and is able to provide Resource Adequacy Benefits in compliance with all CPUC and CAISO requirements, at which time the Monthly Contract Payment for the Power Product shall be calculated pursuant to Exhibit C of this Agreement. Seller acknowledges and agrees that so long as the Monthly Contract Payment is determined in accordance with the Applicable QF 20MW Settlement Contract Payment Provisions, Seller shall be obligated to comply with and be bound by all such Applicable QF 20MW Settlement Contract Payment Provisions and such Applicable QF 20MW Settlement Contract Payment Provisions shall be deemed to be terms of this Agreement. Seller agrees to notify Buyer when Seller is able to have the Generating Facility counted for resource adequacy purposes and provide Resource Adequacy Benefits in compliance with all CPUC and CAISO requirements within five (5) Business Days of the occurrence thereof. Notwithstanding anything to the contrary in this Agreement, if during an applicable QF Settlement Contract Payment Period any payment is required under the provisions of this Agreement which is duplicative of any payment required under the QF 20MW Settlement Contract, the payment shall be calculated and determined in accordance with the QF 20MW Settlement Contract.

4.02 Payment Adjustments.

(a) Buyer shall adjust each Monthly Contract Payment determined under the QF 20MW Settlement Contract in accordance with the Applicable QF 20MW Settlement Contract Payment Provisions, including, without limitation, the terms of Section 4.02 of the QF 20MW Settlement Contract. Buyer shall adjust each Monthly Contract Payment determined under Exhibit C of this Agreement to Seller to account for:

(i) Scheduling Fees owed by Seller to Buyer, as set forth in Exhibit E;

(ii) Any SDD Energy Adjustment or SDD Administrative Charge, as set forth in Exhibit I;

(iii) Any CAISO Charges owed by Seller to Buyer, as set forth in Exhibit H;

(iv) Any payment adjustments (including adjustments to CAISO Charges) provided for under this Agreement;

(v) Any Governmental Charges owed by either Party to the other Party, as set forth in Section 8.02; and

(vi) The agreement of the Parties that Buyer shall have no liability to make any payments to Seller for any electricity deliveries from the Generating Facility in a Term Year that exceed one hundred and twenty percent (120%) of Expected Term Year Energy Production.

(b) During the Term, any payment adjustments will be added to or deducted from a subsequent regular Monthly Contract Payment that is made by Buyer to Seller after the expiration of a 30-day period which begins upon Buyer's receipt of all of the information required in order to calculate the payment adjustment, provided that during the QF Settlement Contract Payment Period this provision shall not be applicable and the Applicable QF 20MW Settlement Contract Payment Provisions shall apply.

(c) After the Term End Date, Buyer shall invoice Seller for any payment adjustments within sixty (60) days of Buyer's receipt of all of the information required in order to calculate the payment adjustment, provided that during the QF Settlement Contract Payment Period this provision shall not be applicable and the Applicable QF 20MW Settlement Contract Payment Provisions shall apply.

4.03 Payment Statement and Payment.

(a) No later than thirty (30) days after the end of each calendar month (or the last day of the month if the month in which the payment statement is being sent is February), or the last Business Day of the month if such 30th day (or 28th or 29th day for February) is not a Business Day, Buyer shall mail to Seller:

(i) A table showing the hourly electric energy quantities for each of the following, in MWh per hour:

1) Seller's Energy Forecast;

2) Seller's Day-Ahead Forecast;

3) Metered Energy;

4) The final Buyer Energy Schedule; and

5) The final Buyer Parent Energy Schedule.

(ii) A statement showing:

1) TOD Period subtotals and overall monthly totals for each of the items set forth in Section 4.03(a)(i);

2) A calculation of the Monthly Contract Payment, as set forth in Exhibit C;

3) A calculation of any payment adjustments pursuant to Section 4.02; and

4) A calculation of the net dollar amount due for the month.

(iii) Buyer's payment to Seller, in accordance with Section 9.15, in the net dollar amount owed to Seller for the month; *provided*, *however*, in the event the statement shows a net amount owed to Buyer, Seller shall pay such amount within twenty (20) days of the statement date.

(b) If Buyer determines that a calculation of Metered Energy is incorrect as a result of an inaccurate meter reading or the correction of data by the CAISO in the CAISO's meter-data acquisition and processing system, Buyer shall promptly recompute the Metered Energy quantity for the period of the inaccuracy based on an adjustment of such inaccurate meter reading in accordance with the CAISO Tariff.

Buyer shall then promptly recompute any payment or payment adjustment affected by such inaccuracy. Any amount due from Buyer to Seller or Seller to Buyer, as the case may be, shall be made as an adjustment to the next monthly statement that is calculated after Buyer's recomputation using corrected measurements.

If the recomputation results in a net amount owed to Buyer after offsetting any amounts owing to Seller as shown on the next monthly statement, any such additional amount still owing to Buyer shall be shown as an adjustment on Seller's monthly statement until such amount is fully collected by Buyer.

At Buyer's sole discretion, Buyer may offset any remaining amount owed to Buyer in any subsequent monthly payments to Seller or invoice Seller for such amount, in which case Seller must pay the amount owing to Buyer within twenty (20) days of receipt of such invoice.

(c) Buyer reserves the right to deduct amounts that would otherwise be due to Seller under this Agreement from any amounts owing and unpaid by Seller to Buyer:

(i) Under this Agreement; or

(ii) Arising out of or related to any other agreement, tariff, obligation or liability pertaining to the Generating Facility.

(d) Except as provided in Section 4.03(b) and as otherwise provided in this Section 4.03(d), if, within ninety (90) days of receipt of Buyer's payment statement, Seller does not give Notice to Buyer of an error, then Seller shall be deemed to have waived any error in Buyer's statement, computation and payment and the statement shall be conclusively deemed correct and complete; *provided, however*, that if an error is identified by Seller as a result of settlement, audit or other information provided to Seller by the CAISO after the expiration of the original 90-day period, Seller shall have an additional ninety (90) days from the date on which it receives the information from the CAISO in which to give Notice to Buyer of the error identified by such settlement, audit or other information.

If Seller identifies an error in Seller's favor and Buyer agrees that the identified error occurred, Buyer shall reimburse Seller for the amount of the underpayment caused by the error and add the underpayment to the next monthly statement that is calculated.

If Seller identifies an error in Buyer's favor and Buyer agrees that the identified error occurred, Seller shall reimburse Buyer for the amount of overpayment caused by the error and Buyer shall apply the overpayment to the next monthly statement that is calculated.

If the recomputation results in a net amount still owing to Buyer after applying the overpayment, the next monthly statement shall show a net amount owing to Buyer.

At Buyer's sole discretion, Buyer may apply this net amount owing to Buyer in any subsequent monthly statements to Seller or invoice Seller for such amount, in which case Seller must pay the amount owing to Buyer within twenty (20) days of receipt of such invoice.

The Parties shall negotiate to resolve any disputes regarding claimed errors in a statement. Any disputes which the Parties are unable to resolve through negotiation may be submitted for resolution through the dispute resolution procedure in Article Ten.

(e) Nothing in this Section 4.03 limits a Party's rights under applicable tariffs, other agreements or Applicable Law.

(f) Notwithstanding anything to the contrary in this Section 4.03, this Section 4.03 shall not be applicable during or with respect to any QF Settlement Contract Payment Period applicable under this Agreement and during such time the Applicable QF 20MW Settlement Contract Payment Provisions shall apply.

4.04 No Representation by Buyer. Any review by Buyer of the design, engineering, construction, testing and Operation of the Generating Facility is solely for Buyer's information. Buyer makes no representation that:

(a) It has reviewed the financial viability, technical feasibility, operational capability, or long term reliability of the Generating Facility;

(b) The Generating Facility complies with any Applicable Laws; or

(c) The Generating Facility will be able to meet the terms of this Agreement.

Seller shall in no way represent to any third party that any such review by Buyer constitutes any such representation.

4.05 Buyer's Responsibility. Buyer shall, at its sole cost, obtain and maintain all distribution, transmission and interconnection rights and agreements (including all Governmental Authority approvals) required to enable transmission and delivery of electric energy at and after the Delivery Point.

4.06 Buyer As Scheduling Coordinator. Buyer shall take all steps necessary to become the Scheduling Coordinator for the Generating Facility during the Term.

*** *End of Article Four* ***

ARTICLE FIVE. FORCE MAJEURE

5.01 No Default for Force Majeure. Neither Party will be in default in the performance of any of its obligations set forth in this Agreement, except for obligations to pay money, when and to the extent failure of performance is caused by Force Majeure.

5.02 Requirements Applicable to the Claiming Party. If a Party, because of Force Majeure, is rendered wholly or partly unable to perform its obligations when due under this Agreement, such Party (the "Claiming Party") shall be excused from whatever performance is affected by the Force Majeure to the extent so affected.

In order to be excused from its performance obligations under this Agreement by reason of Force Majeure:

(a) The Claiming Party, within fourteen (14) days after the initial occurrence of the claimed Force Majeure, must give the other Party Notice describing the particulars of the occurrence; and

(b) The Claiming Party must timely provide evidence reasonably sufficient to establish that the occurrence constitutes Force Majeure as defined in this Agreement.

The suspension of the Claiming Party's performance due to Force Majeure may not be greater in scope or longer in duration than is required by such Force Majeure.

In addition, the Claiming Party shall use diligent efforts to remedy its inability to perform.

This Article Five will not require the settlement of any strike, walkout, lockout or other labor dispute on terms which, in the sole judgment of the Claiming Party, are contrary to its interest. It is understood and agreed that the settlement of strikes, walkouts, lockouts or other labor disputes shall be at the sole discretion of the Claiming Party.

When the Claiming Party is able to resume performance of its obligations under this Agreement, the Claiming Party shall give the other Party prompt Notice to that effect.

5.03 Termination. The non-Claiming Party may terminate this Agreement on Notice, which Notice will be effective five (5) Business Days after such Notice is provided, in the event of Force Majeure which materially interferes with the Claiming Party's ability to perform its obligations under this Agreement and which extends for more than three hundred and sixty-five (365) consecutive days, or for more than a total of three hundred and sixty-five (365) days in any consecutive 540-day period.

**** End of Article Five ****

ARTICLE SIX. EVENTS OF DEFAULT; REMEDIES

6.01 Events of Default. An "Event of Default" means the occurrence of any of the following:

(a) With respect to either Party (a "Defaulting Party"):

(i) Any representation or warranty made by such Party in this Agreement that is false or misleading in any material respect when made or when deemed made or repeated if the representation or warranty is continuing in nature, if such misrepresentation or breach of warranty is not:

1) Remedied within ten (10) Business Days after Notice from the Non-Defaulting Party to the Defaulting Party; or

2) Capable of a cure, but the Non-Defaulting Party's damages resulting from such misrepresentation or breach of warranty can reasonably be ascertained and the payment of such damages is not made within ten (10) Business Days after a Notice of such damages is provided by the Non-Defaulting Party to the Defaulting Party;

(ii) Except for an obligation to make payment when due, the failure to perform any material covenant or obligation set forth in this Agreement (except to the extent constituting a separate Event of Default or to the extent excused by a Force Majeure) if such failure is not remedied within thirty (30) days after Notice of such failure is provided by the Non-Defaulting Party to the Defaulting Party, which Notice sets forth in reasonable detail the nature of the Event of Default; *provided*, *however*, that if the Event of Default is not reasonably capable of being cured within such 30-day cure period, the Defaulting Party shall have such additional time (not to exceed 120 days) as is reasonably necessary to cure such Event of Default, so long as such Defaulting Party promptly commences and diligently pursues such cure;

(iii) A Party fails to make when due any payment (other than amounts disputed in accordance with the terms of this Agreement) due and owing under this Agreement and such failure is not cured within five Business Days after Notice is provided by the Non-Defaulting Party to the Defaulting Party of such failure;

(iv) A Party becomes Bankrupt; or

(v) A Party consolidates or amalgamates with, or merges with or into, or transfers all or substantially all of its assets to, another Person and, at the time of such consolidation, amalgamation, merger or transfer, the resulting, surviving or transferee Person fails to assume all the obligations of such Party under this Agreement to which such Party or its predecessor

was a party by operation of law or pursuant to an agreement reasonably satisfactory to the other Party.

(b) With respect to Seller's Guarantor, if any (each event listed below to be deemed an Event of Default with respect to Seller):

(i) Any representation or warranty made by a Guarantor in connection with this Agreement is false or misleading in any material respect when made or when deemed made or repeated if the representation or warranty is continuing in nature and the misrepresentation or breach of warranty is not remedied within ten (10) Business Days after Notice;

(ii) The failure of a Guarantor to make any payment required or to perform any other material covenant or obligation in any Guaranty Agreement and such failure is not remedied within three (3) Business Days after Notice is provided by the Non-Defaulting Party to the Guarantor;

(iii) A Guarantor becomes Bankrupt and replacement credit support is not provided within three (3) Business Days after Notice;

(iv) The occurrence and continuation of a default, event of default or other similar condition or event under one or more agreements or instruments, individually or collectively, relating to indebtedness for borrowed money in the aggregate amount of not less than the Cross Default Amount, which results in such indebtedness becoming immediately due and payable and replacement credit support is not provided within three (3) Business Days after Notice;

(v) The failure of any Guaranty Agreement to be in full force and effect for purposes of this Agreement (other than in accordance with its terms) and replacement credit support is not provided within three (3) Business Day after Notice; or

(vi) The Guarantor repudiates, disaffirms, disclaims, or rejects, in whole or in part, or challenges the validity of any Guaranty Agreement given to Buyer and replacement credit support is not provided within three (3) Business Days after Notice.

(c) With respect to Seller:

(i) Seller does not own or lease the Generating Facility or otherwise have the authority over the Generating Facility as required in Section 3.04, and Seller has not cured a failure with respect to Section 3.04(a) within thirty (30) days after providing Notice to Buyer in accordance with Section 3.04(a);

(ii) The total quantity of Metered Energy in any Term Year is less than 10% percent the Expected Term Year Energy Production, and Seller fails to demonstrate a legitimate reason for such failure within ten (10) Business Days after Notice from Buyer;

(iii) Except as provided for in Section 3.01(e), Seller (1) conveys, transfers, allocates, designates, awards, reports or otherwise provides any and all of the Product, or any portion thereof, or any benefits derived therefrom, to any party other than Buyer (except as may relate to transactions in the imbalance market arising from ordinary course deviations between Metered Energy and energy Scheduled to Buyer), or (2) starts up or Operates the Generating Facility per instruction of or for the benefit of any third party (except in order to satisfy the Site Host Load, or as required by other Applicable Laws);

(iv) Seller intentionally or knowingly delivers, Schedules, or attempts to deliver or Schedule at the Delivery Point for sale under this Agreement electric energy that was not generated by the Generating Facility;

(v) Seller removes from the Site equipment upon which the As-Available Contract Capacity has been based, except for the purposes of replacement, refurbishment, repair, repowering or maintenance, and such equipment is not returned within five (5) Business Days after Notice from Buyer to Seller;

(vi) Termination of, or cessation of service under, any agreement necessary for the interconnection of the Generating Facility to the Transmission Provider's electric system for transmission and delivery of the electric energy from the Generating Facility to the Delivery Point, or for metering the Metered Energy, and such service is not reinstated, or alternative arrangements implemented, within one hundred and twenty (120) days after such termination or cessation;

(vii) Seller fails to provide any financial statements or other information within the timeframe and in the manner set forth in Section 3.20, and such failure is not remedied within ten (10) days after Notice from Buyer to Seller;

(viii) Seller fails to remediate any material deficiency in internal controls over financial reporting in accordance with Section 3.20;

(ix) Seller fails to take all reasonable actions and execute all documents or instruments that are reasonable and necessary to effectuate the use of the Related Products for Buyer's benefit throughout the Term as specified in Section 3.01, if such failure is not remedied within ten (10) days after Notice of such failure is provided by Buyer to Seller, which Notice sets forth in reasonable detail the nature of the Event of Default; *provided*,

however, that if the Event of Default is not reasonably capable of being cured within such 10-day cure period, Seller shall have such additional time (not to exceed 120 days) as is reasonably necessary to cure such Event of Default, so long as Seller promptly commences and diligently pursues such cure;

(x) The occurrence and continuation of a default, event of default or other similar condition or event under any loan agreement with any Lender, or under any other related agreement or instrument with or for the benefit of any Lender, which results in any indebtedness under those agreements or instruments becoming immediately due and payable; *provided*, *however*, if Seller, Buyer and a Lender have entered into a Collateral Assignment Agreement with substantially the provisions set forth in Section 9.05, and the terms of such Collateral Assignment Agreement conflict or are inconsistent with this Section 6.01(c)(x), the provisions of the Collateral Assignment Agreement control;

(xi) If any failure by Seller to comply with the CAISO Tariff materially impacts Buyer's ability to comply with this Agreement, the CAISO Tariff or other Applicable Laws, and such failure by Seller (including any consequences suffered by Buyer) is not cured within thirty (30) days after Notice from Buyer to Seller;

(xii) If Seller materially modifies the Generating Facility without Buyer's prior written consent;

(xiii) Seller fails to satisfy the creditworthiness and collateral requirements in Sections 2 and 3 of Exhibit D and such failure is not cured within five (5) Business Days after Notice is provided by Buyer to Seller of such failure;

(xiv) The stock or equity ownership interest in Seller has been pledged or assigned as collateral or otherwise to any party other than Lender;

(xv) Seller fails to post and maintain the Development Security pursuant to Section 4(b) of Exhibit D and such failure is not cured within five Business Days after Notice of such failure;

(xvi) Seller fails to maintain its status as an Eligible CHP Facility during the Term; or

(xvii) If Seller fails to satisfy all of the conditions set forth in Section 2.01 before the Term Start Date, and such failure is not cured within 30 Business Days after Notice from Buyer to Seller.

6.02 Early Termination. If an Event of Default has occurred there will be no opportunity to cure except as specified in Section 6.01 or pursuant to a Collateral Assignment Agreement agreed upon by Buyer, Seller and Lender in accordance with Section 9.05. The Party taking the default (the "Non-Defaulting Party") will have the right to:

(a) Designate by Notice to the Defaulting Party a date, no later than twenty (20) days after the Notice is effective, for the early termination of this Agreement (an "Early Termination Date");

(b) Immediately suspend performance under this Agreement; and

(c) Pursue all remedies available at law or in equity against the Defaulting Party (including monetary damages), except to the extent that such remedies are limited by the terms of this Agreement.

6.03 Termination Payment. As soon as practicable after an Early Termination Date is declared, the Non-Defaulting Party shall provide Notice to the Defaulting Party of the sum of all amounts owed by the Defaulting Party under this Agreement, including Forward Settlement Amounts, less any amounts owed by the Non-Defaulting Party to the Defaulting Party under this Agreement (the "Termination Payment"). The Notice shall include a written statement, setting forth, in reasonable detail, the calculation of such Termination Payment together with appropriate supporting documentation. If the Generating Facility is a New Eligible CHP Facility, no Forward Settlement Amount is assessed for any Termination Payment due to Buyer as the Non-Defaulting Party by Seller as the Defaulting Party if this Agreement is terminated before the Term Start Date.

If the Termination Payment is positive, the Defaulting Party shall pay such amount to the Non-Defaulting Party within ten (10) Business Days after the Notice is provided. If the Termination Payment is negative (i.e., the Non-Defaulting Party owes the Defaulting Party more than the Defaulting Party owes the Non-Defaulting Party), then the Non-Defaulting Party shall pay such amount to the Defaulting Party within 10 Business Days after the Notice is provided.

The Parties shall negotiate to resolve any disputes regarding the calculation of the Termination Payment. Any disputes which the Parties are unable to resolve through negotiation may be submitted for resolution through the dispute resolution procedure in Article Ten.

**** End of Article Six ****

ARTICLE SEVEN. LIMITATIONS OF LIABILITIES

EXCEPT AS SET FORTH IN THIS ARTICLE SEVEN, THERE ARE NO WARRANTIES BY EITHER PARTY UNDER THIS AGREEMENT, INCLUDING ANY WARRANTY OF MERCHANTABILITY OR FITNESS FOR A PARTICULAR PURPOSE, AND ANY AND ALL IMPLIED WARRANTIES ARE DISCLAIMED. THE PARTIES CONFIRM THAT THE EXPRESS REMEDIES AND MEASURES OF DAMAGES PROVIDED IN THIS AGREEMENT SATISFY THE ESSENTIAL PURPOSES HEREOF.

FOR BREACH OF ANY PROVISION FOR WHICH AN EXPRESS REMEDY OR MEASURE OF DAMAGES IS PROVIDED, SUCH EXPRESS REMEDY OR MEASURE OF DAMAGES IS THE SOLE AND EXCLUSIVE REMEDY, THE OBLIGOR'S LIABILITY IS LIMITED AS SET FORTH IN SUCH PROVISION AND ALL OTHER REMEDIES OR DAMAGES AT LAW OR IN EQUITY ARE WAIVED, UNLESS THE PROVISION IN QUESTION PROVIDES THAT THE EXPRESS REMEDIES ARE IN ADDITION TO OTHER REMEDIES THAT MAY BE AVAILABLE.

IF NO REMEDY OR MEASURE OF DAMAGES IS EXPRESSLY PROVIDED FOR IN THIS AGREEMENT, THE OBLIGOR'S LIABILITY IS LIMITED TO DIRECT ACTUAL DAMAGES ONLY, SUCH DIRECT ACTUAL DAMAGES IS THE SOLE AND EXCLUSIVE REMEDY AND ALL OTHER REMEDIES OR DAMAGES AT LAW OR IN EQUITY ARE WAIVED.

THE VALUE OF ANY PRODUCTION TAX CREDITS DETERMINED ON AN AFTER-TAX BASIS, LOST DUE TO BUYER'S DEFAULT (WHICH SELLER HAS NOT BEEN ABLE TO MITIGATE AFTER USE OF REASONABLE EFFORTS) IF ANY, SHALL BE DEEMED DIRECT DAMAGES.

THE VALUE OF ANY INVESTMENT TAX CREDITS DETERMINED ON AN AFTER-TAX BASIS, LOST DUE TO BUYER'S DEFAULT (WHICH SELLER HAS NOT BEEN ABLE TO MITIGATE AFTER USE OF REASONABLE EFFORTS) IF ANY, SHALL BE DEEMED DIRECT DAMAGES.

UNLESS EXPRESSLY PROVIDED FOR IN THIS AGREEMENT, INCLUDING THE PROVISIONS OF SECTION 9.03, NEITHER PARTY SHALL BE LIABLE FOR CONSEQUENTIAL, INCIDENTAL, PUNITIVE, EXEMPLARY OR INDIRECT DAMAGES, LOST PROFITS OR OTHER BUSINESS INTERRUPTION DAMAGES, BY STATUTE, IN TORT OR CONTRACT, UNDER ANY INDEMNITY PROVISION OR OTHERWISE.

IT IS THE INTENT OF THE PARTIES THAT THE LIMITATIONS IMPOSED IN THIS ARTICLE SEVEN ON REMEDIES AND THE MEASURE OF DAMAGES BE WITHOUT REGARD TO THE CAUSE OR CAUSES RELATED THERETO, INCLUDING THE NEGLIGENCE OF ANY PARTY, WHETHER SUCH NEGLIGENCE BE SOLE, JOINT OR CONCURRENT, OR ACTIVE OR PASSIVE.

TO THE EXTENT ANY DAMAGES REQUIRED TO BE PAID UNDER THIS AGREEMENT ARE LIQUIDATED, THE PARTIES ACKNOWLEDGE THAT THE DAMAGES ARE DIFFICULT OR IMPOSSIBLE TO DETERMINE, OR OTHERWISE OBTAINING AN

ADEQUATE REMEDY IS INCONVENIENT AND THE DAMAGES CALCULATED UNDER THIS AGREEMENT CONSTITUTE A REASONABLE APPROXIMATION OF THE HARM OR LOSS.

NOTHING IN THIS ARTICLE SEVEN PREVENTS, OR IS INTENDED TO PREVENT BUYER FROM PROCEEDING AGAINST OR EXERCISING ITS RIGHTS WITH RESPECT TO ANY SECURED INTEREST IN COLLATERAL.

**** End of Article Seven ****

ARTICLE EIGHT. GOVERNMENTAL CHARGES

8.01 Cooperation to Minimize Tax Liabilities. Each Party shall use diligent efforts to implement the provisions of and to administer this Agreement in accordance with the intent of the Parties to minimize all taxes, so long as neither Party is materially adversely affected by such efforts.

8.02 Governmental Charges. Seller shall pay or cause to be paid all taxes imposed by any Governmental Authority on or with respect to the Generating Facility, Monthly Contract Payments made by Buyer to Seller, or the Power Product before the Delivery Point, including ad valorem taxes and other taxes attributable to the Generating Facility, the Site or land rights or interests in the Site or the Generating Facility ("Governmental Charges").

Buyer shall pay or cause to be paid all Governmental Charges on or with respect to the Power Product at and after the Delivery Point.

If Seller is required by Applicable Laws to remit or pay Governmental Charges which are Buyer's responsibility under this Agreement, Buyer shall promptly reimburse Seller for such Governmental Charges.

If Buyer is required by Applicable Law or regulation to remit or pay Governmental Charges which are Seller's responsibility under this Agreement, Buyer may deduct such amounts from payments to Seller made pursuant to Article Four.

If Buyer elects not to deduct such amounts from Seller's payments, Seller shall promptly reimburse Buyer for such amounts upon Notice from Buyer of the amount to be reimbursed.

Nothing shall obligate or cause a Party to pay or be liable to pay any Governmental Charges for which it is exempt under Applicable Laws.

8.03 Providing Information to Taxing Governmental Authorities. To the extent required by Applicable Law and subject to Section 9.09(b), each Party shall provide information concerning the Generating Facility to any requesting taxing Governmental Authority.

**** End of Article Eight ****

ARTICLE NINE. MISCELLANEOUS

9.01 Representations and Warranties. On the Effective Date, each Party represents, warrants, and covenants to the other Party that:

(a) It is duly organized, validly existing and in good standing under the laws of the jurisdiction of its formation;

(b) It has or will timely acquire all regulatory authorizations necessary for it to legally perform its obligations under this Agreement;

(c) The execution, delivery and performance of this Agreement are within its powers, have been duly authorized by all necessary action and do not violate any of the terms and conditions in its governing documents, any contracts to which it is a party or any Applicable Laws;

(d) This Agreement constitutes a legally valid and binding obligation enforceable against it in accordance with its terms, subject to any Equitable Defenses;

(e) There is not pending, or to its knowledge threatened against it or, in the case of Seller, any of its Affiliates, any legal proceeding that could materially adversely affect its ability to perform under this Agreement;

(f) No Event of Default with respect to it has occurred and is continuing and no such event or circumstance will occur as a result of its entering into or performing its obligations under this Agreement;

(g) It is acting for its own account, and its decision to enter into this Agreement is based upon its own judgment, not in reliance upon the advice or recommendations of the other Party and it is capable of assessing the merits of and understanding, and understands and accepts the terms, conditions and risks of this Agreement;

(h) It has not relied on any promises, representations, statements or information of any kind whatsoever that are not contained in this Agreement in deciding to enter into this Agreement; and

(i) It has entered into this Agreement in connection with the conduct of its business and it has the capacity or ability to provide or receive the Power Product as contemplated by this Agreement.

9.02 Additional Representations, Warranties, and Covenants by Seller. Seller represents, warrants and covenants to Buyer that:

(a) It will have Site Control as of the earlier of (i) the Term Start Date or (ii) any period before the Term Start Date to the extent necessary for Seller to perform its obligations under this Agreement and, in each case, will maintain Site Control throughout the Term;

(b) During the Term, it or its subcontractors will own or lease and Operate the Generating Facility unless otherwise agreed to by the Parties;

(c) It will deliver the Product to Buyer free and clear of all liens, security interests, Claims and encumbrances or any interest therein or thereto by any Person throughout the Term;

(d) It will hold throughout the Term the rights to all of the Product, subject to the terms of this Agreement;

(e) During the Term, it does not, and will not (1) convey, transfer, allocate, designate, award, report or otherwise provides any or all of the Product, or any portion thereof, or any benefits derived therefrom, to any party other than Buyer, or (2) start-up or Operate the Generating Facility per instruction of or for the benefit of any third party (except in order to satisfy the Site Host Load, or as required by other Applicable Laws);

(f) During the Term, the Generating Facility qualifies as an Eligible CHP Facility; and

(g) The Generating Facility meets all applicable greenhouse gas emissions standards, as such standards may change from time to time during the Term.

9.03 Indemnity.

(a) Each Party as indemnitor shall defend, save harmless and indemnify the other Party and the directors, officers, employees, and agents of such other Party against and from any and all loss, liability, damage, claim, cost, charge, demand, or expense (including any direct, indirect, or consequential loss, liability, damage, claim, cost, charge, demand, or expense, including reasonable attorneys' fees) for injury or death to Persons, including employees of either Party, and physical damage to property including property of either Party arising out of or in connection with the negligence or willful misconduct of the indemnitor relating to its obligations under this Agreement.

This indemnity applies notwithstanding the active or passive negligence of the indemnitee. However, neither Party is indemnified under this Agreement for its loss, liability, damage, claim, cost, charge, demand or expense to the extent resulting from its negligence or willful misconduct.

(b) Each Party releases and shall defend, save harmless and indemnify the other Party from any and all loss, liability, damage, claim, cost, charge, demand or expense arising out of or in connection with any breach made by the indemnifying Party of its representations, warranties and covenants in Section 9.01 and Section 9.02.

(c) The provisions of this Section 9.03 may not be construed to relieve any insurer of its obligations to pay any insurance Claims in accordance with the provisions of any valid insurance policy.

(d) Notwithstanding anything to the contrary in this Agreement, if Seller fails to comply with the provisions of Sections 3.20(a)(v) or 9.10, Seller shall, at its own cost, defend, save harmless and indemnify Buyer, its directors, officers, employees, and agents, assigns, and successors in interest, from and against any and all loss, liability, damage, claim, cost, charge, demand, or expense of any kind or nature (including any direct, indirect, or consequential loss, damage, claim, cost, charge, demand, or expense, including reasonable attorneys' fees and other costs of litigation), resulting from injury or death to any person or damage to any property, including the personnel or property of Buyer, to the extent that Buyer would have been protected had Seller complied with all of the provisions of Sections 3.20(a)(v) and 9.10.

The inclusion of this Section 9.03(d) is not intended to create any express or implied right in Seller to elect not to provide the insurance required under Section 9.10.

(e) Each Party shall defend, save harmless and indemnify the other Party against any Governmental Charges for which such indemnifying Party is responsible under Article Eight.

(f) Seller shall defend, save harmless and indemnify Buyer against any penalty imposed upon Buyer as a result of Seller's failure to fulfill its obligations regarding Resource Adequacy Benefits as set forth in Sections 3.01 and 3.02.

(g) Seller is solely responsible for any NERC Standards Non-Compliance Penalties arising from or relating to Seller's failure to perform the Generator Operator Obligations or the Generator Owner Obligations for which Seller is responsible, in accordance with Section 3.21, and will indemnify, defend and hold Buyer harmless from and against all liabilities, damages, Claims, losses, and reasonable costs and expenses (which shall include reasonable costs and expenses of outside or in-house counsel) incurred by Buyer arising from or relating to Seller's actions or inactions that result in NERC Standards Non-Compliance Penalties or an attempt by any Governmental Authority, Person to assess such NERC Standards Non-Compliance Penalties against Buyer. Buyer will indemnify, defend and hold Seller harmless from and against all liabilities, damages, Claims, losses and reasonable costs and expenses (which shall include reasonable costs of outside and in-house counsel) incurred by Seller for any NERC Standards Non-Compliance Penalties to the extent they are due to Buyer's negligence or willful misconduct in performing its role as Seller's Scheduling Coordinator during the Term.

(h) All indemnity rights will survive the termination of this Agreement for twelve (12) months.

9.04 Assignment. Neither Party may assign this Agreement or its rights under this Agreement without the prior written consent of the other Party, which consent may not be unreasonably withheld or delayed. Any direct or indirect change of control of either Party (whether voluntary or by operation of law) will be deemed an assignment and will require the prior written consent of the other Party, which consent will not be unreasonably withheld. Notwithstanding anything to the contrary in this Section 9.04, Seller may, without the consent of Buyer (and without relieving itself from liability hereunder):

(a) Transfer, sell, pledge, encumber or assign this Agreement or the accounts, revenues or proceeds hereof in connection with any financing or other financial arrangements in accordance with Section 9.05; and

(b) Transfer or assign this Agreement to an Affiliate of Seller which Affiliate's creditworthiness is equal to or higher than that of Seller.

9.05 Consent to Collateral Assignment. Subject to the provisions of this Section 9.05, Seller has the right to assign this Agreement as collateral to a Lender for any financing or refinancing of the Generating Facility, including a Sale-Leaseback Transaction or Equity Investment and, in connection therewith, Buyer shall in good faith work with Seller and Lender to agree upon a consent to a collateral assignment of this Agreement or to a Sale-Leaseback Transaction or Equity Investment, as applicable ("Collateral Assignment Agreement").

The Collateral Assignment Agreement shall be in form and substance reasonably agreed to by Buyer, Seller and Lender, and shall include, among others, the following provisions (together with such other commercially reasonable provisions required by any Lender that are reasonably acceptable to Buyer):

(a) Buyer shall give, to the Person(s) to be specified by Lender in the Collateral Assignment Agreement, simultaneously with the Notice to Seller and before exercising its right to terminate this Agreement, written Notice of any event or circumstance known to Buyer which would, if not cured within the applicable cure period specified in Article Six, constitute an Event of Default (an "Incipient Event of Default");

(b) Lender shall have the right to cure an Incipient Event of Default or an Event of Default by Seller in accordance with the same provisions of this Agreement as apply to Seller;

(c) Following an Event of Default by Seller under this Agreement, Buyer may require Seller to (although Lender may, but shall have no obligation, subject to 9.05(g)) provide to Buyer a report concerning:

(i) The status of efforts by Seller or Lender to develop a plan to cure the Event of Default;

(ii) Impediments to the cure plan or its development;

(iii) If a cure plan has been adopted, the status of the cure plan's implementation (including any modifications to the plan as well as the expected timeframe within which any cure is expected to be implemented); and

(iv) Any other information which Buyer may reasonably require related to the development, implementation and timetable of the cure plan;

(d) Seller or Lender shall provide the report to Buyer within 10 Business Days after Notice from Buyer requesting the report. Buyer shall have no further right to require the report with respect to a particular Event of Default after that Event of Default has been cured;

(e) Lender shall have the right to cure an Event of Default or Incipient Event of Default on behalf of Seller, only if Lender sends a written notice to Buyer before the end of any cure period indicating Lender's intention to cure. Lender may remedy or cure the Event of Default or Incipient Event of Default within the cure period under this Agreement. Such cure period for Lender shall be extended for each day Buyer does not provide the Notice to Lender referred to in Section 9.05(a). In addition, such cure period may, in Buyer's reasonable discretion, be extended by no more than an additional one hundred and eighty (180) days. If possession of the Generating Facility is necessary to cure such Incipient Event of Default or Event of Default, Lender has commenced foreclosure proceedings within sixty (60) days after receipt of such Notice from Buyer, and Lender is making diligent and consistent efforts to complete such foreclosure, take possession of the Generating Facility and promptly cure the Incipient Event of Default or Event of Default, Lender or its designee(s) or assignee(s) will be allowed a reasonable period of time to complete such foreclosure proceedings, take possession of the Generating Facility and cure such Incipient Event of Default or Event of Default, not to exceed one hundred and eighty (180) days after Lender's commencement of foreclosure. Additionally, if Lender is prohibited from curing any Incipient Event of Default or Event of Default by any process, stay or injunction issued by a Governmental Authority or pursuant to any bankruptcy, insolvency or similar proceedings, then the time period for curing such Incipient Event of Default or Event of Default shall be extended for the period of the prohibition provided that Lender is exercising reasonable diligence in having such process, stay or injunction removed;

(f) Lender shall have the right to consent before any termination of this Agreement which does not arise out of an Event of Default or the end of the Term;

(g) Lender shall receive prior Notice of, and shall have the right to approve material amendments to this Agreement, which approval may not be unreasonably withheld, delayed or conditioned;

(h) In the event Lender, directly or indirectly, takes title to the Generating Facility (including title by foreclosure or deed in lieu of foreclosure), the Person taking title to the Generating Facility shall assume all of Seller's obligations arising under this Agreement and all related agreements (subject to such limits on liability as are mutually agreed to by Seller, Buyer and Lender as set forth in the Collateral Assignment Agreement); *provided*, *however*, that Lender (or such Person) shall have no liability for any monetary obligations of Seller under this Agreement which are due and owing to Buyer as of the assumption date (but this provision may not be interpreted to limit Buyer's rights to proceed against Seller as a result of an Event of Default) and Lender's (or such Person's) liability to Buyer after such assumption shall be limited to its interest in the Generating Facility; *provided further*, that before such assumption, if Buyer advises Lender (or such Person) that Buyer will require that Lender (or such Person) cure (or cause to be cured) one or more monetary or non-monetary Incipient Event(s) of Default or Event(s) of Default existing as of the date such Person takes title in order to avoid the exercise by Buyer (in its sole discretion) of Buyer's right to terminate this Agreement with respect to such Incipient Event(s) of Default or Event(s) of Default, then Lender (or such Person) at its option and in its sole discretion may elect to either (i) cause such Incipient Event(s) of Default or Event of Default to be cured, or (ii) not assume this Agreement;

(i) If Lender has assumed this Agreement as provided in Section 9.05(h) and elects to sell or transfer the Generating Facility (after Lender directly or indirectly, takes title to the Generating Facility), or sale of the Generating Facility occurs through the actions of Lender or an agent of or representative of Lender (excluding any foreclosure sale where a third party other than Lender, Seller, an Affiliate of Lender or an Affiliate of Seller is the buyer), then Lender must cause the transferee or buyer to assume all of Seller's obligations arising under this Agreement and all related agreements as a condition of the sale or transfer excluding, however, a foreclosure (unless the transferee or buyer is Lender, Seller, an Affiliate of Lender or an Affiliate of Seller). Lender shall be released from all further obligations under the Agreement and all related documents following such assumption. Such sale or transfer (excluding a foreclosure) may be made only to a Person reasonably acceptable to Buyer; and

(j) If this Agreement is rejected in Seller's Bankruptcy or otherwise terminated in connection therewith and if Lender or its representative or designee, directly or indirectly, takes title to the Generating Facility, then, at the request of either Buyer or Lender, Buyer and Lender (or its designee or representative) shall promptly enter into a new agreement, wherein Buyer shall have substantially the same contractual rights as found in this Agreement for the term that would have been remaining under this Agreement, provided that Lender's (or its designee's

or representative's) liability under such new agreement shall be limited to its interest in the Generating Facility and neither Lender (or its designee or representative) nor Buyer shall have any personal liability to the other for any amounts owing and neither Buyer nor Lender (or its designee or representative) shall have any obligation to cure any defaults under the original Agreement that was rejected in, or otherwise terminated in connection with Seller's Bankruptcy.

9.06 Governing Law and Jury Trial Waiver. THIS AGREEMENT AND THE RIGHTS AND DUTIES OF THE PARTIES HEREUNDER ARE GOVERNED BY AND CONSTRUED, ENFORCED AND PERFORMED IN ACCORDANCE WITH THE LAWS OF THE STATE OF CALIFORNIA, WITHOUT REGARD TO PRINCIPLES OF CONFLICTS OF LAW. TO THE EXTENT ENFORCEABLE AT SUCH TIME, EACH PARTY WAIVES ITS RESPECTIVE RIGHT TO ANY JURY TRIAL WITH RESPECT TO ANY LITIGATION ARISING UNDER OR IN CONNECTION WITH THIS AGREEMENT.

9.07 Notices. All notices, requests, statements or payments shall be made as specified in Exhibit J. Notices (other than Forecasts and Scheduling requests) shall, unless otherwise specified in this Agreement, be in writing and may be delivered by hand delivery, first class United States mail, overnight courier service, electronic transmission or facsimile. Notices provided in accordance with this Section 9.07 are deemed given as follows:

(a) Notice by facsimile, electronic transmission or hand delivery is deemed given at the close of business on the day actually received, if received during business hours on a Business Day, and otherwise are deemed given at the close of business on the next Business Day;

(b) Notice by overnight first class United States mail or overnight courier service is deemed given on the next Business Day after such Notice is sent out;

(c) Notice by first class United States mail is deemed given two (2) Business Days after the postmarked date;

(d) Notices are effective on the date deemed given, unless a different date for the Notice to go into effect is stated in another section of this Agreement;

(e) A Party may change its designated representatives, addresses and other contact information by providing notice of same in accordance herewith; and

(f) All notices, requests, statements or payments for this Generating Facility must reference the identification number set forth on the cover page of this Agreement.

9.08 General.

(a) This Agreement supersedes all prior agreements, whether written or oral, between the Parties with respect to its subject matter and constitutes the entire agreement between the Parties relating to its subject matter.

(b) This Agreement will not be construed against any Party as a result of the preparation, substitution, submission or other event of negotiation, drafting or execution hereof.

(c) Except to the extent provided for in this Agreement, no amendment or modification to this Agreement is enforceable unless reduced to a writing signed by all Parties.

(d) If any provision of this Agreement is held invalid or unenforceable by any court of competent jurisdiction, the other provisions of this Agreement will remain in full force and effect. Any provision of this Agreement held invalid or unenforceable only in part or degree will remain in full force and effect to the extent not held invalid or unenforceable.

(e) Waiver by a Party of any default by the other Party will not be construed as a waiver of any other default.

(f) The term "including" when used in this Agreement is by way of example only and will not be considered in any way to be in limitation.

(g) The word "or" when used in this Agreement includes the meaning "and/or" unless the context unambiguously dictates otherwise.

(h) The headings used in this Agreement are for convenience and reference purposes only and will not affect its construction or interpretation. All references to "Articles", "Sections" and "Exhibits" refer to the corresponding Articles, Sections and Exhibits of this Agreement. Unless otherwise specified, all references to "Articles" or "Sections" in Exhibits A through N refer to the corresponding Articles and Sections in the main body of this Agreement. Words having well-known technical or industry meanings have such meanings unless otherwise specifically defined in this Agreement.

(i) Where days are not specifically designated as Business Days, they are calendar days. Where years are not specifically designated as Term Years, they are calendar years.

(j) This Agreement will apply to, be binding in all respects upon and inure to the benefit of the successors and permitted assigns of the Parties. Nothing in this Agreement will be construed to give any Person other than the Parties any legal or equitable right, remedy or claim under or with respect to this Agreement or any

provision of this Agreement, except as shall inure to a successor or permitted assignee.

(k) No provision of this Agreement is intended to contradict or supersede any applicable agreement between the Parties covering transmission, distribution, metering, scheduling or interconnection of electric energy. In the event of an apparent contradiction between this Agreement and any such agreement, the applicable agreement controls.

(l) Whenever this Agreement specifically refers to any law, tariff, government department or agency, regional reliability council, Transmission Provider, or credit rating agency, the Parties agree that the reference also refers to any successor to such law, tariff or organization.

(m) The Parties acknowledge and agree that this Agreement and the transactions contemplated by this Agreement constitute a "forward contract" within the meaning of the United States Bankruptcy Code and that Buyer and Seller are each "forward contract merchants" within the meaning of the United States Bankruptcy Code.

(n) This Agreement may be executed in one or more counterparts, each of which will be deemed to be an original of this Agreement and all of which, when taken together, will be deemed to constitute one and the same agreement. The exchange of copies of this Agreement and of signature pages by facsimile transmission, an Adobe Acrobat file or by other electronic means constitutes effective execution and delivery of this Agreement as to the Parties and may be used in lieu of the original Agreement for all purposes. Signatures of the Parties transmitted by facsimile or by other electronic means will be deemed to be their original signatures for all purposes.

(o) Each Party reserves all rights, claims and defenses with respect to this Agreement, the AB1613 Decisions, and any application for rehearing, petition for modification, petition for declaratory order, or appeal filed with respect to such decisions.

9.09 Confidentiality.

(a) Neither Party shall disclose any Confidential Information to a third party, other than:

(i) To such Party's employees, Lenders, investors, attorneys, accountants or advisors who have a need to know such information and have agreed to keep such terms confidential;

(ii) To potential Lenders with the consent of Buyer, which consent will not be unreasonably withheld; *provided*, *however*, that disclosure (1) of cash flow and other financial projections to any potential Lender or investor in

connection with a potential loan or tax equity investment; or (2) to potential Lenders or investors with whom Seller has negotiated (but not necessarily executed) a term sheet or other similar written mutual understanding, will not require such consent of Buyer; *provided further*, that in each case such potential Lender or investor has a need to know such information and has agreed to keep such terms confidential;

(iii) To Buyer's Procurement Review Group, as defined in D.02-08-071, subject to a protective order applicable to Buyer's Procurement Review Group;

(iv) With respect to Confidential Information other than nonpublic financial information of Seller supplied to Buyer pursuant to Section 3.20, the CPUC, the CEC or the FERC, under seal for any regulatory purpose, including policymaking, but only provided that the confidentiality protections from the CPUC under Section 583 of the California Public Utilities Code or other statute, order or rule offering comparable confidentiality protection are in place before the communication of such Confidential Information;

(v) In order to comply with any Applicable Law or any exchange, Control Area or CAISO rule, or order issued by a court or entity with competent jurisdiction over the disclosing party, other than to those entities set forth in Section 9.09(a)(vi);

(vi) In order to comply with any Applicable Law, including applicable regulation, rule, subpoena, or order of the CPUC, CEC, FERC, any court, administrative agency, legislative body or other tribunal, or any discovery or data request of the CPUC; and

(vii) To representatives of a Party's credit ratings agencies who have a need to review the terms and conditions of this Agreement for the purpose of assisting the Party in evaluating this Agreement for credit rating purposes or with respect to the potential impact of this Agreement on the Party's financial reporting obligations, in each case subject to confidentiality restrictions no less stringent than as set forth in this Agreement.

(b) In connection with requirements, requests or orders to produce documents or information in the circumstances provided in Sections 8.03 and 9.09(a)(vi) (all to be considered a "Disclosure Order") each Party shall, to the extent practicable, use reasonable efforts to (i) notify the other Party before disclosing the confidential information, and (ii) prevent or limit such disclosure. After using such reasonable efforts, the disclosing party may not be (x) prohibited from complying with a Disclosure Order, or (y) liable to the other Party for monetary or other damages incurred in connection with the disclosure of any terms or conditions of this Agreement which are the subject of such Disclosure Order.

(c) Except as provided in clause (y) of Section 9.09(b), the Parties are entitled to all remedies available at law or in equity to enforce, or seek relief in connection with, the confidentiality obligations set forth in this Section 9.09.

(d) This Section 9.09 shall remain in effect for three (3) years following the termination of this Agreement.

9.10 Insurance.

(a) Seller shall, at its own expense and at all times from the Effective Date until the Term End Date, maintain in effect the following insurance policies and minimum limits of coverage (and such additional coverage as may be required by Applicable Law), in each case with insurance companies authorized to do business in California having an A.M. Best's Insurance Rating of A minus: VII or better:

(i) Workers' compensation insurance, with statutory limits as required by California;

(ii) Employer's liability insurance, with at least the following limits: (1) bodily injury by accident - $1,000,000 each accident; (2) bodily injury by disease - $1,000,000 policy limit; and (3) bodily injury by disease - $1,000,000 each employee;

(iii) Commercial general liability insurance, written on an "occurrence" (not a claims-made) basis, covering all operations by or on behalf of Seller arising out of or connected with this Agreement. This commercial general liability insurance must (1) bear a combined single limit per occurrence and annual aggregate of not less than $1,000,000, exclusive of defense costs, for all coverages, (2) contain standard cross-liability or severability of interest provisions, and (3) contain no explosion, collapse, or underground exclusion.

(iv) Commercial automobile liability insurance, covering bodily injury and property damage with a combined single limit of not less than $1,000,000 per occurrence. This commercial automobile liability insurance must cover liability arising out of the use of all owned, non-owned and hired automobiles.

(v) Excess liability insurance, written on an "occurrence" (not claims-made) basis and providing coverage excess of the underlying employer's liability, commercial general liability and commercial automobile liability insurance, on terms at least as broad as the underlying coverage with limits of not less than $4,000,000 per occurrence and in the annual aggregate.

(b) The insurance required in this Section 9.10 applies as primary insurance to, without a right of contribution from, any other insurance maintained by or afforded to Buyer, its subsidiaries and parent company, and their respective officers, directors, shareholders, agents, and employees, despite of any provision in Seller's insurance to the contrary. Carriers furnishing the required insurance must waive all rights of recovery from or subrogation against Buyer, its subsidiaries and parent company, and their respective officers, directors, shareholders, agents, employees and insurers. The insurance required in Section 9.10(a) must name Buyer, its subsidiaries and parent company, and their respective officers, directors, shareholders, agents and employees additional insureds with respect to all third party liabilities arising out of Seller's construction, use or ownership of the Generating Facility. The insurance required in this Section 9.10 may be provided by any combination of Seller's primary and excess liability policies.

(c) Within 30 days of the Effective Date, and within a reasonable time after coverage is renewed or replaced, Seller shall furnish to the Buyer certificates of insurance in forms reasonably acceptable to Buyer, establishing that Seller's policies provide the coverage and limits of insurance required under this Section 9.10 and that these policies will be in full force and effect as of the Effective Date, continuing until the end of the Term. Seller's insurance obtained in accordance with this Section 9.10 may only be terminated, expire or materially altered upon 30 days' prior Notice to Buyer.

(d) If any of the required insurance coverages contain aggregate limits applying to other operations of Seller outside of this Agreement, and such limits are diminished by any incident, occurrence, claim, settlement or judgment against such insurance, Seller shall take immediate steps to restore such aggregate limits or shall provide other insurance protection for such aggregate limits.

(e) If Seller fails to comply with any of the provisions of this Section 9.10, Seller shall, among other things and without restricting Buyer's remedies under the law or otherwise, at its own cost, defend, indemnify and hold harmless Buyer, its subsidiaries and parent company, and their respective officers, directors, shareholders, agents, and employees, from and against any and all liability, damages, losses, claims, demands, actions, causes of action, costs, including attorney's fees and expenses, or any of them, resulting from the death or injury to any person or damage to any property to the extent that Buyer would have been protected had Seller complied with all of the provisions of this Section. Nothing in this Section 9.10(e) affects or diminishes Seller's obligation to indemnify SCE under any other section of this Agreement.

9.11 Nondedication. Notwithstanding any other provisions of this Agreement, neither Party dedicates any of the rights that are or may be derived from this Agreement or any part of its facilities involved in the performance of this Agreement to the public or to the service

provided under this Agreement, and such service shall cease upon termination of this Agreement.

9.12 Mobile Sierra. Notwithstanding any provision of this Agreement, neither Party will seek, nor will they support any third party in seeking, to prospectively or retroactively revise the rates, terms, or conditions of service of this Agreement through application or complaint to FERC pursuant to the provisions of Section 205, 206, or 306 of the Federal Power Act, or any other provisions of the Federal Power Act, absent prior written agreement of the Parties.

Further, absent the prior agreement in writing by both Parties, the standard of review for changes to the rates, terms or conditions of service of this Agreement proposed by a Party, a non-Party or the FERC acting *sua sponte* shall be the "public interest" standard of review set forth in United Gas Pipe Line Co. v. Mobile Gas Service Corp., 350 US 332 (1956) and Federal Power Commission v. Sierra Pacific Power Co., 350 US 348 (1956).

9.13 Seller Ownership and Control of Generating Facility. Seller agrees, that, in accordance with FERC Order No. 697, upon request of Buyer, Seller shall submit a letter of concurrence in support of an affirmative statement by Buyer that the contractual arrangement set forth in this Agreement does not transfer "ownership or control of generation capacity" from Seller to Buyer as the term "ownership or control of generation capacity" is used in 18 CFR Section 35.42. Seller also agrees that it will not, in filings, if any, made subject to Order Nos. 652 and 697, claim that the contractual arrangement set forth in this Agreement conveys ownership or control of generation capacity from Seller to Buyer.

9.14 Simple Interest Payments. Except as specifically provided in this Agreement, any outstanding and past due amounts owing and unpaid by either Party under the terms of this Agreement shall be eligible to receive a Simple Interest Payment calculated using the Interest Rate for the number of days between the date due and the date paid.

9.15 Payments. Payments to be made under this Agreement shall be made, at Seller's option, by check or electronic wire funds transfer.

9.16 Provisional Relief. The Parties acknowledge and agree that irreparable damage would occur if certain provisions of this Agreement are not performed in accordance with the terms hereof, that money damages would not be a sufficient remedy for any breach of such provisions of this Agreement, and that the Parties shall be entitled, without the requirement of posting a bond or the other security, to seek a preliminary injunction, temporary restraining order, or other provisional relief as a remedy for a breach of Sections 3.01, 3.02, 3.04, 9.09 and Section 4(e) of Exhibit D in any court of competent jurisdiction, notwithstanding the obligation to submit all other disputes (including all Claims for monetary damages under this Agreement) to arbitration pursuant to Section 10.01. The Parties further acknowledge and agree that the results of such arbitration may be rendered ineffectual without such provisional relief.

(f) Each Party is allowed a maximum of three expert witnesses, excluding rebuttal experts;

(g) Within sixty (60) days after the initial disclosure, or at such other time as the Arbitrator may order, the Parties shall exchange a list of all experts upon which they intend to rely at the arbitration proceeding;

(h) Within thirty (30) days after the initial expert disclosure, the Parties may designate a maximum of two rebuttal experts;

(i) Unless the Parties agree otherwise, all direct testimony will be in form of affidavits or declarations under penalty of perjury; and

(j) Each Party shall make available for cross-examination at the arbitration hearing its witnesses whose direct testimony has been so submitted.

Subject to Article Seven, the Arbitrator will have the authority to grant any form of equitable or legal relief a Party might recover in a court action. The Parties acknowledge and agree that irreparable damage would occur in the event certain provisions of this Agreement are not performed in accordance with the terms hereof, that money damages would not be a sufficient remedy for any breach of such provisions of this Agreement, and that the Parties shall be entitled, without the requirement of posting a bond or other security, to specific performance and injunctive or other equitable relief as a remedy for a breach of Sections 3.01, 3.02, 3.04, 9.09 or Section 4(e) of Exhibit D.

Judgment on the award may be entered in any court having jurisdiction.

The Arbitrator must, in any award, allocate all of the costs of the binding arbitration (other than each Party's individual attorneys' fees and costs related to the Party's participation in the arbitration, which fees and costs will be borne by such Party), including the fees of the Arbitrator and any expert witnesses, against the Party who did not prevail.

Until such award is made, however, the Parties will share equally in paying the costs of the arbitration.

**** End of Article Ten ****

IN WITNESS WHEREOF, the Parties have caused this Agreement to be duly executed by their respective authorized representatives as of the Effective Date.

HOUWELING NURSERIES OXNARD, INC.,
a California corporation

By: _____
Name: Casey Houweling
Title: President

SOUTHERN CALIFORNIA EDISON COMPANY,
a California corporation

By: _____
Name: Steven Eisenberg
Title: VP Energy Contracts

EXHIBIT A
Definitions

For purposes of this Agreement, the following terms and variations thereof have the meanings specified or referred to in this Exhibit A:

"AB1613 Decisions" means the CPUC Decisions issued in R. 08-06-024.

"Act" has the meaning set forth in Recital A.

"Affiliate" means, with respect to a Party, any Person that, directly or indirectly, through one or more intermediaries, controls, or is controlled by, or is under common control with such Party. For purposes of this Agreement, "control" means the direct or indirect ownership of 50% or more of the outstanding capital stock or other equity interests having ordinary voting power.

"Agreement" has the meaning set forth in the Preamble.

"Ambient Conditions" means reductions in capacity due to that status of, or variations in, Site Host Load or ambient weather conditions.

"Applicable Laws" means all constitutions, treaties, laws, ordinances, rules, regulations, interpretations, permits, judgments, decrees, injunctions, writs and orders of any Governmental Authority or arbitrator that apply to either or both of the Parties, the Generating Facility or the terms of this Agreement.

"Applicable QF 20MW Settlement Contract Payment Provisions" means all provisions of the QF 20MW Settlement Contract which refer or relate to payment, including, without limitation, Section 1.06 of the QF 20MW Settlement Contract, Article 4 of the QF 20MW Settlement Contract and all other provisions of the QF 20MW Settlement Contract which are referenced in such provisions, used in connection with the application of such provisions or related to Buyer being able to comply with such provisions, including without limitation, all defined terms set forth in the QF 20MW Settlement Contract, and all exhibits to the QF 20MW Settlement Contract which are referenced in such provisions, used in connection with the application of such provisions or related to Buyer being able to comply with such provisions.

"Arbitrator" has the meaning set forth in Article Ten.

"As-Available Contract Capacity" means the electric energy generating capacity that Seller provides on an as-available basis for the Power Product, as set forth in Section 1.02(c).

"Availability Incentive Payments" has the meaning set forth in the CAISO Tariff.

"Availability Standards" means the standards set forth in the CAISO Tariff setting forth criteria for determining if a Resource Adequacy Resource is subject to Non-Availability Charges or Availability Incentive Payments under the CAISO Tariff.

"Average Higher Heating Value MPR Heat Rate" means the heat rate equal to 6,924 Btu/kWh, or 6.924 mmbtu/MWh, per CPUC Resolution E-4298, which heat rate will be modified in this Agreement if there is any modification thereto by the CPUC or other authorized Governmental Authority.

"Bankrupt" means with respect to any Person, such Person:

(a) Files a petition or otherwise commences, authorizes or acquiesces in the commencement of a proceeding or cause of action under any bankruptcy, insolvency, reorganization or similar law, or has any such petition filed or commenced against it (which petition is not dismissed within ninety (90) days);

(b) Makes an assignment or any general arrangement for the benefit of creditors;

(c) Otherwise becomes bankrupt or insolvent (however evidenced);

(d) Has a liquidator, administrator, receiver, trustee, conservator or similar official appointed with respect to it or any substantial portion of its property or assets; or

(e) Is generally unable to pay its debts as they fall due.

"Business Day" means any day except a Saturday, Sunday, the Friday after the United States Thanksgiving holiday, or a Federal Reserve Bank holiday that begins at 8:00 a.m. and ends at 5:00 p.m. local time for the Party sending a Notice or payment or performing a specified action.

"Buyer" has the meaning set forth in the Preamble.

"Buyer Energy Schedule" means the schedule of electric energy that Buyer submits to the CAISO for electric energy produced by the Generating Facility.

"Buyer Parent Energy Schedule" means the schedule of electric energy that Buyer submits to the CAISO for electric energy delivered to the CAISO for the CAISO Global Resource ID associated with the Generating Facility.

"Buyer Projected Energy Forecast" has the meaning set forth in Section 2(a) of Exhibit E.

"CAISO" means the California Independent System Operator Corporation or successor entity that dispatches certain generating units, supplies certain loads and controls the transmission facilities of entities that (a) own, operate and maintain transmission lines and associated facilities or have entitlements to use certain transmission lines and associated facilities, and (b) have transferred to the CAISO or its successor entity operational control of such facilities or entitlements.

"CAISO-Approved Meter" means any revenue quality, electric energy measurement meter furnished by Seller, that (a) is designed, manufactured and installed in accordance with the CAISO's metering requirements, or, to the extent that the CAISO's metering requirements do not apply, Prudent Electrical Practices, and (b) includes all of the associated metering

transformers and related appurtenances that are required in order to measure the net electric energy output from the Generating Facility.

"CAISO-Approved Quantity" means the total quantity of electric energy that Buyer Schedules with the CAISO and the CAISO approves in its final schedule, which is published in accordance with the CAISO Tariff.

"CAISO Charges" means the debits, costs, fees, penalties, sanctions, interest or similar charges, including imbalance energy charges, that are directly assigned by the CAISO to the CAISO Global Resource ID for the Generating Facility for, or attributable to, Scheduling, Availability Standards or deliveries from the Generating Facility under this Agreement.

"CAISO Charges Invoice" has the meaning set forth in Section 5 of Exhibit E.

"CAISO-Controlled Grid" has the meaning set forth in the CAISO Tariff.

"CAISO Declared Over-Generation Condition" means a CAISO declared condition on the CAISO-Controlled Grid where the sum of the desired generation output of all of Scheduling Coordinators in the Control Area, absent mitigation, would be greater than the system load.

"CAISO Forced Outage Report" means a complete copy of a forced outage report in a form reasonably acceptable to Buyer which includes detailed information regarding the event, including the affected Generating Unit, outage start date and time, estimation of outage duration, MW unavailable and summary of work to be performed.

"CAISO Global Resource ID" means the number or name assigned by the CAISO to the CAISO-Approved Meter.

"CAISO Revenues" means the credits, fees, payments, revenues, interest or similar benefits, including imbalance energy payments, that are directly assigned by the CAISO to the CAISO Global Resource ID for the Generating Facility for, or attributable to, Scheduling or deliveries from the Generating Facility under this Agreement.

"CAISO Station Power Protocol" means the CAISO protocol that the CAISO filed with the FERC in Docket ER05-849, including all revisions, amendments and successor protocols that would allow a generating facility to self-supply its Station Power (as defined in the CAISO Tariff) by any means other than permitted netting, when permitted netting allows netting of generator output with Station Power load that is electrically connected to the generator at the same time when the generator is on-line.

"CAISO Tariff" means the California Independent System Operator Corporation Operating Agreement and Tariff, including the rules, protocols, procedures and standards attached thereto, as the same may be amended or modified from time to time and approved by the FERC.

"Capacity Attributes" means any and all current or future defined characteristics, certificates, tag, credits, ancillary service attributes, or accounting constructs, howsoever entitled, other than

Resource Adequacy Benefits, attributed to or associated with the electricity generating capability of the Generating Facility.

"CEC" means the California Energy Commission, or any successor entity.

"Check Meter" means the Buyer revenue-quality meter section or meter(s), which Buyer may furnish at its discretion, as set forth in Section 3.09(b) and will include those devices normally supplied by Buyer or Seller under the applicable utility electric service requirements.

"CHP" means combined heat and power.

"Claiming Party" has the meaning set forth in Section 5.02.

"Claims" means all third party claims or actions, threatened or filed and, whether groundless, false, fraudulent or otherwise, that directly or indirectly relate to the subject matter of an indemnity, and the resulting losses, damages, expenses, attorneys' fees and court costs, whether incurred by settlement or otherwise, and whether such claims or actions are threatened or filed before or after the termination of this Agreement.

"Collateral Assignment Agreement" has the meaning set forth in Section 9.05.

"Confidential Information" means all oral or written communications exchanged between the Parties on or after the Effective Date relating to the implementation of this Agreement, including information related to Seller's compliance with operating and efficiency standards applicable to an Eligible CHP Facility. Confidential Information does not include (i) information which is in the public domain as of the Effective Date or which comes into the public domain after the Effective Date from a source other than from the other Party, (ii) information which either Party can demonstrate in writing was already known to such Party on a non-confidential basis before the Effective Date, (iii) information which comes to a Party from a bona fide third-party source not under an obligation of confidentiality, or (iv) information which is independently developed by a Party without use of or reference to Confidential Information or information containing Confidential Information.

"Control Area" means the electric power system (or combination of electric power systems) under the operational control of the CAISO or any other electric power system under the operational control of another organization vested with authority comparable to that of the CAISO.

"Costs" means, with respect to the Non-Defaulting Party, brokerage fees, commissions, legal expenses and other similar third party transaction costs and expenses reasonably incurred by such Party in entering into any new arrangement which replaces this Agreement.

"CPUC" means the California Public Utilities Commission, or any successor entity.

"Credit Rating" means with respect to any Person, on the relevant date of determination, the respective ratings then assigned to such Person's unsecured, senior long-term debt or deposit obligations (not supported by third party credit enhancement) by S&P or Moody's. If no rating

is assigned to such Person's unsecured, senior long-term debt or deposit obligation by either S&P or Moody's, then "Credit Rating" shall mean the general corporate credit rating or long-term issuer rating assigned to the Person by S&P or Moody's, as the case may be.

"Cross Default Amount" is the amount set forth in Section 1.06(f).

"Daily Delay Liquidated Damages" has the meaning set forth in Section 4(c)(ii) of Exhibit D.

"Day-Ahead" has the meaning set forth in the CAISO Tariff.

"Defaulting Party" has the meaning set forth in Section 6.01(a).

"Delivery Point" has the meaning set forth in Section 1.03.

"Development Security" has the meaning set forth in Section 4(b)(i) of Exhibit D.

"Direct GHG Compliance Costs" mean any taxes, charges or fees imposed by an authorized Governmental Authority with jurisdiction over the Seller or the Generating Facility, and levied directly on the Generating Facility for GHG emissions attributable to its Operations.

"Disclosure Order" has the meaning set forth in Section 9.09(b).

"Dispute" has the meaning set forth in Section 10.01.

"Early Termination Date" has the meaning set forth in Section 6.02(a).

"Effective Date" has the meaning set forth in the Preamble.

"Eligible CHP Facility" means a facility, as defined by Public Utilities Code Section 2840.2, subdivisions (a) and (b) that, (1) meets the guidelines established by the California Energy Commission pursuant to Public Utilities Code § 2843, and (2) meets the requirements of 18 Code of Federal Regulations § 292.201, et seq., unless Seller is a public agency exempt from FERC jurisdiction under United States Code § 824(f).

"Emergency" means an actual or imminent condition or situation which:

(a) Is defined and declared by the CAISO or Transmission Provider;

(b) Jeopardizes the integrity or reliability of the CAISO-Controlled Grid or Transmission Provider's electric system;

(c) Requires automatic or immediate manual action to prevent or limit loss of load or generation supply; or

(d) Poses a threat to public safety.

"Equitable Defense" means any Bankruptcy or other laws affecting creditors' rights generally, and with regard to equitable remedies, the discretion of the court before which proceedings to obtain same may be pending.

"Equity Investment" means an acquisition by a Lender of an ownership interest, in the form of stock, membership or partnership interest, in Seller or the immediate parent of Seller under which Seller retains the right to act in all matters relating to the control and Operation of the Site and the Generating Facility for the Term, subject to Lender's rights to enforce its ownership interest in Seller or the immediate parent of Seller, as applicable, in the event of a default by Seller or the immediate parent of Seller under Lender's equity acquisition agreement or the partnership agreement, operating agreement, or other agreement governing the relationship between the equity owners of the Generating Facility.

"Event of Default" has the meaning set forth in Section 6.01.

"Existing Eligible CHP Facility" means an Eligible CHP Facility that first commenced Operation on or after January 1, 2008 but before the Effective Date.

"Expected Term Year Energy Production" means the Metered Energy quantity expected to be produced by the Generating Facility during each Term Year, as set forth in Section 1.02(d).

"Federal Funds Effective Rate" means the rate for that day opposite the caption "Federal Funds (effective)" as set forth in the weekly statistical release as H.15(519), or any successor publication, published by the Board of Governors of the Federal Reserve System.

"FERC" means the Federal Energy Regulatory Commission, or any successor entity.

"Financial Incentives" means any and all financial incentives, benefits or credits associated with the Generating Facility, or the ownership or Operation thereof, or the electrical or thermal output of the Generating Facility, including any production or investment tax credits, real or personal property tax credits or sales or use tax credits, but not including any Green Attributes, Capacity Attributes or Resource Adequacy Benefits.

"Firm Operation Date" means the date that is six months after the Term Start Date.

"Force Majeure" means any event or circumstance to the extent beyond the control of, and not the result of the negligence of, or caused by, the Party seeking to have its performance obligation excused thereby, which by the exercise of due diligence such Party could not reasonably have been expected to avoid and which by exercise of due diligence it has been unable to overcome. Force Majeure does not include:

(a) A failure of performance of any other Person, including any Person providing electric transmission service or fuel transportation to the Generating Facility, except to the extent that such failure was caused by an event that would otherwise qualify as a Force Majeure event;

(b) Failure to timely apply for or obtain Permits or other credits required to Operate the Generating Facility;

(c) Breakage or malfunction of equipment (except to the extent that such failure was caused by an event that would otherwise qualify as a Force Majeure); or

(d) A lack of fuel of an inherently intermittent nature such as wind, water, solar radiation or waste gas or waste derived fuel.

"Forced Outage" has the meaning set forth in the CAISO Tariff.

"Forecast" means the hourly forecast of (a) the total electric energy production of the Generating Facility (in MWh) when the Generating Facility is not PIRP-eligible net of the Site Host Load and Station Use, or (b) the available total generation capacity of the Generating Facility (in MW) when the Generating Facility is PIRP-eligible net of the Site Host Load and Station Use.

"Forward Settlement Amount" means the Non-Defaulting Party's Costs and Losses on the one hand, netted against its Gains, on the other. If the Non-Defaulting Party's Gains exceed its Costs and Losses, then the Forward Settlement Amount shall be zero dollars. If the Non-Defaulting Party's Costs and Losses exceed its Gains, then the Forward Settlement Amount shall be an amount owing to the Defaulting Party. The Forward Settlement Amount does not include consequential, incidental, punitive, exemplary or indirect or business interruption damages.

"Free Allowance" means any GHG Emissions Allowance freely allocated to Seller or the Generating Facility by CARB or an authorized Governmental Authority (or any entity authorized by such Governmental Authority).

"GAAP" means generally accepted accounting principles for financial reporting in the United States, consistently applied.

"Gains" means, with respect to any Party, an amount equal to the present value of the economic benefit to it, if any (exclusive of Costs), as of the Early Termination Date resulting from the termination of this Agreement, expressed in dollars and determined in a commercially reasonable manner.

"Generating Facility" means the Generating Unit(s) comprising Seller's power plant, as more particularly described in Section 1.02 and Exhibit B, including all other materials, equipment, systems, structures, features and improvements necessary to produce electric energy and thermal energy, excluding the Site, land rights and interests in land.

"Generating Unit" means one or more generating equipment combinations typically consisting of prime mover(s), electric generator(s), electric transformer(s), steam generator(s) and air emission control devices.

"Generation Operations Center" means the location of Buyer's real-time operations personnel.

"Generator Operator" means the Person that Operates the Generating Facility and performs the functions of supplying energy and interconnected operations services within the meaning of the NERC Registration Criteria.

"Generator Operator Obligations" means the obligations of a Generator Operator as set forth in all applicable NERC Reliability Standards.

"Generator Owner" means the Person that owns the Generating Facility and has registered with the NERC as the Person responsible for complying with all NERC Reliability Standards applicable to the owner of the Generating Facility.

"Generator Owner Obligations" means the obligations of a Generator Owner as set forth in all applicable NERC Reliability Standards.

"GHG" is an abbreviation for "greenhouse gas", which means emissions released into the atmosphere of carbon dioxide (CO2), nitrous oxide (N2O) and methane (CH4), which are produced as the result of combustion or transport of fossil fuels. Other greenhouse gases may include hydrofluorocarbons (HFCs), perfluorocarbons (PFCs) and sulfur hexafluoride (SF6), which are generated in a variety of industrial processes. Greenhouse gases may be defined or expressed in terms of a metric ton of CO2-equivalent, in order to allow comparison between the different effects of gases on the environment; provided, however, that the definition of the term "Greenhouse Gas", as set forth in the immediately preceding sentence, shall be deemed revised to include any update or other change to such term by the CARB or any other Governmental Authority.

"GHG Emissions Allowance" means a limited tradable authorization (whether in the form of a credit, allowance, or other similar right), allocated to, issued to or purchased by, Seller, the Site Host or an Affiliate of Seller, which respect to the Generating Facility, to emit one metric ton of GHG, in accordance with a cap-and-trade program in California for the regulation of GHG, as established by CARB (or by a different Governmental Authority pursuant to federal or state legislation), and as applied to the GHG emitted by the Generating Facility.

"GHG Emissions Cap" means the product of 1) the rate for tonnes of CO2 per MMBtu of natural gas, 0.0531 tonnes/mmbtu, times 2) the Average Higher Heating Value MPR Heat Rate in MMbtu/MWh.

"GHG EPS" means the Greenhouse Gas Emissions Performance Standard set forth in CPUC D.07-01-039 and in subsequent CPUC rulings implementing D.07-01-039, as well as revisions to these standards set forth in any subsequent CPUC-established precondition to the execution of this Agreement.

"Governmental Authority" means (a) any federal, state, local, municipal or other government, (b) any governmental, regulatory or administrative agency, commission, or other authority lawfully exercising or entitled to exercise any administrative, executive, judicial, legislative, police, regulatory or taxing authority or power, or (c) any court or governmental tribunal.

"Governmental Charges" has the meaning as set forth in Section 8.02.

"Green Attributes" means any and all credits, benefits, emissions reductions, offsets, and allowances, howsoever entitled, attributable to the generation from the Project, and its avoided emission of pollutants. Green Attributes include but are not limited to Renewable Energy Credits, as well as:

(1) Any avoided emission of pollutants to the air, soil or water such as sulfur oxides (SO_x), nitrogen oxides (NO_x), carbon monoxide (CO) and other pollutants;

(2) Any avoided emissions of carbon dioxide (CO_2), methane (CH_4), nitrous oxide, hydrofluorocarbons, perfluorocarbons, sulfur hexafluoride and other greenhouse gases (GHGs) that have been determined by the United Nations Intergovernmental Panel on Climate Change, or otherwise by law, to contribute to the actual or potential threat of altering the Earth's climate by trapping heat in the atmosphere;

(3) The reporting rights to these avoided emissions, such as Green Tag Reporting Rights.

Green Tag Reporting Rights are the right of a Green Tag Purchaser to report the ownership of accumulated Green Tags in compliance with federal or state law, if applicable, and to a federal or state agency or any other party at the Green Tag Purchaser's discretion, and include without limitation those Green Tag Reporting Rights accruing under Section 1605(b) of The Energy Policy Act of 1992 and any present or future federal, state, or local law, regulation or bill, and international or foreign emissions trading program. Green Tags are accumulated on a MWh basis and one Green Tag represents the Green Attributes associated with one (1) MWh of energy.

Green Attributes do not include:

(i) Any energy, capacity, reliability or other power attributes from the Project,

(ii) Production tax credits associated with the construction or operation of the Project and other financial incentives in the form of credits, reductions, or allowances associated with the Project that are applicable to a state or federal income taxation obligation,

(iii) Fuel-related subsidies or "tipping fees" that may be paid to Seller to accept certain fuels, or local subsidies received by the generator for the destruction of particular preexisting pollutants or the promotion of local environmental benefits, or

(iv) Emission reduction credits encumbered or used by the Project for compliance with local, state, or federal operating and/or air quality permits.

If the Project is a biomass or biogas facility and Seller receives any tradable Green Attributes based on the greenhouse gas reduction benefits or other emission offsets attributed to its fuel usage, it shall provide Buyer with sufficient Green Attributes to

ensure that there are zero net emissions associated with the production of electricity from the Project.

"Guarantor" means that certain guarantor of Seller set forth in Section 1.06(d).

"Guaranty Agreement" means a guaranty agreement substantially in the form of Exhibit K.

"High-Value Area" has the meaning set forth in Section 6 of Exhibit C.

"Host Site" means the site at which the Site Host Load is consumed, including real property, facilities and equipment owned or operated by the Site Host or its Affiliates located at such site.

"Hour-Ahead Scheduling Deadline" means 30 minutes before the deadline established by the CAISO for the submission of schedules for the applicable hour.

"Incipient Event of Default" has the meaning set forth in Section 9.05(a).

"Interconnection Point" has the meaning set forth in Section 1.03.

"Interconnection Study" means a study or studies prepared by or on behalf of the Transmission Provider or the CAISO to evaluate the impact of the interconnection of the Generating Facility to the Transmission Provider's electric system or the applicable Control Area operator's electric grid.

"Interest Rate" means an annual rate equal to the rate published in The Wall Street Journal as the "Prime Rate" (or, if more than one rate is published, the arithmetic mean of such rates) as of the date payment is due plus two percentage points; *provided*, *however*, that in no event shall the Interest Rate exceed the maximum interest rate permitted by Applicable Laws.

"JAMS" means the Judicial Arbitration and Mediation Services, Inc. or any successor entity.

"kW" means a kilowatt (1,000 watts) of electric capacity or power output.

"kWh" means a kilowatt-hour (1,000 watt-hours) of electric energy.

"Lease" means one or more agreements whereby Seller leases the Site(s) described in Section 1.02 and Exhibit B from a third party, the term of which lease begins on or before the Term Start Date and extends at least through the Term End Date.

"Lender" means any third-party institution or entity or successor in interest or assignee that either (i) purchases the Generating Facility and then leases it to Seller under a Sale-Leaseback Transaction, or (ii) provides development, bridge, construction, or permanent debt or tax equity financing or refinancing (including an Equity Investment) for the Generating Facility to Seller or credit support in connection with this Agreement.

"Letter of Credit" means an irrevocable, nontransferable standby letter of credit provided by Seller and issued by a U.S. commercial bank or a U.S. branch of a foreign bank with such bank

having a Credit Rating of at least "A-" from S&P and "A3" from Moody's, substantially in the form of Exhibit L. All costs to establish and maintain the Letter of Credit shall be borne by Seller.

"Letter of Credit Default" means with respect to a Letter of Credit, the occurrence of any of the following events:

(a) The issuer of such Letter of Credit fails to maintain a Credit Rating of at least "A-" by S&P and "A3" by Moody's;

(b) The issuer of the Letter of Credit fails to comply with or perform its obligations under such Letter of Credit;

(c) The issuer of such Letter of Credit disaffirms, disclaims, repudiates or rejects, in whole or in part, or challenges the validity of, such Letter of Credit;

(d) Such Letter of Credit fails or ceases to be in full force and effect at any time;

(e) Seller fails to provide an extended or replacement Letter of Credit within 20 Business Days before such Letter of Credit expires or terminates; or

(f) The issuer of such Letter of Credit becomes Bankrupt;

provided, *however*, that no Letter of Credit Default shall occur or be continuing in any event with respect to a Letter of Credit after the time such Letter of Credit is required to be canceled or returned to a Party in accordance with the terms of this Agreement.

"Location Bonus" is described in Section 6 of Exhibit C.

"Losses" means, with respect to any Party, an amount equal to the present value of the economic loss to it if any (exclusive of Costs), as of the Early Termination Date, resulting from the termination of this Agreement, expressed in dollars and determined in a commercially reasonable manner.

"Market Price" means the real-time price for Uninstructed Imbalance Energy (as defined in the CAISO Tariff) or any successor price for short-term imbalance energy, as such price or successor price is defined in the CAISO Tariff, that would apply to the Generating Facility, which values are, as of the Effective Date, posted by the CAISO on its website. The values used in this Agreement will be those appearing on the CAISO website on the third Business Day of the calendar month following the month for which such prices are being applied.

"Mediator" has the meaning set forth in Section 10.02.

"Metered Energy" means the total electric energy, expressed in kWh, measured by any or all of the CAISO-Approved Meters (after adjusting for any compensation factors introduced by the CAISO into the CAISO-Approved Meter) or Check Meters, as applicable, at the Generating Facility for the specified Metering Interval.

"Metering Interval" means the smallest measurement time period over which data are recorded by the CAISO-Approved Meters or Check Meters.

"Milestone Schedule" means Seller's milestone schedule, the form of which is attached to this Agreement as Exhibit M.

"Monthly Contract Payment" has the meaning set forth in Section 4.01.

"Monthly Scheduling Fee" is described in Section 4(b) of Exhibit E.

"Moody's" means Moody's Investor Services, Inc.

"MW" means a megawatt (1,000,000 watts) of electric capacity or power output.

"MWh" means a megawatt-hour (1,000,000 watt-hours) of electric energy or power output.

"NERC" means the North American Electric Reliability Corporation, or any successor entity.

"NERC Registration Criteria" means the most recent NERC Statement of Compliance Registry Criteria, which is available on NERC's website.

"NERC Reliability Standards" means those reliability standards applicable to the Generating Facility, or to the Generator Owner or the Generator Operator with respect to the Generating Facility, that are adopted by the NERC and approved by the applicable regulatory authorities, which are available on NERC's website.

"NERC Standards Non-Compliance Penalties" means any and all monetary fines, penalties, damages, interest or assessments by the NERC, the CAISO, the WECC, a Governmental Authority or any Person acting at the direction of a Governmental Authority arising from or relating to a failure to perform the obligations of Generator Operator or Generator Owner as set forth in the NERC Reliability Standards.

"New Eligible CHP Facility" means an Eligible CHP Facility that commences Operation after the Effective Date.

"Non-Availability Charges" has the meaning set forth in the CAISO Tariff.

"Non-Defaulting Party" has the meaning set forth in Section 6.02.

"Notice" means notices, requests, statements or payments provided in accordance with Section 9.07 and Exhibit J.

"Operate" means to provide (or the provision of) all the operation, engineering, purchasing, repair, supervision, training, inspection, testing, protection, use management, improvement, replacement, refurbishment, retirement, and maintenance activities associated with operating the Generating Facility in order to produce the Power Product in accordance with Prudent Electrical Practices.

"Outage" has the meaning set forth in the CAISO Tariff.

"Outage Schedule" has the meaning set forth in Section 2(a) of Exhibit N.

"Outage Schedule Submittal Requirements" describes the obligations of Seller to submit maintenance and planned outage schedules (as defined in the CAISO Tariff under WECC rules) to Buyer 24 months in advance, as set forth in Exhibit N.

"Parallel Operation" means the Generating Facility's electrical apparatus is connected to the Transmission Provider's system and the circuit breaker at the point of common coupling is closed. The Generating Facility may be producing electric energy or consuming electric energy at such time.

"Party or Parties" has the meaning set forth in the Preamble.

"Peak Months" means June, July, August and September.

"Performance Assurance" means collateral (in the amount of the Performance Assurance Amount) for Seller's performance under this Agreement in the form of cash, Letter(s) of Credit, or other security acceptable to Buyer.

"Performance Assurance Amount" has the meaning set forth in Section 1.06(b).

"Permits" means all applications, approvals, authorizations, consents, filings, licenses, orders, permits or similar requirements imposed by any Governmental Authority, or the CAISO, in order to develop, construct, Operate, maintain, improve, refurbish or retire the Generating Facility or to Forecast or deliver the electric energy produced by the Generating Facility to Buyer.

"Person or Persons" means an individual, partnership, corporation, business trust, limited liability company, limited liability partnership, joint stock company, trust, unincorporated association, joint venture or other entity or a Governmental Authority.

"PIRP" (i.e., Participating Intermittent Resource Program) means the CAISO's intermittent resource program initially established pursuant to Amendment No. 42 of the CAISO Tariff in Docket No. ER02-922-000, or any successor program that Buyer determines accomplishes a similar purpose.

"Planned Outage" means a disconnection, separation or reduction in the capacity of the Generating Facility which is not the result of a Forced Outage.

"PNode" has the meaning set forth in the CAISO Tariff.

"Power Product" means (a) the As-Available Contract Capacity and (b) all electric energy produced by the Generating Facility, net of all Station Use and any and all of the Site Host Load.

"Power Rating" means the electrical power output value indicated on the generating equipment nameplate.

"Primary Fuel" means the fuel or combination of fuels that are provided for in the Permits applicable to the Generating Facility.

"Product" means the Power Product and the Related Products.

"Project" means the Generating Facility.

"Prudent Electrical Practices" means those practices, methods and acts that would be implemented and followed by prudent operators of electric generating facilities in the Western United States, similar to the Generating Facility, during the relevant time period, which practices, methods and acts, in the exercise of prudent and responsible professional judgment in the light of the facts known at the time a decision was made, could reasonably have been expected to accomplish the desired result consistent with good business practices, reliability and safety.

Prudent Electrical Practices includes, at a minimum, those professionally responsible practices, methods and acts described in the preceding sentence that comply with the manufacturer's warranties, restrictions in this Agreement, and the requirement of Governmental Authorities, WECC standards, the CAISO and Applicable Laws. Prudent Electrical Practices shall include taking reasonable steps to ensure that:

(a) Equipment, materials, resources and supplies, including spare parts inventories, are available to meet the Generating Facility's needs;

(b) Sufficient operating personnel are available at all times and are adequately experienced, trained and licensed as necessary to Operate the Generating Facility properly and efficiently, and are capable of responding to reasonably foreseeable emergency conditions at the Generating Facility and Emergencies whether caused by events on or off the Site;

(c) Preventative, routine, and non-routine maintenance and repairs are performed on a basis that ensures reliable, long term and safe operation of the Generating Facility, and are performed by knowledgeable, trained and experienced personnel utilizing proper equipment and tools;

(d) Appropriate monitoring and testing are performed to ensure equipment is functioning as designed;

(e) Equipment is not operated in a reckless manner, in violation of manufacturer's guidelines or in a manner unsafe to workers, the general public or the Transmission Provider's electric system, or contrary to environmental laws, permits or regulations or without regard to defined limitations, such as flood conditions, safety inspection requirements, operating voltage, current, volt ampere reactive (VAR) loading, frequency, rotational speed, polarity, synchronization, and control system limits; and

(f) Equipment and components designed and manufactured to meet or exceed the standard of durability that is generally used for electric energy generation operations

in the Western United States and will function properly over the full range of ambient temperature and weather conditions reasonably expected to occur at the Site and under both normal and emergency conditions.

"PPT" means Prevailing Pacific Time, which is the Pacific Daylight time when California observes Daylight Savings Time and Pacific Standard Time otherwise.

"QF 20MW Settlement Contract" means the Power Purchase and Sale Agreement commonly described as the "Standard Contract for Qualifying Facilities with a Power Rating that is Less than or Equal to 20MW" a link to which such contract is listed in Appendix A to CPUC Decision 10-12-035 as Attachment A, Exhibit 6, as such contract may be amended from time to time.

"QF Settlement Contract Payment Period" means the entire time that the Monthly Contract Payment, inclusive of the first and last days of such period, is determined in accordance with the Applicable QF 20MW Settlement Contract Payment Provisions pursuant to Sections 1.05 and 4.01.

"Real-Time Forced Outage" means a Forced Outage which occurs only after 5:00 p.m. PPT on the day before the Trading Day.

"Related Products" means (i) with respect to Resource Adequacy Benefits that portion of the Resource Adequacy Benefits that are in excess of those Resource Adequacy Benefits used by Seller or by a Site Host, both in connection with the Host Site, to meet a known and established, at the point in time when the Resource Adequacy Benefits are to be used, resource adequacy obligation under any Resource Adequacy Ruling, and (ii) any Green Attributes, Capacity Attributes and all other attributes associated with the electric energy or capacity of the Generating Facility (but not including any Financial Incentives) that are in excess of those Green Attributes, Capacity Attributes or other attributes used, or retained for future use, by Seller or a Site Host, both in connection with the Host Site, to meet a known and established, at the point in time when the relevant attribute(s) are to be used or retained, obligation under Applicable Law.

"Renewable Energy Credit" has the meaning set forth in Public Utilities Code Section 399.12(g), as may be amended from time to time or as further defined or supplemented by Applicable Law.

"Resource Adequacy Benefits" means the rights and privileges attached to the Generating Facility that satisfy any Person's resource adequacy obligations, as those obligations are set forth in any Resource Adequacy Rulings and shall include any local, zonal or otherwise locational attributes associated with the Generating Facility.

"Resource Adequacy Resource" has the meaning set forth in the CAISO Tariff.

"Resource Adequacy Rulings" means CPUC Decisions 04-01-050, 04-10-035, 05-10-042, 06-06-024, 06-07-031 and any subsequent CPUC ruling or decision, or any other resource adequacy laws, rules or regulations enacted, adopted or promulgated by any applicable Governmental Authority, as such CPUC decisions, rulings, laws, rules or regulations may be amended or modified from time to time during the Term.

"Responsible Officer" means the chief financial officer, treasurer or any assistant treasurer of a Party or its Guarantor or any employee of a Party or its Guarantor designated by any of the foregoing officers.

"S&P" means the Standard & Poor's Rating Group.

"Sale-Leaseback Transaction" means a transaction in which Seller (i) sells the Generating Facility to a Lender providing tax equity financing to Seller and then (ii) leases the Generating Facility back from the Lender under an agreement authorizing Seller to act on behalf of the Lender in all matters relating to the control and Operation of the Site and the Generating Facility for the Term, subject to Lender's right to terminate the lease in the event of a default by Seller as set forth in the agreement between Seller and Lender.

"Schedule" means the action of the Scheduling Coordinator, or its designated representatives, of notifying, requesting, and confirming to the CAISO, the CAISO-Approved Quantity of electric energy.

"Scheduling Coordinator" means the Buyer, as certified by the CAISO for the purposes of undertaking the functions specified in Exhibit E.

"Scheduling Fee" means the Monthly Scheduling Fee and the SC Set-Up Fee.

"SC Set-Up Fee" is described in Section 4(a) of Exhibit E.

"SC Replacement Date" has the meaning set forth in Section 7 of Exhibit E.

"SEC" means the United States Securities and Exchange Commission, or any successor entity.

"Security Interest" has the meaning set forth in Section 3 of Exhibit D.

"Seller" has the meaning set forth in the Preamble.

"Seller's Day-Ahead Forecast" means the most recently update Forecast submitted by 5:00 p.m. PPT on the day before the Trading Day.

"Seller's Energy Forecast" means Seller's most recently updated Forecast submitted in accordance with Exhibit G.

"Seller's Final Energy Forecast" means Seller's Energy Forecast as may be updated for Forced Outages that occur after the Hour Ahead Scheduling Deadline, but not for Ambient Conditions.

"Settlement Interval" has meaning set forth in the CAISO Tariff.

"Simple Interest Payment" means a dollar amount calculated by multiplying the:

(a) Dollar amount on which the Simple Interest Payment is based; by

(b) Federal Funds Effective Rate or Interest Rate as applicable; by

(c) The result of dividing the number of days in the calculation period by 360.

"Site" means the real property on which the Generating Facility is located, as further described in Section 1.02(b) and Exhibit B.

"Site Control" means that Seller (a) owns the Site, (b) is the lessee of the Site under a Lease, (c) is the holder of a right-of-way grant or similar instrument with respect to the Site, or (d) is managing partner or other Person authorized to act in all matters relating to the control and Operation of the Site and Generating Facility.

"Site Host" means the Person or Persons purchasing or otherwise using the Site Host Load or thermal energy output from the Generating Facility.

"Site Host Load" means the electric energy and capacity produced by or associated with the Generating Facility that serves electrical loads (that are not Station Use) of Seller or one or more third parties conducted pursuant to California Public Utilities Code Section 218(b).

"SLIC" means Scheduling and Logging system for the CAISO.

"Station Use" means electric energy produced by the Generating Facility that is:

(a) Used within the Generating Facility to power the lights, motors, control systems and other electrical loads that are necessary for operation; and

(b) Consumed as losses within the low voltage, electrical distribution system of the Generating Facility including:

i. The Generating Facility's, or, if applicable, each Generating Unit's 16 kV electric voltage step-up transformer; and

ii. The portion of the electric bus work that:

1. Connects the high voltage side of the Generating Facility's, or, if applicable, each Generating Unit's electric voltage step-up transformer to the Estero Substation; and

2. Is located on the Generating Facility side of the measurement points for the CAISO-Approved Meters.

"Telemetry System" means a system of electronic components that interconnects the CAISO and the Generating Facility in accordance with the CAISO's applicable requirements as set forth in Section 3.10.

"Term" has the meaning set forth in Section 1.01.

"Term End Date" has the meaning set forth in Section 1.01.

"Termination Payment" has the meaning set forth in Section 6.03.

"Term Start Date" has the meaning set forth in Section 1.01.

"Term Year" means a 12-month period beginning on the first day of the Term and each successive 12-month period thereafter.

"TOD Period" means the time of delivery period used to calculate the Monthly Contract Payment set forth in Exhibit C.

"Trading Day" means the day in which Day-Ahead trading occurs in accordance with the WECC Preschedule Calendar (as found on the WECC's website).

"Transmission Provider" means any Person responsible for the interconnection of the Generating Facility with the interconnecting utility's electrical system or the CAISO-Controlled Grid or transmitting the Metered Energy on behalf of Buyer from the Delivery Point to the CAISO-Controlled Grid.

"Uninstructed Deviation GMC Rate" means the administrative grid management charge applied by the CAISO to Uninstructed Deviations (as defined in the CAISO Tariff) using the absolute value for the Uninstructed Deviations by Settlement Interval.

"Uninstructed Deviation Penalty" means the penalty set forth in the CAISO Tariff.

"WDAT" means Buyer's Wholesale Distribution Access Tariff.

"Web Client" has the meaning set forth in Section 2(a) of Exhibit N.

"WECC" means the Western Electricity Coordinating Council, the regional reliability council for the western United States, northwestern Mexico, and southwestern Canada, or any successor entity.

**** End of Exhibit A ****

EXHIBIT B

Generating Facility and Site Description

1. Generating Facility Description.

This facility is designed to utilize three GE-Jenbacher natural gas engine driven generators to produce electricity and use the waste heat from the water used to cool the engines to heat the green-houses as well as directing the exhaust with its CO2 into the green-houses for the plants to ingest. It is intended to operate these units 12 hour/day 365 day/year. By utilizing these units it eliminates the requirement to buy natural gas for the heating. It also eliminates the need to purchase CO2 for plant ingestation and it produces electricity which will be sold. Please see exhibit B-1 for a description of electric metering and control systems.

The "Generating Facility" will only consist of three units, with serial numbers 1032801, 1032802 and 1032824, which will operate during the Term. The units will utilize a gearbox to step up the frequency from 50 hertz to 60 hertz.

Attached hereto as Exhibit B-1 is (1) a one-line diagram, (2) a useful thermal diagram of the generator and (3) an image of the generator nameplates.

2. Site Description.

Attached hereto as Exhibit B-2 is (1) a legal description of the Site and (2) a site plan drawing.

**** End of Exhibit B ****

EXHIBIT B-1
Generating Facility Description

1. Single-line Diagram

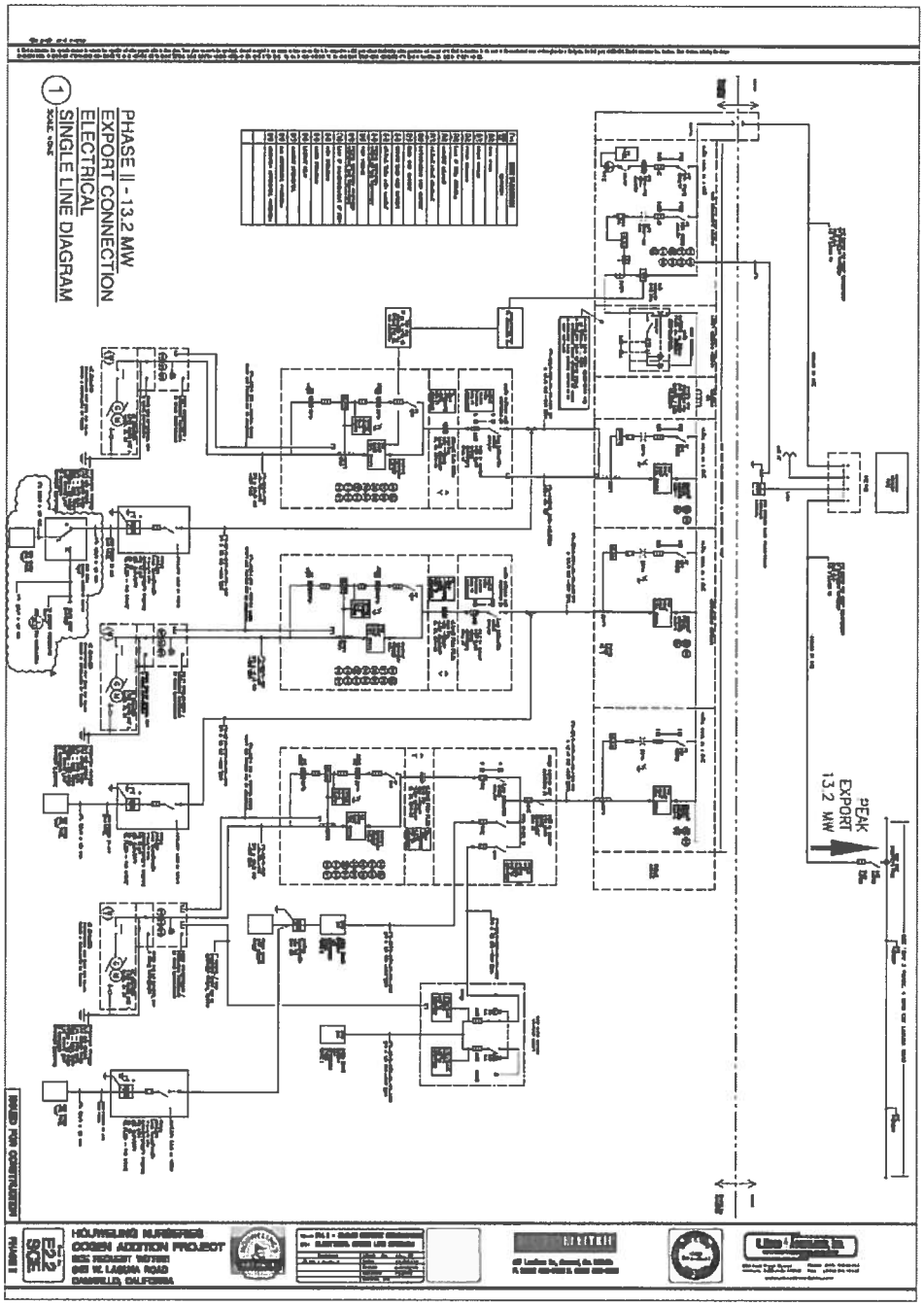

2. Useful Thermal Diagram of Generator

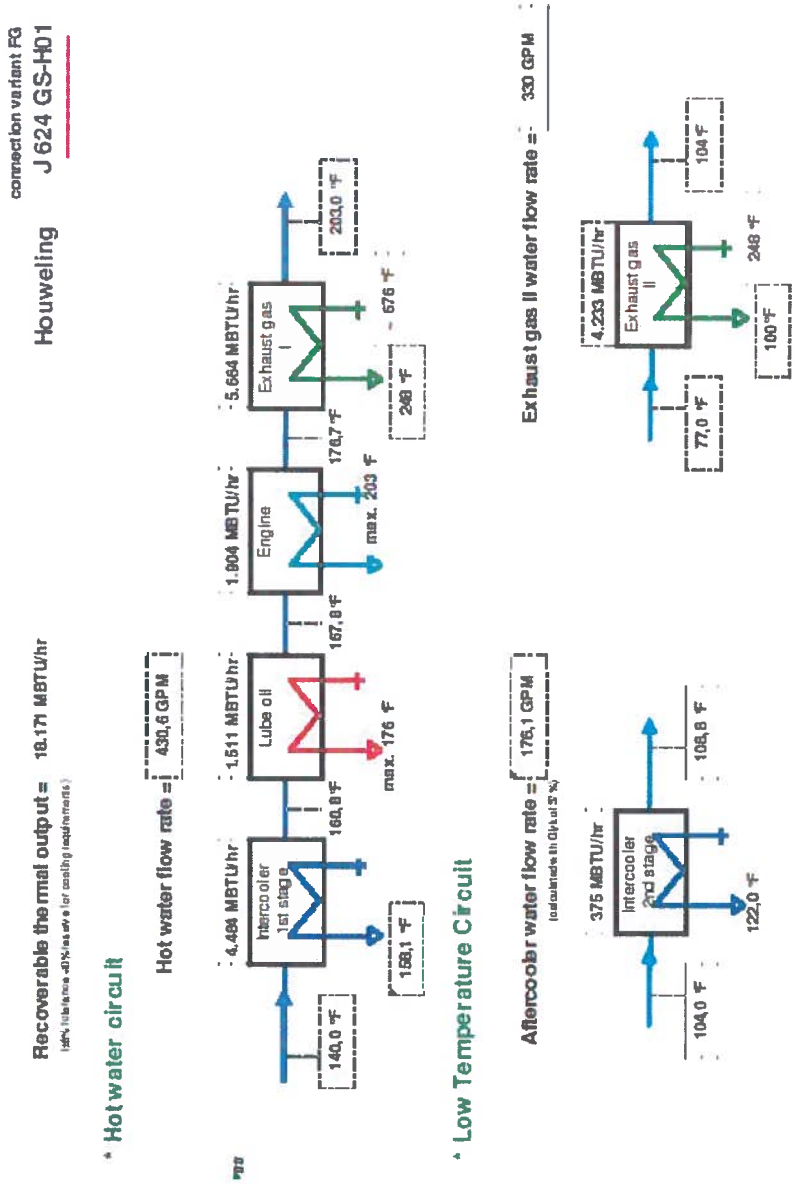

3. Generator Nameplate.

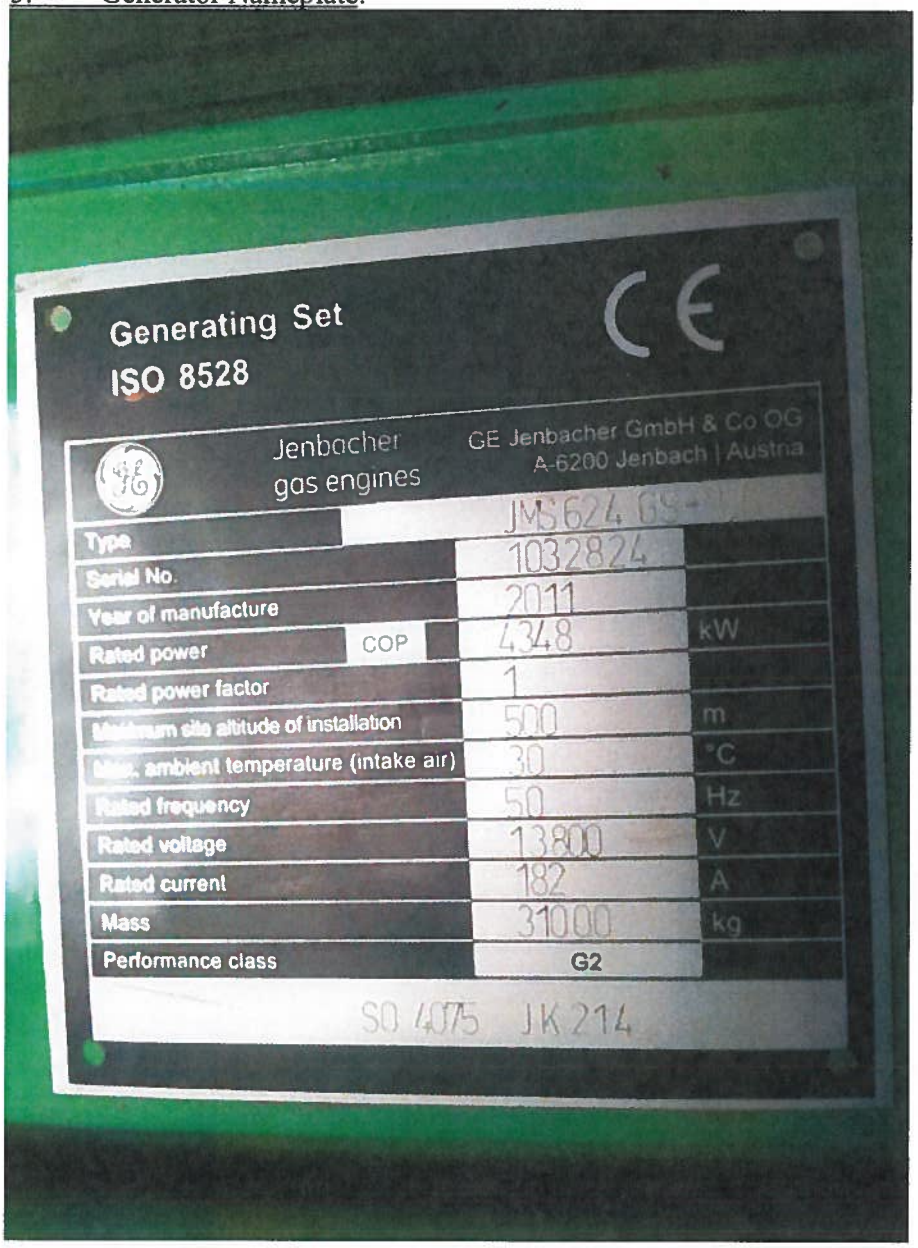

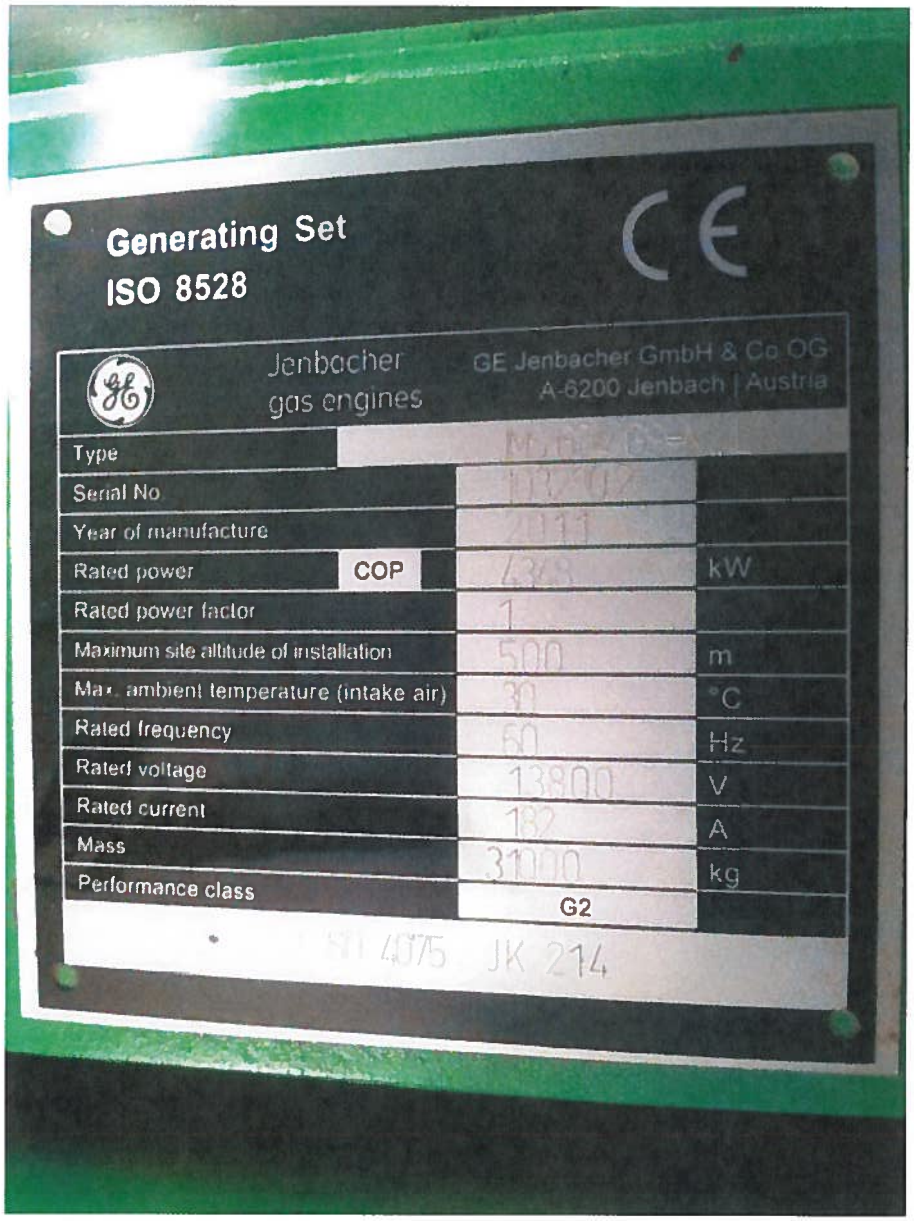
Generating Set
ISO 8528
CE
Jenbacher
gas engines
GE Jenbacher GmbH & Co OG
A-6200 Jenbach | Austria
Type
Serial No
Year of manufacture
Rated power
COP
kW
Rated power factor
1
Maximum site altitude of installation
500
m
Max. ambient temperature (intake air)
°C
Rated frequency
Hz
Rated voltage
V
Rated current
A
Mass
kg
Performance class
G2
JK 214

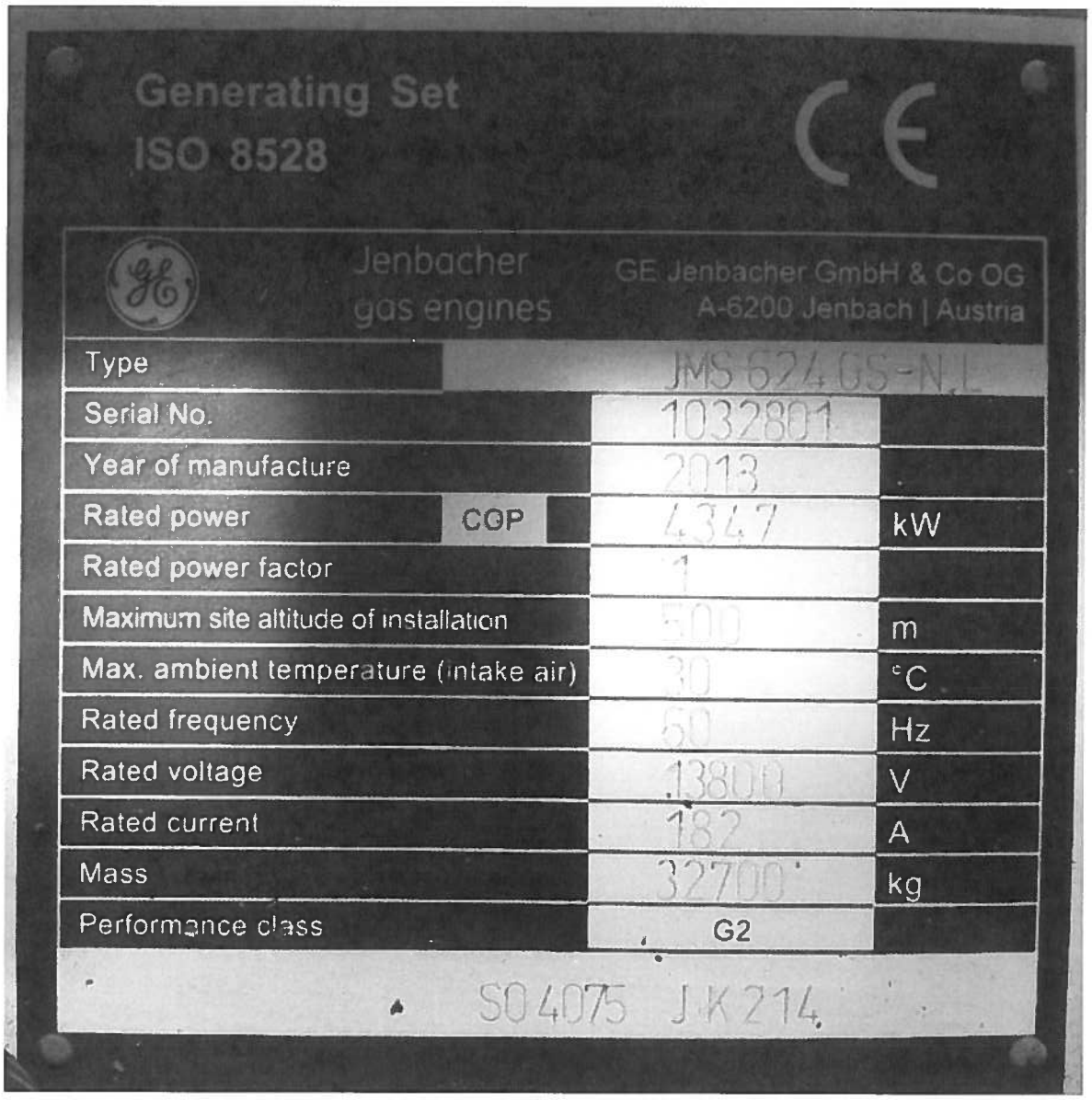

Generating Set
ISO 8528

Jenbacher
gas engines

GE Jenbacher GmbH & Co OG
A-6200 Jenbach | Austria

Type		JMS 624 GS-N.L	
Serial No.		1032801	
Year of manufacture		2013	
Rated power	COP	4347	kW
Rated power factor		1	
Maximum site altitude of installation		500	m
Max. ambient temperature (intake air)		30	°C
Rated frequency		50	Hz
Rated voltage		13800	V
Rated current		182	A
Mass		32700	kg
Performance class		G2	

S04075 JK214

*** End of Exhibit B-1 ***

EXHIBIT B-2
Site Description

1. Legal Description

RECORDING REQUESTED BY
CHICAGO TITLE COMPANY
AND WHEN RECORDED MAIL TO

HOUWELING NURSERIES, LTD.
237743 48TH AVENUE
LANGLEY, BRITISH COLOMBIA

96-002931

Recorded
Official Records
County of
Ventura
Richard D. Dean
Recorder
8:00am 10-Jan-96

Rec Fee 15.00
A.R. 15.00
CHIC EE

Escrow No. 111295-R - SM
Order No. 111295-R - GB

SPACE ABOVE THIS LINE FOR RECORDER'S USE

GRANT DEED

Assessor's Parcel No: 230-071-13

THE UNDERSIGNED GRANTOR(S) DECLARE(S)
DOCUMENTARY TRANSFER TAX IS $-0- NO CONSIDERATION, EASEMENT ONLY

[X] unincorporated area [ ] City of

[ ] computed on the full value of the interest or property conveyed, or is

[X] computed on the full value less the value of liens or encumbrances remaining at time of sale, and

FOR A VALUABLE CONSIDERATION, receipt of which is hereby acknowledged,
COAST FARMS, INC., A CALIFORNIA CORPORATION

hereby GRANT(S) to
HOUWELING NURSERIES OXNARD, INC., A CALIFORNIA CORPORATION

the following described real property in the County of Ventura, State of California:
SEE LEGAL DESCRIPTION ATTACHED HERETO AND MADE A PART HEREOF.

Dated December 22, 1995

COAST FARMS, INC.,
A CALIFORNIA CORPORATION

BY

BY

STATE OF CALIFORNIA
COUNTY OF VENTURA) SS
On JANUARY 9, 1996 before me,
SHIRLEY M. MARKS
a Notary Public in and for said County and State, personally appeared
DON S. CHIKASAWA AND MARTHA CHIKASAWA

personally known to me (or proved to me on the basis of satisfactory evidence) to be the person(s) whose name(s) is/are subscribed to the within instrument and acknowledged to me that he/she/they executed the same in his/her/their authorized capacity(ies), and that by his/her/their signature(s) on the instrument the person(s), or the entity upon behalf of which the person(s) acted, executed the instrument.

WITNESS my hand and official seal.

Signature of Notary

SHIRLEY M. MARKS
COMM #1068434
Notary Public California
VENTURA COUNTY
My Comm. Exp. Aug 26 1999

FOR NOTARY SEAL OR STAMP

MAIL TAX STATEMENTS TO PARTY SHOWN ON FOLLOWING LINE: IF NO PARTY SO SHOWN, MAIL AS DIRECTED ABOVE

Name | Street Address | City, State & Zip

EXHIBIT "A"

A non-exclusive easement fo[illegible] rrigation water pipeline for use, [illegible]r, or replacement of the existing water line over the Northerly 25 feet of the following described property:

Parcel 1:

The Northerly 1489.29 feet of the Westerly 1169.95 feet of Parcel B, Subdivision 60 of the Rancho El Rio le Santa Clara O' La Colonia, in the County of Ventura, State of California, according to the map recorded in Book 3, Page 12 of Maps, in the office of the County Recorder of said County.

EXCEPT the Easterly 16.4459 acres thereof.

ALSO EXCEPT any portion lying within Parcel 6 herein.

Parcel 2:

That portion of Parcel B, Subdivision 68 of the Rancho El Rio de Santa Clara o' La Colonia, in the County of Ventura, State of California, according to the map recorded in Book 3, Page 12 of Maps, in the office of the County Recorder of said County, described as follows:

Beginning at the intersection of the Northerly line of said Parcel B with the Westerly line of the Easterly 200 acres of Parcels B and C of said Subdivision 68; thence along said Westerly line,

1st: South 2655.84 feet to the Southerly line of said Parcel B; thence along said Southerly line,

2nd: West 343.21 feet, more or less, to the Southeasterly corner of the South 925 feet of the West 1656 feet of said Parcel B; thence along the East line of said land,

3rd: North 925 feet on the Northeast corner of said land; thence along the North line of said land,

4th: West 480.95 feet more or less, to the intersection with a line parallel with said Westerly line of the Easterly 200 acres, distant Westerly 823.26 feet measured at right angles from said Westerly line of the Easterly 200 acres; thence along said parallel line,

5th: North 1730.84 feet to said Northerly line of Parcel B; thence along said Northerly line,

6th: East 823.26 feet to the point of beginning.

EXCEPT the interest in said land excepted in the deed from American Crystal Sugar Company, a corporation, recorded January 29, 1951 in Book 977, Page 58, Official Records, as follows:

ALSO EXCEPT the interest in said land excepted in the deed from John A. Maring and wife recorded May 31, 1967 in Book 3149, Page 109 of Official Records, as follows:

"Reserving and excepting however unto the grantors, their heirs, successors and assigns, a 1/4th interest in and to all oil, gas and other hydrocarbon substances and all other minerals of every kind and nature lying below a depth of 550 feet below the surface of said land, but without the right of entry on the surface of said land or the subsurface thereof to a depth of 550 feet below the surface."

Parcel 3:

The East 16.4556 acres of the following described property, the West line thereof to be parallel with the East line thereof; that portion of Parcel B.Subdivision 68 of the Rancho El Rio De Santa Clara o' La Colonia, in the County of Ventura, State of California, according to the map recorded in Book 3, Page 12 of Maps, in the office of the County Recorder of said County, described as follows:

Beginning at the intersection of a line parallel with and distant Westerly 823.26 feet measured at right angles from the Westerly line of the Easterly 200 acres of Parcels B and C of said Subdivision 68, with the Northerly line of said Parcel B; thence along said parallel line,

1st: South 1489.20 feet; thence parallel with said Northerly line of Parcel B,

2nd: West 1169.95 feet to the Westerly line of said Parcel B; thence along said Westerly line,

3rd: North 1489.29 feet to the Northwesterly corner of said Parcel B; thence along the Northerly line thereof,

4th: East 1169.95 feet to the point of beginning.

ALSO EXCEPT the interest in said land excepted in the deed from John A. Maring and wife recorded May 31, 1967 in Book 3149, Page 109 of Official Records, as follows:

"Reserving and excepting however unto the grantors, their heirs, successors and assigns, a 1/4th interest in and to all oil, gas and other hydrocarbon substances and all other minerals of every kind and nature lying below a depth of 550 feet below the surface of said land, but without the right of entry on the surface of said land or the subsurface thereof to a depth of 550 feet below the surface."

Parcel 4:

The Westerly 40 acres of the Easterly 200 acres of Parcels B and C of Subdivision 68 of Rancho El Rio de Santa Clara O'La Colonia, according to the map recorded in Book 3, Page 12 of Maps, in the office of the County Recorder of said County.

ALSO EXCEPT the interest in said land excepted in the deed from John A. Maring and wife recorded May 31, 1967 in Book 3149, Page 109 of Official Records, as follows:

"Reserving and excepting however unto the grantors, their heirs, successors and assigns, a 1/4th interest in and to all oil, gas and other hydrocarbon substances and all other minerals of every kind and nature lying below a depth of 550 feet below the surface of said land, but without the right of entry on the surface of said land or the subsurface thereof to a depth of 550 feet below the surface."

Parcel 5:

That portion of Parcel B of Subdivision 68, of the Rancho El Rio de SantaClara O' La Colonia, in the County of Ventura, State of California, as per Map recorded in Book 3, Page 12 of Maps, in the office of the County Recorder of said County, described as follows:

Beginning at a point in the North line of said Parcel B, distant Easterly 334 feet from the East line of Wood Road; thence from said point of beginning,

1st: Easterly 170 feet along the North line of said Parcel B; thence,

2nd: South 185 feet; thence,

3rd: West 170 feet; thence,

4th: North 185 feet to the point of beginning.

ALSO EXCEPT the interest in said land excepted in the deed from John A. Maring and wiferecorded May 31, 1967, in Book 3149 Page 109, as follows:

"Reserving and excepting however unto the grantors, their heirs, successors and assigns, a 1/4th interest in and to all oil, gas and other hydrocarbon substances and all other minerals of every kind and nature lying below a depth of 550 feet below the surface of said land, but without the right of entry on the surface of said land or the subsurface thereof to a depth of 550 feet below the surface."

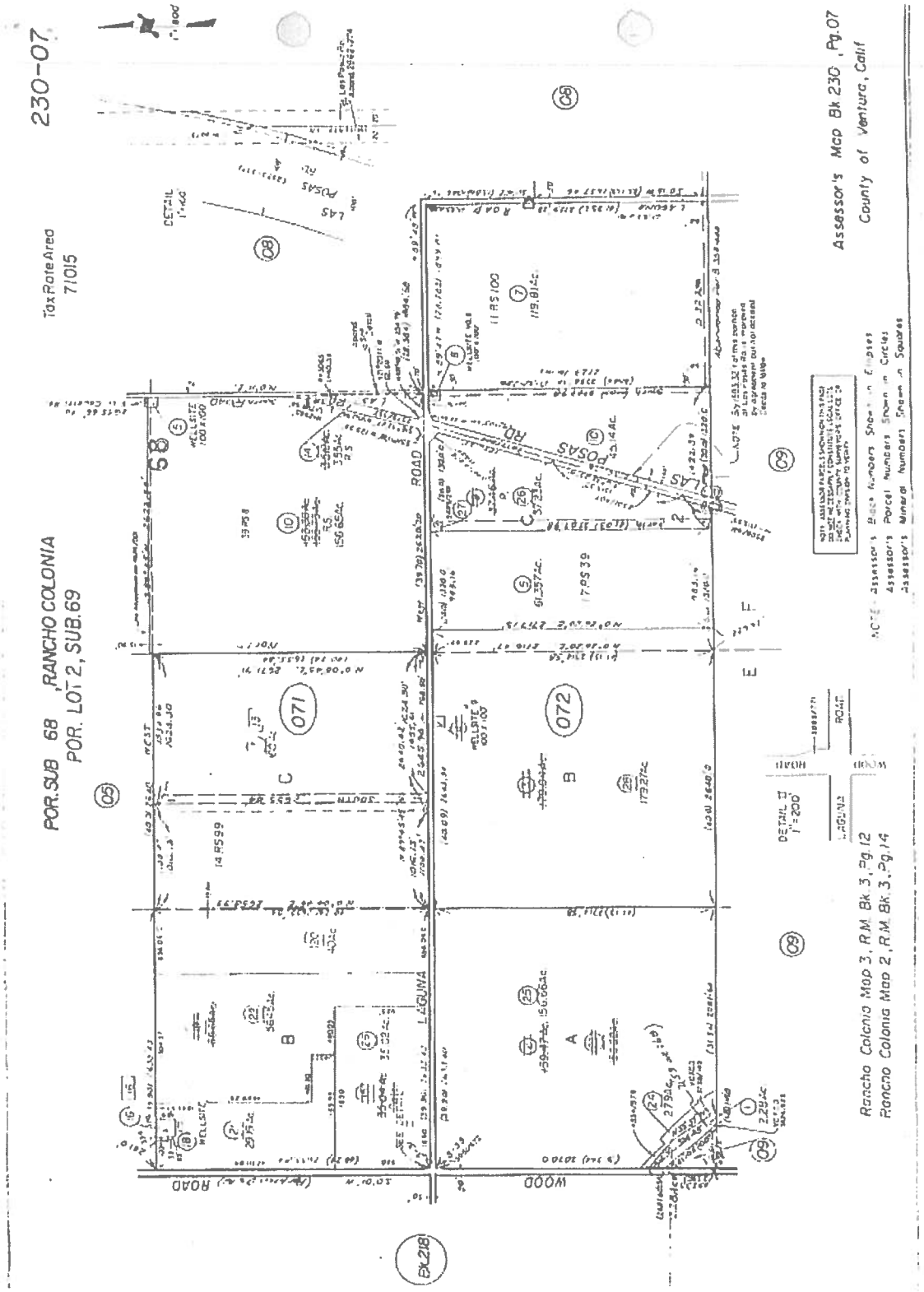
230-07
Tax Rate Area
71015
POR. SUB 68 , RANCHO COLONIA
POR. LOT 2, SUB. 69
Assessor's Map Bk 230 , Pg. 07
County of Ventura, Calif
Rancho Colonia Map 3, R.M. Bk. 3, Pg. 12
Rancho Colonia Map 2, R.M. Bk. 3, Pg. 14
LAGUNA
WOOD
ROAD
POSAS
071
072
BK 218

RECORDING REQUESTED BY
CHICAGO TITLE COMPANY
AND WHEN RECORDED MAIL TO

HOUWELING NURSERIES OXNARD,
INC.
23743 40TH AVENUE
LANGLEY, B.C., CANADA V3A4R1

95-148132

Recorded
Official Records
County of
Ventura
Richard D. Dean
Recorder
8:00am 30-Nov-95

Rec Fee	9.00
DOC	3647.60
SUR	10.00
A.R.	3666.60

CHIC EE 2

Escrow No. 711291-6 - SM
Order No. 711235-8 - GB

SPACE ABOVE THIS LINE FOR RECORDER'S USE

GRANT DEED

Assessor's Parcel No: 230-071-13

THE UNDERSIGNED GRANTOR(S) DECLARE(S)
DOCUMENTARY TRANSFER TAX IS $3,647.60
[X] unincorporated area [ ] City of
[X] computed on the full value of the interest or property conveyed, or is
[ ] computed on the full value less the value of liens or encumbrances remaining at time of sale, and

FOR A VALUABLE CONSIDERATION, receipt of which is hereby acknowledged,
COAST FARMS, INC., A California corporation

hereby GRANT(S) to
HOUWELING NURSERIES OXNARD, INC., A CALIFORNIA CORPORATION

the following described real property in the County of Ventura, State of California:
LEGAL DESCRIPTION ATTACHED HERETO AND MADE A PART HEREOF BY REFERENCE

Dated November 21, 1995

STATE OF CALIFORNIA
COUNTY OF VENTURA } SS.
On NOVEMBER 28, 1995 before me,
SHIRLEY M. MARKS
a Notary Public in and for said County and State, personally appeared
DON S. CHIKASAWA AND MARTHA CHIKASAWA

personally known to me (or proved to me on the basis of satisfactory evidence) to be the person(s) whose name(s) is/are subscribed to the within instrument and acknowledged to me that he/she/they executed the same in his/her/their authorized capacity(ies), and that by his/her/their signature(s) on the instrument the person(s), or the entity upon behalf of which the person(s) acted, executed the instrument.

WITNESS my hand and official seal.

Signature of Notary

COAST FARMS, INC.,
A CALIFORNIA CORPORATION
BY
BY

SHIRLEY M. MARKS
COMM. #1065434
Notary Public California
VENTURA COUNTY
My Comm. Exp. Aug. 26, 1998

FOR NOTARY SEAL OR STAMP

MAIL TAX STATEMENTS TO PARTY SHOWN ON FOLLOWING LINE; IF NO PARTY SO SHOWN, MAIL AS DIRECTED ABOVE

Name Street Address City, State & Zip

EXHIBIT "A"

The East 160 acres of Parcel C, Subdivision 68, of the Rancho El Rio de Santa Clara o' La Colonia, in the County of Ventura, State of California, as per Map recorded in Book 3, Page 12 of Maps, in the office of the County Recorder of said County.

EXCEPT from the East 160 acres, a 1/4th interest in and to all oil, gas and other hydrocarbon substances and all other minerals of every kind and nature lying below a depth of 550 feet below the surface of said land, but without the right of entry on the surface of said land or the subsurface thereof to a depth of 550 feet below the surface, as excepted in deed from John A. Maring, et al., recorded June 16, 1964 as Document No. 40340 in Book 2561, Page 491 of Official Records.

ALSO EXCEPT the interest in a portion said land excepted in the deed from John A. Maring and wife recorded May 31, 1967 in Book 3149, Page 109 of Official Records, as follows:

"Reserving and excepting however unto the grantors, their heirs, successors and assigns, a 1/4th interest in and to all oil, gas and other hydrocarbon substances and all other minerals of every kind and nature lying below a depth of 550 feet below the surface of said land, but without the right of entry on the surface of said land or the subsurface thereof to a depth of 550 feet below the surface."

RESERVING UNTO THE GRANTOR HEREIN, its successors and assigns, any and all oil, gas and other hydrocarbon substances and all other minerals of every kind and nature lying below a depth of 500 feet below the surface of said land, but without the right of entry on the surface of said land or the subsurface thereof to a depth of 500 feet below the surface.

ALSO RESERVING UNTO THE GRANTOR HEREIN, its successors and assigns, the non-exclusive right to use the existing well and irrigation water located at the Northeast corner of APN NO. 130-071-13 until such time as Seller's ownership in Parcel B, Subdivision 68, of the Rancho El Rio de Santa Clara o' La Colonia has been sold, or one year after the recordation of this Grant Deed, whichever occurs first.

2. Site Plan Drawing.

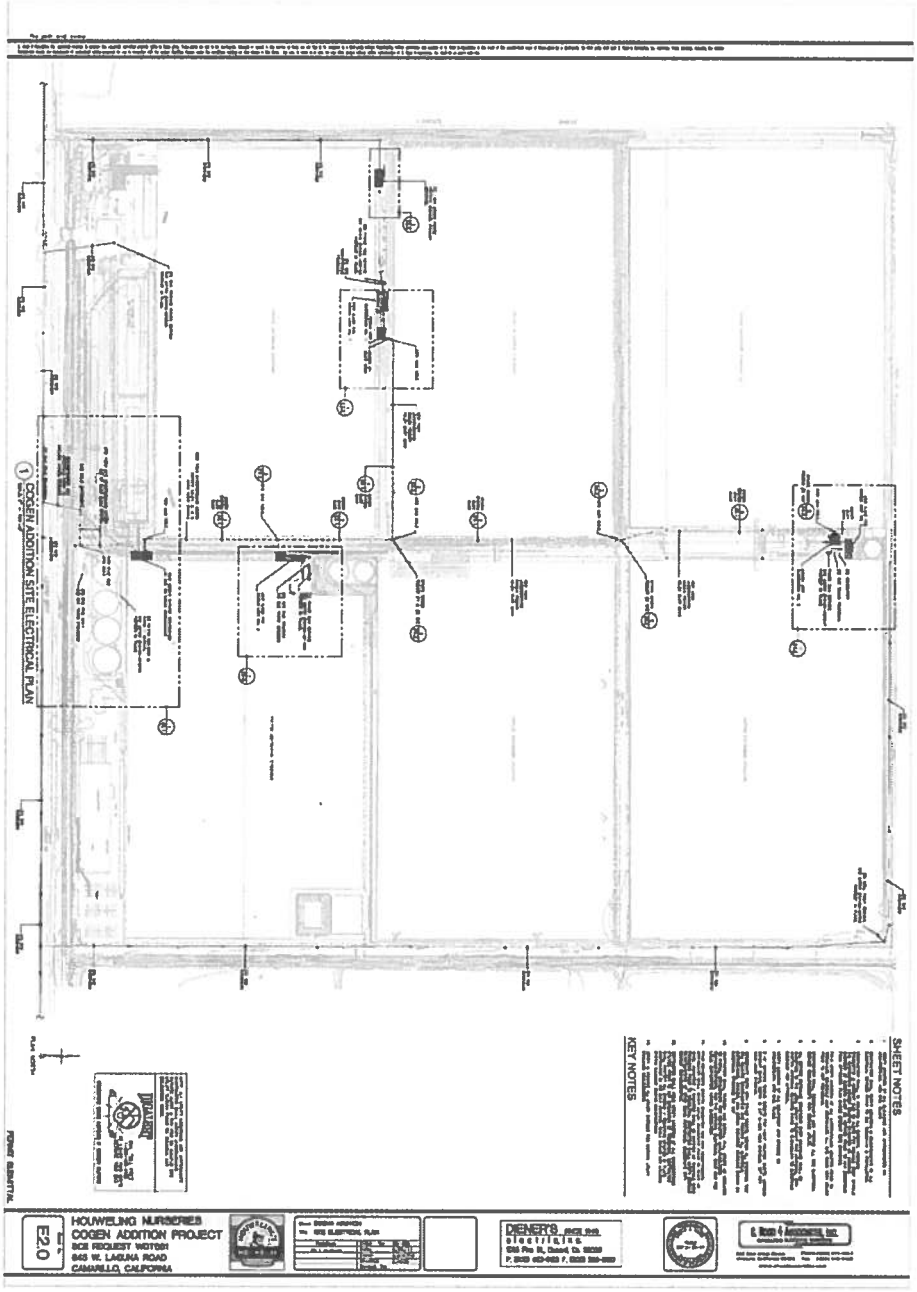

*** End of Exhibit B-2 ***

EXHIBIT C

Monthly Contract Payment Calculation

1. Monthly Contract Payment.

Each Monthly Contract Payment is calculated on a calendar month basis in dollars as follows:

TOD Period payment $_{1st\ TOD\ Period}$ +
TOD Period payment $_{2nd\ TOD\ Period}$ +
TOD Period payment $_{3rd\ TOD\ Period}$ +
Location Bonus

All TOD Period payments shall be calculated as set forth in Section 2 of this Exhibit C.

The "1st TOD Period," "2nd TOD Period," and "3rd TOD Period" subscripts refer to the three TOD Periods that apply for the applicable calculation month, as set forth in Section 5 of this Exhibit C.

The Location Bonus, if applicable, shall be calculated as set forth in Section 6 of this Exhibit C.

2. TOD Period Payment Calculation.

Each monthly TOD Period payment is calculated in dollars as follows:

(Fixed price component + Variable price component) *
metered kWh exported during the TOD Period during the month * (TOD factor)

Once 120% of the Expected Term Year Net Energy Production is achieved, no further payments will be calculated for the remaining TOD Periods within any remaining months of the current Term Year.

3. Fixed Price Component.

The fixed price component for all TOD Periods shall be the amount in the following table for the year of the Term Start Date:

Year	$/kwh
2012	0.02000
2013	0.02033
2014	0.02068
2015	0.02104
2016	0.02140
2017	0.02142
2018	0.02145
2019	0.02147

2020	0.02149

4. Variable Price Component Calculation.

The Variable Price Component is calculated in dollars as follows:

[(Monthly bidweek gas price + Intrastate gas transportation rate)/1,000,000* Heat Rate] + Variable O&M

(a) Monthly bidweek gas price shall be in dollars per MMBTU calculated as the simple average of natural gas market price indices from Natural Gas Week, Natural Gas Intelligence and Platts Gas Daily at the Southern California border (Topock).

(b) Intrastate gas transportation rate shall be in dollars per MMBTU the tariffed intrastate gas transportation rate for large electric generators, pursuant to Southern California Gas Company tariff schedules GT-TLS, G-BTS and G-MSUR as such tariff schedules may be amended, renamed, or changed from time to time.

(c) Heat Rate, pursuant to CPUC Decision 09-12-042 (as modified by CPUC Decisions 10-04-055, 10-12-055, and 11-04-033) shall be equal to:

6,924 Btu/kWh.

(d) Variable O&M shall be the amount in the following table for the year in which the payment is being calculated. For years after 2020, Variable O&M shall be the 2020 payment multiplied by 1.02, compounded for each year beyond 2020.

Variable O&M

Year	$/kwh
2012	0.00311
2013	0.00316
2014	0.00322
2015	0.00329
2016	0.00335
2017	0.00342
2018	0.00349
2019	0.00356
2020	0.00364

5. Time of Delivery Periods and Allocation Factors.

Time of Delivery Periods.

TOD Period	*Summer* *Jun 1st – Sep 30th*	***Winter*** ***Oct 1st – May 31st***	*Applicable Days*
On-Peak	Noon – 6:00 p.m.	Not Applicable.	Weekdays except Holidays.
Mid-Peak	8:00 a.m. – Noon	8:00 a.m. - 9:00 p.m.	Weekdays except Holidays.
	6:00 p.m. – 11:00 p.m.		Weekdays except Holidays.
Off-Peak	11:00 p.m. – 8:00 a.m.	6:00 a.m. – 8:00 a.m.	Weekdays except Holidays.
		9:00 p.m. – Midnight	Weekdays except Holidays.
	Midnight – Midnight	6:00 a.m. – Midnight	Weekends and Holidays.
Super-Off-Peak	Not Applicable.	Midnight – 6:00 a.m.	Weekdays, Weekends and Holidays.

"Holiday", as used in the above table, means New Year's Day, Presidents' Day, Memorial Day, Independence Day, Labor Day, Veterans Day, Thanksgiving Day, and Christmas Day. When a Holiday falls on a Sunday, the following Monday will be recognized as a Holiday. No change will be made for Holidays falling on Saturday.

Product Payment Allocation Factors

Season	*TOD Period*	*Calculation Method*	*Energy-Only Deliverability Status* *Product Payment Allocation Factor*	*Full Capacity Deliverability Status* *Product Payment Allocation Factor*
Summer	On-Peak	Fixed Value.	1.11	2.77
	Mid-Peak	Fixed Value.	1.13	1.35
	Off-Peak	Fixed Value.	0.96	0.86
Winter	Mid-Peak	Fixed Value.	1.02	0.96
	Off-Peak	Fixed Value.	1.00	0.89
	Super-Off-Peak	Fixed Value.	0.92	0.82

6. Location Bonus.

If the Generating Facility is located in a "High-Value Area", as set forth below, each Monthly Contract Payment for the entire Term shall receive a Location Bonus calculated as follows:

Location Bonus = Sum of monthly TOD Periodn Payments x 0.10.

The Generating Facility shall be deemed to be located in a High-Value Area if it is interconnected to Buyer's electric system at a location which, in the year of the Effective Date, is identified pursuant to CPUC Decision 09-12-042 (as modified by CPUC Decisions 10-04-055, 10-12-055, and 11-04-033) as a "Local Resource Adequacy" area based on the most recent CAISO Local Capacity Requirement Study adopted by the CPUC.

**** End of Exhibit C ****

EXHIBIT D

Credit and Collateral Requirements

1. Financial Information.

(a) If requested by Buyer, Seller shall deliver to Buyer the following financial statements, which in all cases shall be for the most recent accounting period and prepared in accordance with GAAP:

(i) Within one hundred and twenty (120) days following the end of each fiscal year, a copy of Seller's annual report containing audited consolidated financial statements (income statement, balance sheet, statement of cash flows and statement of retained earnings and all accompanying notes) for such fiscal year, setting forth in each case in comparative form the figures for the previous fiscal year; and

(ii) Within sixty (60) days after the end of each of its first three fiscal quarters of each fiscal year, a copy of Seller's quarterly report containing consolidated financial statements (income statement, balance sheet, statement of cash flows and statement of retained earnings and all accompanying notes) for such fiscal quarter and the portion of the fiscal year through the end of such quarter, setting forth in each case in comparative form the figures for the previous fiscal year;

provided, *however*, that if Seller is not an SEC reporting company or if the financial statements required under Sections 1(a)(i) or (ii) of this Exhibit D are not audited financial statements, a Responsible Officer of Seller will certify such financial statements as being in accordance with all Applicable Laws, prepared in accordance with GAAP and fairly stated in all material respects (subject to normal year-end audit adjustments for the quarterly financial statements); *provided further*, that such information must be provided only to those employees of Buyer that need to know such information for financial risk management purposes and may not be disclosed to third parties except as permitted under Section 9.09.

(b) For purposes of the requirement set forth in Section 1(a) of this Exhibit D:

(i) If Seller's or its Guarantor's financial statements are publicly available electronically on the website of Seller, its Guarantor or the SEC, then Seller is deemed to have met this requirement; and

(ii) Should any such financial statements not be available on a timely basis due to a delay in preparation or certification, such delay is not an Event of Default so long as Seller diligently pursues the preparation, certification and delivery of the statements.

2. Performance Assurance.

(a) Posting Performance Assurance. On or before the Term Start Date, Seller shall post Performance Assurance with Buyer and shall maintain the Performance Assurance Amount at all times on and after the Term Start Date until such time as Seller has satisfied all monetary obligations which survive any termination of this Agreement, not to exceed three hundred and sixty-five (365) days following the Term End Date.

The Performance Assurance Amount shall be either in the form of cash or Letter of Credit acceptable to Buyer; *provided*, *however*, that if, as of the Term Start Date, Seller has posted the Development Security in the form of cash or a Letter of Credit and Buyer has either not returned the Development Security to Seller or given Seller Notice, in accordance with this Exhibit D, of its determination regarding the disposition of the Development Security by such date, then Seller may withhold the portion of the Performance Assurance Amount equal to the Development Security or any portion thereof held by Buyer until three Business Days following the later of Seller's receipt or forfeiture of the Development Security or any portion thereof pursuant to Section 4(c) or (e) of this Exhibit D, after which Seller shall be obligated to post the full Performance Assurance Amount.

In lieu of cash or a Letter of Credit, Buyer may accept a Guaranty Agreement, in accordance with Section 2(c) of this Exhibit D, from a Guarantor acceptable to Buyer, to satisfy Seller's Performance Assurance obligation.

(b) Letters of Credit. Performance Assurance provided in the form of a Letter of Credit is subject to the following provisions:

(i) Each Letter of Credit must be maintained for the benefit of Buyer;

(ii) Seller shall:

(1) Renew or cause the renewal of each outstanding Letter of Credit on a timely basis as provided in the relevant Letter of Credit;

(2) If the bank that issued an outstanding Letter of Credit has indicated its intent not to renew such Letter of Credit, provide alternative Performance Assurance acceptable to Buyer at least thirty (30) days before the expiration of the outstanding Letter of Credit or within five (5) Business Days of such indication by the bank, whichever is later; and

(3) If the bank issuing a Letter of Credit fails to honor Buyer's properly documented request to draw on an outstanding Letter of Credit, provide alternative Performance Assurance acceptable to Buyer within three Business Day after such refusal;

(iii) Upon, or at any time after, the occurrence of a Letter of Credit Default, Seller shall provide to Buyer either a substitute Letter of Credit or alternative Performance Assurance acceptable to Buyer, in each case on or before the third Business Day after the occurrence thereof (or the fifth Business Day after the occurrence thereof if only Section a) in the definition of "Letter of Credit Default" in Exhibit A applies); and

(iv) Upon the occurrence and continuation of an Event of Default by Seller, or if an Early Termination Date has occurred or been designated as a result of an Event of Default by Seller for which there exist any unsatisfied payment obligations, then Buyer may draw on any undrawn portion of any outstanding Letter of Credit by submitting to the bank issuing such Letter of Credit one or more certificates specifying that such Event of Default or Early Termination Date has occurred and is continuing.

Cash proceeds received by Buyer from drawing upon the Letter of Credit shall be deemed Performance Assurance as security for Seller's obligations to Buyer and Buyer shall have the rights and remedies set forth in Section 3 of this Exhibit D with respect to such cash proceeds.

Notwithstanding Buyer's receipt of cash proceeds of a drawing under the Letter of Credit, Seller shall remain liable for any (1) failure to provide or maintain sufficient Performance Assurance, or (2) any amounts owing to Buyer and remaining unpaid after the application of the amounts so drawn by Buyer.

(v) In all cases, the costs and expenses of establishing, renewing, substituting, canceling, and increasing the amount of a Letter of Credit shall be borne by Seller.

(c) Guaranty Agreement. If Seller's Performance Assurance obligation is satisfied by a Guaranty Agreement, such agreement shall be in the form of Exhibit K executed by the Guarantor identified in Section 1.06(d) or other party, in each case acceptable to Buyer and meeting the Credit Rating requirements for the Guarantor set forth immediately below. The Guarantor shall maintain a Credit Rating of at least:

(i) "BBB-" from S&P and "Baa3" from Moody's, if it is rated by both S&P and Moody's; or

(ii) "BBB-" from S&P or "Baa3" from Moody's if it is rated by either S&P or Moody's but not by both.

If at any time the Guarantor fails to maintain such Credit Ratings, Seller shall provide to Buyer Performance Assurance in the form of cash or a Letter of Credit, or a replacement Guaranty Agreement from a party acceptable to Buyer, within five Business Days of such failure by the Guarantor.

3. First Priority Security Interest in Cash or Cash Equivalent Collateral. To secure its obligations under this Agreement, and until released as provided herein, Seller grants to Buyer a present and continuing first-priority security interest ("Security Interest") in, and lien on (and right to net against), and assignment of the Development Security (if applicable), Performance Assurance, any other cash collateral and cash equivalent collateral posted pursuant to Sections 2 and 4 of this Exhibit D and any and all interest thereon or proceeds resulting therefrom or from the liquidation thereof, whether now or hereafter held by, on behalf of, or for the benefit of Buyer, and Seller agrees to take such action as Buyer reasonably requires in order to perfect Buyer's Security Interest in, and lien on (and right to net against), such collateral and any and all proceeds resulting therefrom or from the liquidation thereof.

   Upon or any time after the occurrence of, and during the continuation of, an Event of Default caused by Seller or an Early Termination Date resulting from an Event of Default caused by Seller, Buyer may do any one or more of the following:

   (a) Exercise any of its rights and remedies with respect to all Development Security and Performance Assurance, including any such rights and remedies under law then in effect;

   (b) Draw on any outstanding Letter of Credit issued for its benefit; and

   (c) Liquidate all Development Security and Performance Assurance then held by or for the benefit of Buyer free from any claim or right of any nature whatsoever of Seller, including any equity or right of purchase or redemption by Seller.

   Buyer shall apply the proceeds of the collateral realized upon the exercise of any such rights or remedies to reduce Seller's obligations under this Agreement (Seller shall remain liable for any amounts owing to Buyer after such application), subject to Buyer's obligation to return any surplus proceeds remaining after such obligations are satisfied in full.

4. Development Security.

   (a) Introduction. Development Security shall be held by Buyer as security for Seller's meeting the Term Start Date. Before the Term Start Date, Seller must deliver to Buyer certificates from a California-licensed professional engineer qualified to make a representation that that Seller has installed the equipment sufficient to provide the As-Available Contract Capacity designated by Seller.

   (b) Development Security. Seller shall post such Development Security in accordance with the following terms and conditions:

      (i) Seller shall post a development fee (the "Development Security") in the amount of $20 per kW of the As-Available Contract Capacity on or before the 30th day following the Effective Date. The Development Security shall

be held by Buyer and shall be in the form of either a cash deposit or a Letter of Credit; and

(ii) If Seller establishes the Development Security by means of a Letter of Credit, such Letter of Credit shall be substantially in the form of Exhibit L.

(c) Forfeiture of Development Security for Failure to Commence Term by the Term Start Date; Extension of the Term Start Date.

(i) Failure to Meet the Term Start Date. Subject to Seller's right to extend the Term Start Date as provided in Section 4(c)(ii) of this Exhibit D or as a result of a Force Majeure as to which Seller is the Claiming Party (subject to Section 5.03), if the Term does not commence on or before the Term Start Date, Buyer may retain the entire Development Security (if applicable) and, if not already terminated, terminate this Agreement, and neither Party shall have liability for damages for failure to deliver or purchase the Product after the effective date of such termination.

(ii) Daily Delay Liquidated Damages to Extend Term Start Date. Subject to limitations set forth in Section 1.01, Seller may elect to delay the Term Start Date by paying to Buyer liquidated damages in an amount equal to one percent of the Development Security per day for each day (or portion thereof) from and including the original Term Start Date to and excluding the actual Term Start Date ("Daily Delay Liquidated Damages").

To extend the Term Start Date, Seller must, at the earliest possible time, but no later than 6:00 a.m. on the first day of the proposed extension, provide Buyer with Notice of its election to extend the Term Start Date along with its estimate of the duration of the extension and its payment of Daily Delay Liquidated Damages for the full estimated Term Start Date extension period.

Seller may further extend the Term Start Date beyond the original Term Start Date extension period subject to the same terms applicable to the original Term Start Date extension.

The Daily Delay Liquidated Damages payments applicable to days included in any Term Start Date extension shall be nonrefundable and are in addition to and not to be considered part of the Development Security.

Seller shall be entitled to a refund (without interest) of any estimated Daily Delay Liquidated Damages payments paid by Seller which exceed the amount required to cover the number of days by which the Term Start Date was actually extended.

In no event may Seller extend the Term Start Date for more than a total of 180 days by the payment of Daily Delay Liquidated Damages.

(d) Full Return of Development Security. The Development Security shall be returned to Seller in accordance with the following procedure:

(i) Subject to Seller commencing the Term by the Term Start Date, as the Term Start Date may have been extended in accordance with Section 4(c)(ii) of this Exhibit D or as a result of a Force Majeure as to which Seller is the Claiming Party (subject to Section 5.03), Seller demonstrates the As-Available Contract Capacity on or before the Firm Operation Date by delivering to Buyer certificates from a California-licensed professional engineer qualified to make a representation that Seller has installed the equipment sufficient to provide the entire As-Available Contract Capacity designated by Seller.

(e) Deficient Installation of As-Available Contract Capacity; Partial Forfeiture and Partial Return of the Development Security. If, on or before the Firm Operation Date, Seller does not demonstrate any portion of the As-Available Contract Capacity or only demonstrates a portion of the As-Available Contract Capacity by delivering to Buyer certificates from a California-licensed professional engineer qualified to make a representation setting forth the As-Available Contract Capacity, then Seller will only be entitled to a return of the portion of the Development Security posted by Seller equal to the product of $20 per kW times the kilowatts of As-Available Contract Capacity which Seller has demonstrated, if any.

Seller shall forfeit and Buyer shall be entitled to retain the balance of the Development Security.

In addition, as of the Firm Operation Date, the Performance Assurance Amount for the Performance Assurance required to be posted and maintained pursuant to Section 2 of this Exhibit D shall be calculated using the adjusted As-Available Contract Capacity, and any amount of Performance Assurance in excess of that required for the adjusted As-Available Contract Capacity shall be returned to Seller.

(f) Seller shall provide Notice to Buyer of its request for a refund of the Development Security.

5. Interest Payments on Cash Deposits.

(a) Buyer shall make monthly Simple Interest Payments, calculated using the Federal Funds Effective Rate, to Seller on cash amounts posted for the Development Security and Performance Assurance.

(b) Upon receipt of a monthly invoice that sets forth the calculation of the Simple Interest Payment amount due, Buyer shall make payment thereof on or before the third Business Day of the first month after the last month to which the invoice relates, so long as such date is after the day on which such invoice is received; *provided*, *however*, that:

(i) No Event of Default has occurred and is continuing with respect to Seller; and

(ii) No Early Termination Date for which any unsatisfied payment obligation of Seller exists, has occurred or has been designated as the result of an Event of Default by Seller.

(c) On or after the occurrence of an Event of Default by Seller or an Early Termination Date as a result of an Event of Default by Seller, Buyer shall retain any such Simple Interest Payment amount as an additional Development Security amount or a Performance Assurance amount hereunder until:

(i) In the case of an Early Termination Date, the obligations of Seller under this Agreement have been satisfied; or

(ii) In the case of an Event of Default, for so long as such Event of Default is continuing.

**** End of Exhibit D ****

EXHIBIT E

Scheduling Coordinator Services

1. Designation of Buyer as Scheduling Coordinator.

   (a) At least thirty (30) days before the Term Start Date, Seller shall take all actions and execute and deliver to Buyer and the CAISO all documents necessary to authorize or designate Buyer as Scheduling Coordinator with the CAISO effective as of the Term Start Date.

   (b) During the Term, Seller may not authorize or designate any other party to act as Scheduling Coordinator, nor shall Seller perform for its own benefit the duties of Scheduling Coordinator.

   (c) Buyer shall submit bids and schedules to the CAISO in accordance with the CAISO Tariff and the Eligible CHP Facility's Participating Generator Agreement.

   (d) Buyer shall submit all required notices and updates regarding each Generating Unit's or the Generating Facility's status, as applicable, to the CAISO in accordance with the CAISO procedures.

   (e) Seller is not entitled to any Monthly Capacity Payment until Buyer is fully authorized as Scheduling Coordinator for the Generating Facility; *provided, however*, that Buyer may not take, or not refrain from taking, any action if the result would be to delay such authorization.

2. Buyer's Scheduling Responsibilities. Pursuant to the CAISO Tariff, Buyer shall be responsible for the following:

   (a) Using the Forecast submitted by Seller to Buyer pursuant to Exhibit G, including updated Forecasts to the extent reasonably practicable, to forecast Seller's expected generation using Buyer's forecasting model ("Buyer Projected Energy Forecast") in any given hour;

   (b) Adjusting Buyer Projected Energy Forecast for forecasted electric energy line losses in accordance with the amount of electric energy Seller is expected to deliver to the Delivery Point;

   (c) Submitting the adjusted Forecasts to the CAISO as Scheduling Coordinator Schedules (as defined in the CAISO Tariff); and

   (d) Receiving notification of the final Schedules from the CAISO.

3. Notices. As Scheduling Coordinator, Buyer shall submit all notices and updates required under the CAISO Tariff and Applicable Laws regarding each Generating Unit's or the Generating Facility's status, as applicable, to the CAISO, including all SLIC Outage requests, SLIC Forced Outages, or CAISO Forced Outage Reports.

4. Scheduling Fees. In accordance with Section 4.02, Buyer shall invoice to Seller and Seller shall pay to Buyer the following Scheduling Fees:

   (a) SC Set-Up Fee. The SC Set-Up Fee is equal to the costs Buyer incurs as a result of the Generating Units or the Generating Facility registration, as applicable, as well as installation, configuration, and testing of all equipment and software necessary, in Buyer's sole discretion, to Schedule the Generating Unit or the Generating Facility, as applicable, in accordance with the CAISO Tariff. Buyer's invoice to Seller shall provide a detailed accounting of all costs and charges encompassed in the SC Set-Up Fee, including separate line items for registration charges, equipment costs, software costs, and labor costs (including hourly rate if applicable) itemized for registration, equipment installation, configuration, testing and software related charges. Buyer estimates that the SC Set-up Fee for this Agreement will equal $2,000 or less.

   (b) Monthly Scheduling Fee. The Monthly Scheduling Fee will be as forth in the following table.

As-Available Contract Capacity (kW)	**Monthly Scheduling Fee**
Less than 10,000	$2,500
10,000 – 20,000	$5,000

5. CAISO Settlements. As Scheduling Coordinator, Buyer shall be responsible for all settlement functions with the CAISO related to the Generating Units or the Generating Facility, as applicable. Seller shall cooperate with Buyer in Buyer's performance of any settlement functions, and Seller shall promptly deliver to Buyer, or provide Buyer access to, all Generating Unit or the Generating Facility, as applicable, data necessary for CAISO settlements and any correspondence or communications with CAISO related to the Generating Units or the Generating Facility, as applicable, including any invoices or settlement data, in the mutually agreed upon format reasonably requested by Buyer.

   Buyer shall render a separate invoice to Seller for all CAISO Charges ("CAISO Charges Invoice") for which Seller is responsible under this Agreement as described in Exhibit H, in accordance with the applicable billing and payment methodologies utilized for the specific CAISO Charge as set forth in the CAISO Tariff. CAISO Charges Invoices shall be rendered after final settlement information becomes available from the CAISO that identifies any CAISO Charges. At Seller's request, Buyer shall provide Seller with an invoice detailing all Generating Facility CAISO Charges by individual CAISO Charge codes or types used by CAISO to identify individual CAISO Charges including a copy of all supplemental and/or supporting documentation provided by the CAISO to Buyer in the settlement process.

   Seller shall pay the amount of CAISO Charges Invoices on or before the later of the 20th day of each month, or tenth day after receipt of the CAISO Charges Invoice or, if such

day is not a Business Day, then on the next Business Day. If Seller fails to pay a CAISO Charges Invoice within such timeframe, Buyer may offset any amounts owing to it for these CAISO Charges Invoices as set forth in Section 4.02.

6. Disputes and Adjustments of CAISO Invoices. The Parties agree that all CAISO Charges Invoices are subject to the CAISO Tariff and may be adjusted by the CAISO, or disputed by Buyer, as Scheduling Coordinator, in accordance with the CAISO Tariff. The Parties agree that all CAISO Charges Invoices are subject to dispute between the Parties in accordance with this Agreement. Notwithstanding anything to the contrary contained in this Agreement, the Parties agree that the obligations under this Exhibit E with respect to the payment of CAISO Charges Invoices, or the adjustment of such CAISO Charges Invoices, shall survive the expiration or termination of this Agreement for a period of three hundred and sixty-five (365) days beyond the time period which CAISO may adjust, modify or change any previously issued invoice, or any charges or revenues set forth on such invoice pursuant to the CAISO Tariff.

7. Termination of Buyer as Scheduling Coordinator. At least 30 days before the expiration of the Term or as soon as an Early Termination Date is declared (regardless of which Party declared it), the Parties will take all actions necessary to terminate the designation of Buyer as Scheduling Coordinator as of 11:59 p.m. on the final date of the Term ("SC Replacement Date"). Such actions include the following: (a) Seller shall (i) submit to the CAISO a designation of a new Scheduling Coordinator to replace Buyer effective as of the SC Replacement Date and (ii) cause its newly designated Scheduling Coordinator to submit a letter to the CAISO accepting the designation; and (b) Buyer shall submit a letter to the CAISO resigning as Scheduling Coordinator effective as of the SC Replacement Date.

**** End of Exhibit E ****

EXHIBIT F

Milestone Progress Reporting Form

1. Introduction. This Exhibit F is only applicable if the Generating Facility is a New Eligible CHP Facility. Seller shall prepare a written milestone progress report as set forth in Section 3.12 on its progress relative to the:

   (a) Installation of the CAISO-Approved Meters and Telemetry System;

   (b) Installation of the Telemetry System as required by the CAISO Tariff; and

   (c) Work on other agreements with the CAISO and the Transmission Provider.

2. Format. The report must be sent via e-mail in the form of a single Adobe Acrobat file or facsimile to Buyer's Contract Administrator, as noted in Exhibit J, on the fifth Business Day of each month. Each such milestone progress report must include the following items:

   (a) Cover page;

   (b) Brief Generating Facility description;

   (c) Site plan of the Generation Facility;

   (d) Description of any planned changes to the Generating Facility and Site description in Exhibit B;

   (e) Bar chart schedule showing progress on achieving the Milestone Schedule;

   (f) PERT or GANT chart showing critical path schedule of major items and activities;

   (g) Summary of activities during the previous month;

   (h) Forecast of activities scheduled for the current month;

   (i) Written description about the progress relative to the Milestone Schedule;

   (j) List of issues that could potentially impact the Milestone Schedule;

   (k) Enumeration and schedule of any support or actions requested of Buyer;

   (l) Progress and schedule of all material agreements, contracts, Permits, approvals, technical studies, financing agreements and major equipment purchase orders showing the start dates, completion dates, and completion percentages; and

   (m) List of items required under Section 3.12.

**** End of Exhibit F ****

EXHIBIT G

Seller's Forecasting Submittal and Accuracy Requirements

1. General Requirements. The Parties shall abide by the Forecasting requirements and procedures described below and shall agree upon reasonable changes to these requirements and procedures from time to time as necessary to:

   (a) Comply with the CAISO Tariff;

   (b) Accommodate changes to their respective generation technology and organizational structure; and

   (c) Address changes in the Operating and Scheduling procedures of Seller, Buyer and the CAISO, including automated Forecast and outage submissions.

2. Seller's Forecasting Submittal Requirements for all Generating Facilities.

   (a) 30-Day Forecast.

   In the case of a New Eligible CHP Facility, no later than 30 days before the Term Start Date (or, in the case of a New Eligible CHP Facility no later than 30 days before the commencement of Parallel Operation), Seller shall provide Buyer with a Forecast for the 30-day period commencing on the start of the Term (or, if applicable, Parallel Operation) using the Web Client.

   In the case of a New Eligible CHP Facility, if, after submitting the Forecast pursuant to this Section 2(a), if Seller learns that Parallel Operation will occur on a date and time other than that reflected on the Forecast, Seller shall provide an updated Forecast reflecting the new Parallel Operation date at the earliest practicable time but no later than 5:00 p.m. PPT on the Wednesday before the new Parallel Operation date, if Seller has learned of the new Parallel Operation date by that time, but in no event less than three Business Days before the new Parallel Operation date.

   If the Web Client becomes unavailable, Seller shall provide Buyer with the Forecast by e-mail or by telephoning Buyer's Generation Operations Center, at the e-mail address or telephone number(s) listed in Exhibit J.

   The Forecast, and any updated Forecasts provided pursuant to this Section 2, shall:

   (i) Not include any anticipated or expected electric energy line losses between the Delivery Point and the CAISO-Controlled Grid; and

   (ii) Limit hour-to-hour Forecast changes to no less than 250 kWh during any period when the Web Client is unavailable. Seller shall have no restriction on hour-to-hour Forecast changes when the Web Client is available.

(b) Weekly Update to 30-Day Forecast. Commencing on or before 5:00 p.m. PPT of the Wednesday before the first week covered by the Forecast provided pursuant to Section 2(a) of this Exhibit G, and on or before 5:00 p.m. PPT every Wednesday thereafter until the Term End Date, Seller shall update the Forecast for the 30-day period commencing on the Sunday following the weekly Wednesday Forecast update submission. Seller shall use the Web Client, if available, to supply this weekly update or, if the Web Client is not available, Seller shall provide Buyer with the weekly Forecast update by e-mailing or telephoning Buyer's Generation Operations Center, at the e-mail address or telephone number(s) listed in Exhibit J.

(c) Further Update to 30-Day Forecast. As soon as reasonably practicable, Seller shall provide Forecast updates related to Buyer's Scheduled daily, hourly and real-time deliveries from the Generating Facility for any cause, including changes in Site ambient conditions, a Forced Outage, and a Real-Time Forced Outage, which results in a material change to the Generating Facility's deliveries (whether in part or in whole). This updated Forecast pursuant to this Exhibit G must be submitted to Buyer via the Web Client by no later than:

(i) 5:00 p.m. PPT on the day before the Trading Day impacted by the change, if the change is known to Seller at that time;

(ii) The Hour-Ahead Scheduling Deadline, if the change is known to Seller at that time; or

(iii) If the change is not known to Seller by the timeframes indicated in (i) or (ii) immediately above, no later than 20 minutes after Seller becomes aware of the event which caused the expected energy production change.

Seller's updated Forecast must contain the following information:

(w) The beginning date and time of the event resulting in the availability of the Generating Facility and expected energy production change;

(x) The expected ending date and time of the event:

(y) The expected energy production, in MWh; and

(z) Any other information required by the CAISO as communicated to Seller by Buyer.

*** *End of Exhibit G* ***

EXHIBIT H
CAISO Charges

Buyer, as Scheduling Coordinator for the Generating Facility, shall pay all CAISO Charges and receive all CAISO Revenues; *provided*, *however*, if at any time after the Term Start Date:

1. The CAISO implements or has implemented any sanction or penalty related to Scheduling, outage reporting or generator Operation, and any such sanctions or penalties are imposed on the Generating Facility or to Buyer as Scheduling Coordinator for the Generating Facility due solely to the actions or inactions of Seller, then such sanctions or penalties will be Seller's responsibility;

2. Seller or any third party dispatches any portion of the As-Available Contract Capacity for the benefit of any party other than Buyer or a Site host in respect of the Host Site, then Seller shall indemnify, defend, and hold Buyer harmless against any CAISO Charges;

3. There is a CAISO or Transmission Provider declared Emergency and Seller fails to meet Seller's obligations associated with any CAISO or Transmission Provider instruction or request (as may be communicated by Buyer as Scheduling Coordinator), as the case may be, to: (a) curtail output, or (b) reschedule a Planned Outage set to occur during an Emergency, then, in each case, Seller shall indemnify, defend, and hold Buyer harmless against any CAISO Charges associated with the failure to respond to such Emergency;

4. If the Generating Facility is PIRP eligible and is not certified as a PIRP resource for any reason, then Seller shall indemnify, defend, and hold Buyer harmless against all CAISO Charges associated with the energy generated and delivered from the Generating Facility; or

5. Buyer, as Seller's Scheduling Coordinator, is subject to either Non-Availability Charges or Availability Incentive Payments, or both, during a month within the Resource Adequacy Compliance Year (as defined by CAISO Tariff), then any such Non-Availability Charges or Availability Incentive Payments shall be offset and the net value shall be entered into Seller's account for the applicable month pursuant to Section 3.22.

If any of Sections 1 through 4 of this Exhibit H apply and the Generating Facility is subject to an Uninstructed Deviation Penalty, Seller will not be required to pay the SDD Energy Adjustment and, instead, shall be responsible for all applicable Uninstructed Deviation Penalty charges for the Generating Facility.

**** End of Exhibit H ****

EXHIBIT I

Scheduling and Delivery Deviation Adjustments

Seller or Buyer, as the case may be, shall be responsible for the following scheduling and delivery deviation adjustments ("SDD Adjustments") with respect to the Generating Facility:

1. SDD Energy Adjustment. An adjustment will be calculated for each Settlement Interval in a month if the Metered Energy is either (a) less than the Performance Tolerance Band Lower Limit in any Settlement Interval or (b) greater than the Performance Tolerance Band Upper Limit in any Settlement Interval ("SDD Energy Adjustment"). When the SDD Energy Adjustment is negative, Seller shall make a payment to Buyer and when the SDD Energy Adjustment is positive, Seller shall receive a credit from Buyer. The SDD Energy Adjustment is calculated as follows:

   If A < D, then SDD Energy Adjustment= (D – A) x (EP – P)

   or

   If A > E, then SDD Energy Adjustment = (A – E) x (P – EP)

   Otherwise, the SDD Energy Adjustment = 0

   where:

   A = Metered Energy for the Settlement Interval;

   B = Seller's Final Energy Forecast based on the hourly forecasts made pursuant to Exhibit G corresponding to the Settlement Interval;

   C = Performance Tolerance Band =

   Three percent of the Seller's Final Energy Forecast divided by the number of Settlement Intervals in such hour;

   D = Performance Tolerance Band Lower Limit = (B – C);

   E = Performance Tolerance Band Upper Limit = (B + C);

   EP = TOD Period payment, as calculated in accordance with Exhibit C, divided by Metered Energy applicable to the Settlement Interval; and

   P = Market Price for the Generator's PNode as published by the CAISO on OASIS for the Settlement Interval.

2. SDD Administrative Charge. Seller shall make a payment to Buyer (the "SDD Administrative Charge") for each Settlement Interval in a month if Metered Energy (i) exceeds the Performance Tolerance Band Upper Limit or (ii) is less than the Performance

Tolerance Band Lower Limit, in any Settlement Interval. The SDD Administrative Charge is calculated as follows:

If A > (B + C) or A < (B – C), then:

SDD Administrative Charge = (Absolute Value (B – A) – C) x Uninstructed Deviation GMC Rate.

Otherwise, the SDD Administrative Charge = 0.

*** *End of Exhibit I* ***

EXHIBIT J

Notice List

HOUWELING NURSERIES OXNARD, INC.	SOUTHERN CALIFORNIA EDISON COMPANY
All Notices are deemed provided in accordance with Section 9.07 if made to the address, facsimile numbers or e-mail addresses provided below:	All Notices are deemed provided in accordance with Section 9.07 if made to the address, facsimile numbers or e-mail addresses provided below:
Contract Sponsor: Houweling Nurseries Oxnard, Inc. Attn: Casey Houweling Street: 645 W. Laguna Road City: Camarillo, California 93012 Phone: (604) 613-0072 Facsimile: (805) 271-5107 E-mail: casey.houwelings@houwelings.com	Contract Sponsor: Attn: Steven Eisenberg Street: 2244 Walnut Grove Avenue City: Rosemead, California 91770 Phone: 626-302-4023 Facsimile: 626-302-9622 E-mail: steven.eisenberg@sce.com
Reference Numbers: Duns: 94-938-3780 Federal Tax ID Number: 77-0419467	Reference Numbers: Duns: 006908818 Federal Tax ID Number: 95-1240335
Contract Administration: Attn: Peter Cummings Phone: (604) 760-7740 Facsimile: (805) 271-5107 E-mail: peter@houwelings.com	Contract Administration: Attn: Power Contract Administrator Phone: 626-302-9622 Facsimile: 626-302-9622 E-mail: david.cox@sce.com
Forecasting: Attn: Richard Vanderburg Phone: (805) 857-4948 Facsimile: (805) 271-5107 E-mail: Richard.vanderburg@houwelings.com	Forecasting: Attn: Preschedule Operations Phone: 626.307.4487 or 626.307.4420 Facsimile: 626.302.3409 E-mail: presched@sce.com
Day-Ahead Forecasting: Richard Vanderburg Phone: (805) 857-4948 Facsimile: (805) 271-5107 E-mail: Richard.vanderburg@houwelings.com	Day-Ahead Forecasting: Phone: (626) 307-4425 or (626) 307-4420 Facsimile: (626) 307-4416 E-mail: presched@sce.com
Real-Time Forecasting: Richard Vanderburg Phone: (805) 857-4948 Facsimile: (805) 271-5107 E-mail: Richard.vanderburg@houwelings.com	Real-Time Forecasting: Phone: (626) 307-4405 or (626) 307-4453 Facsimile: (626) 307-4416 E-mail: realtime@sce.com

Payment Statements: Attn: Peter Cummings Phone: (604) 760-7740 Facsimile: (805) 271-5107 E-mail: peter@houwelings.com	Payment Statements: Attn: Power Procurement - Finance Phone: 626-302-3277 Facsimile: 626-302-3276 E-mail:PPFDPowerSettle@sce.com
CAISO Charges and CAISO Sanctions: Attn: Peter Cummings Phone: (604) 760-7740 Facsimile: (805) 271-5107 E-mail: peter@houwelings.com	CAISO Charges and CAISO Sanctions: Attn: Power Procurement - Finance Phone: 626-302-3277 Facsimile: 626-302-3276 E-mail:PPFDPowerSettle@sce.com
Payments: Attn: Peter Cummings Phone: (604) 760-7740 Facsimile: (805) 271-5107 E-mail: peter@houwelings.com	Payments: Attn: Power Procurement - Finance Phone: 626-302-3277 Facsimile: 626-302-3276 E-mail:PPFDPowerSettle@sce.com
Wire Transfer: BNK: Wells Fargo Bank, 1628 Browning Road, Columbia, SC USA, 29226 ABA: 053101561 ACCT: 2079900477762	Wire Transfer: BNK: JP Morgan Chase Bank ABA: 021000021 ACCT: 323-394434
Credit and Collections: Attn: Peter Cummings Phone: (604) 760-7740 Facsimile: (805) 271-5107 E-mail: peter@houwelings.com	Credit and Collections: Attn: Manager of Credit and Collateral Phone: 626-302-1129 Facsimile: 626-302-2517 Email: scecollateral@sce.com
With additional Notices of an Event of Default or Potential Event of Default to: Attn: Casey Houweling Phone: (604) 613-0072 Facsimile: (805) 271-5107 E-mail: casey.houweling@houwelings.com	With additional Notices of an Event of Default or Potential Event of Default to: Attn: Director and Managing Attorney, Power Procurement Phone: 626-302-6897 Facsimile: 626-302-1935 Email: Beth.Fox@sce.com
Lender: Farm Credit West Attn: Mark Satterburg Phone: (805) 684-8771 Facsimile: E-mail: mark.satterburg@farmcreditwest.com	Lender: Attn: Phone: Facsimile: E-mail:

**** End of Exhibit J ****

EXHIBIT K

Form of Guaranty Agreement

1. Guaranty. For valuable consideration, _____*[Guarantor's legal name]*_____, _____*[legal status]*_ ("Guarantor") guarantees payment to _____*[Buyer's legal name]*_, a California corporation ("Beneficiary"), its successors and assigns, of all amounts owed to Beneficiary by _____*[Seller's legal name]*_, _____*[legal status]*_ ("Principal") under that certain Power Purchase and Sale Agreement between Beneficiary and Principal dated _____*[date]*_, as amended from time to time ("Agreement") (said amounts are hereinafter referred to as the "Obligations").

   Initially capitalized words that are used but not otherwise defined in this agreement ("Guaranty") shall have the meanings given them in the Agreement.

   Upon the failure or refusal by Principal to pay all or any portion of the Obligations, the Beneficiary may make a demand upon the Guarantor.

   Such demand shall be in writing and shall state the amount Principal has failed to pay and an explanation of why such payment is due, that all cure periods have expired, and with a specific statement that Beneficiary is calling upon Guarantor to pay under this Guaranty.

   Guarantor shall promptly, but in no event less than ten Business Days following demand by Beneficiary, pay such Obligations in immediately available funds.

   The obligations of Guarantor hereunder is not subject to any counterclaim, setoff, withholding, or deduction unless required by applicable law.

   A payment demand satisfying the foregoing requirements shall be deemed sufficient notice to Guarantor that it must pay the Obligations.

2. Guaranty Limit. Subject to Paragraph 13, the liability of Guarantor hereunder may not exceed $_____ in the aggregate, which amount shall include all interest that has accrued on any amount owed hereunder.

3. Guaranty Absolute. Guarantor agrees that its obligations under this Guaranty are irrevocable, absolute, independent and unconditional and is not affected by any circumstance which constitutes a legal or equitable discharge of a guarantor. In furtherance of the foregoing and without limiting the generality thereof, Guarantor agrees as follows:

   (a) The liability of Guarantor under this Guaranty is a continuing guaranty of payment and not of collectibility, and is not conditional or contingent upon the genuineness, validity, regularity or enforceability of the Agreement or the pursuit by Beneficiary of any remedies which it now has or may hereafter have under the Agreement;

(b) Beneficiary may enforce this Guaranty upon the occurrence of a default by Principal under the Agreement notwithstanding the existence of a dispute between Beneficiary and Principal with respect to the existence of the default;

(c) The obligations of Guarantor under this Guaranty are independent of the obligations of Principal under the Agreement and a separate action or actions may be brought and prosecuted against Guarantor whether or not any action is brought against Principal or any other guarantors and whether or not Principal is joined in any such action or actions;

(d) Beneficiary may, at its election, foreclose on any security held by Beneficiary, whether or not the means of foreclosure is commercially reasonable, or exercise any other right or remedy available to Beneficiary without affecting or impairing in any way the liability of Guarantor under this Guaranty, except to the extent the amount(s) owed to Beneficiary by Principal have been paid; and

(e) Guarantor shall continue to be liable under this Guaranty and the provisions hereof shall remain in full force and effect notwithstanding:

(i) Any modification, amendment, supplement, extension, agreement or stipulation between Principal and Beneficiary or their respective successors and assigns, with respect to the Agreement or the obligations encompassed thereby;

(ii) Beneficiary's waiver of or failure to enforce any of the terms, covenants or conditions contained in the Agreement;

(iii) Any release of Principal or any other guarantor from any liability with respect to the Obligations or any portion thereof;

(iv) Any release, compromise or subordination of any real or personal property then held by Beneficiary as security for the performance of the Obligations or any portion thereof, or any substitution with respect thereto;

(v) Without in any way limiting the generality of the foregoing, if Beneficiary is awarded a judgment in any suit brought to enforce a portion of the Obligations, such judgment is not deemed to release Guarantor from its covenant to pay that portion of the Obligations which is not the subject of such suit;

(vi) Beneficiary's acceptance and/or enforcement of, or failure to enforce, any other guaranties or any portion of this Guaranty;

(vii) Beneficiary's exercise of any other rights available to it under the Agreement;

(viii) Beneficiary's consent to the change, reorganization or termination of the corporate structure or existence of the Principal and to any corresponding restructuring of the Obligations;

(ix) Any failure to perfect or continue perfection of a security interest in any collateral that secures the Obligations;

(x) [Intentionally omitted;] and

(xi) Any other act or thing or omission, or delay to do any other act or thing that might in any manner or to any extent vary the risk of Guarantor as an obligor with respect to the Obligations.

(f) Guarantor agrees that upon a demand for payment under this Guaranty in accordance with Section 1 hereof, Guarantor shall pay such Obligations as are included in such demand notwithstanding any defenses, setoffs or counterclaims that Principal may allege or assert against Beneficiary with respect to the Obligations, including, without limitation, statute of frauds, statute of limitations and accord and satisfaction; provided that Guarantor reserves the right to assert any defenses, setoffs or counterclaims that Principal may allege or assert against Beneficiary (except for such defenses, setoffs or counterclaims as are expressly waived under other provisions of this Guaranty) in a subsequent action for recoupment, restitution or reimbursement.

4. Termination; Reinstatement.

(a) The term of this Guaranty is continuous until the date on which the Obligations have been performed or paid in full.

(b) This Guaranty shall be reinstated if at any time following the termination of this Guaranty, any payment by Guarantor under this Guaranty or pursuant hereto is rescinded or must otherwise be returned by the Beneficiary or other person upon the insolvency, bankruptcy, reorganization, dissolution or liquidation of Principal, Guarantor or otherwise, and is so rescinded or returned to the party or parties making such payment, all as though such payment had not been made.

If all or any portion of the Obligations are paid by Principal, the obligations of Guarantor hereunder shall continue and remain in full force and effect or be reinstated, as the case may be, in the event that all or any part of such payment(s) are rescinded or recovered directly or indirectly from Beneficiary as a preference, fraudulent transfer or otherwise, and any such payments which are so rescinded or recovered shall constitute Obligations for all purposes under this Guaranty.

5. Bankruptcy; Post-Petition Interest.

(a) So long as any Obligations remain outstanding, Guarantor may not, without the prior written consent of Beneficiary, commence or join with any other person in

commencing any bankruptcy, reorganization or insolvency proceedings of or against Principal.

The obligations of Guarantor under this Guaranty may not be reduced, limited, impaired, discharged, deferred, suspended or terminated by any proceeding, voluntary or involuntary, involving the bankruptcy, insolvency, receivership, reorganization, liquidation or arrangement of the Principal or by any defense which Principal may have by reason of the order, decree or decision of any court or administrative body resulting from any such proceeding.

(b) Any interest on any portion of the Obligations which accrues after the commencement of any such proceeding (or, if interest on any portion of the Obligations ceases to accrue by operation of law by reason of the commencement of said proceeding, such interest as would have accrued on such portion of the Obligations if said proceedings had not been commenced) shall be included in the Obligations.

Guarantor will permit any trustee in bankruptcy, receiver, debtor in possession, assignee for the benefit of creditors or similar person to pay Beneficiary, or allow the claim of Beneficiary in respect of, any such interest accruing after the date on which such proceeding is commenced.

6. Subrogation. Guarantor shall be subrogated to all rights of the Beneficiary against Principal with respect to any amounts paid by the Guarantor pursuant to the Guaranty, provided that Guarantor postpones the exercise of such rights until all Obligations have been irrevocably paid in full to the Beneficiary.

If any amount is paid to Guarantor on account of such subrogation, reimbursement, contribution or indemnity rights at any time when all the Obligations guaranteed hereunder have not been indefeasibly paid in full, Guarantor shall hold such amount in trust for the benefit of Beneficiary (provided that no fiduciary duty shall be deemed to arise in connection herewith) and shall promptly pay such amount to Beneficiary.

7. [Intentionally omitted.]

8. Waivers of Guarantor.

(a) [Intentionally omitted.]

(b) Guarantor waives any right to require Beneficiary to proceed against or exhaust any security held from Principal or any other party acting under a separate agreement.

(c) Guarantor waives all of the rights and defenses described in subdivision (a) of Section 2856 of the California Civil Code, including any rights and defenses that are or may become available to the Guarantor by reason of Sections 2787 to 2855 thereof, inclusive. Without limiting the generality of the foregoing waiver:

(i) The guarantor waives all rights and defenses that the guarantor may have because the debtor's debt is secured by real property.

This means, among other things:

a. The creditor may collect from the guarantor without first foreclosing on any real or personal property collateral pledged by the debtor.

b. If the creditor forecloses on any real property collateral pledged by the debtor:

(1) The amount of the debt may be reduced only by the price for which that collateral is sold at the foreclosure sale, even if the collateral is worth more than the sale price.

(2) The creditor may collect from the guarantor even if the creditor, by foreclosing on the real property collateral, has destroyed any right the guarantor may have to collect from the debtor.

This is an unconditional and irrevocable waiver of any rights and defenses the guarantor may have because the debtor's debt is secured by real property. These rights and defenses include, but are not limited to, any rights or defenses based upon Section 580a, 580b, 580d, or 726 of the California Code of Civil Procedure.

(ii) The guarantor waives all rights and defenses arising out of an election of remedies by the creditor, even though that election of remedies, such as a nonjudicial foreclosure with respect to security for a guaranteed obligation, has destroyed the guarantor's rights of subrogation and reimbursement against the principal by the operation of Section 580d of the Code of Civil Procedure or otherwise.

(d) Guarantor assumes all responsibility for keeping itself informed of Principal's financial condition and all other factors affecting the risks and liability assumed by Guarantor hereunder, and Beneficiary shall have no duty to advise Guarantor of information known to it regarding such risks.

(e) Guarantor waives any defense arising by reason of the incapacity, lack of authority or any disability of the Principal, failure of consideration or any defense based on or arising out of the lack of validity or enforceability of the Obligations;

(f) Guarantor waives any defense based upon Beneficiary's errors or omissions in the administration of the Obligations;

(g) Guarantor waives its right to raise any defenses based upon promptness, diligence, and any requirement that Beneficiary protect, secure, perfect or insure any security interest or lien or any property subject thereto;

(h) Guarantor waives its right to raise any principles of law, statutory or otherwise, that limit the liability of or exonerate guarantors, provide any legal or equitable discharge of Guarantor's obligations hereunder, or which may conflict with the terms of this Guaranty;

(i) Other than demand for payment, the Guarantor expressly waives all notices between the Beneficiary and the Principal including without limitation all notices with respect to the Agreement and this Guaranty, notice of acceptance of this Guaranty, any notice of credits extended and sales made by the Beneficiary to Principal, any information regarding Principal's financial condition, and all other notices whatsoever; and

(j) Guarantor waives filing of claims with a court in the event of the insolvency or bankruptcy of the Principal.

9. No Waiver of Rights by Beneficiary. No right or power of Beneficiary under this Guaranty shall be deemed to have been waived by any act or conduct on the part of Beneficiary, or by any neglect to exercise a right or power, or by any delay in doing so, and every right or power of Beneficiary hereunder shall continue in full force and effect until specifically waived or released in a written document executed by Beneficiary.

10. Assignment, Successors and Assigns. This Guaranty shall be binding upon Guarantor, its successors and assigns, and shall inure to the benefit of, and be enforceable by, the Beneficiary and its successors, assigns and creditors. The Beneficiary shall have the right to assign this Guaranty to any person or entity without the prior consent of the Guarantor; *provided, however*, that no such assignment shall be binding upon the Guarantor until it receives written notice of such assignment from the Beneficiary.

The Guarantor shall have no right to assign this Guaranty or its obligations hereunder without the prior written consent of the Beneficiary.

11. Representations of Guarantor. Guarantor represents and warrants that:

(a) It is a corporation duly organized, validly existing and in good standing in all necessary jurisdictions and has full power and authority to execute, deliver and perform this Guaranty;

(b) It has taken all necessary actions to execute, deliver and perform this Guaranty;

(c) This Guaranty constitutes the legal, valid and binding obligation of Guarantor, enforceable in accordance with its terms, subject to bankruptcy, insolvency, reorganization, moratorium and other similar laws effecting creditors' rights generally and to general equitable principles;

(d) Execution, delivery and performance by Guarantor of this Guaranty does not conflict with, violate or create a default under any of its governing documents, any agreement or instruments to which it is a party or to which any of its assets is subject or any applicable law, rule, regulation, order or judgment of any Governmental Authority; and

(e) All consents, approvals and authorizations of governmental authorities required in connection with Guarantor's execution, delivery and performance of this Guaranty have been duly and validly obtained and remain in full force and effect.

12. Financial Statements. If requested by Beneficiary, Guarantor shall deliver the following financial statements, which in all cases shall be for the most recent accounting period and prepared in accordance with generally accepted accounting principles:

(a) Within one hundred-twenty (120) days following the end of each fiscal year that any Obligations are outstanding, a copy of its annual report containing its audited consolidated financial statements (income statement, balance sheet, statement of cash flows and statement of retained earnings and all accompanying notes) for such fiscal year, setting forth in each case in comparative form the figures for the previous year; and

(b) Within sixty (60) days after the end of each of its first three fiscal quarters of each fiscal year that any Obligations are outstanding, a copy of its quarterly report containing its consolidated financial statements (income statement, balance sheet, statement of cash flows and statement of retained earnings and all accompanying notes) for such fiscal quarter and the portion of the fiscal year through the end of such quarter, setting forth in each case in comparative form the figures for the previous year and: (i) certified in accordance with all applicable laws and regulations, including without limitation all applicable Securities and Exchange Commission ("SEC") rules and regulations, if Guarantor is an SEC reporting company; or (ii) certified by a Responsible Officer as being fairly stated in all material respects (subject to normal year end audit adjustments) if Guarantor is not an SEC reporting company.

(c) For the purposes of the requirement in this Paragraph 12, if Guarantor's financial statements are publicly available electronically on the website of Guarantor or the SEC, then Guarantor shall be deemed to have met this requirement.

13. Attorneys' Fees. In addition to the amounts for which payment is guaranteed hereunder, Guarantor agrees to pay reasonable attorneys' fees and all other costs and expenses incurred by Beneficiary in enforcing this Guaranty or in any action or proceeding arising out of or relating to this Guaranty. Any costs for which Guarantor becomes liable pursuant to this Paragraph 13 is not subject to, and does not count toward, the guaranty limit set forth in Paragraph 2 above.

14. Governing Law. This Guaranty is made under and shall be governed in all respects by the laws of the State of California, without regard to conflict of law principles. If any provision of this Guaranty is held invalid under the laws of California, this Guaranty shall be construed as though the invalid provision has been deleted, and the rights and obligations of the parties shall be construed accordingly.

15. Construction. All parties to this Guaranty are represented by legal counsel. The terms of this Guaranty and the language used in this Guaranty shall be deemed to be the terms and language chosen by the parties hereto to express their mutual intent. This Guaranty shall be construed without regard to any presumption or rule requiring construction against the party causing such instrument or any portion thereof to be drafted, or in favor of the party receiving a particular benefit under this Guaranty. No rule of strict construction will be applied against any party.

16. Amendment; Severability. Neither this Guaranty nor any of the terms hereof may be terminated, amended, supplemented or modified, except by an instrument in writing executed by an authorized representative of each of Guarantor and Beneficiary.

    If any provision in or obligation under this Guaranty is invalid, illegal or unenforceable in any jurisdiction, the validity, legality and enforceability of the remaining provisions or obligations, or of such provision or obligation in any other jurisdiction, is not in any way be affected or impaired thereby.

17. Third Party Rights. This Guaranty may not be construed to create any rights in any parties other than Guarantor and Beneficiary and their respective successors and permitted assigns.

18. Notices. Any demand for payment, notice, request, instruction, correspondence or other document to be given hereunder by any party to another shall be made by facsimile to the person and at the address for notices specified below.

Beneficiary:	*[Buyer]* *[Street]* *[City, State Zip]* Attn: Phone: Facsimile:
with a copy to:	*[Name]* *[Street]* *[City, State Zip]* Attn: Phone: Facsimile:
Guarantor:	*[Guarantor]*

[Street]
[City, State Zip]
Attn:
Phone:
Facsimile:

Principal: *[Principal]*
[Street]
[City, State Zip]
Attn:
Phone:
Facsimile:

Such notice shall be effective upon confirmation of the actual receipt if received during the recipient's normal business hours, or at the beginning of the recipient's next Business Day after receipt if receipt is outside of the recipient's normal business hours. Either party may periodically change any address to which notice is to be given it by providing notice of such change as provided herein.

[signature page follows]

IN WITNESS WHEREOF, Guarantor has executed this Guaranty as of _____, ____.

_____*[legal name]*__

By: _____
Name: _____
Title: _____]

*** *End of Exhibit K* ***

EXHIBIT L

Form of Letter of Credit

IRREVOCABLE NONTRANSFERABLE STANDBY
LETTER OF CREDIT

Reference Number:

Transaction Date:

BENEFICIARY:

_____
_____
_____
_____

Ladies and Gentlemen:

_____ (the "Bank") establishes this Irrevocable Nontransferable Standby Letter of Credit ("Letter of Credit") in favor of _____, a California corporation (the "Beneficiary"), for the account of _____, a _____ corporation, also known as ID# ___ (the "Applicant"), for the amount of XXX AND XX/100 Dollars ($_____) (the "Available Amount"), effective immediately and expiring at 5:00 p.m., California time, on _____ (the "Expiration Date").

This Letter of Credit shall be of no further force or effect upon the close of business on _____ or, if such day is not a Business Day (as hereinafter defined), on the next preceding Business Day.

For the purposes hereof, "Business Day" shall mean any day on which commercial banks are not authorized or required to close in California.

Subject to the terms and conditions herein, funds under this Letter of Credit are available to Beneficiary by presentation in compliance on or before 5:00 p.m. California time, on or before the Expiration Date of the following:

1. The original of this Letter of Credit and all amendments (or photocopy of the original for partial drawings); and

2. The Drawing Certificate issued in the form of Attachment A attached hereto and which forms an integral part hereof, duly completed and purportedly bearing the signature of an authorized representative of the Beneficiary.

Notwithstanding the foregoing, any drawing hereunder may be requested by transmitting the requisite documents as described above to the Bank by facsimile at _____ or such other number as specified from time to time by the Bank.

The facsimile transmittal shall be deemed delivered when received. Drawings made by facsimile transmittal are deemed to be the operative instrument without the need of originally signed documents.

Partial drawing of funds shall be permitted under this Letter of Credit, and this Letter of Credit shall remain in full force and effect with respect to any continuing balance;

provided that, the Available Amount shall be reduced by the amount of each such drawing.

This Letter of Credit is not transferable or assignable. Any purported transfer or assignment shall be void and of no force or effect.

Banking charges shall be the sole responsibility of the Applicant.

This Letter of Credit sets forth in full our obligations and such obligations may not in any way be modified, amended, amplified or limited by reference to any documents, instruments or agreements referred to herein, except only the attachment referred to herein; and any such reference may not be deemed to incorporate by reference any document, instrument or agreement except for such attachment.

The Bank engages with the Beneficiary that Beneficiary's drafts drawn under and in compliance with the terms of this Letter of Credit will be duly honored if presented to the Bank on or before the Expiration Date.

Except so far as otherwise stated, this Letter of Credit is subject to the International Standby Practices ISP98 (also known as ICC Publication No. 590), or revision currently in effect (the "ISP"). As to matters not covered by the ISP, the laws of the State of California, without regard to the principles of conflicts of laws thereunder, shall govern all matters with respect to this Letter of Credit.

AUTHORIZED SIGNATURE for Issuer

Name:_____

Title:_____

ATTACHMENT A
Drawing Certificate

TO *[ISSUING BANK NAME]*

IRREVOCABLE NON-TRANSFERABLE STANDBY LETTER OF CREDIT

No. _____

DRAWING CERTIFICATE

Bank

Bank Address

Subject: Irrevocable Non-transferable Standby Letter of Credit

Reference Number:

The undersigned _____, an authorized representative of _____ (the "Beneficiary"), certifies to *[Issuing Bank Name]* (the "Bank"), and _____ (the "Applicant"), with reference to Irrevocable Nontransferable Standby Letter of Credit No. {_____}, dated _____, (the "Letter of Credit"), issued by the Bank in favor of the Beneficiary, as follows as of the date hereof:

1. The Beneficiary is entitled to draw under the Letter of Credit an amount equal to $_____, for the following reason(s) [check applicable provision]:

   [ ]A. An Event of Default, as defined in that certain Power Purchase and Sale Agreement between Applicant and Beneficiary, dated as of *[Date of Execution]* (the "Agreement"), with respect to the Applicant has occurred and is continuing.

   [ ]B. An Early Termination Date (as defined in the Agreement) has occurred or been designated as a result of an Event of Default (as defined in the Agreement) with respect to the Applicant for which there exist any unsatisfied payment obligations.

   [ ]C. The Letter of Credit will expire in fewer than 30 days from the date hereof, and Applicant has not provided Beneficiary alternative Performance Assurance (as defined in the Agreement) acceptable to Beneficiary.

   [ ]D. The Bank has heretofore provided written notice to the Beneficiary of the Bank's intent not to renew the Letter of Credit following the present Expiration Date thereof ("Notice of Non-renewal"), and Applicant has failed to provide the

Beneficiary with a replacement letter of credit satisfactory to Beneficiary in its sole discretion within 30 days following the date of the Notice of Non-renewal.

[ ]E. The Beneficiary is entitled to retain the entire Development Security (i) as a result of Applicant's failure to commence the Term by the Term Start Date, or (ii) the Agreement has terminated due to an Event of Default by Applicant before the Term Start Date.

[ ]F. The Beneficiary is entitled to retain a portion of the Development Security equal to the product of $20 per kW of As-Available Contract Capacity which Seller failed to demonstrate.

2. Based upon the foregoing, the Beneficiary makes demand under the Letter of Credit for payment of U.S. DOLLARS AND ____/100ths (U.S.$_____), which amount does not exceed (i) the amount set forth in paragraph 1 above, and (ii) the Available Amount under the Letter of Credit as of the date hereof.

3. Funds paid pursuant to the provisions of the Letter of Credit shall be wire transferred to the Beneficiary in accordance with the following instructions:

Unless otherwise provided herein, capitalized terms which are used and not defined herein shall have the meaning given each such term in the Letter of Credit.

IN WITNESS WHEREOF, this Certificate has been duly executed and delivered on behalf of the Beneficiary by its authorized representative as of this ____ day of _____, _____.

Beneficiary: [BENEFICIARY NAME]

By: _____
Name:_____
Title:_____

*** *End of Exhibit L* ***

EXHIBIT M

Seller's Milestone Schedule

No.	*Target Date*	*Milestones*
		[Not Applicable]

**** End of Exhibit M ****

EXHIBIT N

Outage Schedule Submittal Requirements

1. General Requirements.

The Parties shall abide by the Outage Schedule Submittal Requirements described below and shall agree upon reasonable changes to these requirements and procedures from time to time, as necessary to:

(a) Comply with the CAISO Tariff;

(b) Accommodate changes to their respective generation technology and organizational structure; and

(c) Address changes in the operating and Scheduling procedures of Seller, Buyer and the CAISO, including automated forecast and outage submissions.

2. Seller's Availability Forecasting Submittal Requirements for all Generating Facilities.

Seller shall submit maintenance and Planned Outage schedules in accordance with the following schedule:

(a) No later than January 1st, April 1st, July 1st and October 1st of each Term Year, and at least 60 days before Parallel Operation, Seller shall submit to Buyer its schedule of proposed Planned Outages ("Outage Schedule") for the subsequent twenty four-month period using a Buyer-provided web-based system or an e-mail address designated by Buyer ("Web Client").

(b) Seller shall provide the following information for each proposed Planned Outage:

(i) Start date and time;

(ii) End date and time; and

(iii) Capacity online, in MW, during the Planned Outage.

(c) Within 20 Business Days after Buyer's receipt of an Outage Schedule, Buyer shall notify Seller in writing of any request for changes to the Outage Schedule, and Seller shall, consistent with Prudent Electrical Practices, accommodate Buyer's requests regarding the timing of any Planned Outage.

(d) Seller shall cooperate with Buyer to arrange and coordinate all Outage Schedules with the CAISO.

(e) In the event a condition occurs at the Generating Facility which causes Seller to revise its Planned Outages, Seller shall provide Notice to Buyer, using the Web Client, of such change (including, an estimate of the length of such Planned Outage) as required in the CAISO Tariff after the condition causing the change becomes known to Seller.

(f) Seller shall promptly prepare and provide to Buyer upon request, using the Web Client, all reports of actual or forecasted outages that Buyer may reasonably require for the purpose of enabling Buyer to comply with Section 761.3 of the California Public Utilities Code or any Applicable Law mandating the reporting by investor owned utilities of expected or experienced outages by electric energy generating facilities under contract to supply electric energy.

**** End of Exhibit N ***

Yorke
ENGINEERING, LLC
www.YorkeEngr.com

August 25, 2014

Mr. William Knox
California Air Resources Board
Climate Change Program Evaluation Branch, 6th Floor
1001 "I" Street
Sacramento, CA 95814

Subject: Application for Limited Exemption of Emissions from Qualified Thermal Output for Cogeneration Facilities for Houweling Nurseries Oxnard, Inc. (Facility ARB ID 104364)

Dear Mr. Knox:

On behalf of Houweling Nurseries Oxnard, Inc (Houweling), we are submitting an application for the Cap-and-Trade Limited Exemption of Emissions from Qualified Thermal Output for Cogeneration Facilities (Section 95852(j)). This application is submitted for Houweling's facility in Camarillo, CA (Facility ARB ID 104364). As we understand, a facility that qualifies for the limited exemption under Section 95852(j) will not be a covered entity during the first, second, and third compliance periods, as long as the facility meets the requirements for the exemption.

Houweling started the operation of their cogeneration units in 2012, and was only operating their cogeneration units for partial year. 2013 is the first year that Houweling operated their cogeneration units for a full year and exceeded the Cap-and-Trade applicability threshold of 25,000 $MTCO_2e$. As shown in the attached completed application form, the Houweling facility meets the requirements for the limited exemption set forth in Section 95852(j) of the Cap-and-Trade Regulation for 2012 and 2013. Therefore, we request for the limited exemption, as allowed by the Cap-and-Trade Regulation, be granted to Houweling facility in Camarillo.

Should you have any questions or concerns, please contact me at (559) 908-6979.

Sincerely,

Carla Jo

Carla Prasetyo Jo, PE
Yorke Engineering, LLC
(559) 908-6979

cc: Joseph Steirer, Yorke Engineering, LLC

Enclosures:

1. One Application form for Limited Exemption of Emissions from Qualified Thermal Output for Cogeneration Facilities

California Air Resources Board

Application for Limited Exemption of Emissions from Qualified Thermal Output for Cogeneration Facilities

California Air Resources Board
Attn: William Knox
CCPEB, 6th Floor
1001 "I" Street
Sacramento, CA 95814

1) Legal Entity Name	2) Mailing Address	3) ARB ID #	4) CITSS Account ID # (CA + 4 digits)
Houweling Nurseries Oxnard, Inc	645 W. Laguna Road, Camarillo, CA 93012	104364	CA1740

Qualified Thermal Output by Use

	Thermal Energy Used on Site or Sold?	On-Site Use Category	5) NAICS Code(s) of Use, if Applicable (Optional)	6) Thermal Output Supports or is Part of Cogeneration or Electricity System?	7) Qualified Thermal Output (MMBtu)						8) Discussion of any Differences from Previous Reporting
					2008	2009	2010	2011	2012	2013	
1	Used on Site	Industrial Processes or Operations	111419	Yes	-	-	-	-	29,418	167,628	Not Applicable
2	Used on Site	Heating Operations									
3	Used on Site	Cooling Operations									
4	Sold										

9) Cogeneration Unit Burns some Fuel without Covered Emissions?	No						
10) Cogeneration Fuel that Produces Covered Emissions (MMBtu)							
11)Total Cogeneration Fuel (MMBtu)							
Covered Fuel Ratio	100%	100%	100%	100%	100%	100%	
Annual QTO (MMBtu)	-	-	-	-	29,418	167,628	
GHG Emissions of QTO	-	-	-	-	1,837	10,467	
12) Total Covered Emissions (metric tons CO_2e)					24,411	29,355	
Total Remaining Covered Emissions	-	-	-	-	22,574	18,888	
Emissions Under Threshold All Years?	Yes						

13) I certify under penalty of perjury of the laws of the State of California that I am duly authorized by the legal entity named in box 1 above to sign this attestation on behalf of said legal entity, and that the information submitted herein is true, accurate, and complete.

Richard Vanderlaan
Print Name

Signature

8-25-2014
Date

GENERATOR INTERCONNECTION AGREEMENT (GIA) FOR A GENERATING FACILITY INTERCONNECTING UNDER THE INDEPENDENT STUDY PROCESS

BETWEEN

HOUWELING NURSERIES OXNARD, INC.

AND

SOUTHERN CALIFORNIA EDISON COMPANY

PROJECT: HOUWELING NURSERIES OXNARD (SCE WDT661ISP)

TABLE OF CONTENTS

Page No.

Recitals 7
Article 1. Definitions 7
Article 2. Effective Date, Term, and Termination 17
2.1 Effective Date. 17
2.2 Term of Agreement.. 17
2.3 Termination Procedures. 17
2.3.1 Written Notice.. 17
2.3.2 Default 17
2.3.3 Suspension of Work.. 17
2.4 Termination Costs. 18
2.5 Disconnection. 18
2.6 Survival.. 19
Article 3. Regulatory Filings 19
3.1 Filing.. 19
Article 4. Scope of Service 19
4.1 Interconnection Service.. 19
4.1.1 Distribution Service Implications 19
4.1.2 Transmission Service Implications. 19
4.2 Provision of Service.. 20
4.3 Performance Standards. 20
4.4 No Distribution Service or Transmission Service.. 20
4.5 Interconnection Customer Provided Services.. 20
Article 5. Interconnection Facilities Engineering, Procurement, and Construction 20
5.1 Options 20
5.1.1 Standard Option. 20
5.1.2 Alternate Option.. 21
5.1.3 Option to Build 21
5.1.4 Negotiated Option 21
5.2 General Conditions Applicable to Option to Build. 22
5.3 Liquidated Damages. 23
5.4 Power System Stabilizers.. 24
5.5 Equipment Procurement. 24
5.6 Construction Commencement 24
5.7 Work Progress. 25
5.8 Information Exchange. 25
5.9 Limited Operation.. 25
5.10 Interconnection Customer's Interconnection Facilities ('ICIF'). 25
5.10.1 Interconnection Customer's Interconnection Facility Specifications. Interconntial Synchronization Date. 26
5.10.2 Distribution Provider's Review. 26
5.10.3 ICIF Construction 26
5.10.4 Interconnection Customer to Meet Requirements of the Distribution Provider's Interconnection Handbook 26

5.11 Distribution Provider's Interconnection Facilities Construction. 26
5.12 Access Rights. 27
5.13 Lands of Other Property Owners.. 27
5.14 Permits..... 27
5.15 Early Construction of Base Case Facilities. 28
5.16 Suspension..... 28
5.17 Taxes. 28
5.17.1 Interconnection Customer Payments Not Taxable. 29
5.17.2 Representations and Covenants..... 29
5.17.3..Indemnification for the Cost Consequences of Current Tax Liability Imposed Upon the Distribution Provider. 29
5.17.4 Tax Gross-Up Amount 30
5.17.5 Private Letter Ruling or Change or Clarification of Law..... 31
5.17.6 Subsequent Taxable Events.. 31
5.17.7 Contests. 31
5.17.8 Refund. 32
5.17.9 Taxes Other Than Income Taxes..... 33
5.17.10 Distribution Owners Who Are Not Distribution Providers.. 33
5.18 Tax Status..... 34
5.19 Modification. 34
5.19.1 General. 34
5.19.2 Standards.. 34
5.19.3 Modification Costs. 34
Article 6. Testing and Inspection 35
6.1 Pre-Commercial Operation Date Testing and Modifications. 35
6.2 Post-Commercial Operation Date Testing and Modifications. 35
6.3 Right to Observe Testing.. 35
6.4 Right to Inspect..... 35
Article 7. Metering 35
7.1 General. 36
7.2 Check Meters.. 36
7.3 Distribution Provider Retail Metering. 36
Article 8. Communications 36
8.1 Interconnection Customer Obligations. 36
8.2 Remote Terminal Unit.. 37
8.3 No Annexation.. 37
Article 9. Operations 37
9.1 General. 37
9.2 Control Area Notification. 37
9.3 Distribution Provider Obligations.. 37
9.4 Interconnection Customer Obligations.. 38
9.5 Start-Up and Synchronization. 38
9.6 Reactive Power. 38
9.6.1 Power Factor Design Criteria..... 38
9.6.2 Voltage Schedules. 38
9.6.3 Payment for Reactive Power. 39

9.7 Outages and Interruptions. 39
9.7.1 Outages. 39
9.7.2 Interruption of Service. 40
9.7.3 Under-Frequency and Over Frequency Conditions. 41
9.7.4 System Protection and Other Control Requirements. 41
9.7.5 Requirements for Protection. 42
9.7.6 Power Quality. 43
9.8 Switching and Tagging Rules.. 43
9.9 Use of Interconnection Facilities by Third Parties 43
9.9.1 Purpose of Interconnection Facilities. 43
9.9.2 Third Party Users. 43
9.10 Disturbance Analysis Data Exchange 44
Article 10. Maintenance 44
10.1 Distribution Provider Obligations.. 44
10.2 Interconnection Customer Obligations. 44
10.3 Coordination. 44
10.4 Secondary Systems. 44
10.5 Operating and Maintenance Expenses. 44
Article 11. Performance Obligation 44
11.1 Interconnection Customer Interconnection Facilities. 44
11.2 Distribution Provider's Interconnection Facilities.. 45
11.3 Network Upgrades and Distribution Upgrades 45
11.4 Transmission Credits. 45
11.4.1 Repayment of Amounts Advanced for Network Upgrades 45
11.4.2 Special Provisions for Affected Systems.. 46
11.5 Provision of Interconnection Financial Security.. 46
Article 12. Invoice 46
12.1 General. 46
12.2 Final Invoice 46
12.3 Payment. 47
12.4 Disputes. 47
Article 13. Emergencies 47
13.1 Definition. 47
13.2 Obligations. 47
13.3 Notice. 47
13.4 Immediate Action.. 48
13.5 Distribution Provider Authority. 48
13.5.1 General.. 48
13.5.2 Reduction and Disconnection 49
13.6 Interconnection Customer Authority.. 49
13.7 Limited Liability 49
Article 14. Regulatory Requirements and Governing Law 49
14.1 Regulatory Requirements 49
14.2 Governing Law. 50
Article 15. Notices. 50
15.1 General 50

15.2 Billings and Payments.. 50
15.3 Alternative Forms of Notice.. 50
15.4 Operations and Maintenance Notice.. 50
Article 16. Uncontrollable Force 50
16.1 Uncontrollable Force 50
Article 17. Default 51
17.1 Default 51
17.1.1 General. 51
17.1.2 Right to Terminate. 51
Article 18. Indemnity, Consequential Damages and Insurance 51
18.1 Indemnity. 51
18.1.1 Indemnified Person. 52
18.1.2 Indemnifying Party.. 52
18.1.3 Indemnity Procedures. 52
18.2 Consequential Damages. 53
18.3 Insurance. 53
Article 19. Assignment 55
19.1 Assignment.. 55
Article 20. Severability 55
20.1 Severability. . 55
Article 21. Comparability 55
21.1 Comparability. 55
Article 22. Confidentiality 56
22.1 Confidentiality. . 56
22.1.1 Term.. 56
22.1.2 Scope. 56
22.1.3 Release of Confidential Information.. 56
22.1.4 Rights. 57
22.1.5 No Warranties. 57
22.1.6 Standard of Care. 57
22.1.7 Order of Disclosure. 57
22.1.8 Termination of Agreement. 57
22.1.9 Remedies. 58
22.1.10 Disclosure to FERC, its Staff, or a State.. 58
Article 23. Environmental Releases 59
Article 24. Information Requirements 59
24.1 Information Acquisition 59
24.2 Information Submission by Distribution Provider. 59
24.3 Updated Information Submission by Interconnection Customer. 59
24.4 Information Supplementation.. 60
Article 25. Information Access and Audit Rights 60
25.1 Information Access. 61
25.2 Reporting of Non-Uncontrollable Force Events. 61
25.3 Audit Rights. . 61
25.4 Audit Rights Periods. 61
25.4.1 Audit Rights Period for Construction-Related Accounts and Records.. 61

25.4.2 Audit Rights Period for All Other Accounts and Records 61
25.5 Audit Results 62
Article 26. Subcontractors 62
26.1 General. 62
26.2 Responsibility of Principal 62
26.3 No Limitation by Insurance.. 62
Article 27. Disputes 62
27.1 Submission.. 62
27.2 External Arbitration Procedures. 63
27.3 Arbitration Decisions.. 63
27.4 Costs 63
Article 28. Representations, Warranties, and Covenants 63
28.1 General. 63
28.1.1 Good Standing.. 63
28.1.2 Authority. 64
28.1.3 No Conflict.. 64
28.1.4 Consent and Approval. 64
Article 29. [Reserved] 64
Article 30. Miscellaneous 64
30.1 Binding Effect.. 64
30.2 Conflicts 64
30.3 Rules of Interpretation 64
30.4 Entire Agreement. 65
30.5 No Third Party Beneficiaries. 65
30.6 Waiver. 65
30.7 Headings.. 65
30.8 Multiple Counterparts. 65
30.9 Amendment.. 65
30.10 Modification by the Parties.. 66
30.11 Reservation of Rights.. 66
30.12 No Partnership 66

Appendix A – Interconnection Facilities, Network Upgrades and Distribution Upgrades

Appendix B – Milestones

Appendix C – Interconnection Details

Appendix D – Security Arrangements Details

Appendix E – Commercial Operation Date

Appendix F – Addresses for Delivery of Notices and Billings

Appendix G – Interconnection Customer's Proportional Share of Costs of Network Upgrades for Applicable Project Group

Appendix H – Interconnection Requirements For A Wind Generating Plant

GENERATOR INTERCONNECTION AGREEMENT

THIS GENERATOR INTERCONNECTION AGREEMENT ("GIA" or "Agreement") is made and entered into this ____ day of _____ 2012, by and between Houweling Nurseries Oxnard, Inc., a corporation organized and existing under the laws of the State/Commonwealth of California ("Interconnection Customer" with a Generating Facility), and Southern California Edison Company, a corporation organized and existing under the laws of the State of California ("Distribution Provider and/or Distribution Owner"). Interconnection Customer and Distribution Provider each may be referred to as a "Party" or collectively as the "Parties."

Recitals

WHEREAS, Distribution Provider operates the Distribution System; and

WHEREAS, Interconnection Customer intends to own, lease and/or control and operate the Generating Facility identified in Appendix C to this Agreement; and,

WHEREAS, Interconnection Customer and Distribution Provider have agreed to enter into this Agreement for the purpose of interconnecting the Generating Facility with the Distribution System;

NOW, THEREFORE, in consideration of and subject to the mutual covenants contained herein, it is agreed:

When used in this Generator Interconnection Agreement, terms with initial capitalization that are not defined in Article 1 shall have the meanings specified in the Article in which they are used or the Tariff.

Article 1. Definitions

Adverse System Impact shall mean the negative effects due to technical or operational limits on conductors or equipment being exceeded that may compromise the safety and reliability of the electric system.

Affected System shall mean an electric system other than the Distribution Provider's Distribution System that may be affected by the proposed interconnection.

Affected System Operator shall mean the entity that operates an Affected System.

Affiliate shall mean, with respect to a corporation, partnership or other entity, each such other corporation, partnership or other entity that directly or indirectly, through one or more intermediaries, controls, is controlled by, or is under common control with, such corporation, partnership or other entity.

Ancillary Services shall mean those services that are necessary to support the transmission of capacity and energy from resources to loads while maintaining reliable operation of the Distribution Provider's Distribution System in accordance with Good Utility Practice.

Applicable Laws and Regulations shall mean all duly promulgated applicable federal, state and local laws, regulations, rules, ordinances, codes, decrees, judgments, directives, or judicial or administrative orders, permits and other duly authorized actions of any Governmental Authority.

Applicable Reliability Council shall mean the reliability council applicable to the Distribution System to which the Generating Facility is directly interconnected.

Applicable Reliability Standards shall mean the requirements and guidelines of NERC, the Applicable Reliability Council, and the Control Area of the Distribution System to which the Generating Facility is directly interconnected, including the requirements pursuant to Section 215 of the Federal Power Act.

Base Case shall mean data including, but not limited to, base case power flow, short circuit, and stability data bases, underlying load, generation, and transmission facility assumptions, contingency lists, including relevant special protection systems, and transmission diagrams used to perform Phase I Interconnection and Phase II Interconnection Studies. The Base Case may include Critical Energy Infrastructure Information (as that term is defined by FERC). The Base Case shall include transmission facilities as approved by the Distribution Provider or ISO, as applicable, and Distribution Upgrades and Network Upgrades associated with generating facilities in (iv) below and generating facilities that (i) are directly interconnected to the Distribution System or ISO Grid; (ii) are interconnected to Affected Systems and may have an impact on the Interconnection Request; (iii) have a pending request to interconnect to the Distribution System or an Affected System; or (iv) are not interconnected to the Distribution System or ISO Grid, but are subject to a fully executed generator interconnection agreement (or its equivalent predecessor agreement) or for which an unexecuted generator interconnection agreement (or its equivalent predecessor agreement) has been requested to be filed with FERC.

Breach shall mean the failure of a Party to perform or observe any material term or condition of the GIA.

Breaching Party shall mean a Party that is in Breach of the GIA.

Business Day shall mean Monday through Friday, excluding Federal Holidays.

Calendar Day shall mean any day including Saturday, Sunday or a Federal Holiday.

Commercial Operation shall mean the status of a Generating Facility that has commenced generating electricity for sale, excluding electricity generated during Trial Operation.

Commercial Operation Date of an Electric Generating Unit shall mean the date on which an Electric Generating Unit at a Generating Facility commences Commercial Operation as agreed to by the Parties pursuant to Appendix E to the GIA.

Confidential Information shall mean any confidential, proprietary or trade secret information of a plan, specification, pattern, procedure, design, device, list, concept, policy or compilation relating to the present or planned business of a Party, which is designated as confidential by the Party supplying the information, whether conveyed orally, electronically, in writing, through inspection, or otherwise.

Construction Activities shall mean actions by the Distribution Provider that result in irrevocable financial commitments for the purchase of major electrical equipment or land for Distribution Provider's Interconnection Facilities, Distribution Upgrades, or Network Upgrades assigned to the Interconnection Customer that occur after receipt of all appropriate governmental approvals needed for the Distribution Provider's Interconnection Facilities, Distribution Upgrades, or Network Upgrades.

Control Area shall mean an electrical system or systems bounded by interconnection metering and telemetry, capable of controlling generation to maintain its interchange schedule with other Control Areas and contributing to frequency regulation of the interconnection. A Control Area must be certified by the Applicable Reliability Council.

Default shall mean the failure of a Breaching Party to cure its Breach in accordance with Article 17 of the GIA.

Delivery Network Upgrades shall mean the transmission facilities at or beyond the point where the Distribution Provider's Distribution System interconnects to the ISO Grid, other than Reliability Network Upgrades, identified in the Interconnection Studies to relieve constraints on the ISO Grid.

Dispute Resolution shall mean the procedure for resolution of a dispute between the Parties in which they will first attempt to resolve the dispute on an informal basis.

Distribution Owner shall mean an entity that owns, leases or otherwise possesses an interest in the portion of the Distribution System at the Point of Interconnection and may be a Party to the GIA to the extent necessary.

Distribution Provider shall mean the public utility (or its designated agent) that owns, controls, or operates transmission or distribution facilities used for the transmission of electricity in interstate commerce and provides transmission service under the Tariff. The term Distribution Provider should be read to include the Distribution Owner when the Distribution Owner is separate from the Distribution Provider.

Distribution Provider's Interconnection Facilities shall mean all facilities and equipment owned, controlled or operated by the Distribution Provider from the Point of Change

of Ownership to the Point of Interconnection as identified in Appendix A to the GIA, including any modifications, additions or upgrades to such facilities and equipment. Distribution Provider's Interconnection Facilities are sole use facilities and shall not include Distribution Upgrades, Stand Alone Network Upgrades or Network Upgrades.

Distribution Service shall mean the wholesale distribution service provided under the Tariff.

Distribution System shall mean those non-ISO transmission and distribution facilities owned, controlled and operated by the Distribution Provider that are used to provide Distribution Service under the Tariff, which facilities and equipment are used to transmit electricity to ultimate usage points such as homes and industries directly from nearby generators or from interchanges with higher voltage transmission networks which transport bulk power over longer distances. The voltage levels at which distribution systems operate differ among areas.

Distribution Upgrades shall mean the additions, modifications, and upgrades to the Distribution Provider's Distribution System at or beyond the Point of Interconnection to facilitate interconnection of the Generating Facility and render the transmission service necessary to effect Interconnection Customer's wholesale sale of electricity in interstate commerce. Distribution Upgrades do not include Interconnection Facilities.

Effective Date shall mean the date on which the GIA becomes effective upon execution by the Parties subject to acceptance by FERC, or if filed unexecuted, upon the date specified by FERC.

Electric Generating Unit shall mean an individual electric generator and its associated plant and apparatus whose electrical output is capable of being separately identified and metered.

Emergency Condition shall mean a condition or situation: (1) that in the judgment of the Party making the claim is imminently likely to endanger life or property; or (2) that, in the case of a Distribution Provider, is imminently likely (as determined in a non-discriminatory manner) to cause a material adverse effect on the security of, or damage to Distribution Provider's Distribution System, Distribution Provider's Interconnection Facilities or the electric systems of others to which the Distribution Provider's Distribution System is directly connected; or (3) that, in the case of Interconnection Customer, is imminently likely (as determined in a non-discriminatory manner) to cause a material adverse effect on the security of, or damage to, the Generating Facility or Interconnection Customer's Interconnection Facilities. System restoration and black start shall be considered Emergency Conditions; provided, that Interconnection Customer is not obligated by the GIA to possess black start capability.

Engineering & Procurement (E&P) Agreement shall mean an agreement that authorizes the Distribution Provider to begin engineering and procurement of long lead-time items necessary for the establishment of the interconnection in order to advance the implementation of the Interconnection Request.

Environmental Law shall mean Applicable Laws or Regulations relating to pollution or protection of the environment or natural resources.

Federal Power Act shall mean the Federal Power Act, as amended, 16 U.S.C. §§ 791a et seq.

FERC shall mean the Federal Energy Regulatory Commission (Commission) or its successor.

Full Capacity Deliverability Status shall mean the condition whereby a Generating Facility interconnected with the Distribution System, under coincident ISO Control Area peak demand and a variety of severely stressed system conditions, can deliver the Generating Facility's full output to the aggregate of load on the ISO Grid, consistent with the ISO's reliability criteria and procedures and the ISO's On-Peak Deliverability Assessment as set forth in Section 4.5.4.2.1 of the GIP.

Generating Facility shall mean Interconnection Customer's Electric Generating Unit(s) used for the production of electricity identified in the Interconnection Request, but shall not include the Interconnection Customer's Interconnection Facilities.

Generating Facility Capacity shall mean the net capacity of the Generating Facility and the aggregate net capacity of the Generating Facility where it includes multiple Electric Generating Units.

Generator Interconnection Agreement (GIA) shall mean the form of interconnection agreement applicable to an Interconnection Request pertaining to a Generating Facility processed pursuant to the Independent Study Process of the Generator Interconnection Procedures, a *pro forma* version of which is set forth in Appendix 6 to the GIP.

Generator Interconnection Procedures (GIP) shall mean the interconnection procedures applicable to an Interconnection Request pertaining to a Generating Facility set forth in Attachment I of the Distribution Provider's Tariff.

Good Utility Practice shall mean any of the practices, methods and acts engaged in or approved by a significant portion of the electric industry during the relevant time period, or any of the practices, methods and acts which, in the exercise of reasonable judgment in light of the facts known at the time the decision was made, could have been expected to accomplish the desired result at a reasonable cost consistent with good business practices, reliability, safety and expedition. Good Utility Practice is not intended to be limited to the optimum practice, method, or act to the exclusion of all others, but rather to be acceptable practices, methods, or acts generally accepted in the region.

Governmental Authority shall mean any federal, state, local or other governmental regulatory or administrative agency, court, commission, department, board, or other governmental subdivision, legislature, rulemaking board, tribunal, or other governmental authority having jurisdiction over the Parties, their respective facilities, or the respective services

they provide, and exercising or entitled to exercise any administrative, executive, police, or taxing authority or power; provided, however, that such term does not include Interconnection Customer, Distribution Provider, or any Affiliate thereof.

Hazardous Substances shall mean any chemicals, materials or substances defined as or included in the definition of "hazardous substances," "hazardous wastes," "hazardous materials," "hazardous constituents," "restricted hazardous materials," "extremely hazardous substances," "toxic substances," "radioactive substances," "contaminants," "pollutants," "toxic pollutants" or words of similar meaning and regulatory effect under any applicable Environmental Law, or any other chemical, material or substance, exposure to which is prohibited, limited or regulated by any applicable Environmental Law.

Independent Study Process shall mean the interconnection study process set forth in GIP Section 5.

Independent Study Process Study Agreement shall mean the agreement between the Distribution Customer and the Interconnection Customer for conducting the Interconnection Studies for a proposed Generating Facility under the Independent Study Process, a *pro forma* version of which is set forth in Appendix 4 of the GIP.

Initial Synchronization Date shall mean the date upon which the Generating Facility is initially synchronized and upon which Trial Operation begins.

In-Service Date shall mean the date upon which the Interconnection Customer reasonably expects it will be ready to begin use of the Distribution Provider's Interconnection Facilities to obtain back feed power.

Interconnection Customer shall mean any entity, including the Distribution Provider, Distribution Owner or any of the Affiliates or subsidiaries of either, that proposes to interconnect its Generating Facility with the Distribution Provider's Distribution System.

Interconnection Customer's Interconnection Facilities shall mean all facilities and equipment, as identified in Appendix A of the GIA, that are located between the Generating Facility and the Point of Change of Ownership, including any modification, addition, or upgrades to such facilities and equipment necessary to physically and electrically interconnect the Generating Facility to the Distribution Provider's Distribution System. Interconnection Customer's Interconnection Facilities are sole use facilities.

Interconnection Facilities shall mean the Distribution Provider's Interconnection Facilities and the Interconnection Customer's Interconnection Facilities. Collectively, Interconnection Facilities include all facilities and equipment between the Generating Facility and the Point of Interconnection, including any modification, additions or upgrades that are necessary to physically and electrically interconnect the Generating Facility to the Distribution Provider's Distribution System. Interconnection Facilities are sole use facilities and shall not include Distribution Upgrades, Stand Alone Network Upgrades or Network Upgrades.

Interconnection Facilities Study shall mean a study conducted by the Distribution Provider for an Interconnection Customer under the Independent Study Process to determine a list of facilities (including Distribution Provider's Interconnection Facilities, Distribution Upgrades, and Network Upgrades as identified in the Interconnection System Impact Study), the cost of those facilities, and the time required to interconnect the Generating Facility with the Distribution Provider's Distribution System. The scope of the study is defined in GIP Section 5.8.2.1.

Interconnection Financial Security shall have the meaning assigned to it in Section 5.9 of the GIP.

Interconnection Handbook shall mean a handbook, developed by the Distribution Provider and posted on the Distribution Provider's website or otherwise made available by the Distribution Provider, describing the technical and operational requirements for wholesale generators and loads connected to the Distribution System, as such handbook may be modified or superseded from time to time. Distribution Provider's standards contained in the Interconnection Handbook shall be deemed consistent with Good Utility Practice and Applicable Reliability Standards. In the event of a conflict between the terms of this GIA and the terms of the Distribution Provider's Interconnection Handbook, the terms in this GIA shall govern.

Interconnection Request shall mean an Interconnection Customer's request, in the form of Appendix 1 to the GIP, in accordance with the Tariff, to interconnect a new Generating Facility, or to increase the capacity of, or make a Material Modification to the operating characteristics of, an existing Generating Facility that is interconnected with the Distribution Provider's Distribution System.

Interconnection Service shall mean the service provided by the Distribution Provider associated with interconnecting the Interconnection Customer's Generating Facility to the Distribution Provider's Distribution System and enabling it to receive electric energy and capacity from the Generating Facility at the Point of Interconnection, pursuant to the terms of the GIA and, if applicable, the Distribution Provider's Tariff.

Interconnection Study shall mean any of the following studies: the Interconnection System Impact Study and the Interconnection Facilities Study described in Section 5.8.1 and Section 5.8.2 of the GIP.

Interconnection System Impact Study shall mean an engineering study conducted by the Distribution Provider for an Interconnection Customer under the Independent Study Process that evaluates the impact of the proposed interconnection on the safety and reliability of Distribution Provider's Distribution System and, if applicable, an Affected System. The scope of the study is defined in GIP Section 5.8.1.1.

IRS shall mean the Internal Revenue Service.

ISO shall mean the California Independent System Operator Corporation, a state-chartered, nonprofit, corporation that controls certain transmission facilities of all Participating Transmission Owners and dispatches certain generating units and loads.

ISO Grid shall mean the system of transmission lines and associated facilities of the Participating Transmission Owners that have been placed under the ISO's Operational Control.

ISO Tariff shall mean the California Independent System Operator Corporation Operating Agreement and Tariff, dated March 31, 1997, as it may be modified from time to time, and accepted by the FERC.

ISO's Generator Interconnection Procedures (ISO Tariff GIP) shall mean the procedures included in Appendix Y of the ISO Tariff to interconnect a Generating Facility directly to the ISO Grid, as such procedures may be modified from time to time, and accepted by the Commission.

Loss shall mean any and all losses relating to injury to or death of any person or damage to property, demand, suits, recoveries, costs and expenses, court costs, attorney fees, and all other obligations by or to third parties, arising out of or resulting from the other Party's performance, or non-performance of its obligations under the GIA on behalf of the indemnifying Party, except in cases of gross negligence or intentional wrongdoing by the indemnifying Party.

Material Modification shall mean those modifications that have a material impact on the cost or timing of any Interconnection Request with a later queue priority date.

Metering Equipment shall mean all metering equipment installed or to be installed at the Generating Facility pursuant to the GIA at the metering points, including but not limited to instrument transformers, MWh-meters, data acquisition equipment, transducers, remote terminal unit, communications equipment, phone lines, and fiber optics.

NERC shall mean the North American Electric Reliability Council or its successor organization.

Network Upgrades shall mean Delivery Network Upgrades and Reliability Network Upgrades.

Notice of Dispute shall mean a written notice of a dispute or claim that arises out of or in connection with the GIA or its performance.

Off-Peak Deliverability Assessment shall mean the technical study performed under Section 4.5.4.2.2 of the GIP.

On-Peak Deliverability Assessment shall mean the technical study performed under Section 4.5.4.2.1 of the GIP.

Operational Control shall mean the rights of the ISO under the Transmission Control Agreement and the ISO Tariff to direct the parties to the Transmission Control Agreement how to operate their transmission lines and facilities and other electric plant affecting the reliability of those lines and facilities for the purpose of affording comparable non-discriminatory transmission access and meeting applicable reliability criteria.

Participating Transmission Owner shall mean an entity which (i) owns, operates, and maintains transmission lines and associated facilities and/or has entitlements to use certain transmission lines and associated facilities and (ii) has transferred to the ISO operational control of such facilities and/or entitlements to be made part of the ISO Grid.

Party or Parties shall mean Distribution Provider, Distribution Owner, Interconnection Customer or any combination of the above.

Point of Change of Ownership shall mean the point, as set forth in Appendix A to the GIA, where the Interconnection Customer's Interconnection Facilities connect to the Distribution Provider's Interconnection Facilities.

Point of Interconnection shall mean the point, as set forth in Appendix A to the GIA, where the Interconnection Facilities connect to the Distribution Provider's Distribution System.

Pre-Construction Activities shall mean the actions by the Distribution Provider, other than those required by an Engineering and Procurement Agreement under Section 8 of the GIP, undertaken prior to Construction Activities in order to prepare for the construction of the Distribution Provider's Interconnection Facilities, Distribution Upgrades, or Network Upgrades assigned to the Interconnection Customer, including, but not limited to, preliminary engineering, permitting activities, environmental analysis, or other activities specifically needed to obtain governmental approvals for the Distribution Provider's Interconnection Facilities, Distribution Upgrades, or Network Upgrades.

Reasonable Efforts shall mean, with respect to an action required to be attempted or taken by a Party under the GIA, efforts that are timely and consistent with Good Utility Practice and are otherwise substantially equivalent to those a Party would use to protect its own interests.

Reliability Network Upgrades shall mean the transmission facilities at or beyond the point where the Distribution Provider's Distribution System interconnects to the ISO Grid, necessary to interconnect one or more Generating Facility(ies) safely and reliably to the ISO Grid, which would not have been necessary but for the interconnection of one or more Generating Facility(ies), including Network Upgrades necessary to remedy short circuit or stability problems, or thermal overloads. Reliability Network Upgrades shall only be deemed necessary for thermal overloads, occurring under any system condition, where such thermal overloads cannot be adequately mitigated through the ISO's congestion management, operating procedures, or special protection systems based on the characteristics of the Generating Facilities included in the interconnection Studies, limitations on market models, systems, or information, or other factors specifically identified in the Interconnection Studies. Reliability Network Upgrades also include, consistent with the Applicable Reliability Council's practice and Applicable Reliability Standards, the facilities necessary to mitigate any adverse impact the

Generating Facility's interconnection may have on a path's Applicable Reliability Council rating.

Results Meeting shall mean the meetings among the Distribution Provider, the Interconnection Customer, and, if applicable, the ISO to discuss either the results of the Interconnection System Impact Study as set forth in Section 5.8.1.3 of the GIP or the results of the Interconnection Facilities Study as set forth in Section 5.8.2.4 of the GIP.

Scoping Meeting shall mean the meeting between representatives of the Interconnection Customer and Distribution Provider, and if applicable, the ISO, conducted for the purpose of discussing alternative interconnection options, to exchange information including any transmission data and earlier study evaluations that would be reasonably expected to impact such interconnection options, to analyze such information, and to determine the potential feasible Points of Interconnection.

Site Exclusivity shall mean documentation reasonably demonstrating: (1) For private land: (a) Ownership of, a leasehold interest in, or a right to develop property upon which the Generating Facility will be located consisting of a minimum of 50% of the acreage reasonably necessary to accommodate the Generating Facility; or (b) an option to purchase or acquire a leasehold interest in property upon which the Generating Facility will be located consisting of a minimum of 50% of the acreage reasonably necessary to accommodate the Generating Facility. (2) For Public land, including that controlled or managed by any federal, state or local agency, a final, non-appealable permit, license, or other right to use the property for the purpose of generating electric power and in acreage reasonably necessary to accommodate the Generating Facility, which exclusive right to use public land under the management of the federal Bureau of Land Management shall be in a form specified by the Bureau of Land Management.

Stand Alone Network Upgrades shall mean Network Upgrades that an Interconnection Customer may construct without affecting day-to-day operations of the Transmission System during their construction. Both the Distribution Provider and the Interconnection Customer must agree as to what constitutes Stand Alone Network Upgrades and identify them in Appendix A to the GIA.

System Protection Facilities shall mean the equipment, including necessary protection signal communications equipment, required to protect (1) the Distribution Provider's Distribution System, the ISO Controlled Grid, and Affected Systems from faults or other electrical disturbances occurring at the Generating Facility and (2) the Generating Facility from faults or other electrical system disturbances occurring on the Distribution Provider's Distribution System, the ISO Controlled Grid or on other delivery systems or other generating systems to which the Distribution Provider's Distribution System and Transmission System is directly connected.

Tariff shall mean the Wholesale Distribution Access Tariff, the Distribution Provider's Tariff through which open access transmission service and Interconnection Service are offered, as filed with FERC, and as amended or supplemented from time to time, or any successor tariff.

Transmission Control Agreement shall mean ISO FERC Electric Tariff No. 7.

Transmission System shall mean those transmission facilities owned by the Distribution Provider that have been placed under the ISO's Operational Control and are part of the ISO Grid.

Trial Operation shall mean the period during which Interconnection Customer is engaged in on-site test operations and commissioning of the Generating Facility prior to Commercial Operation.

Uncontrollable Force shall mean any act of God, labor disturbance, act of the public enemy, war, insurrection, riot, fire, storm, flood, earthquake, explosion, breakage or accident to machinery or equipment, any curtailment, order, regulation or restriction imposed by governmental, military or lawfully established civilian authorities, or any other cause beyond the reasonable control of the Distribution Provider or Interconnection Customer which could not be avoided through the exercise of Good Utility Practice. An Uncontrollable Force event does not include acts of negligence or intentional wrongdoing by the Party claiming Uncontrollable Force.

Article 2. Effective Date, Term, and Termination

2.1 Effective Date. This GIA shall become effective upon execution by the Parties subject to acceptance by FERC (if applicable), or if filed unexecuted, upon the date specified by FERC. Distribution Provider shall promptly file this GIA with FERC upon execution in accordance with Article 3.1, if required.

2.2 Term of Agreement. Subject to the provisions of Article 2.3, this GIA shall remain in effect for a period of twenty-five (25) years from the Effective Date and shall be automatically renewed for each successive one-year period thereafter

2.3 Termination Procedures.

2.3.1 Written Notice. This GIA may be terminated by Interconnection Customer after giving Distribution Provider ninety (90) Calendar Days advance written notice, o by Distribution Provider notifying FERC after the Generating Facility permanently ceases Commercial Operation.

2.3.2 Default. Either Party may terminate this GIA in accordance with Article 17.

2.3.3 Suspension of Work. This GIA may be deemed terminated in accordance with Article 5.16.

2.3.4 Notwithstanding Articles 2.3.1 and 2.3.2, and 2.3.3, no termination shall become effective until the Parties have complied with all Applicable Laws and Regulations applicable to such termination, including the filing with FERC of a notice of termination of this GIA, which notice has been accepted for filing by FERC, and the Interconnection Customer has fulfilled its termination cost obligations under Article 2.4.

2.4 Termination Costs. If a Party elects to terminate this Agreement pursuant to Article 2.3 above, each Party shall pay all costs incurred (including any cancellation costs relating to orders or contracts for Interconnection Facilities and equipment) or charges assessed by the other Party, as of the date of the other Party's receipt of such notice of termination, that are the responsibility of the Terminating Party under this GIA. In the event of termination by a Party, the Parties shall use commercially Reasonable Efforts to mitigate the costs, damages and charges arising as a consequence of termination. Upon termination of this GIA, unless otherwise ordered or approved by FERC:

2.4.1 With respect to any portion of Distribution Provider's Interconnection Facilities that have not yet been constructed or installed, Distribution Provider shall to the extent possible and with Interconnection Customer's authorization cancel any pending orders of, or return, any materials or equipment for, or contracts for construction of, such facilities; provided that in the event Interconnection Customer elects not to authorize such cancellation, Interconnection Customer shall assume all payment obligations with respect to such materials, equipment, and contracts, and Distribution Provider shall deliver such material and equipment, and, if necessary, assign such contracts, to Interconnection Customer as soon as practicable, at Interconnection Customer's expense. To the extent that Interconnection Customer has already paid Distribution Provider for any or all such costs of materials or equipment not taken by Interconnection Customer, Distribution Provider shall promptly refund such amounts to Interconnection Customer, less any costs, including penalties incurred by Distribution Provider to cancel any pending orders of or return such materials, equipment, or contracts.

If an Interconnection Customer terminates this GIA, it shall be responsible for all costs incurred in association with that Interconnection Customer's interconnection, including any cancellation costs relating to orders or contracts for Interconnection Facilities and equipment, and other expenses including any Distribution Upgrades and Network Upgrades for which Distribution Provider has incurred expenses and has not been reimbursed by Interconnection Customer.

2.4.2 Distribution Provider may, at its option, retain any portion of such materials, equipment, or facilities that Interconnection Customer chooses not to accept delivery of, in which case Distribution Provider shall be responsible for all costs associated with procuring such materials, equipment, or facilities.

2.4.3 With respect to any portion of the Interconnection Facilities, and any other facilities already installed or constructed pursuant to the terms of this GIA, Interconnection Customer shall be responsible for all costs associated with the removal, relocation or other disposition or retirement of such materials, equipment, or facilities.

2.5 Disconnection. Upon termination of this GIA, the Parties will take all appropriate steps to disconnect the Generating Facility from the Distribution System. All costs required to effectuate such disconnection shall be borne by the terminating Party, unless such

termination resulted from the non-terminating Party's Default of this GIA or such non-terminating Party otherwise is responsible for these costs under this GIA.

2.6 **Survival.** This GIA shall continue in effect after termination to the extent necessary to provide for final billings and payments and for costs incurred hereunder, including billings and payments pursuant to this GIA; to permit the determination and enforcement of liability and indemnification obligations arising from acts or events that occurred while this GIA was in effect; and to permit each Party to have access to the lands of the other Party pursuant to this GIA or other applicable agreements, to disconnect, remove or salvage its own facilities and equipment.

Article 3. Regulatory Filings

3.1 **Filing.** Distribution Provider shall file this GIA (and any amendment hereto) with the appropriate Governmental Authority, if required. Interconnection Customer may request that any information so provided be subject to the confidentiality provisions of Article 22. If Interconnection Customer has executed this GIA, or any amendment thereto, Interconnection Customer shall reasonably cooperate with Distribution Provider with respect to such filing and to provide any information reasonably requested by Distribution Provider needed to comply with applicable regulatory requirements.

Article 4. Scope of Service

4.1 **Interconnection Service.** Interconnection Service allows Interconnection Customer to connect the Generating Facility to the Distribution System and be eligible to deliver the Generating Facility's output using the capacity of the Distribution System to the ISO Grid. To the extent Interconnection Customer wants to receive Interconnection Service, Distribution Provider shall construct facilities identified in Appendices A and C that the Distribution Provider is responsible to construct.

4.1.1 **Distribution Service Implications.** Interconnection Customer will be eligible to inject power from the Generating Facility into Distribution Provider's Distribution System pursuant to the Tariff. The Interconnection Customer may not deliver power over the Distribution Provider's Distribution System absent procuring Distribution Service. The Interconnection Customer must apply for Distribution Service pursuant to Section 15.2 of the Tariff and meet the conditions specified in Section 14 of the Tariff to be eligible for Distribution Service.

4.1.2 **Transmission Service Implications.** Interconnection Service does not necessarily provide Interconnection Customer with the capability to physically deliver the output of its Generating Facility to any particular load on the ISO Grid without incurring congestion costs. In the event of transmission constraints on the ISO Grid, Interconnection Customer's Generating Facility shall be subject to the applicable congestion management procedures in the ISO Tariff in the same manner as all other resources. The Interconnection Customer shall be solely

responsible for completing all of the necessary arrangements required under the ISO Tariff to be eligible to schedule the output of its resource.

4.2 **Provision of Service.** Distribution Provider shall provide Interconnection Service for the Generating Facility at the Point of Interconnection.

4.3 **Performance Standards.** Each Party shall perform all of its obligations under this GIA in accordance with Applicable Laws and Regulations, Applicable Reliability Standards, and Good Utility Practice, and to the extent a Party is required or prevented or limited in taking any action by such regulations and standards, such Party shall not be deemed to be in Breach of this GIA for its compliance therewith. If such Party is a Distribution Provider or Distribution Owner, then that Party shall amend the GIA and submit the amendment to FERC for approval.

4.4 **No Distribution Service or Transmission Service.** The execution of this GIA does not constitute a request for, nor the provision of, Distribution Service under the Tariff or any transmission service under the ISO Tariff.

4.5 **Interconnection Customer Provided Services.** The services provided by Interconnection Customer under this GIA are set forth in Article 9.6 and Article 13.5.1. Interconnection Customer shall be paid for such services in accordance with Article 11.6.

Article 5. Interconnection Facilities Engineering, Procurement, and Construction

5.1 **Options.** Unless otherwise mutually agreed to between the Parties, Interconnection Customer shall select the In-Service Date, Initial Synchronization Date, and Commercial Operation Date; and either Standard Option or Alternate Option set forth below for completion of Distribution Provider's Interconnection Facilities, Distribution Upgrades, and Network Upgrades as set forth in Appendix A, Interconnection Facilities, Distribution Upgrades, and Network Upgrades, and such dates and selected option shall be set forth in Appendix B, Milestones.

5.1.1 **Standard Option.** Distribution Provider shall design, procure, and construct Distribution Provider's Interconnection Facilities, Distribution Upgrades, and Network Upgrades, using Reasonable Efforts to complete Distribution Provider's Interconnection Facilities, Distribution Upgrades, and Network Upgrades by the dates set forth in Appendix B, Milestones. Distribution Provider shall not be required to undertake any action which is inconsistent with its standard safety practices, its material and equipment specifications, its design criteria and construction procedures, its labor agreements, and Applicable Laws and Regulations. In the event Distribution Provider reasonably expects that it will not be able to complete Distribution Provider's Interconnection Facilities, Distribution Upgrades, and Network Upgrades by the specified dates, Distribution Provider shall promptly provide written notice to Interconnection Customer and shall undertake Reasonable Efforts to meet the earliest dates thereafter.

5.1.2 Alternate Option. If the dates designated by Interconnection Customer are acceptable to Distribution Provider, Distribution Provider shall so notify Interconnection Customer within thirty (30) Calendar Days, and shall assume responsibility for the design, procurement and construction of Distribution Provider's Interconnection Facilities and Distribution Upgrades by the designated dates.

If Distribution Provider subsequently fails to complete Distribution Provider's Interconnection Facilities and Distribution Upgrades by the In-Service Date, to the extent necessary to provide back feed power; or fails to complete Network Upgrades by the Initial Synchronization Date to the extent necessary to allow for Trial Operation at full power output, unless other arrangements are made by the Parties for such Trial Operation; or fails to complete the Network Upgrades by the Commercial Operation Date, as such dates are reflected in Appendix B, Milestones; Distribution Provider shall pay Interconnection Customer liquidated damages in accordance with Article 5.3, Liquidated Damages, provided, however, the dates designated by Interconnection Customer shall be extended day for day for each day that the ISO refuses to grant clearances to install equipment.

5.1.3 Option to Build. If the dates designated by Interconnection Customer are not acceptable to Distribution Provider, Distribution Provider shall so notify Interconnection Customer within thirty (30) Calendar Days, and unless the Parties agree otherwise, Interconnection Customer shall have the option to assume responsibility for the design, procurement and construction of Distribution Provider's Interconnection Facilities and Stand Alone Network Upgrades on the dates specified in Article 5.1.2. Distribution Provider and Interconnection Customer must agree as to what constitutes Stand Alone Network Upgrades and identify such Stand Alone Network Upgrades in Appendix A. Except for Stand Alone Network Upgrades, Interconnection Customer shall have no right to construct Network Upgrades under this option.

5.1.4 Negotiated Option. If Interconnection Customer elects not to exercise its option under Article 5.1.3, Option to Build, Interconnection Customer shall so notify Distribution Provider within thirty (30) Calendar Days, and the Parties shall in good faith attempt to negotiate terms and conditions (including revision of the specified dates and liquidated damages, the provision of incentives or the procurement and construction of a portion of Distribution Provider's Interconnection Facilities and Stand Alone Network Upgrades by Interconnection Customer) pursuant to which Distribution Provider is responsible for the design, procurement and construction of Distribution Provider's Interconnection Facilities, Distribution Upgrades, and Network Upgrades. If the Parties are unable to reach agreement on such terms and conditions, Distribution Provider shall assume responsibility for the design, procurement and construction of Distribution Provider's Interconnection Facilities, Distribution Upgrades, and Network Upgrades pursuant to 5.1.1, Standard Option.

5.2 General Conditions Applicable to Option to Build. If Interconnection Customer assumes responsibility for the design, procurement and construction of Distribution Provider's Interconnection Facilities and Stand Alone Network Upgrades,

(1) Interconnection Customer shall engineer, procure equipment, and construct Distribution Provider's Interconnection Facilities and Stand Alone Network Upgrades (or portions thereof) using Good Utility Practice and using standards and specifications provided in advance by Distribution Provider;

(2) Interconnection Customer's engineering, procurement and construction of Distribution Provider's Interconnection Facilities and Stand Alone Network Upgrades shall comply with all requirements of law to which Distribution Provider would be subject in the engineering, procurement or construction of Distribution Provider's Interconnection Facilities and Stand Alone Network Upgrades;

(3) Distribution Provider shall review and approve the engineering design, equipment acceptance tests, and the construction of Distribution Provider's Interconnection Facilities and Stand Alone Network Upgrades;

(4) prior to commencement of construction, Interconnection Customer shall provide to Distribution Provider a schedule for construction of Distribution Provider's Interconnection Facilities and Stand Alone Network Upgrades, and shall promptly respond to requests for information from Distribution Provider;

(5) at any time during construction, Distribution Provider shall have the right to gain unrestricted access to Distribution Provider's Interconnection Facilities and Stand Alone Network Upgrades and to conduct inspections of the same;

(6) at any time during construction, should any phase of the engineering, equipment procurement, or construction of Distribution Provider's Interconnection Facilities and Stand Alone Network Upgrades not meet the standards and specifications provided by Distribution Provider, Interconnection Customer shall be obligated to remedy deficiencies in that portion of Distribution Provider's Interconnection Facilities and Stand Alone Network Upgrades;

(7) Interconnection Customer shall indemnify Distribution Provider for claims arising from Interconnection Customer's construction of Distribution Provider's Interconnection Facilities and Stand Alone Network Upgrades under the terms and procedures applicable to Article 18.1 Indemnity;

(8) Interconnection Customer shall transfer control of Distribution Provider's Interconnection Facilities to the Distribution Provider and shall transfer Operational Control of Stand Alone Network Upgrades to the ISO;

(9) Unless Parties otherwise agree, Interconnection Customer shall transfer ownership of Distribution Provider's Interconnection Facilities and Stand-Alone Network Upgrades to Distribution Provider;

(10) Distribution Provider shall approve and accept for operation and maintenance Distribution Provider's Interconnection Facilities and Stand Alone Network Upgrades to the extent engineered, procured, and constructed in accordance with this Article 5.2; and

(11) Interconnection Customer shall deliver to Distribution Provider "as-built" drawings, information, and any other documents that are reasonably required by Distribution Provider to assure that the Interconnection Facilities and Stand-Alone Network Upgrades are built to the standards and specifications required by Distribution Provider.

5.3 Liquidated Damages. The actual damages to Interconnection Customer, in the event Distribution Provider's Interconnection Facilities, Distribution Upgrades, or Network Upgrades are not completed by the dates designated by Interconnection Customer and accepted by Distribution Provider pursuant to subparagraphs 5.1.2 or 5.1.4, above, may include Interconnection Customer's fixed operation and maintenance costs and lost opportunity costs. Such actual damages are uncertain and impossible to determine at this time. Because of such uncertainty, any liquidated damages paid by Distribution Provider to Interconnection Customer in the event that Distribution Provider does not complete any portion of Distribution Provider's Interconnection Facilities, Distribution Upgrades, or Network Upgrades by the applicable dates, shall be an amount equal to ½ of 1 percent per day of the actual cost of Distribution Provider's Interconnection Facilities, Distribution Upgrades, and Network Upgrades, in the aggregate, for which Distribution Provider has assumed responsibility to design, procure and construct.

However, in no event shall the total liquidated damages exceed 20 percent of the actual cost of Distribution Provider's Interconnection Facilities, Distribution Upgrades, and Network Upgrades for which Distribution Provider has assumed responsibility to design, procure, and construct. The foregoing payments will be made by Distribution Provider to Interconnection Customer as just compensation for the damages caused to Interconnection Customer, which actual damages are uncertain and impossible to determine at this time, and as reasonable liquidated damages, but not as a penalty or a method to secure performance of this GIA. Liquidated damages, when the Parties agree to them, are the exclusive remedy for the Distribution Provider's failure to meet its schedule.

No liquidated damages shall be paid to Interconnection Customer if: (1) Interconnection Customer is not ready to commence use of Distribution Provider's Interconnection Facilities, Distribution Upgrades, or Network Upgrades to take the delivery of power for the Generating Facility's Trial Operation or to export power from the Generating Facility on the specified dates, unless Interconnection Customer would have been able to commence use of Distribution Provider's Interconnection Facilities, Distribution

Upgrades, or Network Upgrades to take the delivery of power for Generating Facility's Trial Operation or to export power from the Generating Facility, but for Distribution Provider's delay; (2) Distribution Provider's failure to meet the specified dates is the result of the action or inaction of Interconnection Customer or any other Interconnection Customer who has entered into a GIA with Distribution Provider, action or inaction by the ISO, or any cause beyond Distribution Provider's reasonable control or reasonable ability to cure; (3) the Interconnection Customer has assumed responsibility for the design, procurement and construction of Distribution Provider's Interconnection Facilities and Stand Alone Network Upgrades; or (4) the Parties have otherwise agreed.

5.4 **Power System Stabilizers.** The Interconnection Customer shall procure, install, maintain and operate Power System Stabilizers in accordance with Applicable Reliability Standards, the guidelines and procedures established by the Applicable Reliability Council, and in accordance with the provisions of Section 4.6.5.1 of the ISO Tariff. Distribution Provider reserves the right to reasonably establish minimum acceptable settings for any installed Power System Stabilizers, subject to the design and operating limitations of the Generating Facility. If the Generating Facility's Power System Stabilizers are removed from service or not capable of automatic operation, Interconnection Customer shall immediately notify Distribution Provider and Distribution Provider's system operator, or its designated representative. The requirements of this paragraph shall not apply to wind generators of the induction type.

5.5 **Equipment Procurement.** If responsibility for construction of Distribution Provider's Interconnection Facilities, Distribution Upgrades, or Network Upgrades is to be borne by Distribution Provider, then Distribution Provider shall commence design of Distribution Provider's Interconnection Facilities, Distribution Upgrades, or Network Upgrades and procure necessary equipment as soon as practicable after all of the following conditions are satisfied, unless the Parties otherwise agree in writing:

5.5.1 Distribution Provider has completed the Interconnection Studies pursuant to the Independent Study Process Study Agreement;

5.5.2 Distribution Provider has received written authorization to proceed with design and procurement from Interconnection Customer by the date specified in Appendix B, Milestones; and

5.5.3 Interconnection Customer has provided security to Distribution Provider in accordance with Article 11.5 by the dates specified in Appendix B, Milestones.

5.6 **Construction Commencement.** Distribution Provider shall commence construction of Distribution Provider's Interconnection Facilities, Distribution Upgrades, and Network Upgrades for which it is responsible as soon as practicable after the following additional conditions are satisfied:

5.6.1 Approval of the appropriate Governmental Authority has been obtained for any facilities requiring regulatory approval;

5.6.2 Necessary real property rights and rights-of-way have been obtained, to the extent required for the construction of a discrete aspect of Distribution Provider's Interconnection Facilities, Distribution Upgrades, and Network Upgrades;

5.6.3 Distribution Provider has received written authorization to proceed with construction from Interconnection Customer by the date specified in Appendix B, Milestones; and

5.6.4 Interconnection Customer has provided security to Distribution Provider in accordance with Article 11.5 by the dates specified in Appendix B, Milestones.

5.7 **Work Progress.** The Parties will keep each other advised periodically as to the progress of their respective design, procurement and construction efforts. Either Party may, at any time, request a progress report from the other Party. If, at any time, Interconnection Customer determines that the completion of Distribution Provider's Interconnection Facilities will not be required until after the specified In-Service Date, Interconnection Customer will provide written notice to Distribution Provider of such later date upon which the completion of Distribution Provider's Interconnection Facilities will be required.

5.8 **Information Exchange.** As soon as reasonably practicable after the Effective Date, the Parties shall exchange information regarding the design and compatibility of the Parties' Interconnection Facilities and compatibility of the Interconnection Facilities with Distribution Provider's Distribution System, and shall work diligently and in good faith to make any necessary design changes.

5.9 **Limited Operation.** If any of Distribution Provider's Interconnection Facilities, Distribution Upgrades, or Network Upgrades are not reasonably expected to be completed prior to the Commercial Operation Date of the Generating Facility, Distribution Provider shall, upon the request and at the expense of Interconnection Customer, perform operating studies on a timely basis to determine the extent to which the Generating Facility and Interconnection Customer's Interconnection Facilities may operate prior to the completion of Distribution Provider's Interconnection Facilities, Distribution Upgrades, or Network Upgrades consistent with Applicable Laws and Regulations, Applicable Reliability Standards, Good Utility Practice, and this GIA. Distribution Provider shall permit Interconnection Customer to operate the Generating Facility and Interconnection Customer's Interconnection Facilities in accordance with the results of such studies.

5.10 **Interconnection Customer's Interconnection Facilities ('ICIF').** Interconnection Customer shall, at its expense, design, procure, construct, own and install the ICIF, as set forth in Appendix A, Interconnection Facilities, Network Upgrades and Distribution Upgrades.

5.10.1 Interconnection Customer's Interconnection Facility Specifications. Interconnection Customer shall submit initial specifications for the ICIF, including System Protection Facilities, to Distribution Provider at least one hundred eighty (180) Calendar Days prior to the Initial Synchronization Date; and final specifications for review and comment at least ninety (90) Calendar Days prior to the Initial Synchronization Date. Distribution Provider shall review such specifications to ensure that the ICIF are compatible with the technical specifications, operational control, and safety requirements of Distribution Provider and comment on such specifications within thirty (30) Calendar Days of Interconnection Customer's submission. All specifications provided hereunder shall be deemed confidential.

5.10.2 Distribution Provider's Review. Distribution Provider's review of Interconnection Customer's final specifications shall not be construed as confirming, endorsing, or providing a warranty as to the design, fitness, safety, durability or reliability of the Generating Facility, or the ICIF. Interconnection Customer shall make such changes to the ICIF as may reasonably be required by Distribution Provider, in accordance with Good Utility Practice, to ensure that the ICIF are compatible with the technical specifications, operational control, and safety requirements of Distribution Provider.

5.10.3 ICIF Construction. The ICIF shall be designed and constructed in accordance with Good Utility Practice. Within one hundred twenty (120) Calendar Days after the Commercial Operation Date, unless the Parties agree on another mutually acceptable deadline, Interconnection Customer shall deliver to Distribution Provider "as-built" drawings, information and documents for the ICIF, such as: a one-line diagram, a site plan showing the Generating Facility and the ICIF, plan and elevation drawings showing the layout of the ICIF, a relay functional diagram, relaying AC and DC schematic wiring diagrams and relay settings for all facilities associated with Interconnection Customer's step-up transformers, the facilities connecting the Generating Facility to the step-up transformers and the ICIF, and the impedances (determined by factory tests) for the associated step-up transformers and the Generating Facility. The Interconnection Customer shall provide Distribution Provider specifications for the excitation system, automatic voltage regulator, Generating Facility control and protection settings, transformer tap settings, and communications, if applicable.

5.10.4 Interconnection Customer to Meet Requirements of the Distribution Provider's Interconnection Handbook. The Interconnection Customer shall comply with the Distribution Provider's Interconnection Handbook. In the event of a conflict between the terms of this GIA and the terms of the Distribution Provider's Interconnection Handbook, the terms in this GIA shall govern.

5.11 Distribution Provider's Interconnection Facilities Construction. Distribution Provider's Interconnection Facilities shall be designed and constructed in accordance with Good Utility Practice. Upon request, within one hundred twenty (120) Calendar Days

after the Commercial Operation Date, unless the Parties agree on another mutually acceptable deadline, Distribution Provider shall deliver to Interconnection Customer the following "as-built" drawings, information and documents for Distribution Provider's Interconnection Facilities: No as-built drawings will be provided.

Distribution Provider will obtain control for operating and maintenance purposes of Distribution Provider's Interconnection Facilities and Stand Alone Network Upgrades upon completion of such facilities. Pursuant to Article 5.2, the ISO will obtain Operational Control of the Stand Alone Network Upgrades prior to the Commercial Operation Date.

5.12 **Access Rights.** Upon reasonable notice and supervision by a Party, and subject to any required or necessary regulatory approvals, a Party ("Granting Party") shall furnish at no cost to the other Party ("Access Party") any rights of use, licenses, rights of way and easements with respect to lands owned or controlled by the Granting Party, its agents (if allowed under the applicable agency agreement), or any Affiliate, that are necessary to enable the Access Party to obtain ingress and egress to construct, operate, maintain, repair, test (or witness testing), inspect, replace or remove facilities and equipment to: (i) interconnect the Generating Facility with the Distribution System; (ii) operate and maintain the Generating Facility, the Interconnection Facilities and the Distribution System; and (iii) disconnect or remove the Access Party's facilities and equipment upon termination of this GIA. In exercising such licenses, rights of way and easements, the Access Party shall not unreasonably disrupt or interfere with normal operation of the Granting Party's business and shall adhere to the safety rules and procedures established in advance, as may be changed from time to time, by the Granting Party and provided to the Access Party.

5.13 **Lands of Other Property Owners.** If any part of Distribution Provider or Distribution Owner's Interconnection Facilities, Distribution Upgrades, and/or Network Upgrades is to be installed on property owned by persons other than Interconnection Customer or Distribution Provider or Distribution Owner, Distribution Provider or Distribution Owner shall at Interconnection Customer's expense use efforts, similar in nature and extent to those that it typically undertakes on its own behalf or on behalf of its Affiliates, including use of its eminent domain authority, and to the extent consistent with state law, to procure from such persons any rights of use, licenses, rights of way and easements that are necessary to construct, operate, maintain, test, inspect, replace or remove Distribution Provider or Distribution Owner's Interconnection Facilities, Distribution Upgrades, and/or Network Upgrades upon such property.

5.14 **Permits.** Distribution Provider or Distribution Owner and Interconnection Customer shall cooperate with each other in good faith in obtaining all permits, licenses and authorizations that are necessary to accomplish the interconnection in compliance with Applicable Laws and Regulations. With respect to this paragraph, Distribution Provider or Distribution Owner shall provide permitting assistance to Interconnection Customer comparable to that provided to Distribution Provider's own, or an Affiliate's generation.

5.15 Early Construction of Base Case Facilities. Interconnection Customer may request Distribution Provider to construct, and Distribution Provider shall construct, using Reasonable Efforts to accommodate Interconnection Customer's In-Service Date, all or any portion of any Distribution Upgrades or Network Upgrades required for Interconnection Customer to be interconnected to the Distribution System which are included in the Base Case of the Facilities Study for Interconnection Customer, and which also are required to be constructed for another Interconnection Customer, but where such construction is not scheduled to be completed in time to achieve Interconnection Customer's In-Service Date.

5.16 Suspension. Interconnection Customer reserves the right, upon written notice to Distribution Provider, to suspend at any time all work by Distribution Provider associated with the construction and installation of Distribution Provider's Interconnection Facilities, Distribution Upgrades, and/or Network Upgrades required under this GIA, with the condition that Distribution System shall be left in a safe and reliable condition in accordance with Good Utility Practice and Distribution Provider's safety and reliability criteria. In such event, Interconnection Customer shall be responsible for all reasonable and necessary costs which Distribution Provider (i) has incurred pursuant to this GIA prior to the suspension and (ii) incurs in suspending such work, including any costs incurred to perform such work as may be necessary to ensure the safety of persons and property and the integrity of the Distribution System and Transmission System during such suspension and, if applicable, any costs incurred in connection with the cancellation or suspension of material, equipment and labor contracts which Distribution Provider cannot reasonably avoid; provided, however, that prior to canceling or suspending any such material, equipment or labor contract, Distribution Provider shall obtain Interconnection Customer's authorization to do so.

Distribution Provider shall invoice Interconnection Customer for such costs pursuant to Article 12 and shall use due diligence to minimize its costs. In the event Interconnection Customer suspends work by Distribution Provider required under this GIA pursuant to this Article 5.16, and has not requested Distribution Provider to recommence the work or has not itself recommenced work required under this GIA on or before the expiration of three (3) years following commencement of such suspension, this GIA shall be deemed terminated and the Interconnection Customer's responsibility for costs will be determined in accordance with Article 2.4 of this GIA. The three-year period shall begin on the date the suspension is requested, or the date of the written notice to Distribution Provider, if no effective date is specified. The maximum three-year period shall apply to the projected Commercial Operation Date for the Generating Facility identified in the initial Interconnection Request, without regard to any subsequent changes to the dates set forth in the Interconnection Request, without regard to the milestone schedule dates set forth in Appendix B hereto or any changes to those dates, and without regard to any other scheduled dates for action affecting the Generating Facility, Interconnection Facilities, or Network Upgrades or any changes to those dates.

5.17 Taxes.

5.17.1 Interconnection Customer Payments Not Taxable. The Parties intend that all payments or property transfers made by Interconnection Customer to Distribution Provider for the installation of Distribution Provider's Interconnection Facilities, Distribution Upgrades, and the Network Upgrades shall be non-taxable, either as contributions to capital, or as an advance, in accordance with the Internal Revenue Code and any applicable state income tax laws and shall not be taxable as contributions in aid of construction or otherwise under the Internal Revenue Code and any applicable state income tax laws.

5.17.2 Representations and Covenants. In accordance with IRS Notice 2001-82 and IRS Notice 88-129, Interconnection Customer represents and covenants that (i) ownership of the electricity generated at the Generating Facility will pass to another party prior to the transmission of the electricity on the Distribution System, (ii) for income tax purposes, the amount of any payments and the cost of any property transferred to Distribution Provider for Distribution Provider's Interconnection Facilities will be capitalized by Interconnection Customer as an intangible asset and recovered using the straight-line method over a useful life of twenty (20) years, and (iii) any portion of Distribution Provider's Interconnection Facilities that is a "dual-use intertie," within the meaning of IRS Notice 88-129, is reasonably expected to carry only a de minimis amount of electricity in the direction of the Generating Facility. For this purpose, "de minimis amount" means no more than 5 percent of the total power flows in both directions, calculated in accordance with the "5 percent test" set forth in IRS Notice 88-129. This is not intended to be an exclusive list of the relevant conditions that must be met to conform to IRS requirements for non-taxable treatment.

At Distribution Provider's request, Interconnection Customer shall provide Distribution Provider with a report from an independent engineer confirming its representation in clause (iii), above. Distribution Provider represents and covenants that the cost of Distribution Provider's Interconnection Facilities paid for by Interconnection Customer will have no net effect on the base upon which rates are determined.

5.17.3 Indemnification for the Cost Consequences of Current Tax Liability Imposed Upon the Distribution Provider. Notwithstanding Article 5.17.1, Interconnection Customer shall protect, indemnify and hold harmless Distribution Provider from the cost consequences of any current tax liability imposed against Distribution Provider as the result of payments or property transfers made by Interconnection Customer to Distribution Provider under this GIA for Interconnection Facilities, as well as any interest and penalties, other than interest and penalties attributable to any delay caused by Distribution Provider.

Distribution Provider shall not include a gross-up for the cost consequences of any current tax liability in the amounts it charges Interconnection Customer under this GIA unless (i) Distribution Provider has determined, in good faith, that the payments or property transfers made by Interconnection Customer to Distribution

Provider should be reported as income subject to taxation or (ii) any Governmental Authority directs Distribution Provider to report payments or property as income subject to taxation; provided, however, that Distribution Provider may require Interconnection Customer to provide security for Interconnection Facilities, in a form reasonably acceptable to Distribution Provider (such as a parental guarantee or a letter of credit), in an amount equal to the cost consequences of any current tax liability under this Article 5.17. Interconnection Customer shall reimburse Distribution Provider for such costs on a fully grossed-up basis, in accordance with Article 5.17.4, within thirty (30) Calendar Days of receiving written notification from Distribution Provider of the amount due, including detail about how the amount was calculated.

The indemnification obligation shall terminate at the earlier of (1) the expiration of the ten year testing period and the applicable statute of limitation, as it may be extended by Distribution Provider upon request of the IRS, to keep these years open for audit or adjustment, or (2) the occurrence of a subsequent taxable event and the payment of any related indemnification obligations as contemplated by this Article 5.17.

5.17.4 Tax Gross-Up Amount. Interconnection Customer's liability for the cost consequences of any current tax liability under this Article 5.17 shall be calculated on a fully grossed-up basis. Except as may otherwise be agreed to by the parties, this means that Interconnection Customer will pay Distribution Provider, in addition to the amount paid for the Interconnection Facilities, Distribution Upgrades, and Network Upgrades, an amount equal to (1) the current taxes imposed on Distribution Provider ("Current Taxes") on the excess of (a) the gross income realized by Distribution Provider as a result of payments or property transfers made by Interconnection Customer to Distribution Provider under this GIA (without regard to any payments under this Article 5.17) (the "Gross Income Amount") over (b) the present value of future tax deductions for depreciation that will be available as a result of such payments or property transfers (the "Present Value Depreciation Amount"), plus (2) an additional amount sufficient to permit Distribution Provider to receive and retain, after the payment of all Current Taxes, an amount equal to the net amount described in clause (1).

For this purpose, (i) Current Taxes shall be computed based on Distribution Provider's composite federal and state tax rates at the time the payments or property transfers are received and Distribution Provider will be treated as being subject to tax at the highest marginal rates in effect at that time (the "Current Tax Rate"), and (ii) the Present Value Depreciation Amount shall be computed by discounting Distribution Provider's anticipated tax depreciation deductions as a result of such payments or property transfers by Distribution Provider's current weighted average cost of capital. Thus, the formula for calculating Interconnection Customer's liability to Distribution Owner pursuant to this Article 5.17.4 can be expressed as follows: (Current Tax Rate x (Gross Income Amount – Present Value of Tax Depreciation))/(1-Current Tax Rate). Interconnection

Customer's estimated tax liability in the event taxes are imposed shall be stated in Appendix A, Interconnection Facilities, Network Upgrades and Distribution Upgrades.

5.17.5 Private Letter Ruling or Change or Clarification of Law. At Interconnection Customer's request and expense, Distribution Provider shall file with the IRS a request for a private letter ruling as to whether any property transferred or sums paid, or to be paid, by Interconnection Customer to Distribution Provider under this GIA are subject to federal income taxation. Interconnection Customer will prepare the initial draft of the request for a private letter ruling, and will certify under penalties of perjury that all facts represented in such request are true and accurate to the best of Interconnection Customer's knowledge. Distribution Provider and Interconnection Customer shall cooperate in good faith with respect to the submission of such request.

Distribution Provider shall keep Interconnection Customer fully informed of the status of such request for a private letter ruling and shall execute either a privacy act waiver or a limited power of attorney, in a form acceptable to the IRS, that authorizes Interconnection Customer to participate in all discussions with the IRS regarding such request for a private letter ruling. Distribution Provider shall allow Interconnection Customer to attend all meetings with IRS officials about the request and shall permit Interconnection Customer to prepare the initial drafts of any follow-up letters in connection with the request.

5.17.6 Subsequent Taxable Events. If, within 10 years from the date on which the relevant Distribution Provider's Interconnection Facilities are placed in service, (i) Interconnection Customer Breaches the covenants contained in Article 5.17.2, (ii) a "disqualification event" occurs within the meaning of IRS Notice 88-129, or (iii) this GIA terminates and Transmission Provider retains ownership of the Interconnection Facilities, Distribution Upgrades, and Network Upgrades, Interconnection Customer shall pay a tax gross-up for the cost consequences of any current tax liability imposed on Distribution Provider, calculated using the methodology described in Article 5.17.4 and in accordance with IRS Notice 90-60.

5.17.7 Contests. In the event any Governmental Authority determines that Distribution Provider's receipt of payments or property constitutes income that is subject to taxation, Distribution Provider shall notify Interconnection Customer, in writing, within thirty (30) Calendar Days of receiving notification of such determination by a Governmental Authority. Upon the timely written request by Interconnection Customer and at Interconnection Customer's sole expense, Distribution Provider may appeal, protest, seek abatement of, or otherwise oppose such determination. Upon Interconnection Customer's written request and sole expense, Distribution Provider may file a claim for refund with respect to any taxes paid under this Article 5.17, whether or not it has received such a determination. Distribution Provider reserves the right to make all decisions with

regard to the prosecution of such appeal, protest, abatement or other contest, including the selection of counsel and compromise or settlement of the claim, but Distribution Provider shall keep Interconnection Customer informed, shall consider in good faith suggestions from Interconnection Customer about the conduct of the contest, and shall reasonably permit Interconnection Customer or an Interconnection Customer representative to attend contest proceedings.

Interconnection Customer shall pay to Distribution Provider on a periodic basis, as invoiced by Distribution Provider, Distribution Provider's documented reasonable costs of prosecuting such appeal, protest, abatement or other contest. At any time during the contest, Distribution Provider may agree to a settlement either with Interconnection Customer's consent or after obtaining written advice from nationally-recognized tax counsel, selected by Distribution Provider, but reasonably acceptable to Interconnection Customer, that the proposed settlement represents a reasonable settlement given the hazards of litigation. Interconnection Customer's obligation shall be based on the amount of the settlement agreed to by Interconnection Customer, or if a higher amount, so much of the settlement that is supported by the written advice from nationally-recognized tax counsel selected under the terms of the preceding sentence. The settlement amount shall be calculated on a fully-grossed-up basis to cover any related cost consequences of the current tax liability. Any settlement without Interconnection Customer's consent or such written advice will relieve Interconnection Customer from any obligation to indemnify Distribution Provider for the tax at issue in the contest.

5.17.8 Refund. In the event that (a) a private letter ruling is issued to Distribution Provider which holds that any amount paid or the value of any property transferred by Interconnection Customer to Distribution Provider under the terms of this GIA is not subject to federal income taxation, (b) any legislative change or administrative announcement, notice, ruling or other determination makes it reasonably clear to Distribution Provider in good faith that any amount paid or the value of any property transferred by Interconnection Customer to Distribution Provider under the terms of this GIA is not taxable to Distribution Provider, (c) any abatement, appeal, protest, or other contest results in a determination that any payments or transfers made by Interconnection Customer to Distribution Provider are not subject to federal income tax, or (d) if Distribution Provider receives a refund from any taxing authority for any overpayment of tax attributable to any payment or property transfer made by Interconnection Customer to Distribution Provider pursuant to this GIA, Distribution Provider shall promptly refund to Interconnection Customer the following:

(i) any payment made by Interconnection Customer under this Article 5.17 for taxes that is attributable to the amount determined to be non-taxable, together with interest thereon,

(ii) interest on any amounts paid by Interconnection Customer to Distribution Provider for such taxes which Distribution Provider did not

submit to the taxing authority, calculated in accordance with the methodology set forth in FERC's regulations at 18 CFR §35.19a(a)(2)(iii) from the date payment was made by Interconnection Customer to the date Distribution Provider refunds such payment to Interconnection Customer, and

(iii) with respect to any such taxes paid by Distribution Provider, any refund or credit Distribution Provider receives or to which it may be entitled from any Governmental Authority, interest (or that portion thereof attributable to the payment described in clause (i), above) owed to Distribution Provider for such overpayment of taxes (including any reduction in interest otherwise payable by Distribution Provider to any Governmental Authority resulting from an offset or credit); provided, however, that Distribution Provider will remit such amount promptly to Interconnection Customer only after and to the extent that Distribution Provider has received a tax refund, credit or offset from any Governmental Authority for any applicable overpayment of income tax related to Distribution Provider's Interconnection Facilities.

The intent of this provision is to leave the Parties, to the extent practicable, in the event that no taxes are due with respect to any payment for Interconnection Facilities, Distribution Upgrades, and Network Upgrades hereunder, in the same position they would have been in had no such tax payments been made.

5.17.9 Taxes Other Than Income Taxes. Upon the timely request by Interconnection Customer, and at Interconnection Customer's sole expense, Distribution Provider may appeal, protest, seek abatement of, or otherwise contest any tax (other than federal or state income tax) asserted or assessed against Distribution Provider for which Interconnection Customer may be required to reimburse Distribution Provider under the terms of this GIA. Interconnection Customer shall pay to Distribution Provider on a periodic basis, as invoiced by Distribution Provider, Distribution Provider's documented reasonable costs of prosecuting such appeal, protest, abatement, or other contest. Interconnection Customer and Distribution Provider shall cooperate in good faith with respect to any such contest. Unless the payment of such taxes is a prerequisite to an appeal or abatement or cannot be deferred, no amount shall be payable by Interconnection Customer to Distribution Provider for such taxes until they are assessed by a final, non-appealable order by any court or agency of competent jurisdiction. In the event that a tax payment is withheld and ultimately due and payable after appeal, Interconnection Customer will be responsible for all taxes, interest and penalties, other than penalties attributable to any delay caused by Distribution Provider.

5.17.10 Distribution Owners Who Are Not Distribution Providers. If Distribution Provider is not the same entity as the Distribution Owner, then (i) all references in this Article 5.17 to Distribution Provider shall be deemed also to refer to and to include the Distribution Owner, as appropriate, and (ii) this GIA shall not become

effective until such Distribution Owner shall have agreed in writing to assume all of the duties and obligations of Distribution Provider under this Article 5.17 of this GIA.

5.18 Tax Status. Each Party shall cooperate with the other to maintain the other Party's tax status. Nothing in this GIA is intended to adversely affect any Distribution Provider's tax exempt status with respect to the issuance of bonds including, but not limited to, Local Furnishing Bonds.

5.19 Modification.

5.19.1 General. Either Party may undertake modifications to its facilities. If a Party plans to undertake a modification that reasonably may be expected to affect the other Party's facilities, that Party shall provide to the other Party sufficient information regarding such modification so that the other Party may evaluate the potential impact of such modification prior to commencement of the work. Such information shall be deemed to be confidential hereunder and shall include information concerning the timing of such modifications and whether such modifications are expected to interrupt the flow of electricity from the Generating Facility. The Party desiring to perform such work shall provide the relevant drawings, plans, and specifications to the other Party at least ninety (90) Calendar Days in advance of the commencement of the work or such shorter period upon which the Parties may agree, which agreement shall not unreasonably be withheld, conditioned or delayed.

In the case of Generating Facility modifications that do not require Interconnection Customer to submit an Interconnection Request, Distribution Provider shall provide, within thirty (30) Calendar Days (or such other time as the Parties may agree), an estimate of any additional modifications to the Distribution System, Distribution Provider's Interconnection Facilities, Distribution Upgrades, or Network Upgrades necessitated by such Interconnection Customer modification and a good faith estimate of the costs thereof.

5.19.2 Standards. Any additions, modifications, or replacements made to a Party's facilities shall be designed, constructed and operated in accordance with this GIA and Good Utility Practice.

5.19.3 Modification Costs. Interconnection Customer shall not be directly assigned for the costs of any additions, modifications, or replacements that Distribution Provider makes to Distribution Provider's Interconnection Facilities or the Distribution System to facilitate the interconnection of a third party to Distribution Provider's Interconnection Facilities or the Distribution System, or to provide transmission service to a third party under Distribution Provider's Tariff. Interconnection Customer shall be responsible for the costs of any additions, modifications, or replacements to Interconnection Customer's Interconnection Facilities that may be necessary to maintain or upgrade such Interconnection

Customer's Interconnection Facilities consistent with Applicable Laws and Regulations, Applicable Reliability Standards or Good Utility Practice.

Article 6. Testing and Inspection

6.1 Pre-Commercial Operation Date Testing and Modifications. Prior to the Commercial Operation Date, Distribution Provider shall test Distribution Provider's Interconnection Facilities, Distribution Upgrades, and Network Upgrades and Interconnection Customer shall test the Generating Facility and Interconnection Customer's Interconnection Facilities to ensure their safe and reliable operation. Similar testing may be required after initial operation. Each Party shall make any modifications to its facilities that are found to be necessary as a result of such testing. Interconnection Customer shall bear the cost of all such testing and modifications. Interconnection Customer shall generate test energy at the Generating Facility only if it has arranged for the delivery of such test energy.

6.2 Post-Commercial Operation Date Testing and Modifications. Each Party shall at its own expense perform routine inspection and testing of its facilities and equipment in accordance with Good Utility Practice as may be necessary to ensure the continued interconnection of the Generating Facility with the Distribution System in a safe and reliable manner. Each Party shall have the right, upon advance written notice, to require reasonable additional testing of the other Party's facilities, at the requesting Party's expense, as may be in accordance with Good Utility Practice.

6.3 Right to Observe Testing. Each Party shall notify the other Party in advance of its performance of tests of its Interconnection Facilities. The other Party has the right, at its own expense, to observe such testing.

6.4 Right to Inspect. Each Party shall have the right, but shall have no obligation to: (i) observe the other Party's tests and/or inspection of any of its System Protection Facilities and other protective equipment, including Power System Stabilizers; (ii) review the settings of the other Party's System Protection Facilities and other protective equipment; and (iii) review the other Party's maintenance records relative to the Interconnection Facilities, the System Protection Facilities and other protective equipment. A Party may exercise these rights from time to time as it deems necessary upon reasonable notice to the other Party. The exercise or non-exercise by a Party of any such rights shall not be construed as an endorsement or confirmation of any element or condition of the Interconnection Facilities or the System Protection Facilities or other protective equipment or the operation thereof, or as a warranty as to the fitness, safety, desirability, or reliability of same. Any information that a Party obtains through the exercise of any of its rights under this Article 6.4 shall be deemed to be Confidential Information and treated pursuant to Article 22 of this GIA.

Article 7. Metering

7.1 **General.** Each Party shall comply with any Applicable Reliability Standards and the Applicable Reliability Council requirements. The Interconnection Customer shall comply with the provisions of the ISO Tariff regarding metering, including Section 10 of the ISO Tariff. Unless otherwise agreed by the Parties, Distribution Provider may install additional Metering Equipment at the Point of Interconnection prior to any operation of the Generating Facility and shall own, operate, test and maintain such Metering Equipment. Power flows to and from the Generating Facility shall be measured at or, at Distribution Provider's option, compensated to, the Point of Interconnection. Interconnection Customer's access to meter data shall be provided in accordance with the ISO Tariff. Interconnection Customer shall bear all reasonable documented costs associated with the purchase, installation, operation, testing and maintenance of the Metering Equipment.

7.2 **Check Meters.** Interconnection Customer, at its option and expense, may install and operate, on its premises and on its side of the Point of Interconnection, one or more check meters to check the ISO-polled meters or Distribution Provider's meters. Such check meters shall be for check purposes only and shall not be used for the measurement of power flows for purposes of this GIA, except in the case that no other means are available on a temporary basis at the option of the Distribution Provider. The check meters shall be subject at all reasonable times to inspection and examination by Distribution Provider or its designee. The installation, operation and maintenance thereof shall be performed entirely by Interconnection Customer in accordance with Good Utility Practice.

7.3 **Distribution Provider Retail Metering.** Distribution Provider may install retail revenue quality meters and associated equipment, pursuant to the Distribution Provider's applicable retail tariffs.

Article 8. Communications

8.1 **Interconnection Customer Obligations.** Interconnection Customer shall maintain satisfactory operating communications with Distribution Provider's Distribution System dispatcher or representative designated by Distribution Provider. Interconnection Customer shall provide standard voice line, dedicated voice line and facsimile communications at its Generating Facility control room or central dispatch facility through use of either the public telephone system, or a voice communications system that does not rely on the public telephone system. Interconnection Customer shall also provide the dedicated data circuit(s) necessary to provide Interconnection Customer data to Distribution Provider as set forth in Appendix D, Security Arrangements Details. The data circuit(s) shall extend from the Generating Facility to the location(s) specified by Distribution Provider. Any required maintenance of such communications equipment shall be performed by Interconnection Customer. Operational communications shall be activated and maintained under, but not be limited to, the following events: system paralleling or separation, scheduled and unscheduled shutdowns, equipment clearances, and hourly and daily load data.

8.2 **Remote Terminal Unit.** Prior to the Initial Synchronization Date of the Generating Facility, a Remote Terminal Unit, or equivalent data collection and transfer equipment acceptable to the Parties, shall be installed by Interconnection Customer, or by Distribution Provider at Interconnection Customer's expense, to gather accumulated and instantaneous data to be telemetered to the location(s) designated by Distribution Provider through use of a dedicated point-to-point data circuit(s) as indicated in Article 8.1. The communication protocol for the data circuit(s) shall be specified by Distribution Provider. Instantaneous bi-directional analog real power and reactive power flow information must be telemetered directly to the location(s) specified by Distribution Provider.

Each Party will promptly advise the other Party if it detects or otherwise learns of any metering, telemetry or communications equipment errors or malfunctions that require the attention and/or correction by the other Party. The Party owning such equipment shall correct such error or malfunction as soon as reasonably feasible.

8.3 **No Annexation.** Any and all equipment placed on the premises of a Party shall be and remain the property of the Party providing such equipment regardless of the mode and manner of annexation or attachment to real property, unless otherwise mutually agreed by the Parties.

Article 9. Operations

9.1 **General.** Each Party shall comply with Applicable Reliability Standards and the Applicable Reliability Council requirements. Each Party shall provide to the other Party all information that may reasonably be required by the other Party to comply with Applicable Laws and Regulations and Applicable Reliability Standards.

9.2 **Control Area Notification.** At least three months before Initial Synchronization Date, Interconnection Customer shall notify Distribution Provider in writing of the Control Area in which the Generating Facility will be located. If Interconnection Customer elects to locate the Generating Facility in a Control Area other than the Control Area in which the Generating Facility is physically located, and if permitted to do so by the relevant transmission tariffs, all necessary arrangements, including but not limited to those set forth in Article 7 and Article 8 of this GIA, and remote Control Area generator interchange agreements, if applicable, and the appropriate measures under such agreements, shall be executed and implemented prior to the placement of the Generating Facility in the other Control Area.

9.3 **Distribution Provider Obligations.** Distribution Provider shall cause the Distribution System and Distribution Provider's Interconnection Facilities to be operated, maintained and controlled in a safe and reliable manner and in accordance with this GIA. Distribution Provider may provide operating instructions to Interconnection Customer consistent with this GIA and Distribution Provider's operating protocols and procedures as they may change from time to time. Distribution Provider will consider changes to its operating protocols and procedures proposed by Interconnection Customer.

9.4 Interconnection Customer Obligations. Interconnection Customer shall at its own expense operate, maintain and control the Generating Facility and Interconnection Customer's Interconnection Facilities in a safe and reliable manner and in accordance with this GIA. Interconnection Customer shall operate the Generating Facility and Interconnection Customer's Interconnection Facilities in accordance with all applicable requirements of the Control Area of which it is part, as such requirements are set forth in Appendix C, Interconnection Details, of this GIA. Appendix C, Interconnection Details, will be modified to reflect changes to the requirements as they may change from time to time. Either Party may request that the other Party provide copies of the requirements set forth in Appendix C, Interconnection Details, of this GIA.

9.5 Start-Up and Synchronization. Consistent with the Parties' mutually acceptable procedures, Interconnection Customer is responsible for the proper synchronization of the Generating Facility to Distribution Provider's Distribution System.

9.6 Reactive Power.

9.6.1 Power Factor Design Criteria. Interconnection Customer shall design the Generating Facility to maintain a composite power delivery at continuous rated power output at the Point of Interconnection at a power factor within the range of 0.95 leading to 0.95 lagging, unless Distribution Provider has established different requirements that apply to all generators in the Control Area on a comparable basis. The requirements of this paragraph shall not apply to wind generators; rather, the requirements of Appendix G shall apply to wind generators.

9.6.2 Voltage Schedules. Once Interconnection Customer has synchronized the Generating Facility with the Distribution System, Distribution Provider shall require Interconnection Customer to operate the Generating Facility to produce or absorb reactive power within the design limitations of the Generating Facility set forth in Article 9.6.1 (Power Factor Design Criteria). Distribution Provider's voltage schedules shall treat all sources of reactive power interconnected with the Distribution System in an equitable and not unduly discriminatory manner and consistent with the applicable requirements of the ISO Tariff. Distribution Provider shall exercise Reasonable Efforts to provide Interconnection Customer with such schedules at least one (1) day in advance, and may make changes to such schedules as necessary to maintain the reliability of the Distribution System and Transmission System. Interconnection Customer shall operate the Generating Facility to maintain the specified output voltage or power factor at the Point of Interconnection within the design limitations of the Generating Facility set forth in Article 9.6.1 (Power Factor Design Criteria). If Interconnection Customer is unable to maintain the specified voltage or power factor, it shall promptly notify the Distribution Provider and the ISO.

9.6.2.1 Governors and Regulators. Whenever the Generating Facility is operated in parallel with the Distribution System and the speed governors

(if installed on the generating unit pursuant to Good Utility Practice) and voltage regulators are capable of operation, Interconnection Customer shall operate the Generating Facility with its speed governors and voltage regulators in automatic operation. If the Generating Facility's speed governors and voltage regulators are not capable of such automatic operation, Interconnection Customer shall immediately notify Distribution Provider and the ISO, and ensure that the Electric Generating Unit operates as specified in Article 9.6.2 through manual operation and that such Generating Facility's reactive power production or absorption (measured in MVARs) are within the design capability of the Generating Facility's generating unit(s) and steady state stability limits. Interconnection Customer shall not cause its Generating Facility to disconnect automatically or instantaneously from the Distribution System or trip any generating unit comprising the Generating Facility for an under or over frequency condition unless the abnormal frequency condition persists for a time period beyond the limits set forth in ANSI/IEEE Standard C37.106, or such other standard as applied to other generators in the Control Area on a comparable basis.

9.6.3 Payment for Reactive Power. Payment to Interconnection Customer for reactive power that Interconnection Customer provides or absorbs from the Generating Facility when the ISO requests Interconnection Customer to operate its Generating Facility outside the range specified in Article 9.6.1 will be made by the ISO in accordance with the applicable provisions of the ISO Tariff.

9.7 Outages and Interruptions.

9.7.1 Outages.

9.7.1.1 Outage Authority and Coordination. Each Party may in accordance with Good Utility Practice in coordination with the other Party remove from service any of its respective Interconnection Facilities or Network Upgrades that may impact the other Party's facilities as necessary to perform maintenance or testing or to install or replace equipment. Absent an Emergency Condition, the Party scheduling a removal of such facility(ies) from service will use Reasonable Efforts to schedule such removal on a date and time mutually acceptable to the Parties. In all circumstances, any Party planning to remove such facility(ies) from service shall use Reasonable Efforts to minimize the effect on the other Party of such removal.

9.7.1.2 Outage Schedules. Interconnection Customer shall submit its planned maintenance schedules for the Generating Facility to Distribution Provider for a minimum of a rolling twenty-four month period. Interconnection Customer shall update its planned maintenance schedules as necessary. Distribution Provider may request Interconnection Customer to reschedule

its maintenance as necessary to maintain the reliability of the Distribution System and Transmission System. Distribution Provider shall compensate Interconnection Customer for any additional direct costs that Interconnection Customer incurs as a result of having to reschedule maintenance, including any additional overtime, breaking of maintenance contracts or other costs above and beyond the cost Interconnection Customer would have incurred absent Distribution Provider's request to reschedule maintenance. Interconnection Customer will not be eligible to receive compensation, if during the twelve (12) months prior to the date of the scheduled maintenance, Interconnection Customer had modified its schedule of maintenance activities. Distribution Provider shall have no obligation to pay Interconnection Customer any costs the Interconnection Customer incurs as the result of being directed by the ISO to reschedule maintenance.

9.7.1.3 Outage Restoration. If an outage on a Party's Interconnection Facilities or Network Upgrades adversely affects the other Party's operations or facilities, the Party that owns or controls the facility that is out of service shall use Reasonable Efforts to promptly restore such facility(ies) to a normal operating condition consistent with the nature of the outage. The Party that owns or controls the facility that is out of service shall provide the other Party, to the extent such information is known, information on the nature of the Emergency Condition, an estimated time of restoration, and any corrective actions required. Initial verbal notice shall be followed up as soon as practicable with written notice explaining the nature of the outage.

9.7.2 Interruption of Service. If required by Good Utility Practice to do so, Distribution Provider may require Interconnection Customer to interrupt or reduce deliveries of electricity if such delivery of electricity could adversely affect Distribution Provider's ability to perform such activities as are necessary to safely and reliably operate and maintain the Distribution System and Transmission System. The following provisions shall apply to any interruption or reduction permitted under this Article 9.7.2:

9.7.2.1 The interruption or reduction shall continue only for so long as reasonably necessary under Good Utility Practice;

9.7.2.2 Any such interruption or reduction shall be made on an equitable, non-discriminatory basis with respect to all generating facilities directly connected to the Distribution System;

9.7.2.3 When the interruption or reduction must be made under circumstances which do not allow for advance notice, Distribution Provider shall notify Interconnection Customer by telephone as soon as practicable of the reasons for the curtailment, interruption, or reduction, and, if known, its

expected duration. Telephone notification shall be followed by written notification as soon as practicable;

9.7.2.4 Except during the existence of an Emergency Condition, when the interruption or reduction can be scheduled without advance notice, Distribution Provider shall notify Interconnection Customer in advance regarding the timing of such scheduling and further notify Interconnection Customer of the expected duration. Distribution Provider shall coordinate with Interconnection Customer using Good Utility Practice to schedule the interruption or reduction during periods of least impact to Interconnection Customer and Distribution Provider;

9.7.2.5 The Parties shall cooperate and coordinate with each other to the extent necessary in order to restore the Generating Facility, Interconnection Facilities, and the Distribution System and Transmission System to their normal operating state, consistent with system conditions and Good Utility Practice.

9.7.3 Under-Frequency and Over Frequency Conditions. The Distribution System is designed to automatically activate a load-shed program as required by Applicable Reliability Standards and the Applicable Reliability Council in the event of an under-frequency system disturbance. Interconnection Customer shall implement under-frequency and over-frequency relay set points for the Generating Facility as required by Applicable Reliability Standards and the Applicable Reliability Council to ensure "ride through" capability of the Distribution System. Generating Facility response to frequency deviations of pre-determined magnitudes, both under-frequency and over-frequency deviations, shall be studied and coordinated with Distribution Provider in accordance with Good Utility Practice. The term "ride through" as used herein shall mean the ability of a Generating Facility to stay connected to and synchronized with the Distribution System during system disturbances within a range of under-frequency and over-frequency conditions, in accordance with Good Utility Practice.

9.7.4 System Protection and Other Control Requirements.

9.7.4.1 System Protection Facilities. Interconnection Customer shall, at its expense, install, operate and maintain System Protection Facilities as a part of the Generating Facility or Interconnection Customer's Interconnection Facilities. Distribution Provider shall install at Interconnection Customer's expense any System Protection Facilities that may be required on Distribution Provider's Interconnection Facilities, Distribution System, or the Transmission System as a result of the interconnection of the Generating Facility and Interconnection Customer's Interconnection Facilities.

9.7.4.2 Each Party's protection facilities shall be designed and coordinated with other systems in accordance with Applicable Reliability Standards, Applicable Reliability Council criteria, and Good Utility Practice.

9.7.4.3 Each Party shall be responsible for protection of its facilities consistent with Good Utility Practice.

9.7.4.4 Each Party's protective relay design shall incorporate the necessary test switches to perform the tests required in Article 6. The required test switches will be placed such that they allow operation of lockout relays while preventing breaker failure schemes from operating and causing unnecessary breaker operations and/or the tripping of Interconnection Customer's units.

9.7.4.5 Each Party will test, operate and maintain System Protection Facilities in accordance with Good Utility Practice and, if applicable, the requirements of the Distribution Provider's Interconnection Handbook.

9.7.4.6 Prior to the In-Service Date, and again prior to the Commercial Operation Date, each Party or its agent shall perform a complete calibration test and functional trip test of the System Protection Facilities. At intervals suggested by Good Utility Practice, the standards and procedures of the Distribution Provider, including, if applicable, the requirements of the Distribution Provider's Interconnection Handbook, and following any apparent malfunction of the System Protection Facilities, each Party shall perform both calibration and functional trip tests of its System Protection Facilities. These tests do not require the tripping of any in-service generation unit. These tests do, however, require that all protective relays and lockout contacts be activated.

9.7.5 **Requirements for Protection.** In compliance with Good Utility Practice and, if applicable, the requirements of the Distribution Provider's Interconnection Handbook, Interconnection Customer shall provide, install, own, and maintain relays, circuit breakers and all other devices necessary to remove any fault contribution of the Generating Facility to any short circuit occurring on the Distribution System not otherwise isolated by Distribution Provider's equipment, such that the removal of the fault contribution shall be coordinated with the protective requirements of the Distribution System. Such protective equipment shall include, without limitation, a disconnecting device or switch with load-interrupting capability located between the Generating Facility and the Distribution System at a site selected upon mutual agreement (not to be unreasonably withheld, conditioned or delayed) of the Parties. Interconnection Customer shall be responsible for protection of the Generating Facility and Interconnection Customer's other equipment from such conditions as negative sequence currents, over- or under-frequency, sudden load rejection, over- or under-voltage, and generator loss-of-field. Interconnection Customer shall be

solely responsible to disconnect the Generating Facility and Interconnection Customer's other equipment if conditions on the Distribution System could adversely affect the Generating Facility.

9.7.6 Power Quality. Neither Party's facilities shall cause excessive voltage flicker nor introduce excessive distortion to the sinusoidal voltage or current waves as defined by ANSI Standard C84.1-1989, in accordance with IEEE Standard 519, or any applicable superseding electric industry standard or any alternative Applicable Reliability Standard or Applicable Reliability Council standard. In the event of a conflict among ANSI Standard C84.1-1989, or any applicable superseding electric industry standard, or any alternative Applicable Reliability Standard or Applicable Reliability Council standard, the alternative Applicable Reliability Standard or Applicable Reliability Council standard shall control.

9.8 Switching and Tagging Rules. Each Party shall provide the other Party a copy of its switching and tagging rules that are applicable to the other Party's activities. Such switching and tagging rules shall be developed on a non-discriminatory basis. The Parties shall comply with applicable switching and tagging rules, as amended from time to time, in obtaining clearances for work or for switching operations on equipment.

9.9 Use of Interconnection Facilities by Third Parties.

9.9.1 Purpose of Interconnection Facilities. Except as may be required by Applicable Laws and Regulations, or as otherwise agreed to among the Parties, the Interconnection Facilities shall be constructed for the sole purpose of interconnecting the Generating Facility to the Distribution System and shall be used for no other purpose.

9.9.2 Third Party Users. If required by Applicable Laws and Regulations or if the Parties mutually agree, such agreement not to be unreasonably withheld, to allow one or more third parties to use Distribution Provider's Interconnection Facilities, or any part thereof, Interconnection Customer will be entitled to compensation for the capital expenses it incurred in connection with the Interconnection Facilities based upon the pro rata use of the Interconnection Facilities by Distribution Provider, all third party users, and Interconnection Customer, in accordance with Applicable Laws and Regulations or upon some other mutually-agreed upon methodology. In addition, cost responsibility for ongoing costs, including operation and maintenance costs associated with the Interconnection Facilities, will be allocated between Interconnection Customer and any third party users based upon the pro rata use of the Interconnection Facilities by Distribution Provider, all third party users, and Interconnection Customer, in accordance with Applicable Laws and Regulations or upon some other mutually agreed upon methodology. If the issue of such compensation or allocation cannot be resolved through such negotiations, it shall be submitted to FERC for resolution.

9.10 Disturbance Analysis Data Exchange. The Parties will cooperate with one another in the analysis of disturbances to either the Generating Facility or Distribution Provider's Distribution System and Transmission System by gathering and providing access to any information relating to any disturbance, including information from oscillography, protective relay targets, breaker operations and sequence of events records, and any disturbance information required by Good Utility Practice.

Article 10. Maintenance

10.1 Distribution Provider Obligations. Distribution Provider shall maintain the Distribution System, Transmission System and Distribution Provider's Interconnection Facilities in a safe and reliable manner and in accordance with this GIA.

10.2 Interconnection Customer Obligations. Interconnection Customer shall maintain the Generating Facility and Interconnection Customer's Interconnection Facilities in a safe and reliable manner and in accordance with this GIA.

10.3 Coordination. The Parties shall confer regularly to coordinate the planning, scheduling and performance of preventive and corrective maintenance on the Generating Facility and the Interconnection Facilities.

10.4 Secondary Systems. Each Party shall cooperate with the other in the inspection, maintenance, and testing of control or power circuits that operate below 600 volts, AC or DC, including, but not limited to, any hardware, control or protective devices, cables, conductors, electric raceways, secondary equipment panels, transducers, batteries, chargers, and voltage and current transformers that directly affect the operation of a Party's facilities and equipment which may reasonably be expected to impact the other Party. Each Party shall provide advance notice to the other Party before undertaking any work on such circuits, especially on electrical circuits involving circuit breaker trip and close contacts, current transformers, or potential transformers.

10.5 Operating and Maintenance Expenses. Subject to the provisions herein addressing the use of facilities by others, and except for operations and maintenance expenses associated with modifications made for providing interconnection or transmission service to a third party and such third party pays for such expenses, Interconnection Customer shall be responsible for all reasonable expenses including overheads, associated with: (1) owning, operating, maintaining, repairing, and replacing Interconnection Customer's Interconnection Facilities; and (2) operation, maintenance, repair and replacement of Distribution Provider's Interconnection Facilities.

Article 11. Performance Obligation

11.1 Interconnection Customer Interconnection Facilities. Interconnection Customer shall design, procure, construct, install, own and/or control Interconnection Customer Interconnection Facilities described in Appendix A, Interconnection Facilities, Network Upgrades and Distribution Upgrades, at its sole expense.

11.2 Distribution Provider's Interconnection Facilities. Distribution Provider or Distribution Owner shall design, procure, construct, install, own and/or control the Distribution Provider's Interconnection Facilities described in Appendix A, Interconnection Facilities, Network Upgrades and Distribution Upgrades, at the sole expense of the Interconnection Customer.

11.3 Network Upgrades and Distribution Upgrades. Distribution Provider or Distribution Owner shall design, procure, construct, install, and own the Network Upgrades and Distribution Upgrades described in Appendix A, Interconnection Facilities, Network Upgrades and Distribution Upgrades. The Interconnection Customer shall be responsible for all costs related to Distribution Upgrades. Unless Distribution Provider or Distribution Owner elects to fund the capital for the Distribution Upgrades and Network Upgrades, they shall be funded by Interconnection Customer.

11.4 Transmission Credits.

11.4.1 Repayment of Amounts Advanced for Network Upgrades. Interconnection Customer shall be entitled to a cash repayment, equal to the total amount paid to Distribution Provider and Affected System Operator, if any, for the Network Upgrades, including any tax gross-up or other tax-related payments associated with Network Upgrades, and not refunded to Interconnection Customer pursuant to Article 5.17.8 or otherwise, to be paid to Interconnection Customer on a dollar-for-dollar basis for the non-usage sensitive portion of transmission charges, as payments are made under Distribution Provider's Tariff and Affected System's Tariff for transmission services with respect to the Generating Facility. Any repayment shall include interest calculated in accordance with the methodology set forth in FERC's regulations at 18 C.F.R. §35.19a(a)(2)(iii) from the date of any payment for Network Upgrades through the date on which the Interconnection Customer receives a repayment of such payment pursuant to this subparagraph. Interconnection Customer may assign such repayment rights to any person.

Notwithstanding the foregoing, Interconnection Customer, Distribution Provider, and Affected System Operator may adopt any alternative payment schedule that is mutually agreeable so long as Distribution Provider and Affected System Operator take one of the following actions no later than five years from the Commercial Operation Date: (1) return to Interconnection Customer any amounts advanced for Network Upgrades not previously repaid, or (2) declare in writing that Distribution Provider or Affected System Operator will continue to provide payments to Interconnection Customer on a dollar-for-dollar basis for the non-usage sensitive portion of transmission charges, or develop an alternative schedule that is mutually agreeable and provides for the return of all amounts advanced for Network Upgrades not previously repaid; however, full reimbursement shall not extend beyond twenty (20) years from the Commercial Operation Date.

If the Generating Facility fails to achieve commercial operation, but it or another Generating Facility is later constructed and makes use of the Network Upgrades, Distribution Provider and Affected System Operator shall at that time reimburse Interconnection Customer for the amounts advanced for the Network Upgrades. Before any such reimbursement can occur, the Interconnection Customer, or the entity that ultimately constructs the Generating Facility, if different, is responsible for identifying the entity to which reimbursement must be made.

11.4.2 Special Provisions for Affected Systems. Unless Distribution Provider provides, under the GIA, for the repayment of amounts advanced to Affected System Operator for Network Upgrades, Interconnection Customer and Affected System Operator shall enter into an agreement that provides for such repayment. The agreement shall specify the terms governing payments to be made by Interconnection Customer to the Affected System Operator as well as the repayment by the Affected System Operator.

11.4.3 Notwithstanding any other provision of this GIA, nothing herein shall be construed as relinquishing or foreclosing any rights, including but not limited to firm transmission rights, capacity rights, transmission congestion rights, or transmission credits, that Interconnection Customer, shall be entitled to, now or in the future under any other agreement or tariff as a result of, or otherwise associated with, the transmission capacity, if any, created by the Network Upgrades, including the right to obtain cash reimbursements or transmission credits for transmission service that is not associated with the Generating Facility.

11.5 Provision of Interconnection Financial Security. The Interconnection Customer is obligated to provide all necessary Interconnection Financial Security required under Section 5.9 of the GIP in a manner acceptable under Section 5.9 of the GIP.

Article 12. Invoice

12.1 General. Each Party shall submit to the other Party, on a monthly basis, invoices of amounts due for the preceding month. Each invoice shall state the month to which the invoice applies and fully describe the services and equipment provided. The Parties may discharge mutual debts and payment obligations due and owing to each other on the same date through netting, in which case all amounts a Party owes to the other Party under this GIA, including interest payments or credits, shall be netted so that only the net amount remaining due shall be paid by the owing Party.

12.2 Final Invoice. Within twelve (12) months after completion of the construction of Distribution Provider's Interconnection Facilities, Distribution Upgrades, and the Network Upgrades, Distribution Provider shall provide an invoice of the final cost of the construction of Distribution Provider's Interconnection Facilities, Distribution Upgrades, and the Network Upgrades and shall set forth such costs in sufficient detail to enable Interconnection Customer to compare the actual costs with the estimates and to ascertain

deviations, if any, from the cost estimates. Distribution Provider shall refund to Interconnection Customer any amount by which the actual payment by Interconnection Customer for estimated costs exceeds the actual costs of construction within thirty (30) Calendar Days of the issuance of such final construction invoice.

12.3 **Payment.** Invoices shall be rendered to the paying Party at the address specified in Appendix F. The Party receiving the invoice shall pay the invoice within thirty (30) Calendar Days of receipt. All payments shall be made in immediately available funds payable to the other Party, or by wire transfer to a bank named and account designated by the invoicing Party. Payment of invoices by either Party will not constitute a waiver of any rights or claims either Party may have under this GIA.

12.4 **Disputes.** In the event of a billing dispute between Distribution Provider and Interconnection Customer, Distribution Provider shall continue to provide Interconnection Service under this GIA as long as Interconnection Customer: (i) continues to make all payments not in dispute; and (ii) pays to Distribution Provider or into an independent escrow account the portion of the invoice in dispute, pending resolution of such dispute. If Interconnection Customer fails to meet these two requirements for continuation of service, then Distribution Provider may provide notice to Interconnection Customer of a Default pursuant to Article 17. Within thirty (30) Calendar Days after the resolution of the dispute, the Party that owes money to the other Party shall pay the amount due with interest calculated in accord with the methodology set forth in FERC's regulations at 18 CFR § 35.19a(a)(2)(iii).

Article 13. Emergencies

13.1 **Definition.** "Emergency Condition" shall mean a condition or situation: (i) that in the judgment of the Party making the claim is imminently likely to endanger life or property; or (ii) that, in the case of Distribution Provider, is imminently likely (as determined in a non-discriminatory manner) to cause a material adverse effect on the security of, or damage to the Distribution System, Distribution Provider's Interconnection Facilities or the Transmission Systems of others to which the Distribution System is directly connected; or (iii) that, in the case of Interconnection Customer, is imminently likely (as determined in a non-discriminatory manner) to cause a material adverse effect on the security of, or damage to, the Generating Facility or Interconnection Customer's Interconnection Facilities' System restoration and black start shall be considered Emergency Conditions; provided, that Interconnection Customer is not obligated by this GIA to possess black start capability.

13.2 **Obligations.** Each Party shall comply with the Emergency Condition procedures of the ISO, NERC, the Applicable Reliability Council, Applicable Reliability Standards, Applicable Laws and Regulations, and any emergency procedures set forth in this GIA.

13.3 **Notice.** Distribution Provider shall notify Interconnection Customer promptly when it becomes aware of an Emergency Condition that affects Distribution Provider's Interconnection Facilities, Distribution System or the Transmission System that may

reasonably be expected to affect Interconnection Customer's operation of the Generating Facility or Interconnection Customer's Interconnection Facilities. Interconnection Customer shall notify Distribution Provider promptly when it becomes aware of an Emergency Condition that affects the Generating Facility or Interconnection Customer's Interconnection Facilities that may reasonably be expected to affect the Distribution System, Transmission System or Distribution Provider's Interconnection Facilities. To the extent information is known, the notification shall describe the Emergency Condition, the extent of the damage or deficiency, the expected effect on the operation of Interconnection Customer's or Distribution Provider's facilities and operations, its anticipated duration and the corrective action taken and/or to be taken. The initial notice shall be followed as soon as practicable with written notice.

13.4 Immediate Action. Unless, in Interconnection Customer's reasonable judgment, immediate action is required, Interconnection Customer shall obtain the consent of Distribution Provider, such consent to not be unreasonably withheld, prior to performing any manual switching operations at the Generating Facility or Interconnection Customer's Interconnection Facilities in response to an Emergency Condition either declared by Distribution Provider or otherwise regarding the Distribution System.

13.5 Distribution Provider Authority.

13.5.1 General. Distribution Provider may take whatever actions or inactions with regard to the Distribution System and Transmission System or Distribution Provider's Interconnection Facilities it deems necessary during an Emergency Condition in order to (i) preserve public health and safety, (ii) preserve the reliability of the Distribution System and Transmission System or Distribution Provider's Interconnection Facilities, (iii) limit or prevent damage, and (iv) expedite restoration of service.

Distribution Provider shall use Reasonable Efforts to minimize the effect of such actions or inactions on the Generating Facility or Interconnection Customer's Interconnection Facilities. Distribution Provider may, on the basis of technical considerations, require the Generating Facility to mitigate an Emergency Condition by taking actions necessary and limited in scope to remedy the Emergency Condition, including, but not limited to, directing Interconnection Customer to shut-down, start-up, increase or decrease the real or reactive power output of the Generating Facility; implementing a reduction or disconnection pursuant to Article 13.5.2; directing Interconnection Customer to assist with blackstart (if available) or restoration efforts; or altering the outage schedules of the Generating Facility and Interconnection Customer's Interconnection Facilities. Interconnection Customer shall comply with all of Distribution Provider's operating instructions concerning Generating Facility real power and reactive power output within the manufacturer's design limitations of the Generating Facility's equipment that is in service and physically available for operation at the time, in compliance with Applicable Laws and Regulations.

13.5.2 Reduction and Disconnection. Distribution Provider may reduce Interconnection Service or disconnect the Generating Facility or Interconnection Customer's Interconnection Facilities, when such, reduction or disconnection is necessary under Good Utility Practice due to Emergency Conditions. These rights are separate and distinct from any right of curtailment of the ISO pursuant to the ISO Tariff. When Distribution Provider can schedule the reduction or disconnection in advance, Distribution Provider shall notify Interconnection Customer of the reasons, timing and expected duration of the reduction or disconnection. Distribution Provider shall coordinate with Interconnection Customer using Good Utility Practice to schedule the reduction or disconnection during periods of least impact to Interconnection Customer and Distribution Provider. Any reduction or disconnection shall continue only for so long as reasonably necessary under Good Utility Practice. The Parties shall cooperate with each other to restore the Generating Facility, the Interconnection Facilities, and the Distribution System to their normal operating state as soon as practicable consistent with Good Utility Practice.

13.6 Interconnection Customer Authority. Consistent with Good Utility Practice and the GIA and the GIP, Interconnection Customer may take actions or inactions with regard to the Generating Facility or Interconnection Customer's Interconnection Facilities during an Emergency Condition in order to (i) preserve public health and safety, (ii) preserve the reliability of the Generating Facility or Interconnection Customer's Interconnection Facilities, (iii) limit or prevent damage, and (iv) expedite restoration of service. Interconnection Customer shall use Reasonable Efforts to minimize the effect of such actions or inactions on the Distribution System and Distribution Provider's Interconnection Facilities. Distribution Provider shall use Reasonable Efforts to assist Interconnection Customer in such actions.

13.7 Limited Liability. Except as otherwise provided in Article 11.6.1 of this GIA, neither Party shall be liable to the other for any action it takes in responding to an Emergency Condition so long as such action is made in good faith and is consistent with Good Utility Practice.

Article 14. Regulatory Requirements and Governing Law

14.1 Regulatory Requirements. Each Party's obligations under this GIA shall be subject to its receipt of any required approval or certificate from one or more Governmental Authorities in the form and substance satisfactory to the applying Party, or the Party making any required filings with, or providing notice to, such Governmental Authorities, and the expiration of any time period associated therewith. Each Party shall in good faith seek and use its Reasonable Efforts to obtain such other approvals. Nothing in this GIA shall require Interconnection Customer to take any action that could result in its inability to obtain, or its loss of, status or exemption under the Federal Power Act, the Public Utility Holding Company Act of 1935, as amended, or the Public Utility Regulatory Policies Act of 1978.

14.2 Governing Law.

14.2.1 The validity, interpretation and performance of this GIA and each of its provisions shall be governed by the laws of the state where the Point of Interconnection is located, without regard to its conflicts of law principles.

14.2.2 This GIA is subject to all Applicable Laws and Regulations.

14.2.3 Each Party expressly reserves the right to seek changes in, appeal, or otherwise contest any laws, orders, rules, or regulations of a Governmental Authority.

Article 15. Notices.

15.1 General. Unless otherwise provided in this GIA, any notice, demand or request required or permitted to be given by either Party to the other and any instrument required or permitted to be tendered or delivered by either Party in writing to the other shall be effective when delivered and may be so given, tendered or delivered, by recognized national courier, or by depositing the same with the United States Postal Service with postage prepaid, for delivery by certified or registered mail, addressed to the Party, or personally delivered to the Party, at the address set out in Appendix F, Addresses for Delivery of Notices and Billings.

Either Party may change the notice information in this GIA by giving five (5) Business Days written notice prior to the effective date of the change.

15.2 Billings and Payments. Billings and payments shall be sent to the addresses set out in Appendix F.

15.3 Alternative Forms of Notice. Any notice or request required or permitted to be given by a Party to the other and not required by this Agreement to be given in writing may be so given by telephone, facsimile or email to the telephone numbers and email addresses set out in Appendix F.

15.4 Operations and Maintenance Notice. Each Party shall notify the other Party in writing of the identity of the person(s) that it designates as the point(s) of contact with respect to the implementation of Articles 9 and 10.

Article 16. Uncontrollable Force

16.1 Uncontrollable Force.

16.1.1 Economic hardship is not considered an Uncontrollable Force event.

16.1.2 Neither Party shall be considered to be in Default with respect to any obligation hereunder, (including obligations under Article 4), other than the obligation to pay money when due, if prevented from fulfilling such obligation by Uncontrollable

Force. A Party unable to fulfill any obligation hereunder (other than an obligation to pay money when due) by reason of an Uncontrollable Force shall give notice and the full particulars of such Uncontrollable Force to the other Party in writing or by telephone as soon as reasonably possible after the occurrence of the cause relied upon. Telephone notices given pursuant to this article shall be confirmed in writing as soon as reasonably possible and shall specifically state full particulars of the Uncontrollable Force, the time and date when the Uncontrollable Force occurred and when the Uncontrollable Force is reasonably expected to cease. The Party affected shall exercise due diligence to remove such disability with reasonable dispatch, but shall not be required to accede or agree to any provision not satisfactory to it in order to settle and terminate a strike or other labor disturbance.

Article 17. Default

17.1 Default

17.1.1 General. No Default shall exist where such failure to discharge an obligation (other than the payment of money) is the result of an Uncontrollable Force as defined in this GIA or the result of an act of omission of the other Party. Upon a Breach, the non-breaching Party shall give written notice of such Breach to the breaching Party. Except as provided in Article 17.1.2, the breaching Party shall have thirty (30) Calendar Days from receipt of the Default notice within which to cure such Breach; provided however, if such Breach is not capable of cure within thirty (30) Calendar Days, the breaching Party shall commence such cure within thirty (30) Calendar Days after notice and continuously and diligently complete such cure within ninety (90) Calendar Days from receipt of the Default notice; and, if cured within such time, the Breach specified in such notice shall cease to exist.

17.1.2 Right to Terminate. If a Breach is not cured as provided in this article, or if a Breach is not capable of being cured within the period provided for herein, the non-breaching Party shall have the right to declare a Default and terminate this GIA by written notice at any time until cure occurs, and be relieved of any further obligation hereunder and, whether or not that Party terminates this GIA, to recover from the breaching Party all amounts due hereunder, plus all other damages and remedies to which it is entitled at law or in equity. The provisions of this article will survive termination of this GIA.

Article 18. Indemnity, Consequential Damages and Insurance

18.1 Indemnity. The Parties shall at all times indemnify, defend, and hold the other Party harmless from, any and all damages, losses, claims, including claims and actions relating to injury to or death of any person or damage to property, demand, suits, recoveries, costs and expenses, court costs, attorney fees, and all other obligations by or to third parties, arising out of or resulting from the other Party's action or inactions of its obligations

under this GIA on behalf of the Indemnifying Party, except in cases of gross negligence or intentional wrongdoing by the Indemnified Party.

18.1.1 Indemnified Person. If an Indemnified Person is entitled to indemnification under this Article 18 as a result of a claim by a third party, and the Indemnifying Party fails, after notice and reasonable opportunity to proceed under Article 18.1, to assume the defense of such claim, such Indemnified Person may at the expense of the Indemnifying Party contest, settle or consent to the entry of any judgment with respect to, or pay in full, such claim.

18.1.2 Indemnifying Party. If an Indemnifying Party is obligated to indemnify and hold any Indemnified Person harmless under this Article 18, the amount owing to the Indemnified Person shall be the amount of such Indemnified Person's actual Loss, net of any insurance or other recovery.

18.1.3 Indemnity Procedures. Promptly after receipt by an Indemnified Person of any claim or notice of the commencement of any action or administrative or legal proceeding or investigation as to which the indemnity provided for in Article 18.1 may apply, the Indemnified Person shall notify the Indemnifying Party of such fact. Any failure of or delay in such notification shall not affect a Party's indemnification obligation unless such failure or delay is materially prejudicial to the Indemnifying Party.

The Indemnifying Party shall have the right to assume the defense thereof with counsel designated by such Indemnifying Party and reasonably satisfactory to the Indemnified Person. If the defendants in any such action include one or more Indemnified Persons and the Indemnifying Party and if the Indemnified Person reasonably concludes that there may be legal defenses available to it and/or other Indemnified Persons which are different from or additional to those available to the Indemnifying Party, the Indemnified Person shall have the right to select separate counsel to assert such legal defenses and to otherwise participate in the defense of such action on its own behalf. In such instances, the Indemnifying Party shall only be required to pay the fees and expenses of one additional attorney to represent an Indemnified Person or Indemnified Persons having such differing or additional legal defenses.

The Indemnified Person shall be entitled, at its expense, to participate in any such action, suit or proceeding, the defense of which has been assumed by the Indemnifying Party. Notwithstanding the foregoing, the Indemnifying Party (i) shall not be entitled to assume and control the defense of any such action, suit or proceedings if and to the extent that, in the opinion of the Indemnified Person and its counsel, such action, suit or proceeding involves the potential imposition of criminal liability on the Indemnified Person, or there exists a conflict or adversity of interest between the Indemnified Person and the Indemnifying Party, in such event the Indemnifying Party shall pay the reasonable expenses of the Indemnified Person, and (ii) shall not settle or consent to the entry of any

judgment in any action, suit or proceeding without the consent of the Indemnified Person, which shall not be reasonably withheld, conditioned or delayed.

18.2 **Consequential Damages.** Other than the Liquidated Damages heretofore described, in no event shall either Party be liable under any provision of this GIA for any losses, damages, costs or expenses for any special, indirect, incidental, consequential, or punitive damages, including but not limited to loss of profit or revenue, loss of the use of equipment, cost of capital, cost of temporary equipment or services, whether based in whole or in part in contract, in tort, including negligence, strict liability, or any other theory of liability; provided, however, that damages for which a Party may be liable to the other Party under another agreement will not be considered to be special, indirect, incidental, or consequential damages hereunder.

18.3 **Insurance.** Each party shall, at its own expense, maintain in force throughout the period of this GIA, and until released by the other Party, the following minimum insurance coverages, with insurers authorized to do business in the state where the Point of Interconnection is located:

18.3.1 Employers' Liability and Workers' Compensation Insurance providing statutory benefits in accordance with the laws and regulations of the state in which the Point of Interconnection is located.

18.3.2 Commercial General Liability Insurance including premises and operations, personal injury, broad form property damage, broad form blanket contractual liability coverage (including coverage for the contractual indemnification) products and completed operations coverage, coverage for explosion, collapse and underground hazards, independent contractors coverage, coverage for pollution to the extent normally available and punitive damages to the extent normally available and a cross liability endorsement, with minimum limits of One Million Dollars ($1,000,000) per occurrence/One Million Dollars ($1,000,000) aggregate combined single limit for personal injury, bodily injury, including death and property damage.

18.3.3 Comprehensive Automobile Liability Insurance for coverage of owned and non-owned and hired vehicles, trailers or semi-trailers designed for travel on public roads, with a minimum, combined single limit of One Million Dollars ($1,000,000) per occurrence for bodily injury, including death, and property damage.

18.3.4 Excess Public Liability Insurance over and above the Employers' Liability Commercial General Liability and Comprehensive Automobile Liability Insurance coverage, with a minimum combined single limit of Twenty Million Dollars ($20,000,000) per occurrence/Twenty Million Dollars ($20,000,000) aggregate.

18.3.5 The Commercial General Liability Insurance, Comprehensive Automobile Insurance and Excess Public Liability Insurance policies shall name the other Party, its parent, associated and Affiliate companies and their respective directors, officers, agents, servants and employees ("Other Party Group") as additional insured. All policies shall contain provisions whereby the insurers waive all rights of subrogation in accordance with the provisions of this GIA against the Other Party Group and provide thirty (30) Calendar Days advance written notice to the Other Party Group prior to anniversary date of cancellation or any material change in coverage or condition.

18.3.6 The Commercial General Liability Insurance, Comprehensive Automobile Liability Insurance and Excess Public Liability Insurance policies shall contain provisions that specify that the policies are primary and shall apply to such extent without consideration for other policies separately carried and shall state that each insured is provided coverage as though a separate policy had been issued to each, except the insurer's liability shall not be increased beyond the amount for which the insurer would have been liable had only one insured been covered. Each Party shall be responsible for its respective deductibles or retentions.

18.3.7 The Commercial General Liability Insurance, Comprehensive Automobile Liability Insurance and Excess Public Liability Insurance policies, if written on a Claims First Made Basis, shall be maintained in full force and effect for two (2) years after termination of this GIA, which coverage may be in the form of tail coverage or extended reporting period coverage if agreed by the Parties.

18.3.8 The requirements contained herein as to the types and limits of all insurance to be maintained by the Parties are not intended to and shall not in any manner, limit or qualify the liabilities and obligations assumed by the Parties under this GIA.

18.3.9 Within ten (10) days following execution of this GIA, and as soon as practicable after the end of each fiscal year or at the renewal of the insurance policy and in any event within ninety (90) days thereafter, each Party shall provide certification of all insurance required in this GIA, executed by each insurer or by an authorized representative of each insurer.

18.3.10 Notwithstanding the foregoing, each Party may self-insure to meet the minimum insurance requirements of Articles 18.3.2 through 18.3.8 to the extent it maintains a self-insurance program; provided that, such Party's senior secured debt is rated at investment grade or better by Standard & Poor's and that its self-insurance program meets the minimum insurance requirements of Articles 18.3.2 through 18.3.8. For any period of time that a Party's senior secured debt is unrated by Standard & Poor's or is rated at less than investment grade by Standard & Poor's, such Party shall comply with the insurance requirements applicable to it under Articles 18.3.2 through 18.3.9. In the event that a Party is permitted to self-insure pursuant to this article, it shall notify the other Party that it meets the requirements

to self-insure and that its self-insurance program meets the minimum insurance requirements in a manner consistent with that specified in Article 18.3.9.

18.3.11 The Parties agree to report to each other in writing as soon as practical all accidents or occurrences resulting in injuries to any person, including death, and any property damage arising out of this GIA.

Article 19. Assignment

19.1 Assignment. This GIA may be assigned by either Party only with the written consent of the other; provided that either Party may assign this GIA without the consent of the other Party to any Affiliate of the assigning Party with an equal or greater credit rating and with the legal authority and operational ability to satisfy the obligations of the assigning Party under this GIA; and provided further that Interconnection Customer shall have the right to assign this GIA, without the consent of Distribution Provider, for collateral security purposes to aid in providing financing for the Generating Facility, provided that Interconnection Customer will promptly notify Distribution Provider of any such assignment. Any financing arrangement entered into by Interconnection Customer pursuant to this article will provide that prior to or upon the exercise of the secured party's, trustee's or mortgagee's assignment rights pursuant to said arrangement, the secured creditor, the trustee or mortgagee will notify Distribution Provider of the date and particulars of any such exercise of assignment right(s), including providing the Distribution Provider with proof that it meets the requirements of Articles 11.5 and 18.3. Any attempted assignment that violates this article is void and ineffective. Any assignment under this GIA shall not relieve a Party of its obligations, nor shall a Party's obligations be enlarged, in whole or in part, by reason thereof. Where required, consent to assignment will not be unreasonably withheld, conditioned or delayed.

Article 20. Severability

20.1 Severability. If any provision in this GIA is finally determined to be invalid, void or unenforceable by any court or other Governmental Authority having jurisdiction, such determination shall not invalidate, void or make unenforceable any other provision, agreement or covenant of this GIA; provided that if Interconnection Customer (or any third party, but only if such third party is not acting at the direction of Distribution Provider) seeks and obtains such a final determination with respect to any provision of the Alternate Option (Article 5.1.2), or the Negotiated Option (Article 5.1.4), then none of these provisions shall thereafter have any force or effect and the Parties' rights and obligations shall be governed solely by the Standard Option (Article 5.1.1).

Article 21. Comparability

21.1 Comparability. The Parties will comply with all applicable comparability and code of conduct laws, rules and regulations, as amended from time to time.

Article 22. Confidentiality

22.1 Confidentiality. Confidential Information shall include, without limitation, all information relating to a Party's technology, research and development, business affairs, and pricing, and any information supplied by either of the Parties to the other prior to the execution of this GIA.

Information is Confidential Information only if it is clearly designated or marked in writing as confidential on the face of the document, or, if the information is conveyed orally or by inspection, if the Party providing the information orally informs the Party receiving the information that the information is confidential.

If requested by either Party, the other Party shall provide in writing, the basis for asserting that the information referred to in this Article 22 warrants confidential treatment, and the requesting Party may disclose such writing to the appropriate Governmental Authority. Each Party shall be responsible for the costs associated with affording confidential treatment to its information.

22.1.1 Term. During the term of this GIA, and for a period of three (3) years after the expiration or termination of this GIA, except as otherwise provided in this Article 22, each Party shall hold in confidence and shall not disclose to any person Confidential Information.

22.1.2 Scope. Confidential Information shall not include information that the receiving Party can demonstrate: (1) is generally available to the public other than as a result of a disclosure by the receiving Party; (2) was in the lawful possession of the receiving Party on a non-confidential basis before receiving it from the disclosing Party; (3) was supplied to the receiving Party without restriction by a third party, who, to the knowledge of the receiving Party after due inquiry, was under no obligation to the disclosing Party to keep such information confidential; (4) was independently developed by the receiving Party without reference to Confidential Information of the disclosing Party; (5) is, or becomes, publicly known, through no wrongful act or omission of the receiving Party or Breach of this GIA; or (6) is required, in accordance with Article 22.1.7 of the GIA, Order of Disclosure, to be disclosed by any Governmental Authority or is otherwise required to be disclosed by law or subpoena, or is necessary in any legal proceeding establishing rights and obligations under this GIA. Information designated as Confidential Information will no longer be deemed confidential if the Party that designated the information as confidential notifies the other Party that it no longer is confidential.

22.1.3 Release of Confidential Information. Neither Party shall release or disclose Confidential Information to any other person, except to its Affiliates (limited by the Standards of Conduct requirements), subcontractors, employees, consultants, or to parties who may be or considering providing financing to or equity participation with Interconnection Customer, or to potential purchasers or

assignees of Interconnection Customer, on a need-to-know basis in connection with this GIA, unless such person has first been advised of the confidentiality provisions of this Article 22 and has agreed to comply with such provisions. Notwithstanding the foregoing, a Party providing Confidential Information to any person shall remain primarily responsible for any release of Confidential Information in contravention of this Article 22.

22.1.4 Rights. Each Party retains all rights, title, and interest in the Confidential Information that each Party discloses to the other Party. The disclosure by each Party to the other Party of Confidential Information shall not be deemed a waiver by either Party or any other person or entity of the right to protect the Confidential Information from public disclosure.

22.1.5 No Warranties. By providing Confidential Information, neither Party makes any warranties or representations as to its accuracy or completeness. In addition, by supplying Confidential Information, neither Party obligates itself to provide any particular information or Confidential Information to the other Party nor to enter into any further agreements or proceed with any other relationship or joint venture.

22.1.6 Standard of Care. Each Party shall use at least the same standard of care to protect Confidential Information it receives as it uses to protect its own Confidential Information from unauthorized disclosure, publication or dissemination. Each Party may use Confidential Information solely to fulfill its obligations to the other Party under this GIA or its regulatory requirements.

22.1.7 Order of Disclosure. If a court or a Government Authority or entity with the right, power, and apparent authority to do so requests or requires either Party, by subpoena, oral deposition, interrogatories, requests for production of documents, administrative order, or otherwise, to disclose Confidential Information, that Party shall provide the other Party with prompt notice of such request(s) or requirement(s) so that the other Party may seek an appropriate protective order or waive compliance with the terms of this GIA. Notwithstanding the absence of a protective order or waiver, the Party may disclose such Confidential Information which, in the opinion of its counsel, the Party is legally compelled to disclose. Each Party will use Reasonable Efforts to obtain reliable assurance that confidential treatment will be accorded any Confidential Information so furnished.

22.1.8 Termination of Agreement. Upon termination of this GIA for any reason, each Party shall, within ten (10) Calendar Days of receipt of a written request from the other Party, use Reasonable Efforts to destroy, erase, or delete (with such destruction, erasure, and deletion certified in writing to the other Party) or return to the other Party, without retaining copies thereof, any and all written or electronic Confidential Information received from the other Party.

22.1.9 Remedies. The Parties agree that monetary damages would be inadequate to compensate a Party for the other Party's Breach of its obligations under this Article 22. Each Party accordingly agrees that the other Party shall be entitled to equitable relief, by way of injunction or otherwise, if the first Party Breaches or threatens to Breach its obligations under this Article 22, which equitable relief shall be granted without bond or proof of damages, and the receiving Party shall not plead in defense that there would be an adequate remedy at law. Such remedy shall not be deemed an exclusive remedy for the Breach of this Article 22, but shall be in addition to all other remedies available at law or in equity. The Parties further acknowledge and agree that the covenants contained herein are necessary for the protection of legitimate business interests and are reasonable in scope. No Party, however, shall be liable for indirect, incidental, or consequential or punitive damages of any nature or kind resulting from or arising in connection with this Article 22.

22.1.10 Disclosure to FERC, its Staff, or a State. Notwithstanding anything in this Article 22 to the contrary, and pursuant to 18 CFR section 1b.20, if FERC or its staff, during the course of an investigation or otherwise, requests information from one of the Parties that is otherwise required to be maintained in confidence pursuant to this GIA, the Party shall provide the requested information to FERC or its staff, within the time provided for in the request for information. In providing the information to FERC or its staff, the Party must, consistent with 18 CFR section 388.112, request that the information be treated as confidential and non-public by FERC and its staff and that the information be withheld from public disclosure. Parties are prohibited from notifying the other Party to this GIA prior to the release of the Confidential Information to FERC or its staff. The Party shall notify the other Party to the GIA when it is notified by FERC or its staff that a request to release Confidential Information has been received by FERC, at which time either of the Parties may respond before such information would be made public, pursuant to 18 CFR section 388.112. Requests from a state regulatory body conducting a confidential investigation shall be treated in a similar manner if consistent with the applicable state rules and regulations.

22.1.11 Subject to the exception in Article 22.1.10, any information that a Party claims is competitively sensitive, commercial or financial information under this GIA ("Confidential Information") shall not be disclosed by the other Party to any person not employed or retained by the other Party, except to the extent disclosure is (i) required by law; (ii) reasonably deemed by the disclosing Party to be required to be disclosed in connection with a dispute between or among the Parties, or the defense of litigation or dispute; (iii) otherwise permitted by consent of the other Party, such consent not to be unreasonably withheld; or (iv) necessary to fulfill its obligations under this GIA or as a transmission service provider or a Control Area operator including disclosing the Confidential Information to an RTO or ISO or to a regional or national reliability organization. The Party asserting confidentiality shall notify the other Party in writing of the information it claims is confidential. Prior to any disclosures of the other Party's Confidential

Information under this subparagraph, or if any third party or Governmental Authority makes any request or demand for any of the information described in this subparagraph, the disclosing Party agrees to promptly notify the other Party in writing and agrees to assert confidentiality and cooperate with the other Party in seeking to protect the Confidential Information from public disclosure by confidentiality agreement, protective order or other reasonable measures.

Article 23. Environmental Releases

23.1 Each Party shall notify the other Party, first orally and then in writing, of the release of any Hazardous Substances, any asbestos or lead abatement activities, or any type of remediation activities related to the Generating Facility or the Interconnection Facilities, each of which may reasonably be expected to affect the other Party. The notifying Party shall: (i) provide the notice as soon as practicable, provided such Party makes a good faith effort to provide the notice no later than twenty-four hours after such Party becomes aware of the occurrence; and (ii) promptly furnish to the other Party copies of any publicly available reports filed with any Governmental Authorities addressing such events.

Article 24. Information Requirements

24.1 **Information Acquisition.** Distribution Provider and Interconnection Customer shall submit specific information regarding the electrical characteristics of their respective facilities to each other as described below and in accordance with Applicable Reliability Standards.

24.2 **Information Submission by Distribution Provider.** The initial information submission by Distribution Provider shall occur no later than one hundred eighty (180) Calendar Days prior to Trial Operation and shall include Distribution System and Transmission System information necessary to allow Interconnection Customer to select equipment and meet any system protection and stability requirements, unless otherwise agreed to by the Parties. On a monthly basis Distribution Provider shall provide Interconnection Customer a status report on the construction and installation of Distribution Provider's Interconnection Facilities, Distribution Upgrades, and Network Upgrades, including, but not limited to, the following information: (1) progress to date; (2) a description of the activities since the last report; (3) a description of the action items for the next period; and (4) the delivery status of equipment ordered.

24.3 **Updated Information Submission by Interconnection Customer.** The updated information submission by Interconnection Customer, including manufacturer information, shall occur no later than one hundred eighty (180) Calendar Days prior to the Trial Operation. Interconnection Customer shall submit a completed copy of the Generating Facility data requirements contained in Appendix 1 to the GIP. It shall also include any additional information provided to Distribution Provider for the Feasibility and Facilities Study. Information in this submission shall be the most current Generating Facility design or expected performance data. Information submitted for stability models

shall be compatible with Distribution Provider standard models. If there is no compatible model, Interconnection Customer will work with a consultant mutually agreed to by the Parties to develop and supply a standard model and associated information.

If Interconnection Customer's data is materially different from what was originally provided to Distribution Provider pursuant to the Interconnection Study Agreement between Distribution Provider and Interconnection Customer, then Distribution Provider will conduct appropriate studies to determine the impact on Distribution Provider Distribution System and Transmission System based on the actual data submitted pursuant to this Article 24.3. The Interconnection Customer shall not begin Trial Operation until such studies are completed.

24.4 Information Supplementation. Prior to the Trial Operation Date, the Parties shall supplement their information submissions described above in this Article 24 with any and all "as-built" Generating Facility information or "as-tested" performance information that differs from the initial submissions or, alternatively, written confirmation that no such differences exist. The Interconnection Customer shall conduct tests on the Generating Facility as required by Good Utility Practice such as an open circuit "step voltage" test on the Generating Facility to verify proper operation of the Generating Facility's automatic voltage regulator.

Unless otherwise agreed, the test conditions shall include: (1) Generating Facility at synchronous speed; (2) automatic voltage regulator on and in voltage control mode; and (3) a five percent change in Generating Facility terminal voltage initiated by a change in the voltage regulators reference voltage. Interconnection Customer shall provide validated test recordings showing the responses of Generating Facility terminal and field voltages. In the event that direct recordings of these voltages is impractical, recordings of other voltages or currents that mirror the response of the Generating Facility's terminal or field voltage are acceptable if information necessary to translate these alternate quantities to actual Generating Facility terminal or field voltages is provided. Generating Facility testing shall be conducted and results provided to Distribution Provider for each individual generating unit in a station.

Subsequent to the Commercial Operation Date, Interconnection Customer shall provide Distribution Provider any information changes due to equipment replacement, repair, or adjustment. Distribution Provider shall provide Interconnection Customer any information changes due to equipment replacement, repair or adjustment in the directly connected substation or any adjacent Distribution Provider-owned substation that may affect Interconnection Customer's Interconnection Facilities equipment ratings, protection or operating requirements. The Parties shall provide such information no later than thirty (30) Calendar Days after the date of the equipment replacement, repair or adjustment.

Article 25. Information Access and Audit Rights

25.1 Information Access. Each Party (the "disclosing Party") shall make available to the other Party information that is in the possession of the disclosing Party and is necessary in order for the other Party to: (i) verify the costs incurred by the disclosing Party for which the other Party is responsible under this GIA; and (ii) carry out its obligations and responsibilities under this GIA. The Parties shall not use such information for purposes other than those set forth in this Article 25.1 and to enforce their rights under this GIA.

25.2 Reporting of Non-Uncontrollable Force Events. Each Party (the "notifying Party") shall notify the other Party when the notifying Party becomes aware of its inability to comply with the provisions of this GIA for a reason other than an Uncontrollable Force event. The Parties agree to cooperate with each other and provide necessary information regarding such inability to comply, including the date, duration, reason for the inability to comply, and corrective actions taken or planned to be taken with respect to such inability to comply. Notwithstanding the foregoing, notification, cooperation or information provided under this article shall not entitle the Party receiving such notification to allege a cause for anticipatory breach of this GIA.

25.3 Audit Rights. Subject to the requirements of confidentiality under Article 22 of this GIA, each Party shall have the right, during normal business hours, and upon prior reasonable notice to the other Party, to audit at its own expense the other Party's accounts and records pertaining to either Party's performance or either Party's satisfaction of obligations under this GIA. Such audit rights shall include audits of the other Party's costs, calculation of invoiced amounts, Distribution Provider's efforts to allocate responsibility for interruption or reduction of generation on the Distribution System, and each Party's actions in an Emergency Condition. Any audit authorized by this article shall be performed at the offices where such accounts and records are maintained and shall be limited to those portions of such accounts and records that relate to each Party's performance and satisfaction of obligations under this GIA. Each Party shall keep such accounts and records for a period equivalent to the audit rights periods described in Article 25.4.

25.4 Audit Rights Periods.

25.4.1 Audit Rights Period for Construction-Related Accounts and Records. Accounts and records related to the design, engineering, procurement, and construction of Distribution Provider's Interconnection Facilities, Distribution Upgrades, and Network Upgrades shall be subject to audit for a period of twenty-four months following Distribution Provider's issuance of a final invoice in accordance with Article 12.2.

25.4.2 Audit Rights Period for All Other Accounts and Records. Accounts and records related to either Party's performance or satisfaction of all obligations under this GIA other than those described in Article 25.4.1 shall be subject to audit as follows: (i) for an audit relating to cost obligations, the applicable audit rights period shall be twenty-four months after the auditing Party's receipt of an invoice giving rise to such cost obligations; and (ii) for an audit relating to all

other obligations, the applicable audit rights period shall be twenty-four months after the event for which the audit is sought.

25.5 Audit Results. If an audit by a Party determines that an overpayment or an underpayment has occurred, a notice of such overpayment or underpayment shall be given to the other Party together with those records from the audit which support such determination.

Article 26. Subcontractors

26.1 General. Nothing in this GIA shall prevent a Party from utilizing the services of any subcontractor as it deems appropriate to perform its obligations under this GIA; provided, however, that each Party shall require its subcontractors to comply with all applicable terms and conditions of this GIA in providing such services and each Party shall remain primarily liable to the other Party for the performance of such subcontractor.

26.2 Responsibility of Principal. The creation of any subcontract relationship shall not relieve the hiring Party of any of its obligations under this GIA. The hiring Party shall be fully responsible to the other Party for the acts or omissions of any subcontractor the hiring Party hires as if no subcontract had been made; provided, however, that in no event shall Distribution Provider be liable for the actions or inactions of Interconnection Customer or its subcontractors with respect to obligations of Interconnection Customer under Article 5 of this GIA. Any applicable obligation imposed by this GIA upon the hiring Party shall be equally binding upon, and shall be construed as having application to, any subcontractor of such Party.

26.3 No Limitation by Insurance. The obligations under this Article 26 will not be limited in any way by any limitation of subcontractor's insurance.

Article 27. Disputes

27.1 Submission. In the event either Party has a dispute, or asserts a claim, that arises out of or in connection with this GIA or its performance, such Party (the "disputing Party") shall provide the other Party with written notice of the dispute or claim ("Notice of Dispute"). Such dispute or claim shall be referred to a designated senior representative of each Party for resolution on an informal basis as promptly as practicable after receipt of the Notice of Dispute by the other Party. In the event the designated representatives are unable to resolve the claim or dispute through unassisted or assisted negotiations within thirty (30) Calendar Days of the other Party's receipt of the Notice of Dispute, such claim or dispute may, upon mutual agreement of the Parties, be submitted to arbitration and resolved in accordance with the arbitration procedures set forth below. In the event the Parties do not agree to submit such claim or dispute to arbitration, each Party may exercise whatever rights and remedies it may have in equity or at law consistent with the terms of this GIA.

27.2 External Arbitration Procedures. Any arbitration initiated under this GIA shall be conducted before a single neutral arbitrator appointed by the Parties. If the Parties fail to agree upon a single arbitrator within ten (10) Calendar Days of the submission of the dispute to arbitration, each Party shall choose one arbitrator who shall sit on a three-member arbitration panel. The two arbitrators so chosen shall within twenty (20) Calendar Days select a third arbitrator to chair the arbitration panel. In either case, the arbitrators shall be knowledgeable in electric utility matters, including electric transmission and bulk power issues, and shall not have any current or past substantial business or financial relationships with any party to the arbitration (except prior arbitration). The arbitrator(s) shall provide each of the Parties an opportunity to be heard and, except as otherwise provided herein, shall conduct the arbitration in accordance with the Commercial Arbitration Rules of the American Arbitration Association ("Arbitration Rules") and any applicable FERC regulations; provided, however, in the event of a conflict between the Arbitration Rules and the terms of this Article 27, the terms of this Article 27 shall prevail.

27.3 Arbitration Decisions. Unless otherwise agreed by the Parties, the arbitrator(s) shall render a decision within ninety (90) Calendar Days of appointment and shall notify the Parties in writing of such decision and the reasons therefor. The arbitrator(s) shall be authorized only to interpret and apply the provisions of this GIA and shall have no power to modify or change any provision of this Agreement in any manner. The decision of the arbitrator(s) shall be final and binding upon the Parties, and judgment on the award may be entered in any court having jurisdiction. The decision of the arbitrator(s) may be appealed solely on the grounds that the conduct of the arbitrator(s), or the decision itself, violated the standards set forth in the Federal Arbitration Act or the Administrative Dispute Resolution Act. The final decision of the arbitrator must also be filed with FERC if it affects jurisdictional rates, terms and conditions of service, Interconnection Facilities, Distribution Upgrades, or Network Upgrades.

27.4 Costs. Each Party shall be responsible for its own costs incurred during the arbitration process and for the following costs, if applicable: (1) the cost of the arbitrator chosen by the Party to sit on the three member panel and one half of the cost of the third arbitrator chosen; or (2) one half the cost of the single arbitrator jointly chosen by the Parties.

Article 28. Representations, Warranties, and Covenants

28.1 General. Each Party makes the following representations, warranties and covenants:

28.1.1 Good Standing. Such Party is duly organized, validly existing and in good standing under the laws of the state in which it is organized, formed, or incorporated, as applicable; that it is qualified to do business in the state or states in which the Generating Facility, Interconnection Facilities and Network Upgrades owned by such Party, as applicable, are located; and that it has the corporate power and authority to own its properties, to carry on its business as now being conducted and to enter into this GIA and carry out the transactions

contemplated hereby and perform and carry out all covenants and obligations on its part to be performed under and pursuant to this GIA.

28.1.2 Authority. Such Party has the right, power and authority to enter into this GIA, to become a Party hereto and to perform its obligations hereunder. This GIA is a legal, valid and binding obligation of such Party, enforceable against such Party in accordance with its terms, except as the enforceability thereof may be limited by applicable bankruptcy, insolvency, reorganization or other similar laws affecting creditors' rights generally and by general equitable principles (regardless of whether enforceability is sought in a proceeding in equity or at law).

28.1.3 No Conflict. The execution, delivery and performance of this GIA does not violate or conflict with the organizational or formation documents, or bylaws or operating agreement, of such Party, or any judgment, license, permit, order, material agreement or instrument applicable to or binding upon such Party or any of its assets.

28.1.4 Consent and Approval. Such Party has sought or obtained, or, in accordance with this GIA will seek or obtain, each consent, approval, authorization, order, or acceptance by any Governmental Authority in connection with the execution, delivery and performance of this GIA, and it will provide to any Governmental Authority notice of any actions under this GIA that are required by Applicable Laws and Regulations.

Article 29. [Reserved]

Article 30. Miscellaneous

30.1 Binding Effect. This GIA and the rights and obligations hereof, shall be binding upon and shall inure to the benefit of the successors and assigns of the Parties hereto.

30.2 Conflicts. In the event of a conflict between the body of this GIA and any attachment, appendices or exhibits hereto, the terms and provisions of the body of this GIA shall prevail and be deemed the final intent of the Parties.

30.3 Rules of Interpretation. This GIA, unless a clear contrary intention appears, shall be construed and interpreted as follows: (1) the singular number includes the plural number and vice versa; (2) reference to any person includes such person's successors and assigns but, in the case of a Party, only if such successors and assigns are permitted by this GIA, and reference to a person in a particular capacity excludes such person in any other capacity or individually; (3) reference to any agreement (including this GIA), document, instrument or tariff means such agreement, document, instrument, or tariff as amended or modified and in effect from time to time in accordance with the terms thereof and, if applicable, the terms hereof; (4) reference to any Applicable Laws and Regulations means such Applicable Laws and Regulations as amended, modified, codified, or reenacted, in whole or in part, and in effect from time to time, including, if applicable,

rules and regulations promulgated thereunder; (5) unless expressly stated otherwise, reference to any Article, Section or Appendix means such Article of this GIA or such Appendix to this GIA, or such Section to the GIP or such Appendix to the GIP, as the case may be; (6) "hereunder", "hereof", "herein", "hereto" and words of similar import shall be deemed references to this GIA as a whole and not to any particular Article or other provision hereof or thereof; (7) "including" (and with correlative meaning "include") means including without limiting the generality of any description preceding such term; and (8) relative to the determination of any period of time, "from" means "from and including", "to" means "to but excluding" and "through" means "through and including".

30.4 **Entire Agreement.** This GIA, including all Appendices and Schedules attached hereto, constitutes the entire agreement between the Parties with reference to the subject matter hereof, and supersedes all prior and contemporaneous understandings or agreements, oral or written, between the Parties with respect to the subject matter of this GIA. There are no other agreements, representations, warranties, or covenants which constitute any part of the consideration for, or any condition to, either Party's compliance with its obligations under this GIA.

30.5 **No Third Party Beneficiaries.** This GIA is not intended to and does not create rights, remedies, or benefits of any character whatsoever in favor of any persons, corporations, associations, or entities other than the Parties, and the obligations herein assumed are solely for the use and benefit of the Parties, their successors in interest and, where permitted, their assigns.

30.6 **Waiver.** The failure of a Party to this GIA to insist, on any occasion, upon strict performance of any provision of this GIA will not be considered a waiver of any obligation, right, or duty of, or imposed upon, such Party.

Any waiver at any time by either Party of its rights with respect to this GIA shall not be deemed a continuing waiver or a waiver with respect to any other failure to comply with any other obligation, right, duty of this GIA. Termination or Default of this GIA for any reason by Interconnection Customer shall not constitute a waiver of Interconnection Customer's legal rights to obtain an interconnection from Distribution Provider. Any waiver of this GIA shall, if requested, be provided in writing.

30.7 **Headings.** The descriptive headings of the various Articles of this GIA have been inserted for convenience of reference only and are of no significance in the interpretation or construction of this GIA.

30.8 **Multiple Counterparts.** This GIA may be executed in two or more counterparts, each of which is deemed an original but all constitute one and the same instrument.

30.9 **Amendment.** The Parties may by mutual agreement amend this GIA by a written instrument duly executed by the Parties.

30.10 Modification by the Parties. The Parties may by mutual agreement amend the Appendices to this GIA by a written instrument duly executed by the Parties. Such amendment shall become effective and a part of this GIA upon satisfaction of all Applicable Laws and Regulations.

30.11 Reservation of Rights. Distribution Provider shall have the right to make a unilateral filing with FERC to modify this GIA with respect to any rates, terms and conditions, charges, classifications of service, rule or regulation under section 205 or any other applicable provision of the Federal Power Act and FERC's rules and regulations thereunder, and Interconnection Customer shall have the right to make a unilateral filing with FERC to modify this GIA pursuant to section 206 or any other applicable provision of the Federal Power Act and FERC's rules and regulations thereunder; provided that each Party shall have the right to protest any such filing by the other Party and to participate fully in any proceeding before FERC in which such modifications may be considered. Nothing in this GIA shall limit the rights of the Parties or of FERC under sections 205 or 206 of the Federal Power Act and FERC's rules and regulations thereunder, except to the extent that the Parties otherwise mutually agree as provided herein.

30.12 No Partnership. This GIA shall not be interpreted or construed to create an association, joint venture, agency relationship, or partnership between the Parties or to impose any partnership obligation or partnership liability upon either Party. Neither Party shall have any right, power or authority to enter into any agreement or undertaking for, or act on behalf of, or to act as or be an agent or representative of, or to otherwise bind, the other Party.

IN WITNESS WHEREOF, the Parties have executed this GIA in duplicate originals, each of which shall constitute and be an original effective Agreement between the Parties.

Southern California Edison Company

By: KMPayne

Name: Kevin M. Payne

Title: Vice President, Engineering & Technical Services, TDBU

Date: 8/6/2012

Houweling Nurseries Oxnard, Inc.

By: _____

Name: Casey Houweling

Title: President

Date: Aug 8/2012.

Appendix A to GIA

Interconnection Facilities, Network Upgrades and Distribution Upgrades

The Distribution Provider's Interconnection Facilities, Network Upgrades and Distribution Upgrades described in this Appendix A are based on the Distribution Provider's preliminary engineering and design. Such descriptions are subject to modification to reflect the actual facilities constructed and installed following the Distribution Provider's final engineering and design, identification of field conditions, and compliance with applicable environmental and permitting requirements.

1. Interconnection Facilities.

(a) **Interconnection Customer's Interconnection Facilities.** The Interconnection Customer shall:

(i) Install 16 kV switchgear at the Generating Facility.

(ii) Install all required ISO-approved compliant metering equipment at the Generating Facility, in accordance with Section 10 of the ISO Tariff.

(iii) Provide a metering cabinet for the Distribution Provider to install its retail metering equipment and related meters. Such cabinet must be placed at a location that would allow twenty-four hour access for the Distribution Provider's metering personnel.

(iv) Allow the Distribution Provider to install revenue meters required to meter the retail load at the Generating Facility.

(v) Provide and install all required data signal cables to the remote terminal unit ("RTU") cabinet or a nearby interface cabinet for termination in accordance with the Interconnection Handbook.

(vi) Make available adequate space and facilities necessary for the installation of the Distribution Provider's RTU.

(vii) Install, in coordination with, and as specified by, the Distribution Provider, a dedicated T1 circuit from the local telephone company to support the RTU communication to the Distribution Provider's energy management system in accordance with the Interconnection Handbook.

(viii) Designate, to the T1 circuit provider, the Distribution Provider as a representative authorized to report trouble to, and to initiate repairs with, the communication circuit provider on the Interconnection Customer's behalf in the event of an interruption of service on the communication circuit.

(ix) Install disconnect facilities in accordance with the Distribution Provider's Interconnection Handbook to comply with the Distribution Provider's switching and tagging procedures.

(b) **Distribution Provider's Interconnection Facilities.** The Distribution Provider shall:

(i) **Phase I Build.**

1. Install approximately 250 feet of 1000 JCN cable

2. Install approximately 100 feet of 1/0 ACSR overhead conductor
3. Install approximately 2800 feet of 1/0 ACSR 4th line extension
4. Install radio controlled switch (RCS) controller
5. Install 3-way padmounted gas switch
6. Install 2500KVA ground bank
7. Install automation

(ii) **Phase II Build.**

1. **Estero Substation.**
   a. Equip one new 16 kV position as follows:
      i. One (1) 16 kV switchrack with foundations
      ii. One (1) circuit breaker and foundation
      iii. Three (3) sets (nine total) group operated disconnect switches
      iv. Two (2) line protection relays
   b. Install three-phase bi-direction transducer on the new 16 kV line.
2. **Houweling Nurseries Oxnard-Estero 16 kV Line.**
   a. Overbuild approximately 20,750 feet of existing 16 kV circuit with new 653 ACSR overhead line.
   b. Install three way gas switch
   c. Install 3 OH sectionalizer switches
   d. Replace 100 feet of ACSR with 336ACSR
   e. Following the Phase II Build Interconnection Facilities Completion Date, the 2800 feet of 1/0 ACSR 4th line extension, identified in Section 1(b)(i)3 above, may be removed in accordance with Section 12(b).

(i) **Telecommunications.**

Install all required equipment (including terminal equipment) supporting the remote terminal unit ("RTU"), including the communications interface with the Distribution Provider's energy management system. In accordance with the Interconnection Handbook, the Distribution Provider shall provide the required interface equipment at the Generating Facility necessary to connect the RTU to the Interconnection Customer's T1 circuit. Additionally, the Distribution Provider will provide the interface equipment required to connect the T1 circuit to the Distribution Provider's energy management system. Notwithstanding that certain telecommunication equipment, including the telecommunications terminal equipment, will be located on the Interconnection Customer's side of the Point of Change of Ownership, the Distribution Provider shall own, operate and maintain such telecommunication equipment as part of the Distribution Provider's Interconnection Facilities.

(ii) **Real Properties, Transmission Project Licensing, and Environmental Health and Safety.**

Obtain easements and/or acquire land, obtain licensing and permits, and perform all required environmental activities for the installation of the Distribution Provider's Interconnection Facilities, including any associated telecommunication

equipment for the Houweling Nurseries Oxnard-Estero 16 kV Line and telecommunication route.

(iii) **Metering.**
Install revenue meters and metering equipment required to meter the retail load at the Generating Facility. Notwithstanding that the meters will be located on the Interconnection Customer's side of the Point of Change of Ownership, the Distribution Provider shall own, operate and maintain such facilities as part of the Distribution Provider's Interconnection Facilities.

(iv) **Power System Control.**
Install one (1) RTU at the Generating Facility to monitor typical generation elements such as MW, MVAR, terminal voltage and circuit breaker status for the Generating Facility and plant auxiliary load, and transmit the information received thereby to the Distribution Provider's Grid Control Center. Notwithstanding that the RTU will be located on the Interconnection Customer's side of the Point of Change of Ownership, the Distribution Provider shall own, operate and maintain the RTU as part of the Distribution Provider's Interconnection Facilities.

2. **Network Upgrades.**

(a) **Stand Alone Network Upgrades**. None.

(b) **Other Network Upgrades.**

(i) **Reliability Network Upgrades.** None identified in the initial Interconnection Studies.

This GIA may be amended to assign the Interconnection Customer financial responsibility for any Reliability Network Upgrades identified in the short circuit duty analysis on the ISO Grid in accordance with Section 5.8.1.1 of the GIP.

(ii) **Delivery Network Upgrades.** None.

3. **Distribution Upgrades.**

(a) **Phase I Build** – None.

(b) **Phase II Build** – The Distribution Provider shall:

(i) **Distribution**

1. Replace approximately 45 distribution poles on existing 66 kV pole line.

(ii) **Subtransmission**

1. Replace approximately 20 subtransmission poles on existing 66 kV pole line.
2. Extend approximately 130 feet of new duct system.
3. Install new vault around existing duct system.

(c) **Real Properties, Transmission Project Licensing, and Environmental Health and Safety:**

(i) Obtain easements and/or acquire land, obtain licensing and permits, and perform all required environmental activities for the installation of Distribution Upgrades and associated telecommunication equipment.

4. Not Used

5. Point of Change of Ownership.

(a) The Point of Change of Ownership shall be at the Interconnection Customer's 16 kV switchgear located at the Interconnection Customer's facility.

6. Point of Interconnection. The Distribution Provider's Estero 66/16 kV Substation at the 16 kV bus.

7. One-Line Diagram of Interconnection to Estero 66/16 kV Substation.

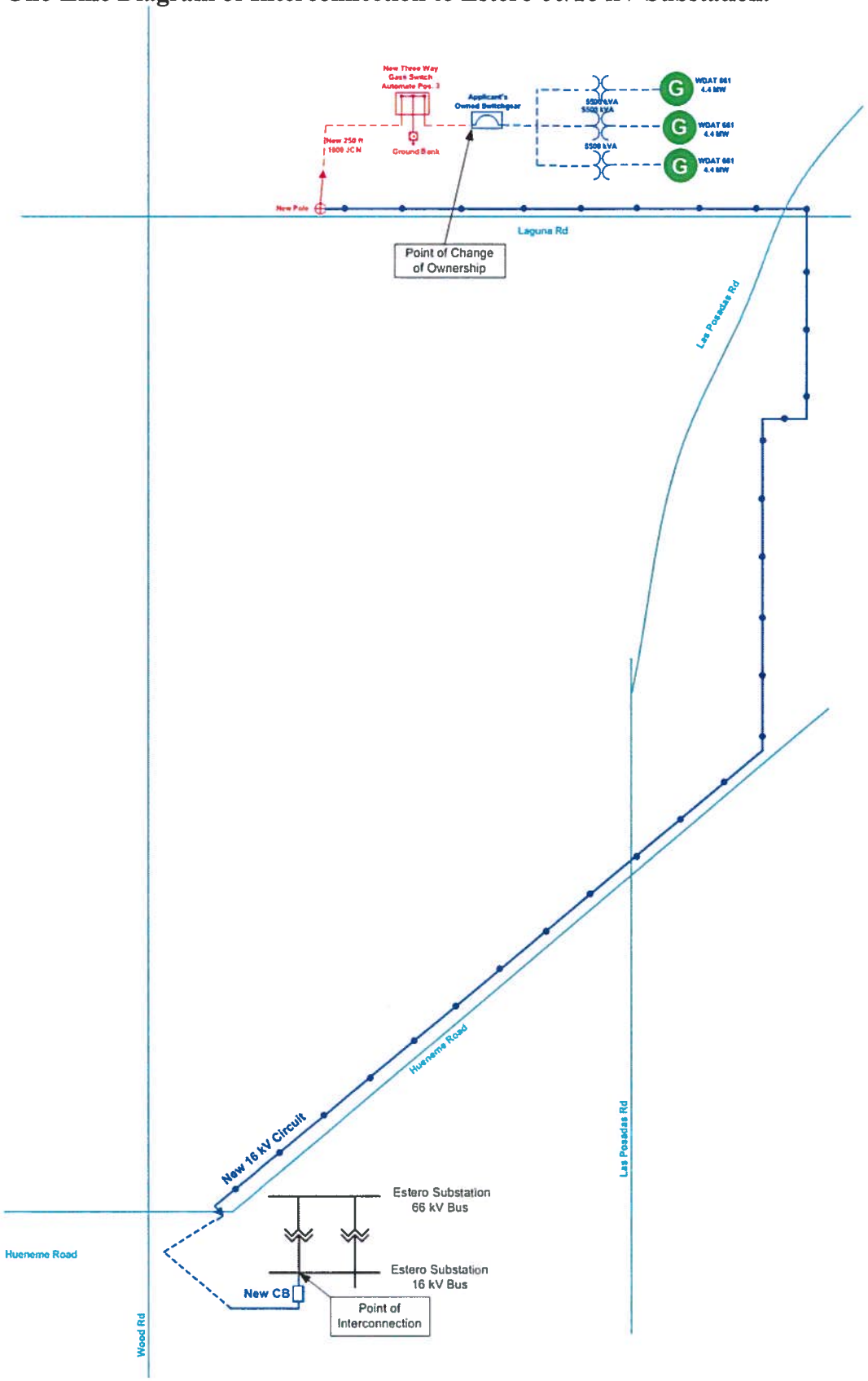

8. **Additional Definitions.** For the purposes of these Appendices, the following terms, when used with initial capitalization, whether in the singular or the plural, shall have the meanings specified below:

(a) Accounting Practice: Generally accepted accounting principles and practices applicable to electric utility operations.

(b) Annual Tax Security Reassessment: In accordance with the directives of FERC Orders 2003-A and 2003-B associated with Article 5.17.4 of the GIA, the annual reassessment of the current tax liability, which will commence the first year after Interconnection Customer's in-service date.

(c) Balancing Authority: The responsible entity that integrates resource plans ahead of time, maintains load-interchange-generation balance within a Balancing Authority Area, and supports interconnection frequency in real time.

(d) Balancing Authority Area: The collection of generation, transmission, and loads within the metered boundaries of the Balancing Authority. The Balancing Authority maintains load-resource balance within this area.

(e) Capital Additions: Any modifications to the Distribution Provider's Interconnection Facilities. Such modifications may be any Units of Property which are added to the Distribution Provider's Interconnection Facilities ; the enlargement, modification or betterment of any Units of Property constituting a part of the Distribution Provider's Interconnection Facilities ; or the replacement of any Units of Property constituting a part of the Distribution Provider's Interconnection Facilities , irrespective of whether such replacement constitutes an enlargement, modification or betterment of that which it replaces; and the costs of which additions, enlargements, modifications, betterments or replacements in accordance with Accounting Practice would be capitalized and have not previously been included in the Interconnection Facilities Cost.

(f) Capital Additions Cost: All costs, excluding One-Time Cost, determined by Distribution Provider to be associated with the design, engineering, procurement, construction and installation of Capital Additions.

(g) CPUC: The California Public Utilities Commission, or its regulatory successor.

(h) Credit Support: A parent guarantee, letter of credit, surety bond, or other security meeting the requirements of Section 5.9.1 of the GIP.

(i) Customer-Financed Monthly Rate: The rate most recently adopted by the CPUC for application to the Distribution Provider's retail electric customers for added facilities, which does not compensate the Distribution Provider for replacement of added facilities. The currently effective Customer-Financed Monthly Rate is as provided in Section 16 of this Appendix A.

(j) Delivery Network Upgrades Cost: The Interconnection Customer's allocated share of all costs, excluding One-Time Cost, determined by the Distribution Provider to be associated with the design, engineering, procurement, construction and installation of the Delivery Network Upgrades. The Delivery Network Upgrades Cost is provided in Section 15 of this Appendix A.

(k) Delivery Network Upgrades Payment: The sum of the Delivery Network Upgrades Cost and associated One-Time Cost. The Delivery Network Upgrades Payment is provided in Section 17 of this Appendix A.

(l) Distribution Upgrades Cost: The Interconnection Customer's allocated share of all costs, excluding ITCC and One-Time Cost, determined by the Distribution Provider to be associated with the design, engineering, procurement, construction and installation of the Distribution Upgrades. The Distribution Upgrades Cost is provided in Section 15 of this Appendix A.

(m) Distribution Upgrades Payment: The sum of the Distribution Upgrades Cost and associated One-Time Cost. The Distribution Upgrades Payment is provided in Section 17 of this Appendix A.

(n) Interconnection Facilities Charge: The monthly charge to the Interconnection Customer to recover the revenue requirements for the Distribution Provider's Interconnection Facilities, calculated as the product of the Customer-Financed Monthly Rate and the Interconnection Facilities Cost. The Interconnection Facilities Charge is provided in Section 16 of this Appendix A.

(o) Interconnection Facilities Cost: All costs, excluding One-Time Cost, determined by the Distribution Provider to be associated with the design, engineering, procurement, construction and installation of the Distribution Provider's Interconnection Facilities. The Interconnection Facilities Cost is provided in Section 15 of this Appendix A.

(p) Interconnection Facilities Payment: The sum of the Interconnection Facilities Cost and associated One-Time Cost. The Interconnection Facilities Payment is provided in Section 17 of this Appendix A.

(q) ITCC (Income Tax Component of Contribution): The ITCC is equal to the estimated tax liability described in Article 5.17.4 of the GIA and is the Income Tax Component of Contribution specified in the Preliminary Statement, Part M of the Distribution Provider's tariff on file with the CPUC, applicable to the Distribution Upgrades Cost and Interconnection Facilities Cost. The ITCC applicable to the Distribution Upgrades Cost and Interconnection Facilities Cost is described in Section 11 of this Appendix A and is shown in Section 15 of this Appendix A.

(r) Letter Agreement: The agreement between Distribution Provider and Interconnection Customer executed on October 5, 2011, as amended, under which Distribution Provider

performed the operational study, engineering, design, procurement and construction work to accommodate 2 MW of generation from the Houweling Nurseries Oxnard Project, with an early interconnection target date of end-first quarter 2012.

(s) One-Time Cost: All costs determined by the Distribution Provider to be associated with the installation of the Delivery Network Upgrades, Distribution Upgrades, Distribution Provider's Interconnection Facilities, Reliability Network Upgrades, or Capital Additions which are not capitalized.

(t) Phase I Build: Those facilities that were installed under the Letter Agreement to accommodate the initial 2 MW of generation from the Houweling Nurseries Oxnard Project, as identified in Section 1(b)(i) of this Appendix A.

(u) Phase II Build: Those additional facilities required to interconnect the remaining 11.2 MW of generation from Houweling Nurseries Oxnard Project, as identified in Section 1(b)(ii) and Section 3(b)of this Appendix A.

(v) Phase I Build Interconnection Facilities Completion Date: The date upon which the construction of the Distribution Provider's Interconnection Facilities for the Phase I Build is complete and such facilities are successfully tested and ready for service.

(w) Phase II Build Interconnection Facilities Completion Date: The date upon which the construction of the Distribution Provider's Interconnection Facilities for the Phase II Build is complete and such facilities are successfully tested and ready for service.

(x) Reliability Network Upgrades Cost: The Interconnection Customer's allocated share of all costs, excluding One-Time Cost, determined by the Distribution Provider to be associated with the design, engineering, procurement, construction and installation of the Reliability Network Upgrades. The Reliability Network Upgrades Cost is provided in Section 15 of this Appendix A.

(y) Reliability Network Upgrades Payment: The sum of the Reliability Network Upgrades Cost and associated One-Time Cost. The Reliability Network Upgrades Payment is provided in Section 17 of this Appendix A.

(z) Removal Cost: The actual cost the Distribution Provider incurs for the removal of the Distribution Provider's Interconnection Facilities, or any portion thereof, which is calculated as the amount, if positive, of the costs of removal minus the salvage value of the Distribution Provider's Interconnection Facilities.

(aa) Special Protection System ("SPS"): A system that reduces or trips generation under contingency outages to maintain system stability or to limit overloads on electric system facilities.

(bb) Tax Security: The Interconnection Customer's provision of Security with respect to the Interconnection Customer's tax indemnification obligations, provided in accordance with Article 5.17.3.

(cc) Units of Property: As described in FERC's "List of Units of Property for Use in Connection with Uniform System of Accounts Prescribed for Public Utilities and Licensees" in effect as of the date of this GIA, as such "List" may be amended from time to time.

9. **Transmission Credits.** None.

10. **Security Amount for the Distribution Upgrades, the Distribution Provider's Interconnection Facilities and Network Upgrades.**

(a) Distribution Upgrades: Pursuant to Section 5.9 of the GIP, and Article 11.5 and Appendix B of the GIA, the Interconnection Customer shall provide a total Credit Support in the amount of $606,900 for the second posting and $2,023,000 for the third posting to cover the costs for constructing, procuring and installing the Distribution Upgrades.

(b) The Distribution Provider's Interconnection Facilities: Pursuant to Section 5.9 of the GIP, and Article 11.5 and Appendix B of the GIA, the Interconnection Customer shall provide a total Credit Support in the amount of $563,400 for the second posting and $1,878,000 for the third posting to cover the costs for constructing, procuring and installing the Distribution Provider's Interconnection Facilities. This amount excludes cash payments made pursuant to the Letter Agreement.

(c) Network Upgrades: Pursuant to Section 5.9 of the GIP, and Article 11.5 and Appendix B of the GIA, the Interconnection Customer shall provide a total Credit Support in the amount of $0 for the second posting and $0 for the third posting to cover the costs for constructing, procuring and installing the Network Upgrades.

(d) To the extent that any Credit Support is not utilized by the Distribution Provider, the release of such Credit Support shall be made in accordance with the Interconnection Customer's instruction.

11. **Security Amount for Estimated Tax Liability.** Pursuant to Article 5.17.4 of the GIA, the Interconnection Customer's estimated tax liability is as follows:

Current Tax Rate x (Gross Income Amount – Present Value of Tax Depreciation)/(1 – Current Tax Rate) = 35%

Estimated tax liability for Distribution Upgrades = 35% x (Distribution Upgrades Cost) = 35% x $2,023,000 = $708,050

Estimated tax liability for Distribution Provider's Interconnection Facilities = 35% x (Interconnection Facilities Cost) = 35% x $2,193,000 = $767,550

Estimated tax liability assumes the following costs:

Interconnection Facilities Cost = $2,193,000

Distribution Upgrades Cost = $2,023,000

Based upon the total estimated tax liability, the Interconnection Customer shall provide the Distribution Provider cash or a letter of credit in the amount of $1,475,600, pursuant to Article 5.17.3 and Appendix B of the GIA. The letter of credit or cash shall be in the form provided under Section 5.9.1 of the GIP.

Upon notification of the Annual Tax Security Reassessment, the Interconnection Customer shall modify its Tax Security accordingly. If the Annual Tax Security Reassessment results in a deficiency in the Tax Security amount, the Interconnection Customer will be required to increase its Tax Security amount within 30 days after receipt of the deficiency notification. If the Annual Tax Security Reassessment results in a reduction of the Tax Security amount, the Interconnection Customer may choose to reduce its Tax Security amount or maintain the Tax Security in the current amount for the following year.

The Annual Tax Security Reassessment will be calculated utilizing the following methodology:

1) Tax Assessment Event:
   ((Current Tax Rate x (Gross income - NPV Tax Depreciation)) + Interest)/(1 - Current Tax Rate)

2) Subsequent Taxable Event:
   (Current Tax Rate x (Replacement Facility Cost – NPV Tax Depreciation))/(1- Current Tax Rate)

The Interconnection Customer's obligation to provide Tax Security shall terminate at the earlier of (1) the expiration of the ten year testing period and the applicable statute of limitation, as it may be extended by the Distribution Provider upon request of the IRS, to keep these years open for audit or adjustment, or (2) the occurrence of a subsequent taxable event and the payment of any related indemnification obligations. Upon termination of the Interconnection Customer's obligation to provide Tax Security, any unused amount of the Tax Security shall be released to the Interconnection Customer.

12. Removal of the Distribution Provider's Interconnection Facilities and Distribution Upgrades.

(a) Following termination of the GIA, the Distribution Provider will remove the Distribution Provider's Interconnection Facilities and Distribution Upgrades from service to the Interconnection Customer, pursuant to Article 2.5 of the GIA. On or

before the date one year following termination of the GIA, the Distribution Provider shall notify the Interconnection Customer as to whether the Distribution Provider intends to physically remove the Distribution Provider's Interconnection Facilities, Distribution Upgrades, or any part thereof. If the Distribution Provider intends to physically remove the Distribution Provider's Interconnection Facilities, Distribution Upgrades, or any part thereof, then the Distribution Provider shall physically remove such facilities within two years from the date of notification of intent, and the Interconnection Customer shall pay the Removal Cost. If the Distribution Provider does not intend to physically remove the Distribution Provider's Interconnection Facilities, Distribution Upgrades, or any part thereof, then the Interconnection Customer shall have no obligation to pay such Removal Cost.

(b) Following Phase II Build Interconnection Facilities Completion Date, the Distribution Provider may remove the following Distribution Provider's Interconnection Facilities: 2800 feet of 1/0 ACSR 4th line extension, as identified in Section 1(b)(ii)3, from service to the Interconnection Customer. Within one year following the Phase II Build Interconnection Facilities Completion Date, Distribution Provider shall determine if the 2800 feet of 1/0 ACSR 4th line extension identified in Section 1(b)(ii)3 will be removed, and shall notify the Interconnection Customer. If the Distribution Provider intends to physically remove the line, or any part thereof, then the Distribution Provider shall physically remove such line within two years from the date of notification of intent, and the Interconnection Customer shall pay the Removal Cost associated with such line. If the Distribution Provider does not intend to physically remove such line, then the Interconnection Customer shall have no obligation to pay such Removal Cost.

13. Charges.

(a) The Interconnection Customer shall pay to the Distribution Provider the following charges in accordance with the GIA: (i) Distribution Upgrades Payment; (ii) Delivery Network Upgrades Payment; (iii) Interconnection Facilities Payment; (iv) Reliability Network Upgrades Payment; (v) payments for any Capital Additions; (vi) Distribution Upgrades Charge; (vii) Interconnection Facilities Charge; (viii) any reimbursable FERC fees pursuant to Section 14(h) of this Appendix A; (ix) Removal Cost pursuant to Article 2.4.3 of the GIA and Section 12 of this Appendix A; (x) termination charges pursuant to Article 2.4 of the GIA; (xi) disconnection costs pursuant to Article 2.5 of the GIA; and (xii) suspension costs pursuant to Article 5.16 of the GIA.

(b) The Distribution Upgrades Cost, Delivery Network Upgrades Cost, Interconnection Facilities Cost, Reliability Network Upgrades Cost, Capital Additions Cost, One-Time Cost and Removal Cost shall be compiled in accordance with Accounting Practice.

(c) If, during the term of the GIA, the Distribution Provider executes an agreement to provide service to another entity (other than retail load) that contributes to the need for the Distribution Provider's Interconnection Facilities, the charges due hereunder may

be adjusted to appropriately reflect such service based on the Distribution Provider's cost allocation principles in effect at such time and shall be subject to FERC's approval.

(d) If Capital Additions are required in order to benefit the Distribution Provider, or because of damage caused by negligence or willful misconduct of the Distribution Provider, then the Interconnection Customer will not bear cost responsibility for such Capital Additions; and no adjustment will be made to the Interconnection Facilities Cost or the Distribution Upgrades Cost; and no Capital Additions Cost or One-Time Cost will be charged to the Interconnection Customer for such Capital Additions.

14. Supplemental Billing and Payment Provisions.

(a) Pursuant to Article 12.1 of the GIA, the Distribution Provider shall submit to the Interconnection Customer invoices due for the preceding month for the Distribution Upgrades Payment, Delivery Network Upgrades Payment, Interconnection Facilities Payment and Reliability Network Upgrades Payment.

(b) Pursuant to Article 10.5 of the GIA, commencing on or following the Phase I Build Interconnection Facilities Completion Date, each month the Distribution Provider will render bills to the Interconnection Customer for the Interconnection Facilities Charge. The Interconnection Facilities Charge shall initially be based on the estimated Interconnection Facilities Cost, as specified in Section 15 of this Appendix A, and payments made for such Interconnection Facilities Charge shall be subject to later adjustment pursuant to Sections 14(b)(i) and 14(b)(ii) of this Appendix A. The Interconnection Facilities Charge for the first and last month of service hereunder shall be pro-rated based on the number of days in which service was provided during said months.

(i) If the amounts paid for the Interconnection Facilities Charge are less than the amounts due for the Interconnection Facilities Charge, as determined from the actual recorded Interconnection Facilities Cost, the Distribution Provider will bill the Interconnection Customer the difference between the amounts previously paid by the Interconnection Customer and the amounts which would have been paid based on actual recorded costs, without interest, on the next regular billing.

(ii) If the amounts paid for the Interconnection Facilities Charge are greater than the amounts due for the Interconnection Facilities Charge, as determined from the actual recorded Interconnection Facilities Cost, the Distribution Provider will credit the Interconnection Customer the difference between the amounts previously paid by the Interconnection Customer and the amounts which would have been paid based on actual recorded costs, without interest, on the next regular billing.

(c) In the event that any portion of the Distribution Provider's Interconnection Facilities for the Phase I Build is not complete but, at the request of the Interconnection Customer,

the Distribution Provider commences interconnection service under this GIA notwithstanding the incomplete facilities, the Distribution Provider shall commence billing, and the Interconnection Customer shall pay, the Interconnection Facilities Charge commencing on the date that such service commences.

(d) In accordance with Article 5.19.3 of the GIA, the Distribution Provider shall submit invoices to the Interconnection Customer for the preceding month for Capital Additions payments due, if any.

(i) For Capital Additions that are the cost responsibility of the Interconnection Customer, the Distribution Provider will provide at least sixty (60) Calendar Days advance written notification to the Interconnection Customer prior to commencing work, except that the Distribution Provider may commence the work on the Capital Additions with either shorter advance written notification or written notification after the work has commenced, at the Distribution Provider's sole discretion, if the Distribution Provider determines that the Capital Additions are required to comply with safety or regulatory requirements or to preserve system integrity or reliability. Any such written notification will include the estimated cost of the Capital Additions, and the amount of and due date for the security, if any, required to be paid by the Interconnection Customer, which is sufficient to cover the costs for constructing, procuring and installing the Capital Additions consistent with the applicable terms of Article 11.5 of the GIA.

(ii) Except as provided in Section 13(d) of this Appendix A, if certain of the Distribution Provider's Interconnection Facilities or Distribution Upgrades are removed to accommodate Capital Additions and such removal results in a change in the Interconnection Facilities Cost or Distribution Upgrades Cost, as applicable, the Interconnection Facilities Charge or Distribution Upgrades Charge, as applicable, shall be adjusted to reflect the change in the Interconnection Facilities Cost and Distribution Upgrades Cost as of the in-service date of such Capital Additions.

(iii) Except as provided in Section 13(d) of this Appendix A, if Capital Additions result in an increase in the Interconnection Facilities Cost or Distribution Upgrades Cost, as applicable, then the Interconnection Facilities Charge shall be adjusted as of the in-service date of such Capital Additions to reflect the change in such costs.

(e) As soon as reasonably practicable, but within twelve (12) months after the in-service date of any Capital Additions, the Distribution Provider shall provide an invoice of the final cost of the construction of the Capital Additions to the Interconnection Customer, and shall set forth such costs in sufficient detail to enable the Interconnection Customer to compare the actual costs with the estimates and to ascertain deviations, if any, from the cost estimates. The Distribution Provider will refund to the Interconnection Customer any amount by which the payment made by the Interconnection Customer for estimated costs of the Capital Additions exceeds the actual costs of construction within

thirty (30) Calendar Days of the issuance of such final construction invoice; or, in the event the actual costs of construction exceed the Interconnection Customer's payment made for the estimated costs of the Capital Additions, then the Interconnection Customer shall pay to the Distribution Provider any amount by which the actual costs of construction exceed the payment made by the Interconnection Customer for estimated costs within thirty (30) Calendar Days of the issuance of such final construction invoice.

(f) If, in accordance with the removal of the Distribution Provider's Interconnection Facilities as specified in Section 12 of this Appendix A, the Distribution Provider decides to physically remove the Distribution Provider's Interconnection Facilities, the Distribution Provider shall render a bill to the Interconnection Customer for the Removal Cost. The Interconnection Customer shall pay the Removal Cost in accordance with Article 2.4.3 of the GIA. Such billing shall initially be based on the Distribution Provider's estimate of the Removal Cost. Within twelve (12) months following the removal of the Distribution Provider's Interconnection Facilities, or any part thereof, the Distribution Provider shall determine the actual Removal Cost and provide the Interconnection Customer with a final invoice. The Distribution Provider shall refund to the Interconnection Customer any amount by which the payment by the Interconnection Customer for the estimated Removal Cost exceeds the actual Removal Cost within thirty (30) Calendar Days of the issuance of such final invoice; or, in the event the actual Removal Cost exceeds the Interconnection Customer's payment for the estimated Removal Cost, then the Interconnection Customer shall pay to the Distribution Provider any amount by which the actual Removal Cost exceeds the payment by the Interconnection Customer for the estimated Removal Cost within thirty (30) Calendar Days of the issuance of such final invoice.

(g) The Interconnection Customer shall reimburse the Distribution Provider for all fees and charges related to the FERC fees and annual charges provided in Sections 381 and 382 of the FERC's regulations (18 C.F.R. § 381 and 382), as such regulation may from time to time be amended, that are imposed on the Distribution Provider attributable to the service provided under the GIA, or any amendments thereto. The Distribution Provider will render bills to the Interconnection Customer for any such fees and charges incurred since the preceding billing. As of the Effective Date, no such fees and charges have been imposed on the Distribution Provider attributable to the service provided under the GIA.

(h) Prior to the Parties execution of this GIA, the Distribution Provider commenced work on the Distribution Provider's Interconnection Facilities pursuant to the Letter Agreement. In accordance with the Letter Agreement, this GIA will supersede the Letter Agreement upon the Effective Date, and Interconnection Customer's deposits made pursuant to the Letter Agreement will be credited to the amounts due under this GIA. Following the Effective Date of this GIA: (i) the $315,000 in cash deposits made by the Interconnection Customer pursuant to the Letter Agreement will be credited towards the Interconnection Facilities Payment under this Appendix A; and (ii) the $110,250 letter of credit provided by Interconnection Customer pursuant to the Letter

Agreement shall be applied toward the security amount due for the estimated tax liability pursuant to Section 11 of this Appendix A.

15. Distribution Upgrades Cost, Delivery Network Upgrade Cost, Interconnection Facilities Cost and Reliability Network Upgrade Cost Summary.

(a) Estimated Cost:

Element-	Interconnection Facilities Cost	Reliability Network Upgrades Cost	Distribution Upgrades Cost	Delivery Network Upgrades Cost	One-Time Cost	Total	ITCC*
Interconnection Facilities (Phase I Build)							
Interconnection Facilities	$315,000					$315,000	$110,250
Interconnection Facilities (Phase II Build)							
New 653 ACSR overhead conductor	$1,039,000					$1,039,000	$363,650
Substation Upgrades - 16 kV switchrack, circuit breaker, disconnect switches & line projection relays	$609,000					$609,000	$213,150
Transducer	$11,000					$11,000	$3,850
EH&S Support	$219,000					$219,000	$76,650
Distribution Upgrades							
Replace distribution & subtransmission poles, new vault & ducts			$1,642,000			$1,642,000	$574,700
EH&S Support			$352,000			$352,000	$123,200
Real Properties			$29,000			$29,000	$10,150
Reliability Network Upgrades		**$0**				**$0**	**$0**
Delivery Network Upgrades				**$0**		**$0**	**$0**
Total	**$2,193,000**	**$0**	**$2,023,000**	**$0**	**$0**	**$4,216,000**	**$1,475,600**

*Note: ITCC/Estimated Tax Liability will be provided pursuant to Appendix A, Section 11.

All amounts shown above are in nominal dollars.

(b) Actual Cost:

[TO BE INSERTED AFTER TRUE-UP OF ACTUAL COSTS]

Element	Interconnection Facilities Cost	Reliability Network Upgrades Cost	Distribution Upgrades Cost	Delivery Network Upgrades Cost	One-Time Cost	Total	ITCC
Total							

16. Interconnection Facilities Charge.

Interconnection Facilities Charge = Customer-Financed Monthly Rate x (Interconnection Facilities Cost)

		Estimated		Actual	
Effective	Customer-Financed Monthly Rate	Interconnection Facilities Cost	Interconnection Facilities Charge	Interconnection Facilities Cost	Interconnection Facilities Charge
As of the Phase I Build Interconnection Facilities Completion Date	0.38%	$315,000	$1,197.00	[to be inserted after true-up]	[to be inserted after true-up]
As of the Phase II Build Interconnection Facilities Completion Date	0.38%	$2,193,000	$8,333.40	[to be inserted after true-up]	[to be inserted after true-up]

17. Payment Schedule and Associated ITCC.

The payment amounts shown below are based on an estimate of the monthly incurred costs for the Distribution Upgrades, Distribution Provider's Interconnection Facilities, and Network Upgrades.

Payment No.	Payment Due Date	Interconnection Facilities Cost (Subject to ITCC) (A)	Distribution Upgrades Cost (Subject to ITCC) (B)	Total Payment Amount (C = A+B)	ITCC** (D = (A +B) *35%)
1a	PAID*	$315,000	$0	**$315,000**	**$110,250**
1b	9/1/12	$28,000	$41,000	**$69,000**	**$1,365,350**
2	10/1/12	$54,000	$77,000	**$131,000**	
3	11/1/12	$80,000	$112,000	**$192,000**	
4	12/1/12	$97,000	$115,000	**$212,000**	
5	1/1/13	$114,000	$126,000	**$240,000**	
6	2/1/13	$312,000	$323,000	**$635,000**	
7	3/1/13	$390,000	$400,000	**$790,000**	
8	4/1/13	$163,000	$169,000	**$332,000**	
9	5/1/13	$182,000	$187,000	**$369,000**	
10	6/1/13	$221,000	$225,000	**$446,000**	
11	7/1/13	$186,000	$193,000	**$379,000**	
12	8/1/13	$51,000	$55,000	**$106,000**	
Totals		$2,193,000	$2,023,000	**$4,216,000**	**$1,475,600**

*Payment 1a shown above has been credited from deposits paid pursuant to the Letter Agreement in accordance with Section 14(h) of this Appendix A.

All amounts shown above are in nominal dollars.

Distribution Upgrades Payment = (Distribution Upgrades Cost + associated One-Time Cost) = $2,023,000

Delivery Network Upgrades Payment = (Delivery Network Upgrades Cost + associated One-Time Cost) = $0

Interconnection Facilities Payment = (Interconnection Facilities Cost + associated One-Time Cost) = $2,193,000

Reliability Network Upgrades Payment = (Reliability Network Upgrades Cost + associated One-Time Cost) = $0

Transmission credits pursuant to Section 9 of this Appendix A = Reliability Network Upgrades Payment + Delivery Network Upgrades Payment = $0

**ITCC will be provided by Interconnection Customer in accordance with Section 11 of this Appendix A.

Appendix B to GIA

Milestones

1. **The Interconnection Customer's Selected Option:** Pursuant to Article 5.1 of the GIA, the Interconnection Customer has selected the Standard Option.

2. **Milestone Dates:**

Item	Milestone	Responsible Party	Due Date
(a)	Submit proof of insurance coverage in accordance with Article 18.3 of the GIA	Interconnection Customer	Within ten (10) Calendar Days of the execution of this GIA
(b)	For Phase II Build, submittal of written authorization to proceed with design and procurement of the Distribution Provider's Interconnection Facilities, Distribution Upgrades and Network Upgrades to the Distribution Provider, in accordance with Article 5.5.2 of the GIA	Interconnection Customer	Within thirty (30) Calendar Days of the Effective Date
(c)	Submittal of second posting of Interconnection Financial Security for the Distribution Provider's Interconnection Facilities, Distribution Upgrades and Network Upgrades to the Distribution Provider, pursuant to Section 5.9 of the GIP and Article 11.5 and Section 10 of Appendix A of the GIA	Interconnection Customer	Within one hundred twenty (120) Calendar Days after publication of the final Interconnection Facilities Study report: September 5, 2012
(d)	Submittal of third posting of Interconnection Financial Security for the Distribution Provider's Interconnection Facilities, Distribution Upgrades and Network Upgrades to the Distribution Provider, pursuant to Section 5.9 of the GIP and Article 11.5 and Section 10 of Appendix A of the GIA	Interconnection Customer	On or before the start of construction of Distribution Upgrades or Distribution Provider's Interconnection Facilities (whichever is earlier)
(e)	For Phase II Build, submittal of written authorization to proceed with construction to the Distribution	Interconnection Customer	Within thirty (30) Calendar Days of the Effective Date

	Provider, pursuant to Article 5.6.3 of the GIA		
(f)	Submittal of security for the estimated tax liability to the Distribution Provider, pursuant to Article 5.17.3 of the GIA	Interconnection Customer	Within thirty (30) Calendar Days of the Effective Date
(g)	Completion of the Distribution Provider's Interconnection Facilities for Phase I Build	Distribution Provider	August 31, 2012
(h)	Completion of the Distribution Provider's Interconnection Facilities for Phase II Build, Distribution Upgrades, and Network Upgrades	Distribution Provider	Within twelve (12) months following the Effective Date*
(i)	For Phase II Build, submittal of initial specifications for the Interconnection Customer's Interconnection Facilities and Generating Facility, including System Protection Facilities, to the Distribution Provider, pursuant to Article 5.10.1 of the GIA	Interconnection Customer	At least one hundred eighty (180) Calendar Days prior to the Initial Synchronization Date
(j)	For Phase II Build, submittal of initial information including the Distribution Provider's Transmission System information necessary to allow the Interconnection Customer to select equipment, in accordance with Article 24.2 of the GIA	Distribution Provider	At least one hundred eighty (180) Calendar Days prior to Trial Operation
(k)	For Phase II Build, submittal of updated information by the Interconnection Customer, including manufacturer information, in accordance with Article 24.3 of the GIA	Interconnection Customer	No later than one hundred eighty (180) Calendar Days prior to Trial Operation
(l)	For Phase II Build, review of and comment on the Interconnection Customer's initial specifications, pursuant to Article 5.10.1 of the GIA	Distribution Provider	Within thirty (30) Calendar Days of the Interconnection Customer's submission of initial specifications
(m)	For Phase II Build, submittal of final specifications for the Interconnection Customer's Interconnection Facilities and Generating Facility, including System Protection Facilities, to the	Interconnection Customer	At least ninety (90) Calendar Days prior to the Initial Synchronization Date.

	Distribution Provider, as specified in Article 5.10.1 of the GIA		
(n)	For Phase II Build, review of and comment on the Interconnection Customer's final specifications, pursuant to Article 5.10.1 of the GIA	Distribution Provider	Within thirty (30) Calendar Days of the Interconnection Customer's submission of final specifications
(o)	Notification of Balancing Authority Area to the Distribution Provider, pursuant to Article 9.2	Interconnection Customer	At least three (3) months prior to the Initial Synchronization Date
(p)	For Phase I Build, performance of a complete calibration test and functional trip test of the System Protection Facilities, pursuant to Article 9.7.4.6 of the GIA	Interconnection Customer and Distribution Provider	At least thirty (30) Calendar Days prior to the In-Service Date
(q)	For Phase II Build, performance of a complete calibration test and functional trip test of the System Protection Facilities, pursuant to Article 9.7.4.6 of the GIA	Interconnection Customer and Distribution Provider	At least sixty (60) Calendar Days prior to the In-Service Date
(r)	In-Service Date	Interconnection Customer	Phase I Build: August 31, 2012 Phase II Build: 12 months after Effective Date*
(s)	Initial Synchronization Date/Trial Operation for the Phase I Build	Interconnection Customer	August 31, 2012
(t)	Initial Synchronization Date/Trial Operation for the Phase II Build	Interconnection Customer	12 months after Effective Date*
(u)	For Phase I Build, testing of the Distribution Provider's Interconnection Facilities, Distribution Upgrades, and Network Upgrades, and testing of the Interconnection Customer's Interconnection Facilities and Generating Facility, all in accordance with Article 6.1 of the GIA	Interconnection Customer and Distribution Provider	At least thirty (30) Calendar Days prior to the Initial Synchronization Date
(v)	For Phase II Build, testing of the Distribution Provider's Interconnection Facilities, Distribution Upgrades, and Network Upgrades, and testing of the Interconnection Customer's Interconnection Facilities and	Interconnection Customer and Distribution Provider	At least sixty (60) Calendar Days prior to the Initial Synchronization Date

	Generating Facility, all in accordance with Article 6.1 of the GIA		
(w)	Provide written approval to the Interconnection Customer for the operation of the Phase I Build Generating Facility, in accordance with Article 6.1 of the GIA	Distribution Provider	At least fifteen (15) Calendar Days prior to the Initial Synchronization Date
(x)	Provide written approval to the Interconnection Customer for the operation of the Phase II Build Generating Facility, in accordance with Article 6.1 of the GIA	Distribution Provider	At least fifteen (15) Calendar Days prior to the Initial Synchronization Date
(y)	Commercial Operation Date for the Phase I Build	Interconnection Customer	August 31, 2012
(z)	Commercial Operation Date for the Phase II Build	Interconnection Customer	12 months after Effective Date*
(aa)	For Phase I Build, submittal to the Distribution Provider of "as-built" drawings, information and documents for the Interconnection Customer's Interconnection Facilities and the Electric Generating Units, in accordance with Article 5.10.3 of the GIA	Interconnection Customer	Within one hundred twenty (120) Calendar Days after the Commercial Operation Date, unless otherwise agreed
(ab)	For Phase II Build, submittal to the Distribution Provider of "as-built" drawings, information and documents for the Interconnection Customer's Interconnection Facilities and the Electric Generating Units, in accordance with Article 5.10.3 of the GIA	Interconnection Customer	Within one hundred twenty (120) Calendar Days after the Commercial Operation Date, unless otherwise agreed

* Note: The Interconnection Customer understands and acknowledges that such timeline is only an estimate and that equipment and material lead times, labor availability, outage coordination, regulatory approvals, right-of-way negotiations, or other unforeseen events could delay the actual in-service dates of the Distribution Provider's Interconnection Facilities, Distribution Upgrades, or Network Upgrades beyond those specified. The Distribution Provider shall not be liable for any cost or damage incurred by the Interconnection Customer because of any delay in the work provided for in this GIA.

If the Interconnection Customer suspends work pursuant to Article 5.16 of the GIA, then all milestones for each Party set forth in this Appendix B shall be suspended during the suspension period except for the milestones requiring posting of Interconnection Financial Security for the Network Upgrades common to multiple generating stations. Upon the Interconnection

Customer's request to recommence the work, the Parties shall negotiate in good faith new revised milestone dates for each milestone, taking into account the period of suspension and necessary re-studies, if required. Appendix B and any terms and conditions associated with the estimated costs and payment schedule, if necessary, shall be amended following the establishment of such revised milestone dates.

The Interconnection Customer also understands and agrees that the method of service required to interconnect the Generating Facility may require re-evaluation due to the suspension of the project and changes to the Distribution Provider's electrical system or addition of new generation.

Appendix C to GIA

Interconnection Details

1. **Generating Facility:** All equipment and facilities comprising the Houweling Nurseries Oxnard generating facility in Ventura County, Camarillo, California, as disclosed by the Interconnection Customer in its Interconnection Request, as may have been amended during the Interconnection Study process, which consists of (i) a 13.2 MW Reciprocating Engine generating facility, which includes three (3) Jenbacher synchronous generators, each rated at 4.4 MW, three (3) three-phase 5500 kVA 13.8/16 kV transformers and power factor correction equipment,, (ii) the associated infrastructure, (iii) meters and metering equipment, and (iv) appurtenant equipment. The Houweling Nurseries Oxnard Project shall consist of the Generating Facility and the Interconnection Customer's Interconnection Facilities.

2. **Interconnection Customer Operational Requirements:**

   (a) Pursuant to Article 9.4 of the GIA, the Interconnection Customer shall operate the Generating Facility and the Interconnection Customer's Interconnection Facilities in accordance with the ISO Tariff; NERC and the Applicable Reliability Council requirements; and Applicable Reliability Standards.

   (b) The Generating Facility shall be operated so as to prevent or protect against the following adverse conditions on the Distribution Provider's electric system: inadvertent and unwanted re-energizing of a utility dead line or bus; interconnection while out of synchronization; overcurrent; voltage imbalance; ground faults; generated alternating current frequency outside permitted safe limits; power factor or reactive power outside permitted limits; and abnormal waveforms.

3. **Interconnection Principles:**

   (a) This GIA provides for interconnection of a total capacity of 13.2 MW, resulting from the interconnection of the Houweling Nurseries Oxnard Project, as described in Section 1 of this Appendix C. The Interconnection Customer acknowledges that if the Interconnection Customer wishes to increase the amount of interconnection capacity provided pursuant to this GIA, the Interconnection Customer shall be required to submit a new Interconnection Request in accordance with the terms and conditions of the Tariff.

   (b) The costs associated with any mitigation measures required to third party transmission systems, which result from interconnection of the Houweling Nurseries Oxnard Project to the Distribution Provider's electrical system, are not reflected in this GIA. The Distribution Provider shall have no responsibility to pay costs associated with any such mitigation measures. If applicable, the Interconnection Customer shall enter into an agreement with such third parties in accordance with Section 10.4 of the GIP to address any required mitigation.

   (c) In the event the Distribution Provider's Interconnection Facilities are utilized to provide

retail service to the Interconnection Customer in addition to the wholesale Interconnection Service provided herein, and the Interconnection Customer fails to make payment for such retail service in accordance with the Distribution Provider's applicable retail tariffs, then the Distribution Provider's Interconnection Facilities may be removed from service to the Interconnection Customer, subject to the notice and cure provisions of such retail tariffs, until payment is made by the Interconnection Customer pursuant to such retail tariffs.

(d) Pursuant to Article 5.10.2 of the GIA, review by the Distribution Provider of the electrical specifications, design, construction, operation, or maintenance of the [Project Name] Project or the Interconnection Customer's Interconnection Facilities shall not constitute any representation as to the economic or technical feasibility, operational capability, or reliability of such facilities. The Interconnection Customer shall in no way represent to any third party that any such review by the Distribution Provider of such facilities, including, but not limited to, any review of the design, construction, operation, or maintenance of such facilities by the Distribution Provider, is a representation by the Distribution Provider as to the economic or technical feasibility, operational capability, or reliability of the Houweling Nurseries Oxnard Project or the Interconnection Customer's Interconnection Facilities.

(e) The Distribution Provider's approval process specified in Article 6.1 of the GIA will include verification that the low-voltage ride-through, SCADA capability, and power factor correction equipment, if any, required pursuant to Appendix H of this GIA, have been installed.

(f) The Interconnection Customer shall complete and receive approval for all environmental impact studies and any permitting necessary for the construction, operation and maintenance of the Houweling Nurseries Oxnard Project. The Interconnection Customer shall include the Distribution Provider's Interconnection Facilities, Distribution Upgrades and Network Upgrades described in Appendix A of this GIA in all such environmental impact studies, where applicable. The Interconnection Customer shall provide the results of such studies and approvals to the Distribution Provider for use in the Distribution Provider's application(s) to obtain the regulatory approvals required to be obtained by Distribution Provider for the construction, operation and maintenance of the, Distribution Provider's Interconnection Facilities, Distribution Upgrades and Network Upgrades described in Appendix A of this GIA.

(g) The Interconnection Customer is responsible for all costs associated with any necessary relocation of any of the Distribution Provider's facilities as a result of the Houweling Nurseries Oxnard Project and acquiring all property rights necessary for the Interconnection Customer's Interconnection Facilities, including those required to cross the Distribution Provider's facilities and property. The relocation of the Distribution Provider's facilities or use of the Distribution Provider's property rights shall only be permitted upon written agreement between the Distribution Provider and the Interconnection Customer. Any proposed relocation of the Distribution Provider's

facilities or use of the Distribution Provider's property rights may require a study and/or evaluation, the cost of which would be borne by the Interconnection Customer, to determine whether such use may be accommodated. The terms and conditions of any such use of the Distribution Provider's facilities or property rights would be the subject of a separate agreement and any associated costs to the Interconnection Customer would not be considered to be associated with a Network Upgrade or Distribution Upgrade and would not be refundable to the Interconnection Customer pursuant to Article 11.4 of this GIA.

(h) This GIA does not address any requirements for standby power or temporary construction power that the Generating Facility may require prior to the in-service date of the Interconnection Facilities. Should the Generating Facility require standby power or temporary construction power from the Distribution Provider prior to the in-service date of the Interconnection Facilities, the Interconnection Customer is responsible to make appropriate arrangements with the Distribution Provider to receive and pay for such retail service.

4. Cluster Study Group:

The Houweling Nurseries Oxnard Project will be included in the ISO's QC5 cluster to perform short circuit duty analysis on the ISO Grid in accordance with Section 5.8.1.1 of the GIP.

5. Interconnection Operations:

(a) The Interconnection Customer shall cause the Houweling Nurseries Oxnard Project to participate in any SPS required to prevent thermal overloads and unstable conditions resulting from outages. Such participation shall be in accordance with applicable FERC regulations, and ISO Tariff provisions and protocols. The Interconnection Customer will not be entitled to any compensation from the Distribution Provider, pursuant to the GIA, for loss of generation output when (i) the Generating Facility's generation is reduced or the Houweling Nurseries Oxnard Project is tripped off-line due to implementation of the SPS; or (ii) such generation output is restricted in the event the SPS becomes inoperable. In accordance with Good Utility Practice, the Distribution Provider will provide the Interconnection Customer advance notice of any required SPS beyond that which has already been identified in the Interconnection Studies and this GIA.

(b) The GIA governs the facilities required to interconnect the Generating Facility to Distribution Provider's electrical system pursuant to the Tariff and as described herein. Interconnection Customer shall be responsible for making all necessary operational arrangements with the ISO, including, without limitation, arrangements for obtaining transmission service from the ISO, and for scheduling delivery of energy and other services to the ISO Grid.

(c) The Interconnection Customer shall cause the Generating Facility to participate in ISO

congestion management.

(d) Following outages of the Interconnection Facilities or the Generating Facility, the Interconnection Customer shall not energize the Houweling Nurseries Oxnard Project for any reason without specific permission from the Distribution Provider's operations personnel. Such permission shall not be unreasonably withheld.

(e) The Interconnection Customer shall maintain operating communications with the Distribution Provider's designated switching center. The operating communications shall include, but not be limited to, system parallel operation or separation, scheduled and unscheduled outages, equipment clearances, protective relay operations, and levels of operating voltage and reactive power.

(f) The Interconnection Customer has elected for the Generating Facility to have Energy-Only Deliverability Status, as such term is defined in the ISO Tariff.

(g) The Distribution Provider may perform technical assessments when requested by the Interconnection Customer or directed by the ISO, at the Interconnection Customer's expense, to confirm if any of the facilities, upgrades or replacements identified in this GIA are still required to accommodate interconnection of the Houweling Nurseries Oxnard Project.

(h) In accordance with Article 5.12 of the GIA, the Interconnection Customer and Distribution Provider shall execute any necessary supplemental agreements, as determined by the Distribution Provider, to effectuate and record such easement(s) which provides the Distribution Provider unrestricted 24 hour access to Distribution Provider's Interconnection Facilities, and Distribution Upgrades, and Network Upgrades, if applicable, located on the Interconnection Customer's side of the Point of Change of Ownership for construction, operation, and maintenance.

(i) Compliance with Applicable Reliability Standards: The Interconnection Customer shall comply with all Applicable Reliability Standards for the Interconnection Customer's Interconnection Facilities and the Generating Facility. The Distribution Provider will not assume any responsibility for complying with mandatory reliability standards for such facilities and offers no opinion as to whether the Interconnection Customer must register with NERC. If required to register with NERC, the Interconnection Customer shall be responsible for complying with all Applicable Reliability Standards for the Interconnection Customer's Interconnection Facilities and the Generating Facility up to the Point of Change of Ownership, as described in Section 5 of Appendix A of this GIA.

Appendix D to GIA

Security Arrangements Details

Infrastructure security of Distribution System and Transmission System equipment and operations and control hardware and software is essential to ensure day-to-day Distribution System reliability and operational security. FERC will expect the ISO, all transmission providers, market participants, and interconnection customers interconnected to the Distribution System and Transmission System to comply with the recommendations offered by the President's Critical Infrastructure Protection Board and, eventually, best practice recommendations from the electric reliability authority. All public utilities will be expected to meet basic standards for system infrastructure and operational security, including physical, operational, and cyber-security practices.

Appendix E to GIA

Commercial Operation Date

This Appendix E is a part of the GIA between Distribution Provider and Interconnection Customer.

[Date]

Mr. William Law
Manager, Grid Contract Management
Southern California Edison Company
P. O. Box 800
2244 Walnut Grove Avenue
Rosemead, California 91770

Re: _____ Generating Facility

Dear _____:

On **[Date] [Interconnection Customer]** has completed Trial Operation of Unit No. ___. This letter confirms that [Interconnection Customer] commenced Commercial Operation of Unit No. ___ at the Generating Facility, effective as of **[Date plus one day]**.

Thank you.

[Signature]

[Interconnection Customer Representative]

Appendix F to GIA

Addresses for Delivery of Notices and Billings

1. General Notices:

Distribution Provider	Interconnection Customer
Manager, Grid Contract Management Southern California Edison Company P. O. Box 800 2244 Walnut Grove Ave, Rosemead, CA 91770	Casey Houweling Houweling Nurseries Oxnard 645 West Laguna Road Camarillo, CA 93012

2. Operating Communications and Notifications:

The Distribution Provider and the Interconnection Customer shall provide for operating communications through their respective designated representatives as follows:

The Parties agree to exchange the following information prior to the Initial Synchronization Date of each Electric Generating Unit:

Distribution Provider Southern California Edison Company	Interconnection Customer Houweling Nurseries Oxnard
Grid Control Center/24 Hour Telephone:	Richard Vanderburg, Energy & Water Conservation Mgr. Control Room Operator *24 Hour Telephone: 805-857-4948
	*Operation Center Fax. No.: 805-271-5107 *E-mail: richard.vanderburg@houwelings.com

Operational Matters, Force Majeure, and Outage Notices:

Distribution Provider	Interconnection Customer
Name/Title: Phone:	Richard Vanderburg, Energy & Water Conservation Mgr. 805-857-4948

For Emergencies:

Distribution Provider	Interconnection Customer
Name/Title: Phone:	Richard Vanderburg, Energy & Water Conservation Mgr. 805-857-4948

3. **Billing and Payments:**

Distribution Provider	Interconnection Customer
Accounts Receivable (GCM) Southern California Edison Company P. O. Box 800 Rosemead, CA 91771-0001	Peter Cummings 645 West Laguna Road Camarillo, CA 93012

4. **Alternative Forms of Delivery of Notices (telephone, facsimile or e-mail):**

Distribution Provider	Interconnection Customer
Manager, Grid Contract Management Southern California Edison Company Tel: (626) 302-9640 Fax: (626) 302-1152	Richard Vanderburg, Energy & Water Conservation Mgr. Tel: 805-857-4948 Fax: 805-271-5107

Appendix G to GIA

This Appendix G does not apply to the Interconnection Customer

Interconnection Customer's Proportional Share of Costs of Network Upgrades for Applicable Project Group

Note: The amounts shown above are in nominal dollars.

Appendix H to GIA

This Appendix H does not apply to the Interconnection Customer

INTERCONNECTION REQUIREMENTS FOR A WIND GENERATING PLANT

Appendix H sets forth requirements and provisions specific to a wind generating plant. All other requirements of this GIA continue to apply to wind generating plant interconnections.

A. Technical Standards Applicable to a Wind Generating Plant

i. Low Voltage Ride-Through (LVRT) Capability

A wind generating plant shall be able to remain online during voltage disturbances up to the time periods and associated voltage levels set forth in the standard below.

All wind generating plants subject to FERC Order No. 661 must meet the following requirements:

1. Wind generating plants are required to remain in-service during three-phase faults with normal clearing (which is a time period of approximately 4 – 9 cycles) and single line to ground faults with delayed clearing, and subsequent post-fault voltage recovery to prefault voltage unless clearing the fault effectively disconnects the generator from the system. The clearing time requirement for a three-phase fault will be specific to the wind generating plant substation location, as determined by and documented by the Distribution Provider. The maximum clearing time the wind generating plant shall be required to withstand for a three-phase fault shall be 9 cycles after which, if the fault remains following the location-specific normal clearing time for three-phase faults, the wind generating plant may disconnect from the electric system. A wind generating plant shall remain interconnected during such a fault on the electric system for a voltage level as low as zero volts, as measured at the high voltage side of the wind GSU.

2. This requirement does not apply to faults that would occur between the wind generator terminals and the high side of the GSU.

3. Wind generating plants may be tripped after the fault period if this action is intended as part of a special protection system.

4. Wind generating plants may meet the LVRT requirements of this standard by the performance of the generators or by installing additional equipment (e.g., Static VAr Compensator) within the wind generating plant or by a combination of generator performance and additional equipment.

5. Existing individual generator units that are, or have been, interconnected to the network at the same location at the effective date of the Appendix H LVRT Standard are exempt

from meeting the Appendix H LVRT Standard for the remaining life of the existing generation equipment. Existing individual generator units that are replaced are required to meet the Appendix H LVRT Standard.

ii. Power Factor Design Criteria (Reactive Power)

A wind generating plant shall maintain a power factor within the range of 0.95 leading to 0.95 lagging, measured at the Point of Interconnection as defined in this GIA, if the Distribution Provider's Interconnection Studies shows that such a requirement is necessary to ensure safety or reliability. The power factor range standard can be met by using, for example, power electronics designed to supply this level of reactive capability (taking into account any limitations due to voltage level, real power output, etc.) or fixed and switched capacitors if agreed to by the Distribution Provider, or a combination of the two. The Interconnection Customer shall not disable power factor equipment while the wind plant is in operation. Wind plants shall also be able to provide sufficient dynamic voltage support in lieu of the power system stabilizer and automatic voltage regulation at the generator excitation system if the Interconnection Studies shows this to be required for system safety or reliability.

iii. Supervisory Control and Data Acquisition (SCADA) Capability

The wind plant shall provide SCADA capability to transmit data and receive instructions from the Distribution Provider to protect system reliability. The Distribution Provider and the wind plant Interconnection Customer shall determine what SCADA information is essential for the proposed wind plant, taking into account the size of the plant and its characteristics, location, and importance in maintaining generation resource adequacy and electric system reliability in its area.

APPENDIX D

Appendix D: Instrumentation Specifications

Appendix – Instrumentation Specifications

- Dresser Roots Rotary Gas Flow Meter
- Dwyer RTD
- Emerson Coriolis Gas Flow Meter
- Endress+Hauser Electromagnetic Flow Meter
- Landis+Gyr Current Transducer
- Onicon Liquid Flow Meter
- Ohio Semitronics Current Transducer
- Priva T+RH RTD & Psychrometer
- Priva RTD
- Siemens Metering Transformer

SERIES B3: 38M175 ROOTS® Meter

	UNITS	Imperial	UNITS	Metric
Temperature Range	deg. F	-40 to +140	deg. C	-40 to +60
Base Rating (Q Max.)	acfh	38000	m^3/h	1050
Max. Operating Pressure (MAOP)	psig	175	kPa	1200
Leak Test (125% MAOP)	psig	219	kPa	1510
Static Test (2 x MAOP)	psig	350	kPa	2400
Rangeability +/- 1%	ratio	90:1	ratio	90:1
Rangeability +/- 2%	ratio	110:1	ratio	110:1
Start Rate	cfh	27	m^3/h	0,7646
Stop Rate	cfh	20	m^3/h	0,5663
Flow Rate @ 0.5" w.c., Gas	cfh	20600	m^3/h	583,3
Avg. Differential, 100% Flow	in. w.c.	1.9	mbar	4,7
Max. Pressurization Rate	psig/sec	5	kPa/sec	35
Max. Operating Speed	rpm	1140	rpm	1140
Gear Ratio	ratio	180:1	ratio	63,5771:1
Displaced Volume/Revolution	cf	0.555556	m^3	0,015723
Drive Rate, CD	cf/rev	100	m^3/rev	1
Min. Odometer Reading	cf	2.0	m^3	0,02
Odometer Turnover	yrs.	3.0	yrs.	1,1
Nominal Pipe Size	in.	6	mm	150
Flange-to-Flange	in.	18	mm	457,2
Flange Connection	ANSI	150#FF	ANSI	150#FF
Bolts per Flange	qty.	8	qty.	8
Bolt Size[1]	in.	3/4 - 10	in.	3/4 - 10
Flange Bolt Hole Depth	in.	1-5/8	mm	41,2
Bolt Torque: Lubricated/Non-Lub.	ft.-lb.	80	N-m	108
Restricting Orifice (120%)	in.	1-29/32	mm	48,419
Oil Capacity - Side Inlet	oz.	40.2	ml	1189
Oil Capacity - Top Inlet	oz.	154	ml	4554
Counter Version (CTR)[2]				
Net Weight	lbs.	244	kg	110,7
Shipping Weight	lbs.	274	kg	124,3
Carton Size	in.	44 x 24 x 21-3/4	cm	111 x 61 x 55
Counter with Instrument Drive (CD)[2]				
Net Weight	lbs.	247	kg	112,0
Shipping Weight	lbs.	277	kg	125,7
Carton Size	in.	44 x 24 x 21-3/4	cm	111 x 61 x 55

NOTES:
[1] Bolt Length varies by application.
[2] Weights and dimensions available for CPS upon request.

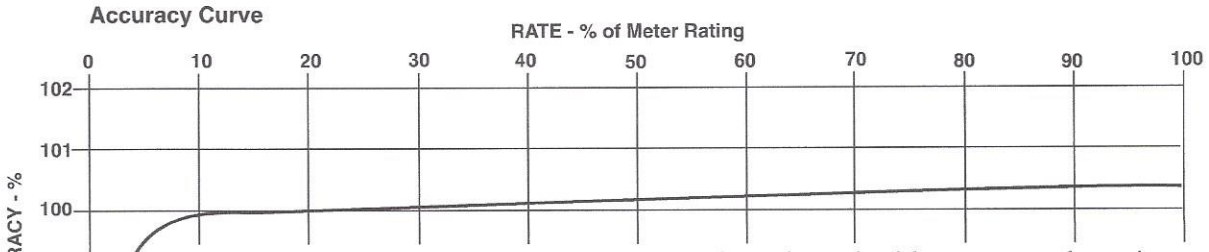

Model	38M175
Body Type	Series B
Start Rate	27 cfh
Stop Rate	20 cfh
Rangeability ±1%	90:1
Rangeability ±2%	110:1

Above data has been determined from tests performed with air at atmospheric pressure and ambient temperature, using positive displacement bell or piston provers dimensionally traceable to the United States National Institute of Standards and Technology (NIST) and traceable to NMi - Netherlands Measurements Institute for volumetric flow rate.

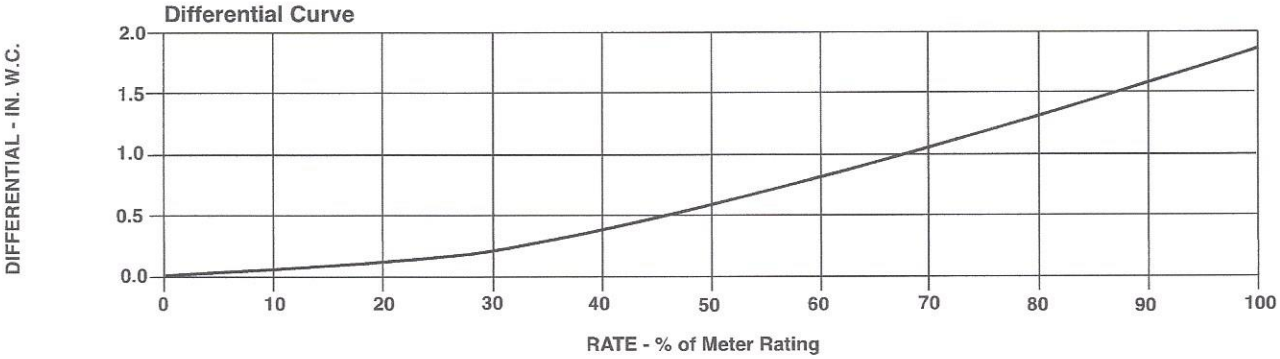

38M175 Series B3	Overall Length inches	Overall Length mm	Overall Height inches	Overall Height mm	Width (Flange/Flange) inches	Width (Flange/Flange) mm	Centerline to Accessory End (CL-AU) inches	Centerline to Accessory End (CL-AU) mm	Request Detailed Drawing Number
CTR	34-5/8	879	18	457	18	457	14-25/32	375	D054750-001
CD	38-3/16	967	18	457	18	457	23-7/32	590	D054433-001
ICPW/ ITPW/ICEX	36-11/32	923	18	457	18	457	21-3/8	453	D057701-000
IMCW2	39	991	18	457	18	457	24-1/32	610	D057732-000

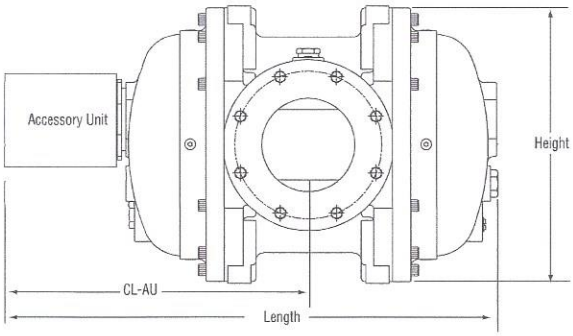

To order

Specify: Meter Series, Size and Type (i.e., ROOTS Meter Series B3 38M175 CD).

For CD, specify Inlet (Top or Side) and ID Rotation (CW-B or CCW-A).

For Pulser, specify Single or Dual Connectors and Connector Type (MS Circular, Conduit or Cable Gland).

For more specific ordering information on the electronic products, request: TS:SSP or TS:IMCW2.

Contact the factory for other available information, options, or special requests.

Roots Meters & Instruments
Dresser, Inc.
16240 Port Northwest Drive
Houston, Texas 77041-2645 USA
Inside US Ph: 800.521.1114 Fax: 800.335.5224
Outside US Ph: 832.590.2303 Fax: 832.590.2494

DRESSER Roots

www.dresser.com

©2008 Dresser, Inc.
Roots and Dresser are registered trademarks of Dresser, Inc.

Dwyer

Series TTE Explosion-Proof RTD Temperature Transmitter

User Selectable Ranges, Optional LCD Display

View All Product Images

SHARE

The Series TTE Explosion-Proof RTD Temperature Transmitter is the ideal product for hazardous temperature measurement applications. The TTE series has seven pre-programmed temperature ranges that are selectable via an internal dip switch. For those applications that need a custom range, the transmitter can be easily configured for any range between -30 to 250°F with a minimum span of 40°F. The span and zero can be quickly adjusted with a simple push button design. The compact housing allows for the transmitter to be mounted in virtually any application.

Ordering | Specifications | Literature | Approvals | Drawings | Accessories | Videos | Related Products

Specifications

Temperature Sensor:	Pt1000, 0.00385 DIN.
Output Temperature Ranges:	User selectable - any range between -30 to 250°F with a minimum span of 40°F.
Temperature Limits:	Ambient: 0 to 158°F (-18 to 70°C); Process: -30 to 250°F (-34.4 to 121.1°C).
Accuracy:	Transmitter: ±0.1% F.S.; Probe: ±0.3% F.S.
Thermal Drift Effects:	±0.02%/°C max.
Response Time:	250 ms.
Wetted Materials:	316 Stainless Steel.
Process Connection:	1/2" male NPT.
Conduit Connection:	1/2" female NPT.
Probe Length:	2" to 18" (depending on model).
Pressure Limits:	2000 psi (137.9 bar).
Power Requirements:	10 to 35 VDC.
Output Signal:	4-20 mA (two wire loop powered).
Optional Display:	2 Lines X 8 Character LCD.
Enclosure Rating:	Weatherproof and Explosion-proof for Class I, Groups B, C, D; Class II, Groups E, F, G; Class III.
Weight:	2 lb 8 oz (1134 g).
Agency Approvals:	CE, FM.

P/N MMI-20015780, Rev. AA
September 2009

Micro Motion® Model 1700 Transmitters
with Analog Outputs

Configuration and Use Manual Supplement

1700*A**

Configuration | Operation | Maintenance

Micro Motion

EMERSON
Process Management

2-WIRE CORIOLIS METERS
CNG050 CORIOLIS METERS
ELITE PEAK PERFORMANCE
F-SERIES HIGH PERFORMANCE COMPACT DRAINABLE
H-SERIES HYGIENIC COMPACT DRAINABLE
LF-SERIES EXTREME LOW-FLOW
MODEL D CORIOLIS FLOW AND DENSITY METERS
R-SERIES GENERAL PURPOSE FLOW
T-SERIES STRAIGHT TUBE FULL-BORE

F-Series High Performance Compact Drainable Coriolis Flow a Density Meters

Best flow and density measurement in a compact, drainable flow meter

- Superior sensitivity in a compact design to reduce variability in process control
- Cleanable self-draining design enables fast product change-over

Broadest range of application coverage

- Available with FMT transmitter for fast-fill dosing and batch applications
- 2-wire loop-powered option for installation simplification
- Supports Wireless THUM, PROFIBUS-DP, and DeviceNet protocols for maximum operational versatility
- Stainless steel or nickel alloy construction and high temperature and pressure opt a variety of process fluids and conditions
- NAMUR NE 132 compliant flange options for standardized lay length (face to face

Superior reliability and safety

- Smart Meter Verification for quick, complete meter diagnosis without process inter

Now with Smart Meter Verification, F-Series meters deliver outstanding reliability and eas for critical applications. F-Series meters are available with either stainless steel or nickel- wetted parts, allowing you to choose the material that is most compatible with your proces And certain F-Series models are available for high-temperature and high-pressure applica

Useful Links

- Sensor & Transmitter Compatibility Chart
- Transmitter Feature Comparison Chart

The F-Series Flow & Density Meters are compatible with the following transmitter

- 1500 and 2500 Compact Control Room
- 1700 and 2700 Field and Integral Mount
- 2200S Compact Integral 2-Wire
- 2400S Compact Integral
- 3300 and 3350 Frequency-Input Controller

2-WIRE CORIOLIS METERS
CNG050 CORIOLIS METERS
ELITE PEAK PERFORMANCE
F-SERIES HIGH PERFORMANCE COMPACT DRAINABLE
H-SERIES HYGIENIC COMPACT DRAINABLE
LF-SERIES EXTREME LOW-FLOW
MODEL D CORIOLIS FLOW AND DENSITY METERS
R-SERIES GENERAL PURPOSE FLOW
T-SERIES STRAIGHT TUBE FULL-BORE

F-Series High Performance Compact Drainable Coriolis Flow a Density Meters

Best flow and density measurement in a compact, drainable flow meter

- Superior sensitivity in a compact design to reduce variability in process control
- Cleanable self-draining design enables fast product change-over

Broadest range of application coverage

- Available with FMT transmitter for fast-fill dosing and batch applications
- 2-wire loop-powered option for installation simplification
- Supports Wireless THUM, PROFIBUS-DP, and DeviceNet protocols for maximum operational versatility
- Stainless steel or nickel alloy construction and high temperature and pressure opt a variety of process fluids and conditions
- NAMUR NE 132 compliant flange options for standardized lay length (face to face

Superior reliability and safety

- Smart Meter Verification for quick, complete meter diagnosis without process inte

Now with Smart Meter Verification, F-Series meters deliver outstanding reliability and eas for critical applications. F-Series meters are available with either stainless steel or nickel- wetted parts, allowing you to choose the material that is most compatible with your proce And certain F-Series models are available for high-temperature and high-pressure applic

Useful Links

- Sensor & Transmitter Compatibility Chart
- Transmitter Feature Comparison Chart

The F-Series Flow & Density Meters are compatible with the following transmitter:

- 1500 and 2500 Compact Control Room
- 1700 and 2700 Field and Integral Mount
- 2200S Compact Integral 2-Wire
- 2400S Compact Integral
- 3300 and 3350 Frequency-Input Controller

The F-Series Flow & Density Meters are compatible with the following transmitter:

- 1500 and 2500 Compact Control Room
- 1700 and 2700 Field and Integral Mount
- 2200S Compact Integral 2-Wire
- 2400S Compact Integral
- 3300 and 3350 Frequency-Input Controller

DocumentationFeatures & BenefitsSpecificationsApplications

BRIEF SPECIFICATIONS*	
Mass flow accuracy	+/-0.10% to 0.20% of flow rate
Volume flow accuracy	+/-0.15% to 0.30% of flow rate
Gas flow accuracy	+/-0.50% of flow rate
Density accuracy	+/-0.001 to 0.002 g/cc (+/1.0 to 2.0 kg/m^3)
Wetted parts	Stainless Steel 316L or Nickel Alloy C-22
Temperature rating	Standard: -150° to 400° F (-100° to 204° C) High Temperature**: -40° to 662° F (-40° to 350° C)
Pressure rating***	1450 psi (100 bar) Stainless Steel 316L 2160 psi (148 bar) Nickel Alloy C-22

F-SERIES MODEL	NOMINAL LINE SIZE		MAXIMUM FLOW RATE	
	English Units	Metric Units	English Units	Metric Units
F025**	1/4 to 1/2 inch	6 to 13 mm	100 lb/min	2720 kg/h
F050**	1/2 to 1 inch	13 to 25 mm	300 lb/min	8160 kg/h
F100**	1 to 2 inch	25 to 50 mm	1200 lb/min	32,650 kg/h
F200	2 to 3 inch	50 to 75 mm	3200 lb/min	87,100 kg/h
F300	3 to 4 inch	75 to 100 mm	10,000 lb/min	272,160 kg/h

** Listed specifications may vary with sensor or transmitter model.*
*** High temp available in three sizes*
**** Higher pressure versions are available. Refer to Product Data Sheet for details.*

Technical
Information
TI 043D/06/en
No. 50093117

Electromagnetic Flow Measuring System

promag 30 (Model '99)

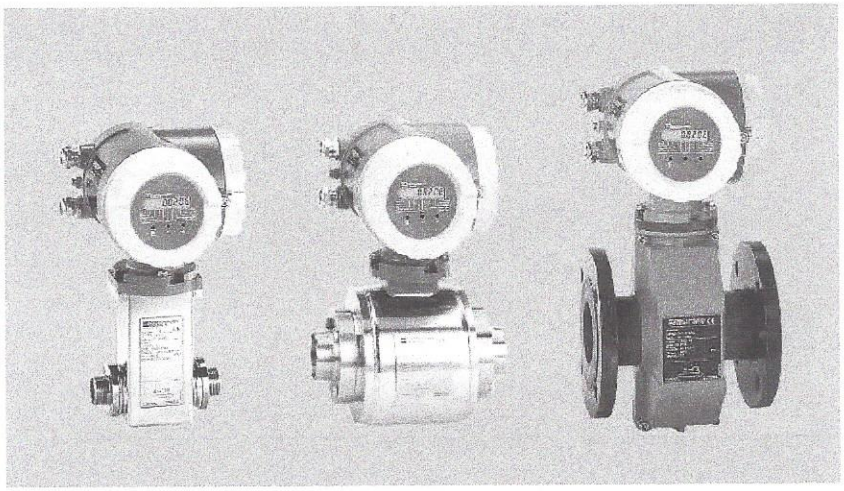

Flexible System
- Wide choice of materials for process connections and measuring tube linings, compatible to the fluid
- Transmitter housing and display can be rotated to fit the orientation

Operational Security
- ISO 9001 manufacturer
- High electromagnetic compatibility (EMC)
- High operating integrity through self-monitoring
- Data protection with EEPROM on power failure (without batteries)
- Auxiliary input for Positive Zero Return (PZR) and totalizer reset
- Empty Pipe Detection (EPD)

Easy to Operate
- Local display: all important variables easily read off
- E+H operating matrix: instrument functions easily configurable

Measure Precisely
- Measuring error: ± 0.5% or ± 0.2%
- 1000:1 operable flow range
- Excellent repeatability

Install Anywhere
- Robust, shock-resistant aluminium housing, resistant to acids and caustics
- IP 67 protection for compact and remote versions (optional IP 68 sensor)
- Wide size range DN 2...2000 ($^1/_{12}$...78")
- Flanged version with ISO meter lengths
- Modular, hygienic sensor for food and pharmaceutical applications
- Ex versions for use in Ex Zones 1 and 2

Endress+Hauser
Nothing beats know-how

Output variables (continued)	
Signal on alarm	• Current output: The current is set to a defined value • Pulse output: no signal supplied • Status output: on "Error" → not conducting (open) on "Flow direction" → last status held (forward → not conducting; backward → conducting)
Load	$R_L < 700\ \Omega$ (current output)
Creep suppression	Switch-on point at v = 0.02 m/s Switch-off point at v = 0.04 m/s Function can be switched off.
Accuracy	
Reference conditions	According to DIN 19200 and VDI/VDE 2641: Fluid temperature +28 °C ± 2 K Ambient temperature +22 °C ± 2 K Warm up period 30 minutes *Mounting:* – Inlet section > 10 x DN – Outlet section > 5 x DN – Transmitter and sensor are grounded. – The sensor is build-in centered into the piping.
Measured error	Pulse output: ± 0.5% o.r. ± 0.01% o.f.s. (full scale value = 10 m/s) Current output: additionally ± 10 µA (typical) 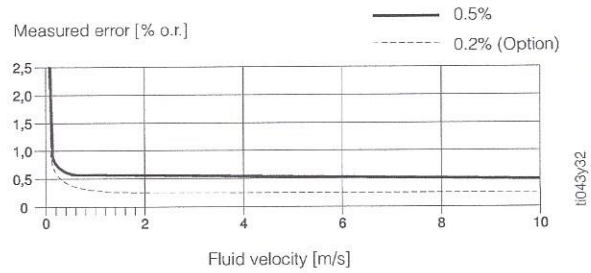 *Option:* Promag 30 A and F: ± 0.2% o.r. ± 0.05% of Q_k Q_k = desired reference flow quantity for calibration (v = 2...10 m/s). Q_k has to be noted for ordering. Deviations in power supply voltage have no influence on the specified ranges.
Repeatability	± 0.1% o.r. ± 0.005% o.f.s. o.r. = of reading o.f.s. = of max. full scale value (see table on page 5)

E850 MAXsys Elite

Grid Metering for Today Built on a Solid Foundation of Proven Technology

The MAXsys Elite Power and Energy Revenue Meter is designed to provide unparalleled flexibility in meeting the dynamic requirements of high-end, precision metering used for Generation, Transmission and Industrial applications.

The Elite meter is designed around the most time-proven metering platform in its class, the highly successful MAXsys 2510 and the Quad 4+ metering platforms. While originating from a rich energy metering history, the Elite meter has evolved into an intelligent, multi-faceted device loaded with new enhancements in the areas of power quality, communications, customization and ease of use.

Advanced Power Quality

The Elite's advanced power quality features enable the utility to collect more power quality information at the point of delivery and provide that information to the end customer. The meter features waveform capture, individual harmonic capture, multiple levels of sags and swells, site diagnostics and much more. These new tools allow the utility to monitor their own service, improve the class of service provided to the end customer, and provide notifications of PQ events to the utility and directly to the end customer. Sharing power quality data is simplified with the addition of a PQDIF file format export feature.

Versatile Communications

In order to address the sophisticated demands of today's "smart grid" environment, a grid meter must be versatile in its ability to distribute information and communicate to other intelligent devices. Elite meters support two industry standard protocols simultaneously from the same meter: DNP 3.0 level 2 and Modbus RTU. The Elite features a total of eight high speed communications ports. An Ethernet port under glass, internal 56K modem, and peer to peer communication using a 20 mA current loop round out the Elite's extensive communications options.

Flexible, Yet Easy to Use

The Elite allows you to customize each meter to fit the exact needs of your end customers by providing soft key upgrade functionality. Soft keys provide flexibility to enable or disable functionality in the meter, including only those features desired for a specific application. The Elite meter is also designed for very easy set up without compromising flexibility. The large graphical LCD and front panel navigation allow the user to diagnose wiring and service issues from the front panel display.

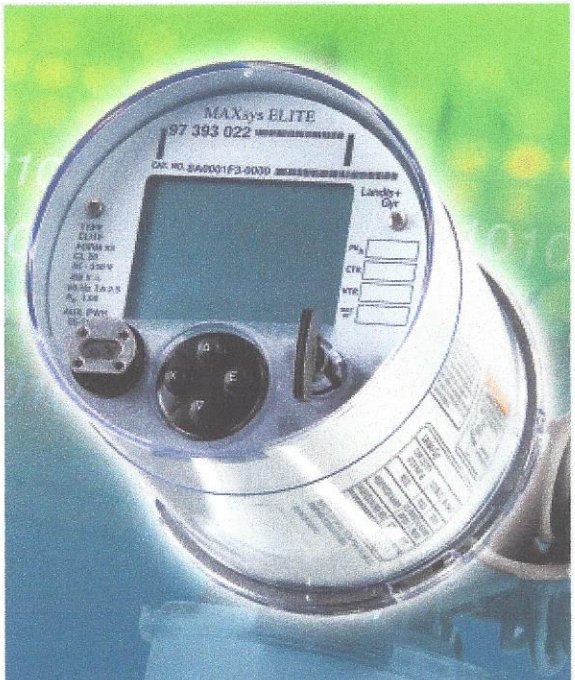

Optional Features:

- Internal 56K baud modems
- 8 auxiliary inputs available
- An additional 8 KYZ outputs are available (for total of 12)
- On-board SCADA protocols (assign to any communication port)
- Up to eight independent Analog Output channels are available
- Instrument transformer (IT) corrections
- IRIG-B port for GPS time synch
- Ethernet port under glass
- Advanced Power Quality features
- Real time peer to peer communications
- Dual 16 channel data recorders

Landis+Gyr
manage energy better

Specifications

Accuracy	Class 0.2%, ANSI C12.20
Communications	Two RS232 ports and two RS232/RS485 software configurable ports (Up to 115K baud). Optical port, 20mA current loop port for peer to peer communications, internal modem (56K or 1200 baud), Ethernet port under glass, and IRIG-B port for GPS time synchronization
Communications Protocols	Proprietary Type 7, DNP 3.0 level 2, Modbus
Burden	**Current Circuit Burden:** Less than 0.015 VA at test current
	Voltage Circuit Burden: Meter electronics less than 10VA max on one phase or aux power input. Less than 0.18VA per phase; 6VA aux power burden (for display); 7.2VA when charging battery
Power Supply	**Low Range**—AC line from 40 to 160 Vac; Aux power DC voltage from 40 to 160 Vdc
	High Range—AC line from 85 to 330 Vac; Aux power DC voltage from 90 to 300 Vdc
Frequency	60 Hz operation; optional 50 Hz
ANSI Forms	Socket base forms: 9/8, 35, 36, 26, and 10; Short switchboard style meters are available in 3 element configurations only (type 9)
Current Class	20 (5A), 10 (5A), and 2 (1A)
Starting Load	0.002 amps for class 20 meters; 0.001 amps for class 10 meters; 0.00025 amps for class 2 meters
Operating Temperature	Temperature Coefficient: +/-25ppm per C° Temperature Range: -40 to +85 C° (-40 to +185 F°) inside meter; LCD operational from –20 to +70 C° (-4 to +158 F°)
Relative Humidity Range	≤95% relative humidity, non-condensing
Time Base	Synchronized to 60Hz line frequency in U.S., stable to +/-0.002% per month to insure +/- 1 minute per month accuracy. Crystal time base is accurate to ±1 minute/year from 0 to 40°C and ±4 minutes/year from -40 to +85°C. GPS time synchronization is also available through an IRIG-B port
Graphical Display	320x240 graphical LCD module; Viewing area 78.78 x 59.58mm; operating temperature: -20 to +70 C°; Graphical representations of power quality data, vector diagrams, communication ports and various other information is available on the graphical display
Outputs	Up to (12) form C solid state outputs; 200VAC or DC; 100mA
Inputs	(8) opto isolated form A auxiliary (status/pulse) inputs; 10-15VDC
Massive Memory	512KB storage for each (2) load profile recorder; 28MB available for PQ event storage; 4 MB of SRAM

2800 Duncan Road
Lafayette, IN 47904 U.S.A
Phone: **765.742.1001** • Tech Support: **800.777.2774**
FAX: **765.429.0936**
www.landisgyr.com

Landis+Gyr
manage energy better

© 2009 Landis+Gyr 8/27/09

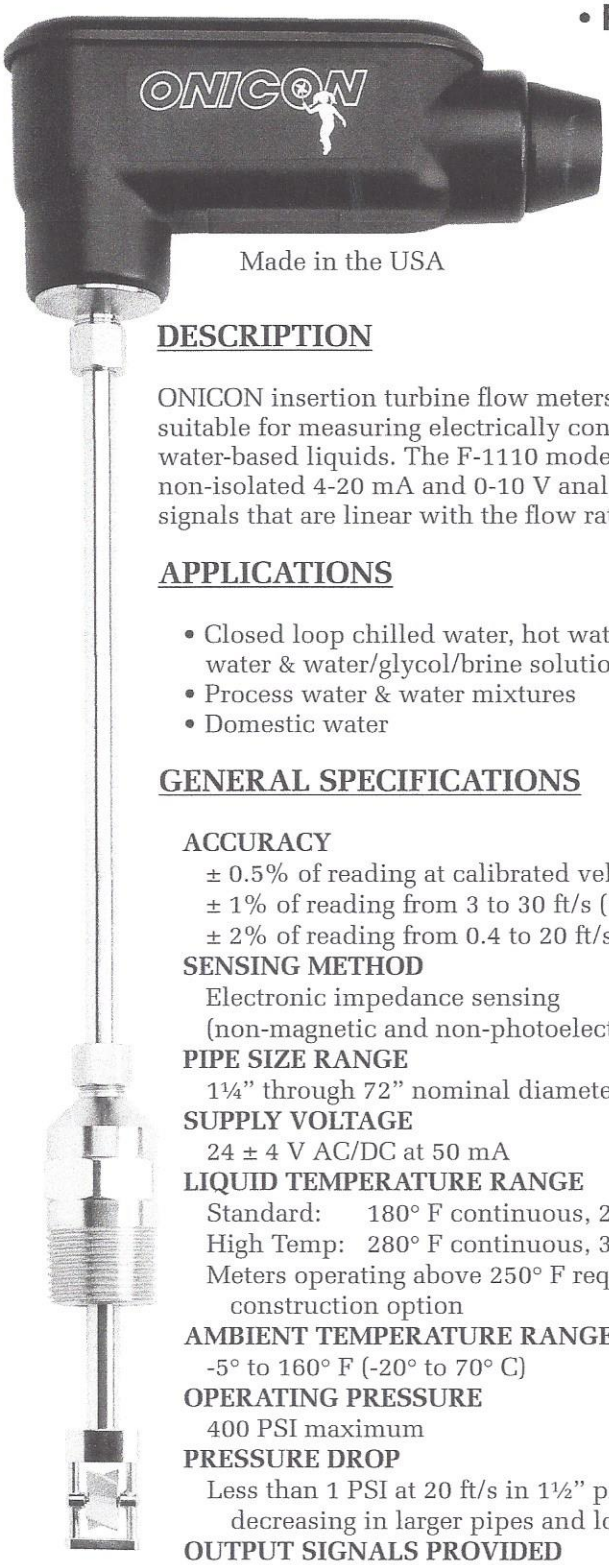

• F-1110 SINGLE TURBINE •
INSERTION FLOW METER
ANALOG OUTPUT

ONICON INCORPORATED

Made in the USA

DESCRIPTION

ONICON insertion turbine flow meters are suitable for measuring electrically conductive water-based liquids. The F-1110 model provides non-isolated 4-20 mA and 0-10 V analog output signals that are linear with the flow rate.

APPLICATIONS

- Closed loop chilled water, hot water, condenser water & water/glycol/brine solutions for HVAC
- Process water & water mixtures
- Domestic water

GENERAL SPECIFICATIONS

ACCURACY
± 0.5% of reading at calibrated velocity
± 1% of reading from 3 to 30 ft/s (10:1 range)
± 2% of reading from 0.4 to 20 ft/s (50:1 range)

SENSING METHOD
Electronic impedance sensing
(non-magnetic and non-photoelectric)

PIPE SIZE RANGE
1¼" through 72" nominal diameter

SUPPLY VOLTAGE
24 ± 4 V AC/DC at 50 mA

LIQUID TEMPERATURE RANGE
Standard: 180° F continuous, 200° F peak
High Temp: 280° F continuous, 300° F peak
Meters operating above 250° F require 316 SS construction option

AMBIENT TEMPERATURE RANGE
-5° to 160° F (-20° to 70° C)

OPERATING PRESSURE
400 PSI maximum

PRESSURE DROP
Less than 1 PSI at 20 ft/s in 1½" pipe, decreasing in larger pipes and lower velocities

OUTPUT SIGNALS PROVIDED
Analog Outputs (non-isolated)
Voltage output: 0-10 V (0-5 V available)
Current output: 4-20 mA
Frequency Output
0 – 15 V peak pulse, typically less than 300 Hz

(continued on back)

CALIBRATION

Every ONICON flow meter is wet calibrated in a flow laboratory against primary volumetric standards that are directly traceable to N.I.S.T. A certificate of calibration accompanies every meter.

FEATURES

Unmatched Price vs. Performance - Custom calibrated, highly accurate instrumentation at very competitive prices.

Excellent Long-term Reliability - Patented electronic sensing is resistant to scale and particulate matter. Low mass turbines with engineered jewel bearing systems provide a mechanical system that virtually does not wear.

Industry Leading Two-year "No-fault" Warranty - Reduces start-up costs with extended coverage to include accidental installation damage (miswiring, etc.) Certain exclusions apply. See our complete warranty statement for details.

Simplified Hot Tap Insertion Design - Standard on every insertion flow meter. Allows for insertion and removal by hand without system shutdown.

OPERATING RANGE FOR COMMON PIPE SIZES
0.17 TO 20 ft/s

±2% accuracy begins at 0.4 ft/s

Pipe Size (Inches)	Flow Rate (GPM)
1 ¼	0.8 - 95
1 ½	1 - 130
2	2 - 210
2 ½	2.5 - 230
3	4 - 460
4	8 - 800
6	15 - 1,800
8	26 - 3,100
10	42 - 4,900
12	60 - 7,050
14	72 - 8,600
16	98 - 11,400
18	120 - 14,600
20	150 - 18,100
24	230 - 26,500
30	360 - 41,900
36	510 - 60,900

1500 North Belcher Road, Clearwater, FL 33765 • Tel (727) 447-6140 • Fax (727) 442-5699
www.onicon.com • sales@onicon.com

F-1110 SPECIFICATIONS cont.

MATERIAL

Wetted metal components:

Standard: Electroless nickel plated brass

Optional: 316 stainless steel

ELECTRONICS ENCLOSURE

Standard: Weathertight aluminum enclosure

Optional: Submersible enclosure

ELECTRICAL CONNECTIONS

3-wire for frequency output

Standard: 10' of cable with ½" NPT conduit connection

Optional: Indoor DIN connector with 10' of plenum rated cable

ALSO AVAILABLE

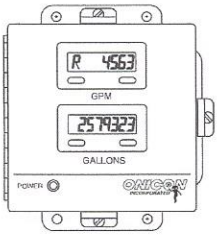

Display Modules

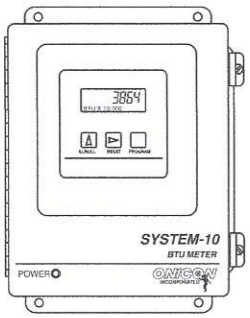

Btu Measurement Systems

F-1110 Wiring Information

WIRE COLOR	DESCRIPTION	NOTES
RED	(+) 24 V AC/DC supply voltage, 50 mA	Connect to power supply positive
BLACK	(-) Common ground (Common with pipe ground)	Connect to power supply negative & analog input ground
GREEN	(+) Frequency output signal: 0-15 V peak pulse	Required when meter is connected to local display or Btu meter
BLUE	(+) Analog signal: 4-20 mA (non-isolated)	Both signals may be used independently.
BROWN	(+) Analog signal: 0-10 V (non-isolated)	

F-1110 Wiring Diagram

Flow meter into control system (no display or Btu meter)

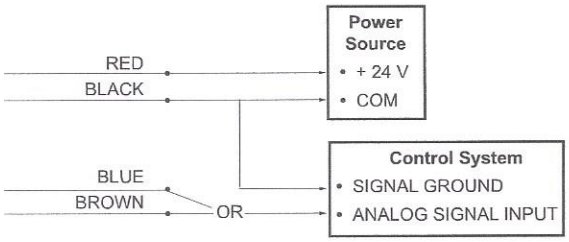

NOTE: ***1. Black wire is common with the pipe ground (typically earth ground).***
2. Frequency output required for ONICON display module or Btu meter, refer to wiring diagram for peripheral device.

Typical Meter Installation

(New construction or scheduled shutdown)

- Acceptable to install in vertical pipe
- Position meter anywhere in upper 240° for horizontal pipe

Horizontal Run Pipe

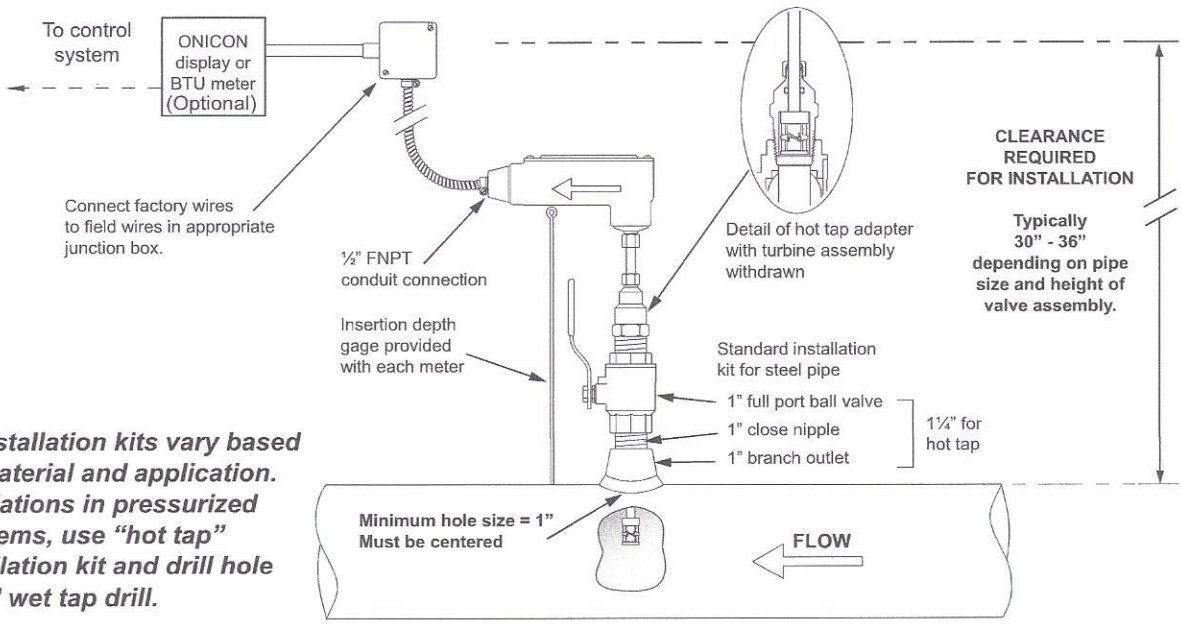

NOTE: Installation kits vary based on pipe material and application. For installations in pressurized (live) systems, use "hot tap" 1¼" installation kit and drill hole using a 1" wet tap drill.

1500 North Belcher Road, Clearwater, FL 33765 • Tel (727) 447-6140 • Fax (727) 442-5699

www.onicon.com • sales@onicon.com

OSI AC WATT/WATTHOUR TRANSDUCER MODEL W-/W4-

INCLUDES PHASE-FIRED & ZERO-CROSSING MEASUREMENTS

DESCRIPTION

Model W transducers are available in many models covering 0-600 Volts and 0-1000 Amperes. One-, two- & three-element transducers are available for all single-phase and three-phase power systems.

All models provide an isolated analog output signal related to the average power consumed in the load and/or relay closure (or pulse output) related to the Watthours of energy consumed in the load.

Computers or auxiliary equipment can be used to calculate demand, monitor or control processes, and to accumulate energy consumption for billing purposes.

FEATURES

- Analog output for instantaneous Watts and relay closure or pulse output for Watthour consumption.
- Maintains accuracy with chopped or distorted wave-forms through use of real-time multiplier.
- Accuracy maintained when factory-calibrated with external current sensors.
- Rugged metal enclosures for harsh environments.

APPLICATIONS

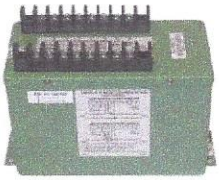

- Building energy management systems
- Manufacturing process control
- Pump motor power consumption.
- Welding and soldering process monitoring.
- Battery charger monitoring.

5 YEAR WARRANTY

ORDERING INFORMATION

Example: Self-Powered, Three-Phase, Four-Wire, 120V, 5A Input with 0-5Vdc Output Proportional to 0-1500 Watts, TTL Pulse Output for Watthours, each Pulse Proportional to 1.0 Watthour

W-007CX5-T

400Hz Models: To order for use on 400Hz applications, substitute **"W4-"** for **"W-"** in model number.

MODEL SELECTION

SINGLE-PHASE, TWO-WIRE (ONE-ELEMENT) MODELS WITH INTERNAL CURRENT SENSOR

INPUTS		F.S. WATTS	F.S. COUNTS PER HOUR	WH PER COUNT	STANDARD OUTPUT MODEL W- OR W4-						
AC VOLTS	AC AMPS				0-±1mA*	0-±1mA	0-±10V*	0-±10V	0-±5V*	0-±5V	4-20mA
0-150	0 - 1	100	100	1	103A	103B	103C	103D	103CX5	103X5	103E
	0 - 2.5	250	250	1	106A	106B	106C	106D	106CX5	106X5	106E
	0 - 5	500	5000	1	001A	001B	001C	001D	001CX5	001X5	001E
	0 - 10	1000	1000	1	010A	010B	010C	010D	010CX5	010X5	010E
	0 - 15	1500	1500	1	019A	019B	019C	019D	019CX5	019X5	019E
	0 - 20	2000	2000	1	117A	117B	117C	117D	117CX5	117X5	117E
	0 - 25	2500	2500	1	118A	118B	118C	118D	118CX5	118X5	118E
0-300	0 - 1	200	200	1	104A	104B	104C	104D	104CX5	104X5	104E
	0 - 2.5	500	500	1	107A	107B	107C	107D	107CX5	107X5	107E
	0 - 5	1000	1000	1	002A	002B	002C	002D	002CX5	002X5	002E
	0 - 10	2000	2000	1	011A	011B	011C	011D	011CX5	011X5	011E
	0 - 15	3000	3000	1	020A	020B	020C	020D	020CX5	020X5	020E
	0 - 20	4000	4000	1	110A	110B	110C	110D	110CX5	110X5	110E
	0 - 25	5000	5000	1	119A	119B	119C	119D	119CX5	119X5	119E
0-600	0 - 1	500	500	1	105A	105B	105C	105D	105CX5	105X5	105E
	0 - 2.5	1000	1000	1	108A	108B	108C	108D	108CX5	108X5	108E
	0 - 5	2000	2000	1	003A	003B	003C	003D	003CX5	003X5	003E
	0 - 10	4000	4000	1	012A	012B	012C	012D	012CX5	012X5	012E
	0 - 15	6000	6000	1	021A	021B	021C	021D	021CX5	021X5	021E
	0 - 20	8000	8000	1	111A	111B	111C	111D	111CX5	111X5	111E

*** "A", "C" and "CX5" models are self-powered. Input voltage range is limited to:**

103-135V for 150V models
215-280V for 300V models
395-550V for 600V models

All others require 103-135Vac instrument power, 50-400Hz.

Add suffix **"-22"** for optional 230Vac instrument power.

For custom Wh count rates, order desired model with added suffix "/xxxx", where "xxxx" = F.S. counts/hr.

Example: 0-300V, 0-100A input, 0-10Vdc output (for Watts) and TTL output (for Wh) with 5000 counts/hr at F.S.:

order model: **W-059D-T/5000**

Add suffix **"Y27"** for use on zero-crossing SCR controllers. NOTE: This option is not available for self-powered models.

NOTE: Watt outputs for **"A"**, **"B"**, **"C"**, **"CX5"**, **"D"** and **"X5"** models operate bi-directionally. Positive (+) output at terminal 2a indicates forward/consumed power; negative (-) output indicates reverse/generated power. **"E"** models and all Wh relay outputs are unidirectional and operate in the forward/consumed direction only. For **"E"** models, reverse power conditions may cause the Watt output to drop below 4mA but not below 0mA.

OHIO SEMITRONICS, INC. 4242 REYNOLDS DRIVE * HILLIARD, OHIO * 43026-1264
PHONE: (614) 777-1005 * FAX: (614) 777-4511
WWW.OHIOSEMITRONICS.COM * 1-800-537-6732

SINGLE-PHASE, TWO-WIRE (ONE-ELEMENT) MODELS SUPPLIED WITH EXTERNAL SENSOR

INPUTS		F.S.	F.S. CTS	WH PER	SENSOR	STANDARD OUTPUT MODEL W- OR W4-						
AC VOLTS	AC AMPS	WATTS	PER HR	COUNT	SIZE	0-±1mA*	0-±1mA	0-±10V*	0-±10V	0-±5V*	0-±5V	4-20mA
0-150	0 - 100	10k	10000	1	W	058A	058B	058C	058D	058CX5	058X5	058E
	0 - 200	20k	2000	10	W	067A	067B	067C	067D	067CX5	067X5	067E
	0 - 400	40k	4000	10	X	076A	076B	076C	076D	076CX5	076X5	076E
	0 - 600	60k	6000	10	X	085A	085B	085C	085D	085CX5	085X5	085E
	0 - 1000	100k	1000	100	Y	094A	094B	094C	094D	094CX5	094X5	094E
0-300	0 - 100	20k	2000	10	W	059A	059B	059C	059D	059CX5	059X5	059E
	0 - 200	40k	4000	10	W	068A	068B	068C	068D	068CX5	068X5	068E
	0 - 400	80k	8000	10	X	077A	077B	077C	077D	077CX5	077X5	077E
	0 - 600	120k	1200	100	X	086A	086B	086C	086D	086CX5	086X5	086E
	0 - 1000	200k	2000	100	Y	095A	095B	095C	095D	095CX5	095X5	095E
0-600	0 - 100	40k	4000	10	W	060A	060B	060C	060D	060CX5	060X5	060E
	0 - 200	80k	8000	10	W	069A	069B	069C	069D	069CX5	069X5	069E
	0 - 400	160k	1600	100	X	078A	078B	078C	078D	078CX5	078X5	078E
	0 - 600	240k	2400	100	X	087A	087B	087C	087D	087CX5	087X5	087E
	0 - 1000	400k	4000	100	Y	096A	096B	096C	096D	096CX5	096X5	096E

Note: Current Transformer is supplied as part of the model. Refer also to notes below table on page first page.

THREE-PHASE, THREE-WIRE (TWO-ELEMENT) MODELS WITH INTERNAL CURRENT SENSORS

INPUTS		F.S.	F.S. COUNTS	WH PER	STANDARD OUTPUT MODEL W- OR W4-						
AC VOLTS	AC AMPS	WATTS	PER HOUR	COUNT	0-±1mA*	0-±1mA	0-±10V*	0-±10V	0-±5V*	0-±5V	4-20mA
0-150	0 - 1	200	200	1	120A	120B	120C	120D	120CX5	120X5	120E
	0 - 2.5	500	500	1	129A	129B	129C	129D	129CX5	129X5	129E
	0 - 5	1k	1000	1	004A	004B	004C	004D	004CX5	004X5	004E
	0 - 10	2k	2000	1	013A	013B	013C	013D	013CX5	013X5	013E
	0 - 15	3k	3000	1	022A	022B	022C	022D	022CX5	022X5	022E
	0 - 20	4k	4000	1	112A	112B	112C	112D	112CX5	112X5	112E
	0 - 25	5k	5000	1	123A	123B	123C	123D	123CX5	123X5	123E
0-300	0 - 1	400	400	1	121A	121B	121C	121D	121CX5	121X5	121E
	0 - 2.5	1k	1000	1	130A	130B	130C	130D	130CX5	130X5	130E
	0 - 5	2k	2000	1	005A	005B	005C	005D	005CX5	005X5	005E
	0 - 10	4k	4000	1	014A	014B	014C	014D	014CX5	014X5	014E
	0 - 15	6k	6000	1	023A	023B	023C	023D	023CX5	023X5	023E
	0 - 20	8k	8000	1	113A	113B	113C	113D	113CX5	113X5	113E
	0 - 25	10k	10000	1	124A	124B	124C	124D	124CX5	124X5	124E
0-600	0 - 1	800	800	1	122A	122B	122C	122D	122CX5	122X5	122E
	0 - 2.5	2k	2000	1	131A	131B	131C	131D	131CX5	131X5	131E
	0 - 5	4k	4000	1	006A	006B	006C	006D	006CX5	006X5	006E
	0 - 10	8k	8000	1	015A	015B	015C	015D	015CX5	015X5	015E
	0 - 15	12k	12000	1	024A	024B	024C	024D	024CX5	024X5	024E
	0 - 20	16k	1600	10	114A	114B	114C	114D	114CX5	114X5	114E

Note: Refer to notes below table on page first page.

THREE-PHASE, THREE-WIRE (TWO-ELEMENT) MODELS SUPPLIED WITH EXTERNAL SENSORS

INPUTS		F.S.	F.S. CTS	WH PER	SENSOR	STANDARD OUTPUT MODEL W- OR W4-						
AC VOLTS	AC AMPS	WATTS	PER HOUR	COUNT	SIZE	0-±1mA*	0-±1mA	0-±10V*	0-±10V	0-±5V*	0-±5V	4-20mA
0-150	0 - 100	20k	2000	10	W	061A	061B	061C	061D	061CX5	061X5	061E
	0 - 200	40k	4000	10	W	070A	070B	070C	070D	070CX5	070X5	070E
	0 - 400	80k	8000	10	X	079A	079B	079C	079D	079CX5	079X5	079E
	0 - 600	120k	12000	10	X	088A	088B	088C	088D	088CX5	088X5	088E
	0 - 1000	200k	2000	100	Y	097A	097B	097C	097D	097CX5	097X5	097E
0-300	0 - 100	40k	4000	10	W	062A	062B	062C	062D	062CX5	062X5	062E
	0 - 200	80k	8000	10	W	071A	071B	071C	071D	071CX5	071X5	071E
	0 - 400	160k	1600	100	X	080A	080B	080C	080D	080CX5	080X5	080E
	0 - 600	240k	2400	100	X	089A	089B	089C	089D	089CX5	089X5	089E
	0 - 1000	400k	4000	100	Y	098A	098B	098C	098D	098CX5	098X5	098E
0-600	0 - 100	80k	8000	10	W	063A	063B	063C	063D	063CX5	063X5	063E
	0 - 200	160k	1600	100	W	072A	072B	072C	072D	072CX5	072X5	072E
	0 - 400	320k	3200	100	X	081A	081B	081C	081D	081CX5	081X5	081E
	0 - 600	480k	4800	100	X	090A	090B	090C	090D	090CX5	090X5	090E
	0 - 1000	800k	8000	100	Y	099A	099B	099C	099D	099CX5	099X5	099E

Note: Current Transformers are supplied as part of the model. Refer also to notes below table on first page.

OHIO SEMITRONICS, INC. 4242 REYNOLDS DRIVE * HILLIARD, OHIO * 43026-1264
PHONE: (614) 777-1005 * FAX: (614) 777-4511
WWW.OHIOSEMITRONICS.COM * 1-800-537-6732

AC WATT/WATTHOUR TRANSDUCER MODEL W-/W4-

THREE-PHASE, FOUR-WIRE (THREE-ELEMENT) MODELS WITH INTERNAL CURRENT SENSORS

INPUTS		F.S. WATTS	F.S. COUNTS PER HOUR	WH PER COUNT	STANDARD OUTPUT MODEL W- OR W4-						
AC VOLTS	AC AMPS				0-±1mA*	0-±1mA	0-±10V*	0-±10V	0-±5V*	0-±5V	4-20mA
0-150 L-N	0 - 1	300	300	1	125A	125B	125C	125D	125CX5	125X5	125E
	0 - 2.5	750	750	1	132A	132B	132C	132D	132CX5	132X5	132E
	0 - 5	1.5k	1500	1	007A	007B	007C	007D	007CX5	007X5	007E
	0 - 5	1.5k	1500	1	7.5A	7.5B	7.5C	7.5D	7.5CX5	7.5X5	7.5E
	0 - 10	3k	3000	1	016A	016B	016C	016D	016CX5	016X5	016E
	0 - 15	4.5k	4500	1	025A	025B	025C	025D	025CX5	025X5	025E
	0 - 20	6k	6000	1	115A	115B	115C	115D	115CX5	115X5	115E
	0 - 25	7.5k	7500	1	127A	127B	127C	127D	127CX5	127X5	127E
0-300 L-N	0 - 1	600	600	1	126A	126B	126C	126D	126CX5	126X5	126E
	0 - 2.5	1.5k	1500	1	133A	133B	133C	133D	133CX5	133X5	133E
	0 - 5	3k	3000	1	008A	008B	008C	008D	008CX5	008X5	008E
	0 - 5	3k	3000	1	8.5A	8.5B	8.5C	8.5D	8.5CX5	8.5X5	8.5E
	0 - 10	6k	6000	1	017A	017B	017C	017D	017CX5	017X5	017E
	0 - 15	9k	9000	1	026A	026B	026C	026D	026CX5	026X5	026E
	0 - 20	12k	12000	1	116A	116B	116C	116D	116CX5	116X5	116E
	0 - 25	15k	1500	10	128A	128B	128C	128D	128CX5	128X5	128E

Note: Part Numbers 7.5 and 8.5 denote 2½-element units. Refer also to notes below table on first page.

THREE-PHASE, FOUR-WIRE (THREE-ELEMENT) MODELS SUPPLIED WITH EXTERNAL SENSORS

INPUTS		F.S. WATTS	F.S. CTS PER HOUR	WH PER COUNT	SENSOR SIZE	STANDARD OUTPUT MODEL W- OR W4-						
AC VOLTS	AC AMPS					0-±1mA*	0-±1mA	0-±10V*	0-±10V	0-±5V*	0-±5V	4-20mA
0-150 L-N	0 - 100	30k	3000	10	W	064A	064B	064C	064D	064CX5	064X5	064E
	0 - 200	60k	6000	10	W	073A	073B	073C	073D	073CX5	073X5	073E
	0 - 400	120k	1200	100	X	082A	082B	082C	082D	082CX5	082X5	082E
	0 - 600	180k	1800	100	X	091A	091B	091C	091D	091CX5	091X5	091E
	0 - 1000	300k	3000	100	Y	100A	100B	100C	100D	100CX5	100X5	100E
0-300 L-N	0 - 100	60k	6000	10	W	065A	065B	065C	065D	065CX5	065X5	065E
	0 - 200	120k	12000	10	W	074A	074B	074C	074D	074CX5	074X5	074E
	0 - 400	240k	2400	100	X	083A	083B	083C	083D	083CX5	083X5	083E
	0 - 600	360k	3600	100	X	092A	092B	092C	092D	092CX5	092X5	092E
	0 - 1000	600k	6000	100	Y	101A	101B	101C	101D	101CX5	101X5	101E

Note: Current Transformers are supplied as part of the model. Refer also to notes under table on first page.

SPECIFICATIONS

INPUT

Voltage ..... (See Tables)
Current ..... (See Tables)
Frequency Range ..... W- models 48-70Hz
W4- models 400Hz
Power Factor ..... Any
Response (Transient, to 90% F.S.)
With Internal Sensors ..... <100µs
With Current Transformers 1ms
Burden
Voltage and Current 1.25VA/phase
Output Amplifier 2W
Current Overload (Continuous) ... 1-10A models ..... 2 X F.S.
15A, 20A, 25A models ..... F.S.
Transient (all models) ..... 6 X F.S. (10 seconds)

DIELECTRIC TEST

Input/Output/Case ..... 1500Vac (RMS)
Surge ..... Withstands IEEE SWC test

INSTRUMENT POWER

"A", "C", "CX5" models ..... not required
"B", "D", "X5" & "E" models 103-135Vac, 50-400Hz, 5VA
"-22" Option ..... 230Vac ±10%, 50/60Hz, ±10%

OUTPUT

Wh Relay (Wh output is forward/consumed direction only)
Standard .... N/O SPST relay contact; 150Vac, 0.5A Rated
Contact Closure Period 200ms
"-T" Option ..... TTL output for Watthours, 5Vdc pulse
Watt Output, Loading
"A" & "B" models ..... (0-±1mAdc) 0-10kΩ
"C" & "D" models ..... (0-±10Vdc) ..... 2kΩ min.
"CX5" & "X5" models ..... (0-±5Vdc) ..... 2kΩ min.
"E" models ..... (4-20mAdc) 0-500Ω
(±1mA, ±5V and ±10V unit Watt outpus are bidirectional)
Response Time (to 90% F.S.) ... standard 250ms
Suffix **"Y27"** (for use on zero-crossing SCR controllers) 5s
NOTE: This option is not available for self-powered models.
Field Adjustable Calibration ..... ±10%

ACCURACY ..... ±0.5% F.S.

Includes combined effects of power factor, repeatability, linearity, and current sensor.
Analog Output Ripple ..... <1% F.S.

TEMPERATURE

Operating Range ..... -10ºC to +60ºC
Effect ..... ±1.0% of Rdg., ±0.1% F.S. Output

OHIO SEMITRONICS, INC.
4242 REYNOLDS DRIVE * HILLIARD, OHIO * 43026-1264
PHONE: (614) 777-1005 * FAX: (614) 777-4511
WWW.OHIOSEMITRONICS.COM * 1-800-537-6732

CONNECTION DIAGRAMS — MODEL W-/W4-

SINGLE-PHASE CONNECTIONS

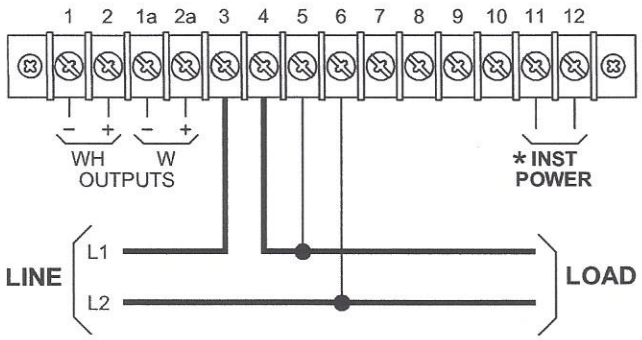

USING INTERNAL SENSOR

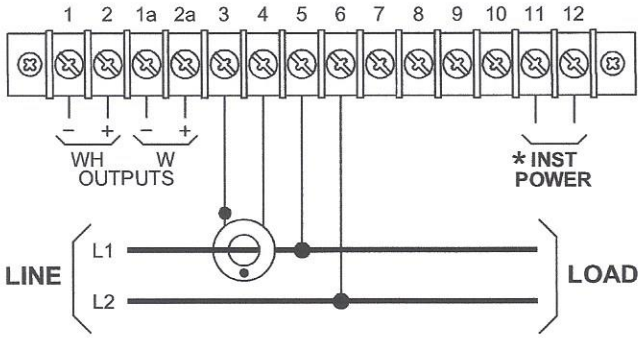

USING EXTERNAL SENSORS

SINGLE-PHASE, THREE-WIRE CONNECTIONS

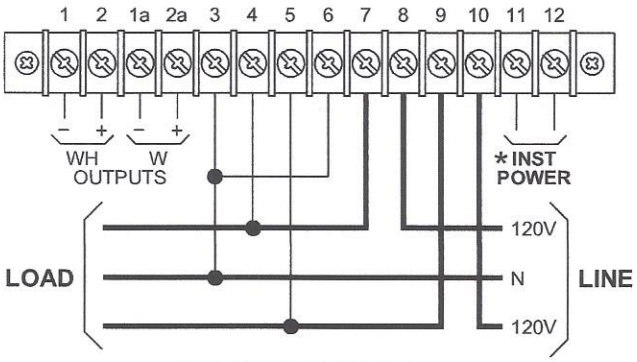

EDISON SYSTEM
USING INTERNAL SENSOR

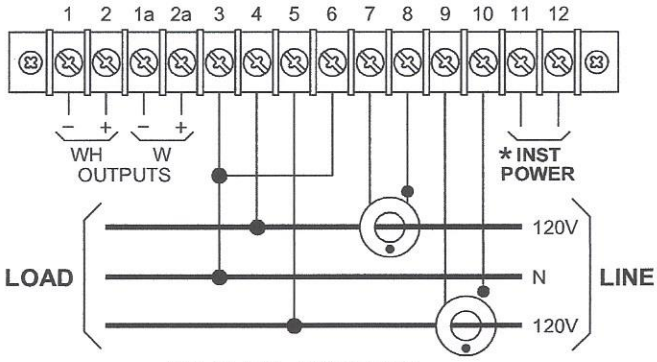

EDISON SYSTEM
USING EXTERNAL SENSORS

THREE-PHASE, THREE-WIRE CONNECTIONS

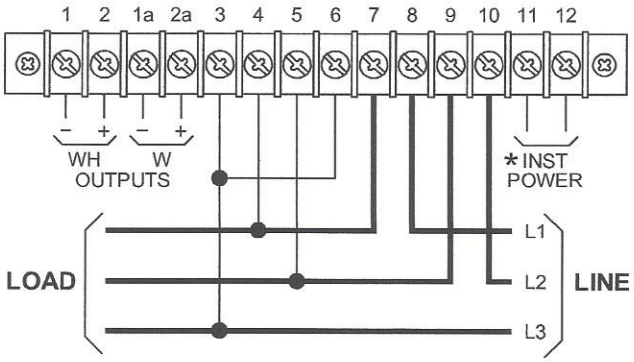

USING INTERNAL SENSOR

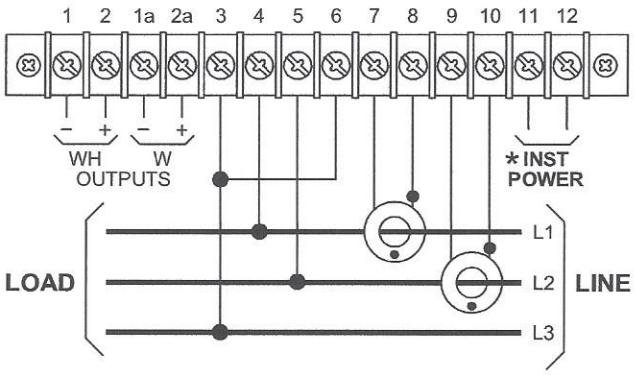

USING EXTERNAL SENSORS

* 115Vac on models with B, D, E or X5 suffix.
* 230Vac on models with -22 suffix.
* Not required on models with A, C or CX5 suffix.

Dwg# 0902-00872-B

OHIO SEMITRONICS, INC.
4242 REYNOLDS DRIVE * HILLIARD, OHIO * 43026-1264
PHONE: (614) 777-1005 * FAX: (614) 777-4511
WWW.OHIOSEMITRONICS.COM * 1-800-537-6732

CONNECTIONS & DIMENSIONS — MODEL W-/W4-

THREE-PHASE, FOUR-WIRE CONNECTIONS

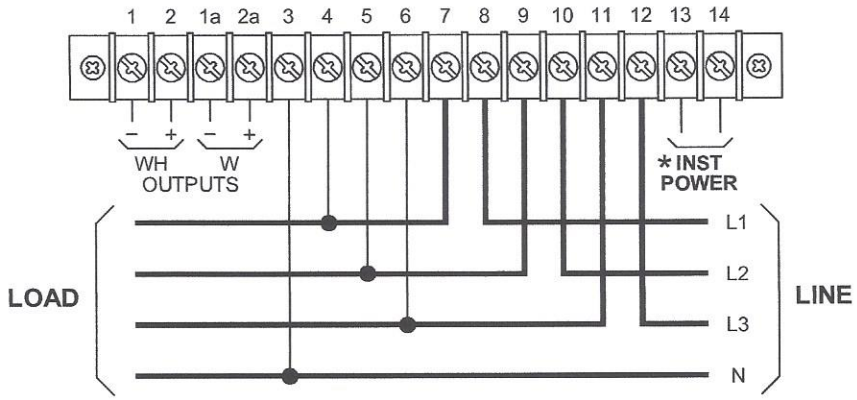

USING INTERNAL SENSORS

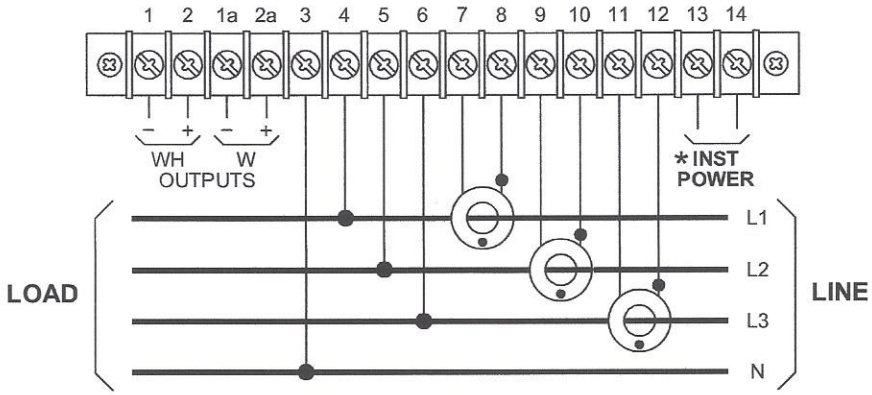

USING EXTERNAL SENSORS

* 115Vac on models with B, D, E or X5 suffix.
* 230Vac on models with -22 suffix.
* Not required on models with A, C or CX5 suffix.

Dwg# 0902-00872-B

CASE DIMENSIONS

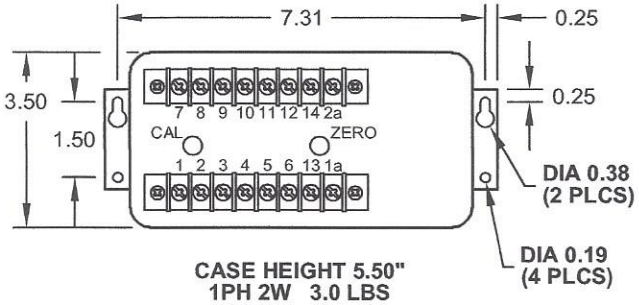

CASE HEIGHT 5.50"
1PH 2W 3.0 LBS
3PH 3W 3.7 LBS
3PH 4W 4.5 LBS

ALL DIMENSIONS IN INCHES.

SENSOR DIMENSIONS

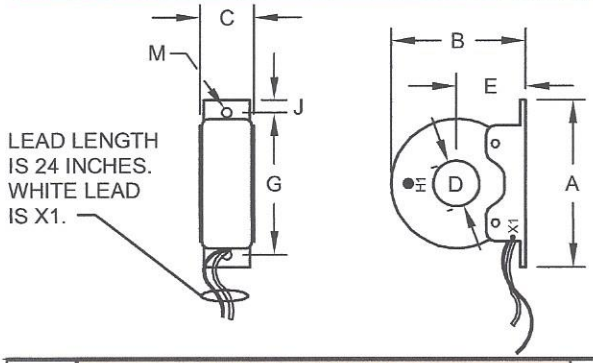

SENS. SIZE	SENSOR DIMENSIONS (inches)								WT. (lbs.)
	A	B	C	D	E	G	J	M	
W	4.50	3.70	1.25	1.25	1.94	3.88	0.34	0.27 X 0.44	1.43
X	6.50	4.70	1.25	2.50	2.46	5.75	0.39	0.28	1.61
Y	6.50	4.70	1.25	3.00	2.46	5.75	0.39	0.28	1.10

Lead Length: 24 inches White Lead is X1

OHIO SEMITRONICS, INC.
4242 REYNOLDS DRIVE * HILLIARD, OHIO * 43026-1264
PHONE: (614) 777-1005 * FAX: (614) 777-4511
WWW.OHIOSEMITRONICS.COM * 1-800-537-6732

Measuring box T+RH, dry/wet bulb

Manual

Operation

Measurement principle

Measuring box T+RH

The Measuring box T+RH (dry/wet bulb) operates on the physical principle of an aspirated psychrometer. The Measuring box T+RH measures the wet and dry bulb temperatures. The process computer calculates the absolute and relative air humidities, as well as the humidity deficit based on the difference between these two temperatures.

The dry bulb temperature is the ambient temperature as measured by a dry bulb temperature sensor. The wet bulb temperature is measured by a wet bulb temperature sensor inside a damp wick. This wick absorbs the water from the fluid reservoir. Below the dew point, water in the wick evaporates and in so doing extracts heat from the air.

The extent to which water is able to evaporate out of the wick is dependent on how much moisture the surrounding air is still able to absorb, i.e. the more humid the air flow, the less moisture the air can absorb and the less water can evaporate out of the wick. The wick in turn absorbs less heat. The smaller the difference between the dry and wet bulb temperatures, the higher the relative air humidity (%RH) and the lower the humidity deficit (g/kg).

The optimal speed with which air flows past the dry and wet bulb sensors is determined by the speed-controlled fan and the restrictor plate. The air speed is independent of the frequency of the fan's power supply.

The Measuring box T+RH temperature sensors are shielded from direct sunlight.

Do not install the Measuring box T+RH in areas with a hanging mist, as fine mist droplets can condense inside the fan housing when compressed. This can cause damage to the electronic componentry.

Specifications

Article	Measuring box T+RH
Article number	3779024
Housing	Single-walled, thermally galvanized sheet metal with white coating
Dimensions (L x W x H)	260 x 175 x 205 mm
Measurement principle	Aspirated psychrometer
Fluid reservoir capacity	1800 ml
Connecting cable	7-core, Ø 0.8 mm (0.5 mm^2), length 5 m
Ambient temperature	0–40 °C
Working range	5–40 °C 0–100% RH (non-condensing)
Range	5–70 °C 0–100% RH (non-condensing)
Thermistor resistance	3 kΩ at 25 °C (non-linear)
Temperature precision (software-determined value)	0.3 °C (15–35 °C) 0.4 °C (< 15 °C and > 35 °C)
RH precision (software-determined value)	3% (10–100% RH), (15–35 °C) 4% (10–100% RH), (< 15 °C and > 35 °C)
Fan power supply	24 VAC at 50/60 Hz (converted to 24 VDC by bridge rectifier)
Fan load current	0.1 A

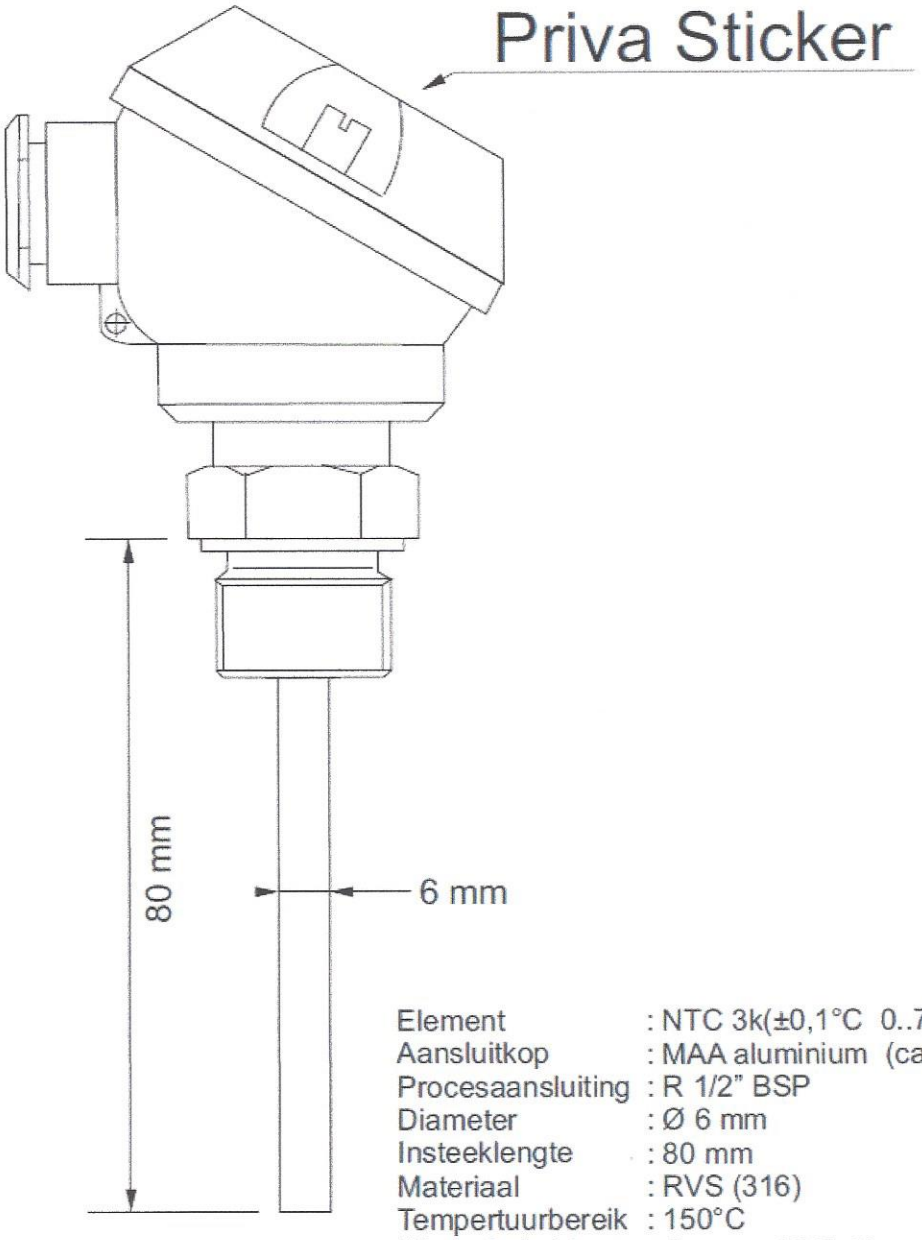

Element	: NTC 3k(±0,1°C 0..70°C) IN-A003K-D336/LW-BK-64mm
Aansluitkop	: MAA aluminium (cable gland M16 x 1,5)
Procesaansluiting	: R 1/2" BSP
Diameter	: Ø 6 mm
Insteeklengte	: 80 mm
Materiaal	: RVS (316)
Tempertuurbereik	: 150°C
Bijzonderheid	: Gravure NTC-3k en batchnummer in de zeskant v/d procesaansluiting Sticker met logo Priva op de deksel v/d aansluitkop. Label met batchnummer op klemsokkel. Sensoren verpakt in kartonnen doosje met barcode en batchnummer en logo Priva

Priva BV **De Lier**			Scale : _	Date :
All dimensions are in mm.			Description :	

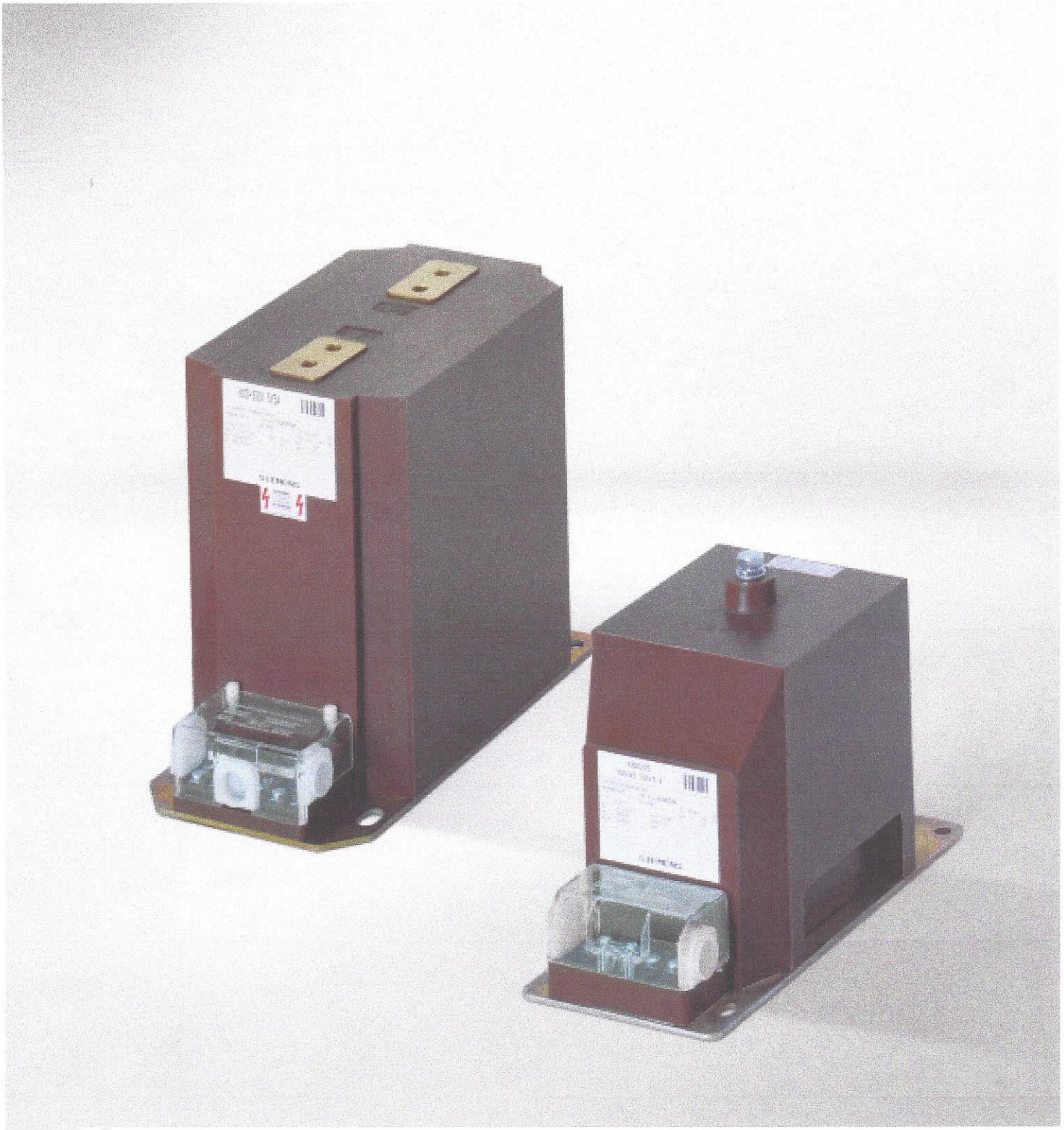

4M Protective and Measuring Transformers

Medium-Voltage Equipment
Selection and Ordering Data

Catalog HG 24 · 2009

Answers for energy.

SIEMENS

4M Protective and Measuring Transformers

Medium-Voltage Equipment
Catalog HG 24 · 2009

Invalid: Catalog HG 24 · 1994

Contents | Page

Description 5
- General 6
- Construction and mode of operation 7
- Current transformers 8
- Voltage transformers 12
- Ambient conditions and dielectric strength 14
- Partial discharge measurement and standards 15

1

Equipment Selection 17
- Ordering data and configuration example 18
- Product overview of current transformers 19
- Selection of current transformers 20
- Product overview of voltage transformers 62
- Selection of voltage transformers 63

2

Technical Data 69
- Current transformers 70
- Voltage transformers 78

3

Annex 83
- Inquiry form 84
- Configuration instructions 85
- Configuration aid Foldout page

4

1

Limits of current error and phase displacement according to IEC 60044-1

Accuracy class	± current error in percent at rated current I_n				± phase displacement in minutes at rated current I_n			
	120 %	100 %	20 %	5 %	120 %	100 %	20 %	5 %
Measuring current transformers								
0.2	0.2	0.2	0.35	0.75	10	10	15	30
0.5	0.5	0.5	0.75	1.5	30	30	45	80
1	1	1	1.5	3	60	60	90	100
Protective current transformers								
5P	–	1	–	–	–	60	–	–
10P	–	3	–	–	–	–	–	–

Measuring current transformers

Current transformers provided for the connection of measuring instruments, meters and similar devices (e.g. 10 VA Cl. 0.5 FS5).

Rated instrument limit primary current

The value of the primary current at rated burden and a composite error of 10 %.

Instrument security factor n

The ratio of rated instrument limit primary current to the rated primary current

Note:

In the event of short-circuit currents flowing through the primary winding of a current transformer, the thermal stress to the measuring instruments supplied by the current transformer is smallest when the value of the rated instrument security factor is small.

Accuracy class

The limit of the percentage current error at rated current I_N (see table).

Generally, current transformers are used for a measuring range of 5 % to 120 % of the rated primary current.

Special designs

Extended current ratings

Current transformers with ext. 200 % can be continuously operated at 2 x I_N, and keep the error limits of their class in the range up to 200 % of the rated primary current.

Protective current transformers

Current transformers intended to supply protection relays (e.g. 15 VA Cl. 10 P 10).

Accuracy class (identification P)

The limit of the percentage current error for the rated accuracy limit primary current.

Rated accuracy limit primary current

The value of primary current up to which the transformer will comply with the requirements for composite error.

Accuracy limit factor

The ratio of the rated accuracy limit primary current to the rated primary current.

Multi-ratio current transformers

If the ratio of current transformers has to be variable, e.g. for planned switchgear extensions, it is possible to use multi-ratio current transformers.

Primary multi-ratio

Only possible for wound-primary transformers (transformers with several primary turns) with a ratio of 1:2 (e.g. 2 x 600 A/1 A). Reconnection is made by re-arrangement of copper lugs in the primary connection area. Ratings, instrument security factors as well as the secondary internal resistance remain constant during reconnection.

Secondary multi-ratio

In single-turn and wound-primary transformers, this can be implemented by taps of the secondary windings (e.g. 2000–1000 A/1 A).

Ratings or instrument security factors change almost linearly with the ratio. If not stated otherwise, the specified rated data is always referred to the lower current value.

APPENDIX E

Appendix E: Economic Analysis

Prime Mover Efficiencuy:	37.5%	
Actual Efficiency (HHV):	87.8%	
Gross Heating Value of Natural Gas:	22,800	Btu/lb
Spec. Fuel:	11,485	kW
Spec Fuel:	39.2	MMBtu/hr
Spec Efficiency (HHV):	87.8%	
Heat Rate:	9,095	Btu/kWh

Cond HX Q:	4.23	MMBtu/hr
Condensing Heat Exchanger is:	on	
Actual:	19.7	MMBtu/hr
T:	203.1	F
T:	95.0	C
Spec:	19.7	MMBtu/hr
mdot:	88.7	m3/hr
mdot:	23,439	gal/hr
T:	44.9	C
T:	112.8	F

0.877807

0.375256

Total onsite capacity: 12,930 kW

Spec. Output 4,347 kW

Net Output 4,310 kW

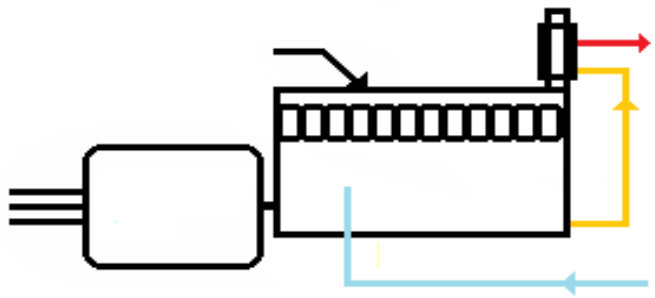

Mass Flow of Fuel:	1719.30	lbs/hour
Molecular Weight of Methane:	16.04	lbs/lb-mole
Mass Flow:	107.19	moles/hour
Molecular Weight of CO2:	44.01	lbs/lb-mole
Mass Flow of CO2:	4717.35	lbs/hour
lbs of C02/kWh	1.09	lbs/kWh Output
lbs of C02/kWh	0.410722	lbs/kWh Input
Mass Flow:	2.14	tonnes/hr

$91.74

Avoided Boiler CO2:

Avoided Fuel:	21.89	MMBtu/hr
Mass Flow of Fuel:	960.04	lbs/hour
Mass Flow of Fuel:	59.85	moles/hour
Mass Flow of CO2:	2634.12	lbs/hour
Mass Flow:	1.20	tonnes/hr

Net Capacity:	4310	kW
Fuel:	39.2	MMBtu/hr
Thermal:	19.7	MMBtu/hr

Cost of Operations

Fuel Cost per Hour:	$171.33
Maintenance Cost per Hour:	$54.69
Total Hourly Cost:	$226.02
Period Departing Load and Standby Charges:	$433,922
Period Hours of Operation:	13,396
Total Period Cost of Operation:	$3,461,823

Total Period Gross Revenue:	$6,304,183
Total Period Net Revenue:	$2,842,360
Total Annual Net Revenue:	$1,421,180
Simple Payback:	3.67 Years

Fuel Cost per Hour:	$171.33
Marginal Cost of Generation:	$.026/kWh
Maintenance Cost per Hour:	$54.69
Period Departing Load and Standby Charges:	$433,922
Period Hours of Operation:	13,396
Total Period Cost of Operation:	$3,461,823
Annual Electric Utility GHG Reimbursement:	$39,566
Total Period Gross Revenue:	$6,304,183
Total Period Net Revenue:	$2,842,360

5,801,160

Project Capital Cost:	$5,221,044
Total Annual Net Revenue:	$1,421,180
Simple Payback (Years):	3.67

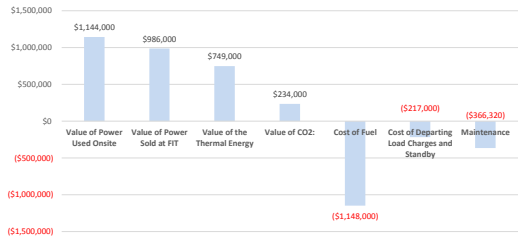

Revenue from Operations

Hourly Avoided Boiler Fuel:	21.89	MMBtu/hr
Incremental Hourly CO2 (tonnes/hr):	0.95	
Period Hours of CO2:	5377	
Value of CO2 per lb	$0.0417	
Value of CO2 per Tonne	$91.91	
Period Fuel Savings:	$1,497,243	
Period Value of CO2:	$467,084	

	$18,080.08	$1,211.38	
Marginal Cost of Generation:		$0.026	per kWh
Installed Cost per kW:		$1,211.38	per kW (net)
Maintenance Cost:		$0.0127	per kW (net)
Weekly Avoided Fuel:	3677.3333	MMBtu	

Value of Power Used Onsite	$1,144,000	#########
Value of Power Sold at FIT	$986,000	#########
Value of the Thermal Energy	$749,000	#########
Value of CO2:	$234,000	#########
Cost of Fuel	($1,148,000)	-1147630.1
Cost of Departing Load Charges and Standi	($217,000)	-$216,961
Maintenance	($366,320)	
Net Cost of GHG Allowances	($2,000)	-2198.6267

2.464

	FIT On Peak	Grow Lights Off FIT Mid Peak	FIT Off Peak	Grow Lights On FIT Off Peak	FIT Super Off Peak	FIT Totals	Avoided Tariff (TOU-PA) Off Peak
Bin 1 (June thru Sept)	$294,830	$219,590	$6,297	$36,844		$557,562	$290,428
Bin 2 (Oct, Nov, April, May)	$0	$469,201	$112,370	$28,998	$40,017	$650,586	$600,844
Bin 3 (Nov thru March)	0	$569,847	$117,945	$36,247	$40,017	$764,057	$660,929
Avoided Facilities Charge:							$736,319
					Total:	$1,972,205	$2,288,520

$0.061

Cost of CO2:		3.102556411
$12	per tonne	
0.012	per kG	
0.63624	per MMBtu	
0.00445368	per kWh (at heat rate of 7000 Btu/kWh)	

Total Period Sales:

Average Value of Power:	$0.074	per/kWh
Value of Avoided Facilities Charges:	$0.013	per/kWh

Initial Investment	$4,921,044
After Tax IRR	22.64%
Years to Capital Recovery	4.0

Border Price	Simple Payback
$3.85	1,972,205
$3.50	1,882,856
$3.85	1,972,205
$4.00	2,010,497
$4.50	2,138,139
$5.00	2,265,780
$5.50	2,393,422
$6.00	2,521,063
$6.50	2,648,705
$7.00	2,776,346

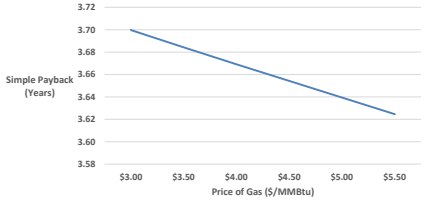

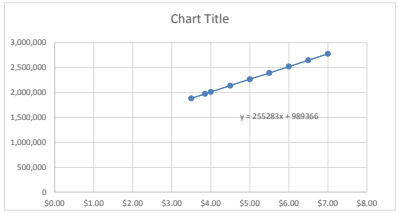

$3.00	3.70
$3.50	3.68
$4.00	3.67
$4.50	3.65
$5.00	3.64
$5.50	3.62

$3.85	$3.67	$986	$749	
	Fuel Cost	FIT Revenu	Thermal Energy Savings	
$3.00	$924	$878	$624	$1,502
$3.50	$1,056	$941	$697	$1,638
$4.00	$1,187	$1,005	$771	$1,776
$4.50	$1,318	$1,069	$844	$1,913
$5.00	$1,450	$1,133	$917	$2,050
$5.50	$1,581	$1,197	$991	$2,188

	Fuel Cost	Sum of FIT Revenue and Thermal Enertgy Savings
$3.00	($924)	$1,502
$3.50	($1,056)	$1,638
$4.00	($1,187)	$1,776
$4.50	($1,318)	$1,913
$5.00	($1,450)	$2,050
$5.50	($1,581)	$2,188

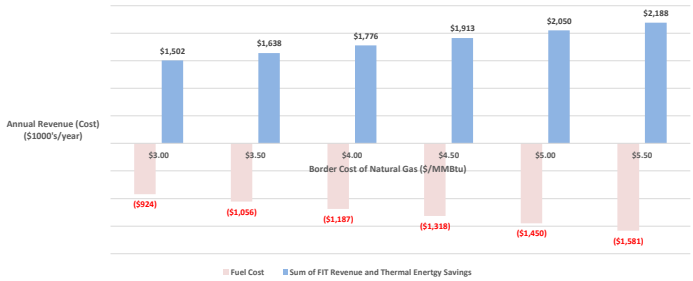

35.8

Prime Mover Efficiencuy: 32.7%
Actual Efficiency (HHV): 73.9%

Cond HX Q: 4.23 MMBtu/hr

Gross Heating Value of Natural Gas: 22,800 Btu/lb
Spec. Fuel: 3,448 kW
Spec Fuel: 11.8 MMBtu/hr
Spec Efficiency (HHV): 73.9%
Heat Rate: 10,439 Btu/kWh

Actual: 4.8 MMBtu/hr
T: 203.1 F
T: 95.0 C
Spec: 4.8 MMBtu/hr

mdot: 88.7 m3/hr
mdot: 23,439 gal/hr

Total onsite capacity: 3,382 kW

Spec. Output 1,137 kW
Net Output 1,127 kW

Parasitic Used: 130 kW

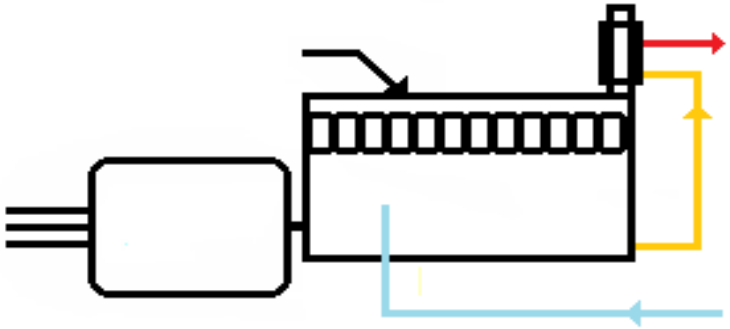

T: 44.9 C
T: 112.8 F

Mass Flow of Fuel: 516.16 lbs/hour
Molecular Weight of Methane: 16.04 lbs/lb-mole
Mass Flow: 32.18 moles/hour
Molecular Weight of CO2: 44.01 lbs/lb-mole
Mass Flow of CO2: 1416.23 lbs/hour
lbs of C02/kWh 1.26 lbs/kWh Output
lbs of C02/kWh 0.410722 lbs/kWh Input
Mass Flow: 0.64 tonnes/hr

Avoided Boiler CO2:

Avoided Fuel: 5.38 MMBtu/hr
Mass Flow of Fuel: 236.05 lbs/hour
Mass Flow of Fuel: 14.72 moles/hour
Mass Flow of CO2: 647.68 lbs/hour
Mass Flow: 0.29 tonnes/hr

Cost of Operations

Fuel Cost per Hour:	$51.91
Maintenance Cost per Hour:	$21.83
Total Hourly Cost:	$73.74
Period Departing Load and Standby Charges:	$113,496
Period Hours of Operation:	13,396
Total Period Cost of Operation:	$1,101,286
Total Period Gross Revenue:	$1,617,896
Total Period Net Revenue:	$516,609
Total Annual Net Revenue:	$258,305
Simple Payback:	9.82 Years

Fuel Cost per Hour:	$51.91
Marginal Cost of Generation:	$.041/kWh
Maintenance Cost per Hour:	$21.83
Period Departing Load and Standby Charges:	$113,496
Period Hours of Operation:	13,396
Total Period Cost of Operation:	$1,101,286
Annual Electric Utility GHG Reimbursement:	$12,309
Total Period Gross Revenue:	$1,617,896
Total Period Net Revenue:	$516,609

Project Capital Cost:	$2,536,475
Total Annual Net Revenue:	$258,305
Simple Payback (Years):	9.82

Revenue from Operations

Hourly Avoided Boiler Fuel:	5.38	MMBtu/hr
Incremental Hourly CO2 (tonnes/hr):	0.25	
Period Hours of CO2:	5377	
Value of CO2 per lb	$0.0417	
Value of CO2 per Tonne	$91.91	
Period Fuel Savings:	$356,673	
Period Value of CO2:	$122,170	

Installed Cost per kW:	$2,250	per kW (net)
Maintenance Cost:	$0.0194	per kW (net)
Marginal Cost of Generation:	$0.041	per kWh
		$0.0051
Weekly Avoided Fuel:	904.179487	MMBtu

Value of Power Used Onsite	$299,000	$299,292.32
Value of Power Sold at FIT	$258,000	$257,924.65
Value of the Thermal Energy	$178,000	$178,336.29
Value of CO2:	$61,000	$61,085.15
Cost of Fuel	($348,000)	-347672.9501
Cost of Departing Load Charges and Stand	($57,000)	-$56,748
Net Cost of GHG Allowances	($13,000)	-12639.71935

	Grow Lights Off			Grow Lights On		FIT Totals	Avoided Tariff (TOU-PA)
	FIT On Peak	FIT Mid Peak	FIT Off Peak	FIT Off Peak	FIT Super Off Peak		Off Peak
Bin 1 (June thru Sept)	$294,830	$219,590	$6,297	$36,844		$145,835.73	$75,964
Bin 2 (Oct, Nov, April, May)	$0	$469,201	$112,370	$28,998	$40,017	$170,167.02	$157,157
Bin 3 (Nov thru March)	0	$569,847	$117,945	$36,247	$40,017	$199,847	$172,872
Avoided Facilities Charge:							$192,591
					Total:	$515,849	$598,585

Cost of CO2:			3.102556
	$15	per tonne	
	0.015	per kG	
	0.7953	per MMBtu	
	0.0055671	per kWh (at heat rate of 7000 Btu/kWh)	

Border Price	Simple Payback
4.5	9.82

Rate Assumptions

TOU-PA-3

	DEMAND				ENERGY			
	Facilities	On-Peak	Mid-peak	Off-peak	On-Peak	Mid-peak	Off-peak	
Summer	$8.09	$11.68	$2.67	0	0.13137	0.08164	0.06078	$0.0289
Winter	$8.09	0	0	0		0.08602	0.06657	

Customer Charge: $197.69

Customer Charge: $609.78

	Summer	Winter
Off Peak Energy ($/kWh):	$0.06078	$0.06657
Facilities Charge ($/kW/mo):	$8.09	$8.09

TOU-8-S Primary

	DEMAND			
	Facilities	On-Peak	Mid-peak	Off-peak
Summer Supplemental	$14.09	$22.39	$6.45	0
Winter Supplemental	$14.09	0	0	0
Summer Backup (CRC)	7.59	$9.99	$2.82	0
Winter Backup (CRC)	7.59	0	0	0
Customer Charge:	$319.56			

Electric Utility GHG Reimbursement

Electricity Export from CHP System (MWh):	17,003	4,447	
Electricity Export from CHP System (MMBtu):	53,410	13,970	
Onsite Use of Electricity (MWh):	11,866	3,104	
Onsite Use of Electricity (MMBtu):	40,488	10,590	
Useful Thermal Output (MMBtu):	131,955	32,445	
Total Useful Energy (MMBtu):	225,852	57,005	
Fuel Energy Input (MMBtu):	262,570	78,828	
Total Free Allowances:	0	0	
Emission Quantity (MT):	3,297	1,026	
GHG Allowanc e Price:	$12	$12	
Total Reimbursement:	$39,566	$12,309	per year

Nonbypassable Surcharges

NDC	$0.000280	
PPP	$0.009660	
CTC	$0.000000	~~1st MW exempt~~
DWRBC	$0.005260	~~1st MW exempt~~
PCIA-URG	n/a	
Weighted Total	$0.015200	
	$0.009940	

Gas Rate	**GT-F**				GT-F3D	
					therm	$/th
	C&I	EG		Tier 1	20833	0.15126
Transportation	$0.319	$0.362	($/MMBTU)	Tier 2	62500	0.09352
2014 SoCal Border:	$3.85	$3.85	($/MMBTU)	Tier 3	83333	0.05659
PPP	$0.778		($/MMBTU)	Tier 4	5084732	0.0302
total	$4.947	$4.212	($/MMBTU)	total	5251398	
				Average		0.03185265

Voucher	(Multiple Items)			Equip/Mat	Eng/soft	Const Labor	Equip/Mat	Eng/soft	Construction
Row Labels	**Sum of Amount**								
Airgas USA, LLC	1,487	1487	N2, CO O2 for COdiNOx	100%			1,487	0	0
All Cable	2,006	2006	wiring & cable	100%			2,006	0	0
All Phase Electric Supply Co.	2,188	2189		100%			2,189	0	0
Alpine Geotechnical	680	680	soil report		100%		0	680	0
AMPS-DMS, Inc.	3,125	3125	ISO meter install			100%	0	0	3,125
Avance Concrete Sawing	738	738	Foundation			100%	0	0	738
B&R Tool & Supply Co	357	357	Materials	100%			357	0	0
BFL Canada Insurance Services Inc.	19,842	19842	Equip Ins	100%			19,842	0	0
C. Hood & Associates, Inc.	24,309	24309	Eng		100%		0	24,309	0
Canadian Climatrol Systems Ltd.	650	650	GH Computer interface		100%		0	650	0
COAPIP	(224)						0	0	0
Coastal Pipco	1,774	1774	Material plumbing				0	0	0
CONTEC	12,400	12400			100%	0%	0	12,400	0
Control Technology Inc.	178,876	178876	Control System	31%	69%		55,452	123,424	0
DE Solutions, Inc.	(380,547)						0	0	0
DIEELE	442,306	442306	MV & Eng Control & Switchgear	30%		70%	132,692	0	309,614
Dieners Electric	345,973	345973		100%			345,973	0	0
Doby Hagar Trucking Inc.	1,430	1430				100%	0	0	1,430
Electrical Reliability Services Inc.	4,290	4290	Emerson		100%		0	4,290	0
Elite Fire Protection	38,538	38538			50%	50%	0	19,269	19,269
Enerdes BV - Energy Design	(1,240)						0	0	0
Energy Design BV	99,334	99334	CO2 fans	80%	20%		79,467	19,867	0
F2013 P2 Reclass 2nd installment for CoGen unit 3 to CIP GJ0052253	100,138	100138		100%			100,138	0	0
Famcon Utility Supply,Inc.	6,262	6262	conduit	100%			6,262	0	0
FCP INC.	74,384	74384				100%	0	0	74,384
FCPINC	269,335	269335		60%		40%	161,601	0	107,734
Fence Factory	4,395	4395	Switchgear fencing	50%		50%	2,198	0	2,198
FG Wilcox Inc.	560	560	parts	100%			560	0	0
Grainger Industrial Supply	1,318	1318		100%			1,318	0	0
Home Depot	1,316	1316		100%			1,316	0	0
HORAIR	4,950	4950	source test			100%	0	0	4,950
Horizon Air Measurement Services, Inc.	-						0	0	0
Horticultural Labor Service	58,755	58755	hot water piping			100%	0	0	58,755
Industrial Solution Services, Inc.	21,998	21998	urea	100%			21,998	0	0
INTERT	23,955	23955	Equip cert		100%	0%	0	23,955	0
Jensen Design & Survey	2,494	2494	bldg permit		100%		0	2,494	0
Keenan Supply	2,131	2131		100%			2,131	0	0
Loomis Tank Center	8,921	8921	urea tank	100%			8,921	0	0
LORCON	41,184	41184	Foundations	35%		65%	14,414	0	26,770
Lorenzana Construction	54,225	54225		35%		65%	18,979	0	35,246
MacValley Oil Company	39,255	39255	engine oil	100%			39,255	0	0
MASTERCARD	1,729	1729		100%			1,729	0	0
McMaster-Carr Supply Company	756	756		100%			756	0	0
MCMSUP	64	64				100%	0	0	64
Mobile Mini LLC	3,251	3251	scaffolding	100%			3,251	0	0
Mosier Bros	16,477	16477	oil tank	50%		50%	8,239	0	8,239
Power Machinery Centre	2,771	2771	forklift rental			100%	0	0	2,771
Powerstride Battery Co. Inc.	705	705		100%			705	0	0
SDV Logistiques/Logistics (Canada) Inc.	1,097	1097	transportation	100%			1,097	0	0
Senator International	-						0	0	0
Solid Structures	568	568		100%			568	0	0
Specialty Crane & Rigging Corp.	28,100	28100	rental			100%	0	0	28,100
SPECRA	(4,350)						0	0	0
State Ready Mix Inc.	4,406	4406	concrete	100%			4,406	0	0
Sunbelt Rentals	4,409	4409	rental			100%	0	0	4,409
Sunshine Metal Clad	35,247	35247	insulation	50%		50%	17,624	0	17,624
Taylor Steel & Welding Inc.	(3,420)						0	0	0
Travis Agricultural Construction	6,852	6852	gas pipe	50%		50%	3,426	0	3,426
Travis Agricultural Construction, Inc.	34,805	34805		50%		50%	17,403	0	17,403
Uline Inc.	1,297	1297		100%			1,297	0	0
U-Rent Inc	3,227	3227	rental			100%	0	0	3,227
Ventura County APCD	450	450	permit		100%		0	450	0
Ventura Pipe & Supply	4,895	4895		100%			4,895	0	0
Ventura Steel	16,689	16689		100%			16,689	0	0
Watertec Inc.	4,686	4686	plumber			100%	0	0	4,686
WATINC	107	107				100%	0	0	107
Wesco Distribution	5,989	5989		100%			5,989	0	0
Western Energy Systems	2,896,734	2896734		84%	8%	8%	2,433,257	231,739	231,739
White Cap Construction Supply	1,167	1167		100%			1,167	0	0
Winston & Strawn LLP	49,795	49795	legal		100%		0	49,795	0
WINSTR	16,619	16619	legal		100%		0	16,619	0
WIP Communications, Inc	22,303	22303	fiberoptic labor	40%		60%	8,921	0	13,382
WIPCOM	10,190	10190		40%		60%	4,076	0	6,114
Grand Total	**4,681,483**								
Houweling		155,000						155,000	
York eng		10,000			100%		0	10,000	0
SCE interconnection		566,667		40%	20%	40%	226,667	113,333	226,667
TOTAL		5,802,932					3,780,715	808,274	1,212,168
									5,801,158

Capital Cost		
Equipment and Materials		
GE JMS 624 Standardized Greenhouse CHP Platform	2,433,260	
Building Materials	161,600	
550 KVA Transformer and Splice/Communication Vaults	345,970	
Switch gear and 480 volt transformers	132,690	
SCE Interconnection	226,670	
Miscellanious Equipment and Materials	480,530	
Equipment and Materials Subtotal	**3,780,720**	
Balance of Scope of Supply		
Engineering	361,090	808,270
Project Management	308,310	
Construction	1,212,170	
Commissioning	138,870	
Scope of Supply Balance Total	**2,020,440**	
Total	**5,801,160**	

Houweling Nurseries Oxnard, Inc

Natural Gas Consumption Report — Assumed Boiler Efficiency: 90% — Bin One GR LT Hours: 5 (June thru September) — GR LT Load: 11,377 kW — 739,228

Fiscal 2012/Fiscal 2013 — Average Run Time: 129 76.67% — bin Two GR LT Hours: 10 (Oct, Nov, Apr, May) — Cogen #2 518 kW — 739,228

Hrly Fuel — Hours per week: 168 — Bin Three GR LT Hours: 11 (December thru March) — Total: 1,553 kW

	Week	Wk Fuel (million)	Average (million)	Hrs/week	Bin	WK GR LT Hours	GR LT RT BLK	Run Hours Left	FIT OP Run Hours	Run Hours Left	FIT MP Run Hours	Run Hours Left	FIT OFFP Run Hours	Run Hours Left	CO2 Hours	FIT Sales GR LTS ON (KwH) OFFP	SOFFP	Wkly Hours Hours of Operation	Hours Available
Aug	35	1659	9.88	76	1	35	Off Peak	41	30	11	11	0	0		41	18,118		76	168
Sept	1	1744	10.38	80	1	35	Off Peak	45	30	15	15	0	0		45	18,118		80	168
Sept	2	1906	11.35	87	1	35	Off Peak	52	30	22	22	0	0		52	18,118		87	168
Sept	3	2005	11.94	92	1	35	Off Peak	57	30	27	27	0	0		57	18,118		92	168
Sept	4	2139	12.73	98	1	35	Off Peak	63	30	33	33	0	0		60	18,118		98	168
Sept	5	2441	14.53	111	1	35	Off Peak	76	30	46	45	1	1		61	18,118		111	168
Oct	6	2089	12.43	95	2	70	Off Peak	25	0	25	25	0	0	0	25	14,495	21,742	95	168
Oct	7	2473	14.72	113	2	70	Off Peak	43	0	43	43	0	0	0	43	14,495	21,742	113	168
Oct	8	2969	17.67	136	2	70	Off Peak	66	0	66	65	1	1	0	46	14,495	21,742	136	168
Oct	9	3341	19.89	153	2	70	Off Peak	83	0	83	65	18	18	0	63	14,495	21,742	153	168
Nov	10	4344	25.86	168	2	70	Off Peak	98	0	98	65	33	33	0	63	14,495	21,742	168	168
Nov	11	3885	23.13	168	2	70	Off Peak	98	0	98	65	33	33	0	63	14,495	21,742	168	168
Nov	12	5007	29.80	168	2	70	Off Peak	98	0	98	65	33	33	0	63	14,495	21,742	168	168
Nov	13	4647	27.66	168	2	70	Off Peak	98	0	98	65	33	33	0	63	14,495	21,742	168	168
Dec	14	6531	38.88	168	3	77	Off Peak	91	0	91	65	26	26	0	63	18,118	21,742	168	168
Dec	15	5991	35.66	168	3	77	Off Peak	91	1	90	65	25	25	0	63	18,118	21,742	168	168
Dec	16	5432	32.33	168	3	77	Off Peak	91	2	89	65	24	24	0	63	18,118	21,742	168	168
Dec	17	5432	32.33	168	3	77	Off Peak	91	3	88	65	23	23	0	63	18,118	21,742	168	168
Jan	18	5432	32.33	168	3	77	Off Peak	91	4	87	65	22	22	0	63	18,118	21,742	168	168
Jan	19	5432	32.33	168	3	77	Off Peak	91	5	86	65	21	21	0	63	18,118	21,742	168	168
Jan	20	5313	31.62	168	3	77	Off Peak	91	6	85	65	20	20	0	63	18,118	21,742	168	168
Jan	21	4161	24.76	168	3	77	Off Peak	91	7	84	65	19	19	0	63	18,118	21,742	168	168
Feb	22	4737	28.19	168	3	77	Off Peak	91	8	83	65	18	18	0	63	18,118	21,742	168	168
Feb	23	4737	28.19	168	3	77	Off Peak	91	9	82	65	17	17	0	62	18,118	21,742	168	168
Feb	24	4846	28.84	168	3	77	Off Peak	91	10	81	65	16	16	0	61	18,118	21,742	168	168
Feb	25	3633	21.62	166	3	77	Off Peak	89	11	77.96091	65	13	13	0	58	18,118	21,742	166	168
Feb	26	4481	26.67	168	3	77	Off Peak	91	12	79	65	14	14	0	59	18,118	21,742	168	168
Mar	27	3902	23.22	168	3	77	Off Peak	91	13	78	65	13	13	0	58	18,118	21,742	168	168
Mar	28	3409	20.29	156	3	77	Off Peak	79	14	65	65	0	0	0	45	18,118	21,742	156	168
Mar	29	3689	21.96	168	3	77	Off Peak	91	15	76	65	11	11	0	56	18,118	21,742	168	168
Mar	30	3936	23.43	168	3	77	Off Peak	91	16	75	65	10	10	0	55	18,118	21,742	168	168
April	31	3535	21.04	162	2	70	Off Peak	92	0	92	65	27	27	0	63	14,495	21,742	162	168
April	32	4265	25.39	168	2	70	Off Peak	98	0	98	65	33	33	0	63	14,495	21,742	168	168
April	33	3173	18.88	145	2	70	Off Peak	75	0	75	65	10	10	0	55	14,495	21,742	145	168
April	34	2832	16.85	129	2	70	Off Peak	59	0	59	59	0	0	0	45	14,495	21,742	129	168
May	35	2819	16.78	129	2	70	Off Peak	59	0	59	59	0	0	0	45	14,495	21,742	129	168
May	36	2580	15.36	118	2	70	Off Peak	48	0	48	48	0	0	0	45	14,495	21,742	118	168
May	37	2652	15.79	121	2	70	Off Peak	51	0	51	51	0	0	0	45	14,495	21,742	121	168
May	38	2276	13.55	104	2	70	Off Peak	34	0	34	34	0	0	0	34	14,495	21,742	104	168
May	39	2503	14.90	114	2	70	Off Peak	44	0	44	44	0	0	0	44	14,495	21,742	114	168
June	40	2187	13.02	100	1	35	Off Peak	65	30	35	35	0	0		60	18,118		100	168
June	41	1718	10.22	78	1	35	Off Peak	43	30	13	13	0	0		43	18,118		78	168
June	42	1767	10.52	81	1	35	Off Peak	46	30	16	16	0	0		46	18,118		81	168
June	43	2040	12.14	93	1	35	Off Peak	58	30	28	28	0	0		58	18,118		93	168
July	44	1841	10.96	84	1	35	Off Peak	49	30	19	19	0	0		49	18,118		84	168
July	45	2102	12.51	96	1	35	Off Peak	61	30	31	31	0	0		60	18,118		96	168
July	46	2030	12.08	93	1	35	Off Peak	58	30	28	28	0	0		58	18,118		93	168
July	47	2157	12.84	99	1	35	Off Peak	64	30	34	34	0	0		60	18,118		99	168
Aug	48	2150	12.80	98	1	35	Off Peak	63	30	33	33	0	0		60	18,118		98	168
Aug	49	1834	10.91	84	1	35	Off Peak	49	30	19	19	0	0		49	18,118		84	168
Aug	50	1656	9.86	76	1	35	Off Peak	41	30	11	11	0	0		41	18,118		76	168
Aug	51	1669	9.93	76	1	35	Off Peak	41	30	11	11	0	0		41	18,118		76	168
Aug	52	1766	10.51	81	1	35	Off Peak	46	30	16	16	0	0		46	18,118		81	168
Sept	1	2259	13.44	103	1	35	Off Peak	68	30	38	38	0	0		60	18,118		103	168
Sept	2	1938	11.54	89	1	35	Off Peak	54	30	24	24	0	0		54	18,118		89	168
Sept	3	2270	13.51	104	1	35	Off Peak	69	30	39	39	0	0		60	18,118		104	168
Sept	4	2910	17.32	133	1	35	Off Peak	98	30	68	45	23	23		83	18,118		133	168
Sept	5	2439	14.52	111	1	35	Off Peak	76	30	46	45	1	1		61	18,118		111	168
Oct	6	2477	14.74	113	2	70	Off Peak	43	0	43	43	0	0	0	43	14,495	21,742	113	168
Oct	7	2855	16.99	130	2	70	Off Peak	60	0	60	60	0	0	0	45	14,495	21,742	130	168
Oct	8	3869	23.03	168	2	70	Off Peak	98	0	98	65	33	33	0	63	14,495	21,742	168	168
Oct	9	4763	28.35	168	2	70	Off Peak	98	0	98	65	33	33	0	63	14,495	21,742	168	168
Nov	10	5026	29.92	168	2	70	Off Peak	98	0	98	65	33	33	0	63	14,495	21,742	168	168
Nov	11	5994	35.68	168	2	70	Off Peak	98	0	98	65	33	33	0	63	14,495	21,742	168	168
Nov	12	3532	21.02	161	2	70	Off Peak	91	0	91	65	26	26	0	63	14,495	21,742	161	168
Nov	13	3681	21.91	168	2	70	Off Peak	98	0	98	65	33	33	0	63	14,495	21,742	168	168
Dec	14	3793	22.58	168	3	77	Off Peak	91	14	77	65	12	12	0	57	18,118	21,742	168	168
Dec	15	4919	29.28	168	3	77	Off Peak	91	14	77	65	12	12	0	57	18,118	21,742	168	168
Dec	16	5821	34.65	168	3	77	Off Peak	91	14	77	65	12	12	0	57	18,118	21,742	168	168
Dec	17	5492	32.69	168	3	77	Off Peak	91	14	77	65	12	12	0	57	18,118	21,742	168	168
Jan	18	6338	37.72	168	3	77	Off Peak	91	14	77	65	12	12	0	57	18,118	21,742	168	168
Jan	19	6390	38.04	168	3	77	Off Peak	91	14	77	65	12	12	0	57	18,118	21,742	168	168
Jan	20	5307	31.59	168	3	77	Off Peak	91	14	77	65	12	12	0	57	18,118	21,742	168	168
Jan	21	3696	22.00	168	3	77	Off Peak	91	14	77	65	12	12	0	57	18,118	21,742	168	168
Jan	22	5128	30.53	168	3	77	Off Peak	91	14	77	65	12	12	0	57	18,118	21,742	168	168
Feb	23	4477	26.65	168	3	77	Off Peak	91	14	77	65	12	12	0	57	18,118	21,742	168	168
Feb	24	4841	28.82	168	3	77	Off Peak	91	14	77	65	12	12	0	57	18,118	21,742	168	168
Feb	25	4712	28.05	168	3	77	Off Peak	91	14	77	65	12	12	0	57	18,118	21,742	168	168
Feb	26	3966	23.60	168	3	77	Off Peak	91	14	77	65	12	12	0	57	18,118	21,742	168	168
March	27	3292	19.59	150	3	77	Off Peak	73	14	59	59	0	0	0	45	18,118	21,742	150	168
March	28	3527	20.99	161	3	77	Off Peak	84	14	70	65	5	5	0	50	18,118	21,742	161	168
March	29	3389	20.17	155	3	77	Off Peak	78	14	64	64	0	0	0	45	18,118	21,742	155	168
March	30	3688	21.95	168	3	77	Off Peak	91	14	77	65	12	12	0	57	18,118	21,742	168	168
April	31	3007	17.90	137	2	70	Off Peak	67	0	67	65	2	2	0	47	14,495	21,742	137	168
April	32	2932	17.45	134	2	70	Off Peak	64	0	64	64	0	0	0	45	14,495	21,742	134	168
April	33	3604	21.45	165	2	70	Off Peak	95	0	95	65	30	30	0	63	14,495	21,742	165	168
April	34	2765	16.46	126	2	70	Off Peak	56	0	56	56	0	0	0	45	14,495	21,742	126	168
May	35	2414	14.37	110	2	70	Off Peak	40	0	40	40	0	0	0	40	14,495	21,742	110	168
May	36	2196	13.07	100	2	70	Off Peak	30	0	30	30	0	0	0	30	14,495	21,742	100	168
May	37	2003	11.92	92	2	70	Off Peak	22	0	22	22	0	0	0	22	14,495	21,742	92	168
May	38	1901	11.31	87	2	70	Off Peak	17	0	17	17	0	0	0	17	14,495	21,742	87	168
May	39	1798	10.70	82	2	70	Off Peak	12	0	12	12	0	0	0	12	14,495	21,742	82	168
June	40	1819	10.83	83	1	35	Off Peak	48	30	18	18	0	0		48	18,118		83	168
June	41	1708	10.17	78	1	35	Off Peak	43	30	13	13	0	0		43	18,118		78	168
June	42	1772	10.55	81	1	35	Off Peak	46	30	16	16	0	0		46	18,118		81	168
June	43	1687	10.04	77	1	35	Off Peak	42	30	12	12	0	0		42	18,118		77	168
July	44	937	5.58	43	1	35	Off Peak	8	8	0	0	0	0		8	18,118		43	168
July	45	1194	7.11	55	1	35	Off Peak	20	20	0	0	0	0		20	18,118		55	168
July	46	1686	10.04	77	1	35	Off Peak	42	30	12	12	0	0		42	18,118		77	168
July	47	1488	8.86	68	1	35	Off Peak	33	30	3	3	0	0		33	18,118		68	168
aug	48	1816	10.81	83	1	35	Off Peak	48	30	18	18	0	0		48	18,118		83	168
aug	49	1645	9.79	75	1	35	Off Peak	40	30	10	10	0	0		40	18,118		75	168
aug	50	1697	10.10	78	1	35	Off Peak	43	30	13	13	0	0		43	18,118		78	168
aug	51	1767	10.52	81	1	35	Off Peak	46	30	16	16	0	0		46	18,118		81	168
				13,396		6258			1,421		4,783				Period CO2 Hours:	5377		For Two Weeks: 13,396	
															934			Weekly 6,698	
				Power Used On Site:		23,732									FIT Sales w/ Grow Lights on:	3,240	MWh	Check: 76.46%	
										13,396					FIT Sales w/ Grow Lights Off:	30,767	MWh		
				13,784											Total:	34,006	MWh		

	Availability	Daily Lighting Hours
Bin 1 (June thru Sept)	51%	5
Bin 2 (Oct, Nov, April, May)	81%	10
Bin 3 (Nov thru March)	99%	11

Year:	0	1	2	3	4	5	6	7	8	9	10	11	12	13	14	15
Revenue																
Power Cost Savings	2,288,520	$1,144,260	$1,201,473	$1,261,547	$1,324,624	$1,390,855	$1,460,398	$1,533,418	$1,610,089	$1,690,593	$1,775,123	$1,863,879	$1,957,073	$2,054,927	$2,157,673	$2,265,557
Power Sales	1,972,206	$986,103	$1,036,091	$1,073,400	$1,073,400	$1,106,387	$1,142,918	$1,180,485	$1,217,089	$1,254,592	$1,291,691	$1,328,170	$1,363,829	$1,399,563	$1,426,709	$1,454,670
Boiler Fuel Cost Savings	1,497,243	$748,621	$811,405	$864,778	$860,735	$909,801	$958,198	$1,008,079	$1,057,155	$1,107,580	$1,157,866	$1,207,777	$1,257,096	$1,313,135	$1,340,710	$1,388,740
SGIP Incentive	-	$0	$0	$0	$0	$0										
	79,131	$39,566	$40,555	$41,569	$42,608	$43,673	$44,765	$45,884	$47,031	$48,207	$49,412	$50,647	$51,914	$53,212	$54,542	$55,905
CO2 Savings	467,084	$233,542	$239,380	$245,365	$251,499	$257,787	$264,231	$270,837	$277,608	$284,548	$291,662	$298,953	$306,427	$314,088	$321,940	$329,989
Total Energy Savings	6,304,184	$3,152,092	$3,328,905	$3,486,658	$3,552,866	$3,708,503	$3,870,510	$4,038,703	$4,208,972	$4,385,520	$4,565,753	$4,749,427	$4,936,339	$5,134,923	$5,301,574	$5,494,861
	-															
Costs	-															
CHP Fuel Expense	2,295,260	$1,147,630	$1,260,067	$1,346,874	$1,357,405	$1,436,281	$1,522,953	$1,612,282	$1,700,172	$1,790,475	$1,880,530	$1,969,915	$2,058,238	$2,147,362	$2,219,493	$2,293,995
Maintenance Expense	732,641	$366,320	$375,478	$384,865	$394,487	$404,349	$414,458	$424,819	$435,440	$446,326	$457,484	$468,921	$480,644	$492,660	$504,977	$517,601
Ad Valorem Taxes	104,421	$52,210	$66,914	$66,914	$66,914	$66,914	$66,914	$66,914	$66,914	$66,914	$66,914	$66,914	$66,914	$66,914	$66,914	$66,914
Departing Load and Standby Charges	433,922	$216,961	$227,809	$239,199	$251,159	$263,717	$276,903	$290,748	$305,286	$320,550	$336,578	$353,407	$371,077	$389,631	$409,112	$429,568
Insurance:	30,000	$15,000	$15,375	$15,759	$16,153	$16,557	$16,971	$17,395	$17,830	$18,276	$18,733	$19,201	$19,681	$20,173	$20,678	$21,195
Debt Service	-	$0	$0	$0	$0	$0	$0	$0	$0	$0	$0	$0	$0	$0	$0	$0
Total Operating Costs	3,596,244	$1,798,122	$1,945,643	$2,053,612	$2,086,118	$2,187,819	$2,298,199	$2,412,159	$2,525,641	$2,642,541	$2,760,238	$2,878,357	$2,996,554	$3,116,740	$3,221,174	$3,329,272
Operating Income		$1,353,970	1,383,262	1,433,046	1,466,748	1,520,685	1,572,311	1,626,544	1,683,331	1,742,979	1,805,515	1,871,070	1,939,785	2,018,183	2,080,400	2,165,588
Interest		$0	$0	$0	$0	$0	$0	$0	$0	$0	$0	$0	$0	$0	$0	$0
Depreciation		$939,788	$1,503,661	$902,196	$541,318	$541,318	$270,659	$0	$0	$0	$0	$0	$0	$0	$0	$0
State Taxable Income:		$414,182	(120,399)	$530,850	$925,430	$979,367	$1,301,652	$1,626,544	$1,683,331	$1,742,979	$1,805,515	$1,871,070	$1,939,785	$2,018,183	$2,080,400	$2,165,588
State Tax		$38,519	($11,197)	$49,369	$86,065	$91,081	$121,054	$151,269	$156,550	$162,097	$167,913	$174,010	$180,400	$187,691	$193,477	$201,400
Federal Taxable Income		$375,663	($109,202)	$481,481	$839,365	$888,286	$1,180,598	$1,475,275	$1,526,781	$1,580,882	$1,637,602	$1,697,060	$1,759,385	$1,830,492	$1,886,923	$1,964,189
Federal Tax		$131,482	($38,221)	$168,518	$293,778	$310,900	$413,209	$516,346	$534,373	$553,309	$573,161	$593,971	$615,785	$640,672	$660,423	$687,466
Total Taxes		$170,001	($49,418)	$217,887	$379,843	$401,981	$534,263	$667,615	$690,923	$715,406	$741,074	$767,981	$796,185	$828,363	$853,900	$888,866
After Tax Cash Flow:	($3,521,044)	$1,183,969	$1,432,680	$1,215,159	$1,086,905	$1,118,704	$1,038,048	$958,929	$992,408	$1,027,573	$1,064,441	$1,103,089	$1,143,600	$1,189,820	$1,226,500	$1,276,723
			$2,616,649	$3,831,807	$4,918,712	$6,037,416										
Amortization		-	-	-	-	-	-	-	-	-	-	-	-	-	-	-

After Tax IRR	**33.27%**
Years to Capital Recovery:	**2.74**

Debt Ratio	0.00%
Property Tax Rate	1.00%
Federal Income Tax Rate	35.00%
State Income Tax Rate	9.30%
Debt Term	15 years
Loan Interest	4.00%
General Inflator	2.50%
Added Electric Inflator	2.50%
Added Fuel Inflator	0.00%
Tax Credit	10.00%
CEC and SCG Grant:	$1,400,000
Present Worth of Salvage Value:	$300,000
Rule 38	$0

6.50

Commodity Cost:	3.85	4.24	4.53	4.53	4.79	5.08	5.37	5.66	5.95	6.24	6.53	6.81	7.09	7.30	7.52
Nominal GTF-5 All in:	4.21	4.60	4.90	4.90	5.15	5.44	5.73	6.02	6.32	6.61	6.89	7.17	7.45	7.66	7.88
Nominal GTF-3 All in:	4.95	5.34	5.63	5.63	5.89	6.18	6.47	6.76	7.05	7.34	7.63	7.91	8.19	8.40	8.62
Keith's Escalators:	10.17%	6.89%	0.00%	5.70%	5.97%	5.80%	5.34%	5.19%	4.88%	4.58%	4.28%	4.11%	3.00%	3.00%	3.00%
CO2 Surcharge:	0.63624	0.652146	0.66844965	0.685160891	0.702289914	0.719847161	0.73784334	0.756289424	0.77519666	0.794576576	0.81444099	0.834802015	0.855672066	0.877063867	0.898990464

Year:	0	1	2	3	4	5	6	7	8	9	10	11	12	13	14	15
Revenue																
Power Cost Savings	2,288,520	$1,144,260	$1,201,473	$1,261,547	$1,324,624	$1,390,855	$1,460,398	$1,533,418	$1,610,089	$1,690,593	$1,775,123	$1,863,879	$1,957,073	$2,054,927	$2,157,673	$2,265,557
Power Sales	1,972,206	$986,103	$1,036,091	$1,073,400	$1,073,400	$1,106,387	$1,142,918	$1,180,485	$1,217,089	$1,254,592	$1,291,691	$1,328,170	$1,363,829	$1,399,563	$1,426,709	$1,454,670
Boiler Fuel Cost Savings	1,497,243	$748,621	$811,405	$864,778	$860,735	$909,801	$958,198	$1,008,079	$1,057,155	$1,107,580	$1,157,866	$1,207,777	$1,257,096	$1,313,135	$1,340,710	$1,388,740
SGIP Incentive	-	$0	$0	$0	$0	$0										
	79,131	$39,566	$40,555	$41,569	$42,608	$43,673	$44,765	$45,884	$47,031	$48,207	$49,412	$50,647	$51,914	$53,212	$54,542	$55,905
CO2 Savings	467,084	$233,542	$239,380	$245,365	$251,499	$257,787	$264,231	$270,837	$277,608	$284,548	$291,662	$298,953	$306,427	$314,088	$321,940	$329,989
Total Energy Savings	6,304,184	$3,152,092	$3,328,905	$3,486,658	$3,552,866	$3,708,503	$3,870,510	$4,038,703	$4,208,972	$4,385,520	$4,565,753	$4,749,427	$4,936,339	$5,134,923	$5,301,574	$5,494,861
	-															
Costs	-															
CHP Fuel Expense	2,295,260	$1,147,630	$1,260,067	$1,346,874	$1,357,405	$1,436,281	$1,522,953	$1,612,282	$1,700,172	$1,790,475	$1,880,530	$1,969,915	$2,058,238	$2,147,362	$2,219,493	$2,293,995
Maintenance Expense	732,641	$366,320	$375,478	$384,865	$394,487	$404,349	$414,458	$424,819	$435,440	$446,326	$457,484	$468,921	$480,644	$492,660	$504,977	$517,601
Ad Valorem Taxes	104,421	$52,210	$66,914	$66,914	$66,914	$66,914	$66,914	$66,914	$66,914	$66,914	$66,914	$66,914	$66,914	$66,914	$66,914	$66,914
Departing Load and Standby Charges	433,922	$216,961	$227,809	$239,199	$251,159	$263,717	$276,903	$290,748	$305,286	$320,550	$336,578	$353,407	$371,077	$389,631	$409,112	$429,568
Insurance:	30,000	$15,000	$15,375	$15,759	$16,153	$16,557	$16,971	$17,395	$17,830	$18,276	$18,733	$19,201	$19,681	$20,173	$20,678	$21,195
Debt Service	-	$0	$0	$0	$0	$0	$0	$0	$0	$0	$0	$0	$0	$0	$0	$0
Total Operating Costs	3,596,244	$1,798,122	$1,945,643	$2,053,612	$2,086,118	$2,187,819	$2,298,199	$2,412,159	$2,525,641	$2,642,541	$2,760,238	$2,878,357	$2,996,554	$3,116,740	$3,221,174	$3,329,272
Operating Income		$1,353,970	1,383,262	1,433,046	1,466,748	1,520,685	1,572,311	1,626,544	1,683,331	1,742,979	1,805,515	1,871,070	1,939,785	2,018,183	2,080,400	2,165,588
Interest		$0	$0	$0	$0	$0	$0	$0	$0	$0	$0	$0	$0	$0	$0	$0
Depreciation		$939,788	$1,503,661	$902,196	$541,318	$541,318	$270,659	$0	$0	$0	$0	$0	$0	$0	$0	$0
State Taxable Income:		$414,182	(120,399)	$530,850	$925,430	$979,367	$1,301,652	$1,626,544	$1,683,331	$1,742,979	$1,805,515	$1,871,070	$1,939,785	$2,018,183	$2,080,400	$2,165,588
State Tax		$38,519	($11,197)	$49,369	$86,065	$91,081	$121,054	$151,269	$156,550	$162,097	$167,913	$174,010	$180,400	$187,691	$193,477	$201,400
Federal Taxable Income		$375,663	($109,202)	$481,481	$839,365	$888,286	$1,180,598	$1,475,275	$1,526,781	$1,580,882	$1,637,602	$1,697,060	$1,759,385	$1,830,492	$1,886,923	$1,964,189
Federal Tax		$131,482	($38,221)	$168,518	$293,778	$310,900	$413,209	$516,346	$534,373	$553,309	$573,161	$593,971	$615,785	$640,672	$660,423	$687,466
Total Taxes		$170,001	($49,418)	$217,887	$379,843	$401,981	$534,263	$667,615	$690,923	$715,406	$741,074	$767,981	$796,185	$828,363	$853,900	$888,866
After Tax Cash Flow:	($4,921,044)	$1,183,969	$1,432,680	$1,215,159	$1,086,905	$1,118,704	$1,038,048	$958,929	$992,408	$1,027,573	$1,064,441	$1,103,089	$1,143,600	$1,189,820	$1,226,500	$1,276,723
			$2,616,649	$3,831,807	$4,918,712	$6,037,416										
Amortization		-	-	-	-	-	-	-	-	-	-	-	-	-	-	-

After Tax IRR	**22.64%**
Years to Capital Recovery:	**4.00**

Debt Ratio	0.00%	
Property Tax Rate	1.00%	
Federal Income Tax Rate	35.00%	
State Income Tax Rate	9.30%	
Debt Term	15	years
Loan Interest	4.00%	
General Inflator	2.50%	
Added Electric Inflator	2.50%	
Added Fuel Inflator	0.00%	
Tax Credit	10.00%	
Present Worth of Salvage Value:	$300,000	
Rule 38	$0	

6.50

Commodity Cost:															
Nominal GTF-5 All in:	3.85	4.24	4.53	4.53	4.79	5.08	5.37	5.66	5.95	6.24	6.53	6.81	7.09	7.30	7.52
Nominal GTF-3 All in:	4.21	4.60	4.90	4.90	5.15	5.44	5.73	6.02	6.32	6.61	6.89	7.17	7.45	7.66	7.88
Keith's Escalators:	4.95	5.34	5.63	5.63	5.89	6.18	6.47	6.76	7.05	7.34	7.63	7.91	8.19	8.40	8.62
	10.17%	6.89%	0.00%	5.70%	5.97%	5.80%	5.34%	5.19%	4.88%	4.58%	4.28%	4.11%	3.00%	3.00%	3.00%
CO2 Surcharge:															
	0.63624	0.652146	0.66844965	0.685160891	0.702289914	0.719847161	0.73784334	0.756289424	0.77519666	0.794576576	0.81444099	0.834802015	0.855672066	0.877063867	0.898990464

Initial Investment	$4,921,044
After Tax IRR	22.64%
Years to Capital Recovery	4.0

Month	Days	Weekend Days	Holidays	Weekdays	Season	Hours Off-Peak	Hours Mid-Peak	Hours On-Peak	Saturdays	Sundays		
Jan	31	8	1	22	w	458	286	0	4	4		
Feb	28	8	1	19	w	425	247	0	4	4		
Mar	31	10		21	w	471	273	0	5	5		
Apr	30	8		22	w	434	286	0	4	4		
May	32	9	1	22	w	482	286	0	5	4		
Jun	29	9		20	s	396	180	120	4	5		
Jul	31	8	1	22	s	414	198	132	4	4		
Aug	31	9		22	s	414	198	132	5	5		
Sep	35	10	1	24	s	480	216	144	4	4	88	summer weekdays
Oct	26	7		19	w	377	247	0	4	4	165	winter weekdays
Nov	30	9	2	19	w	473	247	0	5	5	18	summer sundays
Dec	31	9	1	21	w	471	273	0	4	4	34	winter sundays
		104	8	253	Winter	3591	2145	0	52	52	18	summer saturdays
					Summer	1704	792	528			34	winter saturdays
				Customer				8760				
	Edison Seasons			Workday			365					
	Winter	Summer	1	2	3							

1. Applicable rate time periods are defined as follows:
On-Peak: Noon to 6:00 p.m. summer weekdays except holidays.
Mid-Peak: 8:00 a.m. to Noon and 6:00 p.m. to 11:00 p.m. summer weekdays except holidays.
8:00 a.m. to 9:00 p.m. winter weekdays except holidays.
Off-Peak: All other hours.
CPP Event Energy Charge Periods: 2:00 p.m. to 6:00 p.m. summer and winter weekdays except holidays during a CPP-Event only.

Holidays are New Year's Day (January 1), Presidents' Day (third Monday in February), Memorial Day (last Monday in May), Independence Day (July 4), Labor Day (first Monday in September), Veterans Day (November 11), Thanksgiving Day (fourth Thursday in November), and Christmas (December 25).

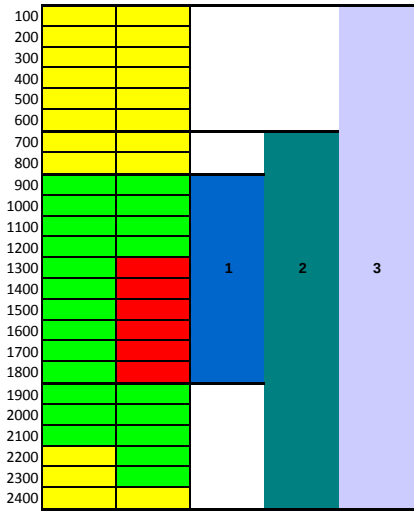

	Hours per Month			Working Hours per Month							
	Off Pk	Mid Pk	On Pk	Off Pk	Mid Pk	On Pk	mon	sat		winter	summer
JAN	458	286	0	290	286	0	4	4	mon	5	3
FEB	425	247	0	263	247	0	3	4	tue	11	9
MAR	471	273	0	291	273	0	5	5	wed	11	9
APR	434	286	0	290	286	0	4	4	thu	11	9
MAY	482	286	0	314	286	0	3	5	fri	11	9
JUN	396	180	120	222	180	120	5	4	sat	18	18
JUL	414	198	132	246	198	132	4	4			
AUG	414	198	132	264	198	132	4	5			
SEP	480	216	144	264	216	144	4	4			
OCT	377	247	0	257	247	0	4	4			
NOV	473	247	0	257	247	0	4	4			
DEC	471	273	0	273	273	0	5	4			
	5295	2937	528			528	49				
SoCalGas	5,196	3,041	523				6696				
	99		8760								
			8760								

Price of Gas

April	4/1/2014	49.26
March	3/1/2014	59.84
February	2/1/2014	51.6
January	1/1/2014	47.72
December	12/1/2013	40.84
November	11/1/2013	41.26
October	10/1/2013	37.38
September	9/1/2013	38.2
August	8/1/2013	42.8
July	7/1/2013	43.64
June	6/1/2013	47.07
May	5/1/2013	45.01
April	4/1/2013	42.96
March	3/1/2013	36.06
February	2/1/2013	39.37
January	1/1/2013	36.81
December	12/1/2012	40.36
November	11/1/2012	35.83
October	10/1/2012	31.54
September	9/1/2012	29.12
August	8/1/2012	33.48
July	7/1/2012	31.61
June	6/1/2012	31.73
May	5/1/2012	24.4
April	4/1/2012	25.1
March	3/1/2012	29.73
February	2/1/2012	29.67
January	1/1/2012	35.96
December	12/1/2011	38.35
November	11/1/2011	39.15
October	10/1/2011	42.21
September	9/1/2011	41.47
August	8/1/2011	49.55
July	7/1/2011	46.2
June	6/1/2011	48.36
May	5/1/2011	45.45
April	4/1/2011	46.02
March	3/1/2011	41.68
February	2/1/2011	47.38
January	1/1/2011	40.14
December	12/1/2010	43.85
November	11/1/2010	34.04
October	10/1/2010	39.94
September	9/1/2010	35.38
August	8/1/2010	46.72
July	7/1/2010	47.07
June	6/1/2010	41.58
May	5/1/2010	42.67
April	4/1/2010	44.55
March	3.1/2010	42.43
February	2/1/2010	59.33
January	1/1/2010	57.87
December	12/1/2009	49.79
November	11/1/2009	47.14

	Summer				Winter			
	Fixed	Variable	Multiplier	Total	Fixed	Variable	Multiplier	Total
On Peak	0.02104	0.032452	1.11	0.059376				
Mid Peak	0.02104	0.032452	1.13	0.060446	0.02104	0.032452	1.02	0.054562
Off Peak	0.02104	0.032452	0.96	0.051352	0.02104	0.032452	1	0.053492
Super Off Peak					0.02104	0.032452	0.92	0.049212

Delivered NG	$4.21	per MMBtu
Location Bonus:	10%	
Heat Rate:	6,924	Btu/kWh

	Summer	Winter
On Peak	0.059376	
Mid Peak	0.060446	0.054562
Off Peak	0.051352	0.053492
Super Off Peak		0.049212

TOD Period	Summer Jun 1st – Sep 30th	Winter Oct 1st – May 31st	Applicable Days
On-Peak	Noon – 6:00 p.m.	Not Applicable.	Weekdays except Holidays.
Mid-Peak	8:00 a.m. – Noon	8:00 a.m. - 9:00 p.m.	Weekdays except Holidays.
	6:00 p.m. – 11:00 p.m.		Weekdays except Holidays.
Off-Peak	11:00 p.m. – 8:00 a.m.	6:00 a.m. – 8:00 a.m.	Weekdays except Holidays.
		9:00 p.m. – Midnight	Weekdays except Holidays.
	Midnight – Midnight	6:00 a.m. – Midnight	Weekends and Holidays.
Super-Off-Peak	Not Applicable.	Midnight – 6:00 a.m.	Weekdays, Weekends and Holidays.

0.00001

Year	$/kwh
2012	0.00311
2013	0.00316
2014	0.00322
2015	0.00329
2016	0.00335
2017	0.00342
2018	0.00349
2019	0.00356
2020	0.00364

2012	-2	0.00311	0.00306	
2013	-1	0.00316	0.00313	0.022876
2014	0	0.00322	0.0032	0.022364
2015	1	0.00329	0.00327	0.021875
2016	2	0.00335	0.00334	0.021407
2017	3	0.00342	0.00341	0.020958
2018	4	0.00349	0.00348	0.020528
2019	5	0.00356	0.00355	0.020115
2020	6	0.00364	0.00362	0.019718
	7		0.00369	0.019337
	8		0.00376	0.01897
	9		0.00383	0.018617
	10		0.0039	0.018277
	11		0.00397	0.017949
	12		0.00404	0.017632
	13		0.00411	0.017327
	14		0.00418	0.017032
	15		0.00425	0.016746

0.00327

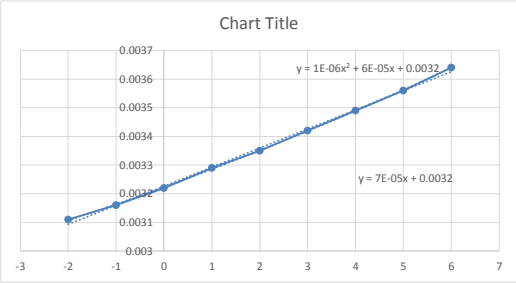

-2	0.02
-1	0.02033
0	0.02068
1	0.02104
2	0.0214
3	0.02142
4	0.02145
5	0.02147
6	0

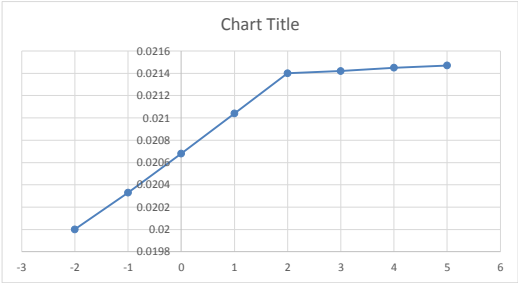

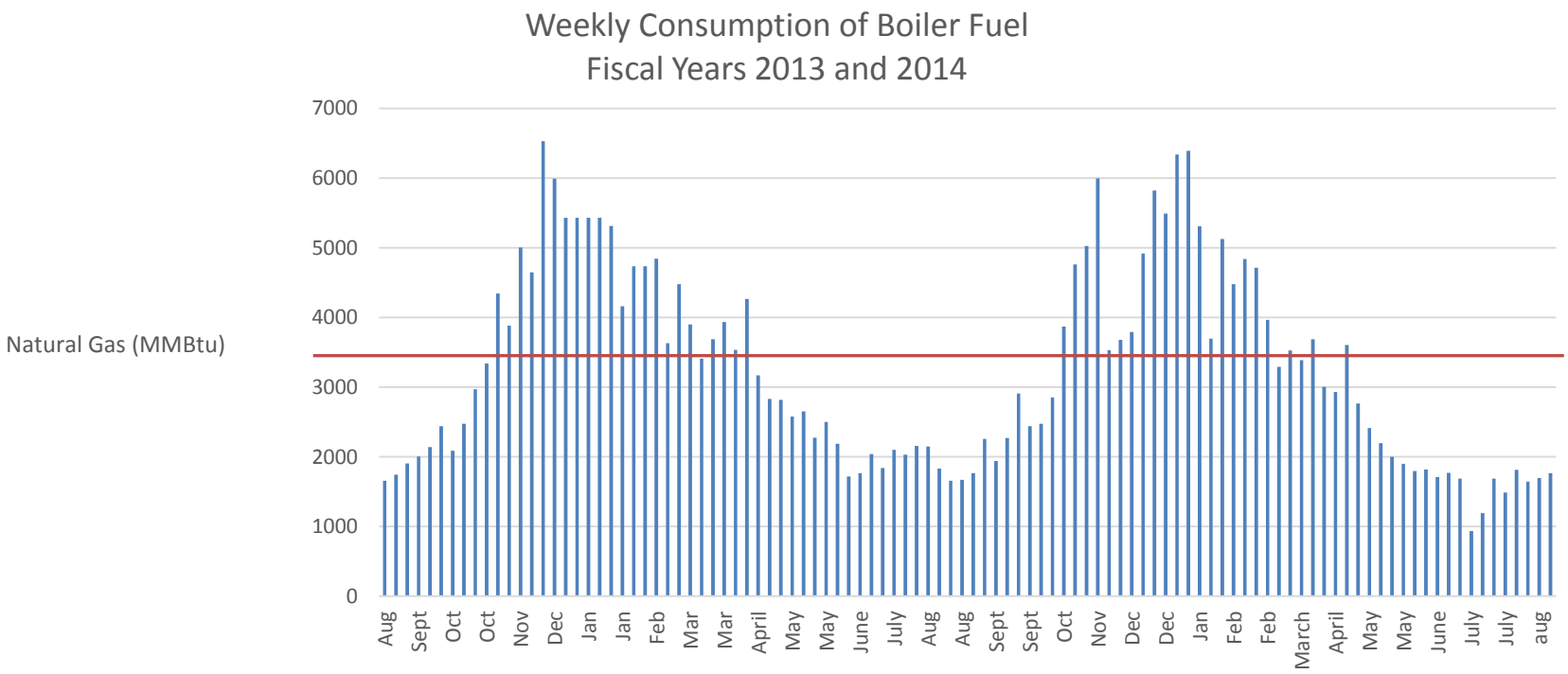
Weekly Consumption of Boiler Fuel
Fiscal Years 2013 and 2014
Natural Gas (MMBtu)
7000
6000
5000
4000
3000
2000
1000
0
Aug
Sept
Oct
Oct
Nov
Dec
Jan
Jan
Feb
Mar
Mar
April
May
May
June
July
Aug
Aug
Sept
Sept
Oct
Nov
Dec
Dec
Jan
Feb
Feb
March
April
May
May
June
July
July
aug