March 15, 2011

Mr. Michael Leaon
Mr. Harinder Singh
California Energy Commission
1516 Ninth Street
Sacramento, CA 95814

Subject: 2010 Rulemaking Proceeding Phase II on Appliance Efficiency Regulations
(Docket # 09-AAER-2)

Dear Messrs. Leaon and Singh:

Recently the California Energy Commission (CEC) held a second workshop on the topic of energy efficiency requirements for Battery Charging Systems. The CEC presented a draft Staff Report on the Staff's analysis of proposed energy efficiency requirements for these products. As a manufacturer of specialized and sophisticated non-consumer Battery Charging Systems, Motorola Solutions, Inc. (MSI) was pleased to attend the workshop and appreciates the opportunity to comment on the draft Staff Report. As small, non-consumer Battery Charging Systems are complex and vary greatly in functions and features, we understand that appropriate and effective regulation is a complex topic, and we look forward to a continuing dialogue regarding energy efficiency for Battery Charging Systems. In this letter, we offer comments on the current draft Staff Report.

It is the view of Motorola Solutions, Inc. (MSI) that the draft staff report analysis is based upon a flawed premise, further challenged by fundamentally unrealistic and in some cases unattainable requirements. The financial justification used by CEC is similarly flawed by the universal application of a solution technique that applies only to a small subgroup of chargers and ignores the real costs of attaining the requirements in a commercial product. The net result of these requirements in the CEC proposal will be dramatic changes in both the products available, and the prices that California public safety and commercial users pay.

In the draft Staff Report and in subsequent discussions and presentations, it has been made clear that CEC's proposal is based on the premise that many chargers continue to charge after the battery is fully charged, and a significant amount of energy is wasted in the form of heat. Lithium batteries, which are increasingly prolific due to the advantages of energy density and charge rate are by definition not subject to this problem. All lithium chargers must automatically switch off once the charge is complete. Furthermore, in order to prevent overcharge that reduces battery life, advanced nickel chargers also automatically switch off when the charge is complete. But the CEC is not simply requiring that chargers have the capability of monitoring the battery and switching off. Instead, the proposal translates the premise of wasteful overcharge into efficiency requirements that in anything but the simplest chargers are not realizable simply by having or implementing a switch. However, CEC bases all the financial justification on a simple "install a switch" solution that is either already present in most commercial chargers, or grossly oversimplified for the feature capabilities of the charging solution. Many advanced chargers will not pass the requirements even with the switching solutions already implemented. The following sections go into detail regarding the specific issues MSI has noted with the current CEC proposal.

1.0 The economic analysis used as a basis for the cost-benefit analysis contains significant errors

The data included in the CEC "model" on volumes of the products sold by Motorola Solutions, Inc. is incorrect.

The CEC "model" states the installed base of handheld scanners is 2.4 million units and the projected annual sales for 2010 is 380,000 units (down from 780,000 in the CASE report). No source is cited for this data in either the staff report or the CASE report.

Independent industry data reported by Venture Development Corporation (http://www.vdcresearch.com/) has very different numbers. For North America, the 2010 report shows annual sales for 2010 at 1.31 million units. Assume that Canada is 10% and the US is 90% of North America. California is approximately 13% of the US market, thus the number of units sold in California for 2010 would be about 153,300. Neither set of numbers distinguishes between corded (i.e. without batteries) and cordless handheld scanners. According to the VDC report, corded scanners are about 80% of the annual revenue of all scanners sold. As a major supplier of scanners (VDC says about 38% market share), we know that cordless scanners are about twice as expensive as corded scanners. Therefore the volume of cordless scanners sold is about 11% of the total, or about 17,000 cordless scanners per year in California. So on the face of it, the staff report cost savings in this product category are over-estimated by a factor of <u>at least</u> 22 (380,000 vs 17,000) simply based on the errors in the number of units purchased in California and the failure to differentiate based on corded vs cordless products.

Assuming energy savings of 20.18 Kwh per device (per the staff report Table B-6) 17,000 cordless scanner chargers would save 343,000 Kwh per year. At a rate of $0.14, this results in a potential energy savings to California customers of $48,000. This equates to $2.82 per scanner per year. With an 8 year design life, this equals about $22.56 per scanner

Motorola Solution's recently released DS6878 battery powered scanner with one slot cradle sells for about $600. The charger is built into the scanner. Depending on the final regulations as discussed below, we believe that re-design, more expensive components and re-certification costs will result in a price increase to California customers of 15-25%, or $90.00 to $150.00.

Thus, the benefit to cost ratio is, at the low end, 22.56/90 = 0.25, or 22.56/150 = .15. These values are far below the 40.7 as concluded in Table B-6, show no cost-benefit, and are very disadvantageous to California consumers.

In addition, the CEC model uses data for costs that are significantly under-estimated. The cost estimates used are based on the flawed assumption that the application of the simple solution technique espoused in the draft Staff Report (see page 16 of the draft Staff Report "The proposed regulations can be met by replacing the charge current controller in the battery chargers (sic) circuitry with a comparator and a transistor used as an on/off switch") will allow most Battery Charging Systems to come into compliance with the proposed efficiency requirements.

The CEC draft Staff Report response to comment 15 continues: "Efficient battery chargers require less energy to charge the batteries. The changes necessary to meet the proposed standards are in the battery charger circuitry and not in the battery. This extends the battery and charger life and therefore enhances performance of mission critical equipment. Turning off the chargers after the batteries are fully charged will reduce the heat produced in the batteries."

This demonstrates a fundamental lack of understanding of the current state of "small non-consumer" Battery Charging Systems available in the marketplace today. All MSI "small non-consumer" products currently on the market employ sophisticated electronic circuitry that reduces charge (in the case of NiCd and NiMH batteries) or eliminates charge to the batteries (in the case of Lithium Ion) once charging is complete. Even though we already employ this solution which is asserted several times in the draft Staff Report to be the only technique needed to bring most BCS products into compliance (see page12, 16, responses to comments #3, #4, #6, #9, #11, #12), we have no products in our portfolio which will meet the proposed limits without significant

modification. The proposed solution in reality applies to only a portion of Battery Charging Systems, and ignores the real costs of attaining the proposed requirements for complex BCS's such as ours. To go beyond the simple solution proposed by CEC will require the use of alternative techniques which are more complex and will require longer periods of time to accomplish. The costs associated with engineering re-design and subsequent product re-certifications is clearly NOT taken into account in the CASE report or draft Staff Report cost/benefit analysis. These costs far outweigh the costs associated with Bill-of-Material changes to such a degree that the potential cost savings to the California consumer (based on reduced energy consumption) are far exceeded by the costs.

The draft Staff Report "model" shows the modification cost per unit for MSI products to be $0.50. There is no detail on how that cost is derived in either the draft Staff Report or the CASE report, but the CASE report discussion of the topic (see section 7.1, page 41) notes only component/manufacturing costs. In addition, the draft Staff Report states on page 12 "As indicated in Table 5, the manufacturer does not totally redesign the products." Motorola Solutions therefore assumes the number used for cost reflects Bill-of-Material cost increases only. Motorola Solutions would like to further note that a question posed by stakeholders at the October 26, 2010 conference call asked for more detail on how the costs were calculated, and this request was re-iterated in the industry letter of November 1, 2010. To date there has been no response to this request.

Internal cost estimates per model for product re-certifications vary from $25,000 - $100,000 depending on exactly what is required by various regulatory bodies based on functions and features of the product. A comprehensive list of commonly-required certifications for Motorola Solutions, Inc. products was submitted to the California Energy commission in a letter dated Jan. 31, 2011. A copy of that letter can be found attached to this document in Appendix A.

The CEC draft Staff Report references a dialogue with UL that indicates full product re-certification would not be necessary if a product is only undergoing a simple component change, as espoused in the solution technique proposed by the CEC. While that may be true, section 2 of this document will go into great technical detail to explain why such a simple solution is not adequate or appropriate (and in some cases, not even safe) for our products. Therefore, more complex design changes will be needed, which will trigger re-certification requirements by all certification bodies involved with our products. As evidence, we have received a recent quote from UL to review and re-certify one of our simpler products (EPS only) to the applicable certification schemes based on changes to the design of the charging circuitry (we can supply a copy if desired, under a standard Non-Disclosure Agreement). This quote is in excess of $20,000. A product such as this will need similar re-certifications for the cradle and possibly for the terminal unit. Costs for those have not been quoted but would be similar. It is reasonable to assume that this is an average cost. MSI has (approximately) 16 different models of Battery Charging Systems for handheld barcode scanners. Assuming $45,000 of regulatory re-certification costs per system (minimum EPS plus cradle), this brings the total cost associated with regulatory re-certifications to $720,000. As stated above, MSI has approximately 38% of the market for these products which translates to 6460 units per year. With an 8 year lifespan, these costs would be spread over 51,680 units. Re-certification therefore costs approximately $14 per unit.

If we assume the same re-certification costs for two-way radios, and accept the CEC model's numbers for units sold in California, the cost per unit will be approximately $25.71 (note: exact market share of MSI cannot be disclosed without an NDA, but for the sake of this calculation we will use 50%). With an 8 year lifespan, this costs would be $3.21 per unit.

Furthermore, the draft Staff Report model does not take into account the engineering costs internal to the company to re-design the product, such as product design and testing/validation. Internal costs will vary based on the size and complexity of the product, but an average effort for one model would involve 4 engineers for approximately 6 months, or approximately 24 staff

months. Assuming the majority of this type of work would be done in a “low-cost” foreign engineering center, the cost for this work would be approximately $150,000 each for the EPS and for the cradle, per model. This comes out to $2.4 million engineering costs for barcode scanners, or $46 per unit and $6 million for two-way radios, or $21.42 per unit.

Table 1 Costs and Savings Associated with Draft Staff Report Proposal

Product	Component Costs (from CEC model)	Regulatory re-certification costs	Engineering costs	Total Costs	Total Savings (from CEC model)	Net Savings
Handheld Barcode Scanners	$0.50	$14.00	$46.00	$60.50	$19.87	-$40.63
Two-way Radios	$0.50	$3.21	$21.42	$25.13	$8.75	-$16.38

There is NO cost savings to the California consumer associated with the proposed regulation. Rather there is a significant cost INCREASE. This is in direct violation of the requirements of the Warren-Alquist Act, which states CEC appliance efficiency standards shall not result in any additional cost to the consumer. Motorola Solutions, Inc. would like to highlight that this would indicate that this regulation should not move forward for these products.

2.0 Design Changes and Power Factor Correction

The draft Staff Report offers several strategies beyond the simple “on/off switch” approach as additional means of achieving efficiency improvements. Some are applicable to small, non-consumer chargers. But none of the suggested changes are both effective and cost neutral, as they generally require large company-internal design, test and qualification efforts and resubmission to regulatory bodies for re-qualification and approval.

- **Hysteretic charging:** The draft Staff Report claims that this means of charging can reduce energy usage by using short pulses of high current to “maintain the battery’s voltage.” However, if the total charge delivered is held constant, it is clear that the I^2R energy losses are actually increased by replacing a constant current with a pulsed current. In fact, this is one of the main points of Appendix B of the 2010 CASE report, in which power factor correction is argued for. In addition, few if any Lithium Ion cell manufacturers specify a hysteretic charging profile.

- **Higher Internal System Voltages** may have some of the benefits mentioned by the report, but the fact that switching losses vary as the square of the voltages being switched works against these benefits.

- **Using Full instead of Half wave rectifiers** is already being done in our products.

- **Replacing linear power supplies with switchers** has effectively already been mandated by the level IV and V efficiency standards for external power supplies by the state of California and the European Union.

- **Substituting the entire linear battery charger with a switch mode design** is a change so extreme that they cannot be cost-neutral for the reasons explained above.

- **Resonant switching configuration** is applicable to large chargers (but not small ones) as mentioned in the draft Staff Report.

- **Synchronous Rectification** is employed in many of our switchers where advantageous and is generally good for a few percent of efficiency only.

- **Charge Control:** already in place in our products, as one cannot meet the requirements for charging a lithium ion cell without it.

- **Ferroresonant chargers:** None of our chargers employs this technology, which is generally better suited to large chargers. Such a radical design change would not be cost-neutral.

- **Silicon Controlled Rectifier:** Our chargers employ neither SCRs nor IGBTs.

In addition to the above, the CASE report provides an Appendix B entitled "Power Factor Discussion and Calculation Methodology" in which are recommended "two simple techniques to improve power factor." The first technique involves appropriately sizing the bridge rectifier filter capacitor in a switch mode power supply. The second involves setting the filter capacitor to a small value and controlling the switching in a manner so as to greatly increase the power factor of the circuit to a value somewhat near unity. Let's call the first technique "Capacitor Sizing" and the second "APFC" (for Active Power Factor Correction).

Capacitor Sizing

The CASE Report quite rightly notes that for a given input voltage and constant power load on a power supply rectifier capacitor shown in Figure B1 below, there is a value of capacitance which yields the highest possible power factor of .59. Please refer to figures B1, B3 and B4 reproduced below from that report.

Figure B1: Simplified Switch Mode Power Supply Schematic

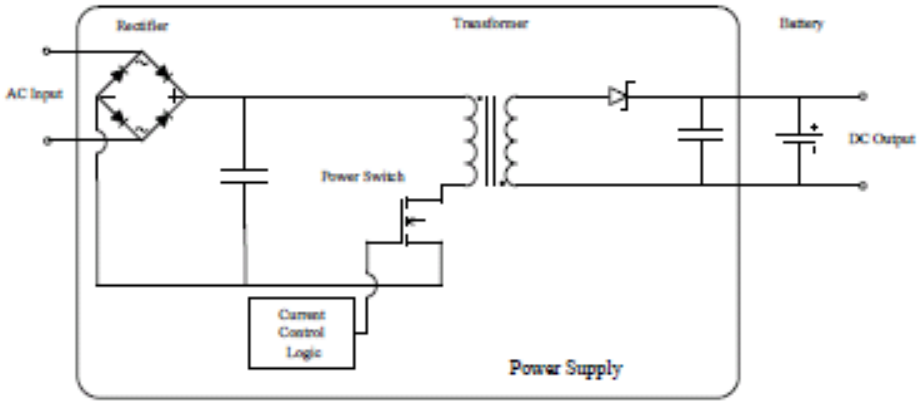

Figure B3: Switch mode waveforms with improved power factor

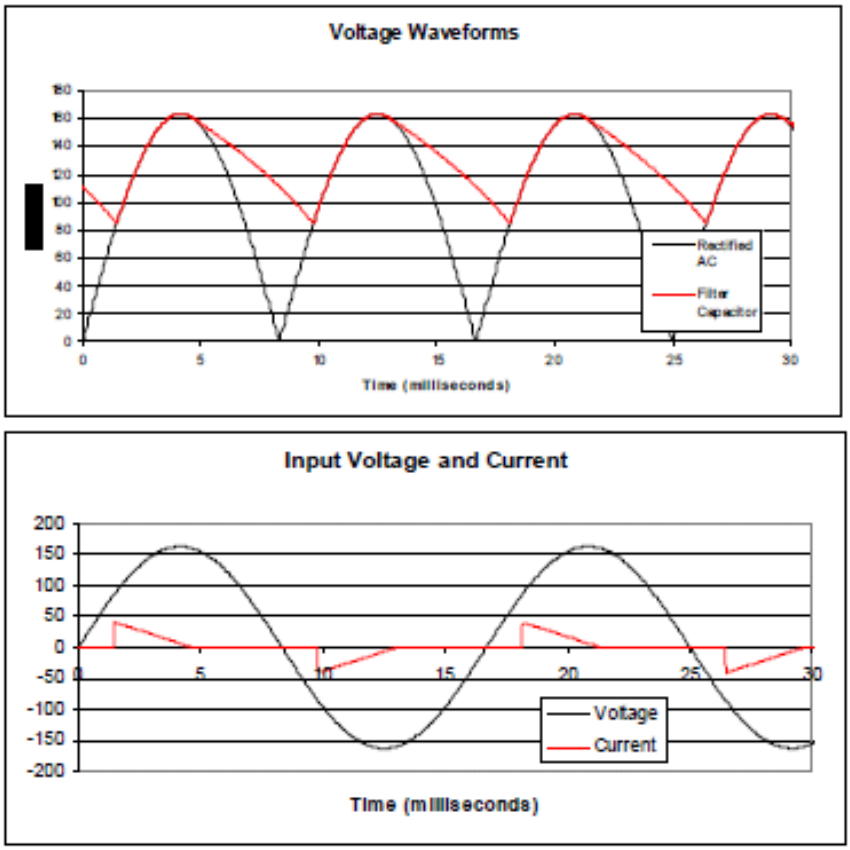

Figure B4: Optimum Filter Capacitor Selection

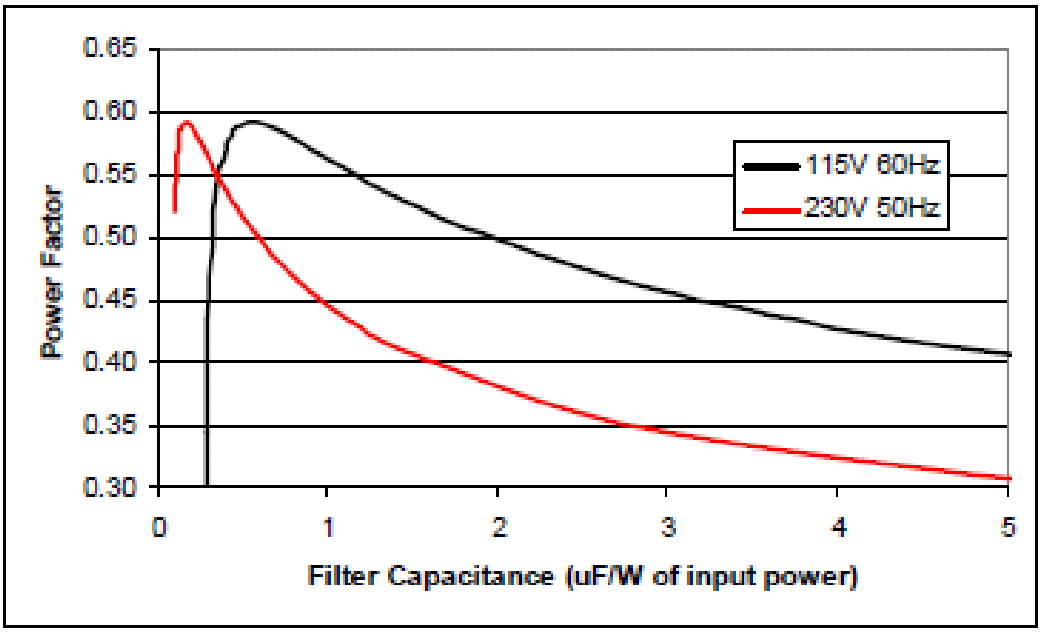

Motorola Solutions, Inc. has substantially confirmed the results[1] in Figures B3 and B4, assuming ideal rectifiers and an extremely low power supply Under Voltage Lock Out (UVLO) of 20 volts. A graph of some of Motorola Solutions, Inc.'s results is shown below. Appended to this graph are curves showing the lowest capacitor voltage reached throughout the AC power line cycle for each value of capacitance considered. An example of such variation in capacitor voltage can be seen in the top graph of Figure B3 above.

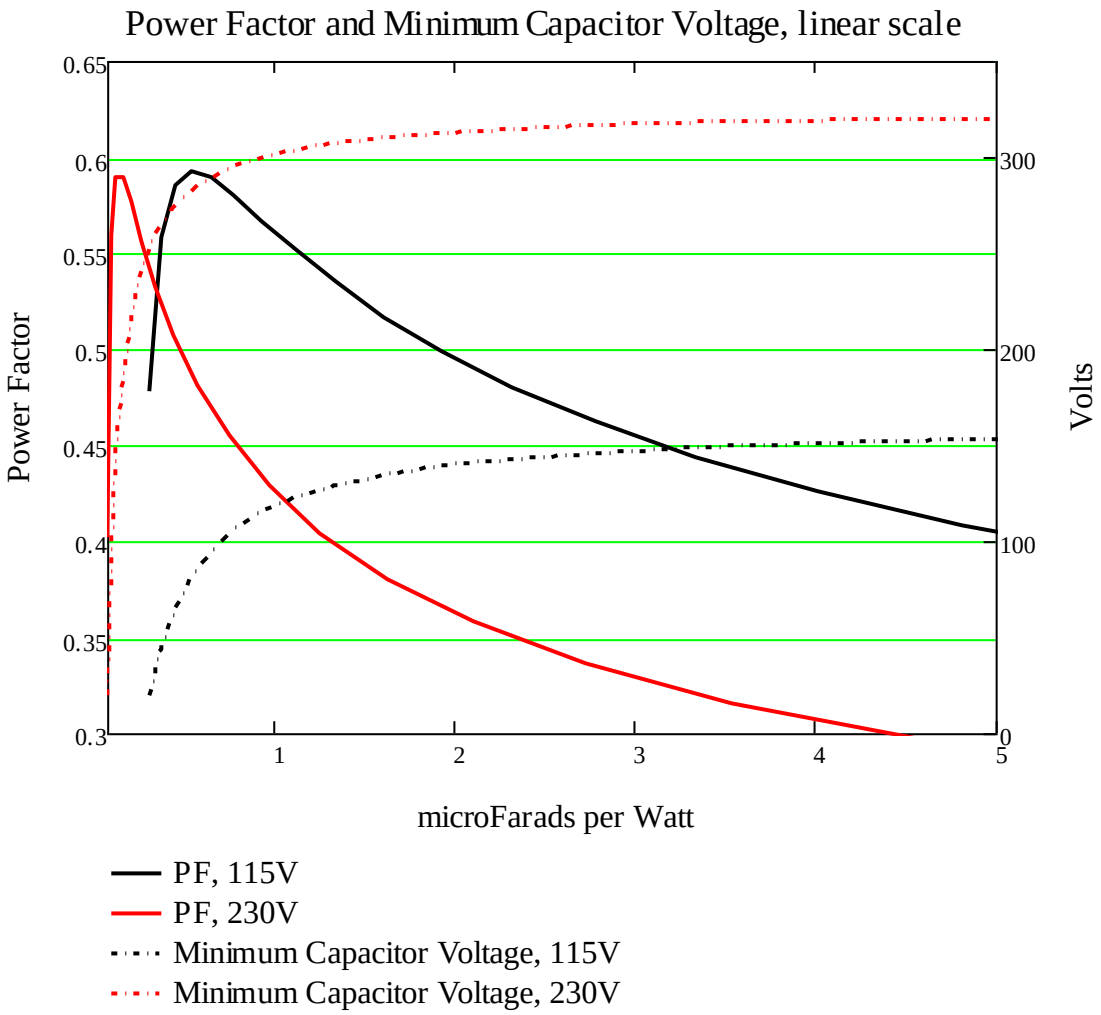

Figure 1

The above graph is drawn as shown for the purposes of direct comparison to Figure B4 in the Case report. It is redrawn below in a semilog format to make it easier to see the features of the curves at low capacitor values:

[1] Screen capture of the MathCad analysis and a copy of the MathCad program itself are attached above.

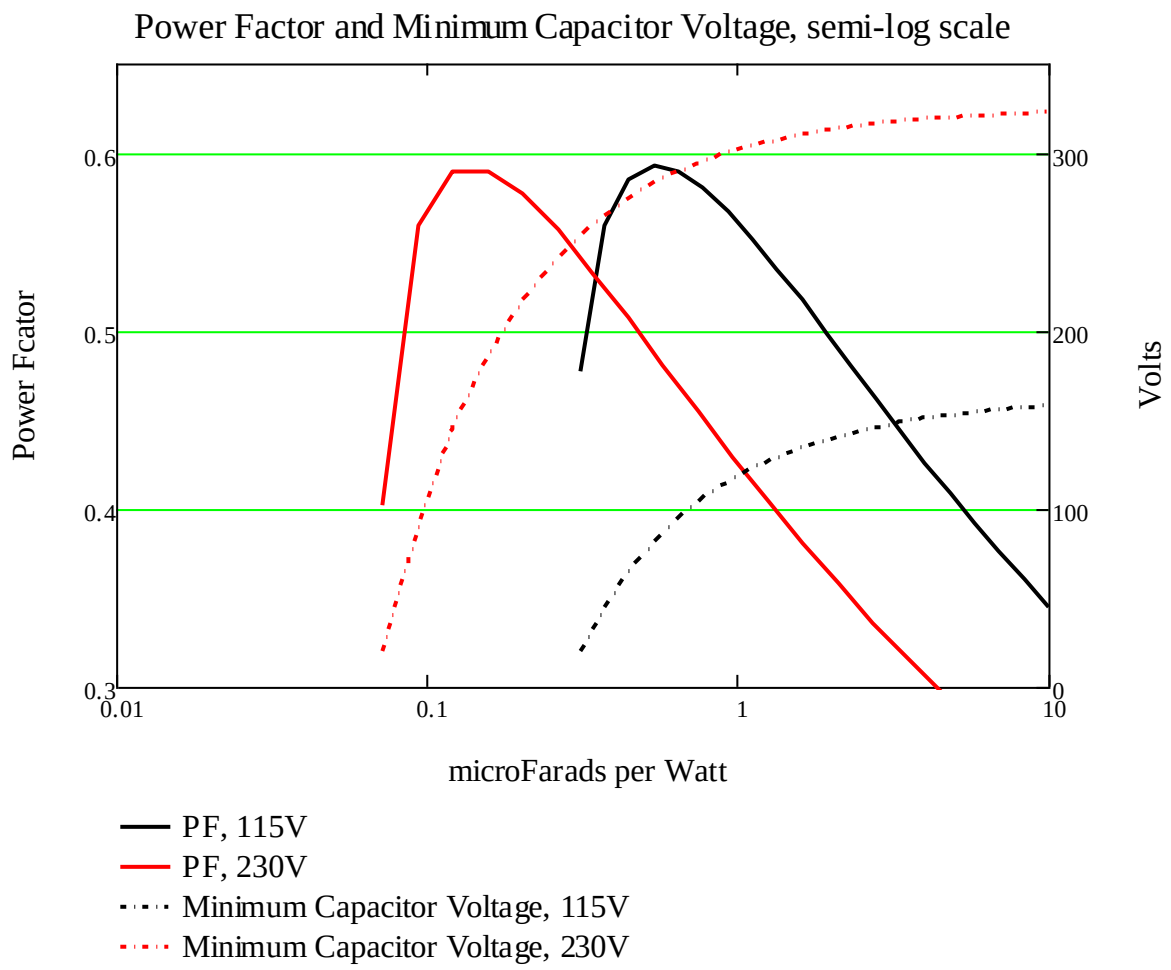

Figure 2

Note that Motorola Solutions, Inc. is unable to replicate the Figure 4B CASE report's 115V Power Factor values on the left end of the curve that go down to .3. This is because Motorola Solutions, Inc.'s calculations show that the power supply collapses (the capacitor voltage reaches the UVLO level) for a PF much below .48. Indeed, they are very close to zero at PF = .48.

It should be noted immediately that the draft Staff Report proposes a minimum PF of .6 for all power supplies, and that neither the CASE report nor Motorola's analysis shows that this is even possible with Capacitor Sizing. Based on the CEC staff presentation made on March 3, 2011, it is MSI's understanding that the CEC has re-considered this proposal and will instead propose a minimum PF of 0.55. However, even this number is not consistent with the CASE report, which recommends a PF of 0.5 for products which will be tested at both 115V and 230V in order to be sold to the international market (CASE report section 9.2).

Given that any power supply can have only one value of rectifier capacitor, the large changes in Power Factor as the supply load varies prove problematic. This is evident when the constraints of the battery charger test procedure adopted by the CEC[2] (referred to as "the Test Procedure") are

[2] Energy Efficiency Battery Charger System Test Procedure, Version 2.2, November 12, 2008.

considered for single port chargers. Matters become even worse when multi-port chargers are considered.

The Test Procedure cites two instances (among others) in which the power factor of the charger must be measured: during the “No Battery” mode, and during the first ten minutes of active charging. The proposed regulation by the CEC states that the “no battery” power mode dissipation must be less than .3 Watts. The first ten minutes of charging, on the other hand, evinces a very different situation. During that time, one of the chargers for Motorola Solutions, Inc.’s popular MC9000 series battery supplies 1 amp of continuous current into typically 7 volts. Assume that it was decided to maximize the PF in the charger for this 7 watts of dissipation. Ignoring the fact that the charger IC is not perfectly efficient, that produces a load on the rectifier capacitor of 7 Watts. The CASE report shows that at 115V, a capacitance value of about .55uF per watt would achieve a PF of .59 (the best obtainable), so let’s select a capacitance of 7 x .55uF for the power supply. A problem arises when it is realized that the ratio of 7 Watts to .3 Watts is 23.3. That means that for “no battery”, there would be 12.8uF/watt in the supply rectifier capacitor. This point is so far to the right of the power factor curve, it is not even on the Figure B4 graph. For this case, Motorola Solutions, Inc. calculates a PF of approximately .33 for a load on the supply of .3 watts when the supply is optimized for PF at a load of 7 watts.

It may appear that one option is to require a specific PF in only one part of the battery charge cycle, say, the first ten minutes, where the highest loads are likely to be found. But problems still arise when multi-port chargers are considered. Motorola Solutions, Inc. manufactures a number of chargers for different products which can charge up to 4, 6, or more batteries at a time. If the rectifier capacitor were sized to produce the best possible 115V PF for 6 batteries at .55uF/watt, then it would exhibit 3.3uF/watt when charging one battery at that same point in the charge cycle. This would yield a one-battery PF of about .44.

PF’s of .33 and .44 are clearly less than not only the draft Staff Report recommendation of .6, but also both of the two CASE report recommendations for power supplies with peak currents over 1 amp:

1. a power factor of at least .55 at 115V 60Hz;
2. a power factor of at least .50 for both 115V 60Hz and 230V 50Hz.

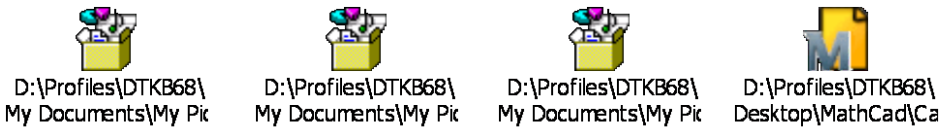

Complicating matters further are the effects of variations in the values of real world components (the capacitance of capacitors) and the fact that AC line voltages in Japan (a significant international market) reach as low as 90V. Such voltages bring the minimum capacitor voltages even lower, making it impossible for many IC’s controlling primary side switching to operate. This is discussed in more detail in the next section, where an example is given. Clearly, Capacitor Sizing is not a viable strategy for meeting any of the Power Factor performance thresholds proposed in the draft staff and CASE reports.

APFC (Active Power Factor Correction)

The second method recommended in the CASE report for meeting PF requirements is a single stage power supply which delivers charge current to a battery in 120Hz pulses. The rectifier capacitor is chosen to be “quite small”, so it delivers “negligible filtering at 120Hz”. Unfortunately, there are major problems with this approach.

First and foremost, the manufacturers of Lithium Ion batteries state that their batteries are to be charged with a constant-current / constant voltage (CCCV) protocol, as can be seen below in a sampling of specifications from major battery manufacturers Maxell, Sanyo, Samsung and Panasonic. This is well understood in the industry to mean that a battery is charged at a constant current until it reaches a specific voltage, after which time it is held at that constant voltage until charging terminates. There is no evidence at all that these manufacturers support any other kind of charging protocol. Any changes in charging would require significant requalification of these cells, not only by their own manufacturers and the designers of their chargers, but also by Underwriters' Laboratories, many of whose charging tests focus on the use of the manufacturers' specified charging protocols, which are of course CCCV.

D:\Profiles\DTKB68\ Desktop\CEC\battery D:\Profiles\DTKB68\ Desktop\CEC\battery D:\Profiles\DTKB68\ Desktop\CEC\battery D:\Profiles\DTKB68\ Desktop\CEC\battery

Secondly, suppose we assume that there were some kind of 120Hz pulse charging protocol that battery cell manufacturers would accept. Lithium Ion has CCCV as its own standard. Nickel Metal Hydride, on the other hand, employs constant current charging, with charge termination conditions based on changes in the voltage and/or temperature of the cell being charged. Clearly, some kind of presently unknown detector- controller would have to monitor these 120Hz pulses and control a device (similar to the NCP1651 mentioned in the CASE report) switching the MOSFET in Figure B1 in a manner that satisfies this presently unknown pulse charging algorithm. Coming up with such a device is the subject of a research project at best, and is hardly the basis of a means for satisfying a regulatory requirement expected to be in force within only 12-13 months.

Thirdly, Lithium Ion batteries demand protection circuits for safe performance. One of the features in industry standard protection circuits is overcharge current detection. When excessive charge current is detected, these devices will open a MOSFET switch, interrupting all charge current and protecting the battery and the user from the possibility of a dangerous situation. Unfortunately, if a single failure occurs in a 120Hz pulse charger, breaking the feedback loop and sending 120Hz pulses of uncontrolled amplitude through the battery, these pulses will return to zero about every 8 milliseconds. This periodic drop-off of current to zero resets the protection IC integrators which detect this situation and defeats the overcharge current protection function. A sampling of specifications for protection circuits from major manufacturers is provided below:

D:\Profiles\DTKB68\ Desktop\CEC\battery D:\Profiles\DTKB68\ Desktop\CEC\battery D:\Profiles\DTKB68\ My Documents\My Pic

MSI has undertaken an analysis of what modifications would be necessary to one of its external power supplies for it to meet the proposed power factor requirements." MSI has spoken with Power Integrations, one of our main suppliers of IC circuits. Regarding the CEC proposal, we have discussed the types of component and design changes that would be needed to a typical model to meet the proposed energy efficiency requirements. Power Integrations has submitted a preliminary schematic, and the following is a discussion of the various changes that would be

needed. This serves to highlight MSI's assertion that extensive product re-design will be necessary, incurring all costs described in Table 1.

We analyzed the Power Integrations Reference Design Report RDR-142 and determined that it had a Power Factor less than .55 when powered from a line voltage source of 115vac. The power converter used in this design has a control IC that switches the input (primary) inductor of the transformer for the purpose of sourcing power to a load. The transformer scales the output (secondary) inductor current to the required current peak as needed to support a load. The transformer core and wire are sized so that the transformer runs at optimal efficiency without the possibility of magnetic saturation.

A decrease in the bulk input filter capacitance causes a corresponding decrease in the minimum voltage across the input capacitor during each power line cycle. This causes the control IC to increase the current conduction time of the primary side inductor, causing a corresponding increase in primary and secondary current. This increased current over-stresses the parts used in the original design.

We used the power supply design software by Power Integrations to investigate design changes required to meet a power factor of .55. The results of this analysis were compared to the analysis performed by Power Integrations in their Reference Design Report (RDR-142). We determined from this analysis which parts needed to be changed. See the highlighted schematic below.

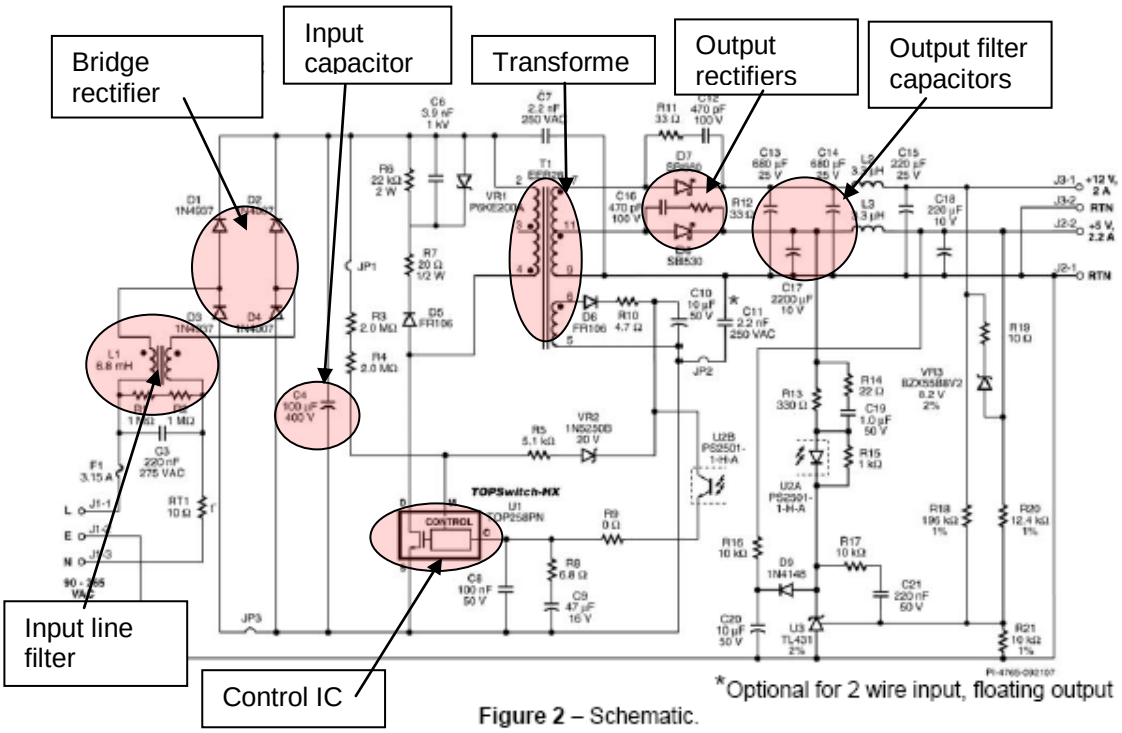

Figure 2 Schematic from the Reference Design Report (RDR-142) by Power Integrations

In the redesign analysis, the input capacitance was reduced from 100uF to try to meet the requirement of 0.55uF/Watt. Considering the input power of 44W, the resulting input capacitance is 24uF. (44Watt x 0.55uF/Watt = 24uF)

Reducing the input capacitance to 24uF causes the minimum DC bus voltage to drop well below the minimum required voltage of 70V for control IC operation when the nominal 100VAC line voltage of Japan falls to its minimum of 90VAC. The power converter needed to be redesigned. See the results below.

24.0		77	uFarads	!!! Use an input filter capacitor of at least 77 uF to maintain a minimum DC bus voltage of 70 V.

The table below contains a comparison analysis between the original power supply designed for 2.3uF/Watt and a power supply designed for 1.75uF/Watt. 1.75uF/Watt was chosen because this control IC will not continue to operate when the capacitance level falls below 1.75uF/Watt. Unfortunately, this change to the minimum possible input capacitance commensurate with controller IC operation does not meet the minimum Power Factor requirement of .55.

Table 1 Power Supply Comparison

Design per RDR-142 report			Reduced input capacitance (1.75uF/Watt)		
100	uFara	Input Filter Capacitor	77	uFarads	Input Filter Capacitor
100	Volts	Minimum DC Input Voltage	70	Volts	Minimum DC Input Voltage
0.57		Maximum Duty Cycle	0.67		Maximum Duty Cycle
1.16	Amps	Peak Primary Current	1.44	Amps	Peak Primary Current
0.44	Amps	Average Primary Current	0.63	Amps	Average Primary Current
0.60	Amps	Primary RMS Current	0.81	Amps	Primary RMS Current
0.80	Amps	Primary Ripple Current	0.99	Amps	Primary Ripple Current
1040	uHenries	Primary Inductance	679	uHenries	Primary Inductance
3.438	Amps	Output Winding RMS Current	3.783	Amps	Output Winding RMS Current
2.80	Amps	Output Capacitor RMS Ripple Current	3.21	Amps	Output Capacitor RMS Ripple Current
27	AWG	Primary Wire Gauge (	23	AWG	Primary Wire Gauge

Referencing the above results for 1.75uF/Watt, this analysis clearly demonstrates a trend of significant increase in both primary and secondary currents. From the established trend above, an input capacitance reduction to 0.55uF/Watt would necessitate significant changes to the following components:

1.) Transformer: (inductance, capacitance, wire size, core and turns ratio)
2.) Secondary rectifiers: (change to higher current low-loss parts)
3.) Secondary capacitor filters: (change to higher current low-ESR parts)
4.) Input line filter: (change common-mode filter design for higher current)
5.) Input capacitor filter: (needs to be lower ESR due to higher currents)
6.) Possible additional EMI filtering due to increased current amplitude.
7.) Controller IC (change this part)

NOTE: These changes are also necessary at 1.75uF/Watt

Additionally, all re-designs will have to be reviewed and tested for impacts on Electromagnetic Interference (EMI) and its potential interference in the communications functions of the products. Additional design changes would likely be required to increase shielding and ensure performance.

Our past experience has been that every time the transformer design is changed as required by the analysis results above, UL and other regulatory bodies require re-submission for re-certification.

The CASE and draft Staff Reports list ten “advanced” techniques and two techniques for power factor for meeting proposed energy efficiency requirements in battery chargers. Motorola Solutions, Inc. has pointed out serious deficiencies in either the techniques, the performance thresholds recommended by the draft staff and CASE reports, or both. Manufacturers are left with no means mentioned in the CASE or draft Staff Reports which are capable of meeting the proposed performance thresholds. More extensive and complex design changes would be needed, which would most certainly trigger product re-certification requirements as described above in section I, incurring all costs described in Table 1. MSI respectfully requests that the CEC acknowledge that power factor requirements are not appropriate for small non-consumer Battery Charging Systems.

3.0 Battery chemistries

In the response to comment 15, the CEC draft Staff Report states “It is feasible to meet the proposed regulations with any battery chemistry.” While this is technically true, it is misleading to imply that the burden of compliance is the same across the various battery chemistry types, due to the inherent differences in efficiency that are exhibited during charge. Nickel batteries naturally have higher loss during recharge. Note the figures below 2 and 3 which show the difference in charging efficiency between a typical NiCd battery used by MSI and a typical Lithium Ion battery used by MSI.

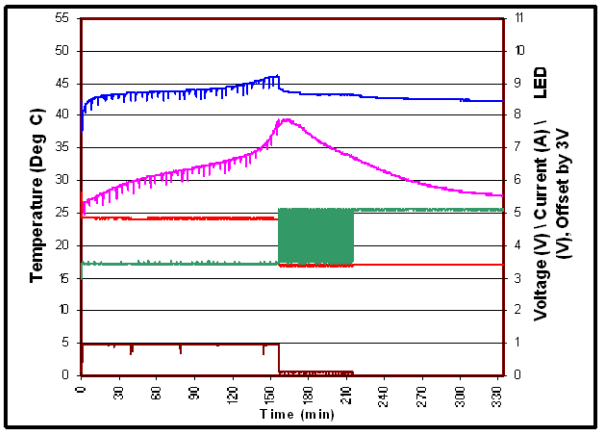

Amount of energy sourced into pack during charge cycle 2634mAh

Discharge: 2214mAh

Efficiency: 84.1%

Figure 2 Efficiency of NiCd battery charge cycle

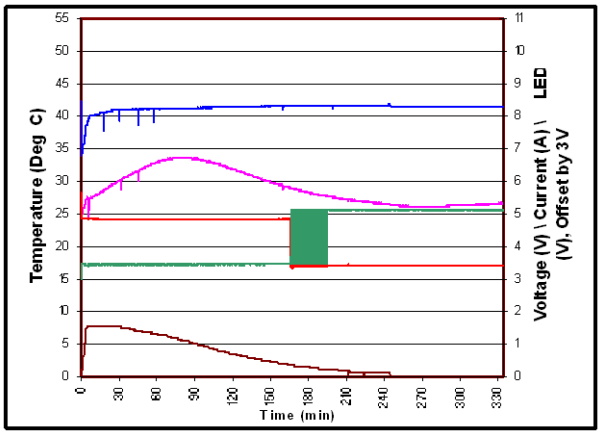

Amount of energy sourced into pack during charge cycle 3084mAh

Discharge: 3073mAh

Efficiency: 99.6%

Figure 3 Efficiency of Lithium Ion battery charge cycle

Not accounting for this fundamental difference in the efficiency requirements places significant additional burden on the charging solution for Nickel chemistry batteries. By not acknowledging the fundamental difference in chemistries, the CEC proposal instead of being neutral, is far more restrictive of nickel batteries. This will require these types of chargers to undergo more extensive design changes which will result in much higher costs and cycle times to get compliant designs to the market. This would mean increased selling prices to mission critical customers, and could result in product unavailability or shortages. It would be far more appropriate to differentiate the proposed energy efficiency requirements based on battery chemistry, or alternatively to raise the proposed limits for each mode across the board.

Another assumption made in both the CASE report and the draft Staff Report is that rapid charging is inherently less efficient than slow charging (see page 15, one of the "methods that can lead to higher efficiency in battery chargers" is listed as "lower current rate for charge and discharge cycles"). It is clear that the proposed limits on energy consumption in the various modes were developed with this assumption in mind. However, this is simply not true for all battery chemistries. In figure 4 below, which is taken from the battery cell manufacturer Sanyo's website, a charge efficiency graph for a typical NiCd battery is shown. As described in the Sanyo documentation, the graph shows that "…the charge efficiency as well as the output capacity is lower at a lower charge rate."

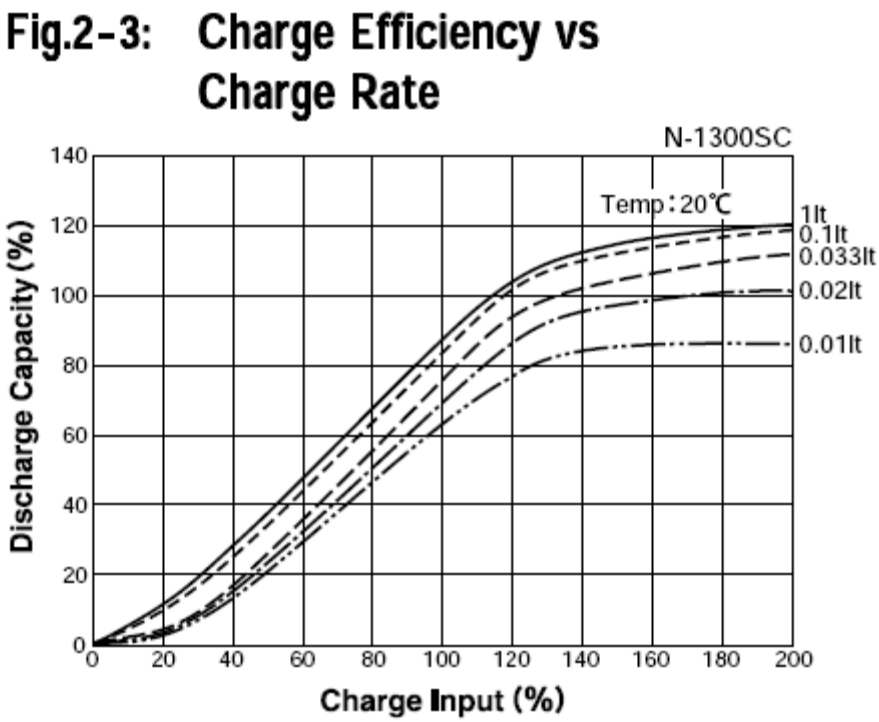

Figure 4

For NiMH batteries, charging at a low rate would be contrary to the manufacturer recommendations and would actually be detrimental to the product in that the battery life would be shortened. Again, documentation from the battery cell manufacturer Sanyo states: "Overcharging shortens the service life of the Twicell*, and for this reason, low-rate charging is fundamentally not suitable."

*brand name of NiMH battery pack

4.0 External Power Supplies will be regulated by two different standards
During Motorola Solutions, Inc.'s meeting with the CEC staff, and again in our letter to same dated January 31, 2011, it was noted that the proposed limits on energy consumption are not harmonized with the current CEC regulation for energy efficiency of External Power Supplies. External Power Supplies meeting the current California appliance efficiency requirements are allowed a no-load power of 0.5W. During the meeting staff replied that this is a "known issue."

Subsequently, in the response to comment number 2 in Appendix C of the draft Staff Report, it was stated that, "Battery charger power supplies are currently exempt from the Energy Commission and federal EPS standards and therefore will not be regulated as both an EPS and a battery charger." This assertion is repeated in the responses to questions 19 and 20. However, under the definition of State regulated External Power Supplies on page 59 of the 2010 Appliance Efficiency Regulations, it can be seen that State-regulated external power supplies for battery chargers are exempted from regulation only if:

- batteries or battery packs physically attach directly (including those that are removable) to the power supply unit, or;
- the unit has a battery chemistry or type selector switch

Most external power supplies for our products do not meet this definition and therefore are not actually exempt from existing regulation. This means the EPS would be regulated under both standards, To re-regulate a product which is already regulated is confusing, inefficient, and wasteful. To make matters worse, the two regulations are not harmonized. An EPS which meets

the energy efficiency requirements of the EPS standard would cause a Battery Charging System to fail the performance requirements of the proposed BCS regulation, as a compliant EPS can consume 0.5 W in “no-load” mode, while the EPS would be allowed only 0.3 W. In order just to meet the requirements, the EPS would have to exceed the current requirements and demonstrate it meets “Level V” energy efficiency requirements, which allows only 0.3 W in “no-load” mode.

5.0 The proposed limits on power consumption in maintenance and no-battery mode are too low

The proposed limits for power consumption in maintenance mode and no-battery mode consider only the energy needed to charge the battery, and do not account for any functions beyond that which are performed by advanced non-consumer BCS. Most of these functions are integrated into the system in such a way that they cannot be turned off by the user, and so would remain on during tests conducted per the CEC test method. These additional functions in maintenance mode include:

a) indicators (LEDs, displays, etc.)
b) fan for multi-port chargers (typically always on);
c) communications between the charger and the batteries;
d) communications between the charger and other equipment whose purpose is to capture and aggregate information about the batteries;

These functions are not related to battery capacity.

A similar issue exists in “no battery mode.” In this mode, the power consumption of the External Power Supply itself becomes problematic, as a compliant EPS can consume up to 0.5 W when the allowable level for the BCS is 0.3 W. Assuming a Level V EPS is used instead, it will consume 0.3W in “no battery mode” all by itself. Therefore, a power supply would actually have to EXCEED Level V requirements to allow for the energy consumed in no battery mode by any additional function such as LED indicator lights, cooling fans, and communications. The draft Staff Report states that because Level V EPS are supposedly ubiquitous, there are EPS which are more efficient than Level V (see response to comment 20). This statement is not logical and is not substantiated by any data. Motorola Solutions, Inc.’s internal procurement organization is aware of many suppliers meeting Level V requirements, but they are not aware of any suppliers providing power supplies of the size needed for industrial products which exceed Level V energy efficiency. Based on rising copper costs and rising labor costs in China (where the majority of these components are made), EPS suppliers are not making changes to product design which will have further price impact. In order to develop EPS to meet efficiency levels beyond Level V, 24 months of lead time at a minimum would be needed, not the 12 or 13 months in the current proposal. Furthermore, switching to a new power supply will trigger re-certification requirements/costs for the entire Battery Charging System, which would most certainly trigger product re-certification requirements as described above in section I, incurring all costs described in Table 1.

Motorola Solutions, Inc. asks that the allowable levels for small non-consumer BCS be raised to account for the functions performed by these complex products beyond simple battery charging. MSI would appreciate the opportunity to provide data on the current levels of power consumption for these products under the auspices of a standard Non-Disclosure Agreement in order to inform the process of selecting appropriate levels. If levels are not raised, significant re-design costs will be incurred (see Table I). I addition, given the extensive impact of such restrictive levels across our product portfolio, re-design efforts will take an extensive period of time and will likely result in significant portions of the product portfolio being unavailable in California.

6.0 Timeline is too short

Beyond the unrealistic and unattainable requirements already discussed, and the negative cost-benefit analysis, the proposed timeline for implementing what would be a massive re-design of

Motorola Solutions complete product line is simply too short. Allowing only 12-13 months from date of publication to effective date does not allow sufficient time for products to be re-designed, validated/tested, and certified by CB's. Products which MSI intends to place on the market in mid-2012 are already in the late development stage, without time for major re-design. Even the CASE report recognizes this fundamental cycle time requirement in section 8.1, stating that manufacturers should be allowed "…approximately two years to source components and adjust designs." Additionally, when the EPS standard was put into place, manufacturers were allowed 18 months to comply with Tier I (for our products) and 30 months to comply with Tier II requirements. Given that the very same EPS will be regulated under this proposal, and that there is no data to demonstrate that ample Level V EPS exist in the marketplace so the same product re-design efforts will have to take place, the current proposal is inconsistent with previous standards. Furthermore, it is essential to note that all models of our chargers could not conceivably be redesigned at the same time. Each redesign effort would take at least 24 months, and a limited number of models can be re-designed at one time, based on constrained resources such as staff. Without knowing the full extent of the impact, it is impossible to comment more specifically on how much time would be needed for implementation, but certainly the current proposal is not feasible for small, non-consumer products and would result in products being made unavailable for the California market for some extended period of time.

7.0 Draft Staff Report responses regarding the test method

The CEC draft Staff Report response to comment #21 regarding multi-port chargers states that "The charger does not need to be tested with all bays occupied. Only one bay needs to be tested, and therefore the energy use of the additional bays should not significantly impact the ability of products to meet the proposed standards." However, the required test method states that the BCS must be tested with all ports occupied (see Table C which states, "Use all ports and use the maximum number of identical batteries of the highest rated charge capacity that the charger can accommodate").

In addition, the CEC response to comment #20 regarding LED indicators states that the LED function "...can be turned off or disconnected during testing." However, the specified test method clearly states that "Any optional functions controlled by the user and not associated with the battery charging process (i.e., a radio integrated into a cordless tool charger) shall be switched off. If it is not possible to switch such functions off, they shall be set to their lowest power-consuming mode during the test." (Part1, section II(D)). The LED indicator is NOT controlled by the user and therefore per the test method, it cannot be turned off during the test. This contradiction between the draft Staff Report statements and the test method requirements must be clarified. In addition, Motorola Solutions, Inc. would like to re-iterate that questions regarding the test method that we posed in letters to the CEC in May 2008 and again in October 2010 have not yet been answered. We respectfully ask the CEC to once again review these questions (see October letter http://www.energy.ca.gov/appliances/battery_chargers/documents/2010-10-11_workshop/comments/Motorola_comments.pdf) and provide responses.

In summary, Motorola Solutions, Inc. appreciates the opportunity to submit comments on the current draft Staff report. We believe the current proposal is technically infeasible and would result in net costs to the California consumer along with product shortages for our customers, including mission critical customers (e.g. police and fire agencies). We feel we have clearly demonstrated the negative impact of the proposed regulation in its current form, and our current recommendation would be that the proposed regulation does not move forward for this reason. We would be happy to continue a dialogue with the CEC staff, and look forward to the opportunity to continue to collaborate on the important topic of energy efficiency of Battery Charging Systems.

Sincerely,

Don G. Bartell
Motorola Solutions, Inc.
Senior Director, Corporate Sustainability

Appendix A Copy of Jan. 31 letter submitted to California Energy Commission by Motorola Solutions, Inc.

January 31, 2011

Commissioner Jeffrey Byron
California Energy Commission
1516 Ninth Street
Sacramento, CA 95814

Subject: Appliance Efficiency Standards for Battery Chargers (Docket # 09-AAER-2)

Dear Commissioner Byron:

Thank you for taking the time to meet with us on January 20th. We appreciated the opportunity to provide input on the important topic of energy efficiency as it relates to our products using Battery Charging Systems. In support of your goals related to saving energy in California, we would like to take this opportunity to further highlight our concerns with the PG&E CASE report that has been put forth, as well as offer some suggestions for moving forward in this area.

A thorough cost-benefit analysis is critical to the success of any energy efficiency regulation

As mentioned during our meeting on January 20th, there is a need for thorough cost-benefit analysis to be performed before any decisions can be reached on energy efficiency regulations for these products. Aspects of such a study, including a study of user behavior, Best Available Technology, the costs for potential improvements as well as an accurate estimate of potential energy savings are all critical to an accurate cost-benefit analysis. To date, this has not been undertaken for these non-consumer Battery Charging Systems. The brief economic analysis that was presented in the PG&E CASE report shows that there is minimal potential economic benefit to be realized from a regulation on the "small non-consumer" product category. Per this report, the potential cost savings on an annual basis as a result of reduced energy consumption for the product categories covering Motorola Solutions products would be $786,000. This number is actually greatly inflated, as their estimated number of battery-powered barcode scanners in California is approximately 10 times higher than industry figures indicate. Meanwhile, product costs will increase 15%-25% in order to meet new energy efficiency requirements. This will result in an annual cost increase to the California consumers of these products of $5,300,000 (based on both industry and internal sales data). It is clear that the net result of such a proposal is a large increase in cost to the citizens of the state, not a savings. As you must realize, this would be in direct conflict with the requirements of Warren-Alquist Act, which states CEC appliance efficiency standards shall not result in any additional cost to the consumer.

This is in sharp contrast to the situation for "large non-consumer products," as defined in the CASE report, which consume the largest percentage of energy in the BCS category (48% by three-phase lift trucks alone) and have the highest potential for cost savings. A thorough cost-benefit analysis for this product category may reveal that there is a much more compelling case for regulation of these products.

Definitions for Battery Charging Systems need to be refined

As we discussed at length during our meeting, the Battery Charging Systems for small non-consumer products such as industrial handheld computers/barcode scanners and two-way radios are complex. They have many more functions than simple battery charging and cannot be viewed in the same way as simpler consumer products. Functions which are essential to the

product such as battery re-conditioning, battery fuel-gauge calibration, data communication, internal cooling with fans, maintenance charging (aka trickle charging), etc. all consume energy and are not accounted for in the current CEC test method. Motorola Solutions, Inc. feels that the product category of "small non-consumer" is simply too broad to appropriately classify all the products in this range. We propose splitting this category into two sub-categories in order to recognize fundamental differences in product function and technology:

Simple Battery Charging System - No function beyond battery charging except for simple battery charge status indications only: "charging" state vs "charge complete" (e.g. LED)
Advanced Battery Charging System – Includes functions beyond battery charging and battery charge status indication

This approach has multiple benefits. First, it allows for possible regulation of small (non-motive) non-consumer "simple" battery charging systems using the current test method. It would also allow California the flexibility to harmonize with jurisdictions such as the EU, which provide allowances in energy efficiency regulations for LED status indicators (e.g. 1275/2008/EC on Standby Power, which allows an additional 1.0 watts of standby power consumption for indicator/status displays on covered products). This approach would also allow for exclusion of "advanced battery charging systems" from regulation until such a time as an appropriate test method can be developed, or in the event that advanced systems were dropped from the scope of the regulation due to lack of cost-benefit justification.

There are technical issues with the current test method
As we stated in written comments during the development of the test method itself (May 27, 2008), as well as in our comments to the CEC regarding the PG&E CASE Report (November 4, 2010), the current test method does not appropriately deal with the issue of Discharge Threshold.

We understand the test procedure is intended to simulate the most accurate charging scenarios for individual Battery Charging Systems and allow individual products to be tested in real world conditions. However, with regard to Battery Discharge Threshold, we believe the current test method falls short of that goal. For example, most battery-operated devices will not allow the battery to be fully discharged and will force a shut down of the device to prevent a full discharge of the battery. Battery Charging Systems are optimized to operate with a specific discharge threshold based on the chemistry of the cell, the cell manufacturer's requirements, and the design of the device itself. We believe that any attempt to set an artificial threshold value could impede technology and could in fact constrain designers and manufacturers in such a way that it would not be beneficial to the overall goal of saving energy. New chemistries/formulations of battery cells (and as a result the electronics they power) are likely operate in voltage ranges that exceed the present range (both higher and lower voltages) and have usable capacity beyond the ranges afforded by present technologies and/or widely-used battery chemistries. Additionally, higher charge and discharge rates are likely to push the envelope of today's power supply technologies, and widely-available, low-cost, mass-produced components for both energy conversion and protection devices are likely to lag the battery cell market.

Another issue with the current test method lies in the method outlined for battery selection. In Part II, Table 3, the technician is instructed in row 5 to select the batteries with the "lowest voltage" or the "highest voltage" for testing. However, no definitions are given for these terms, and multiple interpretations are possible based on battery "voltage":

- Rated Battery Voltage
- Desired - End-of-Discharge Battery Voltage
- Midpoint voltage during 0.2C discharge
- Average voltage during 0.2C discharge
- Battery Discharge - starting battery voltage
- Battery Discharge - Ending battery voltage

It is critical that CEC clarify the definitions for “lowest voltage” and “highest voltage” in the test procedure in order to allow accurate and repeatable testing.

We would also like to highlight that the current test method does not account for differences in battery chemistries that currently exist in the market for industrial products. In order to properly test systems with a method that allows for accurate comparison between chemistries, it would be most appropriate to exclude the battery charge efficiency itself from the overall system efficiency calculation. This allows the focus to be on the efficiency of the energy charge conversion process, where it belongs, not on the battery or the EPS.

Legacy products should not be covered by any proposed regulation

As we discussed during our meeting, our industrial products have a production lifespan of 10 years or more. Once deployed, many of these products can have a lifespan in the field of 15 additional years, and service parts should be available for the life of the product. To avoid the unintentional side effect of “orphaning” the handheld computers/scanners/radios in a user’s system and creating significant e-waste from perfectly-functional product, products which are replacement units for existing systems and products which allow capacity expansion for existing systems should not be covered in the scope of any proposed regulation. This is similar to the WEEE/ROHS legislation in the EU which does not cover such products either.

In the EU “FAQ” document regarding WEEE/ROHS applicability, the answer to question 1.12 states:
the Directive does not apply to spare parts for the repair, or reuse, of electrical and electronic equipment put on the market before 1 July 2006 (Article 2(3)). This is to allow old equipment to be maintained with spare parts and to ensure that old electrical and electronic equipment is reused.

And also the answer to question 1.13 states:
The use of non-RoHS compliant material in electrical and electronic equipment (EEE) products put on the market before 1 July 2006 for the purposes of capacity expansion and/or upgrade is allowed in principle provided that the EEE is not put on the market as a new product.

We encourage the CEC to take this total life-cycle approach as well, and consider the overall environmental impact of any proposed regulation.

Furthermore, California law itself requires that manufacturers provide spare parts for at least seven years for electronic and appliance products (California Civil Law 1793.03):

(a) Every manufacturer making an express warranty with respect to an electronic or appliance product described in subdivision (h), (i), (j), or (k) of Section 9801 of the Business and Professions Code, with a wholesale price to the retailer of not less than fifty dollars ($50) and not more than ninety-nine dollars and ninety-nine cents ($99.99), shall make available to service and repair facilities sufficient service literature and functional parts
to effect the repair of a product for at least three years after the date a product model or type was manufactured, regardless of whether the three-year period exceeds the warranty period for the product.

(b) Every manufacturer making an express warranty with respect to an electronic or appliance product described in subdivision (h), (i), (j), or (k) of Section 9801 of the Business and Professions Code, with a wholesale price to the retailer of one hundred dollars ($100) or more, shall make available to service and repair facilities sufficient service literature and functional parts to effect the repair of a product for at least seven years after the date a product model or type was manufactured, regardless of whether the seven-year period exceeds the warranty period for the product

Many certifications are needed for non-consumer products
To further highlight the complexity of our products, as requested we have included additional information on the various certifications we must obtain for our products before they can be sold into commerce (please see Appendix A, Table 1 and table 2)). By and large, our products are sold globally; we do not design products specifically for the United States or for California. Therefore, each product we sell must be certified to all standards applicable by product type.

The cost of performing these certifications for a new charger design ranges between $25,000 and $100,000 per model. It was quite apparent that these costs were not taken into account in the PG&E CASE report, but they have a significant impact on the end-user particularly for lower-volume products such as these. Motorola Solutions, Inc. has well over 70 unique charger designs for our industrial products, and the costs to re-certify all of these, as well as associated engineering and manufacturing costs, will lead to a 15% to 25% increase in the final product cost to the consumer.

Harmonization with other CEC regulations on EPS
During the meeting, it was noted that the proposed limits on energy consumption are not harmonized with the current CEC regulation for energy efficiency of External Power Supplies. External Power Supplies meeting the current California appliance efficiency requirements are allowed a no-load power of 0.5W. Any proposed regulation of Battery Charging Systems must take this into account. Again, we feel that it is most appropriate to put the focus of additional regulation on the efficiency of the battery charging circuit itself, and not “double-regulate” the EPS component of the system.

Motorola Solutions, Inc. understands the complexity of regulating small industrial/non-consumer Battery Charging Systems, and appreciates the opportunity to provide this input to the California Energy Commission. Where opportunities exist to improve the energy efficiency of these products in a sustainable way, we are eager to leverage them for competitive advantage. As a company, we have a strong legacy of continually improving the environmental performance of our product portfolio and we take pride in our accomplishments. We look forward to continuing a dialogue on the important topic of energy efficiency for Battery Charging Systems.

Sincerely,

Don Bartell
Motorola Solutions, Inc.
Senior Director, Corporate Sustainability

Appendix A

Table 1: Certification Requirements for Industrial Handheld Computers/Barcode Scanners Battery Charging Systems

Document Number	Document Description
IEC60950-1	US IEC 60950-1 (Electrical Safety)
IEEE 1725	Safety Standards, US
CFR 47 Part 15 (FCC Class B)	EMC Standard, US
21CFR1040.10	FDA (EMC for devices used in medical settings and laser safety for bar code scanners)
AS/NZS CISPR 22:2006	EMC Standard Australia
ICES-003 (Class B)	EMC Standard Canada
CSA C22.2 No. 60950-1	Safety Standard, Canada
GB9254-1998	Standard China EMC
GB17625.1-2003	Standard China Harmonics
GB4943-2001	Standard China Electrical Safety
EN 55022	EU EN 55022 Class B (Emissions)
EN 55024:1998 + A1:2001+A2:2003	EU EN 55024 (Immunity)
EN 61000-3-2:2000 + A2:2005 (Class A)	EU EN 61000-3-2 (Harmonics)
EN 61000-3-3:1995 + A1:2001+A2:2005	EU EN 61000-3-3 (Flicker)
EN 60950-1:2001+A11	EU Safety Standard
J55022(H14)	EMC Standard, Japan
GOST R 51318.22-99	EMC Standard, Russia
GOST R 51317.3.2-99	EMC Standard, Russia
GOST R 51317.3.3-99	EMC Standard, Russia
GOST R MZK 60950-2002	Safety Standard, Russia
ICES-003	Spectrum Management and Telecommunications Policy, Interference Causing Equipment Standard, Digital Apparatus Class B
CISPR 22	EMC Standard, South Korea

Table 2: Certification Requirements for Radio Products Battery Charging Systems

Document Number	Document Description
47 CFR 15	FCC Part 15 Class B
73/23/EEC	Low Voltage Directive (73/23/EEC)
89/336/EC	EMC Directive (89/336/EC)
93/68/EEC	Marking Directive (93/68/EEC)
AS/NZS 60950	Information Technology Equipment – Safety General
CAN/CSA C22.2 No. 60950-1	Power Supplies w/ Extra Low Voltage Class 2 Output
CISPR 22	Information Technology Equipment – Radio Disturbance (Emissions)
CISPR 24	CISPR 24
EN 55022	EN 55022 Class B (Emissions)
EN 55024	EN 55024 (Immunity)
EN 60950-1	EN 60950-1 (Electrical Safety)
EN 61000-3-2	EN 61000-3-2 (Harmonics)
EN 61000-3-3	EN 61000-3-3 (Flicker)
EN 61000-4-3	EN 61000-4-3 (RFI)
GB 17625.1	Standard China Harmonics
GB 4943	Standard China Electrical Safety
GB 9254	Standard China EMC
ICES-003	Spectrum Management and Telecommunications Policy, Interference Causing Equipment Standard, Digital Apparatus Class B
IEC60950-1	IEC 60950-1 (Electrical Safety)
IEC60320	Appliance and Interconnection Couplers
IEC60950-1	International Standard for Safety of Information Technology Equipment- IEC60950-1
IEC61000-3-2	Limits for Harmonic Current Emissions (Input <= 16A)
IEC61000-3-3	Limitations of Voltage Fluctuations and Flicker in Low Voltage Supply Systems
IEC61000-4-11	IEC 61000-4-11 (VDI)
IEC61000-4-2	IEC 61000-4-2 (ESD)
IEC61000-4-3	Radiated, Radio Frequency, Electromagnetic Field
IEC61000-4-4	IEC 61000-4-4 (EFT)
IEC61000-4-5	IEC 61000-4-5 (SURGEI)
IEC61000-4-6	IEC 61000-4-6 (CFI)
MIL-STD 810F	Controlled, Restricted and Reportable Materials Disclosure
TIA-603	Telecommunication Industry Association
UL 1310	UL 1310 (Electrical Safety)
UL 60950-1	UL 60950-1 (Electrical Safety)