APPLIANCE EFFICIENCY REGULATIONS

Staff Workshop

Battery Chargers and Lighting Controls

March 3, 2011

Michael Leaon, Manager
Appliances and Process Energy Office
California Energy Commission

Agenda Review

- CEC Background Presentation
- Lighting Controls
- CPUC Role in Energy Efficiency
- Staff Report: Findings and Standards
- Ecos Discussion of Technical Issues
- Open Discussion
- Adjourn

Battery Chargers and Lighting Controls Staff Workshop

BACKGROUND AND HISTORY

California Energy Commission
www.energy.ca.gov

Background and History

- Background:
  - Statutory Authority
  - State Policy
  - Appliance Program Results
- History:
  - Battery Charger Test Proceeding
  - Battery Charger Systems Proceeding

Warren-Alquist Act

- Legislative Findings**:**
  - Ensure reliable supply of electricity
  - Address concerns over wasteful, inefficient appliances
- Establishes Authority for the Energy Commission to:
  - Set specific minimum energy efficiency or maximum energy usage levels;
  - Specify testing, marking, and labeling requirements;
  - Collect and verify data
- Requires that efficiency standards be:
  - For appliances that have a significant statewide energy use;
  - Feasible and attainable;
  - Cost effective

Energy Commission Policy

- Loading Order
  - Energy Efficiency is the highest priority
- Renewables Portfolio Standard - RPS
  - 33% renewables by 2020
  - About 100,000 GWh/year
- IEPR Goals
  - 2009 IEPR – Continue to adopt appliance standards
  - 2007 IEPR – Achieve100% of cost-effective energy efficiency savings

Other State Policy

- Climate Change/ARB Scoping Plan
  - Reduce GHG Emissions to 1990 levels by 2020
  - Energy Efficiency Measure (32,000 GWh of Reduced Demand)
- Energy Action Plan
  - Zero Net Energy Buildings
    - new residential construction by 2020
    - commercial construction by 2030
  - Managing plug loads a key component of meeting these goals

History of BCS Standards Development

- AB 970 (Statutes 2001) called for Commission to implement all cost effective energy efficiency standards.
- In 2003 CEC identified battery chargers and external power supplies as having large savings potential.
- In 2004 CEC initiated a rulemaking for external power supplies, but found test procedure to be inadequate for BCS.

History of BCS standards Development

- 2005 developed BCS test procedure
- 2007 Draft BCS test procedure released
- 2008 CEC rulemaking adopts BCS test procedure
  - Request for test data sent to manufacturers
- 2009 Ecos develops CASE Report on behalf of statewide IOUs

Process for Pre-Rulemaking Phase

- August 2010 - Efficiency Committee directs staff to start pre-rulemaking phase
- October 2010 - staff holds workshop to take comment on IOU CASE Report
  - Requested alternative data for critical input assumptions
- January 2010 - Staff completes review of CASE Report and source materials, stakeholder comments and DOE technical data
  - Develops staff report based on analysis of this data
  - Request alternative data from industry
- February 2010 - staff report released in preparation for this workshop

Battery Chargers and Lighting Controls: Staff Workshop

ENERGY SAVINGS POTENTIAL FROM BATTERY CHARGERS

California Energy Commission
www.energy.ca.gov

Basis for Developing CA Battery Charger Standard

- Significant statewide consumption
  - 8,000 GWh/yr
  - Most of the energy does not reach battery
- Battery Chargers is a growing load
  - 2015-charger saturation per capita estimated to be 136 percent of 2009 levels

Battery Charger Energy Usage

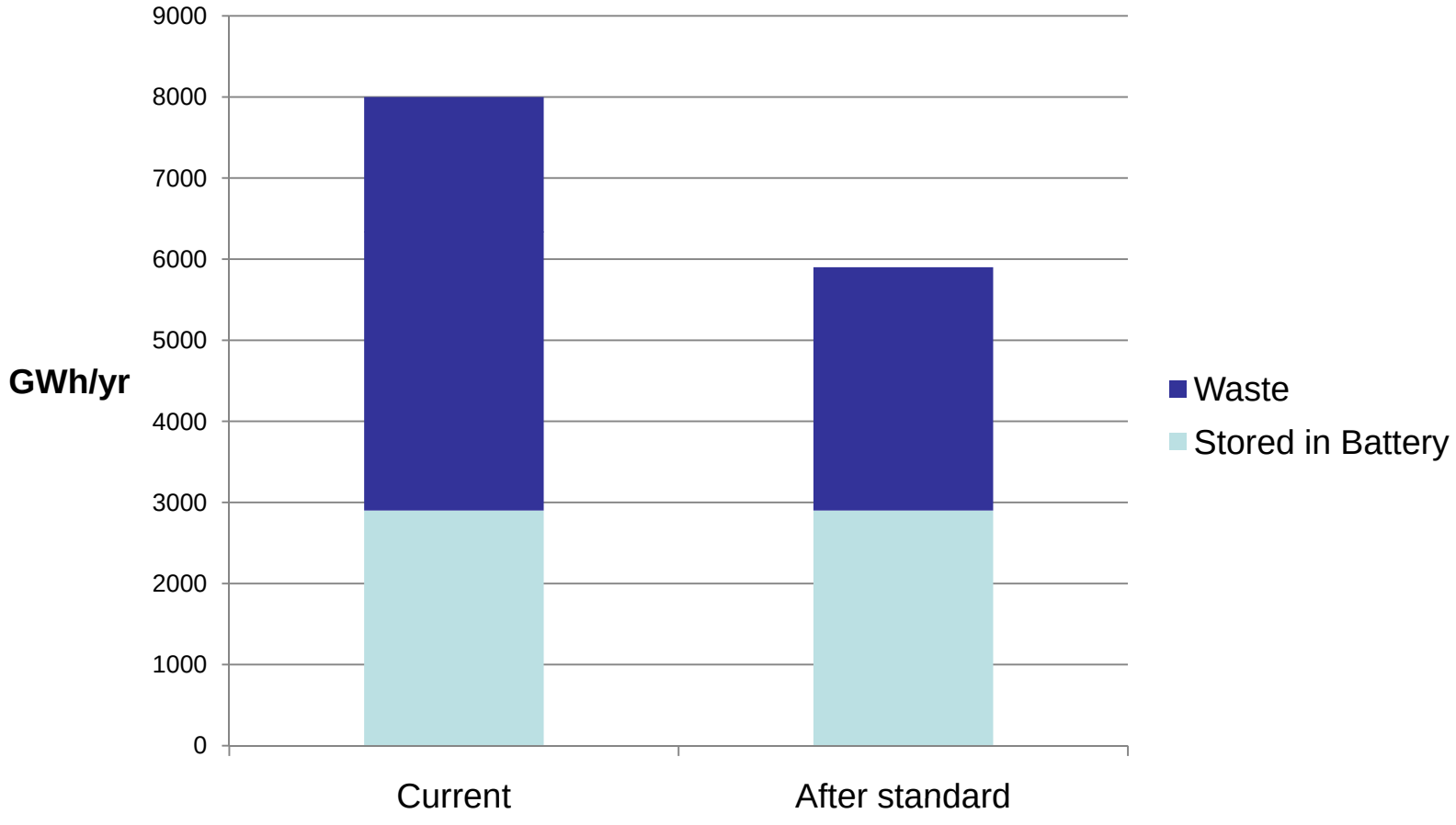

Basis for Developing CA Battery Charger Standard

- Significant cost effective energy savings potential
  - 2,100 GWh/yr
  - Represents second largest potential relative to other devices

Large Potential Energy Savings Compared to Other Devices

Device (Source: IOUs)	Savings after Stock Turnover (GWh)
Computers and Servers	2,900
Battery Chargers	2,100 (CEC staff report)
Linear fluorescent fixtures	1,070
Lighting Accessories	580
Plug-in Luminous Signs	520
Outdoor Lighting	510
Neon signs power supplies	270
Refrigeration Condensing Units	200

Compliance Strategy

- Standards target battery charging circuitry
  - Does not mandate battery chemistry
  - Does not mandate end use product redesign

Compliance Strategy

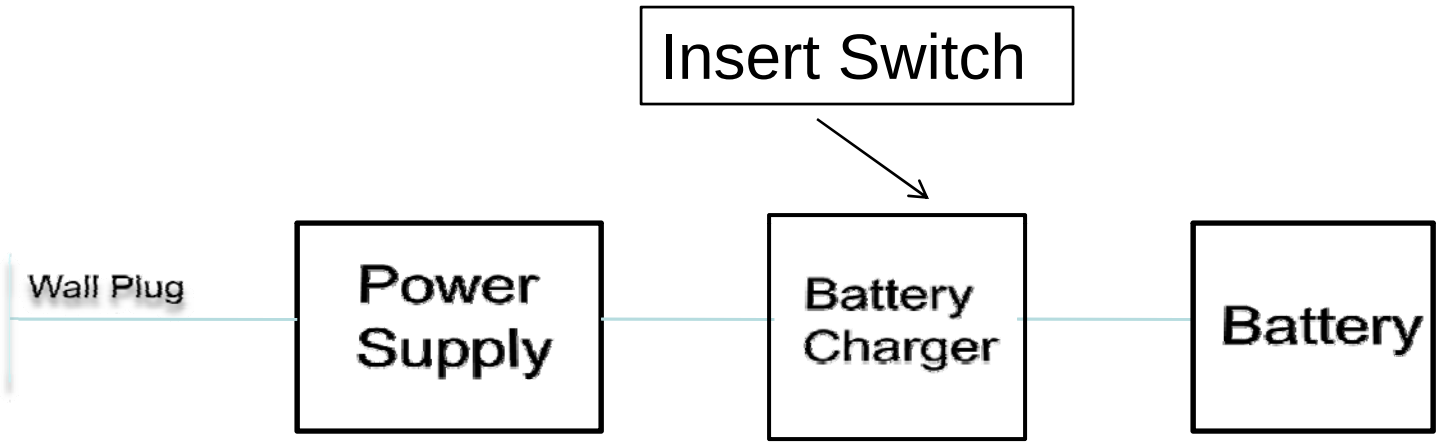

Benefits of California Standard

- Energy Savings:
  - 2,100 GWh/yr after full stock turnover
    - Savings with 2013 DOE preemption 720 GWh/yr
- Cost Savings
  - First year savings to ratepayers $50 million
  - Savings will increase over time

Summary

- Growing problem
- Significant potential energy savings
- Easy Fix
- Benefits to California

Battery Chargers and Lighting Controls: Staff Workshop

SCHEDULE AND NEXT STEPS

California Energy Commission
www.energy.ca.gov

Rulemaking Schedule

- Submit written comments by March 15, 2011
- Revise staff report and proposed standards as necessary based on workshop comments
- Ask for Efficiency Committee direction on whether to begin formal rulemaking
  - Next step would be to Notice the proposed permanent regulations for a 45 day review period

Written Comments

- Submit comments both electronically and in writing by March 15, 2011
  - Email comments to docket@energy.state.ca.us
  - Include docket number 09-AAER-2 in the subject line of comments
  - Mail hard copy to:

California Energy Commission

Dockets Office, MS-4

Re: Docket No. 09-AAER-2

1516 Ninth Street

Sacramento, CA 95814-5512