May 31, 2011

2010 Rulemaking Proceeding Phase II on Appliance Efficiency Regulations

California Energy Commission
Dockets Office, MS-4
Re: Docket No. 09-AAER-2
1516 Ninth Street
Sacramento, CA 95814-5512

ATTN: Mr. Ken Rider
krider@energy.state.ca.us

Comment of APC by Schneider Electric

Jay L. Taylor
Director, Global Standards, Codes and Environment
Jay.Taylor@schneider-electric.com
(512) 818-2073

We appreciate the opportunity to express comment on the proposed rulemaking for the State of California, Docket No. 09-AAER-2.

APC by Schneider Electric is the world's largest UPS manufacturer, with significant market share in the United States and California.

We manufacture, market and install Uninterruptible Power Supply (UPS) systems world-wide with power levels from a few hundred watts to several megawatts. In 2007, Schneider Electric acquired APC and combined it with MGE UPS Systems to form Schneider Electric's Critical Power & Cooling Services Business Unit, which recorded 2008 revenue of €2.6 billion and employed 12,000 people worldwide. In addition to UPSs, our other products include precision cooling units, racks, physical security and design, and management software.

For years APC has led the industry in the promotion and deployment of technologies that advance energy efficiency of both the UPSs and the IT systems they protect. As a corporation, we have led and contributed to numerous industry consortia and standards bodies that promote efficiency and safety. Examples are: European Code of Conduct for UPS, The Green Grid and the IEC 62040 series of standards.

The chart below exemplifies APC's continuous improvement in efficiency over time.

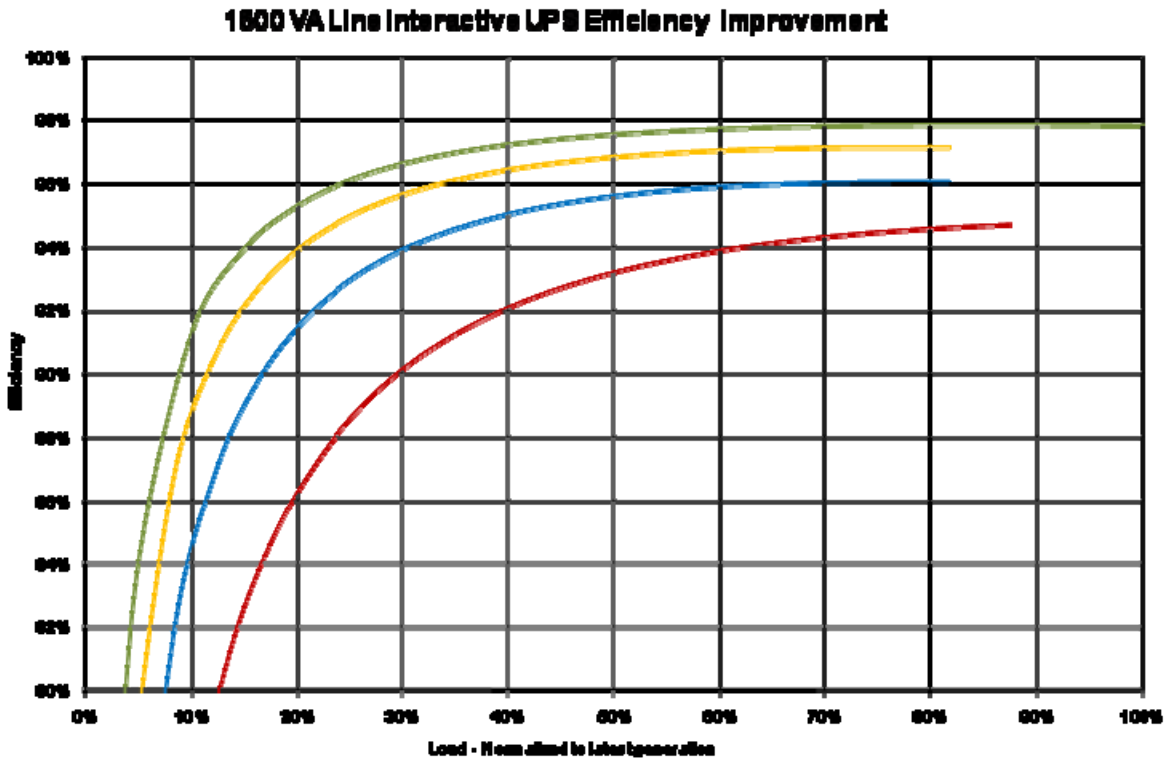

Unlike mobile phone chargers, power tool chargers and toy chargers, the UPS battery charger is designed to operate in an application where it provides longer life and higher reliability than the IT systems it protects. It must do this in an environment where the utility voltage is expected to range from 90 V to 130V and where ambient conditions of temperature can range from 0 to 40C.

In this application and environment, UPS battery chargers are designed to maximize availability of the battery while minimizing the potential for premature failures due to over temperature, overcharge and

undercharge. Further, the UPS battery charger must operate efficiently over a wide range of power in order to serve the need for fast recharge following a power event. To meet this requirement battery chargers in UPS systems are typically rated at 10-20% of the main UPS output.

While it is possible to add additional controls and independent chargers optimized for minimal power while float charging, this has historically been avoided by the industry as additional components lead to more potential failure points and an inherent decrease in reliability. We are always seeking and implementing new ways to improve efficiency while managing the necessary safety and reliability requirements of UPS systems including the battery charger subsystem.

An Introduction to UPS Systems and Terminology

In reviewing the standard for battery chargers we have noted areas of concern. Our interest, as a company, is in delivering the most efficient UPS systems for customers that reduce operations and acquisition costs. An Uninterruptable Power Supply according to Wikipedia is defined as follows:

> An uninterruptible power supply, also uninterruptible power source, UPS or battery/flywheel backup is an electrical apparatus that provides emergency power to a load when the input power source, typically the utility mains, fails. A UPS differs from an auxiliary or emergency power system or standby generator in that it will provide instantaneous or near-instantaneous protection from input power interruptions by means of one or more attached batteries and associated electronic circuitry for low power users, and or by means of diesel generators and flywheels for high power users. The on-battery runtime of most uninterruptible power sources is relatively short—5–15 minutes being typical for smaller units—but sufficient to allow time to bring an auxiliary power source on line, or to properly shut down the protected equipment.

As stated above the primary purpose or function of a UPS is NOT charging batteries. Static UPS systems fall into broad topology categories, three of which are Standby, Line Interactive and Double Conversion. Each of these topologies has a different baseline energy consumption. Also, none of our UPS systems currently have the capability to allow evaluation of battery charging subsystem in isolation. This is specifically due to the fact that by design battery chargers commonly share circuitry with, and provide power to, other UPS functions and subsystems. Adding battery charger isolation features would not only add cost and complexity, it could result in lower product reliability due to malfunction or misuse of these features.

UPS systems are designed for maximum reliability and near instantaneous response to protect electronic equipment from the following main power challenges: Surges, Sags, Spikes, Noise, Frequency Instability, Harmonic Distortion, and ultimately power failure. Architecturally, the circuits used in the topologies identified consume energy for performing these basic protection functions, and cannot be separated easily, safely or in some cases at all, due to that topology.

Internal voltages present on circuits within the UPS systems (and sometimes on battery terminals) are frequently hazardous, which is why UPSs are protected and enclosed. Black box testing is therefore preferred by industry to ensure safe and uniform testing across all models, manufacturers and brands.

Observations:

- Disconnecting the load from the UPS or turning the UPS output off does not allow for exclusive measurement of battery charger power consumption. Based on topology and other features that remain in operation, measured power consumption will be greater than that of the battery charging circuitry alone. Examples of UPS features that typically are in continuous operation include:
    a. Serial, USB and/or network communications interfaces
    b. Power quality monitoring and data logging
    c. User interfaces such as LED and LCD displays
    d. Line Interactive Circuitry (remains active even with output off to charge the batteries)

e. Double Conversion Circuitry (remains active even with output off to charge the batteries)

- Even though APC by Schneider Electric products are among the most efficient in the industry today; they all would be excluded under the rules as currently proposed (based on preliminary in house testing). We anticipate most UPS manufacturers are in the same position.
- Even with the extension of time to implement the regulations a complete re-design of the UPS product line is not possible by the July 1, 2013 implementation date.
- Tradeoffs to UPS system design to optimize battery charger performance could cause the UPS to be less efficient with the output on, resulting in a counterproductive increase in energy consumption.

UPS Topologies

Standby topologies are used for the least expensive consumer UPSs (typically < 1,500VA). These UPS systems also offer the least performance (IEC 62040-3 VFD category); powering low criticality devices such as desktop computers, workstations and home entertainment equipment. These systems include small capacity batteries (due to low UPS output power and only 3-5 minutes of runtime at full load) with dedicated low power (typically 24 hour) off-line charger which combine to result in low maintenance mode power. Because these products already include a dedicated low power charger they come the closest to complying with the proposed regulations and will require the least circuit modifications to comply.

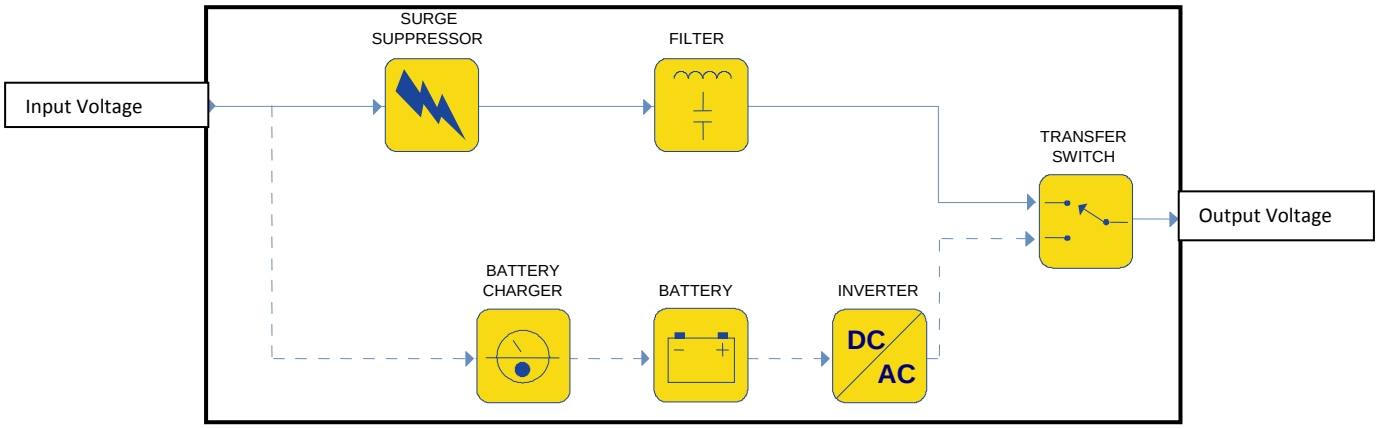

Diagram 1
Standby Topology UPS

All diagram's courtesy of Neil Rasmussen, APC White Paper Number 1.

As you can see from the diagram, the battery charger and battery circuitry is not in the direct path of power. However, other component such as filters and surge suppressors are. What this means practically is that measuring the battery charger components outside of the influence or control of other components is an unreasonable burden on the design for UPS systems.

Line interactive topologies are used for mid-range commercial UPSs (typically 750VA - 5,000VA). At mid-grade performance (IEC 62040-3 VI category), these UPS systems are used to power more critical devices such as small scale or SMB (small and medium business) servers, storage and networking equipment. They contain larger batteries (due to higher rated power and 5-10 minutes of runtime at full load) which combined with the use of the inverter running backwards as a high capacity (commonly 8 hour) battery charger results in higher maintenance mode power. Making these UPS products comply with proposed regulations would likely require adding a dedicated charger similar to that found in standby UPSs. This would be expensive and might not result in any real savings; as the dedicated charger would

only be used when off or lightly loaded resulting in no real energy savings for most users (who power their equipment continuously). Not all line interactive UPS's can charge batteries with the output off, further complicating testing (even more functions that can't be disabled operate with the output on).

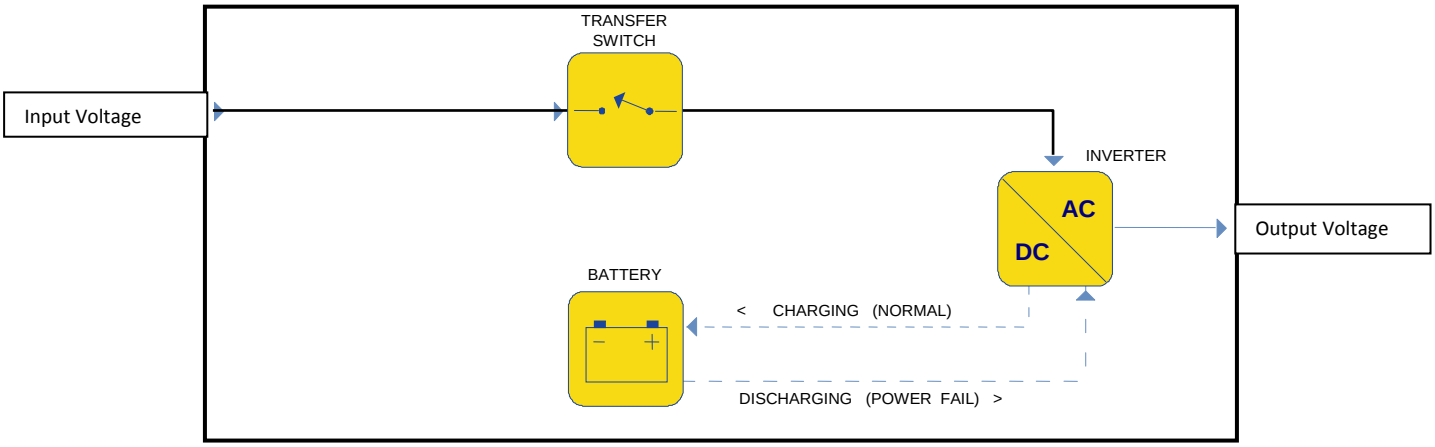

Diagram 2
Line Interactive UPS

As you can see from the diagram, the battery charger and battery circuitry is not in the direct path of power, as the charger is the inverter circuitry operating with reverse power flow. What this means practically is that measuring the battery charger components outside of the influence or control of other components is not possible.

Double conversion topologies are used for high end commercial UPSs (typically 1,000VA- 1,000,000VA). These offer the highest performance (IEC 62040-3 VFI category) and are used to power the most critical and sensitive equipment such as: enterprise servers, storage and networking equipment. They contain the largest batteries; offer the highest power and commonly provide10-15 minutes (or more) of runtime at full load. These features combined with the use of the main rectifier as a high capacity (8 hour) battery charger results in highest maintenance mode power of any topology. Making these products comply would likely require adding a dedicated charger similar to that found in standby UPSs. This would be very complex and expensive and most likely would not result in any real savings; for the reasons stated in the line interactive section above. Additionally, virtually none of the large double conversion UPS systems can charge batteries with the output off, further complicating testing.

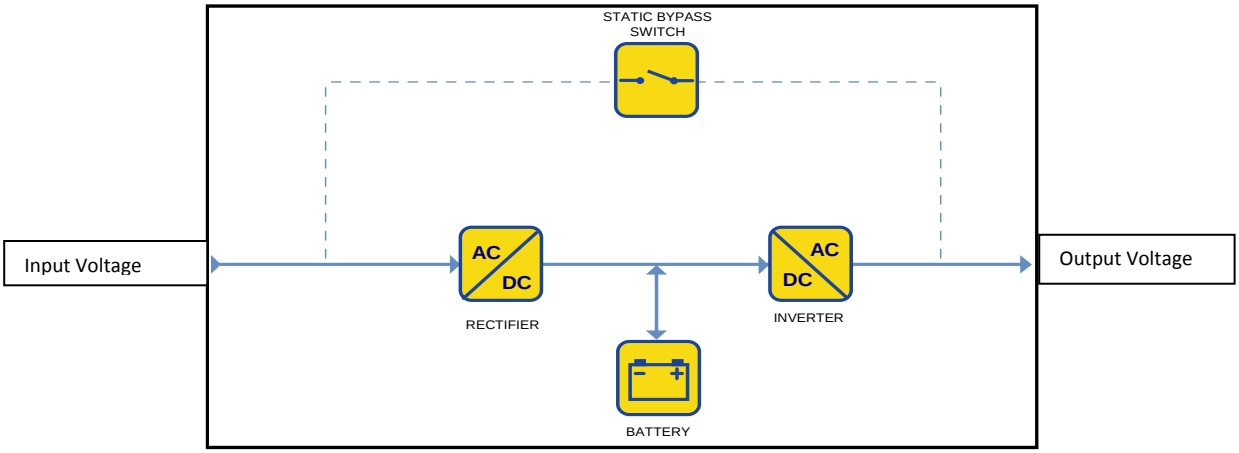

Diagram 3
Double Conversion

As you can see from the diagram the main rectifier acts as the battery charger. What this means practically is that measuring the battery charger components outside of the influence or control of other components (rectifier/inverter) is an unreasonable burden on the design for UPS systems.

Test Procedure Concerns

Generally speaking the test procedure is not targeted at UPS systems. Compliance testing in laboratories without specific UPS experience may bias tests to an unfavorable conclusion and may require multiple re-tests in the absence of the manufactures guidance. It is strongly recommended that UPS compliance testing be conducted in labs familiar with UPS testing technology.

Speaking as a former regulatory engineer, I am concerned with text in the General Setup section of the test procedure

> The battery charger system shall be prepared and set up in accordance with the manufacturer's instructions, except where those instructions conflict with the requirements of this test procedure. If no instructions are given, then factory or "default" settings shall be used, or where there are no indications of such settings, the UUT shall be tested as supplied. If the battery charger unit is powered by an external power supply, it shall be tested with the external power supply packaged with the unit.

This clause grants permission for the compliance testing laboratory to fail to acquire or ignore manufacturer's instructions, which could lead to unexpected results or catastrophic events within the system or unit under test. Clearly the intent of the language is to provide guidance to strict adherence of the test procedure. However, given the broad product coverage of the regulation, it is unknown if the compliance testing will be carried out in a laboratory that has specific experience with the systems in question. In this case we request, in the strongest possible terms, that the manufacturer be contacted by the compliance laboratory, in advance of testing, for instructions which fulfill the intent of the regulations and ensure the reliable and safe execution of the test procedure.

Recommendations

To simplify testing and improve compliance, we recommend that the scope and requirements of the initial regulations be altered as follows:

- The initial regulation should apply only to 120V and 208V; 1, 2 and 3 phase consumer and commercial UPSs rated below 10kVA
  - These UPS's represent by far the vast majority of unit shipments
  - Hence they account for the vast majority of battery charger energy
  - Additionally testing these UPS systems isn't as difficult or capital intensive as > 10kVA systems
  - Shipping, assembling, configuring and purchasing these UPS Systems is straightforward
  - UPSs like these are typically in inventory (so they can be randomly purchased for verification)
  - Nearly all UPSs of this size use lead acid VRLA batteries which makes comparisons equitable
- The full test procedure should be run with the output off or on at the manufacturer's choosing to determine:
  - Recharge time
  - Battery Energy E_b
  - Maintenance Mode Power (Actually UPS standby power)
  - No Battery Mode Power (Actually UPS standby power without a battery)
- Because UPSs almost never discharge and need to keep batteries at 100% capacity at all times, they need to constantly float charge
- Therefore, the only requirement for UPSs should be that $(P_{maint} - P_{nobatt}) < A + B^* E_b$
  - A and B will have to be determined by testing some UPSs and batteries
  - Initial estimates are that A = 0.3 and B = 0.0021

We separately request that industrial UPSs should be exempted entirely (very low volume, highly specialized, often customized).

Conclusion

Thank you for the opportunity to provide our assessment and thoughts on the proposed battery regulations for the State of California, Docket No. 09-AAER-2. Our interest is providing solid, reasonable business and technical advice on a topic of critical importance to the infrastructure of the State and the industry. We are available to provide specialized guidance and technology to deliver high efficiency solutions for the state.

Your consideration of this comment is greatly appreciated.

Jay L. Taylor
Director, Global Standards, Codes and Environment
Jay.Taylor@schneider-electric.com
(512) 818-2073