January 2, 2012

DOCKET
11-AAER-2
DATE JAN 02 2012
RECD. JAN 06 2012

NOTICE OF PROPOSED ACTION December 14, 2011

California Energy Commission
Dockets Office, MS-4
Re: Docket No. 11-AAER-2
1516 Ninth Street
Sacramento, CA 95814-5512

ATTN: Angelica Ramos
aromo@energy.state.ca.us

CC: Mr. Ken Rider
krider@energy.state.ca.us

Comment of APC by Schneider Electric

Jay L. Taylor
Director, Global Standards, Codes and Environment
Jay.Taylor@schneider-electric.com
(512) 818-2073

We appreciate the opportunity to express comment on the proposed rulemaking for the State of California, Docket No. 11-AAER-2. We endorse and support limiting the scope of the rulemaking to VFD UPS systems; we regret that VFD with voltage regulating transformers is still included within the scope of the rulemaking.

The proposed rulemaking is mostly unchanged from the prior revision. Our comment is essentially the same from the previous comment, with a few exceptions outlined below. We are concerned that the baseline information used to determine limits for battery chargers and by extension UPS systems is insufficient to determine a market value or range for this limit. We also regret that more UPS systems were not available in the population of battery chargers tested. Finding a single desired value out of less than ten measured UPS systems, against a backdrop of hundreds of systems in the market place does not suggest a thorough evaluation, nor does it indicate science or statistics behind the regulation's development.

We measured many additional systems which we believe represent more than 50% of the market space. Of those systems we measured none have the attribute of the single system that the rulemaking is written around and in fact are double or more of the proposed limit. We cannot determine from the information available of the system that does comply, if it does so through proprietary methods.

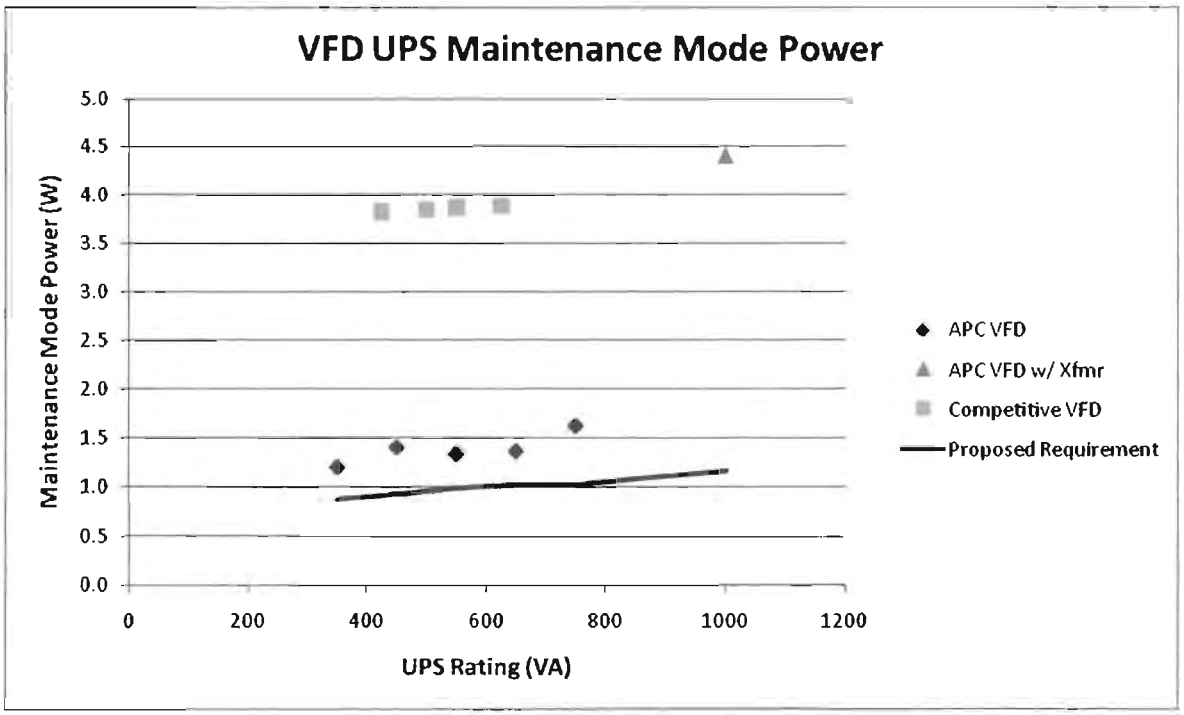


The second point made in testimony and in written form, is that the rulemaking assumes that all battery chargers are equal, regardless of the purpose of the equipment. This is not the case, and insufficient attention has been focused upon the differences in the marketplace of technology deployed across the equipment identified as containing battery chargers, such as UPS systems.

APC by Schneider Electric is the world's largest UPS manufacturer, with significant market share in the United States and California.

We manufacture, market and install Uninterruptible Power Supply (UPS) systems world-wide with power levels from a few hundred watts to several megawatts. In 2007, Schneider Electric acquired APC and combined it with MGE UPS Systems to form Schneider Electric's Critical Power & Cooling Services

Business Unit, which recorded 2008 revenue of €2.6 billion and employed 12,000 people worldwide. In addition to UPSs, our other products include precision cooling units, racks, physical security equipment and design and management software.

For years APC has led the industry in the promotion and deployment of technologies that advance the energy efficiency of both the UPSs and the IT systems they protect. As a corporation, we have led and contributed to numerous industry consortia and standards bodies that promote efficiency and safety. Examples include: European Code of Conduct for UPS, The Green Grid and the IEC 62040 series of standards.

The chart below exemplifies APC's continuous improvement in efficiency over time.

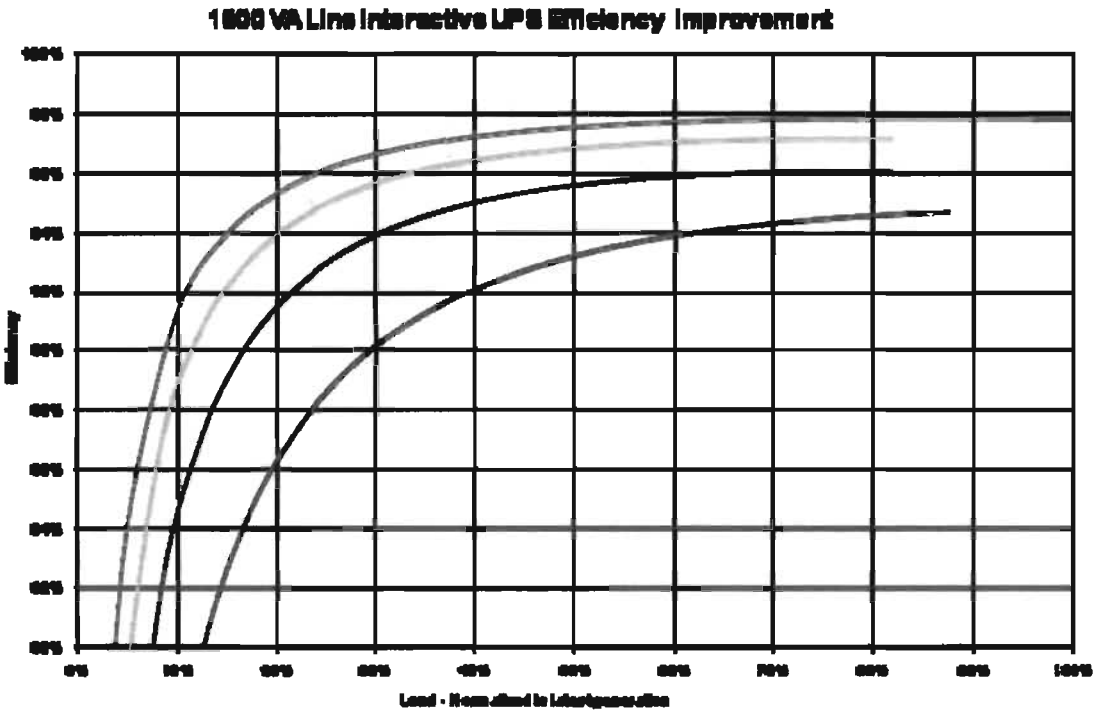


Unlike standard battery chargers (AAA, AA), mobile phone chargers, power tool chargers and toy chargers, the UPS battery charger is designed to operate in an application where it provides longer life and higher reliability for the IT systems it protects. It must do this in an environment where the utility voltage is expected to range from 90 V to 140V and where ambient conditions of temperature can range from 0 to 40C.

In this application and environment, the battery charger function of the UPS is designed to maximize availability of the battery while minimizing the potential for premature failures due to over temperature, overcharge and undercharge. Further, the battery charger function in the UPS must operate efficiently over a wide range of input voltage in order to serve the need for fast recharge following a power event. To meet this requirement battery chargers in UPS systems are typically rated at 10-20% of the main UPS output.

While it is possible to add additional controls and independent chargers optimized for minimal power while float charging, this has historically been avoided by the industry as additional components lead to more potential failure points and an inherent decrease in reliability. We are always seeking and

implementing new ways to improve efficiency (as demonstrated above) while managing the necessary safety and reliability requirements of UPS systems including, but not limited to the battery charger subsystem.

**UPS Systems and Terminology**

In reviewing the standard for battery chargers we have noted areas of concern. Our interest, as a company, is in delivering the most efficient UPS systems for customers that reduce operations and acquisition costs. An Uninterruptable Power Supply according to Wikipedia is defined as follows:

> *An uninterruptible power supply, also uninterruptible power source, UPS or battery/flywheel backup is an electrical apparatus that provides emergency power to a load when the input power source, typically the utility mains, fails. A UPS differs from an auxiliary or emergency power system or standby generator in that it will provide instantaneous or near-instantaneous protection from input power interruptions by means of one or more attached batteries and associated electronic circuitry for low power users, and or by means of diesel generators and flywheels for high power users. The on-battery runtime of most uninterruptible power sources is relatively short—5–15 minutes being typical for smaller units—but sufficient to allow time to bring an auxiliary power source on line, or to properly shut down the protected equipment.*

As stated above the primary purpose or function of a UPS is NOT charging batteries. None of our UPS systems currently have the capability to allow evaluation of battery charging subsystem in isolation. This is specifically due to the fact that by design battery chargers commonly share circuitry with, and provide power to, other UPS functions and subsystems. Adding battery charger isolation features would not only add cost and complexity, it could result in lower product reliability due to malfunction, unintended or misuse of these features.

UPS systems are designed for maximum reliability and near instantaneous detection and response to protect electronic equipment from many main power challenges such as: Surges, Sags, Spikes, Noise, Frequency Instability, Harmonic Distortion, and ultimately power failure. Architecturally, the circuits used in the topologies identified all consume energy when performing these basic protection functions, and cannot be separated easily, safely or in some cases at all, due to that topology.

Internal voltages present on circuits within the UPS systems (and sometimes on battery terminals) are frequently hazardous, which is why UPS systems are protected and enclosed. Black box testing is therefore preferred by industry to ensure safe and uniform testing across all models, manufacturers and brands.

Observations:

- The fact is that disconnecting the load from the UPS or turning the UPS's output off does not allow for exclusive measurement of battery charger power consumption. Based on topology and other features that remain in operation, measured power consumption will be greater than that of the battery charging circuitry alone. Examples of UPS features that typically are in continuous operation include:
    a. Serial, USB and/or network communications interfaces
    b. Power quality monitoring and data logging
    c. User interfaces such as LED and LCD displays
    d. Building wiring fault detection circuitry
    e. Line Interactive Circuitry (remains active even with output off to charge the batteries)
    f. Double Conversion Circuitry (remains active even with output off to charge the batteries)
- Even though APC by Schneider Electric products are among the most efficient in the industry today; they all would be excluded under the rules as currently proposed (based on preliminary in house testing). Our internal evaluations of competitive products indicate that our products are not unique in this regard.

- Assuming that it is possible to comply with the proposed regulations, redesigning our complete VFD product portfolio by the February 1, 2013 deadline will not be possible. The likely result of this will be the withdrawal of certain VFD products from the market, possibly driving some customers to more expensive and less efficient VI and VFI models (which are exempt from the regulations).
- Tradeoffs to UPS system design to optimize battery charger performance may cause the UPS to be less efficient with the output on, resulting in a counterproductive increase in energy consumption.

**UPS Topologies**

Standby topologies are used for the least expensive consumer UPSs (typically < 1,500VA). These UPS systems also offer the least performance (IEC 62040-3 VFD category); powering low criticality devices such as desktop computers, workstations and home entertainment equipment. These systems include small capacity batteries (due to low UPS output power and only 3-5 minutes of runtime at full load) with dedicated low power (typically 24-96 hour) off-line charger which combine to result in low maintenance mode power. Because many of these products already include a dedicated low power charger they are the closest to complying with the proposed regulations and will require the least circuit modifications to comply.

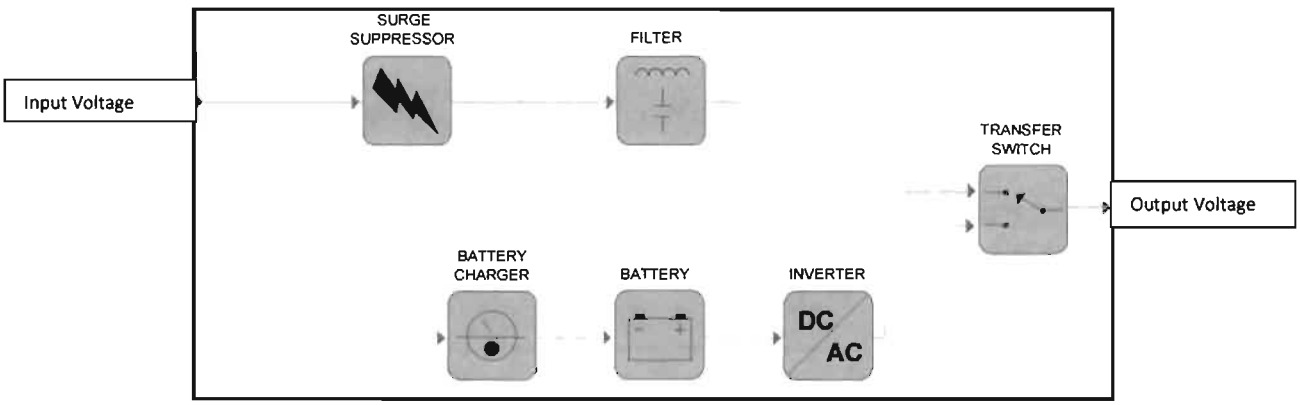


Diagram 1
Standby Topology UPS

All diagram's courtesy of Neil Rasmussen, APC White Paper Number 1.

As you can see from the diagram, the battery charger and battery circuitry is not in the direct path of power. However, other component such as filters and surge suppressors are. What this means practically is that measuring the battery charger components outside of the influence or control of other components is an unreasonable burden on the design for UPS systems.

Incorporating the IEC 62040,-3 2nd Edition reference eased but did not eliminate the concerns we have for testing or definitions. Specifically there are VFD UPSs with voltage regulating transformers capable only of correcting under-voltage. For the same reason that VI UPSs were excluded from the regulations, we recommend that VFD UPSs with transformers capable only of correcting under-voltage be excluded as well. This could also be accomplished by excluding all UPS systems with output Voltage Regulating Transformers.

**Test Procedure Concerns**

Specifically, and as identified previously the test procedure is not targeted at or useful for UPS systems. UPS systems are not architecturally similar to or electronically equivalent to consumer battery chargers. Many continuous processes are in place to measure and, manage power even in simple VFD Standby UPS designs.

**Battery Charger Limits**

A thoughtful review of available data leaves us with a crucial issue. The proposed requirements for battery chargers are not met by current UPS systems. As described above the UPS systems is NOT just a battery charger. As identified above, many continuous processes are in place. These management features are essential to the UPS performing its function. In our measurements of APC and competitive UPS systems we have not found ANY systems meeting the current criteria as established in the docket 11-AAER-2. Despite data provided of the one UPS system identified by The Department of Energy, in their data.

We also requested the data set information from the Federal activities be released so that we could evaluate a potentially wider field of UPSs. Unfortunately it was not and still is not available in time for this writing. We are concerned that the measurements we made on APC and competitive UPS systems are significantly higher than the proposed requirements. If the requirements are implemented as published with no functional adders as we previously proposed, then VFD Standby UPS system may not continue to be available in the California marketplace after January 1, 2013.

**APC By Schneider Electric Recommendations**

1. All UPSs with output Voltage Regulating Transformers or at least VFD UPSs capable only of correcting under-voltage should be excluded from the regulations.

2. We still recommend that in recognition of the non-battery charger functionality of UPSs, that the maintenance mode requirement for VFD UPSs without output Voltage Regulating Transformers be changed to $1.8 + 0.0021 \times E_b$ Watts. If VFD UPSs with output Voltage Regulating Transformers are not excluded, we recommend a maintenance mode requirement of $3.8 + 0.0021 \times E_b$ Watts for these UPSs. We believe that our proposals are achievable and that they would still remove a significant percentage of inefficient UPSs from the California market.

3. The 15 month implementation period is insufficient for manufacturers to execute a rulemaking of this magnitude, especially where we know of no UPSs systems currently in the marketplace that achieve the proposed requirements. Accordingly, we recommend that the effective date for consumer UPSs be changed to July 1, 2014.

4. To simplify testing and improve compliance, we recommend that the requirements of the initial regulations be altered as follows:

   - The full test procedure should be run with the output off or on at the manufacturer's choosing to determine:
     - Recharge time
     - Battery Energy $E_b$
     - Maintenance Mode Power (Actually UPS standby power)
     - No Battery Mode Power (Actually UPS standby power without a battery)
   - Because UPSs almost never discharge and need to keep batteries at 100% capacity at all times, they need to constantly float charge
   - Therefore, the only requirement for UPSs should be that $(P_{maint} - P_{nobatt}) < A + B \times E_b$

- A and B will have to be determined by testing some UPSs and batteries
- Initial estimates are that A = 0.3 and B = 0.0021

**Conclusion**

Thank you for the opportunity to provide our evaluation and thoughts on the proposed battery regulations for the State of California, Docket No. 11-AAER-2. Our interest is providing solid, reasonable business and technical advice on a topic of critical importance to the infrastructure of the State and the industry. We remain available to provide specialized guidance and technology to deliver high efficiency solutions for the state.

We will need significant relief in the scope, the maintenance mode power requirements and the time allotted to comply with the proposed regulations. We are concerned that the proposed requirements are not currently achieved by any UPSs in the global marketplace, from our measurements thus far. Implementing the regulations as identified may force withdrawal of systems and limit consumer choice from the California marketplace.

Your consideration of this comment is greatly appreciated.

Jay L. Taylor
Director, Global Standards, Codes and Environment
Jay.Taylor@schneider-electric.com
(512) 818-2073