Errata
2013 Residential Alternative Calculation Method (ACM) Reference Manual

Page	Description of Change
Abstract	Clarify that software vendors are not required to include all aspects of the ACM Reference Manual (e.g., scope is new construction only and not additions/alterations)
p. 5	Clarifying statement that PV systems must also meet Appendix RA4.6.1
pp. 9-10	Refining language to distinguish orientation (side of the building) and azimuth (degrees)
p. 15	Non-standard or advanced wall framing will be reported as a special feature
p. 18	Changes to reflect: (1) capacity of wall furnaces and space heaters is not an input, (2) until there is an approved compliance option, ductless air conditioners and heat pumps (e.g., mini-split heat pumps and multi-split VRF systems) are simulated as a default central system with ducts in the attic (a system equivalent to the standard design), and (3) non-ducted systems are compared to a default system with ducts in the attic
pp. 19-22	Define the calculation method for combined hydronic
p. 22	Until there is an approved compliance option, ground source heat pumps are simulated as a default central system with ducts in the attic (a system equivalent to the standard design)
p. 23	Change to reflect that capacity is not an input for non-central cooling systems
p. 25	Correction in definition for room air conditioner
p. 32	The standard design for a non-ducted systems is a system with ducts in the attic
p. 40	Clarify that zonal control cannot be used with heat pump heating
p. 40	Document the exception for additions 1,000 square feet or less from indoor air quality requirements (see Section 150.2)
p. 42	Document the exception for additions 1,000 square feet or less from whole house fan requirements being included in the standard design (see Section 150.2)
p. 50	Refining language to distinguish orientation (side of the building) and azimuth (degrees)
p. 53	Correct reference to the Solar Heat Gain Coefficient for climate zones with no requirement to have a numerical value of 0.50 SHGC

pp. 54-55	Remove the placeholder for exterior shading devices because the calculation procedures used in the software do not have procedures for anything other than bug screens; include language to prevent use of prescriptive worksheets to calculate a Solar Heat Gain Coefficient for use in the performance approach
pp. 57-58	Correct error in default value for roof solar reflectance and emittance, update term emissivity to emittance, and update reporting for a cool roof versus non-standard values
p. 64	Matching change from pp. 57-58 for the roof reflectance and thermal emittance of cathedral ceilings
pp. 66-69	Refining language for domestic hot water: (1) tank insulation is an allowed input only for indirect water heaters, (2) change the name assigned to mini tanks (temperature buffering tank with tankless water heaters) and indirect (or unfired) water heaters, (3) remove outdated language for a standard distribution, (4) remove unused distribution system type, (5) correct the fuel type used in the standard design, and (6) add details for water heating systems serving multi-family buildings (Table 2-22)
p. 70	Remove phrase “not yet implemented” for additions/alterations
p. 71-72	Language for existing + addition + alteration updated to reflect terms used by the program and how third party verification was implemented (applied to each individual alteration rather than all alterations)
p. 78	Non-substantive change to add the phrase “the standard design for space conditioning systems is shown in” Table 2-29
p. 79	Clarify that whole house fan (WHF) applies only if the addition is greater than 1,000 ft2.

Appendix A – ACM TESTS

A-1	Final description of ACM Tests, adding the description of an addition/alteration prototype
A-10	Correcting error in the size of the front wall and front garage knee wall for the two-story prototype description
A-12 – 17	Descriptions and diagrams of the Addition/Alteration prototype building

Appendix C – SPECIAL FEATURES

C-1	Add two new assembly types that will trigger a special features note on the CF1R

Appendix E – WATER HEATING CALCULATION METHOD

E-3	Remove unused term from the equation for distribution system losses
E-6	Update Table RE-2 Distribution System Multipliers and correct references to Section 120.3 (not 123)
E-11	Correct references to Section and Table 120.3 (not 123)

2013

RESIDENTIAL ALTERNATIVE CALCULATION METHOD

REFERENCE MANUAL

FOR THE 2013 BUILDING
ENERGY EFFICIENCY
STANDARDS

APRIL 2014
CEC-400-2013-003-SD

CALIFORNIA ENERGY COMMISSION
Edmund G. Brown Jr., Governor

ABSTRACT

The 2013 Building Energy Efficiency Standards for Low-Rise Residential Buildings allow compliance by either a prescriptive or performance method. Performance compliance uses computer modeling software to trade off efficiency measures. For example, to allow more windows, the designer will specify more efficient windows, or to allow more west-facing windows they will install a more efficient cooling system. Computer performance compliance is typically the most popular compliance method because of the flexibility it provides in the building design.

Energy compliance software must be certified by the Energy Commission, following rules established for the modeling software. This document establishes the rules for the process of creating a building model, describing how the proposed design (energy use) is defined, how the standard design (energy budget) is established, and ending with what is reported on the Certificate of Compliance (CF1R). This document DOES NOT specify the minimum capabilities of vendor-supplied software. The Energy Commission reserves the right to approve vendor software for limited implementations of what is documented in this manual.

This Residential Alternative Calculation Methods (ACM) Reference Manual explains how the proposed and standard designs are determined. If the minimum heating system has 78% AFUE and the proposed building has a 92% AFUE furnace, the standard design is based on 78% and the proposed design gets credit for a 92% AFUE furnace. The desired result is a positive compliance margin showing how the building performs as compared to the standard design for heating, cooling, water heating, indoor air quality/ventilation, and water heating.

The 2013 Compliance Manager is the simulation and compliance rule implementation software specified by the Energy Commission. The Compliance Manager, called California Building Energy Code Compliance (CBECC), models all features that affect the energy performance of the building. This document establishes the process of creating a building model. Each section describes how a given component, such as a wall, is modeled for the proposed design, standard design, and ends with what is reported on the Certificate of Compliance (CF1R) for verification by the building enforcement agency.

Keywords: ACM, Alternative Calculation Method, Building Energy Efficiency Standards, California Energy Commission, California Building Energy Code Compliance, CBECC, Certificate of Compliance, CF1R, compliance manager, compliance software, computer compliance, energy budget, energy standards, energy use, performance compliance, design, proposed design, standard design

2.2.2 Standards Version

This input determines which federal appliance efficiency requirements for cooling equipment apply to the project. It allows the user to choose compliance that will be valid only before the federal requirements change or compliance that will be valid both before and after the change in January 2015. Eligibility for solar electric system credit is only allowed with Compliance 2015.

PROPOSED DESIGN

The user inputs a choice of:

Compliance 2014: valid only through December 2014 (with current federal air conditioning efficiency requirements)

Compliance 2015: valid any time (with 2015 federal air conditioning requirements) and solar credit.

STANDARD DESIGN

The standard design cooling equipment efficiency is based on the specified version of the federal requirements. If Compliance 2015 is selected, a minimum SEER and (if applicable) an EER that meets the 2015 standard for the type and size of equipment modeled.

VERIFICATION & REPORTING

Compliance version is reported on the CF1R.

2.2.3 PV System Credit

For users with single family and town house projects in climate zone 9 through 15 who select Compliance 2015 to comply under the updated federal appliance standards, there is a credit available for photovoltaic (PV) systems that meet the eligibility requirements of Residential Appendix RA4.6.1. The PV systems must be 2 kWdc or larger. The credit is the smaller of:

PV Generation Rate (kTDV/kWdc) * kWdc

Max PV Cooling Credit * Standard Design Cooling Energy (kTDV)

Where the factors are shown in Table 2-1.

Table 2-1: PV Credit Calculation Factors

Climate Zone	PV Generation Rate (kTDV/kWdc)	Max PV Cooling Credit (% of Standard Design Cooling kTDV/ft2)
09	30269	13%
10	30342	15%
11	29791	18%
12	29556	17%
13	29676	17%
14	31969	16%
15	29536	19%

2.2.7 Number of Bedrooms

PROPOSED DESIGN

The number of bedrooms in a building is used to establish mechanical ventilation requirements and to determine if a building qualifies as a compact building for purposes of incentive programs.

STANDARD DESIGN

The standard design shall have the same number of bedrooms as the proposed design.

VERIFICATION AND REPORTING

The number of bedrooms is reported on the CF1R for use in field verification.

2.2.8 Dwelling Unit Types

Internal gains and indoor air quality (IAQ) ventilation calculations depend on the conditioned floor area and number of bedrooms. For multi-family buildings with individual IAQ ventilation systems each different combination of bedrooms and conditioned floor area has a different minimum ventilation cfm that must be verified. A dwelling unit type is one or more dwelling units in the building, each of which has the same floor area, number of bedrooms and appliances.

PROPOSED DESIGN

For each dwelling unit type the user inputs the following information:

- Unit name
- Number of this unit in building
- Conditioned floor area (CFA) in square feet per dwelling unit
- Number of bedrooms

STANDARD DESIGN

The standard design shall have the same number and type of dwelling units as the proposed design.

VERIFICATION AND REPORTING

The number of units of each type and minimum IAQ ventilation for each unit is reported on the CF1R for use in field verification.

2.2.9 Front Orientation

The input for the building front orientation is the actual azimuth of the front of the building. This will generally be the side of the building where the front door is located. The orientation of the other sides of a building viewed from the outside looking at the front door are called front, left, right, ~~and~~ back, or a value relative to the front, and the compliance software calculates the~~ir~~ actual azimuth from this input. Multiple orientation compliance can be selected for newly constructed buildings only.

PROPOSED DESIGN

The user chooses whether compliance is for all orientations or for a site-specific orientation. For the specific orientation case, input the actual azimuth of the front in degrees.

STANDARD DESIGN

The compliance software constructs a standard design building that has 25 percent of the wall and window area facing each cardinal orientation.

VERIFICATION AND REPORTING

A typical reported value would be "290 degrees (west)". This would indicate that the front of the building faces north 70° west in surveyors terms. The closest orientation on 45° compass points should be reported in parenthesis, e.g., north, northeast, east, southeast, south, southwest, west or northwest. When compliance is shown for multiple orientations, "all orientations" or “cardinal” is reported as a Special Feature on the CF1R.

2.2.10 Natural Gas Availability

The user specifies whether natural gas is available at the site. This is used to establish the TDV values from Reference Appendices JA3 used by the compliance software in determining standard and proposed design energy use.

PROPOSED DESIGN

The user specifies whether natural gas is available at the site.

STANDARD DESIGN

The standard design has natural gas space and water heating if natural gas is available at the site; otherwise it is propane.

VERIFICATION AND REPORTING

Whether natural gas is or is not available is reported on the CF1R.

2.2.11 Attached Garage

The user specifies whether there is an attached garage. The garage zone is modeled as an unconditioned zone (see Section 2.9).

PROPOSED DESIGN

The user specifies whether there is an attached unconditioned garage.

STANDARD DESIGN

The standard design has the same attached garage assumption as the proposed design.

VERIFICATION AND REPORTING

The presence of an attached garage is reported on the CF1R.

2. Cathedral ceiling (with the roof defined as part of the assembly), wood or metal framed. Since there is no attic, the roof structure is connected to the insulated assembly at this point.

3. Roof, structurally insulated panels (SIP).

4. Walls (interior, or exterior), wood or metal framed, or SIP.

5. Floors (over exterior, over crawl space, or interior).

CONSTRUCTION LAYERS:

All assemblies have a cavity path and a frame path.

Spray foam insulation may use either default values with no special inspection requirements, or higher values when supported by an ICC report (see details Section 2.3.3 and RA3.5) verified by a HERS rater.

As assemblies are completed, the screen displays whether the construction meets the prescriptive requirement for that component.

PROPOSED DESIGN

The user defines a construction for each surface type included in the proposed design. Any variation in insulation R-value, framing size or spacing, interior or exterior sheathing or interior or exterior finish requires the user to define a different construction. Insulation R-values are based on manufacturer's rated properties rounded to the nearest whole R. Layers such as sheetrock, wood sheathing, stucco and carpet whose properties are not compliance variables are included as generic layers with standard thickness and properties.

Walls separating the house from an attached unconditioned attic or garage are modeled as interior walls with unconditioned space as the adjacent zone, which the compliance manager recognizes as a demising wall. Floors over a garage are modeled as floor over exterior. The exterior walls, floor, ceiling/roof of the garage are modeled as part of the unconditioned garage zone.

STANDARD DESIGN

The compliance software assembles a construction that meets the prescriptive standards for each user-defined construction or assembly.

VERIFICATION AND REPORTING

All proposed constructions, including insulation, frame type, frame size, and exterior finish or exterior condition are listed on the CF1R. Non-standard framing (e.g., 24" on center wall framing, advanced wall framing) is reported as a special feature.

PROPOSED DESIGN

The user selects the type and supplies inputs for the heating subsystem in the heating system data screen shown in Figure 2-4 and Figure 2-5. The user inputs the appropriate rated heating efficiency factor. The rated heating capacity is not a compliance variable and is calculated for use in the simulation by the compliance software for all systems except heat pumps. For heat pumps the user inputs the rated heating capacity at 47°F and 17°F for the heat pump compressor to be installed and the software sizes the backup electric resistance heat for use in the simulation.

~~If the system is a non-ducted, non-central gas heating system (wall furnace, floor furnace, room heater), the compliance software shall require the user to select the type and heating capacity of the equipment to establish the standard design efficiency. As a default, 34 Btu/hour per square foot of conditioned floor area may be assumed as the heating capacity.~~

Systems rated with a Coefficient of Performance (COP) only must calculate the Heating Seasonal Performance Factor (HSPF) for use in performance compliance:

Equation 2-1 HSPF = (3.2 x COP) – 2.4

Until there is an approved compliance option for ductless heat pumps (mini-split, multi-split VRF systems) they are simulated as a split system equivalent to the standard design with default duct conditions.

STANDARD DESIGN

When electricity is used for heating, the heating equipment for the standard design is an electric split system heat pump with a Heating Seasonal Performance Factor (HSPF) meeting the Appliance Efficiency Regulations requirements for split systems~~, unless the proposed design is a room heat pump, in which case the standard design is the same~~ with default ducts in the attic. The standard design heat pump compressor size is determined by the software based on the compressor size calculated for the air conditioning system.

When electricity is not used for heating, the equipment used in the standard design building is a gas furnace (or propane if natural gas is not available) with default ducts in the attic and an Annual Fuel Utilization Efficiency (AFUE) meeting the Appliance Efficiency Regulations minimum efficiency for central systems~~, unless the proposed design is a non-ducted system, in which case the standard design is the same~~. When a proposed design uses both electric and non-electric heat, the standard design is a gas furnace.

Figure 2-4: Heating System Data Screen

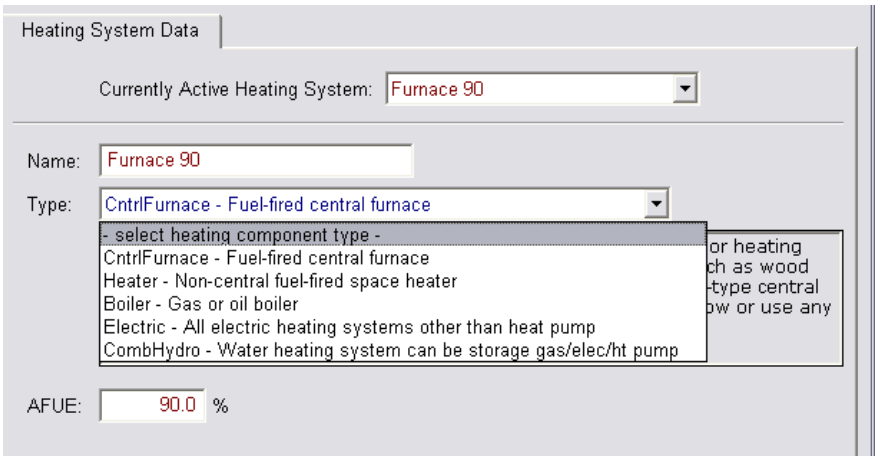

Figure 2-5: Heating System Data Screen

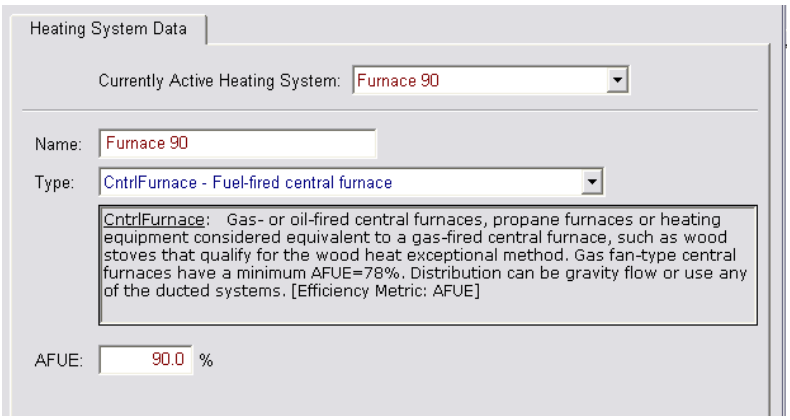

VERIFICATION AND REPORTING

The proposed heating system type and rated efficiency are reported in the compliance reports. The rated heating capacity of each proposed heat pump is reported on the CF1R so that installed size can be verified to be at least as large.

2.4.2 Combined Hydronic Space/Water Heating

Combined hydronic space/water heating is a system whereby a water heater is used to provide both space heating and water heating. Dedicated hydronic space heating systems are also an optional capability. Space heating terminals may include fan coils, baseboards, and radiant surfaces (floors, walls or ceilings).

For combined hydronic systems, the water heating portion is modeled in the normal manner. For space heating, an effective AFUE is calculated for gas water heaters. For electric water heaters or heat pumps, an effective HSPF is calculated. The procedures for calculating the effective AFUE or HSPF are described below.

Combined hydronic space conditioning cannot be combined with zonal control credit.

PROPOSED DESIGN

When a fan coil is used to distribute heat, the fan energy and the heat contribution of the fan motor must be considered. The algorithms for fans used in combined hydronic systems are the same as those used for gas furnaces and are described in Chapter 3.

If a large fan coil is used and air distribution ducts are located in the attic, crawlspace or other unconditioned space, the efficiency of the air distribution system must be determined using methods consistent with those described in Section 2.4.6. Duct efficiency is accounted for when the distribution type is ducted.

~~2.4.1.1~~2.4.2.1 Large or Small Storage Gas Water Heater

When storage gas water heaters are used in combined hydronic applications, the effective AFUE is given by the following equation:

Equation 2-2 $$AFUE_{eff} = RE - \left[\frac{PL}{RI}\right]$$

Where:

$AFUE_{eff}$ = The effective AFUE of the gas water heater in satisfying the space heating load.

RE = The recovery efficiency (or thermal efficiency) of the gas water heater. A default value of 0.70 may be assumed if the recovery efficiency is unknown. This value is generally available from the Energy Commission appliance directory.

PL = Pipe losses (kBtu/h). This can be assumed to be zero when less than 10 feet of piping between the water heater storage tank and the fan coil or other heating elements are located in unconditioned space (see Equation

RI = The rated input of the gas water heater (kBtu/h) available from the Energy Commission's appliance directory.

~~2.4.1.2~~2.4.2.2 Storage Electric Water Heater

The HSPF of storage water heaters used for space heating in a combined hydronic system is given by the following equations.

Equation 2-3 $$HSPF_{eff} = 3.413\left[1 - \frac{PL}{3.413kWi}\right]$$

Where:

$HSPF_{eff}$ = The effective HSPF of the electric water heater in satisfying the space heating load.

PL = Pipe losses (kBtu/h). This can be assumed to be zero when less than 10 feet of piping between the water heater storage tank and the fan coil or other heating elements are located in unconditioned space (see Equation

RI = The kilowatts of input to the water heater available from the Energy Commission's appliance directory.

~~2.4.1.3~~2.4.2.3 Heat Pump Water Heater

The HSPF of heat pump water heaters used for space heating in a combined hydronic system is given by the following equations. If the system has a fan coil, the HSPFeff is used. HSPFw/o_fan is used if there is no fan coil.

Equation 2-4
$$HSPF_{eff} = 3.413\left[\frac{RE_{hp}}{CZ_{adj}} - \frac{PL}{3.413kWi}\right]$$

Where:

$HSPF_{eff}$ = The effective HSPF of the electric water heater in satisfying the space heating load.

CZ_{adj} = The climate zone adjustment (see Appendix E Table RE-3).

PL = Pipe losses (kBtu/h). This can be assumed to be zero when less than 10 feet of piping between the water heater storage tank and the fan coil or other heating elements are located in unconditioned space (see Equation

RI = The kilowatts of input to the water heater available from the Energy Commission's appliance directory.

RE_{hp} = The recovery efficiency of the heat pump water heater. Equation 2-8 may be used as a default if the recovery efficiency is not known.

Equation 2-5
$$RE_{hp} = \frac{1}{\frac{1}{EF_{DOE}} - 0.1175}$$

Where:

EF_{DOE} = The energy factor of the heat pump water heater when tested according to the DOE test procedure.

STANDARD DESIGN

When electricity is used for heating, the heating equipment for the standard design is an electric split system heat pump with a Heating Seasonal Performance Factor (HSPF) meeting the Appliance Efficiency Regulations requirements for split systems, unless the proposed design is a room heat pump, in which case the standard design is the same. The standard design heat pump compressor

size is determined by the software based on the compressor size calculated for the air conditioning system.

When electricity is not used for heating, the equipment used in the standard design building is a gas furnace (or propane if natural gas is not available) with default ducts in the attic and an Annual Fuel Utilization Efficiency (AFUE) meeting the Appliance Efficiency Regulations minimum efficiency for central systems. When a proposed design uses both electric and non-electric heat, the standard design is a gas furnace.

When propane is used for a combined hydronic system, the water heater is electric.

~~2.4.2~~2.4.3 Special Systems – Hydronic Distribution Systems and Terminals

PROPOSED DESIGN

This listing is completed for hydronic systems that have more than 10 feet of piping (plan view) located in unconditioned space. As many rows as necessary may be used to describe the piping system.

STANDARD DESIGN

The standard design is established for a hydronic system in the same way as for a central system, as described in Section 2.4.1.

VERIFICATION AND REPORTING

A hydronic or combined hydronic system is reported in the *Special Features* listing on the CF1R.

Other information reported includes:

- *Piping Run Length (ft).* The length (plan view) of distribution pipe located in unconditioned space, in feet, between the primary heating/cooling source and the point of distribution.
- *Nominal Pipe Size (in.).* The nominal (as opposed to true) pipe diameter in inches.
- *Insulation Thickness (in.).* The thickness of the insulation in inches. Enter "none" if the pipe is uninsulated.
- *Insulation R-value (hr-ft^2- °F/Btu).* The installed R-value of the pipe insulation. Minimum pipe insulation for hydronic systems is as specified in §150.1(j).

~~2.4.3~~2.4.4 Ground Source Heat Pump

~~There is no current method~~ Until there is an approved compliance option for ~~modeling a~~ ground source heat pump systems to accurately represent this ~~feature~~system, which uses the earth as a source of energy for heating and as a heat sink for energy when cooling, a split system equivalent to the standard design with default duct conditions is substituted for the proposed system. The mandatory efficiencies for ground water source heat pumps are a minimum Coefficient of Performance (COP) for heating and EER for cooling.

~~2.4.4~~2.4.5 Cooling Subsystems

The cooling subsystem describes the equipment that supplies cooling to an HVAC System.

Figure 2-6: Cooling System Data

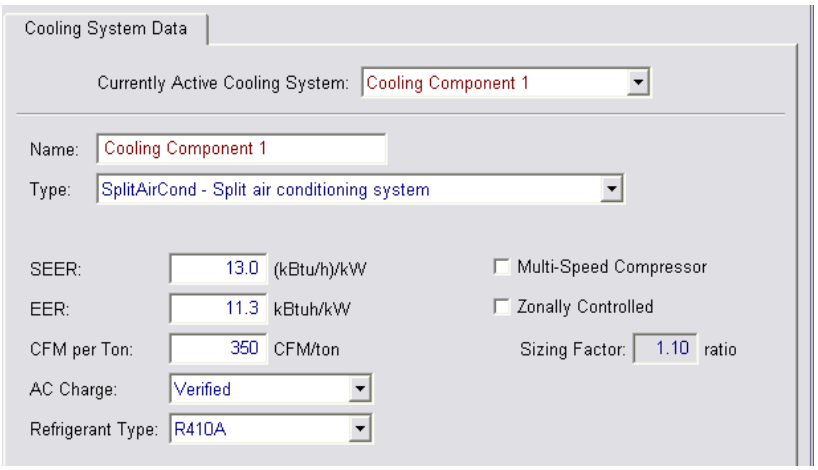

PROPOSED DESIGN

The user selects the type of cooling equipment from Table 2-7 and enters basic information to model the energy use of the equipment. At a minimum, enter the cooling equipment descriptor, zoning type (Table 2-8), and SEER. The default is NotZonal. For ducted cooling systems the cooling air flow from the conditioned zone through the cooling coil is an input. ~~For some cooling system types, the software shall require the user to select the type and capacity of the equipment, which is used to establish the standard design efficiency from the Appliance Efficiency Regulations (such as room air conditioners, room air conditioning heat pumps, package terminal air conditioners and package terminal heat pumps).~~ The rated cooling capacity is not a compliance variable. See sections below for the details of specific inputs.

STANDARD DESIGN

The cooling system for the standard design building is a no~~t~~n zonal control split system air conditioner or heat pump meeting the minimum requirements of §150.1(c) and Table 150.1-A. The standard design system shall assume verified refrigerant charge in climate zones 2 and 8 through 15 for all ducted split systems, ducted package systems, and mini-split systems. Mandatory fan efficacy is assumed in all climate zones.

VERIFICATION AND REPORTING

Information shown on the CF1R includes cooling equipment type, cooling efficiency (SEER and/or EER). Measures requiring verification are listed on the in the HERS Verification section of the CF1R.

~~2.4.4.1~~2.4.5.1 Verified Refrigerant Charge or Charge Indicator Display

Proper refrigerant charge is necessary for electrically driven compressor air conditioning systems to operate at full capacity and efficiency. Software calculations set the compressor efficiency multiplier to 0.90 to account for the impact of improper refrigerant charge or 0.96 for proper charge.

Table 2-7: HVAC Cooling Equipment Descriptors

Recommended Descriptor	Cooling Equipment Reference
NoCooling	Entered when the proposed building is not cooled or when cooling is optional (to be installed at some future date). Both the standard design equivalent building and the proposed design use the same default system (refer to section 2.4.8.3). [Efficiency metric: SEER]
SplitAirCond	Split air conditioning systems. Distribution system is one of the ducted systems. [Efficiency metric: SEER and EER]
PkgAirCond	Central packaged air conditioning systems less than 65,000 Btuh cooling capacity. Distribution system is one of the ducted systems. [Efficiency metric: SEER and EER]
LrgPkgAirCond	Large packaged air conditioning systems rated at or above 65,000 Btu/hr (cooling capacity). Distribution system is one of the ducted systems. [Efficiency metric: EER]
DuctlessSplitAirCondSystem	One or more split air conditioning outdoor units that use refrigerant to transport cooling to at least one terminal in each habitable space in the dwelling unit. These include small ductless mini-split and multiple-split heat air conditioners and packaged terminal (commonly called "through-the-wall") units. Cooling is not distributed using ducts either inside or outside of the conditioned space. [Efficiency metric: EER]
RoomAirCond	Same as DuctlessSplitAirCondSystem except that ~~heat~~cooling is not supplied to each habitable space in the dwelling unit. [Efficiency metric: EER]
SplitHeatPump	Cooling side of split heat pump systems. Distribution system is one of the ducted systems. [Efficiency metric: SEER and EER<65,000 Btu/hr EER>65,000 Btu/hr]
PkgHeatPump	Cooling side of central single-packaged heat pump systems with a cooling capacity less than 65,000 Btuh. Distribution system is one of the ducted systems. [Efficiency metric: SEER]
LrgPkgHeatPump	Cooling side of large packaged heat pump systems rated at or above 65,000 Btu/hr (cooling capacity). Distribution system is one of the ducted systems. [Efficiency metric: EER]
GasCooling	Gas absorption cooling. Three descriptors, COP95 (the rated COP for the gas portion), CAP95 (the rated capacity), and PPC (the parasitic electric energy at rated conditions in Watts).
DuctlessHeatPumpSystem	One or more heat pump outdoor units that use refrigerant to transport cooling to at least one terminal in each habitable space in the dwelling unit. These include small ductless mini-split and multiple-split heat pumps and packaged terminal (commonly called "through-the-wall") units. Cooling is not distributed using ducts either inside or outside of the conditioned space. [Efficiency metric: EER]
RoomHeatPump	Same as DuctlessHeatPumpSystem except that cooling is not supplied to each habitable space in the dwelling unit. [Efficiency metric: EER]
EvapDirect	Direct evaporative cooling systems. Assume minimal efficiency air conditioner. The default distribution system location is DuctAttic; evaporative cooler duct insulation requirements are the same as those for air conditioner ducts. [Efficiency metric: SEER]
EvapIndirDirect	Indirect-direct evaporative cooling systems. Assume energy efficiency ratio of 13 EER. Requires air flow and media saturation effectiveness from the CEC directory.
EvapIndirect	Indirect cooling systems. The default distribution system location is DuctAttic; evaporative cooler duct insulation requirements are the same as those for air conditioner ducts. Assume energy efficiency ratio of 13 EER. Requires air flow and media saturation effectiveness from the CEC directory.
Evap/CC	Evaporatively Cooled Condensers. A split mechanical system, with a water-cooled condenser coil. (Efficiency metric: EER)

Table 2-8: Cooling Zonal Control Descriptors

Zoning Type	Description
ZonalSingleSpeed	A ducted cooling system with a single speed compressor and zone control dampers
ZonalMultiSpeed	A ducted cooling system with a multiple speed or variable speed compressor and zone control dampers
ZonalSingleSpeedBypass	A zonally controlled HVAC system with a bypass duct
ZonalSingleSpeedNoBypass	A zonally controlled HVAC system with no bypass duct
NotZonal	Any cooling system that has no zone control dampers

Measure	Description	Procedures
Low Leakage Air-handling Units	Compliance credit can be taken for installation of a factory sealed air handling unit tested by the manufacturer and certified to the Commission to have met the requirements for a Low Leakage Air-Handling Unit achieved. Field verification of the air handler's model number is required. Duct Sealing is required.	RA3.1.4.3.9
Verified Return Duct Design	Verification to confirm that the return duct design conforms to the criteria given in Table 150.0-C or Table 150.0-D. as an alternative to meeting 0.58 W/cfm fan efficacy of §150.0(m)0.	RA3.1.4.4
Verified Air Filter Device Design	Verification to confirm that the air filter devices conform to the requirements given in §150.0(m)12.	RA3.1.4.5
Verified Bypass Duct Condition	Verification to determine if system is zonally controlled, and confirm that bypass ducts condition modeled matches installation.	RA3.1.4.6

1.Compliance credit for increased duct insulation R-value (not buried ducts) may be taken without field verification if the R-value is the same throughout the building, and for supply ducts located in crawl spaces and garages where all supply registers are either in the floor or within 2 feet of the floor. These two credits may be taken subject only to enforcement agency inspection.

STANDARD DESIGN

The standard heating and cooling system for central systems is modeled with non-designed air distribution ducts located as described in Table 2-12, with verified tested duct leakage (see Table 2-15). The standard design duct insulation is determined by Package A as R-6 in climate zones 1-10, 12-13, and R-8 in climate zones 11 and 14-16. The standard design building is assumed to have the same number of stories as the proposed design for purposes of determining the duct efficiency. ~~For non-central HVAC systems, the standard design shall have no ducts.~~

Table 2-12: Summary of Standard Design Duct Location

Configuration of the Proposed Design	Standard Design	
	Standard Design Duct Location	Detailed Specifications
Attic over the dwelling unit	Ducts and air handler located in the attic	Ducts sealed (mandatory requirement) No credit for verified R-value, location or duct design
No attic but crawl space or basement	Ducts and air handler located in the crawl space or basement	
Multi-family buildings and buildings with no attic, crawl space or basement	Ducts and air handler located indoors	

This table is applicable only when the standard design system has air distribution ducts as determined inTable 2-10.

VERIFICATION AND REPORTING

Distribution type, location, R-value, and whether tested and sealed will be shown on the CF1R. If there are no ducts, this is shown as a special feature on the CF1R. Any duct location other than attic (e.g., crawl space) is shown as a special feature on the CF1R. Ducts in crawl space or basement shall include a special feature note if supply registers are located within 2 feet of the floor. Measures that require HERS verification will be shown in the HERS Verification section of the CF1R.

STANDARD DESIGN

The standard design system is the same as the proposed design.

VERIFICATION AND REPORTING

No cooling is reported as a special feature on the CF1R.

~~2.4.7.4~~2.4.8.4 Zonal Control

With zonal control, the sleeping and living areas are modeled separately for heating, each with its own separate thermostat schedule and internal gain assumptions. Zonal control cannot be modeled with heat pump heating. The total non-closable opening area between zones cannot exceed 40 ft^2. Other eligibility criteria for this measure are presented in the Residential Compliance Manual, Chapter 4, Section 4.5.2.

PROPOSED DESIGN

The user selects zonal control as an HVAC system input.

STANDARD DESIGN

The standard design does not have zonal control.

VERIFICATION AND REPORTING

Zonal control is reported as a *Special Feature* on the CF1R.

~~2.4.8~~2.4.9 Indoor Air Quality Ventilation

The standards require mechanical ventilation that complies with ASHRAE Standard 62.2 to provide acceptable indoor air quality for all newly constructed buildings and additions greater than 1,000 square feet. ASHRAE Standard 62.2 provides several ways to comply with the requirement for mechanical ventilation and these are described in the Residential Compliance Manual.

For the purposes of estimating the energy impact of this requirement in compliance software, the minimum ventilation rate is met either by a standalone IAQ fan system or a central air handler fan system that can introduce outdoor air. In many cases, this energy is substantially compliance neutral because the standard design is typically set equal to the proposed design.

The simplest IAQ fan system is an exhaust fan like a bathroom fan that meets the criteria in ASHRAE Standard 62.2 for air delivery and low noise. More advanced IAQ fan systems that have a supply or both supply and exhaust fans are also possible. To calculate the energy use of standalone IAQ fan systems, the systems are assumed to be on continuously.

To calculate the energy use of central fan integrated ventilation, the systems are assumed to be on for at least 20 minutes each hour as described below. The fan flow rate and fan power ratio may be different than the values used when the system is on to provide for heating or cooling depending on the design or controls on the IAQ ventilation portion of the system.

Table 2-17: CF1R Report – Indoor Air Quality

IAQ System Name	IAQ System Type	Whole Building IAQ Airflow Rate (cfm)	Standalone IAQ Fan Power Ratio (W/cfm)

~~2.4.9~~2.4.10 Ventilation Cooling System

Ventilation cooling systems operate at the dwelling unit level using fans to bring in outside air to cool the house when this can reduce cooling loads and save cooling energy. Ventilation cooling systems such as whole house fans involve window operation and attic venting. Central fan ventilation cooling systems use the HVAC duct system to distribute ventilation air. Ventilation cooling systems operate according to the schedule and setpoints shown in Table 2-18. Ventilation cooling systems that exhaust air through the attic require a minimum of 1 ft^2 of free attic ventilation area per 1000 cfm of rated capacity for relief (see §150.1(c)12 of the standards).

PROPOSED DESIGN

Software allows the user to specify whether a ventilation cooling system will be used in conditioned and living zones (see Table 2-18). The default is none.

STANDARD DESIGN

The standard design building for a newly constructed building or for an addition greater than 1,000 square feet has a whole house fan with 2 cfm/ft^2 conditioned floor area in climate zones 8 through 14 and no ventilation cooling in other climate zones (see §150.1(c) and Table 150.1-A).

VERIFICATION AND REPORTING

A ventilation cooling system is a *special feature* and the size and type is reported on the CF1R. A variable speed ventilation cooling system requires HERS verification of the make/model number and controls using the CF2R-MECH-30.

Table 2-18: Ventilation Cooling Fans

Measure	Description
Whole House Fan	Traditional whole house fan mounted in the ceiling to exhaust air from the house to the attic, inducing outside air in through open windows. Whole house fans are assumed to operate between dawn and 11 PM only at 25% of rated cfm to reflect manual operation of fan and windows by occupant. Fans must be listed in the California Energy Commission's Whole House Fan directory. If multiple fans are used, enter the total cfm.
Central Fan Ventilation Cooling Variable or fixed speed	Central fan ventilation cooling system. Ventilation type uses a special damper to induce outdoor air and distribute it through the HVAC duct system.

PROPOSED DESIGN

The software allows the user to define cathedral ceilings and enter the area and select a construction assembly for each. The user also enters the roof characteristics of the surface.

STANDARD DESIGN

The non-attic ceiling/roof areas of the standard design building are equal to the non-attic ceiling/roof areas of the proposed design. The standard design roof and ceiling surfaces are assumed to be horizontal (no tilts). The standard design is modeled with the same construction assembly as the proposed design but with Package A insulation R-value. The aged reflectance and emittance of the standard design are determined by §150.1(c) and Table 150.1-A for the applicable climate zone.

VERIFICATION AND REPORTING

Non-attic ceiling/roof area and construction are reported on the CF1R. Metal frame or SIP assemblies are reported as a special feature on the CF1R.

2.5.6.3 Exterior Walls

PROPOSED DESIGN

The software allows the user to define walls, enter the gross area and select a construction assembly for each. The user also enters the plan orientation (front, left, back or right) or plan azimuth (value relative to the front which is represented as 0 degrees) and tilt of the wall.

The wall areas modeled are consistent with the actual building design and the total wall area is equal to the gross wall area with conditioned space on the inside and unconditioned space or exterior conditions on the other side. Walls adjacent to unconditioned spaces with no solar gains (such as knee walls or garage walls) are entered as an interior wall with the zone on the other side as attic or garage and the compliance manager treats that wall as a demising wall. The unconditioned space is modeled as an unconditioned zone.

STANDARD DESIGN

The gross exterior wall area in the standard design is equal to the gross exterior wall area of the proposed design. If the proposed wall area is framed wall, the gross exterior wall area of framed walls in the standard design (excluding knee walls) is equally divided between the four main compass points, north, east, south, and west. Window and door areas are subtracted from the gross wall area to determine the net wall area in each orientation. Walls adjacent to unconditioned space (garage walls) for all climate zones are wood framed, 2x4, 16-in. o.c., R-15 cavity insulation.

VERIFICATION AND REPORTING

Exterior wall area and construction details are reported on the CF1R. Metal frame or SIP assemblies are reported as a special feature on the CF1R.

The net wall area on each orientation is reduced by the fenestration area (and door area) on each facade. The U-factor and SHGC performance factors for the standard design are taken from the §150.1(c) and Table 150.1-A (Package A). Where Package A has no requirement, the SHGC is set to 0.~~66~~50.

VERIFICATION AND REPORTING

Fenestration area, U-factor, SHGC, orientation, and tilt are reported on the CF1R.

2.5.6.7 Overhangs and Sidefins

PROPOSED DESIGN

Software users enter a set of basic parameters for a description of an overhang and sidefin for each individual fenestration or window area entry. The basic parameters include *fenestration height, overhang/sidefin length, and overhang/sidefin height.* Compliance software user entries for overhangs may also include *fenestration width, Overhang left extension* and *overhang right extension.* Compliance software user entries for sidefins may also include *fin left extension* and *fin right extension* for both left and right fins. Walls at right angles to windows may be modeled as sidefins.

Figure 2-9: Overhang Dimensions

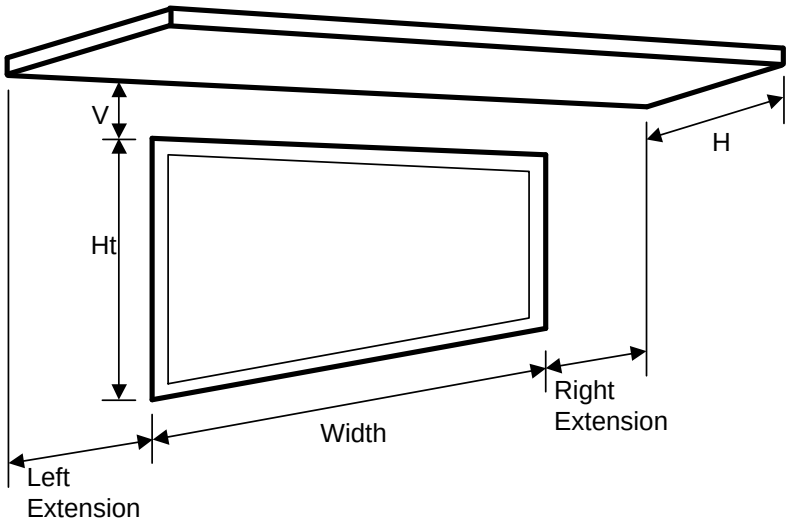

Figure 2-10: Side Fin Dimensions

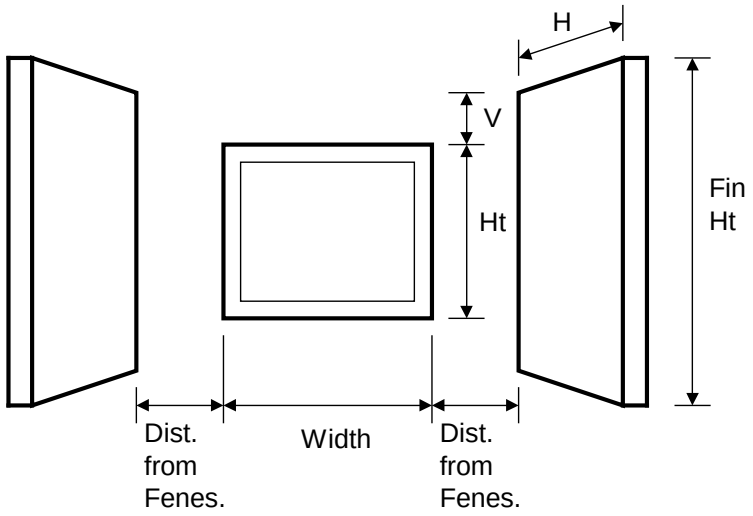

STANDARD DESIGN

The standard design does not have overhangs or side fins.

VERIFICATION AND REPORTING

Overhang and fin dimensions are reported on the CF1R.

2.5.6.8 Interior Shading Devices

For both the proposed and standard design, all windows are assumed to have draperies and skylights are assumed to have no interior shading. Window medium drapes are closed at night and half open in the daytime hours. Interior shading is not a compliance variable and is not user editable.

2.5.6.9 Exterior Shading

For both the proposed and standard design, all windows are assumed to have bug screens and skylights are assumed to have no exterior shading. Exterior shading is modeled as an additional glazing system layer using the ASHWAT calculation.

PROPOSED DESIGN

The compliance software shall require the user to ~~either~~ accept the default exterior shading devices ~~or select from a specific Commission-approved list of exterior shading devices for each fenestration element (see Table 2-22). The default choice for exterior shading device is *Standard*~~, which are bug screens for windows and none for skylights. Credit for shading devices that are allowable for prescriptive compliance are not allowable in performance compliance.

STANDARD DESIGN

The standard design shall assume bug screens. The standard design does not have skylights.

~~VERIFICATION AND REPORTING~~

~~Any exterior shading other than standard exterior shading is a *Special Feature* reported on the CF1R.~~

~~Table 2-22: Allowed Exterior Shading Devices and Recommended Descriptors~~

~~Recommended Descriptor~~	~~Exterior Shading Device Reference~~	~~Solar Heat Gain Coefficient~~
~~Standard~~	~~Bug Screen or No Window Shading~~	~~0.76~~
~~WvnScrn~~	~~Woven SunScreen (SC<0.35)~~	~~0.30~~
~~LvrScrn~~	~~Louvered Sunscreen~~	~~0.27~~
~~LSASnScrn~~	~~LSA Sunscreen~~	~~0.13~~
~~RlDwnAwng~~	~~Roll-down Awning~~	~~0.13~~
~~RlDwnBlnds~~	~~Roll-down Blinds or Slats~~	~~0.13~~
~~None (see Note 1)~~	~~For skylights only - No exterior shading~~	~~1.00~~

~~Note 1: None is the default for fenestration tilted less than 60 degrees from horizontal (skylights). None is not an exterior shading option for vertical windows.~~

2.5.6.10 Walls and Floors Between Zones

The user must model unconditioned attached zones such as garages, crawl spaces, and basements.

PROPOSED DESIGN

The user inputs the area and construction of walls and floors between zones.

STANDARD DESIGN

The standard design shall have the same wall and floor areas and the constructions meet §150.1(c) and Table 150.1-A.

VERIFICATION AND REPORTING

Areas and construction of interzone surfaces is reported on the CF1R.

2.5.6.11 Slab on grade floors

PROPOSED DESIGN

The software allows users to enter areas and exterior perimeter of slabs that are heated or unheated, covered or exposed slab, and with or without with slab edge insulation. Perimeter is the length of wall between conditioned space and the exterior, but does not include edges that cannot be insulated, such as between the house and the garage. The default condition for the proposed design is that 80 percent of each slab area is carpeted or covered by walls and cabinets, and 20 percent is exposed. Inputs other than the default condition require that carpet and exposed slab conditions are documented on the construction plans.

When the proposed heating distribution is radiant floor heating (heated slab), the software user will identify that the slab is heated and model the proposed slab edge insulation. The mandatory minimum requirement is R-5 insulation in climate zones 1-15 and R-10 in climate zone 16 (§110.8(g), Table 110.8-A).

STANDARD DESIGN

The standard design perimeter lengths and slab on grade areas are the same as the proposed design. Eighty percent of standard design slab area is carpeted and 20 percent is exposed. For the standard

2.6.1 Attic Components

2.6.1.1 Roof Rise

This is the ratio of rise to run (or pitch), and refers to the number of feet the roof rises every 12 feet. For roofs with multiple pitches the roof rise that makes up the largest roof area is used.

2.6.1.2 Vent Area

This value is the vent area as a fraction of attic floor area. This value is not a compliance variable and is assumed to be a value equal to attic floor area/300.

2.6.1.3 Fraction High

The fraction of the vent area that is high due to the presence of ridge, roof or gable end mounted vents. Soffit vents are considered low ventilation. Default value is 0 for attics with standard ventilation. Attics with radiant barriers are required to have a vent high fraction of at least 0.3.

2.6.1.4 Roof Deck/Surface Construction

Typical roof construction types are concrete or clay tile, metal tile or wood shakes, or other high or low sloped roofing types.

2.6.1.5 Solar Reflectance

This input is a fraction that specifies the certified aged reflectance of the roofing material or 0.1 default value~~s~~ for uncertified materials. The installed value must be equal to or higher than the value specified here. Roof construction with a roof membrane mass of at least 25 lb/ft^3 or a roof area that has integrated solar collectors is assumed to meet the minimum solar reflectance.

2.6.1.6 ~~Emissivity~~Emittance

The certified aged emittance (or emissivity) of the roofing material, or a default value. The installed value must be equal to or greater than the value modeled here. Default value is 0.~~9~~85 if certified aged thermal emittance ~~reflectance~~ value is not available from the Cool Roof Rating Council (www.coolroofs.org). Roof construction with a roof membrane mass of at least 25 lb/ft^3 or roof area incorporated integrated solar collectors are assumed to met the minimal emittance.

PROPOSED DESIGN

The conditioning is either ventilated or conditioned. Each characteristic of the roof is modeled to reflect the proposed construction. Values for solar reflectance and ~~emissivity~~emittance shall be default or from the Cool Roof Rating Council.

Roofs with PV systems or with thermal mass over the roof membrane with a weight of at least 25 lb/ft^2 may model the Package A values for solar reflectance and ~~emissivity~~emittance.

STANDARD DESIGN

The standard design depends on the variables of the climate zone and roof slope. Low-sloped roofs (with a roof rise of 2 feet in 12 or less) in climate zones 13 and 15 will have a standard design aged solar reflectance of 0.63 and a thermal emittance of 0.75.

Steep-sloped roofs in climate zones 10 through 15 will have a standard design roof with an aged solar reflectance of 0.20 and a minimum thermal emittance of 0.75.

Roofs with PV systems or with thermal mass over the roof membrane with a weight of at least 25 lb/ft^2 are assumed to meet the standard design values for solar reflectance and thermal emittance.

VERIFICATION AND REPORTING

Each input of Section 2.3.2 Attics modeled for the proposed design is reported on the CF1R for verification. A reflectance of 0.20 or higher is reported as a cool roof, a value higher than the default but less than 0.20 is reported as a non-standard roof reflectance value.

2.6.2 Ceiling Below Attic

PROPOSED DESIGN

For each conditioned zone, the user enters the area and construction of each ceiling surface that is below an attic space. The compliance software shall allow a user to enter multiple ceiling constructions. Surfaces that tilt 60 degrees or more are treated as knee walls and are not included as ceilings. The sum of areas shall equal the overall ceiling area with conditioned space on the inside and unconditioned attic space on the other side.

The compliance software creates an attic zone whose floor area is equal to the sum of the areas of all of the user input ceilings below an attic in the building. The user specifies the framing and spacing, the materials of the frame path and the R-value of the insulation path for each ceiling construction.

The user inputs the proposed insulation R-value rounded to the nearest whole R. For simulation, all ceiling below attic insulation is assumed to have nominal properties of 2.6 R/inch, a density of 0.5 lb/ft^3 and a specific heat of 0.2 Btu/lb.

STANDARD DESIGN

The standard design shall have the same area of ceiling below attic as the proposed design. The ceiling/framing construction is based on the Package A prescriptive requirement and standard framing is assumed to be 2x4 wood trusses at 24 inches on center.

VERIFICATION AND REPORTING

The area, insulation R-value, and layer of each construction is reported on the CF1R.

2.6.3 Attic Roof Surface and Pitch

PROPOSED DESIGN

The roof pitch is the ratio of run to rise, e.g., 4:12 or 5:12. If the proposed design has more than one roof pitch, the pitch of the largest area is used.

Above deck mass. The above deck mass depends on the roofing type. The mass is 10 lb/ft² for concrete and clay tile and 5 lb/ft² for metal tile, wood shakes or other high slope roofing types. For low slope roofs the additional thermal mass is assumed to be gravel or stone and the user chooses one of the following inputs that is less than or equal to the weight of the material being installed above the roof deck:

- No mass
- 5 lb/ft²
- 10 lb/ft²
- 15 lb/ft²
- 25 lb/ft²

STANDARD DESIGN

The roof type and slope shall match the proposed design.

VERIFICATION AND REPORTING

The roof type is reported on the CF1R.

2.6.6.6 Solar Reflectance and Thermal Emittance

PROPOSED DESIGN

The compliance software shall allow the user to default the solar reflectance and thermal emittance of the roofing. The solar reflectance default is ~~0.08 for asphalt shingles or composition roof and~~ 0.10 for all ~~other~~ roof types. The thermal emittance default is 0.85.

The compliance software shall allow the user to input aged solar reflectance and thermal emittance of roofing material that are rated by the Cool Roof Rating Council (CRRC). The installed value must be equal to or higher than the value specified here. Roof construction with a roof membrane mass of at least 25 lb/ft³ or roof area incorporated integrated solar collectors are assumed to meet the minimal solar reflectance.

STANDARD DESIGN

The solar reflectance and thermal emittance of the standard design roofing are as specified in the prescriptive Standards.

VERIFICATION AND REPORTING

Thermal emittance and solar reflectance shall be reported on the CF1R. A reflectance of 0.20 or higher is reported as a cool roof, a value higher than the default but less than 0.20 is reported as a non-standard roof reflectance value.

2.9 Garage/Storage

An attached unconditioned space is modeled as a separate unconditioned zone. While the features of this space have no effect on compliance, it is modeled to accurately represent the building. The walls and door that separate the conditioned zone from the garage are modeled as part of the conditioned zone.

Proposed Design

The software user will model the area and type for the floor, exterior walls (ignore windows), large metal roll-up or wood doors (assume a 1.0 U-factor), and roof/ceiling (typically an attic or the same as the conditioned zone).

Standard Design

The standard design building has the same features as the proposed design.

Verification and Reporting

The presence of an attached garage or unconditioned space is reported as general information on the CF1R. The general characteristics of the unconditioned zone are reported on the CF1R.

2.10 Domestic Hot Water (DHW)

Water heating energy use is based on the number of dwelling units, fuel type, distribution system, water heater type, and conditioned floor area (up to 2500 ft^2).

Proposed Design

The water heating system is defined by the tank type, heater element type, distribution type, multi-family central water heating distribution, efficiency (either energy factor or recovery efficiency with the standby loss), tank volume, exterior insulation R-value (only for ~~large storage or unfired~~indirect) and rated input.

Tank types include:

- Small storage: <= 75,000 Btu gas/propane, <=105,000 Btu/hr oil, <= 12 kW electric, or <= 24 amps heat pump.
- Small tankless: gas or propane with an input of 200,000 Btu per hour or less, oil with an input of 210,000 Btu per hour or less, or electric with an input of 12 kW or less. Tankless water heater is a water heater with an input rating of >= 4,000 Btu per hour per gallon of stored water. Rated with an energy factor.
- Large storage: > 75,000 Btu gas/propane, >105,000 Btu/hr oil, or > 12 kW electric. Rated with thermal efficiency and standby loss.

- Large tankless: gas or propane with an input of >200,000 Btu per hour, oil with an input of >210,000 Btu per hour, or electric with an input of >12 kW. Tankless water heater is a water heater with an input rating of >= 4,000 Btu per hour per gallon of stored water. Rated with thermal efficiency.

- Mini~~Buffer~~ tank: a ~~mini~~ temperature buffering ~~tank~~ electric heater sometimes used with gas tankless to mitigate ~~temperature~~ fluctuations between draws (units not listed in the appliance database use a standby loss (in Watts) of 100).

- ~~Unfired~~Indirect: a tank with no heating element or combustion device used in combination with a boiler or other device serving as the heating element.

- Boiler: a water boiler that supplies hot water. Rated with Thermal Efficiency or AFUE.

Heater element type includes:

- Electric resistance
- Natural gas/oil
- Propane, or
- Heat pump.

Distribution system types for systems serving an individual dwelling unit include:

- Standard (the full length of the line from the water heater to the kitchen fixtures and all piping of nominal ¾″ or larger diameter insulated with 1 inch of insulation~~to a R-4, any piping 1″ or larger in diameter is limited to a total length of 15 feet (see eligibility criteria)~~
- Pipe Insulation, All Lines
- Insulated and Protected Pipe Below Grade
- Parallel Piping
- Recirculation, Non-Demand Control
- Recirculation, Demand Control Push Button
- Recirculation, Demand Control Occupancy/Motion
- HERS Required Pipe Insulation, All Lines
- HERS Required Insulated and Protected Pipe Below Grade
- HERS Required Parallel Piping
- ~~HERS Required Recirculation, Non-Demand Control~~
- HERS Required Recirculation, Demand Control Push Button
- HERS Required Recirculation, Demand Control Occupancy/Motion
- HERS Required Point of Use
- HERS Required Compact Distribution System

Distribution types for multi-family central hot water heating include:

- No Control
- Recirculating Demand Control
- Recirculating Temperature Modulation Control
- Recirculating Temperature Modulation and Monitoring (standard design for new construction)
- Dual loop design for buildings with 8 or more dwelling units w/HERS Verification (can be combined with any of the recirculating conditions)
- Increased pipe insulation w/HERS verification (can be combined with any of the recirculating conditions).

Some distribution systems have an option to increase the amount of credit received if the option for HERS verification is selected. See Appendix E for the amount of credit and Reference Appendices, Residential Appendix Table RA2-1 for a summary of inspection requirements.

STANDARD DESIGN

Individual dwelling units: The standard design is based on §150.1(c)8. For single-family dwellings or dwelling units served by a dedicated water heating system, each dwelling unit has one small storage (< 75000 Btu), 50-gallon gas storage water heater, meeting minimum federal Energy Factor standard (0.575 in 2014, 0.60 in 2015). If natural gas is not available, the fuel type is the same as the proposed fuel type, meeting the minimum federal Energy Factor standard for propane (0.575 in 2014, 0.60 in 2015)~~,~~ or electric (0.904 in 2014, 0.945 in 2015) ~~if natural gas is not available~~. The distribution type is either standard or, if a recirculating system is shown in the proposed design, a recirculating system with manual controls.

Table 2-22: Standard Design for Systems Serving Multiple Dwelling Units

Does the proposed water heating system have a storage tank?	Yes	Is the input rating of each water heater in the proposed design less than or equal to 75,000 Btu/h or if electric, less than or equal to 12 kW?	Yes	Standard design is one or more NAECA gas or propane water heater. If natural gas is available at the site, the standard design is a gas water heater, otherwise it is electric. If the total storage volume of the proposed design is less than 100 gallons, then the standard design is single water heater with a storage volume equal to the total storage volume of the proposed design. If the total storage volume of the proposed design is larger than 100 gallons, then the standard design shall have multiple water heaters. The number of water heaters is equal to the total storage capacity of the proposed design divided by 100 and rounded up. The EF of each 100 gallon water heater shall be based on the compliance year as: 2014 Gas-fired EF = 0.67 – (0.0019*Vol) Electric EF = 0.97 – (0.00132*Vol) 2015 Gas-fired > 20 - < 55 gal EF = 0.675 – (0.0015*Vol) > 55 - < 100 gal EF = 0.8012 – (0.00078*Vol) Electric > 20 - < 55 gal EF = 0.960 – (0.0003*Vol)

				> 55 - < 100 gal EF = 2.057 – (0.00113*Vol) See specification of distribution system below.
			No	Standard design is composed of the same number of large storage gas or propane water heaters as in the proposed design with a storage volumes the same as the storage volumes of the proposed design. If natural gas is available at the site, the standard design is a gas water heater, otherwise it is electric. The thermal efficiency is 0.80 and stand-by losses are as specified in the Appliance Efficiency Regulations See specification of distribution system below.
	No	Standard design is the same number of natural gas or propane instantaneous water heaters as in the proposed design with input ratings equal to those in the proposed design. If natural gas is available at the site, the standard design is a gas water heater, otherwise it is electric. Efficiency of the instantaneous water heaters shall be: 2014 Input < 200000 < 2 gal EF = 0.62 – (0.0019*Vol) 2015 Input < 200000 < 2 gal EF = 0.82 – (0.0019*Vol) Any Input > 200000 80% Thermal Efficiency See specification of distribution system below.			

Multiple dwelling units: If the proposed design is a central water heating system the standard design is the same type of water heater equipment (natural gas, if available or electric meeting minimum appliance efficiency standard) as the proposed design meeting the minimum appliance efficiency requirements. The system includes a recirculation system with controls that regulate pump operation based on measurement of hot water demand and hot water return temperature, is capable of turning off the system (§110.3(c)2), has two recirculation loops (if serving more than eight dwelling units) with efficiency based on Nonresidential Appendix NA6, and incorporates provisions of §110.3(c)5:

1) Air release valve or vertical pump installation,
2) Recirculation loop backflow prevention,
3) Equipment for pump priming,
4) Pump isolation valves,
5) Cold water supply and recirculation loop connection to hot water storage tank, and
6) Cold water supply backflow prevention.

A central water heating system standard design also includes a solar fraction of 0.20 in climate zones 1 through 9, and 0.35 in climate zones 10 through 16.

Verification and Reporting

All modeled features and the number of devices modeled for the water heating system are reported on the CF1R. Where distribution systems specify HERS verification, those features are listed in the HERS Required Verification listings on the CF1R.

2.10.1 Solar Water Heating Credit

When a water heating system has a solar system to provide part of the water heating, the Solar Fraction (SF) is determined using an F-chart program, OG-100 or OG-300 calculation method (see www.gosolarcalifornia.org). The calculation method requires that the user specify the climate zone and conditioned floor area, in addition to published data for the solar water heating system.

2.11 Additions/Alterations

~~Not yet implemented.~~

Addition and alteration compliance is based on standards §150.2. Alterations must model the entire dwelling unit. Additionally, if there is no addition the standards require at least two components of the residence are altered (see 150.2(b)2). Additions may be modeled as an entirely new building (whole building), addition alone, or as "existing+addition+alteration".

2.11.1 Whole Building

The entire proposed building, including all additions and/or alterations, is modeled the same as a newly constructed building. The building complies if the proposed design uses equal or less energy than the standard design. This is a difficult standard to meet as the existing building usually does not meet current standards and must be substantively upgraded.

2.11.2 Addition Alone Approach

The proposed addition alone is modeled the same as a newly constructed building except that the internal gains are prorated to the size of the dwelling and any surfaces such as walls or ceilings that are between the existing building and the addition are modeled not included in the calculations. The addition complies if the proposed design uses equal or less space heating and space cooling TDV energy than the standard design.

The Addition Alone Approach shall not be used when alterations to the existing building are proposed. Modifications to any surfaces between the existing building and the addition are part of the addition and are not considered alterations.

PROPOSED DESIGN

The user shall indicate that an addition alone is being modeled and enter the conditioned floor area of the addition. Any surfaces that are between the existing building and the addition are not modeled or treated as an adiabatic surfaces. All other features of the addition shall be modeled as for a newly constructed building.

When an existing HVAC system is extended to serve the addition, the proposed design shall assume the same efficiency for the HVAC equipment as the standard design (or Package A, see

Sections 2.4.1 and 2.4.5). When a dual-glazed greenhouse or garden window is installed in an addition or alteration, the proposed design U-factor can be assumed to be 0.32.

STANDARD DESIGN

The addition alone is modeled the same as newly constructed building.

2.11.3 Existing + Addition + Alteration Approach

Standards §150.2(a)2 and (b)2 contain the provisions for additions and alterations to be modeled by including the existing building in the calculations. This is called the "Existing + Addition + Alteration" (or "E+A+A") performance approach.

The proposed design ~~(energy use)~~, is modeled by ~~with tags or labels that~~ identifying each energy feature as part of the existing building, the addition, or ~~the~~ an alteration. The compliance software uses ~~the tags~~this information to create an E+A+A standard design ~~(energy budget)~~ in accordance with the rules in the standards that take into account whether altered components meet or exceed the threshold at which point they receive a compliance credit and whether any measures are triggered by altering a given component. For example, when replacing or adding an air handler, outdoor condensing unit of a split system, or cooling or heating coil, the prescriptive requirements include duct leakage testing to 15%.

For building surfaces and systems designated below, all compliance software must provide an input field with labels ~~(tags)~~ for the proposed design which define how the standard design requirements are established, based on the option selected by the software user:

- **Existing:** remains unchanged within the proposed design.
- **Altered:** the surface or system is being altered in the proposed design. No verification of existing conditions is performed.
- **Verified and Altered**: the surface or system is being altered in the proposed design and the original condition is verified by a HERS rater.
- **New:** a new surface or system is added in the proposed design (typically part of the addition, but may be in the existing building).

Features being removed are not included in the proposed design.

When the standard design requirements for existing, altered and new are identical for a particular input, this section uses the term "all".

The compliance software user shall indicate that an existing + addition + alteration is being modeled and select the correct tag for each surface or system. Features to be altered must be paired with an existing feature. The compliance documentation shall clearly indicate each tag .

2.11.3.6 Floors

STANDARD DESIGN

The standard design for floors is shown in Table 2-28.

Table 2-28: Standard Design for Raised Floor, Slab-on-Grade and Raised Slab

Proposed Design Floor Type	Standard Design Based on Proposed Floor Status (Tag)			
	ADDITION Addition or New Construction	ALTERED Without 3rd Party Verification	VERIFIED ALTERED With 3rd Party Verification	EXISTING
Raised Floor Over Crawl Space or Over Exterior	R-19 cavity insulation in 2x10 16" o.c. raised floor	R-19 cavity insulation in 2x10 16" o.c. raised floor	If proposed U-factor is <= Altered, standard design = existing raised floor. If proposed U-factor > Altered, standard design = Altered.	Existing Raised Floor over Crawl or Open
Slab-on-Grade: Unheated	CZ1-15: Un-insulated slab edge CZ16: R-7 16" vertical slab edge	Standard design = proposed design	Existing unheated slab-on-grade	
Slab-on-Grade: Heated, Vertical Insulation	CZ1-15: R-5 16" vertical slab edge insulation CZ 16: R-10 16" vertical slab edge insulation	Standard design = proposed design	Existing heated slab-on-grade	
Raised Concrete Slab	CZ1,2,11,13,14,16: R-8 CZ3-10: Un-insulated CZ12,15: R-4	Standard design = proposed design	Existing raised concrete slab	

2.11.3.7 Thermal Mass

STANDARD DESIGN

The standard design for thermal mass in Existing + Addition + Alteration calculations is the same as for all newly constructed buildings as explained in Section 2.5.4.1.

2.11.3.8 Air Leakage and Infiltration

STANDARD DESIGN AIR LEAKAGE AND INFILTRATION

The standard design for space conditioning systems is shown in *Table 2-29*.

Table 2-29: Standard Design for Air Leakage and Infiltration

Proposed Air Leakage and Infiltration	Standard Design Air Leakage Based on Building Type			
	ADDITION Addition or New Construction	ALTERED Without 3rd Party Verification	VERIFIED ALTERED With 3rd Party Verification	EXISTING
Single Family Buildings	5 ACH50	5 ACH50	Diagnostic testing of existing ACH50 value by HERS Rater or 7.0 ACH50, whichever is less	5 ACH50
Multi-Family Buildings	5 ACH50	5 ACH50	5 ACH50	

2.11.3.9 Space Conditioning System

STANDARD DESIGN

The standard design for space conditioning systems is shown in Table 2-30.

Table 2-30: Standard Design for Space Conditioning Systems

Proposed Design Space Conditioning System Type	Standard Design Based on Proposed Space Conditioning Status (Tag)			
	ADDITION Addition or New Construction	ALTERED Without 3rd Party Verification	VERIFIED ALTERED With 3rd Party Verification	EXISTING
Heating System: Compliance 2014	See Section 2.4 based on fuel source and equipment type.	Same as Addition.	Existing heating fuel type, equipment type/efficiency.	
Heating System: Compliance 2015	See Section 2.4 and 2015 Federal Appliance Stds based on fuel source and equipment type.	Same as Addition.	Existing heating fuel type and equipment type/efficiency.	
Cooling System: Compliance 2014	See Section 2.4based on equipment type. CZ2 & CZ8-15: Refrigerant Charge Verification	Same as Addition.	Existing cooling equipment type/efficiency.	
Cooling System: Compliance 2015	See Section 2.4and 2015 Federal Appliance Stds based on equipment type. CZ2 & CZ8-15: Refrigerant Charge Verification	Same as Addition.	Existing cooling equipment type/efficiency.	
Whole House Fan (WHF) applies only if addition > 1,000 ft^2	CZ8-14: Whole House Fan in New Single Family only; 2.0 cfm/sf	Same as Addition.	Existing condition. To count as Existing the WHF must be >= 2.0 cfm/sf and be CEC-rated	

2.11.3.10 Duct System

STANDARD DESIGN

Table 2-31: Standard Design for Duct Systems

Proposed Design Duct System Type	Standard Design Based on Proposed Duct System Status (Tag)			
	ADDITION Addition or New Construction	ALTERED Without 3rd Party Verification	VERIFIED ALTERED With 3rd Party Verification	EXISTING
All	CZ 1-10, 12: Duct insulation R-6 and duct sealing <= 6% CZ 11, 14-16: Duct insulation R-8 and duct sealing <= 6%	Proposed duct R-value and duct leakage of 15%.	Existing duct R-value and duct leakage of 15%.	

Note 1: Refer to section 150.2(b)1Diia for definition of an "**Entirely New or Complete Replacement Duct System**".

APPENDIX A – CERTIFICATION TESTS

The purpose of ACM testing is to demonstrate that candidate software submitted for approval successfully integrates Compliance Manager into the candidate software. This includes testing a variety of both inputs and reporting to ensure that buildings are being accurately modeled under the rules established by the Energy Commission.

A test data set with specific description and details of the tests, inputs, and a spreadsheet of compliance results is available from the Energy Commission to assist vendors in preparing the certification tests. The tests are based on the Energy Commission 2100 ft^2, 2700 ft^2 and 6960 ft^2 new construction prototypes and a 1665 ft^2 addition/alteration prototype generally described in Section ~~A6~~ A5.

A1. Test Data Set

The test data set is maintained by the Energy Commission and made available to vendors. This data consists of:

1. The reference program input files (currently .ribd files) for all runs that describe all inputs for each run.

2. The test data set spreadsheet that describes each test and compares the current reference results to the candidate results to determine if it passes the numeric results test. The results for the reference software will be imported using the AnalysisResults.csv file generated by CBECC-Res reference software. Results for the candidate software may be imported or manually entered.

3. Additional intermediate results and reports for a small subset of runs that is used to demonstrate that the candidate software is capable of completing the entire compliance process of input, run, and reporting. These results will be verified either by visual review or with the use of a file comparison utility program.

A2. Software Vendor Requirements

Candidate software needs to:

1. Secure the latest copy of the test data set from the Energy Commission.

2. Create input files in the candidate software's user interface to match those in the test data set.

3. Run the test data set and load the results into the spreadsheet to verify that the results match.

Table A-2: Two-Story Prototype Description

Component	Description
Ceiling height	9 ft with 1 ft between floors
Conditioned floor area	2700 ft2
Gross areas	
Slab	1250 ft2
Slab perimeter, outside	128 ft
Slab, garage	440 ft2
Slab perimeter, garage	54 ft from garage to outside
Ceiling	1450 ft2, vented attic
Floor over garage	200 ft2
Front wall	~~770~~728 ft2
Front garage wall	180 ft2
Front garage kneewall	~~83~~42 ft2
Left wall	551 ft2
Back wall	950 ft2
Right wall	461 ft2
Right garage wall	90 ft2
Garage front wall	180 ft2 from garage to outside
Garage left wall	108 ft2 from garage to outside
Garage right wall	198 ft2 from garage to outside
Doors	
Front door	20 ft2
Garage door	20 ft2
Garage car door	128 ft2
Overhangs	1 ft (when modeled)

Multifamily Prototype

The multifamily prototype is a 6960 ft^2 eight-unit two-story apartment building consisting of four 780 ft^2 (26 ft wide by 30 ft deep) one-bedroom apartments and four 960 ft^2 (32 ft wide by 30 ft deep) two-bedroom apartments. The units share common walls and either common floors or ceilings. Multiples of this layout may be combined to represent other typical multifamily configurations.

Figure A-8 through Figure A-11 and Table A-3 define the 6960 ft2 prototype.

Note that the glass area and distribution provided on these drawings is only to show a realistic image of the home. Glass area and orientation for impact and cost effectiveness is set using a glass

Figure A-11: Multifamily Prototype Floor Plan – 2nd Floor

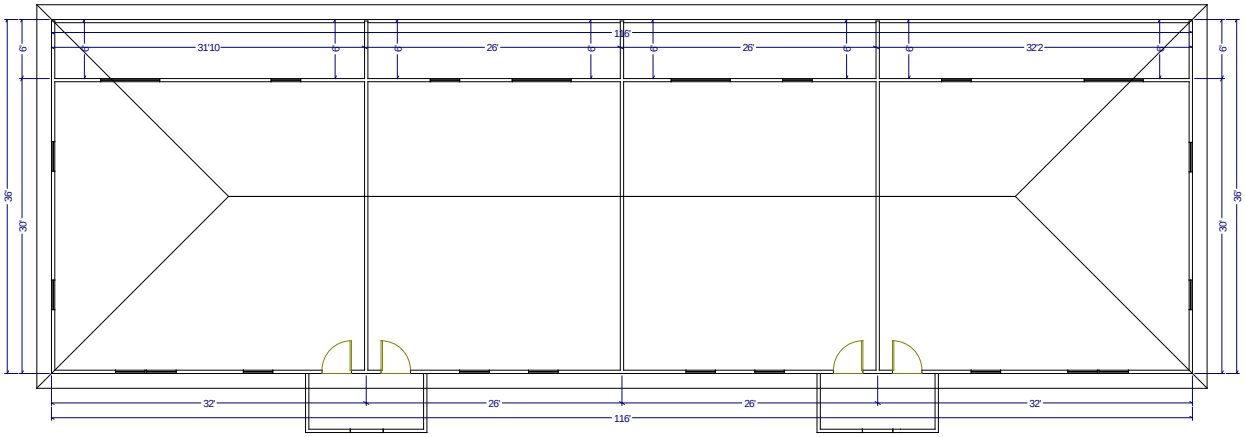

Table A-3: Multifamily Prototype Description

Component	Description
Ceiling height	8 ft with 1 ft between floors
Conditioned floor area	6960 ft2
Dwelling units	8
Gross areas	
Slab	3480 ft2
Slab perimeter, outside	292 ft
Ceiling	3480 ft2, vented attic
Front wall	1972 ft2
Left wall	510 ft2
Back wall	1972 ft2
Right wall	510 ft2
Doors	
Front door	160 ft2
Overhangs	1 ft (when modeled)

Addition/Alteration Prototype

Figure A-12 through Figure A-14 define the addition/alteration 1665 ft2 prototype without the addition. Figure A-15 through Figure A-16 and Table A-4 define the addition/alteration with the addition.

Figure A-12: Addition/Alteration Prototype Front View without Addition

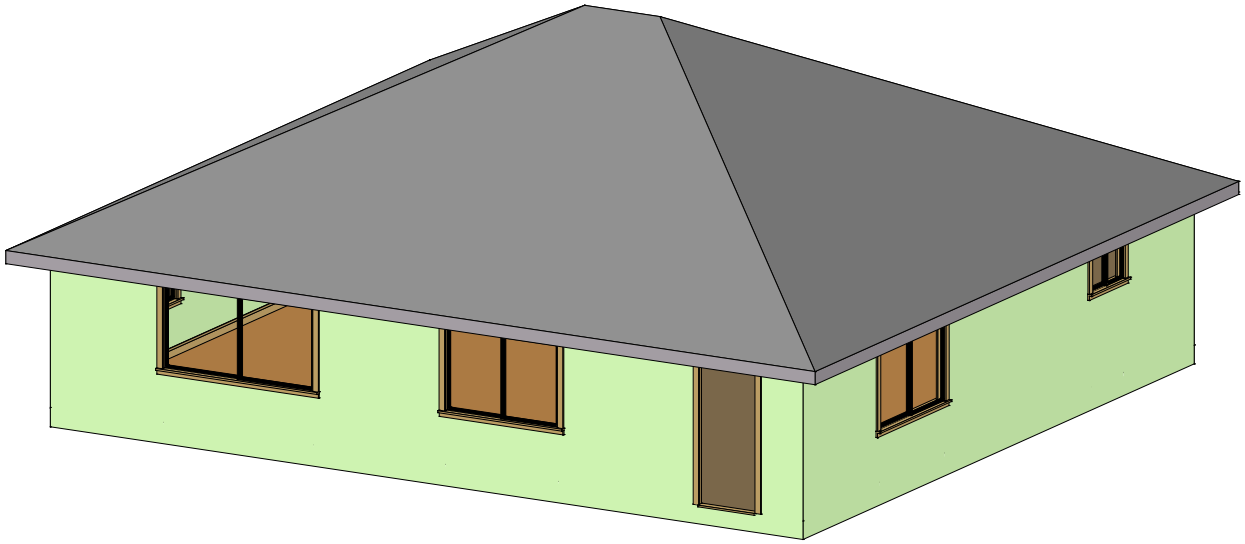

Figure A-13: Addition/Alteration Prototype Back View without Addition

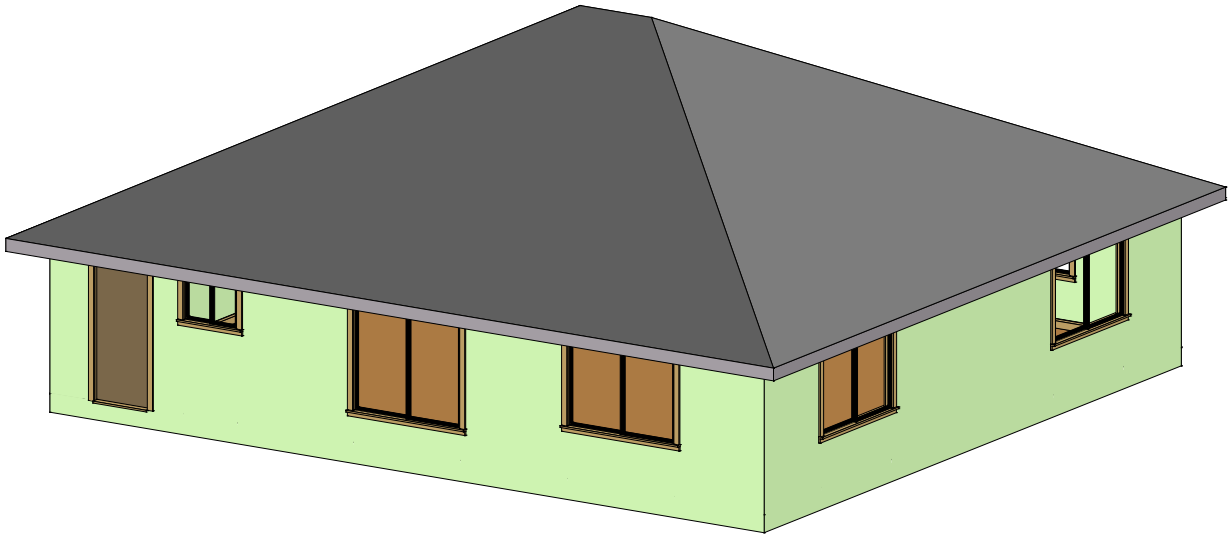

Figure A-14: Addition/Alteration Prototype Floor Plan without Addition

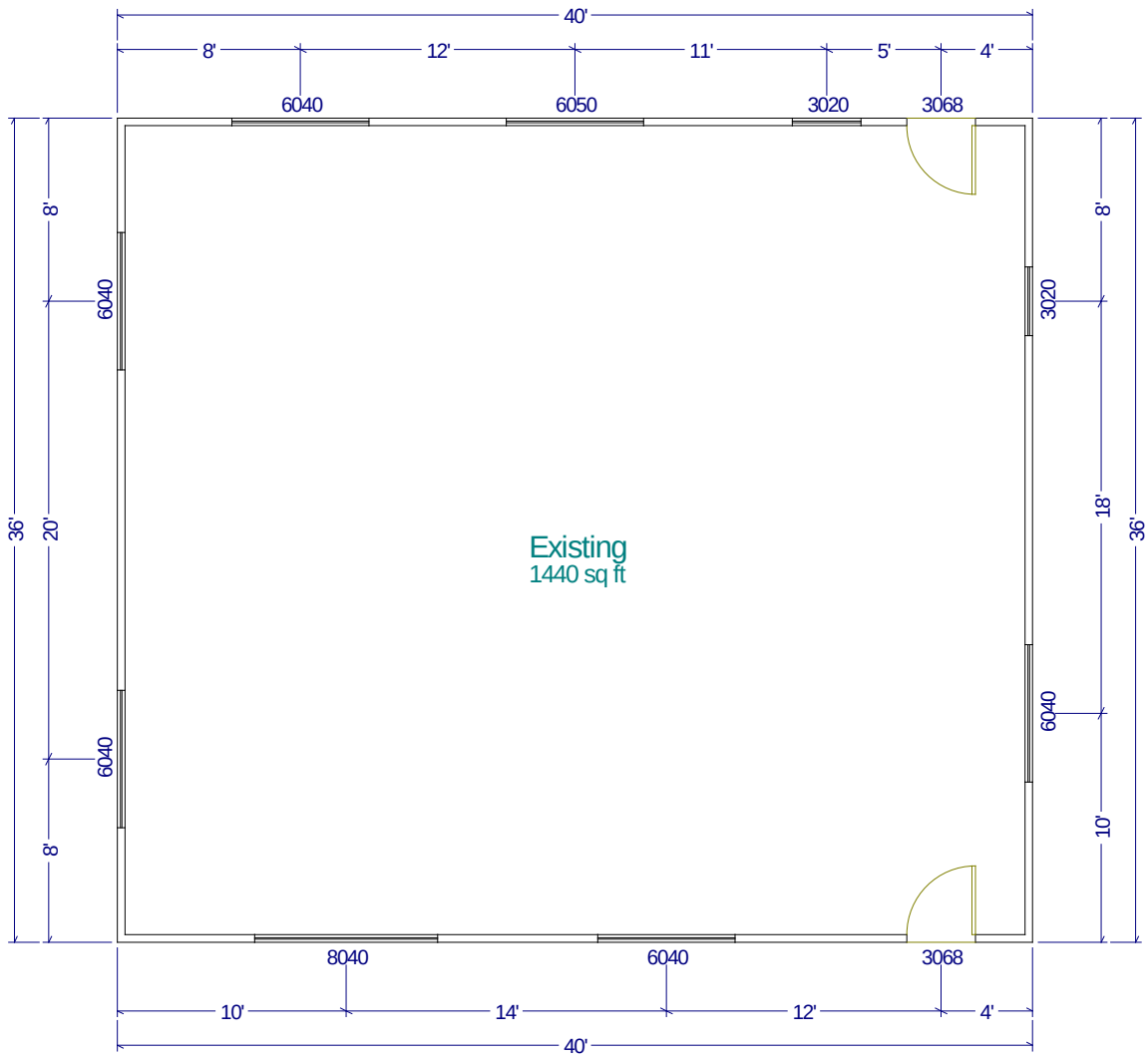

Figure A-15: Addition/Alteration Prototype Back View with Addition

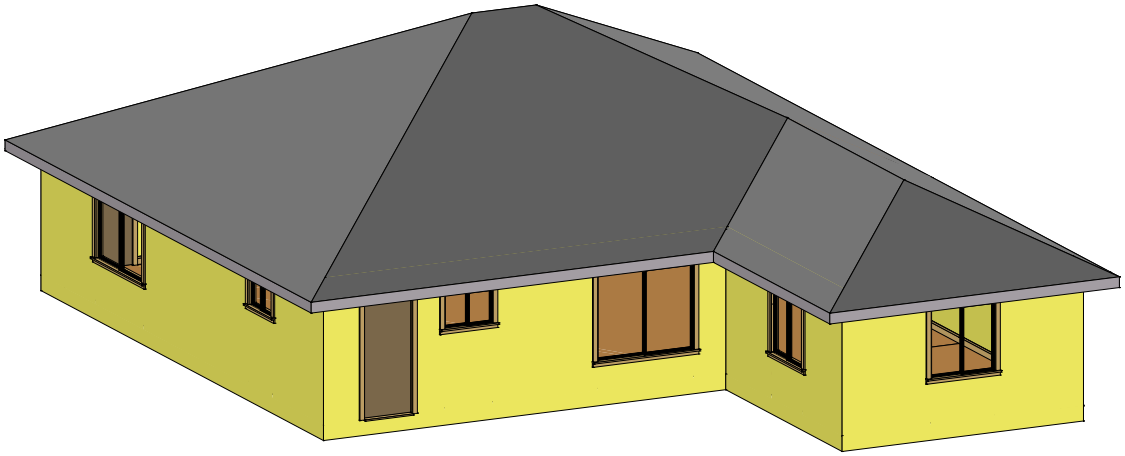

Figure A-16: Addition/Alteration Prototype Floor Plan with Addition

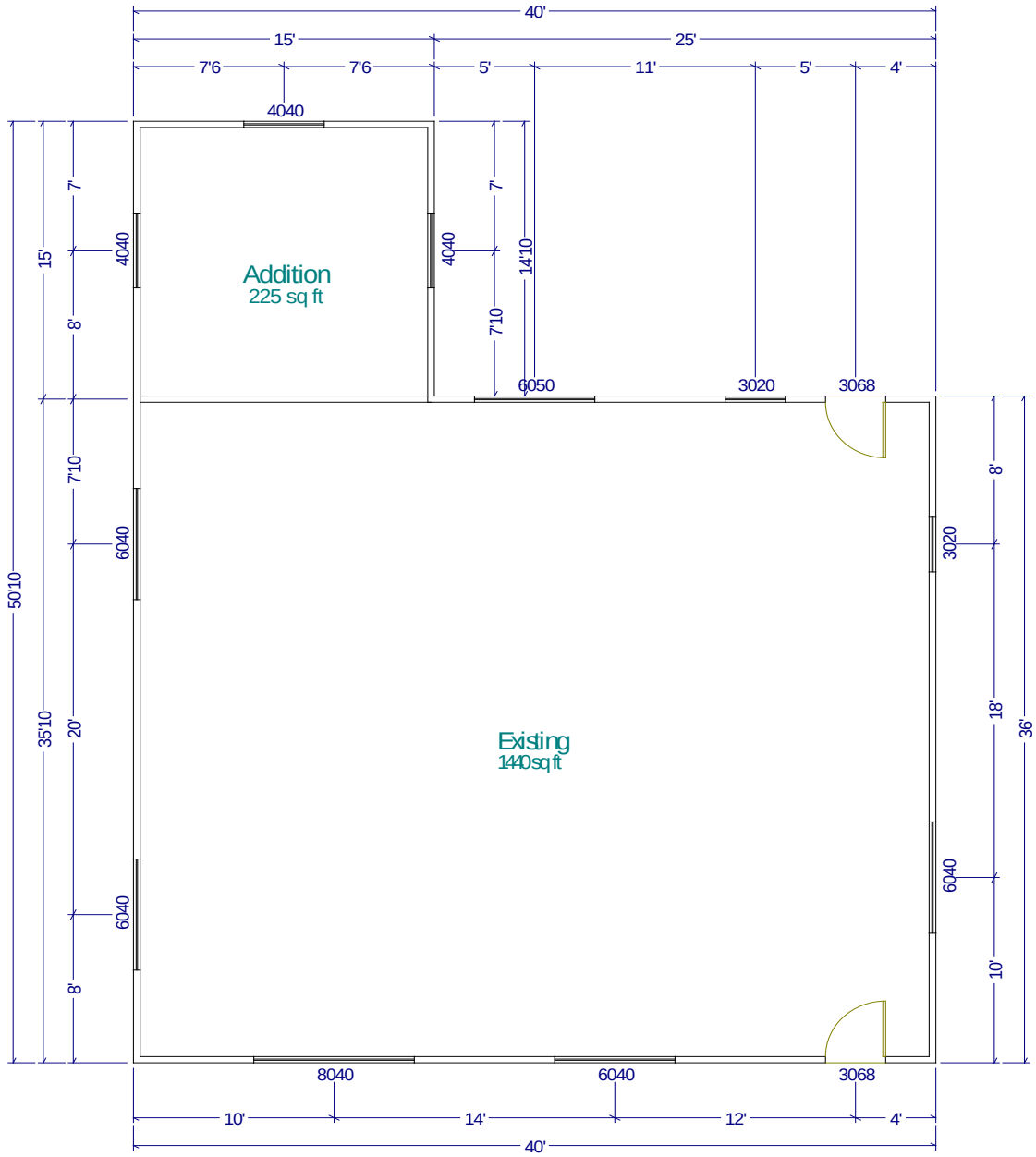

Table A-4: Addition/Alteration Prototype Description

Component	Description
Ceiling height	8 ft
Existing floor area	1440 ft2
Addition floor area	225 ft2
Gross areas	
Existing Slab	1440 ft2
Addition Slab	225 ft2
Exisiting Slab perimeter	137 ft
Addition Slab perimeter	45 ft
Existing Ceiling	1440 ft2, vented attic
Addition Ceiling	225 ft2, vented attic
Existing Front wall	320 ft2
Existing Left wall	288 ft2
Addition Left wall	120 ft2
Existing Back wall	320 ft2
Addition Back wall	120 ft2
Existing Right wall	288 ft2
Addition Right wall	120 ft2
Windows	
Existing Front Window 1	24 ft2
Existing Front Window 2	32 ft2
Existing Left Window 1	24 ft2
Existing Left Window 2	24 ft2
Addition Left Window	16 ft2
Existing Back Window 1	30 ft2
Existing Back Window 2	6 ft2
Addition Back Window	16 ft2
Existing Right Window 1	6 ft2
Existing Right Window 2	24 ft2
Addition Right Window	16 ft2
Doors	
Existing Front door	20 ft2
Existing Back door	20 ft2

APPENDIX C – SPECIAL FEATURES

Measure	*CF1R Documentation Requirement*
GENERAL	
Multiple orientation compliance	Special feature
Controlled-Ventilation Crawlspace (CVC)	Special feature
Photovoltaic (PV) system credit	Special feature
Living and sleeping zones	Special feature
Zonal control	Special feature
ENVELOPE	
Above deck insulation	Special feature
Below deck insulation	Special feature
Building air leakage / reduced infiltration	HERS verification of reported ACH50 value
Cool roof	Special feature
Dynamic glazing	Special feature
Exterior shading device (anything other than standard)	Special feature
Exposed slab area greater than 20%	Special feature
High quality insulation installation (QII) or Improved construction quality	HERS verification
Metal-framed assembly	Special feature
Non-default spray foam insulation R-values	HERS verification
Non-standard construction assembly	Special feature
Non-standard roof deck framing	Special feature
Non-standard wall framing	Special feature
Overhangs and sidefins	Special feature
Radiant barrier	Special feature
Raised heel truss (height above top plate)	Special feature
Spray foam insulation, closed cell >R-5.8/inch	HERS verification

ΔT = Temperature difference (ºF) See equation RE-3

Equation RE-2 calculates the hourly standard end use (HSEU). The heat content of the water delivered at the fixture is the draw volume in gallons (GPH) times the temperature rise ΔT (difference between the cold water inlet temperature and the hot water supply temperature) times the heat required to elevate a gallon of water 1ºF (the 8.345 constant).

Equation RE-3 $$\Delta T = T_s - T_{inlet}$$

Where,

ΔT = Temperature difference between the cold water inlet and the hot water supply (ºF)

T_s = Hot water supply temperature of (ºF). For DHW system type 1, 2, and 3, use 124 ºF. For DHW system type 4, use 130 ºF.

T_{inlet} = The cold water inlet temperature (ºF) is defined in Section E3.3.

Equation RE-3 calculates the temperature difference (ºF) between cold water inlet temperature T_{inlet} and the hot water supply temperature T_s.

Equation RE-4 $$DLM_k = 1 + (SDLM_k - 1) \times DSM_k$$

Where,

DLM_k = Distribution loss multiplier (unitless)

$SDLM_k$ = Standard distribution loss multiplier (unitless). See equation RE-5

DSM_k = Distribution system multiplier (unitless) Equation RE-4 calculates the distribution loss multiplier (DLM) which combines two terms: the standard distribution loss multiplier (SDLM), which depends on the floor area of the dwelling unit and the distribution system multiplier (DSM) listed in Table RE-2~~Table RE-2~~.

~~NCF = Non-Compliance Factor. The factor shall remain 1, unless the system is deemed non-compliant during field inspection, in which case it is 1.2. This factor applies to all non-compliant distribution system types.~~

Equation RE-5 $$SDLM_k = 1.004 + 0.000202 \times CFA_k - 0.0000000231 \times CFA_k \times CFA_k$$

Where,

$SDLM_k$ = Standard distribution loss multiplier (unitless).

CFA_k = Conditioned floor area (ft²) capped at 2500 ft² for all single and multi-family units.

Equation RE-5 calculates the standard distribution loss multiplier (SDLM) for all dwelling units with three stories or less. For situations with one or more water heaters serving a single dwelling unit (System Types 1 or 2), CFA_k is calculated as the total dwelling unit CFA divided by the number of water heaters. For multi-family configurations where multiple dwelling units are served by a central

The full length of the line from the water heater to the kitchen fixtures shall be insulated ~~to a nominal R-4~~in accordance to Section 120.3.

All piping of nominal ¾″ or larger diameter shall be insulated ~~to a nominal R-4~~in accordance to Section 120.3.

For all four system types, values for alternative distribution systems are given in Table RE-2~~Table RE-2~~. Improved DSM values are available for cases where voluntary HERS inspections are completed, as per the eligibility criteria shown in Reference Residential Appendix RA4.4. Detailed descriptions of all of the distribution system measure may be found in Residential Appendix RA 4.4.

Table RE-2 Distribution System Multipliers within a Dwelling Unit with One or More Water Heaters

Distribution System Types	Assigned Distribution System Multiplier	System Type 1and 2	System Type 3 and 4
No HERS Inspection Required			
Trunk and Branch -Standard (STD)	1.0	Yes	Yes
Pipe Insulation (PIC)	0.9	Yes	Yes
Parallel Piping (PP)	1.05	Yes	
~~Insulated and Protected Pipe Below Grsde (IPBC)~~	~~1.4~~	~~Yes~~	
Recirculation: Non-Demand Control Options (R-ND)	9.00~~7.0~~*	Yes	
Recirculation with Manual Demand Control (R-DRmc)	1.6~~1.15~~*	Yes	
Recirculation with Motion Sensor Demand Control (R-DRsc)	2.4~~1.3~~*	Yes	
Optional Cases: HERS Inspection Required		Yes	
Pipe Insulation (PIC-H)	0.8	Yes	Yes
Parallel Piping with 5′ maximum length (PP-H)	0.95	Yes	
Compact Design (CHWDS-H)	0.7	Yes	
Point of Use (POU-H)	0.3	Yes	
Recirculation with Manual Demand Control (R-DRmc-H)	1.45~~1.05~~*	Yes	
Recirculation with Motion Sensor Demand Control (RDRsc-H)	2.2~~1.2~~*	Yes	
Non Compliant Installation Distribution Multiplier	1.2	Yes	Yes
*Recirculation DSMs reflect impact of reduced hot water consumption associated with recirculation systems.			

Where,

$T_{Amb,n}$ = Ambient temperature of section n (°F), which can be outside air, underground, conditioned or semi-conditioned air. Outside air temperatures shall be the dry-bulb temperature from the weather file. Underground temperatures shall be obtained from Table RE-3. Hourly conditioned air temperatures shall be the same as conditioned space temperature. For the proposed design, $T_{Amb,n}$ options shall be based on user input. The standard design assumes all pipes are in conditioned air.

UA_n = Heat loss rate of section n (Btu/hr-°F). See equation RE-15 and RE-16

Equation RE-15 is for standard design with extra 0.5 inch of insulation and Equation RE-16 is for minimum pipe insulation.

Equation RE-15 $$UA_n = \frac{2\pi \cdot Len_n.cond}{12 \cdot ln\left(\frac{Dia_n + 2 \cdot (Thick + 0.5)}{Dia_n}\right)} \cdot f_{UA} \cdot f_{Area}$$

Equation RE-16 $$UA_n = \frac{2\pi \cdot Len_n.cond}{12 \cdot ln\left(\frac{Dia_n + 2 \cdot Thick}{Dia_n}\right)} \cdot f_{UA} \cdot f_{Area}$$

Where,

π = 3.1416

Dia_n = Section n pipe diameter (inch). It is divided by 12 in the above equation to convert the unit from inch to foot. For the proposed design, use user input; for the standard design, see Equation RE-28.

Len_n = Section n pipe length (foot). For the proposed design, use user input; for the standard design, see Equation RE-27.

Thick = Pipe insulation minimum thickness (inch) as defined in the Title 24 Section 120.3~~123~~, TABLE 120.3~~123~~-A for service hot water system.

cond = Insulation conductivity shall be assumed 0.26 (Btu inch/h·sf·F)

f_{UA} = Correction factor to reflect imperfect insulation, insulation material degradation over time, and additional heat transfer through connected branch pipes that is not reflected in branch loss calculation. It is assumed to be 2.0.

f_{area} = The multiplier to adjust proposed design based on pipe surface area validation. See Equation RE-29

Pipe heat loss without water flow shall be calculated according to the following equations:

Equation RE-17 $PLCD_n = Vol_n \cdot \rho \cdot C_p \cdot (T_{Start,n} - T_{End,n})$