Table of Contents

Table of Contents i
6. Outdoor Lighting 1
6.1 Overview 1
6.1.1 Summary of Changes in the 2016 Energy Standards 1
6.1.2 Prescriptive Changes 1
6.1.3 Additions and Alterations Changes 1
6.2 History and Scope 2
6.2.1 History and Background 2
6.2.2 Scope and Application 3
6.3 Mandatory Measures 5
6.3.1 Outdoor Incandescent Lighting 5
6.3.2 Luminaire Cutoff Requirements 6
6.3.3 Controls for Outdoor Lighting 11
6.3.4 Requirements for Lighting Control Functionality 13
6.4 Prescriptive Measures 17
6.4.1 Lighting Zones 17
6.4.2 Outdoor Lighting Power Compliance 22
6.4.3 General Hardscape Lighting Power Allowance 23
6.4.4 Additional Light Power Allowance by Applications 29
6.4.5 Further Discussion about Additional Lighting Power Allowance for Specific Applications 33
6.5 Alterations and Additions for Outdoor Lighting 43
6.6 Outdoor Lighting Compliance Documents 43
6.6.1 Overview 43
6.6.2 Compliance Documentation and Numbering Scheme 43
6.6.3 Certificate of Installation Documents 44
6.6.4 Certificate of Acceptance 44

6. Outdoor Lighting

This chapter covers the Title 24 California Code of Regulations, Part 6 (the Energy Standards), requirements for nonresidential outdoor lighting design and installation, including controls. This chapter applies to all outdoor lighting, whether attached to buildings, poles, structures or self-supporting; including but not limited to hardscape areas including parking lots, lighting for building entrances, sales and non-sales canopies; lighting for all outdoor sales areas; and lighting for building facades. It is addressed primarily to lighting designers, electrical engineers, and enforcement agency personnel responsible for lighting.

Chapter 5 addresses nonresidential indoor lighting requirements.

Chapter 7 addresses sign lighting requirements.

6.1 Overview

6.1.1 Significant Changes in the 2016 Energy Standards

- The values in Tables 140.7-A and 140.7-B of the Energy Standards have been modified to reflect the industry shift to LED lighting as the basis of design.
- Table 140.7-A and 140.7-B of the Energy Standards have an added column for Lighting Zone 0, which is the Lighting Zone designated specifically for undeveloped areas in parks and preserves, where no continuous lighting is intended.
- Table 140.7-A has been modified to incorporate the new requirements of the recently revised Illuminating Energy Society of North America (IES) document RP-20-2014, Parking Lot Lighting Recommended Practice.
- ATM, tunnel, and bridge lighting are no longer listed as exemptions from the LPA calculations.
- The controls requirements have changed, expanding to include lighting in outdoor sales canopies and outdoor sales lots, which were previously exempted from occupancy-based dimming controls requirements.
- An increase of the maximum dimming permitted as part of an active motion-controlled lighting system from 80% to 90%.

6.1.2 Prescriptive Changes

The general hardscape power allowances have been updated for all Lighting Zones (LZ), including a new lighting zone (LZ0). The additional lighting power allowances for specific applications have been updated for building entrances and exits. ATM machine lighting and tunnels are newly added to Table 140.7-B in the 2016 Energy Standards update.

6.1.3 Additions and Alterations Changes

RESERVED.

6.2 History and Scope

The outdoor lighting requirements within the Energy Standards conserve energy, reduce winter peak electric demand, and are both technically feasible and cost effective. They set minimum control requirements, maximum allowable power levels, minimum efficacy requirements, and cutoff (uplight and glare) zonal lumen limits for large luminaires.

The lighting power allowances are based on current Illuminating Engineering Society of North America (IES) recommendations for the quantity and design parameters of illumination, current industry practices, and efficient sources and equipment that are readily available. Data indicates that the IES recommendations provide more than adequate illumination, based on a 2002 baseline survey of outdoor lighting practice in California that showed that the majority of outdoor lighting illuminates at substantially lower levels than IES recommendations.[1]

The Energy Standards do not allow trade-offs between outdoor lighting power allowances and indoor lighting, sign lighting, HVAC, building envelope, or water heating (§140.1 and 140.7).

Lighting in unconditioned buildings (including parking garages) is addressed in Chapter 5.

6.2.1 History and Background

In response to the 2000 electricity crisis, the legislature charged the Energy Commission to develop outdoor lighting standards that are both technologically feasible and cost-effective. The intent of the legislature was that the Energy Standards would provide ongoing reliability to the electricity system and reduce energy consumption.

Regulations for lighting have been on the books in California since 1977, but have only addressed indoor lighting through control requirements and maximum allowable lighting power. In 2005 Standards the scope was expanded to include outdoor lighting applications as well as indoor applications in unconditioned buildings.

Outdoor lighting power densities are structured using a layered lighting approach. With the layered approach, the first layer of allowed lighting power is general hardscape for the entire site. After the allowed lighting power has been determined for this first layer, additional layers of lighting power are allowed for specific applications when they occur on the site. For example, the total allowed power for a sales lot with frontage is determined by layering the General Hardscape, Outdoor Sales Lot and Outdoor Sales Lot Frontage allowances, with specific restrictions associated with the location of the power used for frontage and sales lot lighting.

[1] Integrated Energy Systems Productivity and Building Science, Outdoor Lighting Baseline Assessment, New Buildings Institute, August 12, 2002

Figure 6-1 –Concept of a layered lighting approach for outdoor lighting - Lighting Power Allowance (LPA)

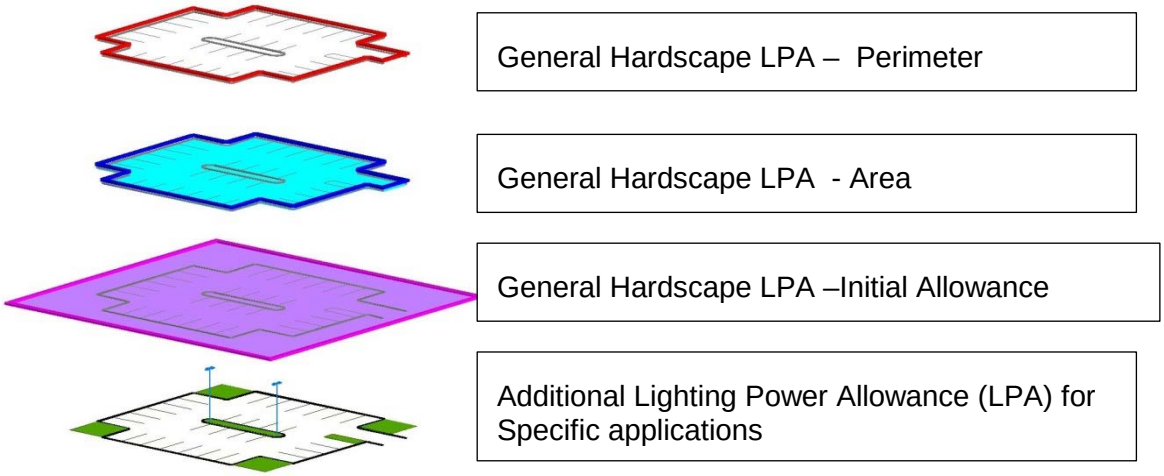

6.2.2 Scope and Application

The outdoor lighting applications that are addressed by the Energy Standards are shown in the first two columns of Table 6-1. The first column is general site illumination applications, which allow trade-offs within the outdoor portion only. The second column is specific outdoor lighting applications, which do not allow trade-offs, and are considered “use it or lose it”. The lighting applications in the third column are not regulated. The Energy Standards include control requirements as well as limits on installed lighting power.

All Section (§) and Table references in this Chapter refer to sections and Tables contained in the Energy Standards or California Energy Code.

6.2.2.1 Trade-offs

The Energy Standards do not allow trade-offs between outdoor lighting power allowances and indoor lighting, sign lighting, HVAC, building envelope, or water heating [(§140.7(a)].

There is only one type of trade-off permitted for outdoor lighting power. Allowed lighting power determined according to §140.7(d)1 for general hardscape lighting may be traded to specific applications in §140.7(d)2, provided the luminaires used to determine the illuminated area are installed as designed. This means that if luminaires used to determine the total illuminated area are removed from the design, resulting in a smaller illuminated area, then the general hardscape lighting power allowance must also be reduced accordingly.

Allowed lighting power for specific applications shall not be traded between specific applications, or to hardscape lighting in §140.7(d)1. This means that for each and every specific application, the allowed lighting power is the smaller of the allowed power determined for that specific application according to §140.7(d)2, or the actual installed lighting power that is used in that specific application. These additional power allowances are “use it or lose it” allowances.

Table 6-1 – Scope of the Outdoor Lighting Requirements

Lighting Applications Covered		Lighting Applications Not Regulated (only as detailed in §140.7)
General Hardscape (trade-offs permitted)	**Specific Applications (trade-offs not permitted)**	
The general hardscape area of a site shall include parking lot(s), roadway(s), driveway(s), sidewalk(s), walkway(s), bikeway(s), plaza(s), bridge(s), tunnel(s) and other improved area(s) that are illuminated.	Canopies: Sales and Non-sales Drive-Up Windows Emergency Vehicle Facilities Building Entrances or Exits Building Facades Guard Stations Hardscape Ornamental Lighting Outdoor Dining Primary Entrances for Senior Care Facilities, Police Stations, Hospitals, Fire Stations, and Emergency Vehicle Facilities Outdoor Sales Frontage and Lots Special Security Lighting for Retail Parking and Pedestrian Hardscape Student Pick-up/Drop-off zone Vehicle Service Station: Canopies, Hardscape, and Uncovered Fuel Dispenser ATM Machine Lighting	Temporary Required & regulated by FAA Required & regulated by the Coast Guard. For public streets, roadways, highways, and traffic signage lighting, and occurring in the public right-of-way For sports and athletic fields, and children's playground For industrial sites For public monuments Signs regulated by §130.3 and §140.8 For stairs, wheelchair elevator lifts For ramps that are other than parking garage ramps Landscape lighting For themes and special effects in theme parks For outdoor theatrical and other outdoor live performances For qualified historic buildings
Other outdoor lighting applications that are not included in Energy Standards Tables 140.7-A or 140.7-B are assumed to be not regulated by these Standards. This includes decorative gas lighting and emergency lighting powered by an emergency source as defined by the California Electrical Code. The text in the above list of lighting applications that are not regulated has been shortened for brevity. Please see Section 6.2.2.2 for details about lighting applications not regulated.		

6.2.2.2 Outdoor Lighting Applications Not Regulated by §140.7

When a luminaire is installed only to illuminate one or more of the following applications, the lighting power for that luminaire shall be exempt from §140.7(a). The Energy Standards clarify that at least 50 percent of the light from the luminaire must fall within an application to qualify as being installed for that application.

- Temporary outdoor lighting.

  Temporary Lighting is defined in §100.1 as a lighting installation with plug-in connections that does not persist beyond 60 consecutive days or more than 120 days per year.

- Lighting required and regulated by the Federal Aviation Administration and the Coast Guard.
- Lighting for public streets, roadways, highways, and traffic signage lighting, including lighting for driveway entrances occurring in the public right-of-way.
- Lighting for sports and athletic fields, and children's playground.
- Lighting for industrial sites, including but not limited to, rail yards, maritime shipyards and docks, piers and marinas, chemical and petroleum processing plants, and aviation facilities.

- Lighting of public monuments.
- Lighting of signs. Signs shall meet the requirements of §130.3 and 140.8.
- Lighting of stairs, wheelchair elevator lifts for American with Disabilities Act (ADA) compliance, and ramps that are other than parking garage ramps.
- Landscape lighting.

  Landscape lighting is defined in §100.1 as lighting that is recessed into or mounted on the ground, paving, or raised deck, which is mounted less than 42 inches above grade or mounted onto trees or trellises, and that is intended to be aimed only at landscape features. Lighting installed for a purpose other than landscape, such as walkway lighting, shall not be considered exempt landscape lighting if only incidental lighting from the walkway luminaires happens to spill onto the landscape.
- In theme parks: outdoor lighting only for themes and special effects. However, all non-theme lighting, such as area lighting for a parking lot, shall not be considered theme lighting, even if the area luminaires are mounted on the same poles as the theme lighting.
- Lighting for outdoor theatrical and other outdoor live performances, provided that these lighting systems are additions to area lighting systems and are controlled by a multi-scene or theatrical cross-fade control station accessible only to authorized operators.
- Outdoor lighting systems for qualified historic buildings, as defined in the California Historic Building Code (Title 24, Part 8), if they consist solely of historic lighting components or replicas of historic lighting components. If lighting systems for qualified historic buildings contain some historic lighting components or replicas of historic components, combined with other lighting components, only those historic or historic replica components are exempt. All other outdoor lighting systems for qualified historic buildings shall comply with §140.7.

6.3 Mandatory Measures

The mandatory features and devices must be included in all outdoor lighting projects when they are applicable. These features have been proven to be cost-effective over a wide range of outdoor lighting applications.

Mandatory measures for outdoor lighting and signs are specified in §110.9, §130.0, and §130.2. These are similar to the mandatory measures for indoor lighting. Even if the design has errors and has specified incorrect features and devices, the installer is responsible to meet all of the applicable requirements that he or she installs. The installer is also required to sign the appropriate Installation Certificate to verify correct installation.

6.3.1 Outdoor Incandescent Lighting

All outdoor incandescent luminaires rated over 100 W must be controlled by a motion sensor. The ability or intent to use a lower wattage is not relevant to the labelled wattage of the luminaire, which is the ultimate determining factor.

Example 6-1 Motion Sensors for Incandescent Lamps

Question

I am installing outdoor luminaires with screw-based sockets and I intend to use 60W incandescent lamps. The luminaire has a label on it that indicates that the maximum rated wattage is 75 watts. Am I required to put these luminaires on motion sensors?

Answer

It depends on the maximum relamping rated wattage of the luminaires, not on the wattage of the lamps that are used for incandescent luminaires with screw-based sockets. If the maximum relamping rated wattage of a screw-based luminaire as listed on a permanent factory-installed label is less than or equal to 100 W, then motion sensors are not required. However, if the maximum relamping rated wattage of the luminaire, as listed on permanent factory-installed labels is more than 100 W, or if the luminaire is not labeled, then motion sensors are required. This luminaire is rated below 100 watts, and therefore is not required to be connected to a motion sensor.

Example 6-2 Motion Sensors for Incandescent Lamps

Question

I am installing outdoor luminaires with screw-based sockets and I intend to use 60W incandescent lamps. There are three lamps per luminaire, and the rated lamp wattage per socket is 75 watts. Am I required to put these luminaires on motion sensors?

Answer

For incandescent luminaires with screw-based sockets it depends on the maximum relamping rated wattage of the luminaires, not on the wattage of the lamps that are used. If the maximum combined relamping rated wattage of a screw-based luminaire as listed on a permanent factory-installed label is less than or equal to 100 W, then motion sensors are not required. However, this luminaire has three lamps rated for a combined wattage of 225 watts, therefore motion sensors are required.

6.3.2 Luminaire Cutoff Requirements

§130.2(b)

All outdoor luminaires rated for use with lamps greater than 150 lamp watts must comply with Backlight, Uplight, and Glare (collectively referred to as "BUG") requirements as follows:

1. There are no Backlight requirements in the Energy Standards.
2. Maximum zonal lumens for Uplight shall be in accordance with Table 6.2-A.
3. Maximum zonal lumens for Glare shall be in accordance with Table 6.2-B.

Note: Title 24, Part 11, Section 5.106.8 includes additional restrictions on backlight, uplight and glare that may apply.

Table 6.2-A - Uplight Ratings (Maximum Zonal Lumens)

Secondary Solid Angle	Maximum Zonal Lumens per Outdoor Lighting Zone				
	LZ0	LZ 1	LZ 2	LZ 3	LZ 4
Uplight High (UH) 100 to 180 degrees	0	10	50	500	1,000
Uplight Low (UL) 90 to <100 degrees	0	10	50	500	1,000

Table 6.2-B - Glare Ratings (Maximum Zonal Lumens)

	Glare Rating for Asymmetrical Luminaire Types (Type 1, Type II, Type III, Type IV)				
Secondary Solid Angle		**Maximum Zonal Lumens per Outdoor Lighting Zone**			
	LZ 0	LZ 1	LZ 2	LZ 3	LZ 4
Forward Very High (FVH) 80 to 90 degrees	10	100	225	500	750
Backlight Very High (BVH) 80 to 90 degrees	10	100	225	500	750
Forward High (FH) 60 to <80 degrees	660	1,800	5,000	7,500	12,000
Backlight High (BH) 60 to <80 degrees	110	500	1,000	2,500	5,000
	Glare Rating for Quadrilateral Symmetrical Luminaire Types (Type V, Type V Square)				
Secondary Solid Angle		**Maximum Zonal Lumens per Outdoor Lighting Zone**			
	LZ 0	LZ 1	LZ 2	LZ 3	LZ 4
Forward Very High (FVH) 80 to 90 degrees	10	100	225	500	750
Backlight Very High (BVH) 80 to 90 degrees	10	100	225	500	750
Forward High (FH) 60 to <80 degrees	660	1,800	5,000	7,500	12,000
Backlight High (BH) 60 to <80 degrees	660	1,800	5,000	7,500	12,000

Outdoor luminaires that use lamps or light sources rated greater than 150 W in the following areas are required to comply with uplight and glare zonal lumen limits specified in Tables 6.2-A and B:

- Hardscape areas, including parking lots and service stations hardscape
- Building entrances
- All sales and non-sales canopies
- Outdoor dining
- All outdoor sales areas

Uplight and glare zonal lumen limits are not considered for outdoor luminaires when they are used to illuminate the following:

- Signs
- Lighting for building facades, public monuments, statues, and vertical surfaces of bridges
- Lighting required by a health or life safety statute, ordinance, or regulation that may fail to meet the uplight and glare limits due to application limitations
- Temporary outdoor lighting as defined by §100.1

- Replacement of existing pole mounted luminaires in hardscape areas meeting all of the following conditions:
  - Where the existing luminaire does not meet the luminaire uplight and glare zonal lumen limits.
  - Spacing between existing poles is greater than 6 times the mounting height of the existing luminaires.
  - Where no additional poles are being added to the site.
  - Where new wiring to the luminaires is not being installed.
  - Provided that the connected lighting power wattage is not increased.

IES published the technical memorandum *'Luminaire Classification for Outdoor Luminaires'* in 2011 (TM-15-11). This document defines three-dimensional regions of analysis for exterior luminaires and further establishes zonal lumen limits for these regions as part of a larger method of categorizing outdoor lighting equipment into Backlight, Uplight, and Glare components. Collectively, the three components are referred to as the BUG system.

The zonal lumen limits per secondary solid angles for uplight and glare are based upon the methodology found in TM-15. The Lighting Zone that the project is located in determines the maximum zonal lumens for both uplight and glare. There are no separate zonal lumen limits for the Backlight component in the Energy Standards, regardless of the lighting zone. This component is intended for property boundary conditions and is intended to help determine the suitability of specific products to mitigate light trespass, and is therefore outside the prevue of Title 24.

To comply with this mandatory measure, the luminaire must not exceed the maximum zonal lumen limits for each secondary solid angle region (within both the Uplight and Glare component) per lighting zone. The zonal lumen values in a photometric test report must include any tilt or other non-level mounting condition of the installed luminaire.

The BUG rating for luminaires may be determined with outdoor lighting software or by contacting the manufacturer. There is also software available to produce a BUG rating for a tilted luminaire condition (which is not a typical circumstance for most applications). Since the California BUG limits and calculation procedures match the IES, no deviation from the IES BUG rating is necessary.

Example 6-3 Backlight Zonal Lumen Limits

Question

I am installing four 200W luminaires. What are the maximum zonal lumen limits for Backlight that I have to meet?

Answer

You will need to comply with the zonal lumen limits for each solid angle zone found within the Uplight and Glare components only (the U and G portions of the BUG rating) and the Energy Standards does not have backlight requirements. Note that within the Glare component, there are two solid angle zones that include some backwards propagating light portions. This is built into the zonal lumen limits, and if the U and G ratings meet the Lighting Zone, then no further consideration is necessary.

Example 6-4 Obtaining Zonal Lumen Limits

Question

How are luminaire zonal lumen limits obtained?

Answer

The zonal lumen values for a particular luminaire, lamping and orientation are obtained from the manufacturer or may be calculated from photometric data. In the Code, Tables 130.2-A and 130.2-B list the maximum zonal lumens allowed in each solid angle zone within the Uplight and Glare categories. If the zonal lumens in any solid angle zone is exceeded in any category, the uplight or glare rating moves into a higher outdoor lighting zone.

For instance, an example photometric report indicates the following for a Type III luminaire:

Uplight Zonal Lumins
UH: 135.4 UL: 74.9

Glare Zonal Lumins
FVH: 104.3 BVH: 65.2 FH: 1935.7 BH: 440.8

Referring to Table 130.2-A, the luminaire is only acceptable for use in LZ3 or higher because both the UH and UL zonal lumen values are below 500 lumens, but greater than 50 lumens.

Comparing the glare zonal lumen values to Table 130.2-B for Type III luminaires, this luminaire is only acceptable for use in LZ2 or higher. Even though there are some angles that are less than the maximum zonal lumen limits, the FVH value moves this luminaire up to LZ2.

The final result is the larger of the two ratings. Therefore, combining both Uplight (LZ2) and Glare (LZ3), this luminaire can only be used in LZ3 or higher applications.

Example 6-5 Zonal Lumen Limits by Lighting Zone

Question

Do Uplight and Glare zonal lumen limits vary in the regulations?

Answer

Yes, they vary depending on lighting zone. Outdoor Lighting Zone 1 has more stringent zonal lumen requirements than Outdoor Lighting Zone 2. Refer to Table 130.2-A and 130.2-B in the Energy Standards for the zonal lumen maximums for each particular Lighting Zone.

Example 6-6 Zonal Lumen Limits for Luminaires in a Rail Yard

Question

Am I required to meet the uplight and glare zonal lumen limits for luminaires in a rail yard?

Answer

No, only luminaires in areas such as hardscape areas, building entrances, canopies, or outdoor sales areas are required to meet the uplight and glare zonal lumen limits. However, in this example, the parking lot for the employees outside the rail yard must meet the uplight and glare zonal lumen limits.

Example 6-7 Full Cut-Off Luminaires and Zonal Lumen Limits

Question

Can full cut-off luminaires be used to meet the zonal lumen limits of the Energy Standards?

Answer

Luminaires using light sources of 150W or greater, including full cut-off luminaires, must meet the Uplight zonal lumen limits in Table 130.2-A to meet the requirements of this section. Fully shielded luminaires have superior optics that can very effectively reduce or eliminate disability and discomfort glare, and other negative impacts of high intensity unshielded lighting. However, a traditional “full cut-off” style luminaire is not assured to meet the Uplight and Glare zonal lumen limits of Table 130.2-B, so verification will be required.

Example 6-8 Wallpacks and Zonal Lumen Limits

Question

A new parking lot adjacent to a building is being designed to be illuminated by 250W wall packs mounted on the side of the building. Do these wall packs have to meet the zonal lumen limits? The wall packs are also illuminating the façade of the building, but their main purpose is for parking lot illumination.

Answer

Yes, these 250W wall packs will have to meet the zonal lumen limits because their main purpose is for parking lot illumination. Luminaire mounting methods or locations do not necessarily determine the purpose of the illumination. Define the function of the luminaire by determining what the majority of the light is striking. In the case a typical wallpack, 80% or more of the light is likely striking the parking lot or sidewalk in front of the building, and only 20% or less on the façade, so this will be required for verification of the zonal limits.

Each luminaire must be appropriately assigned to the function area that it is illuminating, whether it is mounted to a pole, building, or other structure. Only luminaires that are 150W or less are not required to meet the Uplight and Glare limits in the Energy Standards.

Example 6-9 Wallpacks and Zonal Lumen Limits

Question

Can we use 250W, non-cut-off wall packs for building façade lighting?

Answer

Even though façade lighting is exempt from the zonal lumen limits, you cannot consider a traditional – wall pack installation as façade lighting because most of the light from these luminaires will not illuminate the façade to which they are attached. Most ‘wall pack’ style luminaires do not direct the majority of the light exiting the luminaire onto the façade. Only wall packs that are 150W or less are not required to meet the Uplight and Glare limits in the Energy Standards.

Example 6-10 Cut-Off Luminaires and Zonal Lumen Limits

Question

If a cut-off or full cut-off luminaire is mounted at a tilt does it still meet the zonal lumen limits?

Answer

It depends. Luminaires that meet the zonal lumen limits when mounted at 90° to nadir may or may not comply with the zonal lumen limits when they are mounted at a tilt. In order for a tilted luminaire to meet this requirement a photometric test report must be provided showing that the luminaire meets the zonal lumen limits at the proposed tilt, or other non-level mounting condition. This can be provided by the manufacturer or calculated by various lighting calculation software products available in the industry. A test will be required for each unique tilt situation (as the tilt angle changes, the BUG rating will also change).

6.3.3 Controls for Outdoor Lighting

§130.2(c)

Outdoor lighting controls shall be installed that meet the following requirements as applicable.

Controls are not required for outdoor lighting when a health or life safety statute, ordinance, or regulation does not permit the lighting to be turned OFF. Controls are also not required for lighting in tunnels required to be illuminated 24 hours per day and 365 days per year.

A. Automatic Shutoff Controls

§130.2(c) 1

All installed outdoor lighting must be controlled by a photocontrol or outdoor astronomical time-switch controls that automatically turns off the outdoor lighting when daylight is available. Also note for the automatic scheduling controls requirement for outdoor lighting to be turned off for a portion of the night and the day.

B. Independent Control

§130.2(c) 2

All installed outdoor lighting shall be independently controlled from other electrical loads by a time-based lighting control device or system that is capable of being programmed to turn off outdoor luminaires for a portion of the night and the day.

Example 6-11 Circuiting of Irrigation Controllers

Question

Can irrigation controllers be on the same circuit as lighting?

Answer

Yes, it is allowed but, if there is any outdoor lighting load on the circuit, the outdoor lighting load must be separately controlled from all other loads.

C. Controls for Luminaires Mounted below 24 Feet

§130.2(c) 3

All installed outdoor lighting, where the bottom of the luminaire is mounted 24 feet or less above the ground, shall be controlled with automatic lighting controls that meet all of the following requirements:

1. Include motion sensors or other lighting control systems that automatically control lighting in response to the area being vacated of occupants.
2. Be capable of automatically reducing the lighting power of each luminaire by at least 40 percent but not exceeding 90 percent, or provide continuous dimming through a range that includes 40 percent through 90 percent.
3. Employ auto-ON functionality when the area becomes occupied.
4. Ensure that no more than 1,500 watts of lighting power are controlled together.

This requires that lower wattage lighting mounted on shorter poles, be controlled to dim back during the time that the space is 'open for business', but does not have occupants present. An example might be a plaza on an office building, or an outdoor retail space.

The lighting may also have a time switch (time-based control) or other scheduling device so that the lighting will be turned off during the after-hours period. These may be combined into a single intelligent device, but it may also be accomplished through the use of two separate control mechanisms.

The lighting controller and lighting equipment as a system must be capable of dimming the lighting back from full power to a reduced power level that represents at least a 40% reduction, and at most a 90% reduction. This requirement does not insist that every lamp be capable of this setback, but that the luminaire is capable. The intent is that the lighting maintains a reasonable uniformity compared to the original design rather than employing a 'checker board' approach to meet the power reduction requirement.

The 1500 watt limit is intended to keep the size of the lighting zones small enough to ensure that the lighting will be setback enough to make the lighting controls cost effective.

However, not all lighting must be controlled in this manner. For the following applications, the motion controls requirements for outdoor luminaires mounted less than 24 feet above the ground are not mandatory, as discussed in greater detail below:

- Lighting for Outdoor Sales Frontage
- Lighting for Building Facades, Ornamental Hardscape and Outdoor Dining
- Outdoor lighting which meets one of the following conditions: pole mounted luminaires with a maximum rated wattage of 75 watts, non-pole mounted luminaires with a maximum rated wattage of 30 watts each, or linear lighting with a maximum wattage of 4 watts per linear foot of luminaire.

D. Application Specific Controls

§130.2(c) 4 & §130.2(c) 5

For Outdoor Sales Frontage lighting, an automatic lighting control shall be installed that meets the following requirements:

- A part-night outdoor lighting control to permit the lighting to be activated at sunset, and be programmed to turned OFF at some point in the night after the business has closed,

OR:

- Motion sensors capable of automatically reducing lighting power by at least 40 percent but not exceeding 90 percent, and which have auto-ON functionality.

Note that Sales Frontage lighting does not typically have an area where a motion sensor can be employed to create a viable occupancy-based control. This is the primary reason that this area is exempted from §130.2(c)3, and this alternate approach be employed. This area is still required to meet requirements for Automatic Shutoff Controls, and Automatic Scheduling Controls.

For Building Façade, Ornamental Hardscape and Outdoor Dining applications, an automatic lighting control shall be installed that meets one or more of the following requirements.

- A part-night outdoor lighting control as defined in §100.1.
- Motion sensors capable of automatically reducing lighting power by at least 40 percent but not exceeding 90 percent, and which have auto-ON functionality.

- A centralized time-based zone lighting control capable of automatically reducing lighting power by at least 50 percent.

These requirements essentially add part-night control and centralized lighting control options in addition to the occupancy-based control option. Some of these applications are done because occupancy-based control is not viable for these applications (façade and ornamental are examples of this), and others because it may be disturbing to the mood or the visual impact may be undesirable when lighting is changing. These areas are still required to employ the Automatic Shutoff Control from §130.2(c)1.

Note that outdoor wall mounted luminaires (often called 'wallpacks') where the bottom of the luminaire is mounted 24 feet or less above the ground must also be controlled by a motion sensor capable of shutting off between 40% and 90% of the load, as required by §130.2(c)3. The point of including this is to direct the reader to the appropriate section for that luminaire type, as this is a common misapplication of the Code.

Example 6-12 Mandatory Outdoor Requirements

Question

What are the mandatory outdoor lighting requirements?

Answer

The mandatory outdoor lighting requirements include:

• Motion sensing for incandescent luminaires rated over 100 watts

• BUG Uplight and Glare zonal lumen limits for luminaires ratings greater than 150 watts unless excluded by the code.

• Automatic controls to turn lighting OFF when daylight is available

• Separate circuiting and independently controlled from other electrical loads by an automatic scheduling control

• Motion sensing devices for luminaires mounted below 24 feet above ground that automatically reduce the lighting power of each luminaire by at least 40 percent, but not greater than 90 percent, auto-ON functionality when the area becomes occupied and no more than 1500 watts of lighting power on a single control zone.

• Outdoor Sales Frontage lighting shall have a part-night outdoor lighting control or motion sensors capable of automatically reducing lighting power by at least 40 percent but not exceeding 90 percent.

• Building Façade, Ornamental Hardscape, and Outdoor Dining shall have a part-night outdoor lighting control or motion sensors capable of automatically reducing lighting power by at least 40 percent but not exceeding 90 percent, or a centralized time-based zone lighting control capable of automatically reducing lighting power by at least 50 percent.

All lighting controls must meet the requirements of §110.9.

6.3.4 Requirements for Lighting Control Functionality

§110.9(b)

All Installed Lighting Control Systems listed in §110.9(b) shall comply with the requirements listed below; and all components of the system considered together as installed shall meet all applicable requirements for the application for which they are installed as required in §130.0 through §130.5, §140.6 through §140.8, §141.0, and §150.0(k).

A. **Time-Switch Lighting Controls**

1. Automatic Time-Switch Controls shall meet all requirements for Automatic Time Switch Control devices in the Title 20 Appliance Efficiency Regulations.
2. Astronomical Time-Switch Controls shall meet all requirements for Astronomical Time-Switch Control devices in the Title 20 Appliance Efficiency Regulations.
3. Multi-Level Astronomical Time-Switch Controls, in addition to meeting all of the requirements for Astronomical Time-Switch Controls, shall include at least 2 separately programmable steps per zone.
4. Outdoor Astronomical Time-Switch Controls, in addition to meeting all of the requirements for Astronomical Time-Switch Controls, shall have setback functions that allow the lighting on each controlled channel to be switched or dimmed to lower levels. The setback functions shall be capable of being programmed by the user for at least one specific time of day.

B. **Daylighting Controls**

1. Automatic Daylight Controls shall meet all requirements for Automatic Daylight Control devices in the Title 20 Appliance Efficiency Regulations.
2. Photo Controls shall meet all requirements for Photo Control devices in the Title 20 Appliance Efficiency Regulations.

C. **Dimmers** shall meet all requirements for Dimmer Control devices in the Title 20 Appliance Efficiency Regulations.

D. **Occupant Sensing Controls:** Occupant, Motion, and Vacancy Sensor Controls shall meet the following requirements:

1. Occupant Sensors shall meet all applicable requirements for Occupant Sensor Control devices in the Title 20 Appliance Efficiency Regulations.
2. Motion Sensors shall meet all applicable requirements for Motion Sensor Controls devices in the Title 20 Appliance Efficiency Regulations.
3. Vacancy Sensors shall meet all applicable requirements for Vacancy Sensor Controls devices in the Title 20 Appliance Efficiency Regulations.
4. Partial-ON Sensors shall meet all applicable requirements for partial on sensing devices in the Title 20 Appliance Efficiency Regulations.
5. Partial-OFF Sensors shall meet all applicable requirements for partial off sensing devices in the Title 20 Appliance Efficiency Regulations.
6. All Occupant Sensing Control types shall be programmed to turn OFF all or part of the lighting no longer than 20 minutes after the space is vacated of occupants, except as specified by §130.1(c)8.

EXCEPTION to §110.9(b)4: Occupant Sensing Control systems may consist of a combination of single or multi-level Occupant, Motion, or Vacancy Sensor Controls, provided that components installed to comply with manual-on requirements shall not be capable of conversion by the user from manual-on to automatic-on functionality.

E. **Part-Night Outdoor Lighting Controls**, as defined in §100.1, shall meet all of the following requirements:

1. Have sunrise and sunset prediction accuracy within +/- 15 minutes and timekeeping accuracy within five minutes per year; and
2. Have the ability to setback or turn off lighting at night as required in §130.2(c), by means of a programmable timeclock or motion sensing device; and
3. When controlled with a timeclock, shall be capable of being programmed to allow the setback or turning off of the lighting to occur from any time at night until any time in the morning, as determined by the user.

Lighting control devices are required to have various types of functionality, depending on what type of control they are, and whether they are "devices" (consisting of a single component), or "systems" consisting of two or more components. Lighting control devices are regulated by Title 20 California Code of Regulations the Appliance Standards (California Code of Regulations, Title 20), whereas lighting control systems are regulated by §110.9 of the Energy Standards.

A. Self-contained lighting control devices are defined by the Energy Standards as unitary lighting control modules that require no additional components to be fully functional lighting controls. Most self-contained lighting controls are required to be certified by the manufacturer according to the Title 20 Appliance Efficiency Regulations; please see the Appliance Standards Manual for details of those requirements. The following lighting controls related to outdoor lighting control, are required to be certified to Title 20 as specified in §110.9(b):

1. Time-Switch Lighting Controls
   - Outdoor Astronomical Time-Switch Controls
2. Daylighting Controls
   - Photo Controls
3. Occupant Sensing Controls
   - Motion Sensors
4. Part-Night Outdoor Lighting Control

A Part-Night Outdoor Lighting Control is defined by the Energy Standards as a time or occupancy-based lighting control device or system that is programmed to reduce or turn off the lighting power to an outdoor luminaire for a portion of the night.

A part-night control device is <u>not</u> required to be certified to Title 20, but must meet the requirements as specified in §110.9(b)5. It must:

a. Be able to accurately predict sunrise and sunset within +/- 15 minutes and timekeeping accuracy within five minutes per year; and
b. Be able to setback or turn off lighting at night as required in §130.2(c), by means of a programmable timeclock or motion sensing device; and
c. When the setback or turning off is controlled with a timeclock, shall be capable of being programmed to allow the setback or turning off of the lighting to occur from any time at night until any time in the morning, as determined by the user.

B. Lighting Control Systems are defined by the Energy Standards as requiring two or more components to be installed in the building to provide all of the functionality required to make up a fully functional and compliant lighting control. Lighting control systems are not required to be certified to Title 20, and may be installed for compliance with lighting control requirements in the Energy Standards providing they meet all of the following requirements:

1. A lighting control system shall comply with all requirements listed below; and all components of the system considered together as installed shall meet all applicable requirements for the lighting control application for which they are installed as required in §130.0 through §130.5, §140.6 through §140.8, §141.0, and §150(k).
2. For all lighting control systems, including Energy Management Control Systems (EMCS), an installation certificate shall be signed by the licensee of record in accordance with §130.4(b) and Nonresidential Appendix NA7
3. If there are indicator lights that are integral to a lighting control system, they shall consume no more than one watt of power per indicator light.
4. A lighting control system shall meet all of the requirements in the Title 20 Appliance Efficiency Regulations for the identical self-contained lighting control device it is installed to function as. For example, if a lighting control system is installed to comply with the requirements for an occupancy sensor, then the system shall comply with all of the requirements for an occupancy sensor in Title 20.
5. If the system is installed to function as a partial-on or partial-off occupant sensor, the installation may be made up of a combination of single or multi-level Occupant, Motion, or Vacancy Sensor Controls, provided that the components installed to comply with manual-on requirements shall not be capable of conversion by the user from manual-on to automatic-on functionality.

Example 6-13 Manufacturer Responsibility for Certified Controls

Question

What is the responsibility of the manufacturer with regard to using lighting controls that are certified by the Energy Commission and listed in the Energy Commission directories?

Answer

It is the responsibility of the manufacturer to certify its specific controls and to present the data to the Energy Commission so that it can be listed in the Energy Commission directories.

Example 6-14 Designer Responsibility for Certified Controls

Question

What is the responsibility of the designer with regard to using lighting controls that are certified by the Energy Commission and listed in the Energy Commission directories?

Answer

It is the responsibility of the designer to specify only lighting controls that have been listed certified and listed in the Energy Commission directories.

Example 6-15 Installer Responsibility for Certified Controls

Question

What is the responsibility of the installer with regard to using lighting controls that are certified by the Energy Commission and listed in the Energy Commission directories?

Answer

It is the responsibility of the installer to install only controls that are certified by the Energy Commission and listed in the Energy Commission directories. It is also the responsibility of the installer to sign the Installation Certificate.

6.4 Prescriptive Measures

6.4.1 Lighting Zones

The basic premise of the Energy Standards is to base the outdoor lighting power that is allowed on how bright the surrounding conditions are. The Energy Standards contain lighting power allowances for newly installed equipment and specific alterations that are dependent on which Lighting Zone the project is located.

The technical basis for the differences in outdoor lighting zones described by the Illuminating Engineering Society of North America (IES) is that the eyes adapt to darker surrounding conditions and less light is required to properly see; when the surrounding conditions get brighter, more light is needed to see. The least power is allowed in Lighting Zone 1 and increasingly more power is allowed in Lighting Zones 2, 3, and 4. Lighting Zone 0 is intended for undeveloped spaces in parks and wildlife preserves and is very low ambient illumination. Providing greater power than is needed potentially leads to debilitating glare and an increasing spiral of brightness as over-bright projects become the surrounding conditions for future projects causing future projects to unnecessarily require greater power resulting in wasted energy.

For outdoor lighting design recommended practice documents, the IES has directed the various committees to incorporate the Lighting Zone concept into the design criteria. However, in 2014, the IES published a new Recommended Practice for Parking Facilities. In this document, the Lighting Zone concept has been effectively disregarded by establishing a single design criteria for Lighting Zones 1-4. As a result, the new Lighting Zone allowances for General Hardscape do not increment upward in the same manner as previous versions of the Code.

The Energy Commission defines the boundaries of Outdoor Lighting Zones based on the 2010 U.S. Census Bureau boundaries for urban and rural areas as well as the legal boundaries of wilderness and park areas (see Energy Standards Table 10-114-A). By default, government designated parks, recreation areas and wildlife preserves are Lighting Zone 0 and Lighting Zone 1. Lighting Zone 0 areas are undeveloped areas of government designated parks, recreation areas, and wildlife preserves; Lighting Zone 1 are developed portions of government designated parks, recreation areas and wildlife preserves.. Rural areas are Lighting Zone 2; and urban areas are Lighting Zone 3. Lighting Zone 4 is a special use district that may be created by a local government through application to the Energy Commission.

Table 6-3 – Lighting Zone Characteristics and Rules for Amendments by Local Jurisdictions

Zone	Ambient Illumination	State wide Default Location	Moving Up to Higher Zones	Moving Down to Lower Zones
LZ0	Very Low	Undeveloped areas of government designated parks, recreation areas, and wildlife preserves.	Undeveloped areas of government designated parks, recreation areas, and wildlife preserves can be designated as LZ1 or LZ2 if they are contained within such a zone.	Not applicable
LZ1	Low	Developed portion of government designated parks, recreation areas, and wildlife preserves. Those that are wholly contained within a higher lighting zone may be considered by the local government as part of that lighting zone.	Developed portion of a government designated park, recreation area, or wildlife preserve, can be designated as LZ2 or LZ3 if they are contained within such a zone.	Not applicable.
LZ2	Moderate	Rural areas, as defined by the 2010 U.S. Census.	Special districts within a default LZ2 zone may be designated as LZ3 or LZ4 by a local jurisdiction. Examples include special commercial districts or areas with special security considerations located within a rural area.	Special districts and government designated parks within a default LZ2 zone maybe designated as LZ1 by the local jurisdiction for lower illumination standards, without any size limits.
LZ3	Moderately High	Urban areas, as defined by the 2010 U.S. Census.	Special districts within a default LZ3 may be designated as a LZ4 by local jurisdiction for high intensity nighttime use, such as entertainment or commercial districts or areas with special security considerations requiring very high light levels.	Special districts and government designated parks within a default LZ3 zone may be designated as LZ1 or LZ2 by the local jurisdiction, without any size limits.
LZ4	High	None	Not applicable.	Not applicable.

Energy Standards Table 10-114-A

The options allowed under §10-114 are as follows:

A. Parks, Recreation Areas and Wildlife Preserves

The default for undeveloped portions of government designated parks, recreation areas, and wildlife preserves is Lighting Zone 0. The local jurisdiction having authority over the property will know if the property is a government designated park, recreation area, or wildlife preserve.

The default for developed portions of government designated parks, recreation areas, and wildlife preserves is Lighting Zone 1. The local jurisdiction having authority over the property will know if the property is a government designated park, recreation area, or wildlife preserve. However, when a park, recreation area, wildlife preserve, or portions thereof, are surrounded by urban areas (as defined by the U.S. Census Bureau), such areas may be designated as Lighting Zone 3 by adoption of the local jurisdiction. Similarly, a Lighting Zone 2 designation can be adopted if the area is surrounded by rural areas (as

defined by the U.S. Census Bureau). All adjustments in LZ designation must be reviewed by the CEC for approval.

B. Rural Areas

The default for rural areas as defined by the U.S. Census Bureau is Lighting Zone 2. However, local jurisdictions having building permit authority may designate certain areas as either Lighting Zone 3 or Lighting Zone 4 if the local jurisdiction determines that ambient lighting levels are higher than typical for a rural area. Examples of areas that might be designated Lighting Zone 3 are special commercial districts or areas with special security considerations. All adjustments in LZ designation must be reviewed by the CEC for approval.

Local jurisdictions also may designate default Lighting Zone 2 areas as Lighting Zone 1, which would establish lower lighting power for outdoor areas with lower surrounding brightness. An example of an area that might be changed to Lighting Zone 1 would include an underdeveloped, environmentally sensitive or predominately residential area within a default Lighting Zone 2 area.

C. Urban Areas

Lighting Zone 3 is the default for urban areas, as defined by the U.S. Census Bureau. Local jurisdictions may designate areas to Lighting Zone 4 for high intensity nighttime use, such as entertainment or commercial districts or areas with special security considerations requiring very high light levels. All adjustments in LZ designation must be reviewed by the CEC for approval.

Local jurisdictions also may designate areas as Lighting Zone 2 or even Lighting Zone 1 if they deem that this is appropriate.

6.4.1.1 Determining the Lighting Zone for an Outdoor Lighting Project

Permit applicants may determine the Lighting Zone for a particular property using the following steps:

- Local jurisdiction – Check with the local jurisdiction having authority over permitting of the property. The local jurisdiction will know if the property is a government designated park, recreation area, or wildlife preserve, and therefore in default Lighting Zone 0 or 1. The local jurisdiction also may know if the property is contained within the physical boundaries of a Lighting Zone for which a locally-adopted change has been made. However, verify through the California Energy Commission website whether or not a locally-adopted change has been submitted to the Energy Commission.
- U.S. Census – Look at the U.S. Census website to determine if the property is within a rural (statewide default Lighting Zone 2) or urban (statewide default Lighting Zone 3) census block.
    - According to the US Census Bureau, there are two types of urban area, Urbanized Areas (UAs) of 50,000 or more people and Urban Clusters (UCs) of at least 2,500 and less than 50,000 people. Furthermore, “Rural” encompasses all population, housing, and territory not included within an urban area.
    - There is an address search tool provided by US Census Bureau. Enter the address and look up for the geography results indicating whether the entered address is urban or rural under geography type.

      (http://factfinder.census.gov/faces/nav/jsf/pages/searchresults.xhtml?ref=addr&refresh=t)

  - A 'Geography Results' window will display a number of geographies within which the address is located. If you are in an urban area, one of the geographies will designate this; otherwise you are in a rural geography.

- Energy Commission website – Check the Energy Commission's website to determine if the property is contained within the physical boundaries of a Lighting Zone that has been changed through a local jurisdiction adoption process.

6.4.1.2 Examples for Defining Physical Boundaries

Using Metes and bounds is a good method to use for defining the physical boundaries of an adopted Lighting Zone.

Metes and bounds is a system that uses physical features of the local geography, along with directions and distances, to define and describe the boundaries of a parcel of land. The boundaries are described in a running prose style, working around the parcel of the land in sequence, from a point of beginning, returning back to the same point. The term "metes" refers to a boundary defined by the measurement of each straight run, specified by a distance between the terminal points, and an orientation or direction. The term "bounds" refers to a more general boundary descriptions, such as along a certain watercourse or public road way.

Following are examples of using metes and bounds to define the physical boundaries of an adopted Lighting Zone:

- Properties with frontage on Kennedy Memorial Expressway, between First Avenue and Main Street to a depth of 50 ft from each frontage property line.
- The area 500 ft east of Interstate 5, from 500 ft north of Loomis Ave to 250 ft south of Winding Way.
- The area of the Sunrise Bike Trail starting at Colfax Avenue and going east to Maple Park, the width of a path which is from the edge of the South Fork of the American River on one side, to 100 ft beyond the paved bike trail, or to private property lines, whichever is shorter, on the other side.
- The area that is bounded by the Truckee River on the West, Grizzly Lane on the south, Caddis Road on the east, and the boundary of Placer County on the north.

Note: The physical boundaries of a changed Lighting Zone are not required to coincide with the physical boundaries of a census tract.

Figure 6-2 – Example of US Census Bureau Information

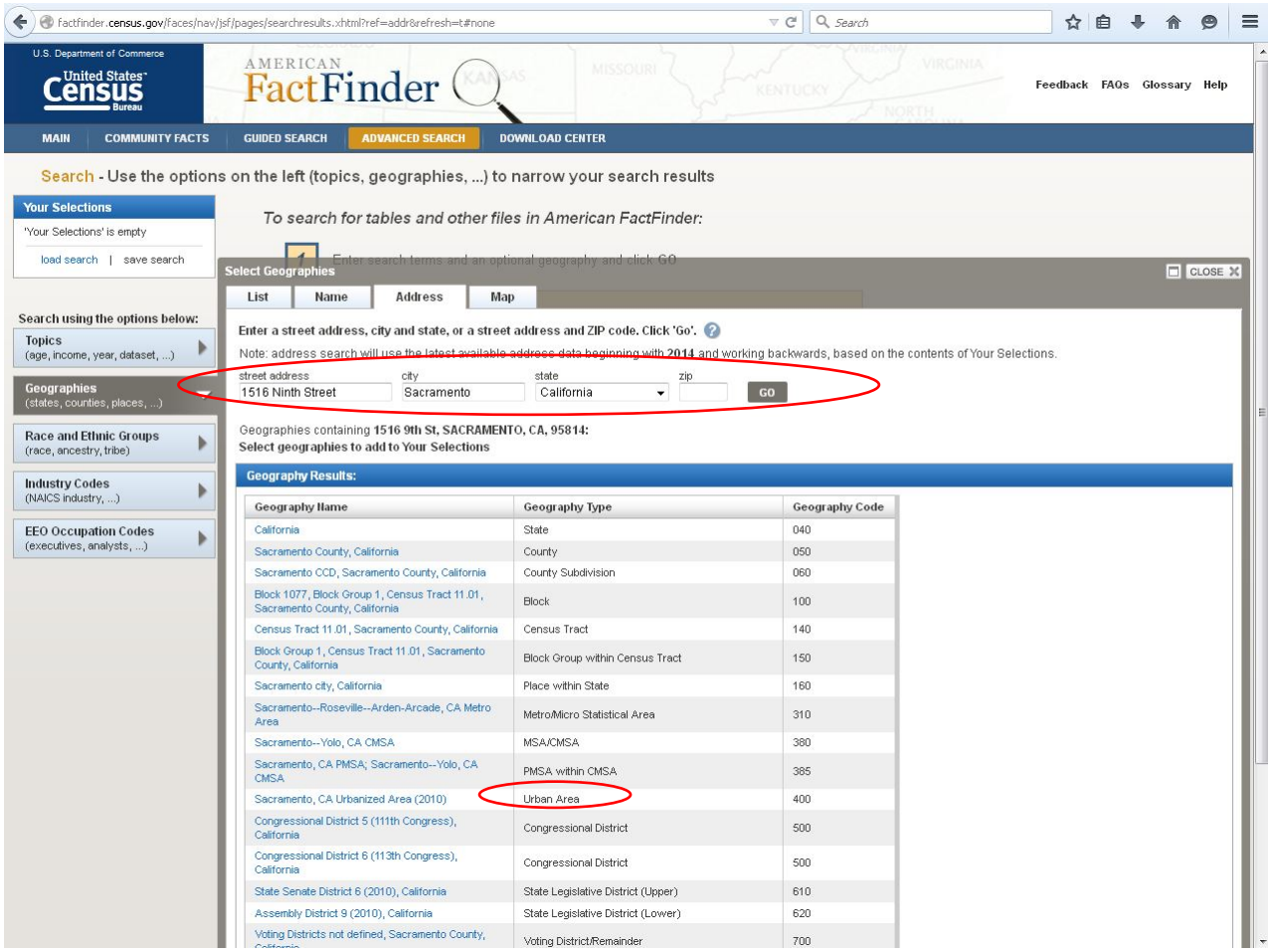

Example 6-16 Changing the Default Lighting Zone

Question

I want to have the default outdoor Lighting Zone for a particular piece of property changed. How do I accomplish that?

Answer

Check with the local jurisdiction having authority over the property and ask them what you need to do to petition them to have the default outdoor Lighting Zone officially adjusted.

6.4.1.3 Lighting Zone Adjustments by Local Jurisdictions

§10-114

Energy Standards Table 10-114-A

The Energy Commission sets statewide default Lighting Zones. However, jurisdictions (usually a city or county), may change the zones to accommodate local conditions. Local governments may designate a portion of Lighting Zones 2 or 3 as Lighting Zone 3 or 4. The local jurisdiction also may designate a portion of Lighting Zone 3 to Lighting Zone 2 or even Lighting Zone 1. When a local jurisdiction adopts changes to the Lighting Zone boundaries, it must follow a public process that allows for formal public notification, review, and comment

about the proposed change. The local jurisdiction also must provide the Energy Commission with detailed information about the new Lighting Zone boundaries, and submit a justification that the new Lighting Zones are consistent with the specifications in §10-114.

The Energy Commission has the authority to disallow Lighting Zone changes if it finds the changes to be inconsistent with the specification of §10-114 including Table 10-114-A.

6.4.2 Outdoor Lighting Power Compliance

An outdoor lighting installation complies with the Energy Standards if the actual outdoor lighting power is no greater than the allowed outdoor lighting power. This section describes the procedures and methods for complying with §140.7(a through d).

In some situations, more than one lighting designer designs the outdoor lighting. An example might be that one designer is designing the pole mounted lighting for the parking lot and another designs the lighting that is attached to the building. Final compliance documentation must be developed that accounts for all outdoor lighting power and calculates the allowable lighting power once.

Two separate sets of outdoor lighting compliance documentation may unintentionally double count the allowances for outdoor lighting. Therefore, this needs to be considered when evaluating the sum total of the actual installed outdoor lighting power.

The allowed lighting power is determined by measuring the area or length of the lighting application and multiplying this area (in W/ft²) or length (in W/ft²) times the Lighting Power Allowance (in W). The allowed lighting power must be calculated for the general hardscape lighting of the site and for specific applications if desired.

The area of the lighting application must be defined exclusive of any areas on the site that are not illuminated.

The actual power of outdoor lighting is the total watts of all of the non-exempt lighting systems (including ballast, driver or transformer loss) (See §140.7(c)).

The allowed outdoor lighting power is calculated by Lighting Zone as defined in §10-114. Local governments may amend Lighting Zones in compliance with §10-114. See Section 6.4.1 for more information about amending outdoor ordinances by local jurisdictions.

6.4.2.1 **Maximum Outdoor Lighting Power**

The Energy Standards establish maximum outdoor lighting power that can be installed. The allowed outdoor lighting power must be determined according to the Outdoor Lighting Zone in which the site is located. See Section 6.4.1 for more information about Outdoor Lighting Zones.

The wattage of outdoor luminaires must be determined in accordance with §130.0(c) or Reference Nonresidential Appendix NA8. See Section 5.3 for more information about determining luminaire wattage.

The total allowed lighting power is the combined total of all of the allowed lighting power layers. There are lighting power allowances for general hardscape lighting and lighting power allowances for specific applications. An outdoor lighting installation complies with the lighting power requirements if the actual outdoor lighting power installed is no greater than the allowed outdoor lighting power calculated under §140.7(d) and complies with certain stipulations associated with specific special application allowances. The allowed lighting power shall be the combined total of the sum of the general hardscape lighting allowance determined in accordance with §140.7(d)1, and the sum of the additional lighting power allowance for specific applications determined in accordance with §140.7(d)2.

See Section 6.4.3 for a detailed explanation in determining the total allowed lighting power.

6.4.2.2 **Illuminated Area**

With indoor lighting applications, the entire floor area is considered to be illuminated for the purpose of determining the allowed lighting power. However, for outdoor lighting applications, the number of luminaires, their mounting heights and their layout affect the presumed illuminated area and therefore the allowed lighting power.

The area of the lighting application may not include any areas on the site that are not illuminated. The area beyond the last luminaire is considered illuminated only if it is located within 5 mounting heights of the nearest luminaire.

In plan view of the site, the illuminated area is defined as any hardscape area within a square pattern around each luminaire or pole that is 10 times the luminaire mounting height, with the luminaire in the middle of the pattern. Another way to envision this is to consider an illuminated area from a single luminaire as the area that is 5 times the mounting height in four directions.

Illuminated areas shall not include any area that is obstructed by any other structure, including a sign or within a building, or areas beyond property lines.

The primary purpose for validating the illuminated area is to not include any areas that are not illuminated. Areas that are illuminated by more than one luminaire shall not be double counted. Either an area is illuminated or it is not illuminated.

When luminaires are located further apart (more than 10 times their mounting height apart), then the illuminated area stops at 5 times the mounting height of each luminaire.

Planters and small landscape areas are included within the general hardscape area as long as the short dimension of the inclusion is less than 10 ft wide, and the inclusion is bordered on at least three sides.

Landscape areas that are greater than 10 ft wide in the short dimension are excluded from the general hardscape area calculation, but the perimeter of these exclusions may be included in the linear wattage allowance (LWA) calculation.

6.4.3 General Hardscape Lighting Power Allowance

6.4.3.1 **Calculation of Allowed Lighting Power**

The allowed lighting power shall be the combined total of the sum of the general hardscape lighting allowance determined in accordance with §140.7(d)1, and the sum of the additional lighting power allowance for specific applications determined in accordance with §140.7(d)2.

A. General Hardscape Lighting Allowance

Hardscape is defined in §100.1 as an improvement to a site that is paved and has other structural features, including but not limited to, curbs, plazas, entries, parking lots, site roadways, driveways, walkways, sidewalks, bikeways, water features and pools, storage or service yards, loading docks, amphitheaters, outdoor sales lots, and private monuments and statuary.

General Hardscape lighting allowance = (Hardscape Area x AWA) + (Perimeter Length of Hardscape Area x LWA) + IWA

Determine the general hardscape lighting power allowances as follows:

1. The general hardscape area of a site shall include parking lot(s), roadway(s), driveway(s), sidewalk(s), walkway(s), bikeway(s), plaza(s), bridge(s), tunnel(s), and other improved area(s) that are illuminated. In plan view of the site, determine the illuminated hardscape area, which is defined as any hardscape area that is within a square pattern around each luminaire or pole that is ten times the luminaire mounting height with the luminaire in the middle of the pattern, less any areas that are within a building, beyond the hardscape area, beyond property lines, or obstructed by a structure. The illuminated hardscape area shall include portions of planters and landscaped areas that are within the lighting application and are less than or equal to 10 feet wide in the short dimensions and are enclosed by hardscape or other improvement on at least three sides. Multiply the illuminated hardscape area by the Area Wattage Allowance (AWA) from Table 6-4 (Table 140.7-A) for the appropriate Lighting Zone.
2. Determine the perimeter length of the general hardscape area. The total hardscape perimeter is the length of the actual perimeter of the illuminated hardscape on the property. It shall not include portions of hardscape that is not illuminated according to §140.7(d)1A. Multiply the hardscape perimeter by the Linear Wattage Allowance (LWA) for hardscape from Table 6-4 (Table 140.7-A) for the appropriate lighting zone. Generally, if there is an enclosed exclusion in the area AWA calculation, the perimeter may be included in the LWA calculation.

   The perimeter length for hardscape around landscaped areas and permanent planters shall be determined as follows:

   i. Landscaped areas completely enclosed within the hardscape area, and which width or length is a minimum of 10 feet wide, the perimeter of the landscaped areas or permanent planter shall be added to the hardscape perimeter length.

   ii. Landscaped areas completely enclosed within the hardscape area, and which have a width or length less than 10 feet wide, shall not be added to the hardscape perimeter length.

   iii. Landscaped edges that are not abutting the hardscape shall not be added to the hardscape perimeter length.
3. Determine the Initial Wattage Allowance (IWA). The IWA is allowed to be used one time per site. The purpose is to provide additional watts for small sites, or for odd hardscape geometries. Add the IWA for general hardscape lighting from Table 6-4 (Table 140.7-A) for the appropriate lighting zone.

The general hardscape lighting allowance shall be the sum of the allowed watts determined from (1), (2) and (3) above.

Table 6-4 - General Hardscape Lighting Power Allowance

Type of Power Allowance	Lighting Zone 0	Lighting Zone 1	Lighting Zone 2[2]	Lighting Zone 3[2]	Lighting Zone 4
Area Wattage Allowance (AWA)	No allowance[1]	0.020 W/ft²	0.030 W/ft²	0.040 W/ft²	0.050 W/ft²
Linear Wattage Allowance (LWA)		0.15 W/lf	0.25 W/lf	0.35 W/lf	0.45 W/lf
Initial Wattage Allowance (IWA)		340 W	450 W	520 W	640 W

[1] Continuous lighting is explicitly prohibited in Lighting Zone 0. A single luminaire of 15 Watts or less may be installed at an entrance to a parking area, trail head, fee payment kiosk, outhouse, or toilet facility, as required to provide safe navigation of the site infrastructure. Luminaires installed in Lighting Zone 0 shall meet the maximum zonal lumen limits for Uplight and Glare specified in Table 130.2-A and 130.2-B.

[2] For lighting Zone 2 and 3, where greater than 50% of the paved surface of a parking lot is finished with concrete, the AWA for that area shall be 0.035 W/ft^2 for Lighting Zone 2 and 0.040 W/ft^2 for Lighting Zone 3, and the LWA for both lighting zones shall be 0.70 W/lf. This does not extend beyond the parking lot, and does not include any other General Hardscape areas.

Table 140.7-A from the Energy Standards

The allowed lighting power for general hardscape lighting is calculated using the following components:

- Area Wattage Allowance (AWA), which is the area of the illuminated hardscape, and is expressed in watts per square foot.
- Linear Wattage Allowance (LWA), which is the length of the perimeter of the illuminated hardscape, and is expressed in watts per linear foot.
- Initial Wattage Allowance (IWA), which is a flat allowance for each property, and is expressed in watts.

To determine the total allowed power for general hardscape lighting, use the equation: (Hardscape area x AWA) + (Hardscape perimeter x LWA) + (IWA).

Example 6-17 Power Allowance for Parking Lots

Question

In a parking lot in front of a retail store, we are not using the full lighting power allowance values from Table 140.7-A for the parking lot. Can we use the remaining allowance to illuminate the building entrance and the walkways near the store to a higher level?

Answer

Yes, because hardscape power densities are tradable, you may use the unused portion of the power allowance in the parking lot to increase the illumination levels for other lighting applications, including building entrance and walkway areas.

Example 6-18 Illumination for Stairs

Question

Lighting for stairs is exempt from the requirements of §140.7, so is a pole-mounted luminaire that is located at the stairs considered exempt, even though some of the light serves hardscape areas that are not exempt?

Answer

In this example, the luminaire is not regulated by the Energy Standards if the primary purpose for that luminaire is to illuminate the stairs (or other unregulated areas), and a majority of the light coming from a luminaire falls on stairs. However, the luminaire is regulated by the Energy Standards if the majority of the light coming from the luminaire falls on regulated areas, such as hardscape areas other than the stairs. For example, if the luminaire is equipped with optics that directs more than 50 percent of the light towards the stairs, then the luminaire may be considered stair lighting and therefore exempt. Conversely, the luminaire must be considered hardscape lighting if the lack of proper optical controls results in more than 50 percent of the light falling on the adjacent hardscape areas.

Example 6-19 Calculating the Illuminated Area of a Parking Lot

Question

A parking lot is only illuminated from a series of 5 cut-off wall packs mounted on an adjacent building. The parking lot extends 100 ft from the building. The luminaires are mounted at a height of 15 ft above the ground and spaced 50 ft apart. How large is the illuminated area?

Answer

The illuminated area extends a distance equal to 5 times the mounting height in three directions (the fourth direction is not counted because it is covered by the building). The illuminated area therefore extends from the building a distance of 75 ft. The total illuminated area is 75 ft x 350 ft or 26,250 ft^2.

Example 6-20 Calculating the Illuminated Area

Question

If a pole has a height of 15 ft, what are the dimensions of the square pattern used for power calculations?

Answer

The illuminated area is defined as any area within a square pattern around each luminaire or pole that is 10 times the luminaire mounting height, with the luminaire in the middle of the pattern. It does not include any area that is within a building, under a canopy, beyond property lines, or obstructed by a sign or structure. Therefore, for a 15 ft pole, the area will be described by a square that is 150 ft (15 ft x 10) on each side, or 22,500 ft^2 (150 ft x 150 ft), minus areas that are beyond the property line or other obstructions.

Example 6-21 Calculating the Illuminated Area

Question

If two poles in the center of an illuminated area are a greater distance than 10 times the mounting height, will all of the square footage between them be included in the area?

Answer

In most applications, for example parking lots, these square patterns will typically overlap, so the entire area of the parking lot between poles will typically be included when determining the lighting power budget. However, if the poles are so far apart that they exceed 10 times the mounting height of the luminaires on the poles, the coverage squares do not overlap and the non-illuminated areas between poles cannot be included in determining illuminated hardscape area.

Example 6-22 Calculating the Power Allowance for a Roadway

Question

A 300 ft long, 15 ft wide roadway leads through a wooded area to a hotel entrance in Lighting Zone 2, and the owner wants to light the roadway with luminaires mounted at a height of 20 ft. What is the allowed lighting power for this roadway?

Answer

The hardscape area for the roadway must first be calculated. If the entire roadway will be lighted, then the 20 ft poles will not be spaced more than 200 ft apart and not more than 100 ft from the ends of the roadway. (Lighted area is 10 times the pole height.) The hardscape area then is 15 ft x 300 ft or 4500 ft². The linear perimeter of this hardscape is the sum of the sides (not including the side that connects to the larger site) 300 ft + 15 ft + 300 ft or 615 ft.

Three allowances make up the total power allowance: Area, Linear, and Initial. However, the initial wattage allowance applies one time to the entire site. It is not considered for usage for this roadway piece which would only be one small part of the site. All allowances are based on Lighting Zone 2 and found in Table 6-4 (Table 140.7-A of the Energy Standards). The area wattage allowance is equal to 135 W (0.03 W/ft² x 4500 ft²).

The linear wattage allowance is equal to 153.75 W (0.25 W/lf x 615 lf).

Finally, the sum of these allowances gives a total wattage allowance for the roadway of 288.75 W (135 W + 153.75 W).

Type of Allowance	*Allowance*	*Area/Perimeter Value*	*Power Allowance*
Initial	450W	-	not used
Area	0.030 W/ft^2	4500 ft^2	135 W
Perimeter	0.25 W/LF	615 ft	153.75 W
TOTAL POWER ALLOWANCE			**288.75 W**

Example 6-23 Calculating the Power Allowance for a Parking Lot

Question

The parking lot illustrated below has two luminaires that are mounted at a height of 25 ft. What is the illuminated hardscape area and what is the allowed lighting? The lot is located in Lighting Zone 3.

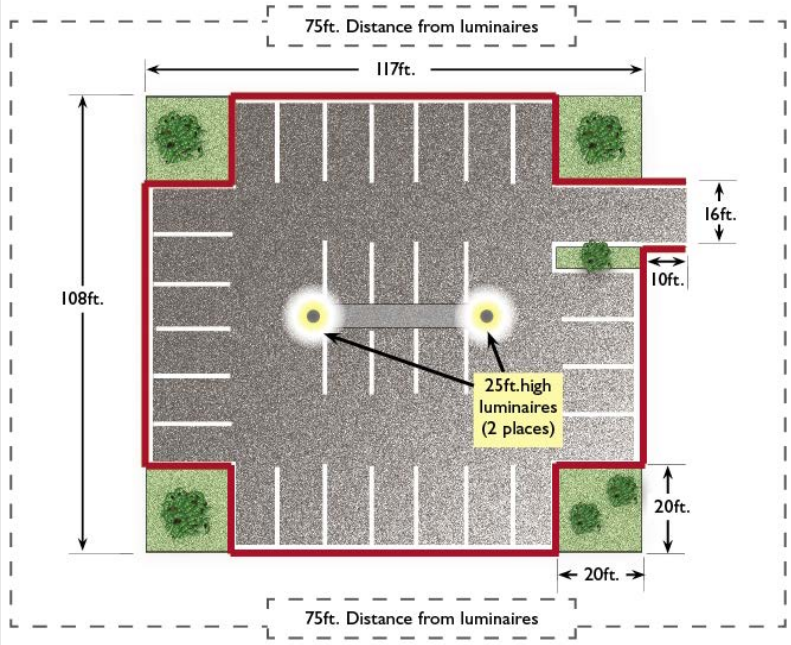

Poles are 40 feet apart

Answer

The poles are 40 ft apart, and using the 10 times mounting height rule, the illuminated area can be as large as 250 ft by 290 ft. The boundary of this maximum illuminated area extends beyond the edges of the parking lot as well as the entrance driveway, so the entire paved area is considered illuminated. The landscaped island in middle and peninsula below the entrance driveway are less than 10 ft wide, so they are included as part of the illuminated area, but not part of the hardscape perimeter. The landscaped cutouts (20 x 20 ft) in the corners of the parking lot are bound by pavement on only two sides so they are not included. The total paved area is 11,196 ft². [(12,636 ft² + 160 ft² (driveway) – 1,600 ft² (cutouts)]. The perimeter of the hardscape is 470 ft [(2 x 77 ft) + (2 x 68 ft) + (8 x 20 ft) + (2 X10 ft)].

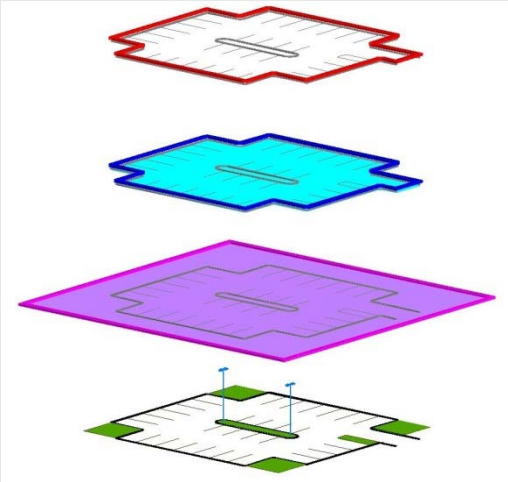

Perimeter

Area

Illuminated Area

Site Plan

Three allowances make up the total power allowance: Area, Linear, and Initial. All allowances are based on lighting zone 3 and found in Table 6-4 (Table 140.7-A of the Energy Standards). The area wattage allowance is equal to 447.84 W (0.040 W/ft² x 11,196 ft²).

The linear wattage allowance is equal to 164.5W (0.35W/lf x470 lf). The initial wattage allowance (IWA) is 520 W for the entire site.

Finally, the sum of these three allowances gives a total wattage allowance for the site of 1132.34 W (447.84 W + 164.5W+ 520 W).

Type of Allowance	*Allowance*	*Area/Perimeter Value*	*Power Allowance*
Initial	520W	-	520 W
Area	0.040 W/ft^2	11,196 ft^2	447.84 W
Perimeter	0.35 W/LF	470 ft	164.5 W
TOTAL POWER ALLOWANCE			**1132.34 W**

Example 6-24 Calculating the Illuminated Area of a Parking Lot

Question

In the parking lot layout shown above, what would the illuminated area be and what would the maximum allowed lighting power be if much smaller pedestrian style poles were used at 8 ft high and placed 30 ft apart?

Answer

If the mounting height is reduced to 8 ft, and the spacing to 30 ft and using the 10 times mounting height rule, the illuminated area can be a rectangle as large as 80 ft by 110 ft. The hardscape area that intersects the maximum allowed illuminated area is now 8,524 ft² [(80 ft x (80 ft + 30 ft) - 2 x (6 ft x 6 ft cutouts) -2 x (6 ft x 17 ft cutouts)]. The new hardscape perimeter is 380 ft [(2 x 88 ft) + (2 x 68 ft) + (4 x 6 ft) + (2 x 6 ft) + (2 x 16 ft)].

Using the same allowances as in the previous example, the total wattage allowance for the site is 993.96 W (340.96 area W + 133 perimeter W + 520 initial W).

Type of Allowance	*Allowance*	*Area/Perimeter Value*	*Power Allowance*
Initial	520W	-	520 W
Area	0.040 W/ft^2	8524 ft^2	340.96 W
Perimeter	0.35 W/LF	380 ft	133 W
TOTAL POWER ALLOWANCE			**993.96 W**

6.4.4 Additional Light Power Allowances and Requirements, by Application

The lighting power for Specific Applications provides additional lighting power that can be layered in addition to the General Hardscape lighting power allowances as applicable.

Most of a site will be classified as ‘General Hardscape’ and will be calculated using Table 6-4 (Table 140.7-A of the Energy Standards) as the only source of allowance.

Some portions of the site may fit use categories that permit the inclusion of an additional lighting allowance for that portion of the site. These Specific Applications are detailed in Table 6-5 (Table 140.7-B of the Energy Standards). Not all of these allowances are based on area.

The single exception to this is the allowance for Hardscape Ornamental Lighting, which is calculated independent of the rest of the Specific Applications, and no regard to the overlap of this Application is made. See Section E for more information about the Hardscape Ornamental Lighting allowance.

Table 6-5 – Additional Lighting Power Allowance for Specific Applications

Lighting Application	Lighting Zone 0	Lighting Zone 1	Lighting Zone 2	Lighting Zone 3	Lighting Zone 4
WATTAGE ALLOWANCE PER APPLICATION. Use all that apply as appropriate.					
Building Entrances or Exits. Allowance per door. Luminaires must be within 20 feet of the door.	Not applicable	15 watts	25 watts	35 watts	45 watts
Primary Entrances to Senior Care Facilities, Police Stations, Hospitals, Fire Stations, and Emergency Vehicle Facilities. Allowance per primary entrance(s) only. Primary entrances are entrances that provide access for the general public. This allowance is in addition to the building entrance or exit allowance above. Luminaires must be within 100 feet of the primary entrance.	Not applicable	45 watts	80 watts	120 watts	130 watts
Drive Up Windows. Allowance per customer service location. Luminaires must be within 2 mounting heights of the sill of the window.	Not applicable	40 watts	75 watts	125 watts	200 watts
Vehicle Service Station Uncovered Fuel Dispenser. Allowance per fueling dispenser. Luminaires must be within 2 mounting heights of the dispenser.	Not applicable	120 watts	175 watts	185 watts	330 watts
ATM Machine Lighting. Allowance per ATM machine. Luminaires must be within 50 feet of the dispenser.	Not applicable	250 watts for first ATM machine, 70 watts for each additional ATM machine.			
WATTAGE ALLOWANCE PER UNIT LENGTH (w/linear ft). May be used for one or two frontage side(s) per site.					
Outdoor Sales Frontage. Allowance for frontage immediately adjacent to the principal viewing location(s) and unobstructed for its viewing length. A corner sales lot may include two adjacent sides provided that a different principal viewing location exists for each side. Luminaires must be located between the principal viewing location and the frontage outdoor sales area.	Not applicable	No Allowance	22.5 W/linear ft	36 W/linear ft	45 W/linear ft
WATTAGE ALLOWANCE PER HARDSCAPE AREA (W/ft²). May be used for any illuminated hardscape area on the site.					
Hardscape Ornamental Lighting. Allowance for the total site illuminated hardscape area. Luminaires must be rated for 100 watts or less and be post-top luminaires, lanterns, pendant luminaires, or chandeliers.	Not applicable	No Allowance	0.02 W/ft²	0.04 W/ft²	0.06 W/ft²
WATTAGE ALLOWANCE PER SPECIFIC AREA (W/ft²). May be used as appropriate provided that only one is used for a given area (i.e., provided that two allowances are not applied to the same area).					
Building Facades. Only areas of building façade that are illuminated qualify for this allowance. Luminaires must be aimed at the façade and capable of illuminating it without obstruction or interference by permanent building features or other objects.	Not applicable	No Allowance	0.18 W/ft²	0.35 W/ft²	0.50 W/ft²
Outdoor Sales Lots. Allowance for uncovered sales lots used exclusively for the display of vehicles or other merchandise for sale. Driveways, parking lots or other non-sales areas are considered hardscape areas even if these areas are completely surrounded by sales lots on all sides. Luminaires must be within 5 mounting heights of the sales lot area.	Not applicable	0.164 W/ft²	0.555 W/ft²	0.758 W/ft²	1.285 W/ft²
Vehicle Service Station Hardscape. Allowance for the total illuminated hardscape area less area of buildings, under canopies, off property, or obstructed by signs or structures. Luminaires must be illuminating the hardscape area and must not be within a building, below a canopy, beyond property lines, or obstructed by a sign or other structure.	Not applicable	0.014 W/ft²	0.155 W/ft²	0.308 W/ft²	0.485 W/ft²
Vehicle Service Station Canopies. Allowance for the total area within the drip line of the canopy. Luminaires qualifying for this allowance shall be located under the canopy.	Not applicable	0.514 W/ft²	1.005 W/ft²	1.300 W/ft²	2.200 W/ft²
Sales Canopies. Allowance for the total area within the drip line of the canopy. Luminaires must be located under the canopy.	Not applicable	No Allowance	0.655 W/ft²	0.908 W/ft²	1.135 W/ft²
Non-sales Canopies and Tunnels. Allowance for the total area within the drip line of the canopy or inside the tunnel. Luminaires must be located under the canopy or tunnel.	Not applicable	0.084 W/ft²	0.205 W/ft²	0.408 W/ft²	0.585 W/ft²

Table 140.7-B from the Energy Standards

Assigned lighting applications must be consistent with the actual use of the area. Outdoor lighting definitions in §100.1 must be used to determine appropriate lighting applications.

Specific Applications that are based on specific instances on the site are the cumulative total of those instances on the site, with the allowance being accumulated per instance.

Specific Applications that are based on the length of an instance on the site are calculated as the product of the total length of the instance and the allowance per linear foot for the Application.

A. General Hardscape Power Trade-Offs

Allowed lighting power determined according to §140.7(d)1 for general hardscape lighting may be traded to specific applications in §140.7(d)2, as long as the hardscape area from which the lighting power is traded continues to be illuminated in accordance with §140.7(d) 1A.

B. Specific Allowances Power Trade-Offs Not Allowed

Allowed lighting power for specific applications shall not be traded between specific applications, or to hardscape lighting in §140.7(d)1. This means that for each and every specific application, the allowed lighting power is the smaller of the allowed power determined for that specific application according to Table 140.7-B, or the actual installed lighting power that is used in that specific application.

C. Wattage Allowance per Application

The applications in this category are provided with additional lighting power, in watts (W) per instance, as defined in Table 6-5 (Table 140.7-B of the Energy Standards). Use all that apply as appropriate. Wattage allowances per application are available for the following areas:

- Building Entrances or Exits.
- Primary Entrances of Senior Care Facilities, Police Stations, Hospitals, Fire Stations, and Emergency Vehicle Facilities.
- Drive-Up Windows. See Section 6.4.5F for additional information about drive-up windows
- Vehicle Service Station Uncovered Fuel Dispenser. See Section 6.4.5C for additional information about vehicle service stations.
- ATM Machine Lighting

D. Wattage Allowance for Outdoor Sales Frontage Application

The wattage allowance per linear foot is available only for outdoor sales frontage immediately adjacent to the principal viewing location(s) and unobstructed for its viewing length. A corner sales lot may include two adjacent sides provided that a different principal viewing location exists for each side. Luminaires qualifying for this allowance shall be located between the principal viewing location and the frontage outdoor. The outdoor sales frontage allowance is calculated as the product of the total length of qualifying sales frontage times the outdoor sales frontage lighting allowance in Table 6-5 (Table 140.7-B of the Energy Standards). See Section 6.4.5B for additional information about sales frontage.

E. Wattage Allowance per Hardscape Ornamental Lighting Application

The ornamental lighting allowance on the site is calculated as the product of the total illuminated hardscape for the site times the hardscape ornamental lighting allowance in Table 6-5 (Table 140.7-B of the Energy Standards), in watts per square foot (W/ft^2). Luminaires qualifying for this allowance shall be rated for 100 W or less as determined in accordance with §130.0(c), and shall be post-top luminaires, lanterns, pendant luminaires, or chandeliers. This additional wattage allowance may be used for any illuminated hardscape area on the site. See Section 6.4.5E, Ornamental Lighting, for additional information about ornamental lighting.

F. Wattage Allowance per Specific Area

Applications in this category are provided with additional lighting power, in watts per square foot (W/ft^2), as defined in Table 140.7-B of the Energy Standards (Table 6-5). Wattage allowances per specific area are available for the following areas:

1. Building Facades

Only areas of building façade that are illuminated shall qualify for this allowance. Luminaires qualifying for this allowance shall be aimed at the façade and shall be capable of illuminating it without obstruction or interference by permanent building features or other objects. See Section 6.4.5A for additional information about building facades.

2. Outdoor Sales Lots

Allowance for uncovered sales lots used exclusively for the display of vehicles or other merchandise for sale. Driveways, parking lots or other non-sales areas shall be considered hardscape areas, not outdoor sales lots, even if these areas are completely surrounded by sales lot on all sides. Luminaires qualifying for this allowance shall be within 5 mounting heights of the sales lot area. See 6.4.5B for more information.

3. Vehicle Service Station Hardscape

Allowance for the total illuminated hardscape area less area of buildings, under canopies, off property, or obstructed by signs or structures. Luminaires qualifying for this allowance shall be illuminating the hardscape area and shall not be within a building, below a canopy, beyond property lines, or obstructed by a sign or other structure.

4. Vehicle Service Station Canopies

Allowance for the total area within the drip line of the canopy. Luminaires qualifying for this allowance shall be located under the canopy. See Section 6.4.5C for additional information about vehicle service stations.

5. Sales Canopies

Allowance for the total area within the drip line of the canopy. Luminaires qualifying for this allowance shall be located under the canopy. See Section 6.4.5D for additional information about lighting under canopies.

6. Non-sales Canopies and Tunnels

Allowance for the total area within the drip line of the canopy or inside the tunnel. Luminaires qualifying for this allowance shall be located under the canopy or tunnel. See Section 6.4.5D for additional information about lighting under canopies.

7. Guard Stations

Allowance up to 1,000 ft² per vehicle lane. Guard stations provide access to secure areas controlled by security personnel who stop and may inspect vehicles and vehicle occupants, including identification, documentation, vehicle license plates, and vehicle contents. Qualifying luminaires shall be within 2 mounting heights of a vehicle lane or the guardhouse. See Section 6.4.5G for additional information about guarded facilities.

8. Student Pick-up/Drop-off zone

Allowance for the area of the student pickup/drop-off zone, with or without canopy, for preschool through 12th grade school campuses. A student pick-up/drop off zone is a curbside, controlled traffic area on a school campus where students are picked up and dropped off from vehicles. The allowed area shall be the smaller of the actual width or 25 ft, times the smaller of the actual length or 250 ft. Qualifying luminaires shall be within 2 mounting heights of the student pick-up/drop-off zone.

9. Outdoor Dining

Allowance for the total illuminated hardscape of outdoor dining. Outdoor dining areas are hardscape areas used to serve and consume food and beverages. Qualifying luminaires shall be within 2 mounting heights of the hardscape area of outdoor dining.

10. Special Security Lighting for Retail Parking and Pedestrian Hardscape

This additional allowance is for illuminated retail parking and pedestrian hardscape identified as having special security needs. This allowance shall be in addition to the building entrance or exit allowance.

6.4.5 Further Discussion about Additional Lighting Power Allowance for Specific Applications

A. Building Facades

Building façade is defined in §100.1 as the exterior surfaces of a building, not including horizontal roofing, signs, and surfaces not visible from any public viewing location. Only areas of building façade that are illuminated should qualify for this allowance. Luminaires qualifying for this allowance should be aimed at the façade and should be capable of illuminating it without obstruction or interference by permanent building features or other objects.

Building façades and architectural features may be illuminated by flood lights, sconces or other lighting attached to the building. Building façade lighting is not permitted in Lighting Zone 0 and Lighting Zone 1. Façade orientations that are not illuminated and façade areas that are not illuminated because the lighting is obstructed shall not be included. General site illumination, sign lighting, and/or lighting for other specific applications can be attached to the side of a building and not be considered façade lighting. Wall packs mounted on sides of the buildings are not considered façade lighting when most of the light exiting these luminaires lands on areas other than the building façade.

Figure 6-3 – Façade Lighting

Courtesy of Horton Lees Brogden Lighting Design, Inc of San Francisco
Photographer: Jay Graham

Example 6-25 Calculating the Allowance for a Projected Area

Question

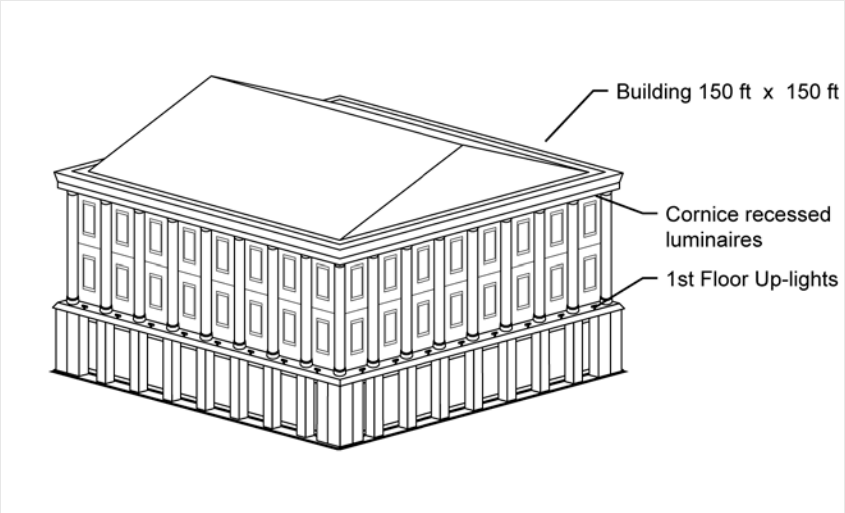

(Lighting Zone 3) A city wants to illuminate its city hall on two sides. The structure is a three-story building with a colonnade on the second and third floors and a cornice above. The columns are considered important architectural features and the principal goal of the lighting project is to highlight these features. The columns are 30 ft tall x 3 ft in diameter and are spaced at 8 ft. For the purposes of determining the lighting power allowance for the building, what is the surface area to be illuminated? What is the lighting power allowance? The columns will be illuminated by downlights at the cornice and uplights above the first floor.

Answer

The area of the façade for the purposes of calculating the lighting allowance is the projected area of the illuminated façade. Architectural features such as columns, recesses, facets, etc. are ignored. The illuminated area for each façade is therefore 30 ft x 150 ft or 4,500 ft². The façade allowance for Lighting Zone 3 is 0.35 W/ft², so the total power allowed is 1,575 W per façade, or 3,150 W total.

Type of Allowance	*Allowance*	*Area/Perimeter Value*	*Power Allowance*
Facade	0.35 W/^{ft2}	B. 4,500 ft^2	1,575 W
	TOTAL POWER ALLOWANCE		**1,575 W**

Example 6-26 Permanent vs. Temporary Façade Lighting

Question

I am designing a high-rise building and permanently mounted marquee lights will be installed along the corners of the building. The lights will be turned on at night, but only for the holiday season, roughly between mid-November and mid-January. The lights consist of a series of 9 W compact fluorescent luminaires spaced at 12 inches on-center (OC) along all the corners of the building and along the top of the building. Essentially, the lights provide an outline of the building. For the purposes of the Outdoor Lighting Standards, are these considered façade lighting? Because they will only be used for about two months of the year, are they considered temporary lighting and exempt?

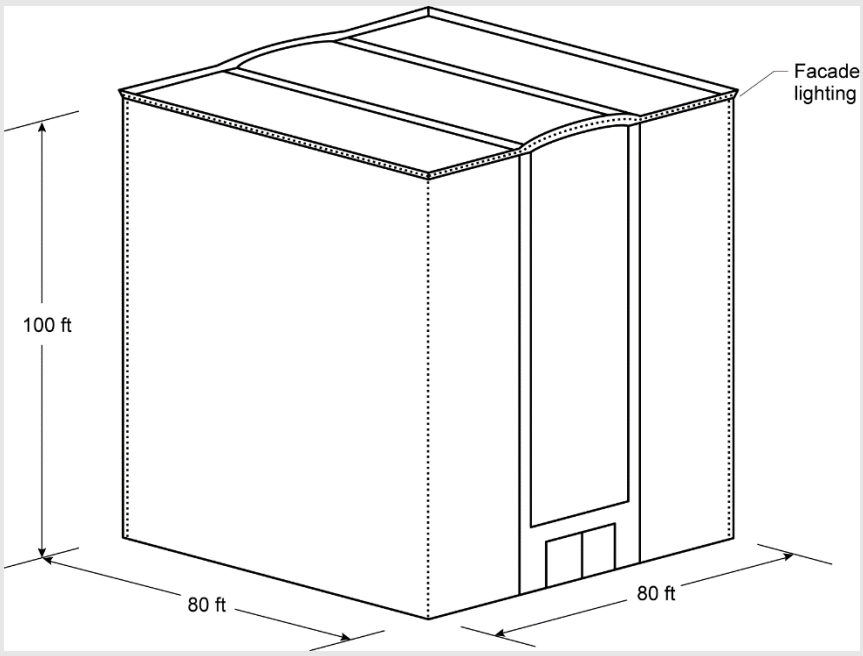

Answer

The lighting is permanent lighting and must comply with the Energy Standards. Temporary lighting is defined in §100.1 as is a lighting installation with plug-in connections that does not persist beyond 60 consecutive days or more than 120 days per year. Anything that is permanently mounted to the building is considered permanent lighting, and the hours of intended use do not affect its status as permanent lighting.

Because this lighting is primarily used to accent the architectural outline of the building, it may be considered façade lighting. And because all corners of the building are illuminated, all four facades may be considered to be illuminated. The area on each façade is 80 ft x 100 ft or 8,000 ft². The total illuminated area is four times 8,000 ft² or 32,000 ft². The Lighting Zone 3 allowance for façade lighting is 0.35 W/ft² and the total power allowance for façade lighting is 11,200 W.

There are 100 ft x 4 plus 80 ft x 4 lamps (a total of 720 lamps) on the building. Each lamp is 13 W (including the ballast). This data is taken from Reference Nonresidential Appendix NA8. The installed power is 720 lamps times 13 W/lamp or 9,360 W. The installed power is less than the allowance so the façade lighting complies. If this building were in Lighting Zone 2, the allowance would be 0.18 W/ft² or a total of 5,760 W. The lighting design would not comply in Lighting Zone 2.

Type of Allowance	*Allowance*	*Area/Perimeter Value*	*Power Allowance*
Facade	0.35 W/^{ft2}	32,000 ft^2	11,200 W
	TOTAL POWER ALLOWANCE		**11,200 W**

Example 6-27 Power Allowance for Facades

Question

Portions of the front façade of a proposed wholesale store in Lighting Zone 3 are going to be illuminated. The front wall dimensions are 120 ft by 20 ft. There is 250 ft² of fenestration in the front wall that is illuminated by the façade lighting. Signs cover another 500 ft² of the front wall, and another 400 ft² is not illuminated at all. What is the allowed front façade lighting power?

Answer

The gross wall area is 2,400 ft² (120 x 20). However we must subtract all those areas that are not illuminated. Note that because the 250 ft² of fenestration is intended to be illuminated by the façade lighting, this area may be included in the total area eligible for power calculations.

The areas not eligible for power calculations include:

500 ft² of signs + 400 ft² of unlighted façade = 900 ft²

Net wall area used for façade lighting: 2,400 ft² – 900 ft² = 1,500 ft²

From Table 6-5 (Table 1407-B of the Energy Standards), the allowed façade lighting power density in Lighting Zone 3 is 0.35 W/ft²

The calculated allowed power based on net wall area is 1,500 ft² x 0.35 W/ft² = 525 W.

The allowed power is therefore the smaller of actual wattage used for façade lighting or 525 W.

Type of Allowance	*Allowance*	*Area/Perimeter Value*	*Power Allowance*
Facade	0.35 W/^{ft2}	1,500 ft^2	525 W
	TOTAL POWER ALLOWANCE		**525 W**

Example 6-28 Sign Lighting

Question

Is sign lighting part of my façade lighting?

Answer

The sign area must be subtracted from the façade area so that the area is not double counted. The sign lighting must meet the requirements of the Energy Standards for sign lighting. See Chapter 7 for more information about sign lighting.

Example 6-29 Oranamental vs. Façade Lighting

Question

Is the lighting of my parapet wall with small wattage decorative lighting considered ornamental or façade lighting?

Answer

In this example, the lamps attached to the building façade are considered façade lighting. This cannot be considered ornamental lighting because ornamental lighting is defined in Table 140.7-B of the Energy Standards as post-top luminaires, lanterns, pendant luminaires, chandeliers.

Example 6-30 Hardscape vs. Façade Lighting

Question

If I mount a luminaire on the side of my building to illuminate an area is it considered façade lighting or hardscape lighting?

Answer

It depends on the primary intent of the luminaire. For example, if the luminaire is primarily illuminating the walls (such as a sconce), then it should be considered part of the building façade lighting. If on the other hand, the luminaire is primarily illuminating the parking lot beyond (most wall packs), then it should be part of the hardscape lighting. It should be noted that lighting power tradeoffs are not allowed between building façade and hardscape areas.

B. Sales Frontage

This additional allowance is intended to accommodate the retailers need to highlight merchandise to motorists who drive by their lot. Outdoor sales frontage includes car lots, but can also include any sales activity.

Outdoor sales frontage must be immediately adjacent to the principal viewing location(s) and unobstructed for its viewing length. A corner sales lot may include two adjacent sides provided that a different principal viewing location exists for each side. Luminaires qualifying for this allowance shall be located between the principal viewing location and the frontage outdoor. The outdoor sales frontage allowance is calculated as the product of the total length of qualifying sales frontage times the outdoor sales frontage lighting allowance in Table 147-B of the Energy Standards.

When a sales lot qualifies for the sales frontage allowance, the total sales lot wattage allowance is determined by adding the following three layers:

- General hardscape lighting power allowance
- Outdoor sales frontage
- Outdoor sales lot

C. Vehicle Service Stations

According to the definition in §100.1, vehicle service station is a gasoline, natural gas, diesel, or other fuel dispensing station. In addition to allowances for building entrances and exits, hardscape ornamental lighting, building façade, and outdoor dining allowances, as appropriate; the total wattage allowance specifically applying to vehicle service station hardscape is determined by adding the following layers, as appropriate:

- General hardscape lighting power allowance
- Vehicle service station uncovered fuel dispenser (allowance per fuelling dispenser, with 2 mounting heights of dispenser)
- Vehicle service station hardscape (less area of buildings, under canopies, off property, or obstructed by signs or other structures)
- Vehicle service station canopies (within the drip line of the canopy)

The lighting power allowances are listed in Table 140.7-B of the Energy Standards.

Figure 6-4 – Service Station Hardscape Areas

Source: AEC Photographer: Tom Bergstrom

Source: AEC Photographer: Tom Bergstrom

Example 6-31 Calculating Canopy Lighting Area and Hardscape Area

Question

Where does canopy lighting area end and hardscape area start?

Answer

The horizontal projected area of the canopy on the ground establishes the area for under canopy lighting power calculations. This area also referred to as the "drip line" of the canopy.

D. Under Canopies

According to the definition in §100.1, a canopy is a permanent structure, other than a parking garage, consisting of a roof and supporting building elements, with the area beneath at least partially open to the elements. A canopy may be freestanding or attached to surrounding structures. A canopy roof may serve as the floor of a structure above.

The definition of a canopy states that a canopy is not a parking garage. A parking garage is classified as an unconditioned interior space, whereas a canopy is classified as an outdoor space.

The lighting power allowance for a canopy depends on its purpose. Service station canopies are treated separately (see the previous section). The two types of canopies addressed in this section are those that are used for sales and those that are not. Non-sales canopies include covered walkways, and covered entrances to hotels, office buildings, convention centers and other buildings. Sales canopies specifically cover and protect an outdoor sales area, including garden centers, covered automobile sales lots, and outdoor markets with permanent roofs. The lighting power allowances are listed in Table 140.7-B of the Energy Standards.

The area of a canopy is defined as the horizontal projected area, in plan view, directly underneath the canopy. This area is also referred to as the "drip line" of the canopy. Canopy lighting, either sales or non-sales shall comply separately, e.g. trade-offs are not permitted between other specific lighting applications or with general site illumination.

General site lighting or other specific applications lighting, and/or sign lighting that are attached to the sides or top of a canopy, cannot be considered canopy lighting. For example, internally illuminated translucent panels on the perimeter of a canopy are considered sign lighting, while the lighting underneath the canopy and directed towards the ground is canopy lighting.

Figure 6-5 – Canopy Lighting

Source: AEC Photographer: Tom Bergstrom

Example 6-32 Power Allowance Under Canopies

Question

The first floor of an office tower in Lighting Zone 3 is setback 20 ft on the street side. The width of the recessed façade is 150 ft. The primary purpose of the setback (and canopy) is to provide a suitable entrance to the office tower; however, space under the canopy is leased as news-stand, a flower cart and a shoe shine stand. These commercial activities occupy about half of the space beneath the canopy. What is the allowed lighting power?

Answer

The total canopy area is 20 ft x 150 ft or 3,000 ft². The General Hardscape allowance for the site will need to be separately determined. The canopy allowance is an additional layer allowed only for the canopy area. The 1,500 ft² used for the flower cart, news-stand and shoe shine stand is considered a sales canopy and the allowance is 0.908 W/ft² or a total of 1,362 W. The other 1,500 ft² is a non-sales canopy and the allowance is 0.408 W/ft² or a total of 612 W. Trade-offs are not permitted between the sales portion and the non-sales portions.

Type of Allowance	*Allowance*	*Area/Perimeter Value*	*Power Allowance*
Non-Sales Canopy	0. 408W/^{ft2}	1,500 ft^2	612 W
Sales Canopy	0.908 w/ft^2	1,500 ft^2	1,362 W
TOTAL POWER ALLOWANCE			**1,575 W**

E. Ornamental Lighting

Ornamental lighting is defined in §100.1 as post-top luminaires, lanterns, pendant luminaires, chandeliers, and marquee lighting. However, marquee lighting does not qualify for the ornamental lighting allowance. The allowances for ornamental lighting are listed in Table 140.7-B of the Energy Standards.

The ornamental lighting allowance on the site is calculated as the product of the total illuminated hardscape for the site times the hardscape ornamental lighting allowance in Table 140.7-B. This allowance is calculated separately, and is not accumulated into the other allowances. This additional wattage allowance may be used for any illuminated hardscape area on the site.

Luminaires used for ornamental lighting as defined in Table 140.7-B shall have a rated wattage, as listed on a permanent, pre-printed, factory-installed label, of 100 W or less.

Figure 6-6– Ornamental Lighting

Source: Ted Walson Photographer

(The cobra head luminaires shown in the above figure are not ornamental lighting. However, if the post-top acorn luminaires are rated 100 watts r less, they qualify as ornamental lighting)

Example 6-33 Bollard Luminaires

Question

Are bollard luminaires considered ornamental lighting?

Answer

No, Ornamental lighting is defined in Table 140.7-B of the Energy Standards as post-top luminaires, lanterns, pendant luminaires, chandeliers.

F. Drive-up Windows

Drive-up windows are common for fast food restaurants, banks, and parking lot entrances. In order to qualify, a drive-up window must have someone working behind the “window”. Automatic ticket dispensers at parking lots do not count.

The lighting power allowances are listed in Table 140.7-B of the Energy Standards as a wattage allowance per application.

The wattage allowance in Lighting Zone 3 is 125 W for each drive-up window.

Luminaires qualifying for this allowance must be within 2 mounting heights of the sill of the window.

Figure 6-7 – Drive-up Windows

Source: AEC Photographer: Tom Bergstrom

Example 6-34 Power Allowance for Drive-up Window

Question

A drive-up window in Lighting Zone 2 has width of 7 ft. What is the allowed lighting power for this drive-up window?

Answer

The width of a drive-up window in not used for determining the allowed wattage. In Lighting Zone 2, 75 W is allowed for each drive-up window.

G. Guarded Facilities

Guarded facilities, including gated communities, include the entrance driveway, gatehouse, and guardhouse interior areas that provide access to secure areas controlled by security personnel who stop and may inspect vehicles and vehicle occupants including, identification documentation, vehicle license plates, and vehicle contents.

There is an allowance of up to 1,000 ft² per vehicle lane. Qualifying luminaires shall be within 2 mounting heights of a vehicle lane or the guardhouse.

The power allowances for guarded facilities are listed in Table 140.7-B of the Energy Standards.

Example 6-35 Power Allowance for Guard Stations

Question

A guard station to the research campus of a defense contractor consists of a guard station building of 300 ft². Vehicles enter to the right of the station and exit to the left. What is the outdoor lighting power allowance? The guard station is located in Lighting Zone 2.

Answer

Since there are two vehicle lanes, the allowance for Lighting Zone 2 is two times of 300 ft² times 0.355 W/ft² is 213 W, in addition to the general hardscape lighting power allowance.

Example 6-36 Residential Guarded Facilities

Question

Is the guarded facility at the entrance to a residential gated community covered by the Energy Standards?

Answer

Yes, residential guarded facilities are covered by the Energy Standards.

Example 6-37 Outdoor Lighting for Hospitals

Question

Is the parking lot outside of a hospital (“I” occupancy) regulated by the Energy Standards?

Answer

No. Hospitals are “I” type occupancies and are not covered by the Energy Standards. This includes all outdoor areas. The same is true for all other “I” type occupancies such as detention facilities.

Example 6-38 Parking Garage Standards

Question

We have a 5 story parking garage. The top level is uncovered. What are the lighting Standards requirements for this garage?

Answer

Because the lower 4 floors have a roof, they are considered indoor unconditioned buildings and must comply with the requirement of Energy Standards Table 140.6-C. For these levels, indoor compliance documents will be required. The uncovered top floor is considered a parking lot and therefore must comply with the hardscape requirements of Table 140.7-A in the Energy Standards. Outdoor lighting compliance documents will be required for the top level.

Example 6-39 Hardscape Materials for Parking Lots

Question

Our overflow parking lot is covered with gravel. Is this parking lot considered "hardscape" and must it comply with the Energy Standards?

Answer

Yes, parking lots covered with gravel, or any other material used to enhance the surface to accommodate parking or travel, such as pavers, asphalt, cement, or other pervious or non-pervious materials are considered hardscape and must comply with the requirements for hardscape areas.

6.5 Alterations and Additions for Outdoor Lighting

§141.0(b)2J

This section will be included at a later time.

6.6 Outdoor Lighting Compliance Documents

This section contains information about required outdoor lighting documentation, including outdoor lighting plan check documents, Installation Certificate, and Certificate of Acceptance.

6.6.1 Overview

At the time a building permit application is submitted to the enforcement agency, the applicant also submits plans and energy compliance documentation. This section describes the compliance documentations needed for compliance with the nonresidential outdoor lighting requirements of the Energy Standards.

This section is addressed to the person preparing construction and compliance documents, and to the enforcement agency plan checkers who are examining those documents for compliance with the Energy Standards.

6.6.2 Compliance Documentation and Numbering Scheme

Nonresidential outdoor lighting Certificate of Compliance documents are listed below:

- NRCC-LTO-01-E; Certificate of Compliance: Outdoor Lighting
- NRCC-LTO-02-E; Certificate of Compliance: Outdoor Lighting Controls
- NRCC-LTO-03-E; Certificate of Compliance: Outdoor Lighting Power Allowances

Nonresidential outdoor lighting Certificate of Installation documents are listed below:

- NRCI-LTO-01-E; Certificate of Installation; Outdoor Lighting
- NRCI-LTO-02-E; Certificate of Installation: Energy Management Control System or Lighting Control System

Nonresidential outdoor lighting Certificate of Acceptance document:

- NRCA-LTO-02-A: Certificate of Acceptance, Outdoor Lighting Controls

The Energy Standards use the following numbering scheme for the nonresidential lighting compliance documents:

NRCC	Nonresidential Certificate of Compliance
NRCI	Nonresidential Certificate of Installation
NRCA	Nonresidential Certificate of Acceptance
LTI	Lighting, Indoor
LTO	Lighting, Outdoor
LTS	Lighting, Sign
01	The first set of compliance documents in this sequence
E	Primarily used by enforcement authority
A	Primarily used by acceptance tester

The paper prescriptive compliance documents have a limited number of rows per section for entering data. Some designs may need fewer rows, and some designs may need additional rows. If additional rows are required for a particular design, then multiple copies of that page may be used.

6.6.3 Certificate of Installation Documents

The Certificates of Installation are primarily used to declare that what was installed matches the plans on the Certificates of Compliance. The Certificate is signed by a person with an approved license.

A copy of the completed signed and dated Installation Certificate must be posted at the building site for review by the enforcement agency in conjunction with requests for final inspection for the building. See Section 2.2.3 for more information about the Installation Certificate.

6.6.4 Certificate of Acceptance

Before an occupancy permit is granted for a new building or space, or a new lighting system serving a building, space, or site is operated for normal use, all outdoor lighting controls serving the site shall be certified as meeting the Acceptance Requirements for Code Compliance. A Certificate of Acceptance shall be submitted to the enforcement agency under Administrative Regulations §10-103(a).

The acceptance requirements that apply to outdoor lighting controls include the following:

- Certifies plans, specifications, installation certificates, and operating and maintenance information meet the requirements of the Energy Standards.
- Certified that outdoor lighting controls meet the applicable requirements of §110.9 and §130.2.

Acceptance testing must be conducted, and a Certificate of Acceptance must be completed and submitted before the enforcement agency can issue the certificate of occupancy. The procedures for performing the acceptance tests are documented in Reference Nonresidential Joint Appendix NA7.8. See the following chapters for more information about outdoor lighting control acceptance requirements.

- Chapter 2- Compliance and Enforcement
- Chapter 13 - Acceptance Requirements
- Reference Nonresidential Joint Appendix NA7.8, Outdoor Lighting Controls Acceptance Test