ENERGY EFFICIENCY STUDY FOR EASTERN MUNICIPAL WATER DISTRICT

Administration Building
Operations & Maintenance Building
Operation & Maintenance Workshops

CONSULTANT REPORT

Prepared For:
California Energy Commission

Contract Number: 400-07-026
Work Authorization Number: 52

Prepared By:
Digital Energy, Inc.

March 2011

Table of Contents

Sections

List of Tables 2
List of Figures 2
Preface 3
Section 1 - Executive Summary 1
Section 2 - Facility Description 4
Section 3 - Existing Energy Use 7
Section 4 – Energy Using Systems 13
Section 5 - Energy Project Summaries 21
Section 6 – Rebates, Incentives, Grants, and Special Funding Opportunities 58

Appendices

A. Baseline Energy Use, Sample Energy Bills, and Current Rate Schedules
B. Energy Balance
C. EEM Measure Calculations
D. Weather Data
E. Cut Sheets and Vendor Cost Quote Requirements
F. Consultant Field Data Sheets, Audit Spreadsheets

List of Tables

Table 1.1 – Recommended Energy Efficiency Measures ... 2
Table 1.2 – Potential EEMs for Future Modernization (Long Payback Period) ... 3
Table 1.3 – Cogeneration Project Summary ... 3
Table 2.1 – Typical Operating Schedules by Building ... 6
Table 3.1A – Electricity Use Summary – EMWD ... 7
Table 3.1B – Natural Gas Use Summary – EMWD ... 7
Table 3.2 – Electricity Energy Balance Summary ... 11
Table 3.3 – Natural Gas Balance Summary ... 12
Table 5.1 – Comparison of baseline and proposed 4-foot fixtures ... 22
Table 5.2 – Analysis summary of proposed Lighting Project L-1 ... 23
Table 5.3 – IES Lighting Illumination Guidelines ... 24
Table 5.4 – Analysis summary of proposed Lighting Project L-2 ... 25
Table 5.5 – Analysis summary of proposed Lighting Project L-3 ... 27
Table 5.6 – Wattages and Lumen comparison of high-bay fixtures ... 28
Table 5.7 – Analysis summary of proposed Lighting Project L-4 ... 30
Table 5.8 – Comparison of MH-400W, 4-F54T5HO, and Induction 250W systems ... 32
Table 5.9 – Total Life Cost Comparison of MH-400W, 4-F54T5HO, and Induction 250W ... 33
Table 5.10 – Comparison of Standard MH 400W vs. LED 147W ... 34
Table 5.11 – Analysis summary of proposed Lighting Project L-5 ... 36
Table 5.12 – Analysis summary of proposed Mechanical Project M-1 ... 39
Table 5.13 – Analysis summary of proposed Mechanical Project M-2 ... 41
Table 5.14 – Analysis summary of proposed Mechanical Project M-3 ... 43
Table 5.15 – Analysis summary of proposed Mechanical Project M-4 ... 45
Table 5.16 – Analysis summary of proposed Mechanical Project M-5 ... 47
Table 5.17 – Analysis summary of proposed Mechanical Project M-6 ... 49
Table 5.18 – Analysis summary of Project M-7A ... 55
Table 5.19 – Analysis summary of Project M-7B ... 55
Table 5.20 – Analysis summary of proposed Low Cost Project E-1 ... 57
Table 6.1 – SCE's Express Solution Incentive program rebates by category ... 60
Table 6.2 – SCE's Customized Solution Incentive program rebates by category ... 61

List of Figures

Figure 2.1 – General vicinity map of EMWD ... 4
Figure 3.1A – EMWD – Chiller Electricity Use ... 8
Figure 3.1B – EMWD – Building Electricity Use ... 8
Figure 3.1C – EMWD – Onsite Electricity Generation ... 9
Figure 3.1D – EMWD – Space Heating Natural Gas ... 9
Figure 3.1E – EMWD – Cogeneration System Fuel (Natural Gas) ... 10
Figure 3.2 - Electricity Use Breakdown ... 11
Figure 3.3 - Gas Use Breakdown ... 12
Figure 5.1A – Photometric analysis of Warehouse – Existing Case (MH-400W) ... 29
Figure 5.1B – Photometric analysis of Warehouse – Proposed Case (4-F54T5-HO) ... 30
Figure 5.2 – EMWD – Cost of Electricity Graph – Off-Peak Winter Use ... 52
Figure 5.3 – EMWD – Cost of Electricity Graph – Mid-Peak Winter Use ... 53
Figure 5.4 – EMWD – Cost of Electricity Graph – Off-Peak Summer Use ... 53
Figure 5.5 – EMWD – Cost of Electricity Graph – Mid-Peak Summer Use ... 54
Figure 5.6 – EMWD – Cost of Electricity Graph – On-Peak Summer Use ... 54

Preface

This study was prepared as a result of the Eastern Municipal Water District request for assistance under the Energy Partnership Program. This Energy Commission Program assists public agencies in identifying projects that can cut energy use and cost in existing and planned facilities while concurrently enhancing building performance. Once the projects are identified, the program can provide additional assistance to help implement or finance the recommendations. The Energy Commission's low rate interest loans provide competitive financing and are structured so that the estimated project savings are the basis for the loan repayments.

This study was conducted for CEC by Digital Energy, Inc., under the direction of Jairam Agaram, P.E. The contract assignment was directed and managed with the assistance of Amir Ehyai, CEC. Digital Energy, Inc. and CEC appreciate the assistance offered by all District personnel during the study efforts. The EMWD staff that assisted in the data collection effort includes the following:

– Chris Teague, EMWD Project Manager

DISCLAIMER

This report was prepared as the result of work sponsored by the California Energy Commission. It does not necessarily represent the views of the Energy Commission, its employees or the State of California. The Energy Commission, the State of California, its employees, contractors and subcontractors make no warrant, express or implied, and assume no legal liability for the information in this report; nor does any party represent that the uses of this information will not infringe upon privately owned rights.

References to specific brand names, products or manufacturers are provided for illustrative purposes only and shall not be considered endorsements by the Energy Commission, the State of California, its employees, contractors, and subcontractors.

Section 1 - Executive Summary

A. Focus and Scope of the Audit

During May of 2010, an energy audit was conducted for the Eastern Municipal Water District ("District") under the Energy Partnership Program. The audit focused on identifying energy saving projects at the Administration Building, Operations & Maintenance Building, and Workshops. This report discusses the results of the energy audit and provides information on the next steps for project implementation.

B. Annual Energy Use and Cost

During a recent 12-month period, the District spent $519,265 for electricity (2,572,193 kWh), and $186,799 for natural gas (395,893 therms) at the audited facility. Based on a combined facility area of 166,800 square-feet, the total energy cost per square foot is $4.23/sq.ft. per year (Electricity-3.113/sq.ft.; Natural Gas-$1.120/sq.ft.).

C. Project Recommendations

The report identifies several projects that can reduce the facilities' overall energy use and cost. If implemented, these projects can cut overall energy cost by 14.12%, or an estimated $99,695 per year. Table 1.1 details the entire project recommendations facility-wide. Table 1.2 details projects that were evaluated but are only recommended as part of future modernization efforts due to their long payback periods. Included are projects which address specific items of interest such as new fluorescent lighting, lighting controls, and high-efficiency HVAC equipment. Detailed information on these and all other projects is contained in Section-5. Section-6 provides information on how some or all of these projects can be funded with a low interest loan from the Energy Commission and incentives offers by Southern California Gas Company.

D. Greenhouse Gas Reduction

Greenhouse Gas Emissions are those greenhouse gases that allow sunlight to enter the atmosphere freely and contribute to the greenhouse effect, which many believe is the cause of global warming. One of the primary greenhouse gases thought to be a major contributor to global warming is carbon dioxide emissions (CO2). Approximately 0.815 lbs of CO2 (greenhouse gas) are released in the production of 1 kWh of electricity. Also, one therm of natural gas burned produces 11.65 lbs of C02.Based on the same, a total of 789,984 lbs[1]. in CO2 greenhouse gas emissions can be saved if all recommended measures proposed in this study are implemented. This is equivalent to approximately 65 passenger cars not driven for one year.[1]

[1] Excludes the cogeneration projects 7A & 7B.

PROJECT SUMMARY TABLES

Table 1.1 – Recommended Energy Efficiency Measures

Project #	Project Description	Peak Demand Savings (kW)	Annual Electricity Savings (kWh)	Annual Gas Savings (Therms)	Project Cost Estimate ($)	Annual Cost Savings ($)	Payback Period without Incentive (years)	Estimated Incentive ($)	Project Costs w/ Incentive ($)	Payback Period with Incentive (years)
L-1	Retrofit all existing T12 fluorescent fixtures with efficienct T8 Ssytem	61.5	247,366	n/a	$120,348	$34,631	3.5	$18,518	$101,829	2.9
L-2	Retrofit all INC lamps with efficient compact fluorescents	4.7	17,046	n/a	$1,875	$2,386	0.8	$1,322	$553	0.2
L-4	Replace all existing high-bay metal halide fixtures with High Intensity Fluorescent T5 high-output linear fluorescent fixtures	13.7	44,408	n/a	$48,082	$6,217	7.7	$3,590	$44,491	7.2
L-5	Retrofit all building exterior and parking fixtures with LED's	23.3	85,206	n/a	$150,693	$11,929	12.6	$6,590	$144,102	12.1
M-1	Update/Retro-commission existing DDC based Energy Management System (EMS)	n/a	229,723	3,409	$219,495	$22,181	9.9	$24,084	$195,411	8.8
M-3	Replace existing screw compressors serving the air-cooled chiller 2 with Turbocor compressor	65.0	172,247	n/a	$75,007	$16,290	4.6	$32,337	$42,670	2.6
M-4	Provide garage door sensor controls at the OMC shops (Auto-Shop & Mechanical Shop)	n/a	n/a	2,752	$1,198	$1,897	0.6	$1,198	$0	0.0
M-5	Replace existing old boiler serving Administration Building with a new low NOX boiler	n/a	n/a	5,859	$45,809	$4,039	11.3	$5,859	$39,949	9.9
E-1	Implement Vending Machine Controls	n/a	1,475	n/a	$458	$124	3.7	$133	$325	2.6
TOTAL		**168.2**	**797,470**	**12,021**	**$662,964**	**$99,695**	**6.6**	**$93,633**	**$569,331**	**5.7**

PROJECT SUMMARY TABLES (POTENTIAL EEMS FOR FUTURE MODERNIZATION)

Table 1.2 – Potential EEMs for Future Modernization (Long Payback Period)

Project #	Project Description	Peak Demand Savings (kW)	Annual Electricity Savings (kWh)	Annual Gas Savings (Therms)	Project Cost Estimate ($)	Annual Cost Savings ($)	Payback Period without Incentive (years)	Estimated Incentive ($)	Project Costs w/ Incentive ($)	Payback Period with Incentive (years)
L-3	Provide occupancy sensor controls to various rooms	n/a	29,893	n/a	$56,436	$2,515	22.4	$1,495	$54,941	21.8
M-2	Implement HVAC control strategy	n/a	28,022	774	$89,400	$3,184	28.1	$3,296	$86,104	27.0
M-6	Retrofit Standard-efficiency hot water circulation central plant pumps with premium efficiency motors; install Variable Frequency Drives (VFDs) on the hot water circulation pumps	n/a	10,613	n/a	$15,602	$893	17.5	$955	$14,647	16.4
Total:			**68,528**	**774**	**161,437**	**6,591**	**24.5**	**5,746**	**155,692**	**23.6**

Table 1.3 – Cogeneration Project Summary

Project #	Project Description	Peak Demand Savings (kW)	Annual Electricity Savings (kWh)	Annual Gas Savings (Therms)	Project Cost Estimate ($)	Annual Cost Savings ($)	Payback Period without Incentive (years)	Estimated Incentive ($)	Project Costs w/ Incentive ($)	Payback Period with Incentive (years)
M-7(A)	(a) Provide demand based logic which will dictate operational mode with lowest variable operation cost.	n/a	-1,165,008	68,047	$32,000	$200,061	0.2	n/a	$32,000	0.2
M-7(B)	Provide additional two micro-turbines to maximize electricity generation and absorption chiller output.	n/a	318,820	-34,934	$188,750	$9,173	20.6	n/a	$188,750	20.6

Section 2 - Facility Description

Background

The Eastern Municipal Water District (EMWD) is located in the City of Perris in the Riverside County. EMWD is located adjacent to I-215 in western Riverside County, about a mile south of the City of Perris. The Water District serves an area of 542-square-mile with a population of around 687,000.

At EMWD's request, this audit was conducted for the following facilities: **(a)** Administration Building, **(b)** Operation and Maintenance Buildings (Offices and Workshops). The general vicinity map of the facility is shown below.

Figure 2.1 – General vicinity map of EMWD

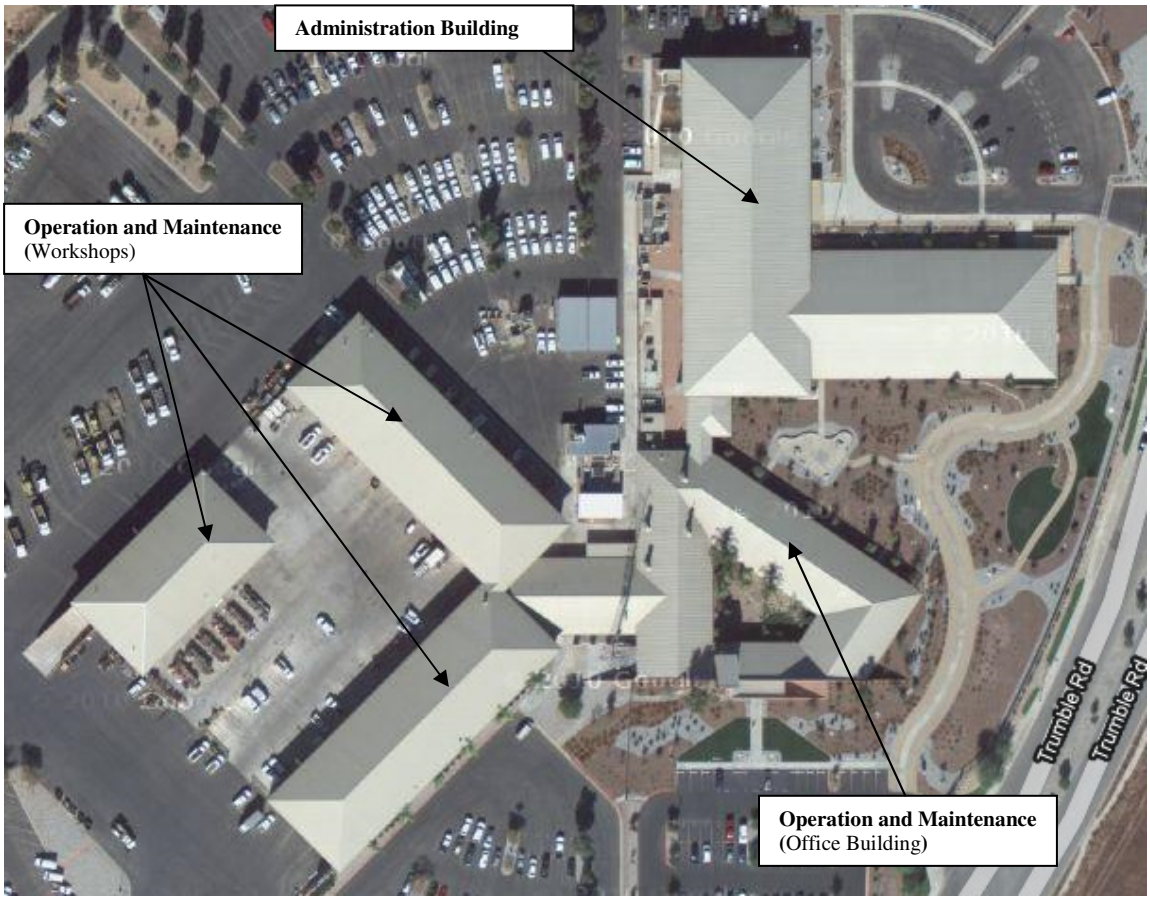

Site Description

Administration Building – First Floor

Administration building is a two-storey building with a gross area of 58,000 sq.ft. The first floor of the building has various departments serving several needs of the EMWD objectives which include Finance, Records Management, Inspection, Information Systems, New Business and Customer Service. This floor has a large reception area, a mail room and a central board room for corporate meetings. Typical activities here include conferences, mail distribution, corporate meetings and other office functions. Office areas mainly operate Monday-Friday, 5 AM to 10 PM and Sunday - 7 AM to 2 PM.

Administration Building – Second Floor

The second floor of the Administration building has departments that include engineering services, Planning and Conservation, Field Engineering and Water Resources. This floor also includes CAD room and Computer training room. Typical activities are conferences, computer training and other specific office functions as requested by each department. Operating hours and days remains the same as of the first floor.

Operation and Maintenance – Office Building

The Operation and Maintenance building is a one-storey building with a total gross area of 43,000 sq.ft. This facility includes various open office spaces dealing with departments such as Human Resources, Operations Management, Water operations and purchasing. O&M building also has a reception area, laboratories and a community room. The main portion of this building is the Central Control Room which is responsible for the execution and control of all the water operations of the EMWD. Office areas mainly operate Monday-Friday, 5 AM to 6 PM and Sunday – 7 AM – 2 PM.

Operation and Maintenance – Workshops

A part of the O&M buildings are the workshops which are spread around an area of 60,000 sq.ft. with each shop having a specific work function. The buildings include an auto shop, mechanical shop, fabrication shop, electrical Shop and a carpentry shop. There is another remote building having auto and paint shops and a meter department. Warehouse is constructed as a separate building away from the workshops for the purpose of storage. The Main functions include mechanical building, repairs, painting and storage of required inventory. Workshops operation Monday – Friday 5:30 AM to 6 PM.

Operating Schedules

Table 2.1 below summarizes building operating schedules (year-round). Lighting usage hours by space type are outlined in Appendix-F of this report (immediately before the room-by-room lighting audit).

Table 2.1 – Typical Operating Schedules by Building

Facility	Year Built	Area (Sq. Ft.)	Typical Operating Schedule	Wks per Year
Administration Building	1995	58,000	Mon - Fri: *5AM - 8PM* Sun: *7AM - 2PM*	52
Operation and Maintenance -Offices	1995	48,800	Mon - Fri: *5AM - 6PM* Sun: *7AM - 2PM*	52
Operation and Maintenance - Shops	1995	60,000	Monday - Friday *5:30AM - 6PM*	52

Local Weather Statistics

Weather data statistics for the City of Perris, CA indicates that the region has approximately 1,271 cooling degree days and approximately 2,350 heating degree days with respect to a base temperature of 65 °F.

Extremes recorded at the weather station show that temperatures have reached as high as 114°F in the summer and as low of 12°F in the winter. The average maximum temperature in the month of August is 96.7°F. The average minimum temperature in the months of January and December are 34.7°F and 34.9°F respectively.

More details on weather statistics for the region are shown in Appendix-D.

Section 3 - Existing Energy Use

Site Energy Usage

Energy records for the Eastern Municipal Water District show that during a recent 12-month period (December 2008 to Novermber 2009), the facility used 2,572,193 kWh of electricity and purchased 57,929 Therms of natural gas for space heating purposes. Also, the facility purchased 337,964 therms of natural gas to run Cogeneration system. Cost of electricity and space heating natural gas during this period averaged $0.202/kWh and $0.689/therm, respectively. The cogeneration system fuel (natural gas) was procured at the cheaper rate of $0.435/therm.
The combined energy cost of $706,064 is equivalent to a unit cost index of $4.23 per square foot.

Natural Gas is purchased from SOCAL Gas Company. Electricity is purchased from Southern California Edison (SCE). Existing electricity rate schedule are TOU-GS-3B & TOU-8-S. The overall energy costs and usage indices are summarized below in Tables 3.1A and 3.1B. Refer to Appendix-A for detailed historical energy use data.

Table 3.1A – Electricity Use Summary – EMWD

EMWD Facility Meter #	Gross Square Feet	Rate Schedule	Electricity (kWh)	Cost	kWh/ GSF	$/GSF	Site Btu/GSF	Rate ($/kWh)
V349E-005334	166,800	TOU-GS-3B	542,637	$93,755	3.25	$0.562	11,100	$0.173
V345N-001191	166,800	TOU-8-S	2,029,556	$425,510	12.17	$2.551	41,516	$0.210
TOTAL	166,800	-	2,572,193	$519,265	15.42	$3.113	52,616	$0.202

Table 3.1B – Natural Gas Use Summary – EMWD

EMWD Facility Meter #	Gross Square Feet	Rate Schedule	Natural Gas (Therms)	Cost	Therms/ GSF	$/GSF	Site Btu/GSF	Rate ($/Therm)
10795474	166,800	GN-10	57,929	$39,933	0.347	$0.239	34,730	$0.689
10842544	166,800	GT-15	337,964	$146,867	2.026	$0.880	202,616	$0.435
TOTAL	166,800	-	395,893	$186,799	2.373	$1.120	237,346	$0.472

Energy Use Patterns

Figure 3.1A to 3.1c illustrate the seasonal electricity use variation in the use of electricity. Similarly, Figure 3.1D and Figure 3.1E represents space heating natural gas and cogeneration system natural gas use, respectively. Notes are provided in the figures with respect to observations made.

Figure 3.1A – EMWD – Chiller Electricity Use

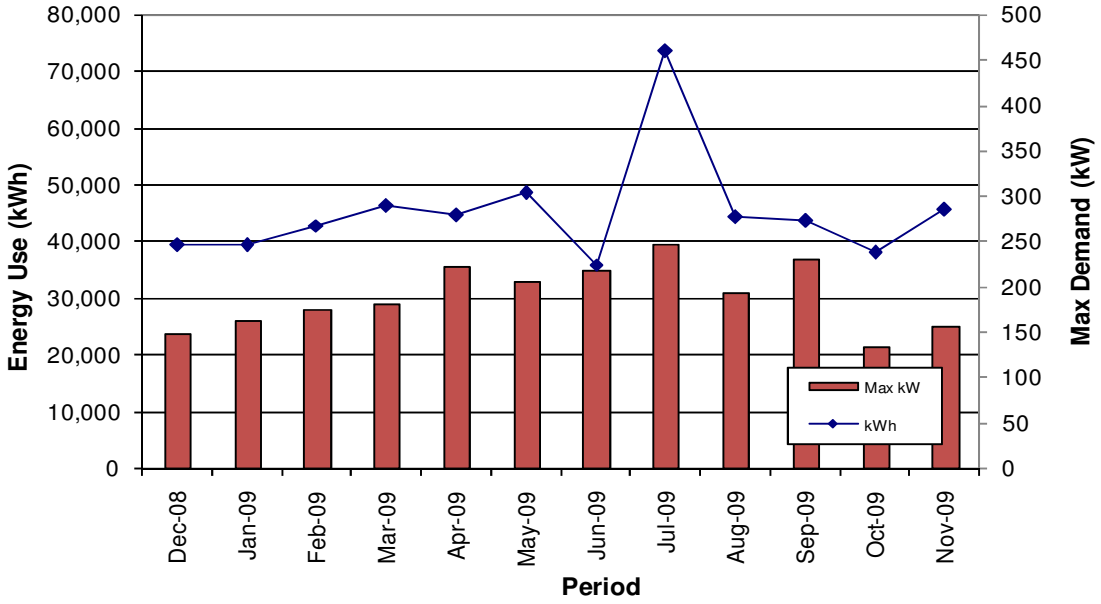

Figure 3.1B – EMWD – Building Electricity Use

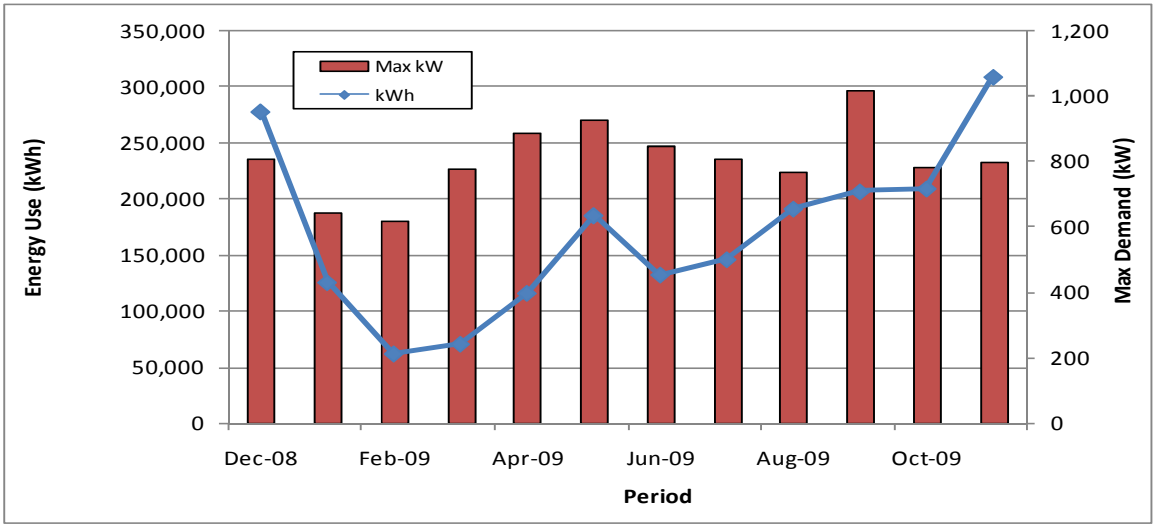

Figure 3.1C – EMWD – Onsite Electricity Generation

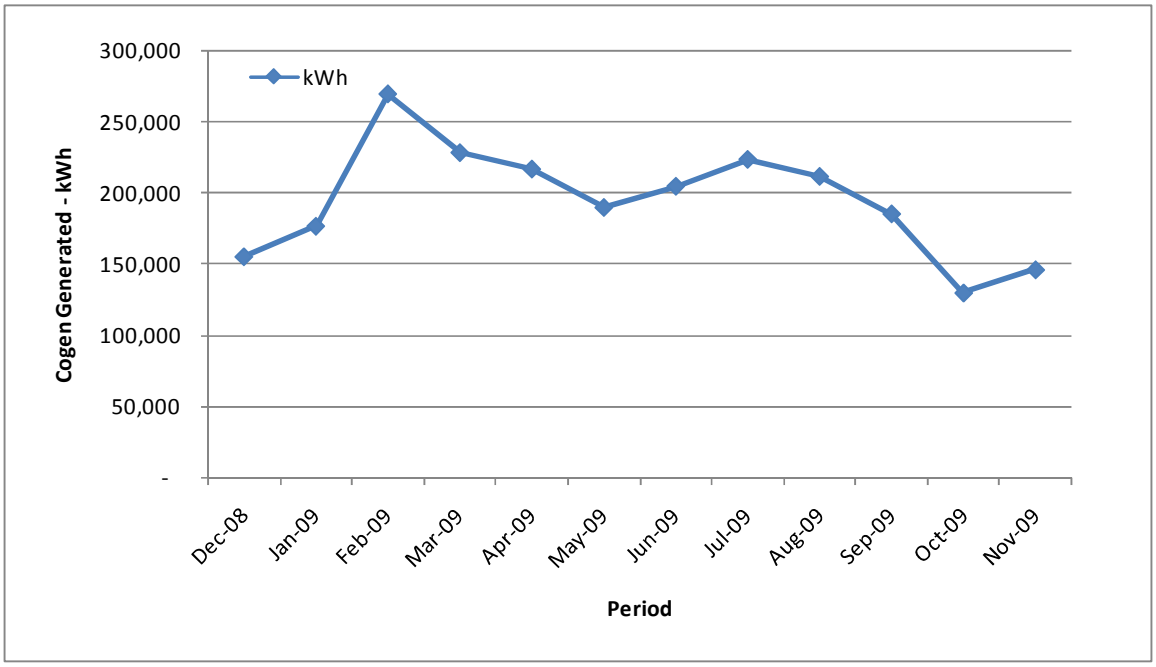

Figure 3.1D – EMWD – Space Heating Natural Gas

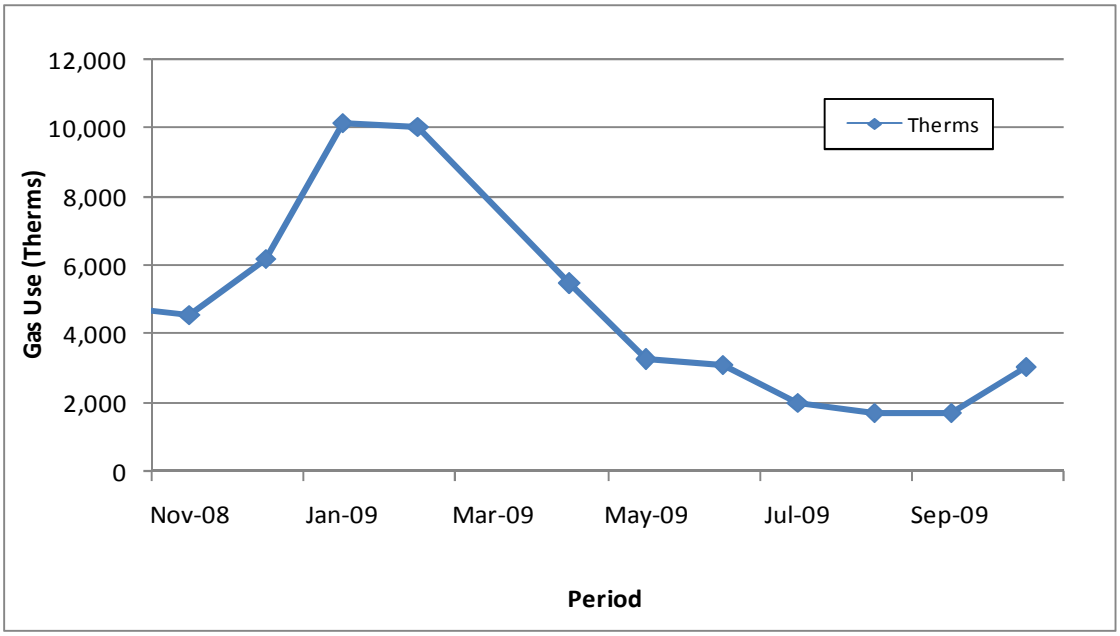

Figure 3.1E – EMWD – Cogeneration System Fuel (Natural Gas)

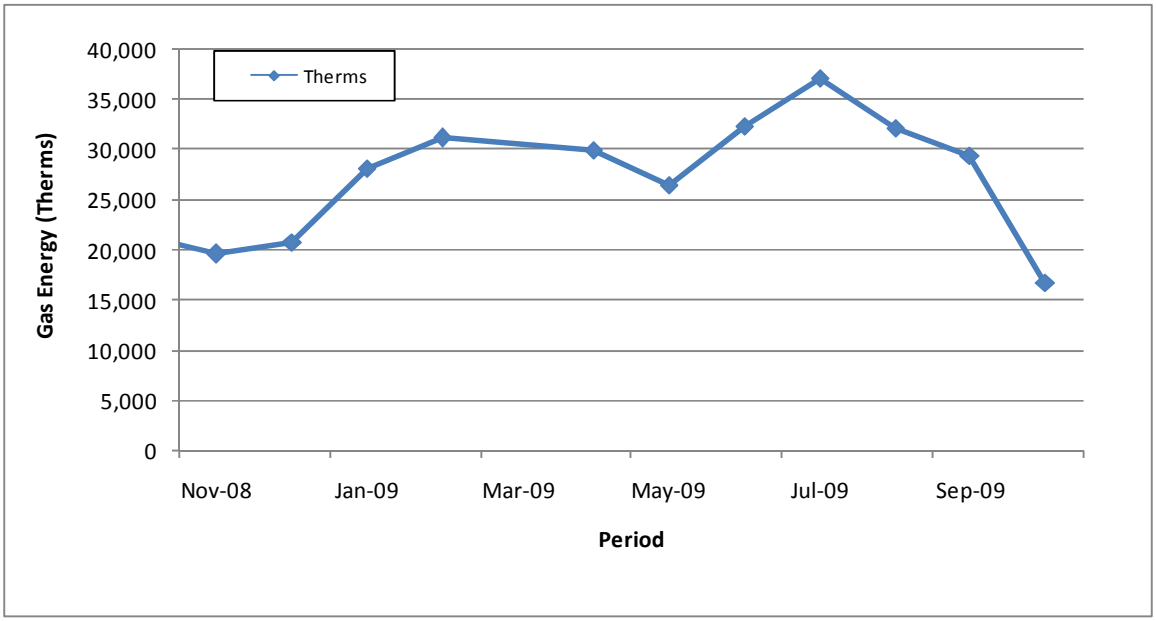

Energy Balance

Based on the inventory of lighting and HVAC equipment, and the best estimate of operating hours and efficiency ratings of the various systems, a breakdown of energy use was calculated and is presented in Appendix-B of this report. A summary of the electricity and natural gas use energy balances are shown in Tables 3.2 and 3.3, respectively. Graphical representations of the same are shown in Figures 3.2 and 3.3.[1] [2]

Electricity

Table 3.2 – Electricity Energy Balance Summary

End Use	Fans	A/C Equipment [1]	Space Heating	Lighting	All Others [2]	TOTAL kWh
EMWD	1,637,944	1,219,557	14,032	1,041,266	991,506	**4,904,304**
% of Total	*33.4%*	*24.9%*	*0.3%*	*21.2%*	*20.2%*	
TOTAL	**1,637,944**	**1,219,557**	**14,032**	**1,041,266**	**991,506**	**4,904,304**
% of Total	*33.4%*	*24.9%*	*0.3%*	*21.2%*	*20.2%*	

Figure 3.2 – Electricity Use Breakdown

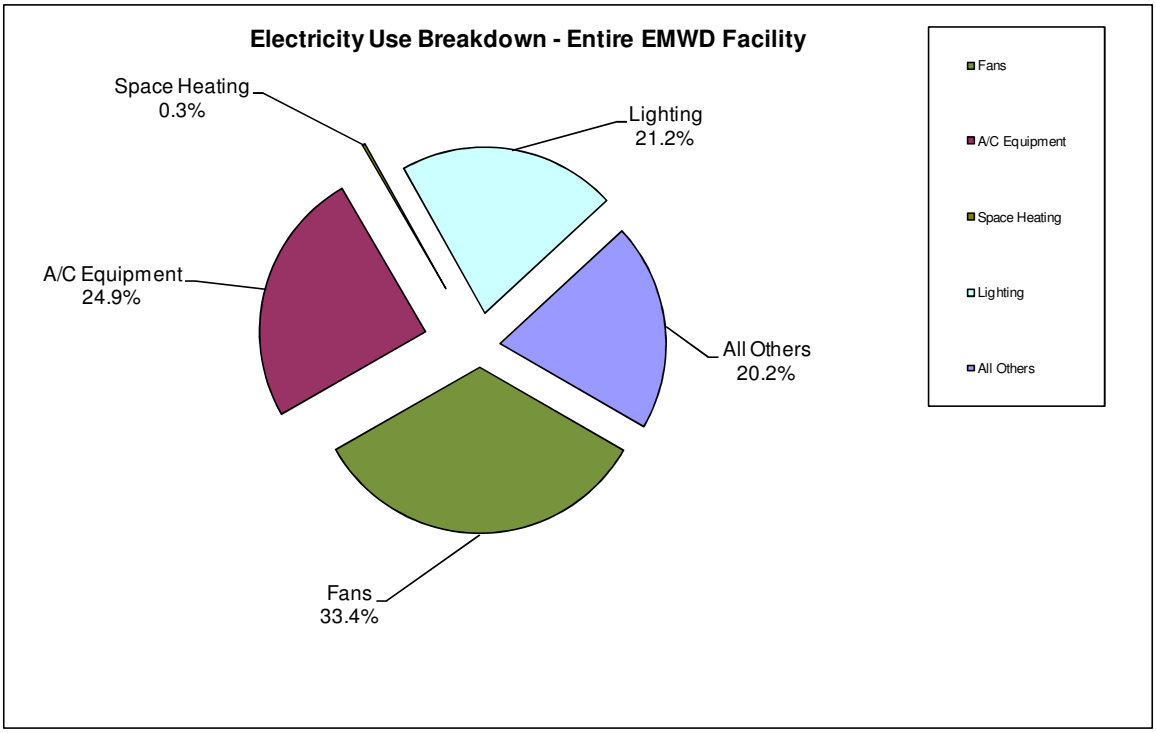

[1] Includes heat pump use during the cooling season
[2] "All Others" includes office equipment (e.g., computers, printers, copiers), kitchen appliances, irrigation pumps, plug loads, data center, cogeneration system compressors, and other miscellaneous equipment not accounted for

Natural Gas

Table 3.3 – Natural Gas Balance Summary[1]

End Use	Space Heating	All Others	TOTAL Therms
EMWD	42,615	15,314	**57,929**
% of Total	*73.6%*	*26.4%*	
TOTAL	**42,615**	**15,314**	**57,929**
% of Total	*73.6%*	*26.4%*	

Figure 3.3-Natural Gas Use Breakdown (Therms)

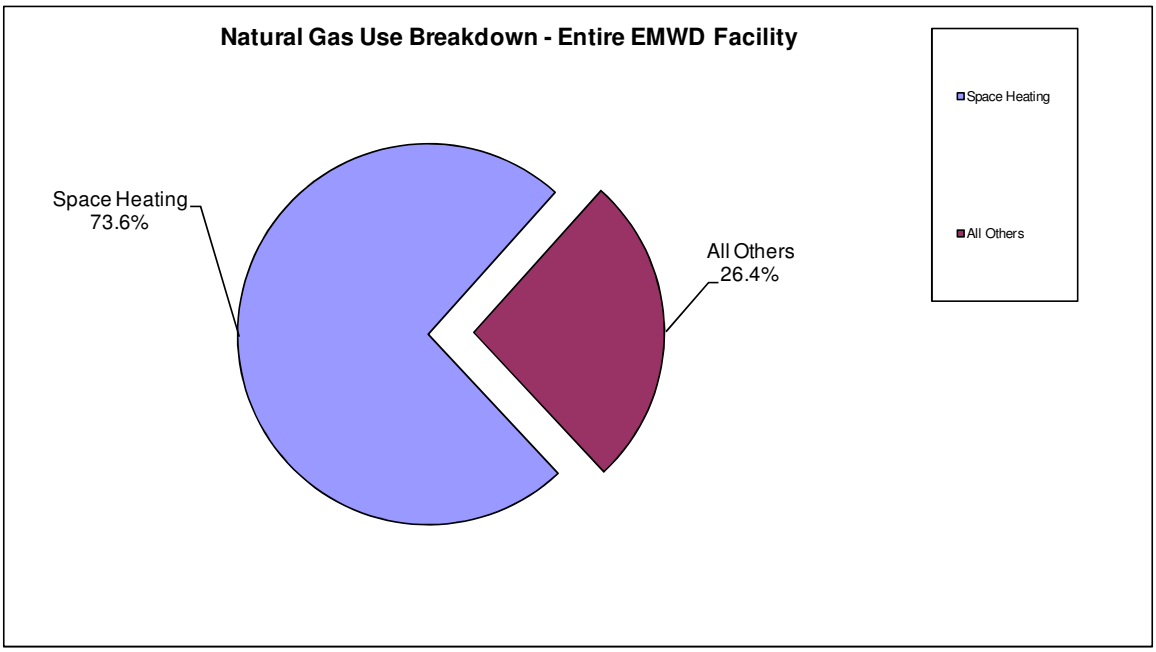

[1] "All others" includes kitchen equipment and domestic hot water

Section 4 – Energy Using Systems

Lighting Systems

Predominant lighting types at the facilities in EMWD are T12 Fluorescent fixtures. During the audit, based on some sample fixtures that were opened during the audit, typical T12 systems use energy-saving (34-watt) T12 lamps and energy-saving magnetic ballasts.

Small interior lighting spaces such as Restrooms, maintenance rooms, Hallways and some parts of Conference rooms are served by either compact-fluorescent or incandescent screw-in type lamps. Some spaces such as in the workshops and warehouse areas are lit by 4 & 8 foot linear fluorescent fixtures, High Pressure Sodium, and Metal Halide lamps. Control for the same is done by the Energy Management System (EMS).

Interior lighting controls is generally done by wall-mount switches. Wherever two or more switches are used, following wiring schemes are prevalent: *(i)* "AB Switching" where one switch is dedicated to half the number of lamps in each fixture, or *(ii)* "Patterned Switching" where one switch is dedicated to half the number of fixtures in the area.

The EMWD facilities presently employ a mixture of exterior lighting systems. Lamp-types used include a mixture of metal-halide and high-pressure sodium. Control for the same is done by (EMS). Current settings on timer are 4:30 AM to 7:30 AM. The following items are additional notes and observations with respect to lighting-systems at specific facilities.

A detailed lighting audit of every facility is presented in Appendix-F of this study.

- Lighting systems employed at the main buildings (Administration and Operations & Maintenance Building) are primarily T12 linear fluorescent fixtures. Based on some sample fixtures that were opened during the audit, typical T12 systems use energy-saving (34-watt) T12 linear lamps and energy-saving magnetic ballasts. Also, there are few T12 biaxial fixtures found mostly in hallways.

- Based on existing lighting level measurements taken in private office, conference rooms, and restrooms, there is an opportunity to retrofit existing T12 systems to efficient 28-watt T8 lamps and low ballast factor electronic ballasts. The lighting levels at these zones are found to be generally more than adequate in these areas. Although the proposed strategy will result in minimal 3% decrease in lighting level, the new system will be substantial 25% more efficient than the current T12 system.

- Fixtures in the zones such as hallway and open offices have been de-lamped to 50% of their capacity, and lighting levels are presently low in comparison to the other zones. Retrofitting existing T12 system to efficient 28-watt T8 lamps and low ballast factor electronic ballast will further decrease the lighting levels by tolerable 3%. Another strategy for the low lit zones is to retrofit existing T12 system to 28-watt T8 lamps and normal ballast factor electronic ballast. The aforementioned strategy will lead to lower 15% savings on the energy side, but will improve lighting lumens by 11%. Note that having a consistent type of T8 lamp and ballast in the facility may reduce inventory costs and make it more convenient for maintenance purposes; therefore, it's recommended to follow uniform retrofit strategy all over the facility.

- More on the same is presented in Section 5 of this study. The following table presents a general summary of existing foot-candle levels in the facility (refer to Appendix-F for detailed room-by-room light levels):

- There are about 82 incandescent 75-watt fixtures spread all over the facility. It's recommended to retrofit the same with 13-watt compact fluorescent fixtures.

- Various small restrooms throughout the facility have screw-in compact fluorescent lights. The wattage for these fixtures ranges between 13-watt to 26-watt.

- No occupancy sensors for lighting control are presently in use at the facility. Rooms within the facility are all accessible using a common corridor. The corridors are lit using 2x4 and 2x2 biaxial Troffer fixtures. Based on observations, there are many occasions where corridors remain unoccupied (or without traffic) for extended periods of time. Such scenarios present the opportunity for occupancy sensor control of lights. This study proposes use of sensors in areas like private offices, conference rooms, restrooms, and corridors.

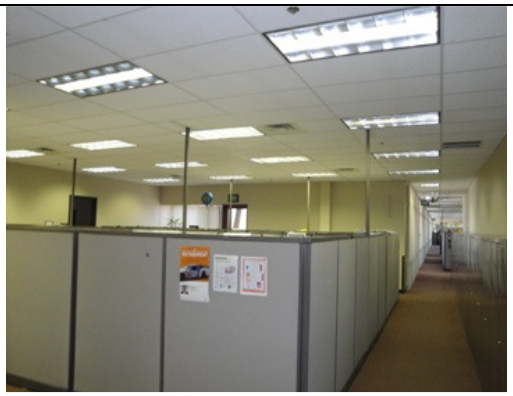
View of Open office lighting

Typical corridor lighting

- Workshops are illuminated with a combination of metal halide lamps of 1000W, 400W and 250W capacity, which, can be retrofitted with 54W T5 high output fixtures resulting a decrease in energy consumption and still maintaining comparable lighting levels. Another option is to replace metal halide fixtures with the low maintenance induction lamps. Induction lamps are ideally suited for high-ceiling applications where the lamps are difficult, costly or hazardous to access. An induction lighting system provides a longer-life lamp, superior lumen maintenance, and the crisp white light currently available from similar wattage metal halide lighting systems. Please see section 5 for details. Controls for the same are done by EMS system.

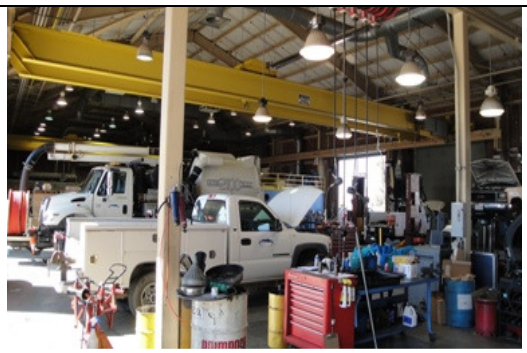
View of Workshop lighting

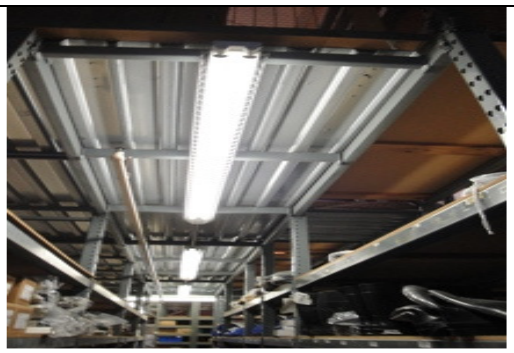
Warehouse lighting

- Storage racks in the warehouse and few zones in workshops are illuminated with 8 foot strips of 96-watts T12 lamps. These areas are well illuminated; therefore, it's recommended to retrofit the same using retrofit kit (8-foot to 4-foot retrofit kit) to two 28-watt lamps and low ballast factor electronic ballast.

- External lighting system comprises of Metal-Halide and High Pressure Sodium fixtures, the wattage on the same ranges between 50 to 400 watts. Controls for the same are EMS based and almost all circuits are on photocells.

View of files storage room lighting	Conference Room lighting

Heating, Ventilation, and Air Conditioning (HVAC) [1]

Administration and Operations & Maintenance Buildings (O&M):

Administration and O&M buildings are served by a set of three chillers (Arranged in load sequence):

1. York single stage absorption chiller (up to 235 tons capacity)
2. Carrier air cooled electric screw-chiller (130 tons)
3. Trane air cooled electric screw-chiller (240 tons)

Absorption chiller is used as the primary equipment for cooling, however, in cases where the cooling load is higher than the capacity of the primary equipment; the electric chillers follow the excess load to achieve the required cooling.

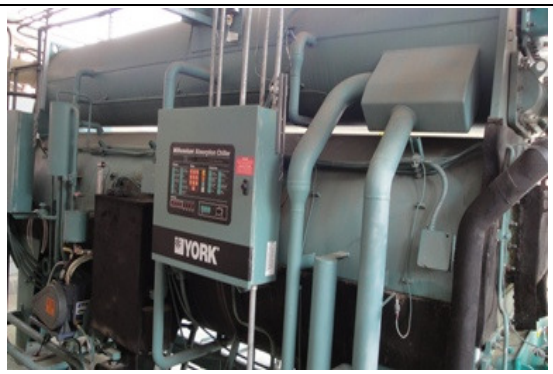

York Absorption Chiller

Carrier Electric Chiller -130 Tons

The absorption chiller is tied to a matching capacity cooling tower located adjacent to the central plant. Condensing water to and from the absorption chiller is circulated to a cooling tower through a 30-hp circulation pump. The cooling tower is equipped with a 15-hp premium efficiency fan, which is connected to a variable frequency drive for an energy efficient operation. Heat required by the absorption chiller to generate cooling is supplied by eight 60kW-Capstone turbines installed at the facility; more on the same is discussed later in this section.

The chilled water distribution for the primary loop is done by the (1) 7.5-hp, (2) 5-hp, and (2) 10-hp water circulation pumps for the 235-tons absorption chiller, 130-ton air cooled chiller, and 240-ton air cooled chiller, respectively; the primary pumping provides the means for the constant volume pumping. Only absorption chiller primary pump has VFD.

There are two 25-hp secondary pumps for chiller water hydronic system, which works in lead and lag setup; i.e. the second pump comes up when first pump is at 90% load. The aforementioned secondary pumps have VFD based controls.

The existing hot water system for the Administration and Operations & Maintenance Building consists of two boilers ("TELEDYNE LAARS make") and six pumps. The total capacity for the heating system is 3,495 MBH (1,825 MBH and 1,670 MBH). The bigger 1,825 MBH boiler has been replaced recently; however, the other 1,670 MBH is the original equipment and nearing its useful life. Hot water hydronic system consists of four 3-hp secondary pumps, none of which have a VFD configured. As part of this energy efficiency study, it is recommended to put the VFD on the above said pumps and replace old space heating boiler with the energy efficient boiler. More on the same is presented in section 5.

[1] A list of all HVAC units and corresponding energy use is detailed in Appendix-B

View of the old space heating boiler

Hot water circulation pumps

The air-side of the system consists of variable-volume air handling units. Air handling units (AHU's) are each equipped with chilled water coils; there is no preheating at the air handler level. Based on mechanical drawings, there are a total of six air handling units in the building. All AHU's are utilizing VFD's. The central AHU fan supplies cool air to the VAV reheat boxes and hydronic reheat coils is used to control discharge temperature at the zone. Only perimeter zone VAV boxes are equipped with reheat coils. Economizing capability exists for all of the AHU's; however, there is no demand ventilation currently in effect. Also, the "Duct Static Control" strategy is in place; the calculated duct static pressure set point ranges between the "Max" and "Min" value, based on the signal generated by different VAV zones. The VFD signal modulates in order to maintain the "Calculated Duct Static Pressure Set point". More on the controls is discussed in section 5 of this study.

Other HVAC equipment for the Operation & Maintenance building includes one condensing unit each for the telephone room and center control room. Also, there is a heat pump serving the security area.

Controls on all the mechanical equipment, hydronics, and field devices (including temperature and pressure sensors) are provided by direct digital controls based EMS system. The HVAC systems are controlled by an out-dated EMS used for scheduling and setting/monitoring the supply air temperature. The EMWD personnel are experiencing problems with the EMS controls and are interested in either installing a new EMS or upgrading the functions of the existing EMS so more control and diagnostic functions can be accomplished. Also, the existing EMS system does not have the capability to control the absorption chiller and cogeneration system directly.

Special types of fume hoods are installed in the laboratory area of the Operations and Maintenance building. Basic purpose of these fume hoods are exhaust of fumes or gases generated during several experiments in the laboratory, however, there is a provision of closing and opening the sash to avoid harmful fumes getting out to the open working area. Five such systems are installed powered by a 5 HP fan attached to each system.

View of the laboratory connected to the fume hood exhaust

Operations & Maintenance Shops

The shop buildings are an independent part of the EMWD facility which is not served by chillers and boilers that serve the administration and operations office buildings.

Heat pumps serve multiple areas throughout the shop floor, including offices, and workshops. Also, the space cooling need for the shop area is satisfied by the floor mounted evaporator coolers. Space heating is provided by direct fired units, radiant heaters and unit heaters, all of which use natural gas for the heat generation. Direct fired units and unit heaters are connected to fans that force hot air in to the space.

The Auto Shop & Mechanical Shop have big garage doors. Heating systems consist of gas-fired forced-air unit heaters. The District is encouraged to monitor the operation of the heating systems and investigate possible deficiencies associated with garage doors being open in conjunction with heaters on. Given that the walkthrough was performed in the summer, Digital Energy was not able to identify or observe typical trends during heating modes. Energy saving option addressing this issue is presented in Section-5 of this study.

Evaporator Cooler serving the Workshop area

Direct Fired Unit

Cogeneration System

The eight 60-kW capstone micro-turbines operating on natural gas provides heat input to the absorption chiller for cooling purposes as well as generates electricity for the building's electric demands. This electricity produced is used by the buildings for lighting, HVAC loads, data center loads, and various other plug loads.

The cogeneration system is designed to operate as an electric load following system. The waste heat recovered from turbine flue gas is used to run a 230 YORK absorption chiller; however, due to the limited heat generation the maximum absorption chiller output is 137 tons. The overall calculated thermal efficiency of the existing cogeneration system is 66%. Also, because the cogeneration system is following the facility electric load, the absorption chiller output also fluctuates. The EMWD is interested in an analysis to maximize the energy savings from its cogeneration and absorption chiller operations. The EMWD purchases natural gas for the cogeneration system at a non-core rate which is less expensive than the core rate. One of the options is to add additional turbines or add direct firing capability to increase the absorption output.

Presently, the cogeneration system follows the building load regardless of the utility rate schedule at any given hour. Two scenarios are discussed in this report:

1. Demand based logic which will dictate operational mode with lowest variable operation cost.
2. Addition of micro-turbines to maximize electricity generation and absorption chiller output.

60-kW Micro-turbine	Gas Compressor

Data Center

IT Equipment

The server room consists of about 28 42U racks, and each rack holds around 2 to 8 servers. The UPS system consist of a 160 kW UPS's in the parallel redundant configuration (N+1 System). Considering the IT maximum critical load of only 45 kW, UPS system is highly oversized and lightly loaded (approximately 15% each).

HVAC

The HVAC system at the Data Center consists of the of two chilled water based CRAC units with constant speed fans (10 hp each). The cooling for the two CRAC units is 25 tons and 30 tons, respectively. The chilled water for the same is provided by the common chilled water loop. Air distribution is under floor with ceiling return. Floor mounted diffusers are installed in order to replace the hot air with cool conditioned air from the bottom up direction. In conjunction to CRAC units, the server room is conditioned by a 5-ton heat pump.

No economizing capability is in place. Presently, no cold or hot aisle containment is in place; therefore, the air mixing leads to the inefficient system. There is an opportunity to implementing hot aisle containment and eliminating mixing allowing higher supply air temperature. Consequently, the chilled water can be reset to higher temperature, which leads to higher chiller efficiency.

CRAC unit

UPS system nameplate

Section 5 - Energy Project Summaries

Lighting Project L-1**:** **(a)** Retrofit all existing linear T12 fluorescent fixtures with 28-watt T8 lamps and low ballast factor (LBF) electronic ballasts

(b) Retrofit all existing biaxial T12 fluorescent fixtures with 32-watt T8 lamps and low ballast factor (LBF) electronic ballasts

Project Description

Predominant lighting types at the facilities in EMWD are T12 Fluorescent fixtures. During the audit, based on some sample fixtures that were opened, typical T12 systems use energy-saving (34-watt) T12 lamps and energy-saving magnetic ballasts. Most existing T12 fluorescent fixtures at the facility make use of energy saving 4-foot linear lamps along with few 8-foot linear lamps and biaxial lamps. For better efficiency and improved color rendition, T12 fixtures can be effectively retrofitted to new T8 systems.

This project proposes **(a)** retrofitting the old linear T12 fluorescent lamps with new 28-watt T8 linear lamps and retrofit biaxial T12 fluorescent lamps with new 32-watt T8 biaxial lamps , **(b)** replacement of standard ballasts with new low-ballast factor ballasts (linear and biaxial fixtures), and **(c)** the general cleaning of each fixture for improved lighting performance. **Note:** For all existing 8-foot lamp fixtures, the job will entail installation of an 8-foot to 4-foot fixture retrofit kit. Unless otherwise specified, all retrofits shall be done on lamp-for-lamp basis (i.e., no de-lamping).[2] See Appendix-F for a detailed room-by-room audit.

Although a reduction in light levels is tolerable, lighting levels are expected to be maintained with the conversion to LBF ballasts. Based on ballast manufacturer data, a fixture operating with new LBF and 28-watt T8 lamps will have comparable lumens to that of a T12 magnetic system. Table 5.1 below gives a quick comparison of fixture wattages and fixture lumens for baseline and proposed scenarios.

- The Baseline Case is what we typically find in buildings that still use T12 technology. This system is currently what is employed in the subject areas of this project.

- The Proposed Case is one of the most efficient configurations available in the industry today. As shown, such a system sacrifices some lumens for a reduction in watts. If implemented, the District can save approximately 61 watts per 4-lamp fixture (vs. Baseline).

Note that having a consistent type of T8 lamp and ballast throughout the building may reduce inventory costs and make it more convenient for maintenance purposes. With limited space in storage/stock rooms, maintenance personnel usually find it a burden to carry multiple types of lamp and ballasts. It is also typical that when a lamp burns out, staff will replace it with any available lamp found in the stock room (irrespective of originally specified lamps). Accordingly, it's recommended that all existing 4-foot fluorescent lamps throughout the building be phased out and replaced with a consistent type of T8 energy-saving lamp (e.g., 28-watts).

[2] In cases where existing T12 lamps are burned out, work shall also include replacement of burned-out lamps

Table 5.1 – Comparison of baseline and proposed 4-foot fixtures

	Baseline (Energy Saving T12)	**Recommended Strategy** (T8 System)	**Alternate Strategy For The Low Lit Areas**
	4-lamp fixture with 34-watt T12 lamps and energy saving magnetic ballast	4-lamp fixture with 28-watt T8 lamps and low ballast factor electronic ballast	4-lamp fixture with 28-watt T8 lamps and normal ballast factor electronic ballast
LAMP DATA [1]			
Lamp Watts	34	28	28
Initial Lamp Output (Lumens)	2,650	2750	2,750
Design Lamp Output (Lumens) [2]	2,280	2590	2,590
Lamp Lumen Maintenance (%)	86%	94%	94%
Lamp Life (Hours)	20,000	20,000	20,000
CRI	70	85	85
SYSTEM DATA			
Lamps per Fixture	4	4	4
Ballast Factor	0.90	0.77	0.88
Fixture Efficiency [3]	90%	90%	90%
Initial System Lumens	8,586	7,623	8,712
Mean System Lumens	7,387	7,179	8,205
Lumens Change	-	**-3%**	**11%**
Fixture Input Power (Watts)	144	83	95
Watt Savings	-	**42%**	**34%**
Design Lamp Efficacy (Lumens/Watt)	63	125	109

[1] Data gathered from lamp and ballast manufacturers including Sylvania and General Electric

[2] At 40% Rated Life

[3] Fixture efficiency is an estimate based on typical values. Efficiency varies by fixture design, condition, etc.

Implementation Scope of Work

1. Remove existing lamps and ballasts. Separate and store removed ballasts into “PCB” and “non-PCB” categories. Only ballasts manufactured prior to 1979 contain PCB. Follow local, state, federal, and industry recommended guidelines associated with storage, transport, and waste disposal of lamps and ballasts.

2. Clean the existing fixtures, including all reflective surfaces inside the fixture and lens. Use an approved cleansing agent that is non-toxic.

3. **Linear fixtures**: Wherever specified (generally strip fixtures), install a retrofit kit and replace every one 8-foot T12 lamp with two new 4-foot T8 lamps (28-watts). For 4-foot linear fixtures, install new T8 florescent lamps (28-watts) and low-ballast factor electronic ballasts. A 4-lamp system with 28-watt lamps and low-watt ballast shall use no more than 83 watts; a 2-lamp system shall use no more than 42 watts.

4. **Biaxial fixtures:** Install new T8 low-ballast factor electronic ballasts. A 2-lamp system with 32-watt lamps and low-watt ballast shall have no more than 48 watts.

5. When retrofitting to low-watt ballasts, it’s recommended to first retrofit a few fixtures in a sample area to verify that minimum lighting levels are maintained. See summary of IES recommended lighting levels in Table 5.3.

6. Conduct retrofits so as to preserve existing "A/B" switching arrangements, For instance, newer buildings are typically designed for multi-level lighting using "A/B" circuits. Wherever

possible, use tandem wiring to minimize the number of new ballasts. As an example, two fixtures (within close proximity) that have lamps on the same circuit can share common ballast. In the event the fixtures are not adjacent, use a wiring harness (also called a "whip" in the industry).

7. Where fixtures are tandem wired, apply "Tandem" stickers for the benefit of future maintenance staff, to indicate the location of the ballast.

Appendix-C and Appendix-F present detailed lighting retrofit data and calculations.

Analysis Summary

Table 5.2 – Analysis summary of proposed Lighting Project L-1

# of Fixtures	kW Saved	kWh Saved	Rate ($/kWh)	Project Cost ($)	Cost Savings ($)	Payback Period without Incentive (years)	Approx. Incentive ($)	Project Costs w/ Incentive ($)	Payback Period with Incentive (years)
1,533	61.5	247,366	$0.140	$120,348	$34,631	3.5	$18,518	$101,829	2.9

Recommended Lighting Levels

The following table denotes illumination guidelines for some typical spaces encountered in commercial buildings (as recommended by the Illuminating Engineering Society of North America – IESNA). If any of the lighting retrofits presented in this study are implemented, measurement and testing of the space (before and after the retrofit) should be done to ensure the changes adhere to the illumination guidelines.

Table 5.3 – IES Lighting Illumination Guidelines

Space Category	Foot Candles	Illuminance on Vert. or Horiz. Plane
General		
Stairways, Corridors	5	H
Restrooms	5	H
Conference Rooms	30	H
Kitchen	50	H
Offices		
Filing	50	H
Private Office	50	H
General Office with Handwritten Tasks	30	H
Lobbies, Lounges, Reception Areas	10	H
Copy Rooms	10	H
White Board	5	V
Educational Facilities		
General Classroom (Reading)	30-50	H
White Board	5	V
Chalk Board	50	V
Industrial		
Inactive Storage	5	On Plane
Active Storage	10	On Plane
Motor and Equipment Observation	30	On Plane
Control Panel Observation	10	On Plane

Lighting Project L-2: Replace incandescent fixtures with screw-in compact fluorescent

Project Description

Some zones, which include open offices, conference rooms, and control rooms in the EMWD, are currently making use of incandescent lamp. There are an estimated 82 lighting fixtures that still use incandescent lamps; the lamp wattage on the same is approximately 75-watts. Typically, such lights can be replaced with screw-in compact fluorescent lamps (CFL).

Implementation Scope of Work

1. Remove existing incandescent lamps and install new screw-in compact fluorescent lamp, as specified.

2. See Appendix-F for locations and lamp wattages of all proposed retrofits.

Analysis Summary

Table 5.4 – Analysis summary of proposed Lighting Project L-2

# of Fixtures	kW Saved	kWh Saved	Rate ($/kWh)	Project Cost ($)	Cost Savings ($)	Payback Period without Incentive (years)	Approx. Incentive ($)	Project Costs w/ Incentive ($)	Payback Period with Incentive (years)
82	4.7	17,046	$0.140	$1,875	$2,386	0.8	$1,322	$553	0.2

Lighting Project L-3 Provide occupancy based motion sensors to various rooms

Project Description

Occupancy sensors allow lights to be automatically turned off when no motion is detected in a given space. These are ideal controls for such areas as restrooms, break rooms, conference rooms, and large "public use" areas where no one typically takes responsibility for turning off the lights.

Also, rooms within the facility are all accessible using a common corridor. The corridors are lit using 2x4 and 2x2 biaxial Troffer fixtures. Based on observations, there are many occasions where corridors remain unoccupied (or without traffic) for extended periods of time. Also, presently, there are no motion sensors in place for the private offices, conference room, and restrooms. Such scenarios present the opportunity for occupancy sensor control of lights; this study proposes use of sensors in areas like private offices, conference rooms, restrooms, and corridors. This project assumes 20% savings in lighting operational hours.

Implementation Scope of Work

1. Two types of sensors are available: those that mount directly on the wall in place of an existing switch, and those that mount on the ceiling. Wall-type is acceptable where the sensor has a clear line of sight to the occupants in that area. For larger zones, ceiling-mount sensors are more appropriate.

2. Select a dual-technology (DT) sensor that is designed based on both ultrasonic (US) and passive infrared (PIR) technology. PIR sensors respond to movement of infrared sources such as human bodies in motion. As the name suggests, they are passive, meaning that they do not send out a signal (i.e., sensors must have a direct line-of-sight to the motion). In contrast, ultrasonic sensors emit high frequency sound waves and trigger lights depending on shifts in the frequency of the reflected sound. Unlike PIR sensors, US occupancy sensors are sensitive to motion of inanimate objects such as blowing curtains. These sensors do not need a clear line-of-sight to an occupant and are preferred for spaces with partitions, tall cabinets, or other obstacles. Appendix-E includes catalog cut sheets of sensors to be considered.

3. Locate the circuit or the switch-leg that energizes the lights in a given area.

4. Install a switch-pack(s) (i.e., a relay) in the circuit. This relay will be connected to the occupancy sensor.

5. Install the sensor such that it has a line of sight with the area being controlled.

6. Connect a low voltage wiring between the sensor and the switch pack. For very large areas, two sensors can be used to monitor the entire zone. Both the sensors can be connected to the same switch-pack.

7. Where multiple switch-legs exist, use multiple switch-packs.

8. Adjust sensor timing to a minimum of 20-minutes. Lower time duration should be avoided since it could affect lamp life, due to very frequent switching.

Analysis Summary

Table 5.5 – Analysis summary of proposed Lighting Project L-3[1]

# of Sensors	kW Saved	kWh Saved	Rate ($/kWh)	Project Cost ($)	Cost Savings ($)	Payback Period without Incentive (years)	Approx. Incentive ($)	Project Costs w/ Incentive ($)	Payback Period with Incentive (years)
166	n/a	29,893	$0.084	$56,436	$2,515	22.4	$1,495	$54,941	21.8

[1] Project savings are calculated post implementation of project L-1 & L-2

Lighting Project L-4 Replace all existing high-bay metal-halide fixtures in workshops and warehouses with T5 high-output linear fluorescent fixtures

Project Description

Workshop areas, which include mechanical shop, auto shop, and metal shop, are presently lighted with combination of high-bay metal-halide fixtures containing 250-watt to 1000-watt lamps. Fixture mounting heights in all facilities are approximately 25-feet.

Although high-intensity discharge (HID) light sources such as these have long dominated the market for high-bay interior lighting, recent fluorescent technology developments have made high-output fluorescent lighting a more cost-effective choice. This measure proposes a one-for-one replacement of existing 250-watt and 400-watt metal-halide fixtures with new fixtures designed for three or four High Output T5 lamps and normal ballast factor electronic ballasts.

Table 5.6 gives a quick comparison of fixture wattages and fixture lumens for existing and proposed scenarios. For example, the proposed 4 lamp T5 High Output system lighting system retrofit for the 400-watt Metal Halide fixture will result in a 4% increase in light output and a 49% reduction in energy.

Table 5.6 – Wattages and Lumen comparison of high-bay fixtures

	Metal Halide (Standard 250W)	**T5 HO** (3-lamp, linear)	**Metal Halide** (Standard 400W)	**T5 HO** (4-lamp, linear)
LAMP DATA				
Initial Lamp Output (Lumens)	20,500	5,000	36,000	5,000
Design Lamp Output (Lumens) [2]	17,000	4,750	23,500	4,750
Lamp Lumen Maintenance (%)	65%	95%	65%	95%
Lamp Life (Hours)	10,000	20,000 - 24,000	20,000	20,000 - 24,000
SYSTEM DATA				
Lamps per Fixture	1	3	1	4
Ballast Factor	1.0	1.0	1.0	1.0
Fixture Efficiency [3]	70%	90%	70%	90%
Initial System Lumens	14,350	13,500	25,200	18,000
Mean System Lumens	11,900	12,825	16,450	17,100
Fixture Input Power (Watts)	294	182	458	234
Design Lamp Efficacy (Lumens/Watt)	58	78	51	81
CRI	65	85	65	85
% Reduction in watts	n/a	38%	n/a	49%
% Increase in Lumens	n/a	7%	n/a	4%

[1] Data gathered from lamp and ballast manufacturers including Sylvania and General Electric

[2] At 40% Rated Life

[3] Fixture efficiency is an estimate based on typical values. Efficiency varies by fixture design, condition, etc.

Photometric Analysis

By use of lighting design software (Visual), a photometric analysis was performed on the existing and proposed lighting systems at all subject areas of this project. A summary of results indicating before and after foot-candles and overall power densities are presented below:

	Existing	*Proposed Option*
Fixture Type	MH-400W	4-Lamp F54T5-HO
# of Lumainaires	15	15
Power-Density (Watt/Sq. ft.)	1.56	0.9
Average Foot-Candles at Design Lumens [1]	34.9	35.3
IES Recommended Foot Candles	20 - 30	

[1] Average lumens are at mean rated lumens and account for light loss factor (i.e., fixture efficiency, dirt, etc. Existing case foot-candles coincide with the actual measurement taken during walkthrough (+/- 10%)

Note: T5 high output fixtures are considered as high bay fixtures and known to cause glare if installed below the height 25 ft; however, in the subject areas fixture mounting height is 25 ft. or higher.

As an example, Figures 5.1A and 5.1B illustrate the horizontal illumination pattern (at a work-plane height of 2.5-ft) for the existing-case and proposed-case at the Purchasing Warehouse. Refer to Appendix-C for all photometric analyses performed.

Figure 5.1A – Photometric analysis of Purchasing Warehouse – Existing Case (MH-400W)

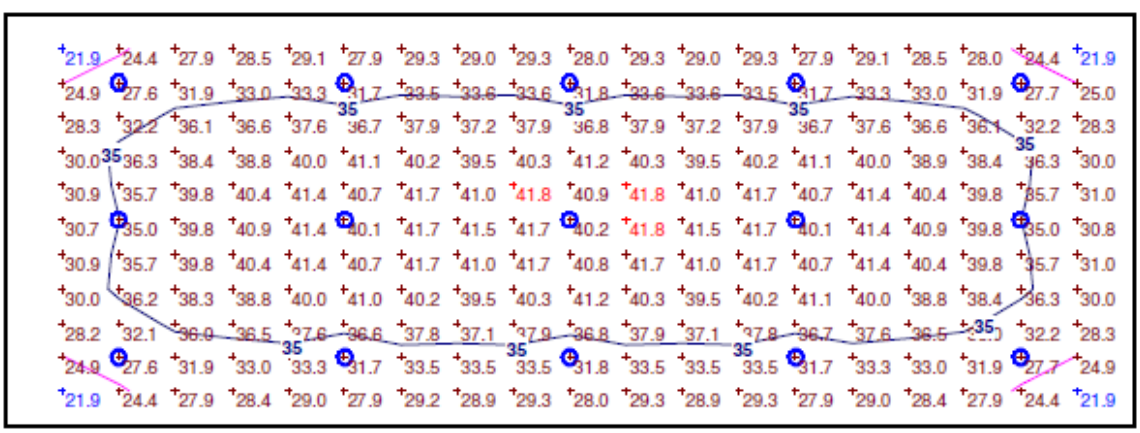

Figure 5.1B – Photometric analysis of Purchasing Warehouse – Proposed Case (4-F54T5-HO)

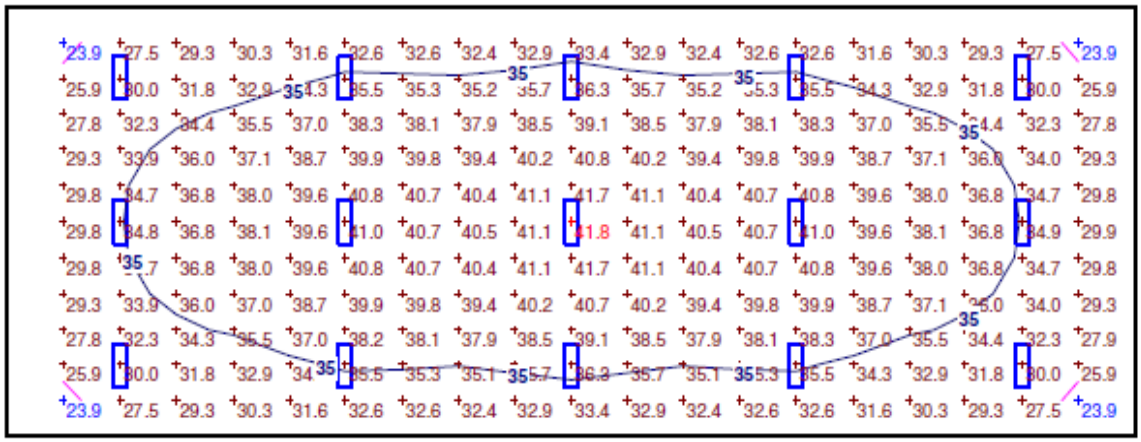

Implementation Scope of Work

1. The EMWD is recommended to have this aspect of work designed by an engineer or an experienced contractor who is familiar with high-bay fixture retrofits. Today's industry practice suggests the replacement of each 400-watt metal-halide fixture with four T5 high output lamps and normal ballast-factor ballasts. Similarly, norm is to replace 250-watt metal halide fixture with three T5 high output lamps and normal ballast-factor electronic ballasts. Although this project suggests 4-lamp fixtures, it is recommended to consult a lighting contractor to determine if 3-lamps would be better suited. [1]

2. Replace each metal-halide fixture with the selected high-bay fixture (one-for-one). Fixture shall use 54-watt T5 high output lamps and normal ballast factor electronic ballasts.

3. If deemed necessary, provide fixture guards for lamp protection. Guards shall withstand impact from forces such as incoming trucks and other heavy duty equipment.

4. Determine the best suited wiring arrangement (A/B, patterned, etc.).

5. Provide dedicated light switches.

Analysis Summary

Table 5.7 – Analysis summary of proposed Lighting Project L-4

# 0f Fixtures	kW Saved	kWh Saved	Rate ($/kWh)	Project Cost ($)	Cost Savings ($)	Payback Period without Incentive (years)	Approx. Incentive ($)	Project Costs w/ Incentive ($)	Payback Period with Incentive (years)
80	13.7	44,408	$0.140	$48,082	$6,217	7.7	$3,590	$44,491	7.2

[1] Note that if 3-lamp fixtures are used (one-for-one retrofit), savings will be significantly more than what is indicated in the economic analysis.

Alternate Option

As an alternate option to the T5 fluorescent fixtures proposed above, the District may also want to consider induction lighting fixtures. The following describes the main advantages of such a system and potential implementation costs and savings vs. other systems.

Although induction lighting systems come in different shapes and sizes, the operating principles are essentially the same. They include a high frequency generator, a power coupling, and a glass lamp housing (or discharge bulb). See sample fixture and lamp types below.

Induction lamps are ideally suited for high-ceiling applications where the lamps are difficult, costly or hazardous to access. An induction lighting system provides a longer-life lamp, superior lumen maintenance, and the crisp white light currently available from similar wattage metal halide lighting systems. These product advantages could translate into dollar savings when considering maintenance, labor, and replacement lamp cost of existing metal halide lighting fixtures. In most cases the payback in maintenance savings will more than offset the initial cost of the system.

Circular induction high-bay dome fixture

Tubular-type induction lamp

Induction System Advantages:

- Instant On/Off
- Ultra-Long Life – 100,000 hour rated life
- Low Total Cost of Ownership - Reduced energy and maintenance costs
- Color Performance - +80 CRI
- Stable Light Output – No variation over a wide range of temperatures and voltage

Induction System Drawbacks:

- High system costs – Can cost twice as much as a fluorescent fixture or metal halide installation
- Induction lamps require fixtures specifically designed for induction lighting systems. Accordingly, retrofit option are somewhat limited
- When there is a failure, you need to change the lamp and the ballast (called a generator for induction) at the same time.

Table 5.8 below is a comparative summary of the existing 400-watt metal halide system alongside two popular retrofit options: (a) fluorescent T5 High-Output, and (b) 250W induction lamp

Table 5.8 – Comparison of MH-400W, 4-F54T5HO, and Induction 250W systems

	Baseline	Option A	Option B
	Metal Halide (Standard 400W)	**T5 HO** (4-lamp, linear)	**Induction** (1-lamp)
LAMP DATA			
Lamp Watts	400	54	250
Initial Lamp Output (Lumens)	36,000	5,000	27,200
Design Lamp Output (Lumens) [2] [3]	23,500	4,750	22,304
Lamp Lumen Maintenance (%)	65%	95%	82%
Lamp Life (Hours)	20,000	20,000-24,000	100,000
SYSTEM DATA			
Lamps per Fixture	1	4	1
Ballast Factor	1.0	1.0	1.0
Fixture Efficiency [4]	70%	90%	75%
Initial System Lumens	25,200	18,000	20,400
Mean System Lumens	16,450	17,100	16,728
Fixture Input Power (Watts)	458	234	263
Design Lamp Efficacy (Lumens/Watt)	51	81	85
CRI	65	85	80-90
% Increase in Lumens with respect to Baseline	n/a	4%	2%
% Decrease in Power Consumption (Watts) w.r.t baseline	n/a	49%	43%

[1] Data gathered from lamp and ballast manufacturers including Sylvania and General Electric
[2] Metal Halide & T5 fluorescent: at 40% rated life
[3] Induction: at 20,000 hours (or 80% rated life); 70% output at 60,000 hours (or 40% rated life)
[4] Fixture efficiency is an estimate based on typical values. Efficiency varies by fixture design, condition, etc.

Although the economics of an induction lamp project depends on the current utility rate in effect, the main economic driver is the labor cost savings derived from the longer lamp life of the induction lamps and reduced frequency of replacement. While induction lamps would also provide modest energy savings, the project would be difficult to justify on the basis of energy savings alone unless maintenance savings and labor savings are also considered. Accordingly, the analysis shown below illustrates the potential savings from reduced maintenance cost over the life of the system. Again, the three systems compared are (a) 400W metal halide, (b) 4-lamp FL T5 HO, and (c) 250W induction lamp.

Table 5.9 – Total Life Cost Comparison of MH-400W, 4-F54T5HO, and Induction 250W

	Metal Halide (Standard 400W)	**T5 HO** (4-lamp, linear)	**Induction** (1-lamp)
Usage Hours			
Use Hrs per Day	12	12	12
Days per Year	235	235	235
Annual Operating Hours	3,250	3,250	3,250
Life of System (Years)	6.2	7.4	30.8
Replacements Required Relative to Induction	5.0	4.2	n/a
Install Cost			
Average Fixture Cost ($)	$ -	$ 600	$ 1,200
Energy Cost			
Annual kWh	1,489	761	855
Electricity Rate ($/kWh)	$ 0.140	$ 0.140	$ 0.140
Annual Electricity Cost ($)	$ 208	$ 106	$ 119
Maintenance Cost			
Price per Lamp	$ 80	$ 12	-
Number of Lamps	1	4	-
Lamp Replacement Cost	$ 80	$ 48	-
Labor Price ($/Hour)	$ 65	$ 65	-
Labor Hours	0.5	0.5	-
Labor Cost ($)	$ 33	$ 33	-
Disposal Cost per Lamp ($)	$ 2	$ 0.50	-
Total Disposal Cost	$ 2	$ 2	-
Total Maintenance Cost	$ 115	$ 83	$ -
Maintenance Cost Over Life of Induction	$ 573	$ 344	$ -
Induction System Life (Years)	30.8	30.8	30.8
TOTAL Cost Over Life of Induction	**$ 6,965**	**$ 4,210**	**$ 4,871**

Lighting Project L-5 Retrofit all existing Metal Halide/High Pressure Sodium fixtures with energy efficient LED lamps.

Project Description

Existing parking lot and building exterior lighting at EMWD is illuminated mainly by High Pressure Sodium (HPS) and few Metal Halide fixtures using a variety of lamp wattages. One energy efficient option to consider for such fixtures is use of energy efficient Light Emitting Diode (LED) lamps. The table below summarizes various exterior fixture types found in the facility alongside the proposed LED fixture option. Also shown are the estimated savings per fixture. Refer to Appendix-F of this report for a detailed lighting audit of existing and proposed fixtures.

Table 5.10 – Comparison of Standard MH 400W vs. LED 147W

	Metal Halide (Standard 400W)	High Pressure Sodium (Standard 250W)	1-lamp fixture with 147-watt cluster LED lamps
LAMP DATA			
Initial Lamp Output (Lumens)	36,000	29,000	7,384
Design Lamp Output (Lumens) [2]	23,500	21,460	7,384
Lamp Lumen Maintenance (%)	65%	74%	100%
Lamp Life (Hours)	20,000	24,000	50,000
Work Surface Illuminance			
Work Surface Illuminance Efficiency	1	1	1.75
SYSTEM DATA			
Lamps per Fixture	1	1	1
Ballast Factor	1.0	1.0	1.0
Fixture Efficiency [3]	70%	70%	95%
Initial System Lumens	25,200	20,300	7,015
Mean System Lumens	16,450	15,022	7,015
Effective System Lumens	16,450	15,022	12,276
Lumen Reduction w.r.t Metal Halide			25%
Lumen Reduction w.r.t High Pressure Sodium			18%
Fixture Input Power (Watts)	458	295	147
Design Lamp Efficacy (Lumens/Watt)	51	73	50
CRI	65	22	88

[1] Data gathered from lamp and ballast manufacturers including Sylvania and General Electric

[2] At 40% Rated Life

[3] Based on empirical data

[4] Fixture efficiency is an estimate based on typical values. Efficiency varies by fixture design, condition, etc.

The "Work Surface Illuminance Efficiency" Index can be explained based on the following:

Directionality

A lumen number specified for a lamp is a measurement of all light produced by that lamp, emitted in a spherical manner and in all directions. Such measurement is usually performed in a highly efficient and calibrated optical integrating sphere. Today LEDs and Fluorescent lamps have about the same lumens per watt efficiency (85-100 L/W). In the case of a fluorescent lamp the light emits in all directions whereas a LED lamp emits in one general direction with an angular spread that varies between 90º -140º. Whereas, to boost efficiency, the fluorescent lamp is usually placed in a fixture that collects half of the light emitted in the opposite direction and redirects it in the desired direction.

Fixture Efficiency

The fixture is usually made of painted (white) sheet metal bent to a shape to collect light. The fixture reflectivity can vary between 50%-80% depending on the type of paint or finish.
In addition to light lost due to reflectivity, some of the light that hits the back side of the lamp is blocked by the lamp itself, as the lamp body will not allow transmission of the visible light.
For fluorescent systems, total lumen output of the lamp must be multiplied by true fixture efficiency. However, LEDs naturally emit light in one general direction, eliminating the need for a reflector, resulting in 100% fixture efficiency.

High Color Rendition Index (CRI)

CRI of a light source is a measure of how well the light from that source brings out various colors compared to a perfect black body source, such as the sun or an incandescent lamp, which have CRI=100. Most metal halide lamps have CRI near 65-70 range. LED lamps claims CRI=90.

Implementation Scope of Work

1.) Prior to initiating service, follow all safety precautions associated with working on metal halide fixtures.

2.) Remove old lamps and ballasts (All fixtures)

3.) Replace with the new LED lamp and provide line voltage directly bypassing starter/ballast/transformer.

Analysis Summary

Table 5.11 – Analysis summary of proposed Lighting Project L-5

# of Fixtures	kW Saved	kWh Saved	Rate ($/kWh)	Project Cost ($)	Cost Savings ($)	Payback Period without Incentive (years)	Approx. Incentive ($)	Project Costs w/ Incentive ($)	Payback Period with Incentive (years)
98	23.3	85,206	$0.140	$150,693	$11,929	12.6	$6,590	$144,102	12.1

Mechanical Project M-1: Install new DDC based Energy Management System (EMS)

Project Description

The audited facility currently depends on an out-dated Energy Management System (EMS) with DDC controls. The existing EMS system is presently used for the scheduling and setting temperature points and set back temperatures. The EMWD personnel are experiencing problems with the EMS controls and are interested in either installing a new EMS or upgrading the functions of the existing EMS so more control and diagnostic functions can be accomplished. The system is too old to order parts from a vendor and the maintenance staff has been salvaging parts as the controls go bad; therefore, they fall short of being able to appropriately manage the entire building.

Also, present generation EMS system will bring in capability for more sophisticated control strategies; for example, (a) making sure static pressure for VAV systems is reset based on true demand, (b) reset of chilled water supply temperature based on demand, (c) reset of cold deck and hot deck temperature, (d) verification of proper zone temperature control and set points, (e) proper scheduling of systems, (f) optimal start and stop of systems.

Since HVAC energy use in any given building is significant, it takes the best tools available in the industry to make a positive impact on their use efficiency. The best available technology that can be considered by the District in the current era is an Energy Management System (EMS) with Direct Digital Control of temperatures in each conditioned space. DDC systems allows a maintenance technician to remotely monitor room temperature conditions, maintain and change set points, schedule equipment On/Off periods, track energy use, and detect potential problems before the space users generate a complaint. Considering that public facilities will remain forever, it makes perfect sense to update building controls for improved monitoring, maintenance, and energy efficiency.

In general, although full DDC systems are more expensive than pneumatic systems, hybrids, or stand-alone controls, they offer many more benefits:

1.) **Better Building Feedback.** DDC systems typically provide much more information feedback from the building than either pneumatic or stand-alone systems. For example, a DDC system could reset variable air volume (VAV) static pressure by scanning all the VAV damper positions and gradually changing the static pressure until only one damper was completely open. At that static pressure the fan draws the least amount of power required to distribute sufficient air to all the boxes. Pneumatic and stand-alone controllers usually cannot reset static pressure in this manner, because they typically have no way of sensing VAV damper position. Also better control over VAV dampers could lead to higher savings by shutting of the VAV box during unoccupied periods. Currently, the poor control leads to wasteful cooling of zones during unoccupied periods

2.) **Improved Reliability.** Ongoing maintenance of pneumatic systems—particularly calibration of pneumatic sensors and actuators—is a more frequent and time-consuming task than maintenance of DDC systems.

3.) **More Precise Control.** The electronic components of DDC make it possible to use more accurate sensors than pneumatic systems use, so DDC systems save more energy and provide better occupant comfort.

The following are highlights of many other control benefits from implementation of EMS:

- It can be programmed to maintain desired temperatures in each zone, without the concern associated with users tampering of set points.
- On/Off times and start times of unitary equipment can be optimized based on outside weather conditions as well as observed response time of each building.
- When used in conjunction with occupancy sensors, they can assist in "smart control" of temperature set points, saving considerable energy over existing mode of operation.
- When used in conjunction with door sensors, they can assist in "smart control" of equipment run times, saving considerable energy over existing mode of operation.
- On/Off times and temperature set points can be dynamically changed based on expected variations in occupancy schedules and occupancy conditions.
- Equipment efficiencies and run times can be better monitored to trigger filter changes and equipment maintenance.
- Through data trending and graphical illustrations of historical system operating points, inefficiencies of systems can be easily pinpointed and trouble shooting of equipment is made easier.

We estimate that by deploying such a control system, it will assist the EMWD in reducing HVAC run times and natural gas burner usage by at least 5% during occupancy conditions and by nearly 15% during non-occupancy conditions such as early morning start-up and off hour usage. This is equivalent to reducing overall energy use by nearly 8% over the period of a year.

Implementation Scope of Work

1. Provide unitary equipment controllers at each unit serving the controlled zones. Situate them carefully so as to avoid exposure to outside ambient conditions. Possible locations include NEMA rated dust proof enclosures or secure mounting inside occupied zones or ceiling spaces. Each equipment module will have stand-alone control capability. However, it will be daisy chained to a central controller. The central controller will have communication capability to accept new programs, schedules, set points, etc. from the remote computer station at the maintenance office and from the scheduling workstation at the District office.

2. Provide new thermistors and update the existing ones (where applicable) in each controlled zone with push-button override capability through software programming.

3. To minimize installation cost, use existing conduits where available for drawing communication wiring. Use new conduits where required.

4. This component of the project will require a careful design process to describe the required logic and sequence of operations that needs to be programmed into the unit. The logic must address several key areas germane to the operation of the units under the variety of conditions encountered at the county.

5. Commission the Energy Management System (EMS); the process includes pre-startup inspections of the EMS monitoring interface with installed equipment, subsystems and systems and the execution of verification and functional performance testing of the EMS system controls. The EMS components important to the commissioning effort include central processing/monitoring hardware and software, communications/alarm function, user interface

with EMS, monitoring functions required for facility operation, local control panels and individual monitoring points.

6. Provide 1-month operator training for the operators. Training shall include all operational, programming, control, and maintenance aspects of the system.

   Note: Effective use of an EMS system critically hinges upon proper training and programming. Therefore, the District must plan for procuring adequate training during system installation. Success of the system is also critically dependent on the District's ability to assign a dedicated staff resource to remain knowledgeable and maintain such controls.

Analysis Summary

Table 5.12 – Analysis summary of proposed Mechanical Project M-1

kW Saved	kWh Saved	Rate ($/kWh)	Therms Saved	Rate ($/Therm)	Project Cost without Incentive ($)	Energy Cost Savings ($)	Payback Period without Incentive (years)	Estimated Incentive ($)	Project Cost with Incentive ($)	Simple Payback Period with Incentive (Years)
n/a	229,723	$0.086	3,409	$0.689	$219,495	$22,181	9.9	$24,084	$195,411	8.8

Mechanical Project M-2: Implement HVAC optimization control strategy

Project Description

Chilled Water Temperature Reset Strategy (Based on the actual load conditions)

Absorption chiller and electric screw chillers typically operate at a chilled water supply temperature set point of 42 degrees F. When the overall plant load is light, or less than full load, it is not necessary for the air handler coils to receive chilled water at such a low temperature. The cold deck set point under partial load conditions can be maintained even if chilled water is supplied to the coils at, say 47 degrees F. Operating the chillers at a higher chilled water supply set point actually helps improved chiller efficiency. It is common to see a 1.5% net improvement in chiller energy efficiency for every 1 degree increase in the chilled water supply temperature set point.

Here is how such control logic would work:

1. Scan all the chilled water valves on a periodic basis (e.g., every 5 minutes). If all the chilled water valves are in a partially closed position that means that the coil demand is satisfied at partial flow. Cold deck temperature set point is also satisfied. If that is the case, raise the chilled water set point by a “Delta” (e.g., 1 degree F or Operator Defined value).

2. Scan the system during the next time interval (e.g., 5 minutes). If any single chilled water valve is 100% open and the cold deck temperature set point has not been reached (e.g., cold deck set at 55 deg. F and the actual temperature is 57 deg F.), it means that the air handler is struggling to achieve the desired set point. That would trigger a decrease in the chilled water set point by the same “Delta”. However, if the scanning indicates that all the coil valves are still partially closed, the controls could reset the chilled water supply temperature by another “Delta” (1 degree F).

3. In a majority of building served by central plant, chilled water reset strategy works during a majority of time. The only time where it may not work is when (i) summer hot day and air handler is starved for cooling. However, such durations are perhaps less than 20% of the time in a year. Typically, reset strategy can work well in the following periods:

Winter: Literally 24 hours a day
Summer Weekday: late evening; early morning

4. If indoor humidity is a concern (i.e., raising set point causing higher humidity in the supply air,) it is possible to limit the reset temperature to a limit of say, 50 degrees F or as Operator Defined. In addition, the control system can track the return air humidity and if it is not within the desired limit (e.g., 60%), the chilled water reset function can be moderated.

5. Based on central plant modeling experience, we believe that on a yearly basis, it is possible to achieve a chiller energy savings of approximately 6% using this strategy. This assumes that on an average over 80% of the year, chilled water temperature is reset by five degrees F. (i.e., up to an average of 47 degrees F).

6. The only requirement for this strategy is that the building management system has the ability to communicate with the chillers and can command the chiller to operate at a given set point temperature. Chillers will need to have the communication interface chip to “talk” to the building EMS so that the set point can be commanded. Beyond that, the sequence will need to be programmed into the software.

Hot Water Temperature Reset Strategy (Based on the outside air temperature)

Presently, the space heating boilers run at stand-by mode providing hot water at 180 °F. For enhanced savings it will be beneficial to run boilers in the on-demand mode. Energy saving option will be to reset hot water boiler temperature based on the outside temperature. The logic will be to reset the hot water boiler temperature to 140 °F; therefore setting hot deck set-point to 80 °F when outside temperature is more than 65 °F. For outside temperature less than 65 °F, the logic will start increasing the hot water till it reaches 180 °F; therefore setting hot deck temperature to 95 °F.

Cold/Hot Deck Reset Strategy (Based on the outside air temperature – OSA)

The hot and cold air streams are combined in mixing boxes to satisfy the individual space temperature requirements. In the absence of optimization controls, these systems mix the two air streams to produce the desired temperature. When the space temperature is acceptable, a greater difference between the temperatures of the hot and cold decks results in inefficient system operation. This program selects the areas with the greatest heating and cooling requirements, and establishes the minimum hot and cold deck temperature differentials which will meet the requirements, thus maximizing system efficiency. Zone space temperature sensors are used to determine the greatest cooling and heating space temperature requirements during the building occupied period and reset the corresponding deck temperature proportionately.

Traditionally cold deck is not reset and maintained at 55 degree F. During periods such as those in early morning hours, cooler days, and late evenings, a number of perimeter zones call for heating. If too many zones call for heat, it would be wasteful to set the cold deck at 55 degree F; Rather, it should be reset as high as possible so long as it does not compromise cooling and dehumidifying ability at the cooling coil. The humidity sensor may be added either in the return air or in the perceived most humid zone to see if the reset causes an adverse dehumidification effects. If it does, the reset can be bypassed. Based on experience, the cold/hot deck reset could lead to achieve additional 5% and 3% chiller energy and boiler energy savings respectively.

The humidity sensor may be added either in the return air or in the perceived most humid zone to see if the reset causes an adverse dehumidification effects. If it does, the reset can be bypassed. Based on experience, the cold/hot deck reset could lead to achieve additional 5% and 3% chiller energy and boiler energy savings respectively.

Analysis Summary

Table 5.13 – Analysis summary of proposed Mechanical Project M-2

kW Saved	kWh Saved	Electricity Rate ($/kWh)	Heating Therms Saved	Heating-Natural Gas Rate ($/Therm)	Project Cost without incentives ($)	Annual Cost Savings ($)	Payback Period without Incentives (years)	Approximate Incentives ($)	Project Cost with incentives ($)	Payback Period with Incentives (years)
n/a	28,022	$0.095	774	$0.689	$89,400	$3,184	28.1	$3,296	$86,104	27.0

Mechanical Project M-3: Replace existing screw compressors serving the air-cooled chiller with a new Turbocor 130-ton magnetic-bearing compressor

Project Description

Administration and O&M buildings are served by a set of three chillers (Arranged in load sequence):

1. York single stage absorption chiller (up to 235 tons capacity)
2. Carrier air cooled electric screw-chiller (130 tons)
3. Trane air cooled electric screw-chiller (240 tons)

Absorption chiller is used as the primary equipment for cooling, however, in cases where the cooling load is higher than the capacity of the primary equipment; the electric chillers follow the excess load to achieve the required cooling. Based on the current load conditions, third chiller rarely comes on and is very lightly loaded; therefore, it's recommended to replace Chiller #2.

This measure proposes the replacement of four existing compressors (130-tons total) serving the air-cooled chiller with two new 70-ton *Turbocor* magnetic-bearing compressor[1]. Based on the compressor type and condition, it is estimated that the operating efficiency of the existing unit is in the order of 1.256 kW/ton (full-load)[2]. With installation of the *Turbocor* compressor, the chiller is expected to operate at an efficiency of 0.70 kW/ton at full-load and can provide superior part load performance of 0.45 kW/ton. For analysis purpose, a conservative efficiency of 0.65 kW/ton is used[3].

The proposed *Turbocor* compressor is specifically designed for the Heating, Ventilation, and Air Conditioning Industry. Based on various case studies, this type of compressor has been successfully installed in many retrofit applications nation-wide. Features of the compressor include magnetic bearings, oil-free long-life operation, two-stage centrifugal compression with integral variable-speed drive, environmentally friendly HFC-134a refrigerant, low noise, and a light-weight design.

Refer to Appendix-E for additional information on the proposed compressor including product brochures and specifications.

130-Ton "Carrier Make" screw air cooled chiller

[1] Turbocor compressors are presently only available in 60-, 70-, 80- and 90-ton capacities.
[2] Based on typical air-cooled chiller efficiencies
[3] Value is based on manufacturer's literature and various Turbcor case studies on air-cooled chiller applications. Given that this is a retrofit application, actual performance will vary.

Implementation Scope of Work

1. Prior to installation of the new compressor, we recommend that the chiller manufacturer (**Carrier**) be contacted to determine if there are any restrictions or limitations with the proposed measure on the existing chiller model number.

2. Remove existing compressor(s) and install new compressor(s) in its place. Depending on the existing chiller parameters, the installation might involve custom bracketing for support of the new compressors.

3. Install new compressor as per manufacturer's written instructions. *Turbocor* compressors are designed for "plug and play" operation; however, some system modifications may be required.

4. Install new electronic expansion valve to match the system.

5. The existing chiller is charged with R-22 refrigerant (i.e., HCFC refrigerant). When retiring equipment that contains CFC's or HCFC's, the Clean Air Act requires that refrigerant be recovered by a certified technician.

6. *Turbocor* compressors utilize R134a refrigerant. Work scope shall include system charge with R134a refrigerant.

7. Existing electrical switchgear can be reused. The new compressor does not represent an increased equipment load.

Analysis Summary

Table 5.14 – Analysis summary of proposed Mechanical Project M-3[1]

kW Saved	kWh Saved	Electricity Rate ($/kWh)	Therms Saved	Natural Gas Rate ($/Therm)	Project Cost without incentive ($)	Annual Cost Savings ($)	Payback Period without Incentive (years)	Approximate Incentives ($)	Project Cost with incentive ($)	Payback Period with Incentives (years)
65	172,247	$0.095	n/a	n/a	$75,007	$16,290	4.6	$32,337	$42,670	2.6

[1] Project savings are calculated post implementation of project M-1 & M-2

Mechanical Project M-4: Provide garage door sensor controls at the Operations, Maintenance, and Controls (OMC) shops to shut-off gas-fired radiant heaters when garage doors are open

Project Description

The workshops (Auto-Shop & Mechanical-Shop) at the operation and maintenance facility of EMWD are presently heated by two gas-fired radiant heaters.

During walkthrough observations, we noticed that the large garage doors are regularly left open during normal operational hours. Although the site visit was during spring, staff indicates that this trend may also occur during winter where heaters are heavily used. Typical trend is to turn on the heaters in the morning (approximately 5-6 AM) and off at shop shutdown (approximately 5 - 6 PM). During this time, it is likely that there are many periods where garage doors are open and heating is left on. With the doors open, systems are forced to run continuously because zones never reach the target set point temperature. Open doors invariably result in excess infiltration and high run times on HVAC equipment.

Typical shop area with garage doors open

A solution to alleviate excess energy use in the garage is to implement a door switch that would shut off the heater(s) when the door is left open for a specified duration of time (e.g. 10 minutes). Given that there are 4 garage doors in the garage, the room can be sectioned into 2 zones (each zone with two garage doors). Logic shall be that if any one door in that zone is open, all heaters serving that zone will shutdown.

Implementation Scope of Work

1. Provide a dedicated interlock door switch/sensor with time delay relay. The time delay function shall have an adjustable range between 5 to 15 minutes. Installation shall be conducted per manufacturer's written recommendations.

2. Wire the door switch/sensor to the heater's manual thermostat. Provide conduit for all exposed wiring. Where available, route new control wiring through existing conduits. For non-exposed wiring, plenum-rated conductors may be used.

3. Sequence of operation shall disable the heater after having the door open for a pre-set time (e.g., 10 minutes). When the garage door is closed, HVAC shall resume normal operation.

4. All roof penetrations shall be fire proof with California Mechanical Code approved material.

5. Installation shall be in compliance with the latest NEC and all applicable regulations.

Analysis Summary

Table 5.15 – Analysis summary of proposed Mechanical Project M-4[1]

kW Saved	kWh Saved	Electricity Rate ($/kWh)	Heating Therms Saved	Heating-Natural Gas Rate ($/Therm)	Project Cost without incentives ($)	Annual Cost Savings ($)	Payback Period without Incentives (years)	Approximate Incentives ($)	Project Cost with incentives ($)	Payback Period with Incentives (years)
n/a	n/a	n/a	2,752	$0.689	$1,198	$1,897	0.6	$1,198	$0	Immediate

[1] Project savings are calculated post implementation of project M-1 & M-2

Mechanical Project M-5: Replace existing old boiler serving EMWD with new high-efficiency, low-NOx boiler

Project Description

Space heating requirements in the Administration Building of EMWD are served by an old boiler with a rated heating input capacity of 1,670 MBH. Based on staff comments, the existing boiler is original building equipment with more than 15 years of age. Based on the walkthrough observation, the boiler appears to be in bad shape.

Existing old boiler – Teledyne Laars – HH1670

This project proposes the replacement of the existing old boiler with an equal capacity new boiler of higher efficiency. Efficiency of the new boiler shall be at least 85% (higher heating value basis) with NOx emissions less than 20 ppm. See Appendix-E for manufacturer's data of boilers with these specifications.

Because equipment is near its expected service life, the payback period associated with this recommendation may be an irrelevant issue. We propose that this measure be seriously considered along with any facility modernization plans proposed in the near future.

Implementation Scope of Work

1. Seek services of an engineer to specify the new boiler with a thermal efficiency rating of at least 85% with NOx levels not to exceed 20 ppm.

2. Remove existing old boiler. Ensure that demolition of all elements is in accordance with local regulations.

3. Assess whether load conditions in the served areas have changed significantly since the existing boiler was originally installed.

4. Verify all required minimum clearances from combustible construction materials. Clearances should allow for servicing.

5. Verify which of the existing boiler components can be reused (if any). Existing gas piping for example can typically be reused. Refer to manufacturer's installation instructions for proper ventilation and flue exhaust requirements.

6. Install new boiler as per boiler manufacturer's written instructions. The boiler should be mounted on a level, structurally sound surface. Mount the new boiler in the same location after removing the old boiler. Ensure that new boiler is anchored as per boiler manufacturer's written recommendations and California Building Code requirements.

7. Proceed with equipment start-up as instructed by boiler manufacturer.

8. Installation of all new equipment shall comply with all federal regulations including but not limited to the California Mechanical Code, National Electric Code, California Fire Code, and gas service related regulations.

Analysis Summary

Table 5.16 – Analysis summary of proposed Mechanical Project M-5[1]

kW Saved	kWh Saved	Electricity Rate ($/kWh)	Therms Saved	Natural Gas Rate ($/Therm)	Project Cost without incentive ($)	Annual Cost Savings ($)	Payback Period without Incentive (years)	Approximate Incentives ($)	Project Cost with incentive ($)	Payback Period with Incentives (years)
n/a	n/a	n/a	5,859	$0.689	$45,809	$4,039	11.3	$5,859	$39,949	9.9

[1] Project savings are calculated post implementation of project M-1 & M-2

Mechanical Project M-6: Retrofit Standard-efficiency hot water circulation central plant pumps with premium efficiency motors; install Variable Frequency Drives (VFDs) on the two hot water circulation pumps

Project Description

Hot water circulation at the EMWD is done by (4) 3-hp pumps. The aforementioned pumps are standard efficiency and operated at the constant speed. This project proposes the premium efficiency motors retrofit and installation of Variable Frequency Drives (VFDs) to the four hot water circulation pumps.

As is the case with most HVAC systems, it's likely that the existing pumps were originally specified based on the worst-case maximum flow conditions or simply with the usual 15 to 20% over-sizing criteria; 2 of the 4 pumps are mostly lighted loaded. Accordingly, this presents an opportunity for energy savings from the two aforementioned pumps through use of a VFD for pump motor control. The system is presently maintained at constant pressure though use of 3-way valves at all terminal units. For variable-flow operation, we propose that the by-pass leg at each valve be manually closed and a differential pressure sensor be installed (at the end of the distribution system) to control the VFDs on the pumps. The valve position will be the function of temperature differential between set-point and outside ambient temperature.

Space heating hot water circulation pump

Implementation Scope of Work:

1. Provide power and electrical disconnect requirements for new variable frequency drives

2. Install premium efficiency motors.

3. Install new variable frequency drives (including appropriate NEMA enclosure) for speed control on the boiler. Normally, it is recommended to specify an enclosure with designation 3R for outdoor installations and 12 or 1 for indoor installations.

4. Verify the existing 3-way valve used at the terminal units and manually close the by-pass leg. Depending on the existing valve, it may be necessary to replace 3-way valves with 2-way valve.

5. A differential pressure sensor (transducer) located at in the piping distribution system shall provide a signal to the VFD. More than one sensor may be necessary. The sensor will directly control the VFD on the pump.

6. Consult with the boiler manufacturer and determine minimum flow requirements. To prevent damage to equipment, it's critical that minimum flow be maintained at all times.

7. Provide added programming, testing, and balancing.

8. Appendix-E includes product information on variable frequency drives manufactured by ABB.

Analysis Summary

Table 5.17 – Analysis summary of proposed Mechanical Project M-6[1]

kW Saved	kWh Saved	Electricity Rate ($/kWh)	Therms Saved	Natural Gas Rate ($/Therm)	Project Cost without incentive ($)	Annual Cost Savings ($)	Payback Period without Incentive (years)	Approximate Incentives ($)	Project Cost with incentive ($)	Payback Period with Incentives (years)
n/a	10,613	$0.084	n/a	n/a	$15,602	$893	17.5	$955	$14,647	16.4

[1] Project savings are calculated post implementation of project M-1 & M-2

Mechanical Project M-7: Analyze existing Cogeneration System

(a) Provide demand based logic which will dictate operational mode with lowest variable operation cost.
(b) Addition of micro-turbines to maximize electricity generation and absorption chiller output.

Project Description

The eight 60-kW capstone micro-turbines operating on natural gas provides heat input to the absorption chiller for cooling purposes as well as generates electricity for the building's electric demands. This electricity produced is used by the buildings for lighting, HVAC loads, data center loads, and various other plug loads.

The cogeneration system is designed to operate as an electric load following system. The waste heat recovered from turbine flue gas is used to run a 230 tons "YORK" absorption chiller; however, due to the limited heat generation the maximum absorption chiller output is 137 tons. Also, because the cogeneration system is following the facility electric load, the absorption chiller output also fluctuates. The EMWD is interested in an analysis to maximize the energy savings from its cogeneration and absorption chiller operations. The EMWD purchases natural gas for the cogeneration system at a non-core rate which is less expensive than the core rate. One of the options is to add additional turbines or add direct firing capability to increase the absorption output. Presently, the cogeneration system follows the building load regardless of the utility rate schedule at any given hour. Three scenarios are discussed in this report:

1. Demand based logic which will dictate operational mode with lowest variable operation cost.
2. Addition of micro-turbines to maximize electricity generation and absorption chiller output.

Cogeneration is the combined production of cooling and power from the same source of energy. The system is interconnected to the electric utility grid, both to receive electricity and to deliver surplus electricity. For any given demand required by the users, a great number of operating conditions are possible. The operational mode with the lowest variable cost is obtained through a linear programming model. Starting from the same source of energy – natural gas – cogeneration provides heating and power that can meet energy needs of the Administration and Operations & Maintenance Building. Combined with heat-driven absorption chillers, the heat is extended into the summer months to match cooling loads.

The purpose of the cogeneration system is to attend the demand of different energy services (electricity, $\mathbf{E_d}$; and cooling, $\mathbf{R_d}$) of the facility. The cogeneration system consists of the following productive units: eight 60 kW cogeneration modules **CM** (providing heat, $\mathbf{Q_c}$, and work, $\mathbf{W_c}$), an absorption chiller AC (providing cooling, $\mathbf{R_q}$, and driven by heat, $\mathbf{Q_r}$), and two screw chillers EC (providing cooling, $\mathbf{R_e}$, and driven by electricity, $\mathbf{E_r}$). Demands is always met either by the cogeneration system productive units or with the help of purchased electricity from the electric grid ($\mathbf{E_p}$). There is no possibility to sell surplus electricity (Es) back to the grid. Similarly, waste heat is discarded and is not sold.

Optimal operation for the simple tri-generation system is obtained by solving a linear programming model. The model was solved using the Premium Solver Platform, a commercial software package for solving optimization problems. The objective function to be minimized in the linear model is the operation variable cost [$/h]:

$$CH = p_{fc} \cdot F_c + p_{fa} \cdot F_a + p_{ep} \cdot E_p - p_{es} \cdot E_s$$

Where:

Fc = Cogen Gas (Therms/Hr.)
Ep = Electricity purchased from Utility (kW)
Es = Surplus Electricity (kW)
Pfc = Cost of Cogen Gas ($/Therm)
Pep = Cost of Utility Electricity ($/kW)
Pes= Cost of Surplus Electricity ($/kW); note: In present case, Pes = 0

Following parameters were considered for the analysis:

Capacity Limit:
Wc ≤ 480 kW
Rq ≤ 137.42 Tons
Re ≤ 370 Tons

Functional Aspects:

Unit	Efficiency Coefficeint	Nominal Capacity
Cogen Module, CM	CMw = 7.46 CMq = 0.41	Wc nom = 480 kW
Absorption Chiller, AC	Acr = 5.26	Rq nom = 137.42 Tons
Electric Chiller, EC	Re nom = 1.2667 kW/Ton	Re nom = 370 Tons

Production Restrictions:

CMw x Fcw - Wc = 0
CMq x Fcr - Qcr = 0
ACr x Qr - Rq = 0
ECr x Er - Re = 0

Balance Equations:

Wc + Ep = Ed + Er
Rq + Re = Rd

Given the energy demands to be satisfied, the Premium Solver Platform determines the feasible operation state with minimum variable cost.

Charts below determine the true or total cost of electricity. Chart assumes an engine heat rate of 0.0545 Therms/kWh and a maintenance allocation of $0.018/kWh for engines.

Chart shows the true off-peak, mid-peak, and on-peak Summer and Winter electric price from the utility as well as the cost of electricity from the on-site micro turbines if the recoverable heat is used for space cooling. Following observations can be made from the charts.

(1) **For Summer Months:** If the heat is recovered for cooling, the cogenerations remains profitable during all off-peak, mid-peak hours, and on-peak hours. Also, on-site generation remains profitable even if heat is not recovered for cooling during all mid-peak and on-peak hours.

(2) For Winter Months: If heat is recovered for cooling, the cogeneration remains profitable during all mid-peak hours only. Also, on-site generation becomes unprofitable if heat is not recovered for cooling during mid peak hours.

If implemented, optimized demand based logic which will reduce the overall energy cost substantially. Also, analysis was done for two additional micro-turbines to maximize electricity generation (from existing 480 kW to 600 kW) and absorption chiller output (from existing 137.42 Tons to 172.18 Tons). Cogeneration systems produce the best financial results when sized to between 40-60% of the peak electric load of a facility. Assuming fixed natural gas price, the two micro-turbine addition will have the payback of approximately 21 years. Also, the natural gas prices are known to be unpredictable and conservative 3-5% per year escalation factor renders this micro-turbine addition economically infeasible.

Figure 5.2 – EMWD – Cost of Electricity Graph – Off-Peak Winter Use

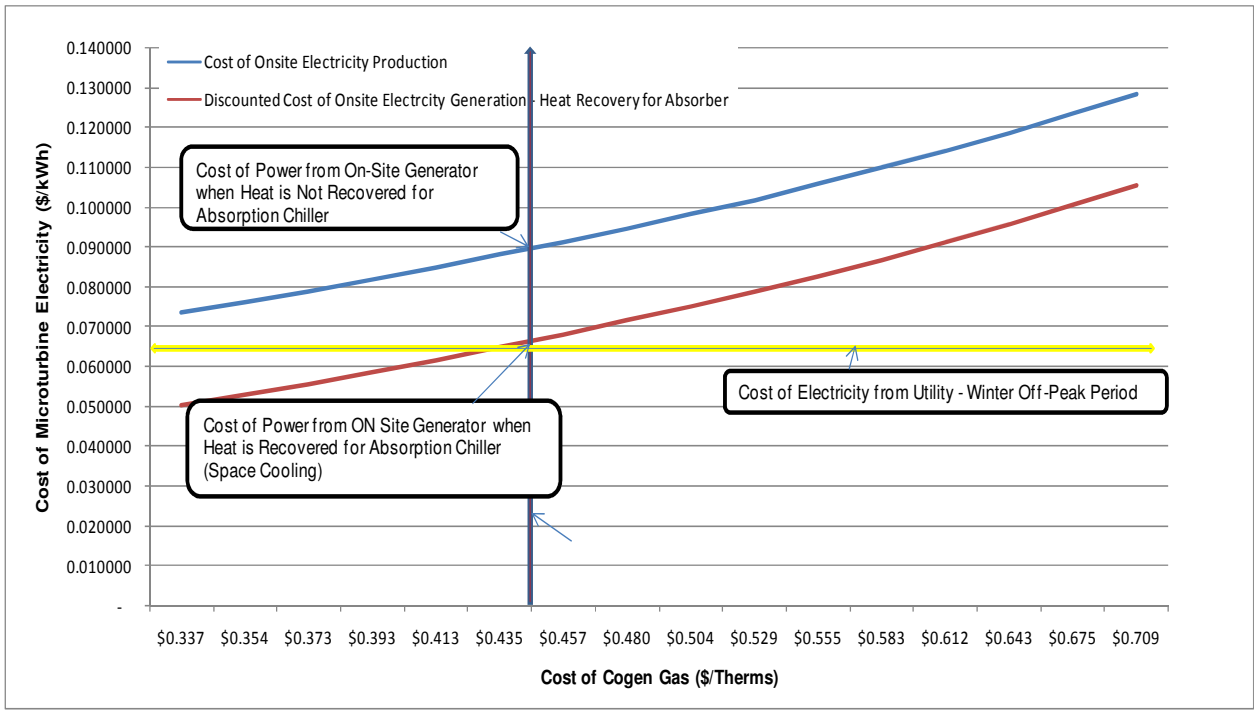

Figure 5.3 – EMWD – Cost of Electricity Graph – Mid-Peak Winter Use

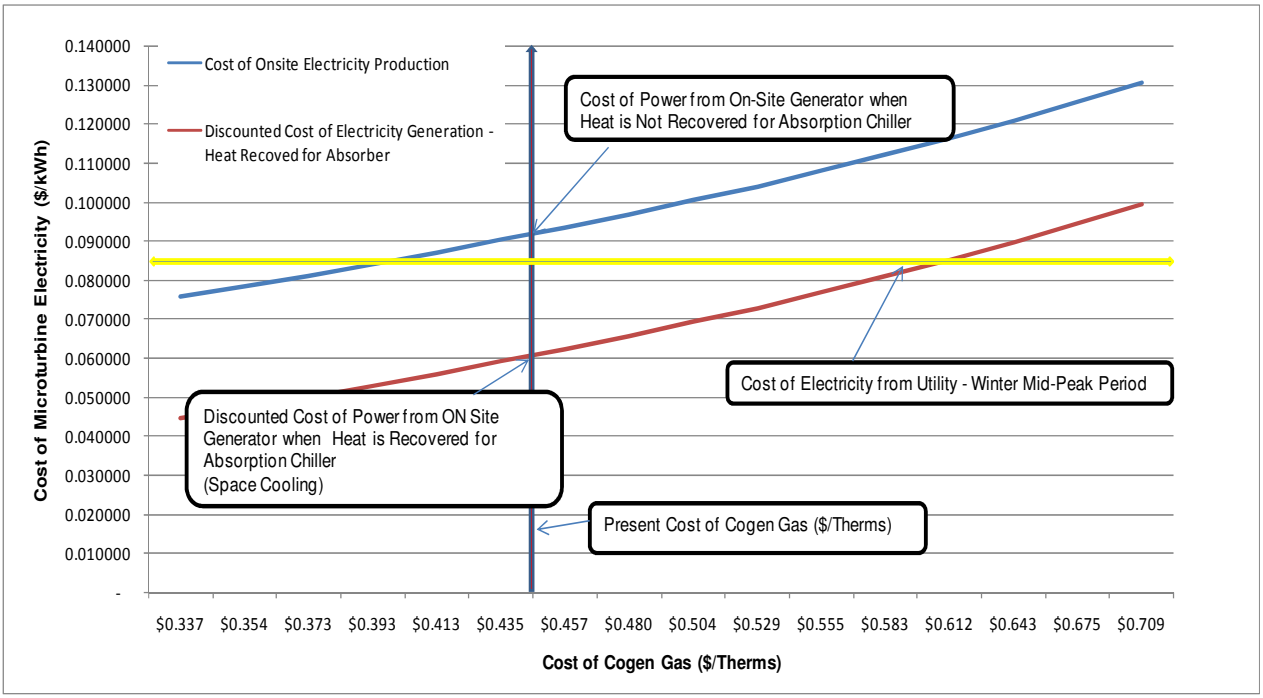

Figure 5.4 – EMWD – Cost of Electricity Graph – Off-Peak Summer Use

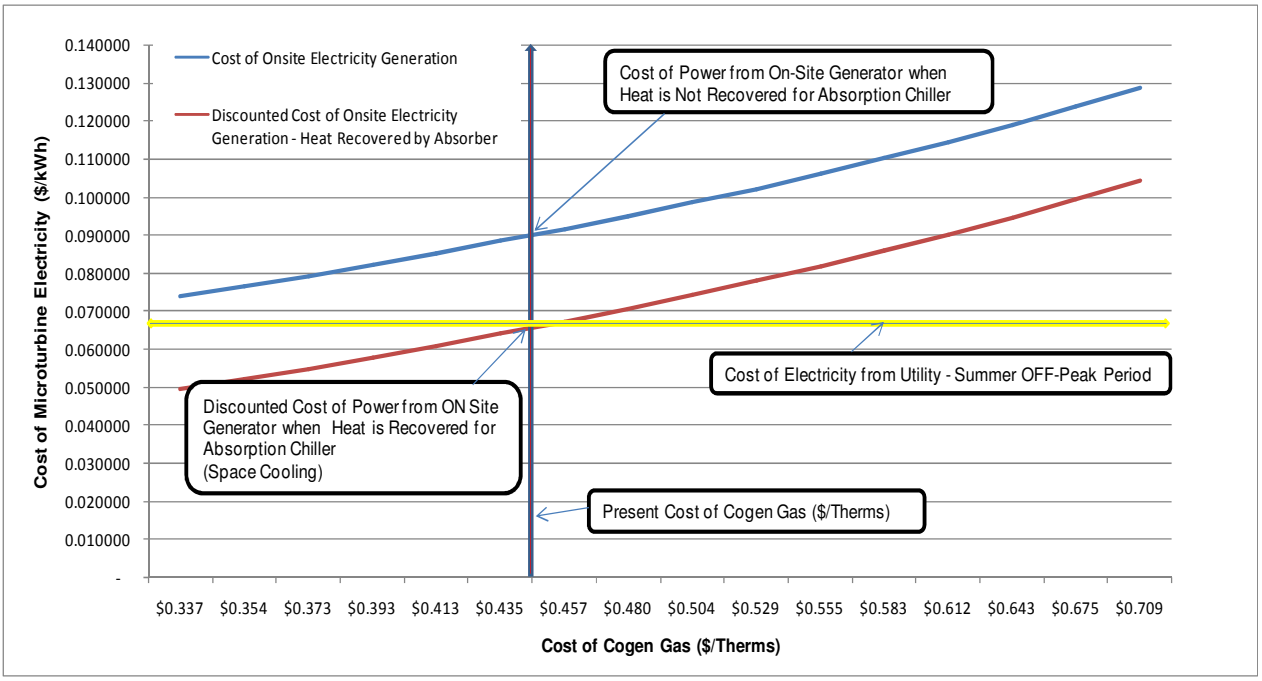

Figure 5.5 – EMWD – Cost of Electricity Graph – Mid-Peak Summer Use

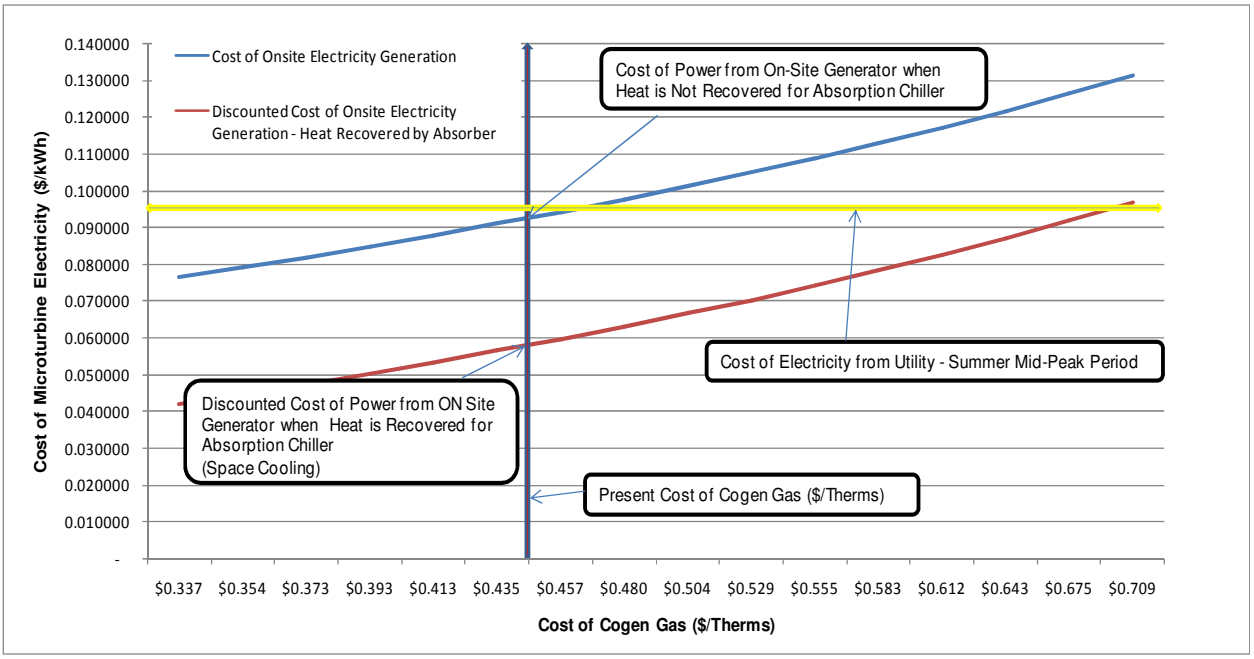

Figure 5.6 – EMWD – Cost of Electricity Graph – On-Peak Summer Use

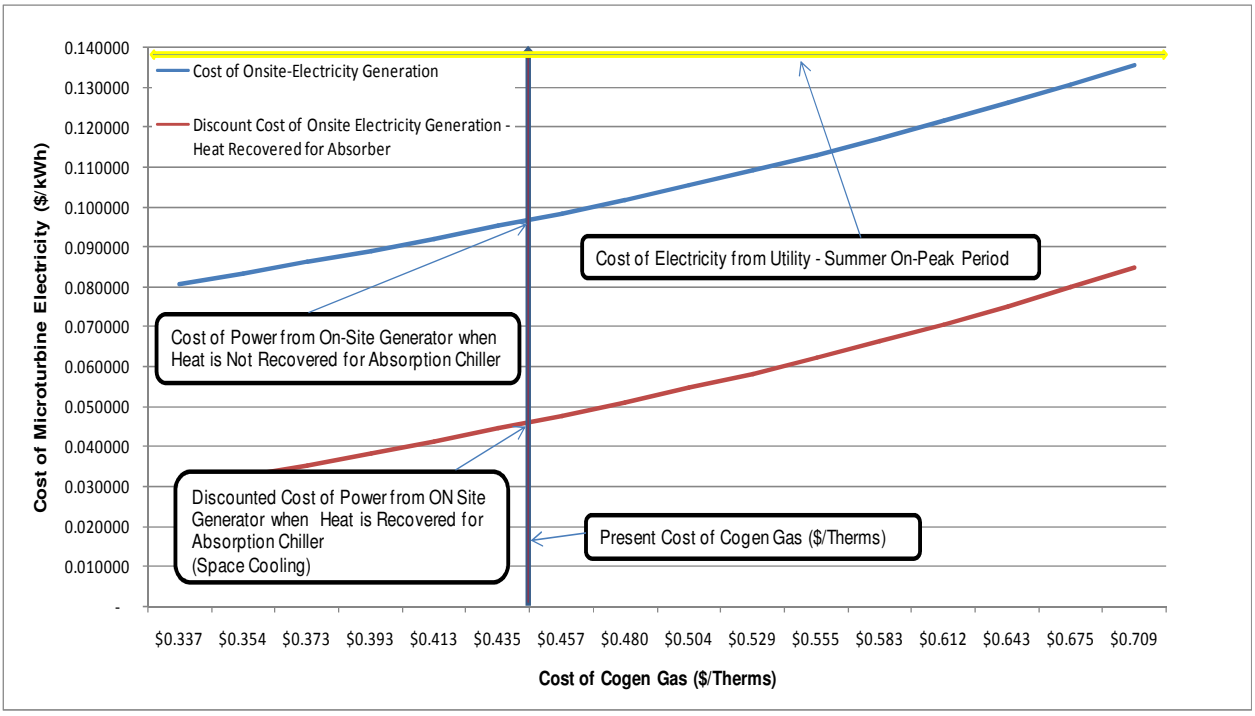

Analysis Summary

Table 5.18 – Analysis summary of Project M-7A

kW Saved	kWh Saved	Therms Saved	Project Cost ($)	Energy Cost Savings ($)	Payback Period (years)
n/a	-1,165,008	68,047	$32,000	$139,576	0.2

Table 5.19 – Analysis summary of Project M-7B[1]

kW Saved	kWh Saved	Therms Saved	Project Cost ($)	Energy Cost Savings ($)	Payback Period (years)
n/a	318,820	-34,934	$188,750	$9,173	20.6

Overall recommended operation strategy for the cogeneration and chiller operation:

During Summer Months: Load the chillers and cogeneration system as follows:

A. On-Peak hours and Mid-Peak hours, when the heat is recovered for cooling and cooling loads are high:

   1) Cogeneration system and Absorption Chiller
   2) 130 Ton Electrical Chiller.
   3) 270 Ton Electrical Chiller.

B. Off-peak hours, when cooling loads are low:

   1) 130 Ton Electrical Chiller.
   2) Cogeneration System and Absorption Chiller
   3) 270 Ton Electrical Chiller.

During Winter Months: Load the chillers and cogeneration system as follows:

A. During Mid-Peak hours, when the heat is recovered for cooling and cooling loads are substantial:

   1) Cogeneration system and Absorption Chiller
   2) 130 Ton Electrical Chiller.
   3) 270 Ton Electrical Chiller.

[1] Savings are realized post-implementation of Project M-7A

B. During Mid-Peak hours, when the heat is recovered for cooling and cooling loads are substantial:

1) 130 Ton Electrical Chiller.
2) Cogeneration System and Absorption Chiller
3) 270 Ton Electrical Chiller.

C. During Off-Peak hours, when the cooling loads are low:

1) 130 Ton Electrical Chiller.
2) Cogeneration System and Absorption Chiller
3) 270 Ton Electrical Chiller.

Electrical Project E-1: Implement occupancy based control to vending machines

Project Description:

The EMWD has a total of one cold-drink vending machines and one snack vending machine. The Vending Machines are located in the employee lounge area.

Generally, vending and snack machines are designed to operate constantly (24-hours a day, 365-days a year). A cold beverage vending machine consumes on average 400 watts, costing approximately $200 per year to operate.

To reduce costs associated with the same; this project proposes the implementation of occupancy-based controls (*Misers*) to two machines. Like standard occupancy sensors, these products utilize a Passive Infrared (PIR) Sensor that powers down a machine when the area surrounding it has been vacant for some time (e.g. 15 minutes). Additionally, a sensor also monitors ambient temperature and automatically re-powers the vending machine at one to three hour intervals, independent of occupancy, to ensure that the vended product stays cold. In addition, a current sensor (which determines if the vending machines compressor is operating) will delay power down of the machine until the compressor has completed its cooling cycle.

For a series machines (typically limited to four), *Misers* utilize an embedded Sensor Repeater, which allows a machine to be controlled from the PIR sensor of any other *Miser* in the bank. For outdoor locations where the *Miser* may be exposed to water, a waterproof PIR sensor and controller housing can be used.

Refer to Appendix E for more additional product information.

Analysis Summary

Table 5.20 – Analysis summary of proposed Low Cost Project E-1

kW Saved	kWh Saved	Electricity Rate ($/kWh)	Therms Saved	Natural Gas Rate ($/Therm)	Project Cost without incentive ($)	Annual Cost Savings ($)	Payback Period without Incentive (years)	Approximate Incentives ($)	Project Cost with incentive ($)	Payback Period with Incentives (years)
n/a	1,475	$0.084	n/a	n/a	$458	$124	3.7	$133	$325	2.6

Section 6 – Rebates, Incentives, Grants, and Special Funding Opportunities

CEC's Energy Efficiency Financing Program

The California Energy Commission's (CEC) Energy Efficiency Financing Program provides financing for schools, hospitals, cities, counties, special districts, and public care institutions through low-interest loans for the installation of energy-saving measures. Projects eligible for loans include but are not limited to lighting, motors, building insulation, HVAC modifications, automated EMS systems and controls, energy generation, and renewable energy projects.

Refer to http://www.energy.ca.gov/efficiency/financing/index.html for more information and availability of the funds.

Southern California Edison's (SCE's) Government & Institution – Energy Management Express Solution Incentive Program

SCE's Government & Institutions – Energy Management Express/Customized Solution Incentive Program provide customers cash incentive payments for energy efficiency projects involving the installation of new, high-efficiency equipment or systems. Incentives are available for qualifying equipment in the following areas: lighting, air conditioning, food service equipment, refrigeration, and premium efficiency motors. Express solution incentives are paid on a per-unit basis (e.g., lamp, fixture, and horsepower); whereas, customized solution incentives are paid on a project-by-project basis and actual kWh and kW savings. The District is encouraged to also investigate itemized rebates as they may result higher incentives; the projects in this study are analyzed for higher incentives. As is indicated in the following table, incentive rates vary with the type of measure implemented:

Measures must exceed applicable government and/or industry minimum efficiency standards to qualify. Complete Express Solutions eligibility requirements are available online at www.sce.com/Express_Solutions. Itemized incentives do not require a pre-installation inspection of existing equipment unless a prior project at the same facility with similar equipment received an incentive. Projects qualifying for more than 47,000 in incentives will require a post-installation inspection of the new equipment. Projects under 47,000 will be subject to a random post-installation inspection.

For customized solution program, pre- and post- inspections are required and monitoring/inspection of the installed equipment may be required.

It is important to note that if any of the project measures are included in applications to any other California end user energy efficiency rebate program, the project may be ineligible for participation. Other California end user energy efficiency programs include, but are not limited to, any end user program offered by or through Southern California Gas Company, Southern California Edison, Pacific Gas & Electric Company, San Diego Gas and Electric, the California Energy Commission, and the California Public Utilities Commission, including, Local Programs funded by the public goods charge (PGC).

For additional details including project applicability, funding availability, and important dates and deadlines, the District is strongly recommended to speak with its utility representative.

Refer to http://www.sce.com/business/ems/appdownload.html for more information.

Table 6.1 – SCE's Express Solution Incentive program rebates by category

Measure Category	Incentive ($/unit of measure)
Lighting	
Linear Fluorescents	
T8 to T8 reduced reduced wattage interior lamp only retrofit:	
32-watts to 28-watts	$1.00/lamp
Compact Fluorescents	
≤ 100-watt lamp existing, up to 70-watt replacement fixture	$20.00/fixtue
101-175 watt lamp existing, up to 128-watt replacement fixture	$35.00/fixtue
LED Exit Signs	
Incandescent existing	$27.00/fixtue
Compact Fluorescent existing	$15.00/fixtue
T5 High out put fixtures-replacement for existing Metal Halides	
≤ 100-watt lamp existing, up to 64-watt replacement fixture	$20.00/fixtue
101-175 watt lamp existing, up to 128-watt replacement fixture	$35.00/fixtue
176-399 watt lamp existing, 192-watt replacement fixture	$50.00/fixtue
400 watt lamp existing, 245- to 360-watt replacement fixture	$50.00/fixtue
Lighting Controls	
Occupancy Sensor-Wall Box Lighting Sensor	$20.00/sensor
Occupancy Sensor-Wall or Ceiling Mounted Sensor, < 500 watts controlled	$35.00/sensor
Photocell	$11.00/photocell
Timeclock	$36.00/photocell
Refrigeration	
Evaporator fan controller for walk-in coolers and freezers	$75.00/controller
Vending Machine controller	$100.00/controller
HVAC	
Premium Efficiency Motors	
1hp - 2hp	$ 35/motor
3 hp	$ 40/motor
5 hp	$ 50/motor
7.5 hp	$ 60/motor
10 hp	$ 70/motor
15 hp	$ 80/motor
20 hp	$ 90/motor
25 hp	$ 135/motor
30 hp	$ 230/motor
VFD's	
Variable frequency drive	$ 80/hp
Package terminal air conditioners and package heat pumps	$ 100/unit

Table 6.2 – SCE's Customized Solution Incentive program rebates by category

Measure Category	Incentive	
	$/kWh	$/kW
Lighting		
Lighting Retrofit & De-lamping	0.05	100
Lighting Controls	0.05	100
HVAC		
HVAC Retrofits		
A-C Compressors replacements	0.15	100
Economizer	0.09	100
Evaporator Cooling Units	0.15	100
HVAC Controls		
Energy Management Systems	0.09	100
CO2 Sensors	0.09	100
VFD's	0.09	100

Appendix A

Baseline Energy Use &
Utility Company Rate Schedules

Electricity Use Summary

EMWD Facility Meter #	Gross Square Feet	Rate Schedule	Electricity (kWh)	Cost	kWh/ GSF	$/GSF	Site Btu/GSF	Rate ($/kWh)
V349E-005334	166,800	TOU-GS-3B	542,637	$93,755	3.25	$0.562	11,100	$0.173
V345N-001191	166,800	TOU-8-S	2,029,556	$425,510	12.17	$2.551	41,516	$0.210
TOTAL	166,800	-	2,572,193	$519,265	15.42	$3.113	52,616	$0.202

Electricity Use Summary (generated from Micro Turbines)

EMWD Facility Meter #	Gross Square Feet	Rate Schedule	Electricity (kWh)	Cost	kWh/ GSF	$/GSF	Site Btu/GSF	Rate ($/kWh)
3022-9597-06	166,800	-	2,332,111	n/a	13.98	n/a	47,705	n/a
TOTAL	166,800	-	2,332,111	n/a	13.98	n/a	47,705	n/a

Natural Gas Use Summary

EMWD Facility Meter #	Gross Square Feet	Rate Schedule	Natural Gas (Therms)	Cost	Therms/ GSF	$/GSF	Site Btu/GSF	Rate ($/Therm)
10795474	166,800	GN-10	57,929	$39,933	0.347	$0.239	34,730	$0.689
10842544	166,800	GT-15	337,964	$146,867	2.026	$0.880	202,616	$0.435
TOTAL	166,800	-	395,893	$186,799	2.373	$1.120	237,346	$0.472

Total Energy Use Summary

Facility	Gross Square Feet	Total Energy (MMBTU)	Total Energy Cost	Total Energy Cost per GSF	kBTU/ GSF
EMWD	166,800	56,323	$706,064	$4.23	337.67

Site Name: **Eastern Municipal Water District (Chiller 2&3 Only)**
Service Address: 2270 Trumble Rd.
Perris , CA 92570
Service Type: **Electricity**
Service Provider: SCE
Rate Schedule: TOU-GS-3A
SCV Account #: 30-10008-104
Meter #: V349E-005334

				ENERGY						DEMAND						ELECTRIC CHARGES	
No.	Month	Season [2]	Days Billed	Total Usage	Summer On Peak	Summer Mid Peak	Summer Off Peak	Winter Mid Peak	Winter Off Peak	Max Demand	Summer On Peak	Summer Mid Peak	Summer Off Peak	Winter Mid Peak	Winter Off Peak	Electric Charges [1]	Energy Rate
				kWh	*kWh*	*kWh*	*kWh*	*kWh*	*kWh*	*kW*	*kW*	*kW*	*kW*	*KW*	*kW*	*$*	*$/kWh*
1	Jan-09	W	31	39,314	0	0	0	18,225	21,089	164	0	0	0	0	0	$ 5,302	$ 0.135
2	Feb-09	W	28	42,819	0	0	0	20,819	22,000	175	0	0	0	0	0	$ 5,714	$ 0.133
3	Mar-09	W	31	46,255	0	0	0	26,598	19,657	182	0	0	0	0	0	$ 6,129	$ 0.133
4	Apr-09	W	30	44,752	0	0	0	23,023	21,729	223	0	0	0	0	0	$ 6,690	$ 0.149
5	May-09	W	31	48,644	216	406	451	21,741	25,830	207	0	0	0	0	0	$ 6,858	$ 0.141
6	Jun-09	S	30	35,938	7,771	9,518	18,649	0	0	218	0	0	0	0	0	$ 10,213	$ 0.284
7	Jul-09	S	31	73,482	22,429	23,675	27,378	0	0	247	0	0	0	0	0	$ 15,286	$ 0.208
8	Aug-09	S	31	44,426	11,874	10,134	22,418	0	0	194	0	0	0	0	0	$ 10,442	$ 0.235
9	Sep-09	S	30	43,761	13,262	11,383	19,116	0	0	231	0	0	0	0	0	$ 11,646	$ 0.266
10	Oct-09	S	31	38,155	273	396	424	16,804	20,258	135	0	0	0	0	0	$ 4,789	$ 0.126
11	Nov-09	S	30	45,620	0	0	0	19,956	25,664	157	0	0	0	0	0	$ 5,513	$ 0.121
12	Dec-08	W	31	39,471	0	0	0	17,847	21,624	148	0	0	0	0	0	$ 5,173	$ 0.131
TOTAL			365	542,637	55,825	55,512	88,436	165,013	177,851	2,281	0	0	0	0	0	$ 93,755	$ 0.173

[1] Total Electric Charges contains all charges including, but not limited to, energy charges, demand charges, service charges, late payments, and applicable taxes.
[2] Summer: Jun 1 through Oct 1; Winter: Oct 1 through Jun 30

Site Name: **Eastern Municipal Water District (Building Load)**
Service Address: 2270 Trumble Rd.
Perris , CA 92570
Service Type: **Electricity - Cogen Production**

No.	Month	Season [2]	Days Billed	Total Production
				kWh
1	Jan-09	W	31	176,201
2	Feb-09	W	28	269,090
3	Mar-09	W	31	227,858
4	Apr-09	W	30	216,280
5	May-09	W	31	189,385
6	Jun-09	S	30	204,267
7	Jul-09	S	31	223,119
8	Aug-09	S	31	211,187
9	Sep-09	S	30	184,860
10	Oct-09	S	31	129,400
11	Nov-09	S	30	145,679
12	Dec-08	W	31	154,785
				2,332,111

Site Name: **Eastern Municipal Water District (Building Load)**
Service Address: 2270 Trumble Rd.
Perris , CA 92570
Service Type: **Electricity**
Service Provider: SCE
Rate Schedule: TOU-8-Standby
SCV Account #: 3-008-7517-40
Meter #: V345N-001191

				ENERGY						DEMAND						ELECTRIC CHARGES	
No.	Month	Season [2]	Days Billed	Total Usage	Summer On Peak	Summer Mid Peak	Summer Off Peak	Winter Mid Peak	Winter Off Peak	Max Demand	Summer On Peak	Summer Mid Peak	Summer Off Peak	Winter Mid Peak	Winter Off Peak	Electric Charges [1]	Energy Rate
				kWh	*kWh*	*kWh*	*kWh*	*kWh*	*kWh*	*kW*	*kW*	*kW*	*kW*	*KW*	*kW*	*$*	*$/kWh*
1	Jan-09	W	31	125,518	0	0	0	72,806	52,712	640	0	0	0	640	584	$ 21,624	$ 0.172
2	Feb-09	W	28	62,032	0	0	0	49,784	12,248	616	0	0	0	616	560	$ 18,694	$ 0.301
3	Mar-09	W	31	70,658	0	0	0	53,608	17,050	776	0	0	0	776	384	$ 15,764	$ 0.223
4	Apr-09	W	30	115,943	0	0	0	78,410	37,533	888	0	0	0	888	568	$ 24,146	$ 0.208
5	May-09	W	31	185,124	3,396	2,664	706	115,526	62,832	928	792	776	200	928	560	$ 33,146	$ 0.179
6	Jun-09	S	30	132,315	53,092	43,812	35,411	0	0	848	848	696	360	0	0	$ 41,382	$ 0.313
7	Jul-09	S	31	145,892	57,125	45,405	43,362	0	0	808	808	676	460	0	0	$ 44,403	$ 0.304
8	Aug-09	S	31	191,014	71,790	57,398	61,826	0	0	768	768	656	560	0	0	$ 47,425	$ 0.248
9	Sep-09	S	30	206,252	76,688	69,148	60,416	0	0	1,016	1,016	824	648	0	0	$ 53,358	$ 0.259
10	Oct-09	S	31	208,946	2,576	2,500	958	118,362	84,550	784	496	424	312	784	552	$ 41,940	$ 0.201
11	Nov-09	S	30	308,396	2,288	2,250	1,479	156,710	145,669	796	248	212	156	796	572	$ 44,022	$ 0.143
12	Dec-08	W	31	277,466	0	0	0	132,868	144,598	808	0	0	0	808	592	$ 39,607	$ 0.143
TOTAL			365	2,029,556	266,955	223,177	204,158	778,074	557,192	9,676	4,976	4,264	2,696	6,236	4,372	$ 425,510	$ 0.210

[1] Total Electric Charges contains all charges including, but not limited to, energy charges, demand charges, service charges, late payments, and applicable taxes.
[2] Summer: Jun 1 through Oct 1; Winter: Oct 1 through Jun 30

Site Name: **Eastern Municipal Water District**
Service Address: 2270 Trumble Rd.
Perris , CA 92570
Service Type: **Gas**
Service Provider: SoCalGas
Rate Schedule: GN-10
Billing Account #: 190-723-7100-8
Meter #: 10795474

No.	Month	Season	Days Billed	Total Use	Gas Cost [1]	Historical Gas Rate
				Therms	*$*	*$/Therm*
1	Jan-09	W	31	10,172	$ 7,785	$ 0.765
2	Feb-09	W	28	10,042	$ 6,705	$ 0.668
3	Mar-09	W	31	6,543	$ 4,146	$ 0.634
4	Apr-09	W	30	5,472	$ 3,310	$ 0.605
5	May-09	S	31	3,258	$ 1,978	$ 0.607
6	Jun-09	S	30	3,126	$ 2,007	$ 0.642
7	Jul-09	S	31	2,020	$ 1,381	$ 0.683
8	Aug-09	S	31	1,722	$ 1,234	$ 0.717
9	Sep-09	S	30	1,718	$ 1,156	$ 0.673
10	Oct-09	W	31	3,071	$ 2,089	$ 0.680
11	Nov-09	W	30	4,590	$ 3,408	$ 0.742
12	Dec-08	W	31	6,195	$ 4,735	$ 0.764
TOTAL			365	57,929	$ 39,933	$ 0.689

[1] Total Cost contains all charges including, but not limited to, natural gas charges, customer charges, state regulatory fees, and Public Purpose Program Surcharges

Site Name: **Eastern Municipal Water District**
Service Address: 2270 Trumble Rd.
Perris , CA 92570
Service Type: **Gas**
Service Provider: CoGen
Rate Schedule: GT-15
Billing Account #: 016-467-8549-1
Meter #: 10842544

No.	Month	Season	Days Billed	Total Use	Gas Cost [1]	Historical Gas Rate
				Therms	*$*	*$/Therm*
1	Jan-09	W	31	28,078	$ 17,137	$ 0.610
2	Feb-09	W	28	31,178	$ 14,152	$ 0.454
3	Mar-09	W	31	33,996	$ 14,202	$ 0.418
4	Apr-09	W	30	29,966	$ 10,862	$ 0.362
5	May-09	S	31	26,449	$ 8,499	$ 0.321
6	Jun-09	S	30	32,314	$ 12,657	$ 0.392
7	Jul-09	S	31	37,163	$ 15,160	$ 0.408
8	Aug-09	S	31	32,151	$ 14,374	$ 0.447
9	Sep-09	S	30	29,394	$ 10,299	$ 0.350
10	Oct-09	W	31	16,798	$ 7,584	$ 0.452
11	Nov-09	W	30	19,625	$ 10,345	$ 0.527
12	Dec-08	W	31	20,852	$ 11,597	$ 0.556
TOTAL			365	337,964	$ 146,867	$ 0.435

[1] Total Cost contains all charges including, but not limited to, natural gas charges, customer charges, state regulatory fees, and Public Purpose Program Surcharges

Appendix B

Energy Balance

Electricity Energy Balance Summary - *kWh*

End Use	Fans	A/C Equipment [1]	Space Heating	Lighting	All Others [2]	TOTAL kWh
EMWD	1,637,944	1,219,557	14,032	1,041,266	991,506	**4,904,304**
% of Total	*33.4%*	*24.9%*	*0.3%*	*21.2%*	*20.2%*	
TOTAL	**1,637,944**	**1,219,557**	**14,032**	**1,041,266**	**991,506**	**4,904,304**
% of Total	*33.4%*	*24.9%*	*0.3%*	*21.2%*	*20.2%*	

[1] Includes heat pump use during the cooling season

[2] "All Others" includes office equipment (e.g., computers, printers, copiers), domestic water heater heaters, vending machines, plug loads, data center loads, laboratory fume hoods, cogeneration system compressors, and other miscellaneous equipment not accounted for

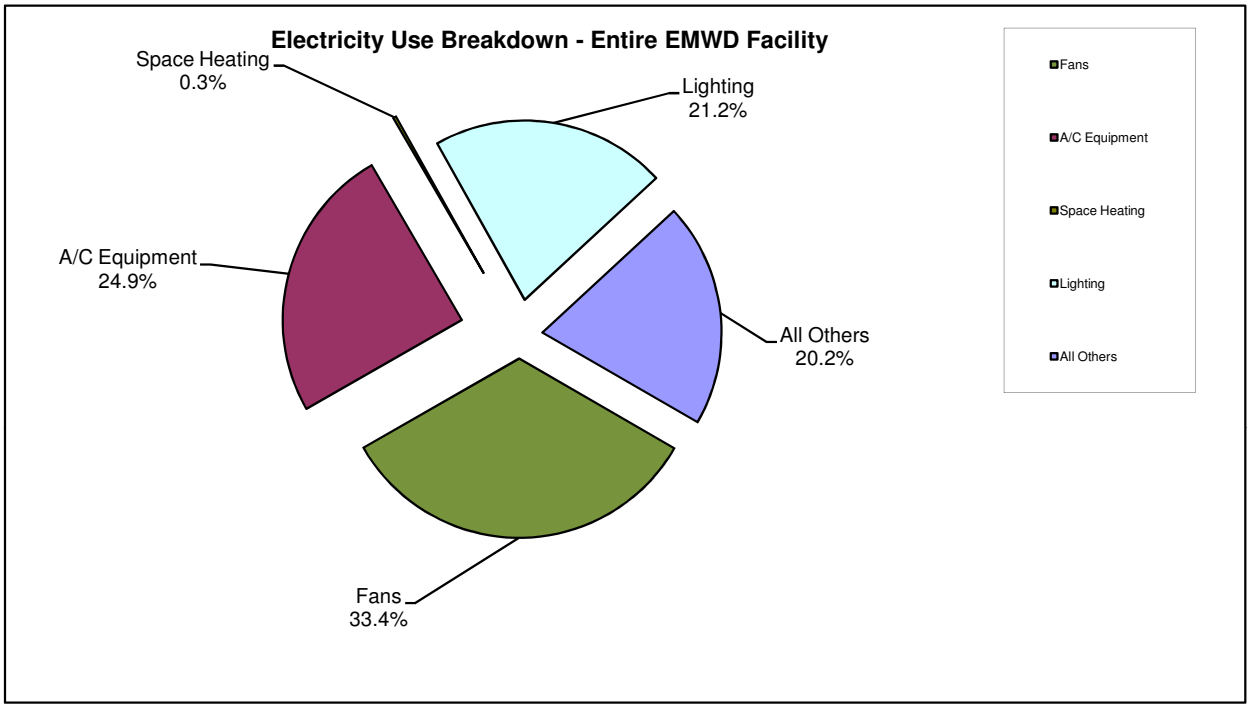

Natural Gas Energy Balance Summary - *Therms*

End Use	Space Heating	All Others	TOTAL Therms
EMWD	42,615	15,314	**57,929**
% of Total	*73.6%*	*26.4%*	
TOTAL	**42,615**	**15,314**	**57,929**
% of Total	*73.6%*	*26.4%*	

[1] *"All Others"* includes domestic hot water (where applicable)

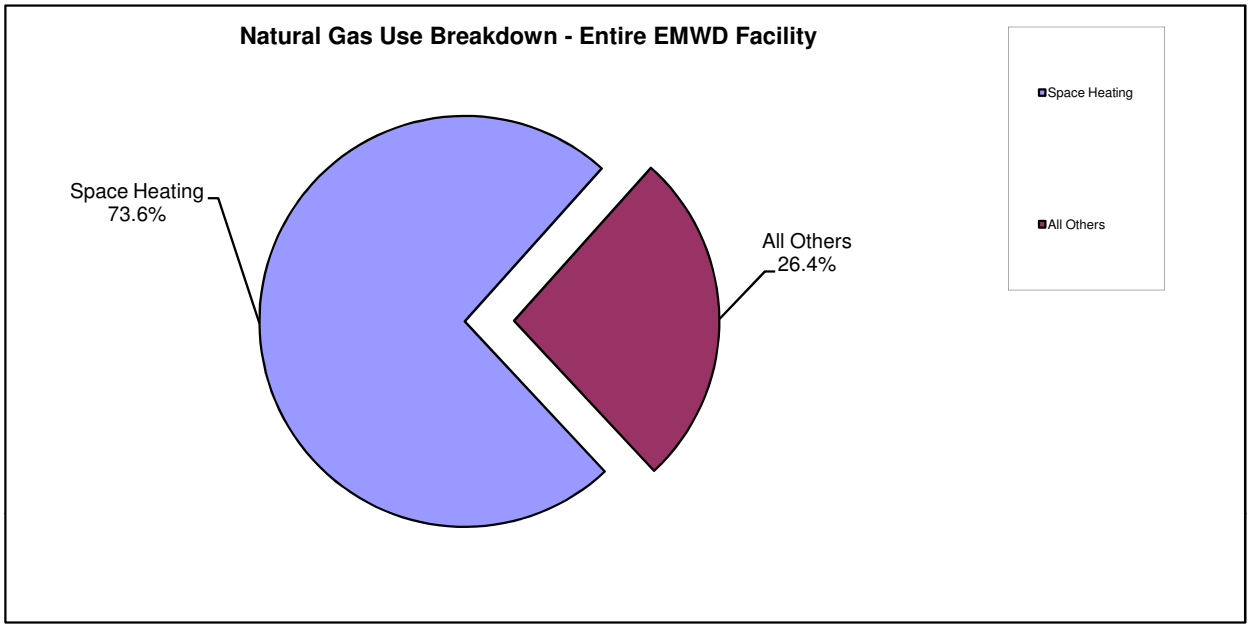

Summary of HVAC Systems

Electric Use Summary

		A/C Tons				HVAC kWh				
Facility	**GSF**	**A/C Tons**	**Heat Pump Tons**	**Total Tons**	**Total Tons / 1000 sq. ft.**	**A/C kWh** [1]	**Fan & Pump kWh**	**Heating kWh**	**Total HVAC kWh**	**kWh / Sq. ft.**
EMWD	166,800	611	37	611	3.7	1,219,557	1,637,944	14,032	2,871,532	17.2
Total	**166,800**	**611**	**37**	**611**	**3.7**	**1,219,557**	**1,637,944**	**14,032**	**2,871,532**	**17.2**

Natural Gas Use Summary

Facility	GSF	Total Installed MBH (Space Heating)	Total MBH / 1000 sq. ft.	Total Therms / Year
EMWD	166,800	5,509	33.0	42,615
Total	**166,800**	**5,509**	**33.0**	**42,615**

List of HVAC Systems - Eastern Municipal Water District

Exhaust Fan Electricity Use

Fan Type	Facility	Area (Sq. Ft.)	Fan HP / 1000 Sq. Ft.	Total Fan HP	Motor Eff.	Average Use Hours	kWh/ Year [1]
Exhaust Fan	Facility Wide	166,800	0.10	16.68	84%	8,760	116,789

HVAC Energy Use

			A/C Energy Use						*Fan/Pump Energy Use*					*Gas Heat Energy Use*				
Unit ID	**Area Served**	**# of Units**	**Ave. Tons** *(per unit)*	**SEER (EER)** [2]	**kW / Ton**	**Ave. Load Factor**	**Annual Use Hours**	**kWh/ Year**	**Motor HP**	**Motor Eff.**	**Ave. Load Factor**	**Annual Use Hours**	**kWh/ Year** [1]	**Max Input (MBH)**	**AFUE / Eff.**	**Ave. Load Factor**	**Annual Use Hours**	**Therms/ Year**
Chiller																		
Abosorption Chiller*	Facility Wide	1	137.42															
CHW Pump - Primary	Facility Wide	2							7 1/2	89%	60%	8,322	62,780					
Cooling Tower - Fan		1							15	89%	60%	8,322	62,780					
Cooling Tower - Pump		1							30	84%	60%	8,322	133,033					
Air Cooled Chiller 2	Facility Wide	1	130.0	10.0	1.20	40.0%	8,322	519,293										
CHW Pump - Primary	Facility Wide	2							5	84%	40%	8,322	29,563					
Air Cooled Chiller 3	Facility Wide	1	240.0	10.0	1.20	20.0%	8,322	479,347										
CHW Pump - Primary	Facility Wide	2							10	84%	20.0%	8,322	29,563					
CHW Pump - Secondary	Facility Wide	2							25	89%	40%	8,322	139,510					
TOTAL		13						998,640					457,229					

*The max output of a 235 Ton Chiller, based upon the heat available.

Boiler																		
Boiler - 1	O&M	1												1,825	85%	10.0%	8,322	15,188
HW Pump - 1	O&M	1							3	82.5%	80%	8,322	18,060					
HW Pump - 2	O&M	1							3	82.5%	60%	8,322	13,545					
Boiler - 2	Administration	1												1,670	70%	12.8%	8,322	17,808
HW Pump - 3	Administration	1							3	82.5%	80%	8,322	18,060					
HW Pump - 4	Administration	1							3	82.5%	60%	8,322	13,545					
TOTAL		6											63,211					32,996

Air Handler Units																		
AHU - 1	Office	1							25	89%	80%	8,322	139,510					
AHU - 2	Laboratory	1							25	89%	80%	8,322	139,510					
AHU - 3	Employee Support	1							10	89%	80%	8,322	55,804					
AHU - 4	1&2 Floor North Wing	1							25	89%	80%	8,322	139,510					
AHU - 5	1&2 Floor South Wing	1							25	89%	80%	8,322	139,510					
AHU - 6	1&2 Floor East Wing	1							20	89%	80%	8,322	111,608					
TOTAL		6											725,454					

List of HVAC Systems - Eastern Municipal Water District

Air Cooled Condenser																		
CU-1	OMC-Room 155 - Center Control (IOC)	1	12.5	11.0	1.09	60%	8,760	71,673	2	80%	80%	8,760	13,070					
CU-2	OMC Room 159 - Telephone Room	1	6.0	11.0	1.09	60%	8,760	34,403	1	80%	80%	8,760	6,535					
TOTAL		2						106,076					19,605					
CRAC (Computer Room Air Conditioner)																		
ECS-1 Back Up (DX)	Computer Room	1	30.0	9.6	1.25	60%	0	0	7 1/2	80%	80%	0	0					
CRU-1 - Chilled Water	Computer Room	1	30.0						10	86%	80%	8,760	60,790					
CRU-2 - Chilled Water	Computer Room	1	25.0						7 1/2	86%	80%	8,760	45,593					
Booster Pump		1							2 1/2	86%	80%	8,760	15,198					
TOTAL		4						0					121,581					
Fan Coil Units																		
FC-1	Mail Room	1							1/2	82%	60%	3,458	944					
FC-2	CAD Room	1							1/2	82%	65%	3,458	1,022					
FC-3	Plotter Room	1							1/4	82%	70%	3,458	551					
FC-5	Shop#2 Intstru Shop	1							3/4	82%	65%	3,563	1,580					
FC-6	Shop#2 Intstru Shop	1							3/4	82%	65%	3,563	1,580					
TOTAL		5											5,678					
Unit Heaters																		
UH-1	Warehouse Purchasing	1							1/2	82%	15%	3,563	243	130	70%	45%	1,069	625
UH-2	Warehouse Purchasing	1							1/2	82%	12%	3,563	195	100	70%	45%	1,069	481
TOTAL		2											438	230				1,106
Direct Fired Units																		
DH-1	Remote Building # 505	1							3	82%	15%	3,563	1,459	576	70%	45%	1,069	2,771
DH-2	Remote Building # 506	1							15	82%	12%	3,563	5,835	1078	70%	45%	1,069	5,186
TOTAL		2											7,294	1654				7,957
Radiant Heater																		
RH-1	Workshop	1												30	70%	40%	1,069	128
RH-2	Workshop	1												100	70%	40%	1,069	428
TOTAL		2												130				556

List of HVAC Systems - Eastern Municipal Water District

			A/C Energy Use						Fan/Pump Energy Use					Electric Heating Energy Use				
Unit ID	**Area Served**	**# of Units**	**Ave. Tons**	**SEER (EER)** [2]	**kW / Ton**	**Ave. Load Factor**	**Annual Use Hours**	**kWh/ Year**	**Motor HP**	**Motor Eff.**	**Ave. Load Factor**	**Annual Use Hours**	**kWh/ Year** [1]	**Heat Input (MBH)**	**COP**	**Ave. Load Factor**	**Annual Use Hours**	**kWh/ Year**
Heat Pumps																		
HP-1	Security Area	1	3.5	9.0	1.33	60%	2,494	6,984	1/8	82%	80%	3,563	324	29	2.3	40%	1,069	1,580
HP-2	Office 208 Shop #1	1	1.0	8.7	1.38	60%	2,494	2,064	1/10	82%	80%	3,563	259	11	2.7	40%	1,069	511
HP-3	Office 200 Shop #1	1	5.0	9.0	1.33	60%	2,494	9,978	1 1/10	82%	80%	3,563	2,853	30	3	40%	1,069	1,232
HP-4	Office 315 Shop #2	1	1.2	8.2	1.46	60%	2,494	2,628	1/8	82%	80%	3,563	324	12	2.4	40%	1,069	627
HP-5	Warehouse	1	2.0	9.0	1.33	60%	2,494	3,991	7/10	82%	80%	3,563	1,815	9	2.9	40%	1,069	389
HP-6	Remote build metal shop	1	5.0	9.0	1.33	60%	2,494	9,978	1 1/10	82%	80%	3,563	2,853	58	2	40%	1,069	3,634
HP-7	RB Employee Centre	1	0.6	9.5	1.26	60%	2,494	1,134	1/15	82%	80%	3,563	173	8	2.8	40%	1,069	349
HP-8	Office #406 Warehouse	1	1.0	8.7	1.38	60%	2,494	2,064	1/10	82%	80%	3,563	259	11	2.7	40%	1,069	511
HP-11	Office 309	1	5.0	9.0	1.33	60%	2,494	9,978	1	82%	80%	3,563	2,593	56	2.7	40%	1,069	2,599
HP-12	Office 309 Shop # 2	1	5	9.0	1.33	60%	2,494	9,978	1	82%	80%	3,563	2,593	56	2.7	40%	1,069	2,599
HP-13	Computer Room	1	5	9.0	1.33	60%	8,760	35,040	1	82%	80%	8,760	6,376	56	2.7	40%	0	0
HP-14	SCADA Room	1	3	9.0	1.33	60%	8,760	21,024	3/4	82%	80%	8,760	4,782	36	2.7	40%	0	0
TOTAL		12						114,841					25,205					14,032

Evaporative Coolers

Unit ID	**Area Served**	**# of Units**	Blower HP (per Unit)	Pump HP (per unit)	Total HP (per unit)	Annual Use Hours	Total kWh *
EC-1 to EC-6	Workshop	6	7.50	0.10	7.60	2,494	95,461
Total		6					95,461

Notes:

[1] Estimated kWh = [HP x 0.746 x LF / Eff] x Usage Hours, where

[2] "EER" (energy efficiency ratio) is noted for units having a cooling capacity greater than 5 tons; "SEER" (seasonal energy efficiency ratio) is noted for smaller units (5 tons or less)

[3] Equipment data based on as-built plans and site observations

[4] Cooling and heating efficiencies estimated based on age and condition of the units

[5] Calculation of equipment use hours is presented in Appendix-B

HVAC Equipment Usage Hours Calculations

Site	Area Served	Operational Hours	Total Hours per Day	Total Days per Year	Cooling Days per Year	Heating Days per Year	Extreme Heating Days per Year [1]	Average Use Factor during occupied schedule [1]					Total Cooling Hours [2]	Total Gas Heating Hours [3]	Total Electric Heating Hours [3]	Total Extreme Heating Hours	Total Fan Hours [4]
								Cooling	Std. Gas Heating	Std. Electric Heating	Extreme Electric Heating	Fans					
Admin Building (Mon-Fri)	All	6AM to 8PM	14	260	182	78	n/a	95%	95%	95%	n/a	95%	2,421	1,037	1,037	n/a	3,458
Admin Building (Sat-Sun)	All	6AM to 8PM	0	105	74	32	n/a	95%	95%	95%	n/a	95%	0	0	0	n/a	0
Admin Building (TOTAL)	-	-	-	365	256	110	n/a	-	-	-		-	2,421	1,037	1,037	n/a	3,458
Operation and Maintenance(Mon-Fri)	All	6AM to 8PM	14	260	182	78	n/a	95%	95%	95%	n/a	95%	2,421	1,037	1,037	n/a	3,458
Operation and Maintenance(Sat-Sun)	All	6AM to 8PM	0	105	74	32	n/a	95%	95%	95%	n/a	95%	0	0	0	n/a	0
Operation and Maintenance(TOTAL)	-	-	-	365	256	110	n/a	-	-	-		-	2,421	1,037	1,037	n/a	3,458
O&M Shops(Mon-Fri)	All	5AM to 6PM	13	260	182	78	n/a	95%	95%	95%	n/a	95%	2,248	963	963	n/a	3,211
O&M Shops(Only Sun)	All	7AM to 2PM	7	53	37	16	n/a	95%	95%	95%	n/a	95%	247	106	106	n/a	352
Operation and Maintenance(TOTAL)	-	-	-	313	219	94	n/a	-	-	-		-	2,494	1,069	1,069	n/a	3,563

Notes

[1] "Use Factor" is the percentage of time the equipment is "Programmed On" vs. the occupancy schedule. Typically based on the existing control method used (i.e., manual or auto).

HVAC on auto controls (e.g., programmable thermostats, DDC/EMS, etc.) will typically be programmed to operate throughout the occupancy period less any downtimes for maintenance or repairs

HVAC on manual controls (e.g., manual thermostats, twist-timers, toggle switch, etc.) will generally have a lower % than auto controls given that HVAC use is based on occupant patterns and preferences.

"Use Factor" does not account for "Off" times associated with standard On/Off cycling of equipment. On/Off cycling is accounted for in the "Load Factor" calculation

[2] Total cooling operating hours estimated as follows: Hours per Day x (Cooling Only Days per Year) x Ave. Use Factor

[3] Total Heating Operating Hours estimated as follows: Hours per Day x (Heating Only Days per Year) x Ave. Use Factor

[4] Total Fan Operating Hours estimated as follows: Hours per Day x Total Days per Year x Ave. Use Factor

Appendix C

Energy Efficiency Measure Calculations

APPENDIX C

ENGINEERING CALCULATIONS

LIGHTING PROJECTS - ENERGY AND COST SUMMARY BY CONVERSION TYPE (CELITE)

LIGHTING PROJECTS AT EMWD 1

LIGHTING PROJECTS - CONTROL TYPE MATERIAL AND LABOR COST SUMMARY (CELITE)

LIGHTING PROJECTS AT EMWD 2

LIGHTING PROJECTS - MATERIAL AND LABOR COST SUMMARY (CELITE)

LIGHTING PROJECTS AT EMWD 3

OTHER LIGHTING PROJECT CALCULATIONS

LIGHTING PROJECT L-3: (VISUAL 3D RESULT'S) 6

MECHANICAL PROJECTS - COSTS AND SAVINGS SUMMARY

MECHANICAL PROJECT M-1: (EMS) 10
MECHANICAL PROJECT M-2: (OPTIMIZATION CONTROL) 12
MECHANICAL PROJECT M-3: (TURBOCOR COMPRESSOR) 14
MECHANICAL PROJECT M-4: (GARAGE DOOR SENSOR) 17
MECHANICAL PROJECT M-5: (BOILER) 19
MECHANICAL PROJECT M-6: (VFDS) 21

ELECTRICAL PROJECTS - COSTS AND SAVINGS SUMMARY

ELECTRICAL PROJECT E-1: (VENDING MACHINE OCCUPANCY SENSOR) 24

NOTE:

PROJECT COSTS AND SAVINGS FOR ***LIGHTING PROJECTS L-1 TO L-5*** WERE DETERMINED WITH USE OF LIGHTING AUDIT SOFTWARE (CELITE™). A SUMMARY OF COST AND SAVINGS IS PROVIDED IN APPENDIX-C. A ROOM-BY-ROOM DETAILED AUDIT IS PRESENTED IN APPENDIX-F.

Conversion Type Energy and Cost Summary

Facility: *East Municipal Water District*

Convert From	Convert To	Fixture Retrofit Quantity	Demand Before (kW)	Demand After (kW)	Demand Savings (kW) with Diversity	Retrofit Energy Savings (kWh)	Retrofit Cost ($)	Retrofit Cost Savings ($)	Simple Payback (Years)
1-F40T12	1-F28T8	255	10.7	5.6	5.1	25724.4	$15,044.96	$3,601.41	4.2
1-F96T12	2-F32T8	1	0.1	.	.	97.5	$64.89	$13.65	4.8
2-F17T8	NO CHANGE	18	0.5	0.5	.	.	$0.00	$0.00	.
2-F40T12	2-F28T8	263	19.1	10.8	8.3	29891.5	$16,585.53	$4,184.87	4
2-F40T12-U	2-F32T8-U	137	9.9	6.6	3.3	13971.4	$9,896.92	$1,955.97	5.1
2-F96T12	4-F32T8	66	8.6	6.3	2.3	7507.5	$5,183.72	$1,051.06	4.9
3-F40T12	3-F28T8	104	11.9	6.4	5.4	21375.1	$7,675.04	$2,992.51	2.6
3-F40T12-AB	3-F28T8-AB	652	74.7	41	33.7	137982.1	$61,424.13	$19,317.48	3.2
4-F40T12-AB	4-F28T8	55	7.9	4.6	3.4	10816.6	$4,472.49	$1,514.36	3
HPS-250W	LED-100W	57	16.8	5.7	11.1	40569.8	$79,484.30	$5,679.77	14
HPS-400W	LED-147W	29	12.8	4.3	8.5	31014.1	$50,366.84	$4,341.97	11.6
HPS-50W	NO CHANGE	17	1	1	.	.	$0.00	$0.00	.
INC-75W	SI-13W	82	6.2	1.5	4.7	17046	$1,875.20	$2,386.41	0.8
MH-1000W	NO CHANGE	56	60.5	60.5	.	.	$0.00	$0.00	.
MH-250W	New-3-F54T5-HO	38	11.2	6.9	4.3	13832	$22,326.89	$1,936.48	11.5
MH-400W	LED-147W	12	5.5	1.8	3.7	13621.8	$20,841.45	$1,907.05	10.9
MH-400W	New-4-F54T5-HO	42	19.2	9.8	9.4	30576	$25,754.78	$4,280.64	6
MR16-42W	NO CHANGE	15	0.6	0.6	.	.	$0.00	$0.00	.
PL-13W	NO CHANGE	19	0.3	0.3	.	.	$0.00	$0.00	.
PL-26W	NO CHANGE	116	3.7	3.7	.	.	$0.00	$0.00	.
TOTAL		**2034**	**281.2**	**178**	**103.2**	**.**	**$320,997.14**	**$55,163.63**	**5.8**

By Control Type Costs and Savings

Facility: *East Municipal Water District*

Control Type	*Control Qty*	*Control Cost ($)*	*Control Savings ($)*	*Simple Payback (Years)*
		$0.00	$0.00	.
OS-1	14	$2,645.71	$156.74	16.9
OS-2	107	$30,062.25	$1,251.70	24
OS-3	18	$6,554.01	$666.10	9.8
OS-4	27	$11,593.76	$440.19	26.3
TOTAL	**166**	**$50,855.74**	**$2,514.73**	**20.2**

Project Material and Labor Cost Summary

Facility: *East Municipal Water District*

Material Type	Type Name	Quantity	Material Cost ($)	Unit Material Price ($/Unit)	Labor Cost ($)	Unit Labor Price ($/Unit)	Total Labor Hours	Disposal Cost ($)	Unit Disposal Price ($/Unit)	Sub-Total Retrofit Cost ($)	Indirect Cost ($)	TOTAL Project Cost ($)
PROJECT L-1	*Fluorescent Fixture Retrofits*											
Ballast Disposal - Non PCB	1-F40T12	1011	$0.00	$0.00	$0.00	$0.00	.	$2,527.50	$2.50			
Ballast Disposal - Non PCB	1-F96T12	1	$0.00	$0.00	$0.00	$0.00	.	$5.00	$5.00			
Ballast Disposal - Non PCB	2-F40T12	1266	$0.00	$0.00	$0.00	$0.00	.	$3,165.00	$2.50			
Ballast Disposal - Non PCB	2-F96T12	66	$0.00	$0.00	$0.00	$0.00	.	$330.00	$5.00			
Basic Strategy	Retrofit	1533	$15,330.00	$10.00	$9,581.25	$6.25	383.3	$0.00	$0.00			
New Ballast	1-F28T8 - Electronic IS Low Watt	819	$8,190.00	$10.00	$5,118.75	$6.25	204.8	$0.00	$0.00			
New Ballast	2-F28T8 - Electronic IS Low Watt	819	$8,190.00	$10.00	$5,118.75	$6.25	204.8	$0.00	$0.00			
New Ballast	2-F28T8(T) - Electronic IS Low Watt	44	$440.00	$10.00	$458.33	$10.42	18.3	$0.00	$0.00			
New Ballast	2-F32T8 - Electronic IS Low Watt	116	$1,160.00	$10.00	$725.00	$6.25	29	$0.00	$0.00			
New Ballast	3-F28T8 - Electronic IS Low Watt	104	$1,248.00	$12.00	$650.00	$6.25	26	$0.00	$0.00			
New Ballast	4-F28T8 - Electronic IS Low Watt	55	$770.00	$14.00	$343.75	$6.25	13.8	$0.00	$0.00			
New Ballast	4-F28T8(T) - Electronic IS Low Watt	48	$672.00	$14.00	$500.00	$10.42	20	$0.00	$0.00			
New Ballast	4-F32T8 - Electronic IS Low Watt	66	$924.00	$14.00	$412.50	$6.25	16.5	$0.00	$0.00			
New Ballast	4-F32T8(T) - Electronic IS Low Watt	11	$154.00	$14.00	$114.58	$10.42	4.6	$0.00	$0.00			
Old Lamp	F40T12	3269	$0.00	$0.00	$0.00	$0.00	.	$980.70	$0.30			
Old Lamp	F96T12	133	$0.00	$0.00	$0.00	$0.00	.	$106.40	$0.80			
Old Lamp	F17T8	36	$0.00	$0.00	$0.00	$0.00	.	$0.00	$0.00			
Old Lamp	FB40T12	274	$0.00	$0.00	$0.00	$0.00	.	$109.60	$0.40			
New Lamp	F28T8 - 3500 K	3269	$6,538.00	$2.00	$1,362.08	$0.42	54.5	$0.00	$0.00			
New Lamp	F32T8 - 3500 K	266	$399.00	$1.50	$110.83	$0.42	4.4	$0.00	$0.00			
New Lamp	FB32T8 - 3500 K	274	$1,370.00	$5.00	$114.17	$0.42	4.6	$0.00	$0.00			
PROJECT L-1 SUB-TOTAL			**$45,385.00**		**$24,610**			**$7,224**		**$77,219**	**$43,128**	**$120,348**
PROJECT L-2	*INC to CF*											
Old Lamp	75W-A19	82	$0.00	$0.00	$0.00	$0.00	.	$8.20	$0.10			
Retrofit Type	SI-13W	82	$984.00	$12.00	$170.83	$2.08	6.8	$0.00	$0.00			
PROJECT L-2 SUB-TOTAL			$984.00		$170.83			$8.2		**$1,163**	**$712**	**$1,875**

Project Material and Labor Cost Summary

Facility: *East Municipal Water District*

Material Type	Type Name	Quantity	Material Cost ($)	Unit Material Price ($/Unit)	Labor Cost ($)	Unit Labor Price ($/Unit)	Total Labor Hours	Disposal Cost ($)	Unit Disposal Price ($/Unit)	Sub-Total Retrofit Cost ($)	Indirect Cost ($)	TOTAL Project Cost ($)
PROJECT L-3	*Occupancy Sensor Controls*											
Control	OS-1	14	$756.00	$54.00	$192.50	$13.75	3.5	$0.00	$0.00			
Control	OS-2	107	$6,420.00	$60.00	$7,356.25	$68.75	133.8	$0.00	$0.00			
Control	OS-3	18	$1,458.00	$81.00	$1,237.50	$68.75	22.5	$0.00	$0.00			
Control	OS-4	27	$2,160.00	$80.00	$4,455.00	$165.00	81	$0.00	$0.00			
Relay	SP-1	279	$5,580.00	$20.00	$2,557.50	$9.17	46.5	$0.00	$0.00			
PROJECT L-3 SUB-TOTAL			**$16,374.00**		**$15,799**			**$0**		**$32,173**	**$24,263**	**$56,436**
PROJECT L-4	*Metal Halide to T5HO*											
Basic Strategy	New-FL	80	$0.00	$0.00	$0.00	$0.00	.	$0.00	$0.00			
Retrofit Type	New-3-F54T5-HO	38	$9,120.00	$240.00	$4,180.00	$110.00	76	$0.00	$0.00			
Retrofit Type	New-4-F54T5-HO	42	$10,500.00	$250.00	$4,620.00	$110.00	84	$0.00	$0.00			
New Lamp	F54T5-HO - 3500 K	282	$1,410.00	$5.00	$0.00	$0.00	.	$0.00	$0.00			
Old Lamp	400W-MH	42	$0.00	$0.00	$0.00	$0.00	.	$84.00	$2.00			
Old Lamp	250W-MH	38	$0.00	$0.00	$0.00	$0.00	.	$38.00	$1.00			
Ballast Disposal - Non PCB	MH-400W	42	$0.00	$0.00	$0.00	$0.00	.	$84.00	$2.00			
Ballast Disposal - Non PCB	MH-250W	38	$0.00	$0.00	$0.00	$0.00	.	$76.00	$2.00			
PROJECT L-4 SUB-TOTAL			**$21,030.00**		**$8,800.00**			**$282**		**$30,112**	**$17,970**	**$48,082**

Project Material and Labor Cost Summary

Facility: *East Municipal Water District*

Material Type	Type Name	Quantity	Material Cost ($)	Unit Material Price ($/Unit)	Labor Cost ($)	Unit Labor Price ($/Unit)	Total Labor Hours	Disposal Cost ($)	Unit Disposal Price ($/Unit)	Sub-Total Retrofit Cost ($)	Indirect Cost ($)	TOTAL Project Cost ($)
PROJECT L-5	*LED*											
Ballast Disposal - Non PCB	HPS-250W	57	$0.00	$0.00	$0.00	$0.00	.	$114.00	$2.00			
Ballast Disposal - Non PCB	HPS-400W	29	$0.00	$0.00	$0.00	$0.00	.	$58.00	$2.00			
Ballast Disposal - Non PCB	MH-400W	12	$0.00	$0.00	$0.00	$0.00	.	$24.00	$2.00			
Basic Strategy	Retrofit-LED	98	$980.00	$10.00	$612.50	$6.25	24.5	$0.00	$0.00			
New Lamp	100W-LED - 3500 K	57	$44,745.00	$785.00	$3,135.00	$55.00	57	$0.00	$0.00			
New Lamp	147W-LED - 3500 K	41	$40,795.00	$995.00	$2,255.00	$55.00	41	$0.00	$0.00			
Old Lamp	400W-HPS	29	$0.00	$0.00	$0.00	$0.00	.	$58.00	$2.00			
Old Lamp	400W-MH	12	$0.00	$0.00	$0.00	$0.00	.	$24.00	$2.00			
Old Lamp	250W-HPS	57	$0.00	$0.00	$0.00	$0.00	.	$114.00	$2.00			
PROJECT L-5 SUB-TOTAL			$86,520.00		$6,002.50			$392		**$92,915**	**$57,778**	**$150,693**

Notes

[1] Material and labor costs determined from Lighting Audit Software (CELite TM).

[2] Project L-1 through L-5: Unit prices include the following multipliers (i.e., indirect costs): Job Supervision (5%), Contingency (10%), Engineering (8%), Taxes (8.75%), Construction Management (10%), and Profit (15%).

Job Supervision (Material, Labor, & Disposal), Contingency (Material & Labor), Engineering (Material & Labor), Taxes (Material Only), Construction Management (Material & Labor), and Profit (Fixed % Margin on All Costs including indirect costs)

Lumen Method Summary

Project

Title	**Purchasing Warehouse**
Number	
Company	
Designer	

Room

Length [X]	**110**	**ft**
Width [Y]	**40**	**ft**
Height [Z]	**25**	**ft**
RCR	**3.84**	
Ceiling	**50**	**%**
Walls	**30**	**%**
Floor	**10**	**%**
Workplane Height	**2.5**	**ft**

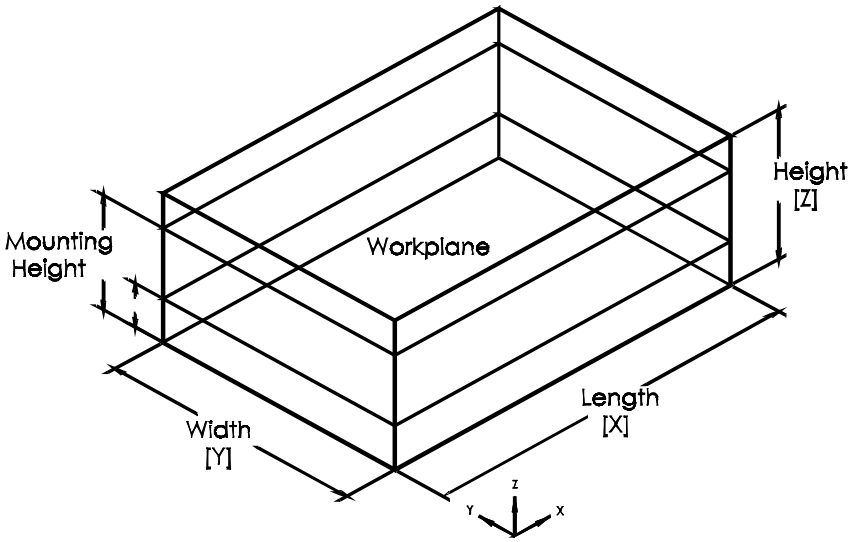

Luminaire

Mounting Height	**25** **ft**
Catalog Number	**THS 400M A16GL (LEG 8, SC= 1.3)**
Manufacturer	**LITHONIA LIGHTING**
IES File Name	**94062906.IES**
Lamp Description	**ONE 400-WATT CLEAR BT-37 BT-37 METAL HALIDE, VERTICAL BASE-UP POSITION.**
Number of Lamps	**1**
Lamp Lumens	**36000**
Light Loss Factor	**0.47**
Coefficient of Utilization	**0.55**

Output

Illuminance	**32**	**fc**
Number of Luminaires	**15**	
Number of Columns [X]	**5**	
Number of Rows [Y]	**3**	
Column Spacing [X]	**22.00**	**ft**
Row Spacing [Y]	**13.33**	**ft**
Column Start [X]	**11.00**	**ft**
Row Start [Y]	**6.67**	**ft**
Power Density	**1.56**	**W/ft²**

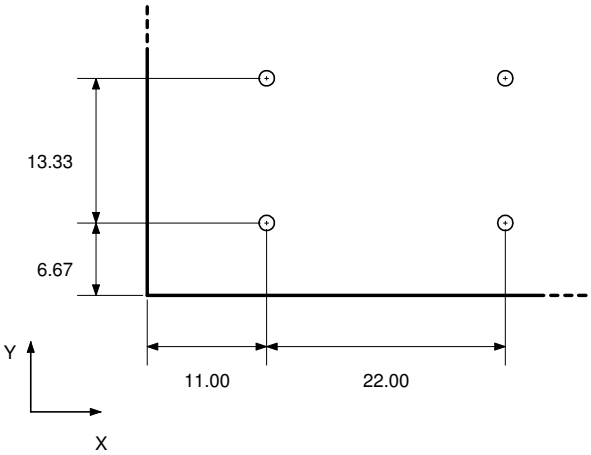

Note: Calculations are based on procedures established by the Illuminating Engineering Society of North America, or standard industry practice.
Visual computes output performance based on input data as provided by, and which is the sole responsibility of, the user.
Acuity Brands Lighting, Inc. cannot be held responsible for the variations in actual situations which can effect calculated output.

STATISTICS

Description	Symbol	Avg	Max	Min	Max/Min	Avg/Min
Workplane	+	34.9 fc	41.8 fc	21.9 fc	1.9:1	1.6:1

LUMINAIRE SCHEDULE

Symbol	Label	Qty	Catalog Number	Description	Lamp	File	Lumens	LLF	Watts
	LM-1	15	THS 400M A16GL (LEG 8, SC= 1.3)	STANDARD ALUMINUM OPTICAL, 400 MH W/ GLASS LENS	ONE 400-WATT CLEAR BT-37 BT-37 METAL HALIDE, VERTICAL BASE-UP POSITION.	94062906.IES	36000	0.47	458

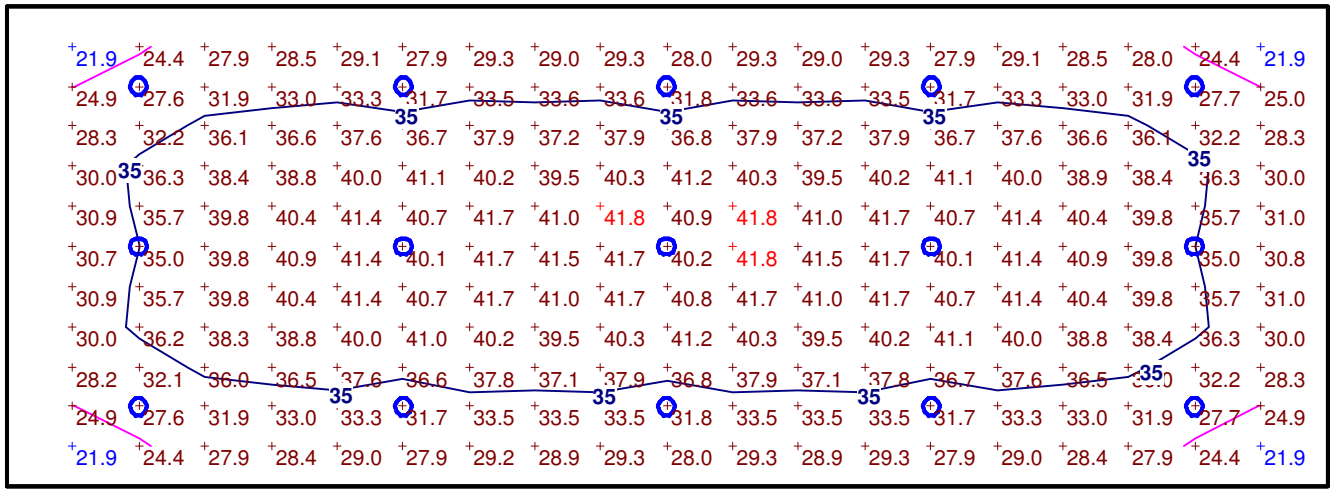

Plan View

Scale 1" = 16'

Purchasing Warehouse

(15) Metal Halide T5HO

Designer

Date
Aug 6 2010

Scale

Drawing No.

1 of 1

Lumen Method Summary

Project

Title	**Purchasing Warehouse**
Number	
Company	
Designer	

Room

Length [X]	**110**	**ft**
Width [Y]	**40**	**ft**
Height [Z]	**25**	**ft**
RCR	**3.84**	
Ceiling	**50**	**%**
Walls	**30**	**%**
Floor	**10**	**%**
Workplane Height	**2.5**	**ft**

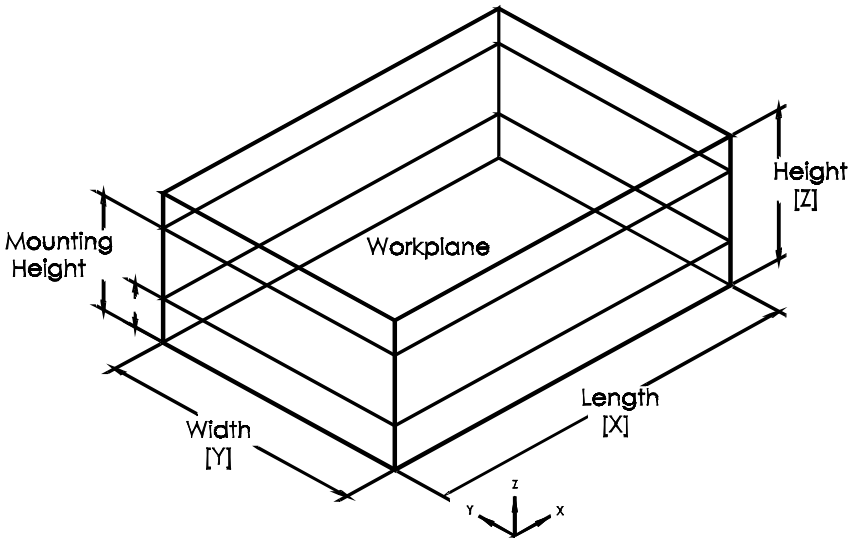

Luminaire

Mounting Height	**25** **ft**
Catalog Number	**EJA 4 54T5HO**
Manufacturer	**LITHONIA LIGHTING**
IES File Name	**Ltl9979.ies**
Lamp Description	**FOUR 54--WATT T5 LINEAR FLUORESCENT, RATED 4450 LUMENS PER LAMP (25 DEG. C AMBIENT).**
Number of Lamps	**4**
Lamp Lumens	**5000**
Light Loss Factor	**0.88**
Coefficient of Utilization	**0.56**

Output

Illuminance	**34**	**fc**
Number of Luminaires	**15**	
Number of Columns [X]	**5**	
Number of Rows [Y]	**3**	
Column Spacing [X]	**22.00**	**ft**
Row Spacing [Y]	**13.33**	**ft**
Column Start [X]	**11.00**	**ft**
Row Start [Y]	**6.67**	**ft**
Power Density	**0.80**	**W/ft²**

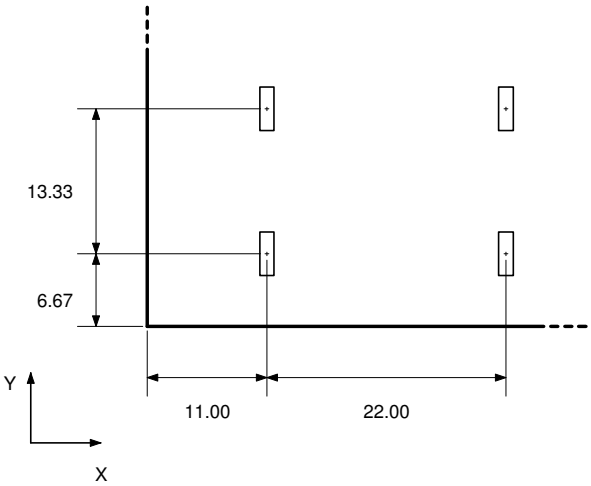

Note: Calculations are based on procedures established by the Illuminating Engineering Society of North America, or standard industry practice.
Visual computes output performance based on input data as provided by, and which is the sole responsibility of, the user.
Acuity Brands Lighting, Inc. cannot be held responsible for the variations in actual situations which can effect calculated output.

STATISTICS

Description	Symbol	Avg	Max	Min	Max/Min	Avg/Min
Workplane	+	35.3 fc	41.8 fc	23.9 fc	1.7:1	1.5:1

LUMINAIRE SCHEDULE

Symbol	Label	Qty	Catalog Number	Description	Lamp	File	Lumens	LLF	Watts
	LM-1	15	EJA 4 54T5HO	GENERAL PURPOSE INDUSTRIAL, NOM. 16" X 48" 4 LAMP 54T5HO, APERTURED TOP WHITE PAINTED REFLECTOR.	FOUR 54--WATT T5 LINEAR FLUORESCENT, RATED 4450 LUMENS PER LAMP (25 DEG. C AMBIENT).	Ltl9979.ies	5000	0.88	234

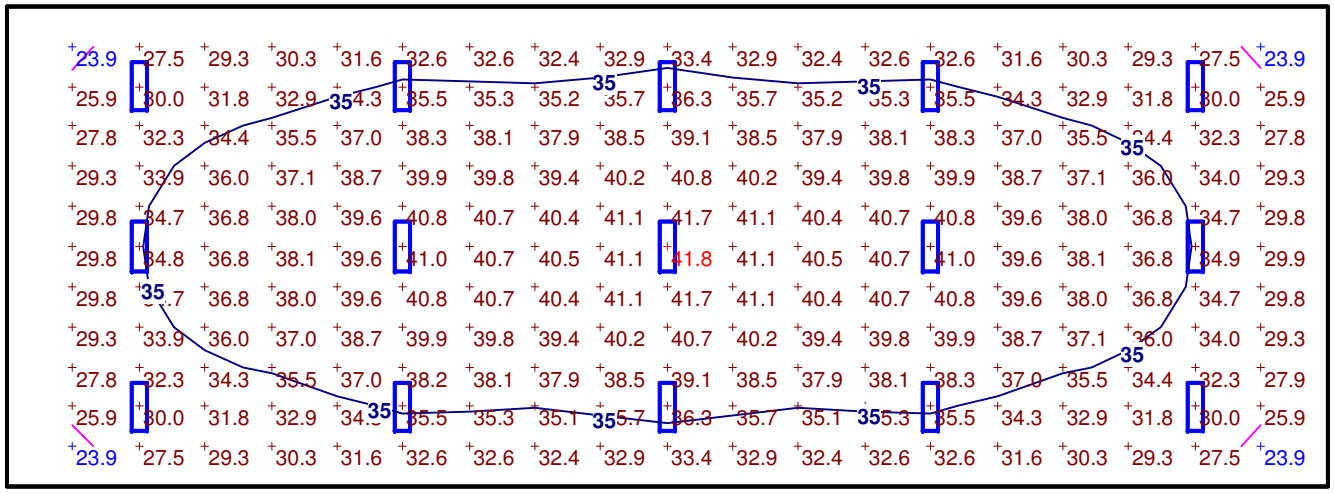

Plan View

Scale 1" = 16'

Purchasing Warehouse

(15) 4-T5HO

Designer

Date
Aug 6 2010

Scale

Drawing No.

Project M-1: Update/Retro-commission existing DDC based Energy Management System (EMS)

Item	Qty.	Material Price [1]	Unit Labor Hours	Average Labor Rate [1]	Material + Labor Cost	Overhead and Profit (15%)	Total Unit Charges	Total Item Cost
EMS Control [1]								
Demolition - Existing Controls	1	$0	24	$32	$768	$115	$883	$883
Central Building Controller	1	$ 7,500	8	$ 55	$ 7,940	$ 1,191	$ 9,131	$ 9,131
DDC Stats w/ mounting plate	190	$ 90	1	$ 55	$ 145	$ 22	$ 167	$ 31,683
Low Voltage Wiring w/ conduit (ft) [2]	3800	$ 0.25	0.01	$ 55	$ 0.80	$ 0.12	$ 0.92	$ 3,496
VAV Box : Dedicated DDC Controller with Enclosure	81	$450	2.0	$55	$560	$84	$644	$52,164
Heat Ventilation Unit & DX Units: Dedicated DDC Controller with Enclosure	9	$1,500	3.0	$55	$1,665	$250	$1,915	$17,233
Air Handling Unit: Dedicated DDC Controller with Enclosure	6	$2,000	5.0	$55	$2,275	$341	$2,616	$15,698
Circulation Pumps/VFD's: Dedicated DDC Controller with Enclosure	4	$450	2.0	$55	$560	$84	$644	$2,576
Absorption Chiller: Dedicated DDC Controller with Enclosure	1	$1,500	8.0	$55	$1,940	$291	$2,231	$2,231
Air Cooled Chiller: Unitary DDC Controller with Enclosure	2	$1,500	8.0	$55	$1,940	$291	$2,231	$4,462
Boiler: Unitary DDC Controller with Enclosure	2	$1,500	6.00	$55	$1,830	$275	$2,105	$4,209
Heat Pumps & Condesning Units: Unitary DDC Controller with Enclosure	17	$650	3.00	$55	$815	$122	$937	$15,933
Training	1	$0	24	$55	$1,320	$198	$1,518	$1,518
Software and Programming [3]	1	$ 1,000	16	$ 55	$ 1,880	$ 282	$ 2,162	$ 2,162
Start-up, Testing and Balancing	1	$ 1,000	8	$ 55	$ 1,440	$ 216	$ 1,656	$ 1,656
Total Construction Cost								**$ 165,034**

[1] Material and labor costs determined from RSMeans Mechanical Cost Data - 2009
[2] Cost estimate assumes an estimated 25-ft of low-voltage wiring; communication wiring; and conduit per unit
[3] Existing software & computer station may be used

Project Cost:

Total Construction Cost		$ 165,034
Commissioning	3%	$4,951
Division-1 Adder (%)	0%	$0
Design Adder (%)	10%	$16,503
Construction Management Adder (%)	10%	$16,503
Contingency (%)	10%	$16,503
Sum of All Adders (Multiplier)	*1.33*	
Total Project Cost ($)		**$ 219,495**

Project M-1: Update/Retro-commission existing DDC based Energy Management System (EMS)

Existing HVAC Energy Use [1]

Fan & Pump kWh	1,637,944
Cooling kWh	1,219,557
Standard Heating kWh	14,032
Space Heating Therms	42,615

Proposed HVAC Energy Use

	Heating	*Cooling*	*Fans*
Savings from Improved Temperature Control	5%	5%	5%
Savings from Optimized Start/Stop	3%	3%	3%
Overall Savings from EMS Control	***8%***	***8%***	***8%***

Fan Savings	131,035	kWh
A/C Savings	97,565	kWh
Electric Heating Savings	1,123	kWh
Gas Heating Savings	3,409	Therms

Project Summary

Electricity Savings (kWh)	229,723
Electricity Rate ($/kWh) [2]	$ 0.086
Energy Savings ($)	$ 19,831
Natural Gas Savings (Therms)	3,409
Natural Gas Rate ($/Therm) [3]	$ 0.689
Energy Savings ($)	$ 2,350
Total Energy Savings ($)	$ 22,181
Project Costs ($)	$ 219,495
Simple Payback Period (Years)	9.9
Estimated Incentive Rate ($/Therm) [4]	$1.00
Estimated Incentive Rate ($/kWh) [4]	$0.09
Total Estimated Incentive ($)	$24,084
Project Cost with Incentive ($)	$195,411
Simple Payback with Incentive (years)	8.8

Notes:

[1] From Energy Balance - Appendix B
[2] Electricity Rates are based on simulated energy rates (See Appendix F)
[3] Gas Rates are based on historical energy rates (See Appendix A)
[4] Representative of SCE customized incentive program; See Section 6 for details

Project M-2: Implement HVAC Control Optimization Stratergy (AC and OMC offices)

(a) Chiller Temperature Reset

(b) Boiler Temperature Reset

(c) Cold/Hot Deck Reset

Item	Unit	Qnty.	Material Price [1] ($)	Labor Cost [1] ($)	Total Item Cost ($)
Controller Chip	Ea.	2	$ 8,000		$ 16,000
Programming	Ea.	1		$ 5,000	$ 5,000
Zone Humidity Sensor	Ea.	190	$ 250	$ 110	$ 68,400
Total Project Cost:					**$ 89,400**

[1] Material and labor costs determined from RSMeans Mechanical Cost Data - 2009

Project M-2: Implement HVAC Control Optimization Stratergy
(AC and OMC offices)

(a) Chiller Temperature Reset
(b) Boiler Temperature Reset
(c) Cold/Hot Deck Reset

Baseline Use [1]

Space Cooling (Total kWh)	918,749
Space Heating (Total Boiler Therms)	30,356

Proposed Case

SIMULATED SAVINGS (HVAC Control Optimization Strategy)

(a) Chiller Temperature Reset

% of Time Chiller can be Reset to Higher CHWS Temp.	30%
Space Cooling (% kWh Savings)	6%

(b) Boiler Temperature Reset

% of Time Boiler can be Reset to Lower Temp.	30%
Space Boiling (% Therm Savings)	6%

(c) Cold/Hot Deck Reset

% of Time Deck can be Reset	25%
Space Heating (% Natural Gas Savings)	3%
Space Cooling (% kWh Savings)	5%

Project Summary

Total boiler Therms Saved	774
Total chiller kWh Saved	28,022
Electricity Rate ($/kWh) [2]	$0.095
Natural Gas Rate heating ($/Therm) [3]	$0.689
Total Natural Gas Savings ($)	$534
Total Electricity Savings ($)	$2,650
Total Savings ($)	$3,184
Total Project Cost without Incentive ($)	$89,400
Simple Payback Period w/out Incentive (years)	28.1
Estimated Incentive ($)[4]	$3,296
Project Cost with Incentive ($)	$86,104
Simple Payback Period with Incentive (years)	27.0

Notes

[1] Baseline usage after the implementation of project M-1 EMS updation
[2] Simulated electricity rate excludes demand. See Appendix F for details
[3] Historical Natural Gas Rate. See Appendix A for details
[4] Incentives from SCE and Socal Gas at $0.09/kwh (controls) saved and $1.00/therm saved, respectively

Project M-3: Replace existing screw compressors serving the air-cooled chiller with a new Turbocor 140-ton magnetic-bearing compressor

Total System Ton = 140

Item	Unit	Qty.	Material Price	Unit Labor Hours	Average Labor Rate	Material + Labor Cost	Overhead and Profit (15%)	Total Unit Charges	Total Item Cost
Compressor Retrofit									
Compressor Removal and Disposal	Ea.	1	$ -	16	$ 55	$ 880	$ 132	$ 1,012	$ 1,012
70-Ton Turbocor magnetic-bearing compressor	Ea.	2	$ 21,000	40	$ 55	$ 23,200	$ 3,480	$ 26,680	$ 53,360
Start-up, Testing, and Balancing	Ea.	1	$ -	32	$ 55	$ 1,760	$ 264	$ 2,024	$ 2,024
Total Construction Cost									**$ 56,396**

[1] Material and labor costs determined from RSMeans Mechanical Cost Data - 2009

[2] Cost estimation assumes existing components such as conductors, disconnects, piping, etc., can be used

Project Cost:

Total Construction Cost		$ 56,396
Commissioning	3%	$1,692
Division-1 Adder (%)	0%	$0
Design Adder (%)	10%	$5,640
Construction Management Adder (%)	10%	$5,640
Contingency (%)	10%	$5,640
Sum of All Adders (Multiplier)	1.33	
Total Project Cost ($)		**$ 75,007**

$536 per Ton

Project M-3: Replace existing screw compressors serving the air-cooled chiller with a new Turbocor 130-ton magnetic-bearing compressor

Baseline HVAC Energy Use [1]

Central Chiller Energy		
Chiller Tons		
Chiller 2 - Air-cooled Rotary Screw		130
TOTAL Chiller Tons		130
Ave. Load Factor		
Chiller 2		35.7%
kW/Ton - Average		1.20
Equipment Operating Hours [1]		8,322
Annual kWh		463,286

Proposed HVAC Energy Use

Central Chiller Energy		
Chiller Tons		
Chiller 2 - Air-cooled Rotary Screw		140
TOTAL Chiller Tons		140
Ave. Load Factor		35.7%
kW/Ton - Average		0.70
Equipment Operating Hours [1]		8,322
Annual kWh		291,038

Summary of Savings

Total Kw Saved		65
Total kWh Saved		172,247
% HVAC Savings		37.2%
Electricity Rate ($/kWh)	$	0.095
Electricity Savings ($)	$	16,290

Project M-3: Replace existing screw compressors serving the air-cooled chiller with a new Turbocor 130-ton magnetic-bearing compressor

Total Savings ($)	$	16,290
Project Cost without Incentive ($)	$	75,007
Simple Payback Period without Incentive (yrs)		4.6
Estimated Incentives ($)		32,337
Project Cost with Incentive ($)	$	42,670
Simple Payback Period without Incentive (yrs)		2.6

Notes

[1] Post implementation of project M-1 & M-2

[2] Simulated electricity rate excludes demand. See Appendix F for details

[3] Historical Natural Gas Rate. See Appendix A for details

[4] Incentives from SCE and Socal Gas at $0.15/kwh saved and $1.00/therm saved respectively

Project M-4: Provide garage door sensor controls to shut-off heater operation when the garage doors are open

Number of Zones Retrofitted: 2

Item	Quantity	Material Price [2]	Unit Labor Hours	Average Labor Rate	Material + Labor Cost	Overhead and Profit (15%)	Total Unit Charges	Total Item Cost
Per Zone Installation Costs								
Interlock Switch (with time delay)	1	$ 150	2	$ 55	$ 260	$ 39	$ 299	$ 299
Wiring [1]	40	$ 0.10	0.01	$ 55	$ 1	$ 0	$ 1	$ 30
Conduit	25	$ 2.00	0.02	$ 55	$ 3	$ 0	$ 4	$ 89
Start Up and Testing	1	$ -	2	$ 55	$ 110	$ 17	$ 127	$ 127
Total Construction Cost								**$ 545**

[1] Estimated average run from garage door to HVAC unit.
[2] Material and labor costs determined from RSMeans Mechanical Cost Data - 2009

Project Cost:

	Per Zone	Total Cost
Total Construction Cost	$ 545	$ 1,089
Division-1 Adder (%)	0%	0%
Design Adder (%)	0%	0%
Construction Management Adder (%)	0%	0%
Contingency (%)	10%	10%
Sum of All Adders (Multiplier)	1.10	1.10
Total Project Cost ($)	**$ 599**	**$ 1,198**

Project M-4: Provide garage door sensor controls at the OMC shops (Auto-Shop & Mechanical Shop)

Existing Energy Use *(from Energy Balance - Appendix B; Post implementation of Project - M1)*

			Fan/Pump Energy Use					*Gas Heat Energy Use*				
Unit ID	**Area Served**	**# of Units**	**Motor HP**	**Motor Eff.**	**Ave. Load Factor**	**Annual Use Hours**	**kWh/ Year** [1]	**Max Input (MBH)**	**AFUE / Eff.**	**Ave. Load Factor**	**Annual Use Hours**	**Therms/ Year** [1]
Radiant Heaters (Gas Fired)												
RH-1	Workshop	1						576	70%	41%	1069	2,549
RH-2	Workshop	1						1078	70%	41%	1069	4,771
TOTAL							0					7,320

Proposed Energy Use

			Fan/Pump Energy Use					*Gas Heat Energy Use*				
Unit ID	**Area Served**	**# of Units**	**Motor HP**	**Motor Eff.**	**Ave. Load Factor**	**Annual Use Hours**	**kWh/ Year** [1]	**Max Input (MBH)**	**AFUE / Eff.**	**Ave. Load Factor**	**Annual Use Hours**	**Therms/ Year** [1]
Radiant Heaters (Gas Fired)												
RH-1	Workshop	1						576	70%	33%	1069	1,591
RH-2	Workshop	1						1078	70%	33%	1069	2,977
TOTAL							0					4,568

Project Summary

Total Natural Gas Therms Saved		2,752
Natural Gas Rate ($/Therms) [2]	$	0.689
Total Gas Savings ($)	$	1,897
` Project Cost ($)	$	1,198
Simple Payback (years)		0.6
Estimated Incentive Rate ($/Therm) [3]		$1
Estimated Incentive ($)		$1,198
Project Cost with Incentive ($)	$	-
Simple Payback Period without Incentive (yrs)		0.0

Notes

[1] Values are post-implementation of M-1 EMS upgrade
[2] Gas Rates are based on historical energy rates (See Appendix A)
[3] Representative of SCE customized incentive program; See Section 6 for details

Project M-5: Replace existing old boiler serving Administration Building with a new

Item	Unit	Quantity	Material Price [1]	Unit Labor Hours	Average Labor Rate [1]	Material + Labor Cost	Overhead and Profit (15%)	Total Unit Charges	Total Item Cost ($)
NEW BOILER									
Demolition / Disposal	Ea.	1	$ -	12	$ 55	$ 660	$ 99	$ 759	$ 759
High-Efficiency Gas-Fired Boiler; 1670 MBH (Input) [2]	Ea.	1	$ 22,800	106	$ 55	$ 28,630	$ 4,295	$ 32,925	$ 32,925
Testing and Balancing	Ea.	1	$ -	12	$ 55	$ 660	$ 99	$ 759	$ 759
Total Construction									**$ 34,443**

[1] Installation costs are based on RSMeans Mechanical Cost Data - 2009. Costs are interpolated from given boiler sizes.
[2] Costs account for new boiler and all related boiler room components such as piping, elbows, tees, valves, circulation pump, expansion tanks, vent chimneys, and insulation.

Project Cost:

Total Construction Cost		$ 34,443
System Commissioning	3%	$ 1,033
Engineering Design Adder (%)	10%	$ 3,444
Construction Management Adder (%)	10%	$ 3,444
Contingency (%)	10%	$ 3,444
Sum of All Adders (Multiplier)	1.33	
Total Project Cost ($)		**$ 45,809**

Project M-5: Replace existing old boiler serving Administration Building with a new high efficiency, low Nox boiler

A. Existing Boiler		
Boiler Input Capacity (Max)	1,670,000	Btu/h
Boiler Output Capacity (Max)	1,169,000	Btu/h
Overall Combustion Efficiency	70.0%	
Annual Usage Factor	95.0%	
Annual Use Hours	8,322	
Ave. Load Factor	11.8%	
Annual MMBTU Output	1,147	
Total Natural Gas Energy Use [2]	16,383	**Therms/Year**

B. Proposed High-Efficiency Boiler		
Boiler Input Capacity (Max)	1,670,000	Btu/h
NOx Rating	< 20 ppm	
Proposed Boiler Efficiency	85.0%	
Boiler Output Capacity (Max)	1,419,500	Btu/h
Annual MMBTU Output	1,147	
Ave. Load Factor	11.8%	
Annual Usage Factor	78.2%	(% of 8760 hours)
Annual Use Hours	6,853	
Total Natural Gas Energy Usage [2]	10,524	**Therms/Year**

Equivalent Annual MMBTU Output

C. Project Summary		
Total Savings (Therms)		5,859
% Savings from Baseline		35.8%
Effective Natural Gas Rate ($ / Therm) [1]	**$**	**0.689**
Total Annual Savings ($)	$	4,039
Estimated Project Cost without Incentive ($)	$	45,809
Simple Payback without Incentive (years)		11.3
Estimated Incentive Rate ($/Therm)	$	1.00
Estimated Incentive ($)	$	5,859
Poject Cost with Incentive ($)	$	39,949
Simple Payback with Incentive (years)		9.9

Notes
[1] Values are post-implementation of M-1 EMS upgrade
[2] Gas rates are based on the historical gas rate, Appendix - A

Project M-6

Retrofit Standard-efficiency hot water circulation central plant pumps with premium efficiency motors; install Variable Frequency Drives (VFDs) on the hot water circulation pumps

Item	Units	Qty.	Material Price *[1]*	Unit Labor Hours	Average Labor Rate *[2]*	Material + Labor Cost	Overhead and Profit (15%)	Total Unit Charges	Total Item Cost
Demolition & Disposal	Ea.	2	$ -	4	$ 32	$ 128	$ 19	$ 147	$ 294
New 3-hp Premium Efficiency Motor	Ea.	2	$ 1,194	4	$ 55	$ 1,414	$ 212	$ 1,626	$ 3,252
New Variable Frequency Drive (VFD)	Ea.	2	$ 1,024	18	$ 55	$ 2,014	$ 302	$ 2,316	$ 4,632
Temp. Sensor (Transducer) w/ wiring	Ea.	2	$ 100	4	$ 55	$ 320	$ 48	$ 368	$ 736
Differential Pressure Transducer w/ wiring	Ea.	2	$ 400	6	$ 56	$ 736	$ 110	$ 846	$ 1,693
Start-up and Commissioning	Ea.	2	$ -	3	$ 55	$ 165	$ 25	$ 190	$ 380
Total Construction									**$ 10,987**

[1] Material cost for motors determined from *www.Baldor.com.*

[2] Other material and labor costs determined from RSMeans Mechanical Cost Data - 2009

Project Cost:

Total Construction Cost		$ 10,987
Division-1 Adder (%)	2%	220
Design Adder (%)	15%	1,648
Construction Management Adder (%)	10%	1,099
Contingency (%)	15%	1,648
Sum of All Adders (Multiplier)	1.42	
Total Project Cost ($)		**$ 15,602**

$2,600 per HP

Project M-6 Retrofit Standard-efficiency hot water circulation central plant pumps with premium efficiency motors; install Variable Frequency Drives (VFDs) on the hot water circulation pumps

Nameplate Data

Equipment:	Ciculation Pumps
Qty.	2
Make	Baldor
Per Pump H.P.	3

Baseline Use

	Existing	*Proposed*
Pump H.P. [1]	6	6
Motor Efficiency	**82.5%**	**92.4%**
Ave. Motor Load Factor (%)	55%	55%
Pump kW	3.0	*(see below)*
Total Equipment Operating Hours	8,322	8,322
Hot Water Circulation Pump kWh	24,923	*(see below)*

Proposed Use:

Motor Characteristics with VFD						Duty Cycle Estimate		
Motor Speed	Volume or Flow	Ideal Motor H.P. (% of rated)	Actual Motor H.P. (% of rated)	Motor H.P.	Motor kW	% of Total Operating Hours	Hour per Year	kWh
30%	30%	2.7%	50.7%	3.0	1.4	20%	1,664	2,258
40%	40%	6.4%	51.8%	3.1	1.4	20%	1,664	2,306
50%	50%	12.5%	54.3%	3.3	1.5	10%	832	1,208
60%	60%	21.6%	58.6%	3.5	1.6	10%	832	1,304
70%	70%	34.3%	65.0%	3.9	1.7	10%	832	1,447
80%	80%	51.2%	74.1%	4.4	2.0	10%	832	1,648
90%	90%	72.9%	86.0%	5.2	2.3	10%	832	1,914
100%	100%	100.0%	100.0%	6.0	2.7	10%	832	2,225
						100%	8,322	14,310

Project Summary

Total kW Saved	-
Total kWh Saved	10,613
% Savings from Baseline	42.6%
Electricity Rate ($/kWh) [2]	$0.084
Total Electricity Savings ($)	$893
Project Cost ($)	$15,602
Simple Payback Period w/out Incentive (years)	17.5

Project M-6 Retrofit Standard-efficiency hot water circulation central plant pumps with premium efficiency motors; install Variable Frequency Drives (VFDs) on the hot water circulation pumps

Incentive Rate ($/kWh)	$0.09
Estimated Incentive ($)	$955
Project Cost with Incentive ($)	$14,647
Simple Payback Period with Incentive (years)	16.4

Notes

[1] Representative of two circulation pumps, each with 3-hp motors

[2] Rate excludes demand savings. See Appendix-F for details of rate analysis

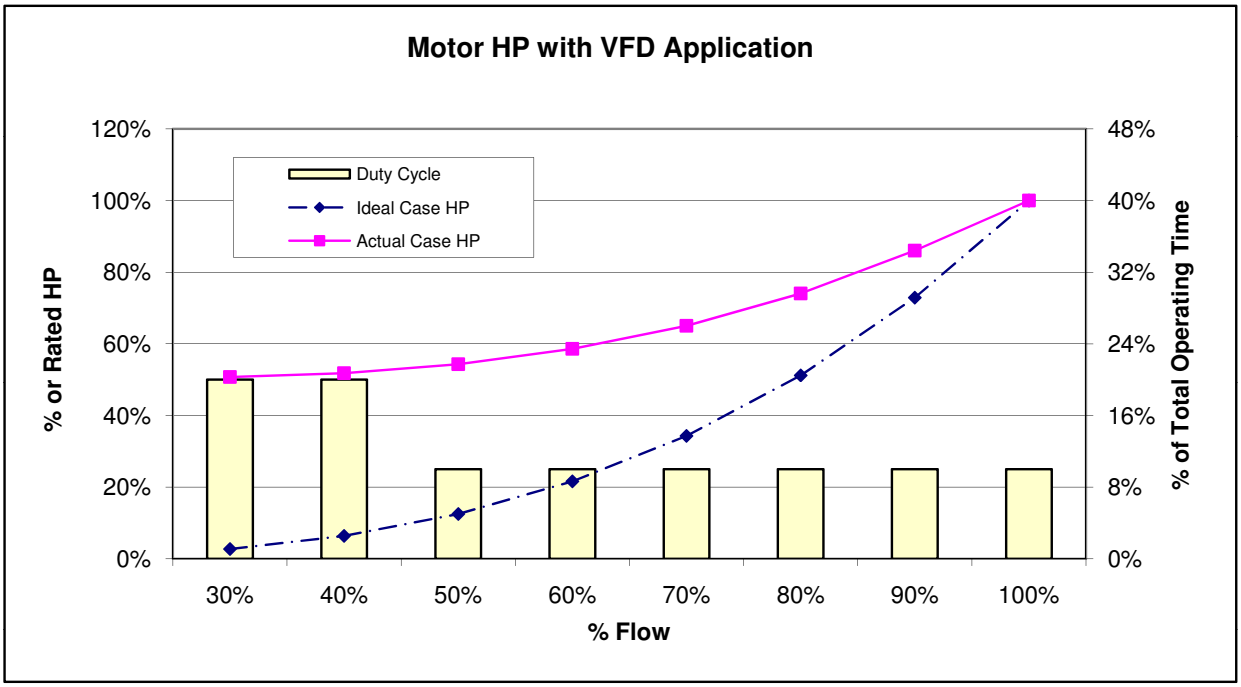

Project E-1: Provide occupancy sensor controllers for vending machines

Snack Miser Cost

SnackMiser Master Unit	$79.00
SnackMiser Slave Unit	$71.00
AVERAGE COST	$75.00
Adder (shipping, tax, etc.)	15%
Adder (shipping, tax, etc.)	$11.25
TOTAL Material Price	$86.25
Install Time (Hrs)	1.5
Rate ($/hr)	$55.00
Install Cost	$82.50
TOTAL INSTALLED COST	$168.75

Vending Miser Cost

VendingMiser Master Unit	$179.00
VendingMiser Slave Unit	$171.00
VendingMiser Outdoor Unit	$189.00
AVERAGE COST	$179.67
Adder (shipping, tax, etc.)	15%
Adder (shipping, tax, etc.)	$26.95
TOTAL Material Price	$206.62
Install Time (Hrs)	1.5
Rate ($/hr)	$55.00
Install Cost	$82.50
TOTAL INSTALLED COST	$289.12

Notes

[1] Unit material most from http://www.vendingmiserstore.com

Project E-1: Provide occupancy sensor controllers for vending machines at EMWD

PROPOSED CONTROLLED MACHINES

		Status of Lights
Number of Vending Machines (Cold Drinks)	1	*Lights On*
Number of Snack Machines	1	*Lights On*

VENDING MACHINE POWER - *per unit*

	COLD DRINK	SNACK
Vending Machine Watts - Compressor	325	0
Vending Machine Watts - Lamps / Other	75	75
Vending Machine Watts - TOTAL	400	75

BASELINE CASE - *per unit*

	COLD DRINK	SNACK
Hours of Operation	8,760	8,760
% of Time Compressor is 'On' *(% of 8760 hours)*	65%	65%
Compressor Hours of Operation	5,694	5,694
Compressor Annual kWh	1851	0
% of Time Lights are 'On' *(% of 8760 hours)*	100%	100%
Lighting Hours of Operation	8,760	8,760
Lighting Annual kWh	657	657
Total Vending Machine kWh	**2,508**	**657**
Effective Electricity Rate ($/kWh)	**$0.084**	**$0.084**
Annual Energy Cost ($)	**$211**	**$55**

PROPOSED CONDITIONS - *per unit*

	COLD DRINK	SNACK
Hours of Operation	8,760	8,760
kWh during Occupancy Periods		
Estimated Occupancy Hours per Year *	4,160	4,160
** Estimated as 16 hrs / day x 5 days / wk x 52 wks/yr*		
% of Time Compressor is 'On'	65%	65%
Compressor Hours of Operation	2,704	2704
Compressor Annual kWh	879	0
% of Time Lights are 'On'	100%	100%
Lighting Hours of Operation	4,160	4,160
Lighting Annual kWh	312	312

Project E-1: Provide occupancy sensor controllers for vending machines at EMWD

Total Occupancy Period kWh	1191	312

kWh during Non-Occupancy Periods

	COLD DRINK	SNACK
Unoccupied Nighttime and Weekend Hours per Year	4,600	4,600
# of Automatic Re-power Cycles *	2,300	2,300
** Automatic re-power every 2-hours*		
Average Power-Up Time per Cycle (hours)	0.25	0.25
Compressor Hours of Operation	575	575
Compressor Annual kWh	187	0
Lighting Hours of Operation	0	0
Lighting Annual kWh (i.e., lights turn off with no occupancy)	0	0
Total Non-Occupancy Period kWh	187	0
Total Vending Machine kWh	**1378**	**312**
Energy Rate ($/kWh)	**$0.084**	**$0.084**
Annual Energy Cost ($)	**$116**	**$26**

SUMMARY - *per unit*

	COLD DRINK	SNACK
kWh Savings	1130	345
Energy Rate ($/kWh) *	$0.084	$0.084
** Rate used is the energy rate; Measure does not include demand savings*		
Energy Cost Savings ($)	$95	$29

SUMMARY - *TOTAL*

	COLD DRINK	SNACK
Controls Cost - *per unit*	$289	$169
Total Project Cost	$289	$169
Total kWh Savings	1,130	345
Total Energy Cost Savings ($)	$95	$29

PROJECT SUMMARY - *TOTAL*

Total project cost w/o incentive ($)	$458
Total energy savings (kWh)	1,475
Total energy cost savings ($)	$124
Simple payback period w/o incentive (years)	3.7
Estimated incentive ($)	$132.7
Total project cost with incentive ($)	$325
Simple payback period with incentive (years)	2.6

Appendix D

Local Weather Data

PERRIS, CALIFORNIA

Period of Record General Climate Summary - Cooling Degree Days

Station:(046816) PERRIS													
From Year=1961 To Year=1973													
Cooling Degree Days for Selected Base Temperature (F)													
Base	Jan.	Feb.	Mar.	Apr.	May	Jun.	Jul.	Aug.	Sep.	Oct.	Nov.	Dec.	Annual
55	22	35	53	134	270	406	684	707	511	309	87	16	3232
57	13	20	32	97	216	347	622	645	451	251	55	8	2756
60	5	8	12	52	143	263	529	552	361	171	24	1	2120
65	1	1	1	12	53	139	374	397	219	72	2	0	1271
70	0	0	0	1	14	56	220	246	104	20	0	0	661

Cooling Degree Day units are computed as the difference between the daily average temperature and the base temperature. (Daily Ave. Temp. - Base Temp.) One unit is accumulated for each degree Fahrenheit the average temperature is above the base temperature. Negative numbers are discarded. Example: If the days high temperature was 95 and the low temperature was 51, the base 60 heating degree day units is ((95 + 51) / 2) - 60 = 13. This is done for each day of the month and summed.
Table updated on Apr 15, 2010
Months with 5 or more missing days are not considered
Years with 1 or more missing months are not considered

Western Regional Climate Center, wrcc@dri.edu

PERRIS, CALIFORNIA

Period of Record General Climate Summary - Heating Degree Days

Station:(046816) PERRIS													
From Year=1961 To Year=1973													
Heating Degree Days for Selected Base Temperature (F)													
Base	Jan.	Feb.	Mar.	Apr.	May	Jun.	Jul.	Aug.	Sep.	Oct.	Nov.	Dec.	Annual
65	466	346	355	225	99	34	0	0	8	79	265	474	2350
60	315	211	211	114	33	8	0	0	0	23	136	321	1373
57	230	139	137	70	13	2	0	0	0	11	78	234	913
55	177	97	96	46	6	1	0	0	0	7	49	180	659
50	72	28	26	11	1	0	0	0	0	2	11	78	228

Heating Degree Day units are computed as the difference between the base temperature and the daily average temperature. (Base Temp. - Daily Ave. Temp.) One unit is accumulated for each degree Fahrenheit the average temperature is below the base temperature. Negative numbers are discarded. Example: If the days high temperature was 65 and the low temperature was 31, the base 50 heating degree day units is 50 - ((65 + 31) / 2) = 2. This is done for each day of the month and summed.
Table updated on Apr 15, 2010
Months with 5 or more missing days are not considered
Years with 1 or more missing months are not considered

Western Regional Climate Center, wrcc@dri.edu

PERRIS, CALIFORNIA

Period of Record General Climate Summary - Temperature

	Monthly Averages			Daily Extremes				Monthly Extremes				Max. Temp.		Min. Temp.	
	Max	Min	Mea	Hig	Date	Lo	Date	Highes	Yea	Lowes	Yea	>=	<=	<=	<=
	F	F	F	F	dd/yyyy or yyyymmdd	F	dd/yyyy or yyyymmdd	F	-	F	-	# Days	# Days	# Days	# Days
January	65.3	34.7	50.0	87	18/1971	17	14/1963	52.5	196	48.0	196	0.0	0.0	12.2	0.0
February	68.1	37.5	52.8	99	03/1963	23	12/1965	59.6	196	48.5	196	0.1	0.0	6.8	0.0
March	68.3	38.9	53.6	95	31/1966	23	05/1963	56.8	196	50.1	196	0.4	0.0	4.5	0.0
April	74.2	41.6	57.9	98	13/1962	25	20/1968	63.8	196	49.7	196	1.5	0.0	1.5	0.0
May	79.6	47.5	63.5	106	21/1967	34	17/1962	65.7	197	59.9	197	5.4	0.0	0.0	0.0
June	85.3	51.7	68.5	107	14/1966	37	02/1967	71.8	197	64.9	196	11.4	0.0	0.0	0.0
July	96.7	57.4	77.1	110	28/1972	41	03/1968	79.4	197	74.6	196	28.6	0.0	0.0	0.0
August	96.9	58.7	77.8	110	30/1967	41	03/1962	81.8	196	74.2	196	27.5	0.0	0.0	0.0
Septembe	90.8	53.2	72.0	114	13/1971	38	29/1971	74.7	196	68.3	196	17.0	0.0	0.0	0.0
October	82.5	47.1	64.8	101	03/1964	26	30/1971	69.7	196	61.2	197	8.4	0.0	0.6	0.0
Novembe	72.0	40.5	56.2	94	02/1966	24	15/1964	60.0	196	52.3	196	0.5	0.0	2.9	0.0
December	64.5	34.9	49.7	84	09/1962	12	21/1968	53.9	196	46.4	197	0.0	0.0	12.1	0.0
Annual	78.7	45.3	62.0	114	19710913	12	19681221	62.7	196	61.2	197	100.	0.0	40.7	0.0
Winter	66.0	35.7	50.8	99	19630203	12	19681221	53.9	196	49.0	196	0.1	0.0	31.1	0.0
Spring	74.0	42.7	58.4	106	19670521	23	19630305	61.2	196	56.2	196	7.3	0.0	6.1	0.0
Summer	92.9	56.0	74.5	110	19670830	37	19670602	76.0	197	72.0	196	67.5	0.0	0.0	0.0
Fall	81.7	46.9	64.3	114	19710913	24	19641115	66.8	196	62.1	197	25.9	0.0	3.5	0.0

Table updated on Apr 15, 2010
For monthly and annual means, thresholds, and sums:
Months with 5 or more missing days are not considered
Years with 1 or more missing months are not considered
Seasons are climatological not calendar seasons
Winter = Dec., Jan., and Feb. Spring = Mar., Apr., and May
Summer = Jun., Jul., and Aug. Fall = Sep., Oct., and Nov.

Western Regional Climate Center, wrcc@dri.edu

Appendix E

Manufacturers Product Literature

Disclaimer:

References to specific brand names, products or manufacturers are provided for illustrative purposes only and shall not be considered endorsements by the Energy Commission, the State of California, its employees, contractors, and subcontractors.

Fluorescent Lamps and Ballasts

Universal™ Lighting Technologies

Triad® ULTim8™ Ballasts:

THE ULTIMATE IN ENERGY SAVINGS

ULTim8™

A Triad® Brand

UPGRADING TO ULTim8™ PAYS FOR ITSELF!

Universal Lighting's new ULTim8™ high efficiency ballast family is the biggest energy-saving breakthrough in linear fluorescent lighting in a quarter century. Our dedicated voltage ULTim8 ballasts (120- and 277-volt models) can cut your customers' energy bills by 40% compared to T12 energy-saving systems—and up to 6% versus standard electronic T8 ballasts.

Maximize energy savings with a lighting retrofit

ULTim8™ low power ballasts are great for a variety of retrofit jobs, with benefits that include:

- .77 ballast factor
- Designed for maximum efficiency
- Parallel lamp operation
- THD < 10%
- Same wiring and mounting footprint as conventional ballasts for installation ease
- Auto-restrike as a standard feature
- Anti-striation control

Saving thousands of dollars...one watt at a time

The cost of electricity accounts for 87 cents out of every lighting dollar. ULTim8 ballasts drive those costs down because they consume up to 6 fewer input watts than standard electronic ballasts. That wattage savings *alone* pays for the ballast over its minimum life expectancy. When combined with new energy-saving lamps, ULTim8 can reduce energy consumption by 60 watts or more when retrofitting a 4-lamp T12 fixture. With ULTim8, you can document exceptional energy savings on all your retrofit jobs!

LOW POWER LIGHT LEVEL SYSTEMS "EL" Family (.77 Ballast Factor)

Ballast Type	Lamp Type	Model Number*	120 volt Input Watts			277 volt Input Watts		
			2 Lamp	3 Lamp	4 Lamp	2 Lamp	3 Lamp	4 Lamp
Magnetic–Energy Saving	F40T12/ES (34 Watt)	2 x 34 Watt	74	118	148	74	118	148
Electronic–Standard	F32T8	Bx32IyyyL-A	51	76	100	51	76	98
ULTim8™ "EL"	F32T8	Bx32IyyyEL	47	70	95	47	70	93
THE ULTim8™ HIGH EFFICIENCY BALLAST INCREMENTAL SAVINGS			4	6	5	4	6	5
HIGH EFFICIENCY RETROFIT ENERGY SAVINGS			27	48	53	27	48	55
Additional Options with the F32T8/ES (30 Watt Lamp)								
ULTim8™ "EL"	F32T8/ES (30 Watt)	Bx32IyyyEL	44	66	89	44	65	87
30W HIGH EFFICIENCY LAMP & ULTim8™ BALLAST INCREMENTAL SAVINGS			7	10	12	7	11	11
Additional Options with the new F28T8 Lamp								
ULTim8™ "EL"	F28T8	Bx32IyyyEL	41	62	83	41	61	81
28W HIGH EFFICIENCY LAMP & ULTim8™ BALLAST INCREMENTAL SAVINGS			10	14	17	10	15	17

NOTE: The .77 Ballast Factor, "EL" family provides slightly higher lumen levels than a magnetic ballast operating the energy saving 34 watt T12 lamp.

**For model numbers: X = 2, 3, or 4 for the quantity of lamps yyy = 120 or 277 for the input voltage*

4-Lamp System Lumen Comparison with "EL" Family

Lamp Type	Rated Lamp Lumens		Ballast Factor	Watts	Mean System Lumens	Relative Mean System Lumens	Energy Savings (Watts)
	Initial	Mean					
ENERGY SAVING ELECTROMAGNETIC BALLAST							
F40T12/ES/CW (34W)	2650	2280	0.89	148	8,117	100%	0
B432I277EL ULTIM8 BALLAST							
F32T8 700 series	2850	2710	0.77	93	8,347	103%	55
F32T8 High Lumen	3100	2945	0.77	93	9,071	112%	55
F32T8/ES (30W)	2850	2679	0.77	87	8,251	102%	61
F28T8 (28W)	2725	2562	0.77	81	7,889	97%	67

The Right Choice For New Construction

Our ULTim8 full light output systems offer the high ballast factor that's ideal for new construction jobs.

- .87 ballast factor
- Designed for maximum efficiency
- Parallel lamp operation
- THD < 10%
- Same wiring and mounting footprint as conventional ballasts for installation ease
- Auto-restrike as a standard feature
- Anti-striation control

WHAT DOES ONE WATT COST YOU?

Yearly Hours Of Operation	Utility Rate (Costs per Kwh)					
	0.06	0.08	0.10	0.12	0.16	0.20
3,000	$0.18	$0.24	$0.30	$0.36	$0.48	$0.60
3,500	$0.21	$0.28	$0.35	$0.42	$0.56	$0.70
4,000	$0.24	$0.32	$0.40	$0.48	$0.64	$0.80
4,500	$0.27	$0.36	$0.45	$0.54	$0.72	$0.90
5,000	$0.30	$0.40	$0.50	$0.60	$0.80	$1.00
6,000	$0.36	$0.48	$0.60	$0.72	$0.96	$1.20
7,000	$0.42	$0.56	$0.70	$0.84	$1.12	$1.40
8,760	$0.53	$0.70	$0.88	$1.05	$1.40	$1.75

To determine what one watt costs you annually, find your local Kwh rate on a recent utility bill and multiply by your annual operating hours.

6 Watts Saved per Ballast*	Additional Energy Savings With ULTim8™ Ballast —versus— Standard Electronic Ballast With F32T8 Lamps			
KWH Rate	Operating Hours / Year			60,000 Hour $avings**
	3500	5000	8760	
$0.06	$1.26	$1.80	$3.15	$21.60
$0.08	$1.68	$2.40	$4.20	$28.80
$0.10	$2.10	$3.00	$5.26	$36.00
$0.12	$2.52	$3.60	$6.31	$43.20
$0.16	$3.36	$4.80	$8.41	$57.60
$0.20	$4.20	$6.00	$10.51	$72.00

In addition to the savings you'll enjoy from retrofitting to electronic T8 lamps, saving 6 watts with our ULTim8™ ballast actually PAYS FOR THE BALLAST!

* *4 Lamp 120 volt ULTim8™ Ballast saves 6 watts per ballast versus Standard Electronic Ballasts*

** *60,000 Hours represents a minimum rated life expectancy.*

STANDARD LIGHT LEVEL SYSTEMS

"HE" Family (.87 Ballast Factor)

Ballast Type	Lamp Type	Model Number*	120 volt Input Watts			277 volt Input Watts		
			2 Lamp	3 Lamp	4 Lamp	2 Lamp	3 Lamp	4 Lamp
Electronic–Standard	F32T8	Bx32IyyyRH-A	58	86	112	58	86	110
ULTim8™ "HE"	F32T8	Bx32IyyyHE	54	80	106	53	79	105
THE ULTim8™ HIGH EFFICIENCY BALLAST INCREMENTAL SAVINGS			4	6	6	5	7	5
Additional Options with the F32T8/ES (30 Watt Lamp)								
ULTim8™ "HE"	F32T8/ES (30 Watt)	Bx32IyyyHE	51	76	100	50	75	99
30W HIGH EFFICIENCY LAMP & ULTim8™ BALLAST INCREMENTAL SAVINGS			7	10	12	8	11	11
Additional Options with the new F28T8 Lamp								
ULTim8™ "HE"	F28T8	Bx32IyyyHE	48	72	94	47	71	93
28W HIGH EFFICIENCY LAMP & ULTim8™ BALLAST INCREMENTAL SAVINGS			10	14	18	11	15	17

**For model numbers: X = 2, 3, or 4 for the quantity of lamps yyy = 120 or 277 for the input voltage*

Here's how to calculate energy savings:

Number of watts saved x annual hrs. of operation x Energy cost = Total svgs. per fixture
1,000 (watts per kilowatt)

Savings per fixture x number of fixtures storewide = annual facility savings

For a large retail store:

60 watts saved x 4,000 hrs. x $0.10 per Kwh = $24 saved per fixture annually
1,000

$24 per fixture x 500 fixtures = $12,000 annual facility savings

ULTim8™ A Triad® Brand

SAVINGS COMPARISON CHART

	Standard F32T8 Lamps (Input Watts)			F32T8/ES–30W Lamps (Input Watts)		F28T8 28W Lamps (Input Watts)		Universal Lighting Technologies Catalog Numbers	
	Standard Electronic	ULTim8™ Universal Voltage	ULTim8™ Dedicated Voltage	ULTim8™ Universal Voltage	ULTim8™ Dedicated Voltage	ULTim8™ Universal Voltage	ULTim8™ Dedicated Voltage	ULTim8™ Universal Voltage	ULTim8™ Dedicated Voltage
LOW POWER (.77 B.F.)									
1L–120V	27	25		23		21		B132IUNVEL-A	
1L–277V	27	25		23		21			
2L–120V	51	48	47	46	44	43	41	B232IUNVEL-A	B232I120EL
2L–277V	51	48	47	46	44	43	41		B232I277EL
3L–120V	76	74	70	70	66	66	62	B332IUNVEL-A	B332I120EL
3L–277V	76	73	70	69	65	65	61		B332I277EL
4L–120V	100	97	95	91	89	85	83	B432IUNVEL-A	B432I120EL
4L–277V	98	96	93	90	87	84	81		B432I277EL
STANDARD LIGHT OUTPUT (.87 B.F.)									
1L–120V	30	28		26		24		B132IUNVHE-A	
1L–277V	32	28		26		24			
2L–120V	58	55	54	52	51	49	48	B232IUNVHE-A	B232I120HE
2L–277V	58	54	53	51	50	48	47		B232I277HE
3L–120V	86	83	80	79	76	75	72	B332IUNVHE-A	B332I120HE
3L–277V	86	81	79	77	75	73	71		B332I277HE
4L–120V	112	109	106	103	100	97	94	B432IUNVHE-A	B432I120HE
4L–277V	110	106	105	100	99	94	93		B432I277HE

Choosing The Right High Efficiency Lamp/Ballast System

Here are the key considerations in selecting your lamp/ballast system:

- **Maximum Energy Savings**
  - Install the .77 Ballast Factor (EL) with F28T8 lamps
- **Maintain Existing Light Levels of 34 Watt T12 System**
  - Install the .77 Ballast Factor (EL) with standard F32T8 or F32T8/ES (30 watt) lamps
- **Energy Savings for New Construction**
  - Specify .87 Ballast Factor (HE)
  - Install high lumen lamps for maximum light output
  - Install 30 watt or 28 watt lamps for additional energy savings

Universal™ Lighting Technologies

IT'S EASY TO REACH US

By mail: Universal Lighting Technologies, Inc.
26 Century Blvd., Suite 500
Nashville, TN 37214-3683

General information: 615-316-5100

Technical Engineering Services: 1-800-BALLAST

Web site: www.universalballast.com

E-mail: webmaster@universalballast.com

© 2003 Universal Lighting Technologies, Inc.
All specification information is subject to change without notification.

ULTim80301

How to Sell

QUICKTRONIC® T8 INSTANT START UNIVERSAL
High Efficiency Systems

PRODUCT COMPARISON

WHAT ARE QUICKTRONIC T8 HIGH EFFICIENCY SYSTEMS?

- Energy saving electronic ballasts for T8 lamps
- 30-50% energy savings over F34T12/SS & magnetic ballast systems
- Save 6% energy over standard electronic ballasts
  - Over 90% efficient
  - Over 100 LPW with OCTRON® SUPERSAVER® ECOLOGIC® lamps
- Available in normal ballast factor (0.88) low ballast factor (0.78) and high ballast factor (1.18-1.20) types
- Universal voltage (120-277V)
- <10% THD
- Small can enclosure
- Operating frequency > 40kHz for reduced interference with IR control systems
- Covered by QUICK 60+® warranty when paired with SYLVANIA OCTRON, OCTRON XP™ and OCTRON SUPERSAVER lamps

QUICKTRONIC HIGH EFFICIENCY ADVANTAGES OVER COMPETITIVE PRODUCTS

QUICKTRONIC QHE ADVANTAGES OVER STANDARD T8 INSTANT START BALLASTS

- Energy Savings
  - Saves 6% (2-7 watts) over standard electronic ballasts
  - No reduction in light or life
- Lowest T8 system wattage when QHE-ISL is combined with FO28/SS lamps
  - 2-lamp system watts = 42W
  - 4-lamp system watts = 84W

QUICKTRONIC QHE ADVANTAGES OVER UNIVERSAL ULTIM8 & GE ULTRAMAX BALLASTS

- Higher ballast factor
  - 0.88 vs. 0.87 or 0.78 vs. 0.77
  - 2% higher maintained lumens
- ULT does not offer high ballast factor types
- Lower input watts on most low ballast factor types (see product comparison on p. 2)
- QUICK 60+ warranty
  - Up to 3 years on OCTRON XP lamps & up to 5 years on ballast
  - ULT warranty is 5 years on ballast, but no published lamp warranty
- Higher system lumens than GE
- QHE Ballasts operate at >42 kHz[1]

1 The GE ULTRAMAX ballasts may operate in the same frequency range (56-58kHz) as the SENSORMATIC "anti theft" systems. When using the GE ULTRAMAX ballasts there may be ***compatibility issues*** *with SENSORMATIC systems used at exit/entrance doors in many NATIONAL AND LOCAL STORE CHAINS.*

QUICKTRONIC QHE ADVANTAGES OVER ADVANCE OPTANIUM BALLASTS

- Universal voltage
  - Advance has dedicated 120V & 277V models
  - Less inventory with universal voltage
- More types available
  - Advance does not offer a 1-lamp type and publishes 1-lamp data when operated on 2-lamp ballast
  - Advance does not offer high ballast factor types
- QUICK 60+ warranty
  - Advance has Plus 90 Protection Warranty. Up to 5 years on ballast but lamp warranty does not cover catastrophic failures

SEE THE WORLD IN A NEW LIGHT SYLVANIA

ORDERING AND SPECIFICATION INFORMATION

	Item Number	Description	Input Voltage	Lamp Type	No. of Lamps	Ballast Factor	Initial System Lumens	Input Watts (120/277V)	Availability
Normal Ballast Factor	49851	QHE 1X32T8/UNV ISN-SC	120-277	FO32/XP FO30/SS FO28/SS	1	0.88	2640 2510 2400	28 26 25	Now
	49853	QHE 2X32T8/UNV ISN-SC	120-277	FO32/XP FO30/SS FO28/SS	2	0.88	5280 5015 4800	55 52 48	Now
	49855	QHE 3X32T8/UNV ISN-SC	120-277	FO32/XP FO30/SS FO28/SS	3	0.88	7920 7525 7195	83/82 78/77 72	Now
	49857	QHE 4X32T8/UNV ISN-SC	120-277	FO32/XP FO30/SS FO28/SS	4	0.88	10,560 10,030 9590	108/107 102/101 95	Now
Low Ballast Factor	49861	QHE 1X32T8/UNV ISL-SC	120-277	FO32/XP FO30/SS FO28/SS	1	0.78	2340 2220 2125	25 24 22	Now
	49863	QHE 2X32T8/UNV ISL-SC	120-277	FO32/XP FO30/SS FO28/SS	2	0.78	4680 4445 4250	48 45 42	Now
	49865	QHE 3X32T8/UNV ISL-SC	120-277	FO32/XP FO30/SS FO28/SS	3	0.78	7020 6670 6380	73 69 63	Now
	49867	QHE 4X32T8/UNV ISL-SC	120-277	FO32/XP FO30/SS FO28/SS	4	0.78	9360 8890 8500	95 89 84	Now
High Ballast Factor	49871	QHE 1X32T8/UNV ISH-SC	120-277	FO32/XP FO30/SS FO28/SS	1	1.20	3600 3420 3270	38 36 33	Now
	49873	QHE 2X32T8/UNV ISH-SC	120-277	FO32/XP FO30/SS FO28/SS	2	1.20	7200 6840 6540	74/73 70/69 65/64	Now
	49875	QHE 3X32T8/UNV ISH-SC	120-277	FO32/XP FO30/SS FO28/SS	3	1.18	10620 10090 9650	111/109 104/103 98/96	Now

PRODUCT COMPARISON

Manufacturer*	Ballast Description	Lamp Type	No. Lamps	Input Watts (120/277)	Ballast Factor	Mean System Lumens**	Min. Start Temp.
Normal Ballast Factor							
SYLVANIA	QHE 2X32T8/UNV ISN-SC	FO32/XP/ECO FO30/XP/SS/ECO FO28/XP/SS/ECO	2	55 52 48	0.88	4963 4717 4506	0°F 60°F 60°F
UNIVERSAL	B232IUNVHE-A	FO32/XP/ECO FO30/XP/SS/ECO FO28/XP/SS/ECO	2	55/54 52/51 49/48	0.87	4907 4663 4454	0°F 60°F 60°F
GE	GE232-MAX-N/ULTRA	F32T8/XL/SPX/ECO F32T8/XL/SP41WM/ECO F28T8/UMX	2	54/53 53/52 49/48	0.87	4872 4524 4498	0°F 60°F 60°F
ADVANCE	ROP/VOP 2P32-SC***	FO32/XP/ECO FO30/XP/SS/ECO FO28/XP/SS/ECO	2	55 52 N/A	0.88	4963 4717 4506	0°F 60°F 60°F
SYLVANIA	QHE 4X32T8/UNV ISN-SC	F32T8/XP FO30/SS FO28/SS	4	108/107 102/101 95	0.88	9926 9434 9012	0°F 60°F 60°F
UNIVERSAL	B432IUNVHE-A	FO32/XP/ECO FO30/XP/SS/ECO FO28/XP/SS/ECO	4	109/106 103/100 97/94	0.87	9814 9326 9012	0°F 60°F 60°F
GE	GE432-MAX-N/ULTRA	F32T8/XL/SPX/ECO F32T8/XL/SP41WM/ECO F28T8/UMX	4	109/107 105/103 98/96	0.87	9744 9048 8996	0°F 60°F 60°F
ADVANCE	ROP/VOP 4P32-SC***	FO32/XP/ECO FO30/XP/SS/ECO FO28/XP/SS/ECO	4	108/107 102/101 N/A	0.88	9814 9434 N/A	0°F 60°F 60°F

Manufacturer*	Ballast Description	Lamp Type	No. Lamps	Input Watts (120/277)	Ballast Factor	Mean System Lumens**	Min. Start Temp.
Low Ballast Factor							
SYLVANIA	QHE 2X32T8/UNV ISL-SC	FO32/XP/ECO FO30/XP/SS/ECO FO28/XP/SS/ECO	2	48 45 42	0.78	4399 4056 3994	0°F 60°F 60°F
UNIVERSAL	B232IUNVEL-A	FO32/XP/ECO FO30/XP/SS/ECO FO28/XP/SS/ECO	2	48 46 43	0.77	4343 4127 3942	0°F 60°F 60°F
GE	GE232-MAX-L/ULTRA	F32T8/XL/SPX/ECO F32T8/XL/SP41WM/ECO F28T8/UMX	2	48 46 44	0.77	4312 4004 3981	0°F 60°F 60°F
ADVANCE	ROP/VOP 2P32-LW-SC***	FO32/XP/ECO FO30/XP/SS/ECO FO28/XP/SS/ECO	2	48 45 N/A	0.78	4446 4056 N/A	0°F 60°F 60°F
SYLVANIA	QHE 4X32T8/UNV ISL-SC	F32T8/XP FO30/SS FO28/SS	4	95 89 84	0.78	8798 8112 7987	0°F 60°F 60°F
UNIVERSAL	B432IUNVEL-A	FO32/XP/ECO FO30/XP/SS/ECO FO28/XP/SS/ECO	4	97 91 85	0.77	8686 8112 7988	0°F 60°F 60°F
GE	GE432-MAX-L/ULTRA	F32T8/XL/SPX/ECO F32T8/XL/SP41WM/ECO F28T8/UMX	4	97/96 92/91 88/87	0.77	8624 8008 7884	0°F 60°F 60°F
ADVANCE	ROP/VOP 2P32-LW-SC***	FO32/XP/ECO FO30/XP/SS/ECO FO28/XP/SS/ECO	4	96/95 89/88 N/A	0.78	8798 8112 N/A	0°F 60°F 60°F
High Ballast Factor							
SYLVANIA	QHE 2X32T8/UNV ISH-SC	FO32/XP/ECO FO30/XP/SS/ECO FO28/XP/SS/ECO	2	74/73 70/69 65/64	1.20	6768 6432 6114	0°F 60°F 60°F
GE	GE-232-MAX-H/ULTRA	F32T8/XL/SPX/ECO F32T8/XL/SP41WM/ECO F28T8/UMX	2	74/74 71/70 66/65	1.17 1.18 1.20	6552 6136 6204	0°F 60°F 60°F
SYLVANIA	QHE 3X32T8/UNV ISH-SC	FO32/XP/ECO FO30/XP/SS/ECO FO28/XP/SS/ECO	3	111/109 104/103 98/96	1.18	13,310 12,650 12,083	0°F 60°F 60°F
GE	GE-332-MAX-H/ULTRA	F32T8/XL/SPX/ECO F32T8/XL/SP41WM/ECO F28T8/UMX	3	148/145 144/141 135/132	1.17 1.18 1.20	13,104 12,272 12,408	0°F 60°F 60°F

* Competitive data from manufacturer's Web site material

** Mean lumens at 40% of rated life

***ROP – 120V model, VOP – 277V model

FOR SALES PARTNER USE ONLY

DO NOT DISTRIBUTE TO CUSTOMERS

January 2005

ULTRAMAX ELECTRONIC BALLASTS

GE Lighting

TRANSFORMING THE POWER OF LIGHT™

BREAKTHROUGH TECHNOLOGY THAT DRAMATICALLY IMPROVES EFFICIENCY, SIMPLIFIES INSTALLATION AND DELIVERS OPTIMAL LAMP PERFORMANCE.

ULTRAMAX
ELECTRONIC BALLAST

The right ballast. The right performance. The right light.

GE revolutionizes lighting again with new, breakthrough technology.

In the GE labs, our engineers have developed a new breed of ballasts to make lighting systems that save more energy, are more adaptable, and deliver optimal lamp performance. The innovative, patented technology in our new UltraMax electronic ballasts exceeds expectations, and is like nothing else available.

There's more to ULTRAMAX

- **M** – Multi-Voltage Control
- **A** – Arc-Guard Protection
- **X** – Xtreme Efficiency

Multi-Voltage technology means a single UltraMax model handles voltage from 120 through 277.

UltraMax Ballasts can virtually "read" the incoming voltage and adapt automatically to any voltage from 108V to 305V. The benefits of Multi-Voltage Control (MVC) are obvious:

- Fewer models handle more jobs, eliminating inventory hassles.
- MVC simplifies installation and eliminates guesswork at the job site.
- MVC compensates for incoming voltage fluctuations or variations from unreliable power.

120 ▸ 277 volts
MVC
Multi-Voltage Control

One patented GE ballast handles 120V to 277V

UltraMax is the only full line of T8 ballasts with a UL Type CC Anti-Arc Rating.

UL Type CC Rating is a stringent designation of protection against arcing in electrical devices. GE's Arc-Guard design eliminates the damaging effects arcing can have on lamps, ballasts and sockets.

High efficiency delivers up to 40% energy savings.

Ballasts are the new frontier of energy efficiency. Systems combining UltraMax electronic ballasts and T8/WM lamps can deliver up to 40% energy savings over standard electromagnetically ballasted T12 systems. Since energy costs are typically 80% of the overall cost of light, a more efficient system can pay for itself in a very short time and provide an excellent return on investment.

UltraMax is ultra lamp friendly.

With an industry low lamp current crest factor (LCCF) of 1.4, UltraMax ensures optimal lamp operation and maximum lamp life, which can save on lamp and maintenance costs.

COMPARE THE ENERGY USE OF A THREE LAMP FIXTURE

1. STANDARD T12/WM SYSTEM
2. STANDARD ELECTRONIC T8 SYSTEM
3. ULTRAMAX L SYSTEM WITH GE T8 WATT-MISER

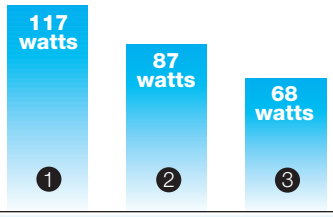

transforming the power of light™

Active Current Regulation (ACR) technology is a patented advantage.

UltraMax's patented ACR modular design means individual inverter modules regulate the output current to each lamp. So, unlike conventional ballasts, if one lamp fails, the remaining lamps are not forced to operate at a higher current. This ensures optimal lamp performance.

Anti-Striation Control for better light quality, with no striations.

UltraMax is the only line of T8 ballasts with Anti-Striation Control. This advanced technology eliminates the maintenance issues caused by striating lamps, often referred to as spiraling or swirling. This provides a flicker- and worry-free environment.

Fully parallel independent lamp operation makes system easier to maintain.

If one lamp fails, all the others in the system stay lit. That means system maintenance is easier to manage.

UltraMax is ultra-cool.

UltraMax's high efficiency design results in ultra-cool operation that can provide additional AC energy savings, especially during peak demand periods.

A big idea in a small package.

The UltraMax housing is smaller, lower-profile and lightweight. That can be a big help in retrofits. It also means future fixture designs can be more compact and streamlined.

Every unit is tested and proven before it's shipped.

GE does 100% burn-in on every UltraMax ballast using our extreme open/short test, which simulates undesirable and harsh-use situations, so you are assured of a system you can rely on right out of the box.

GE Six Sigma quality backed by a full 5-year warranty.

UltraMax is designed by GE's expert engineers and custom-manufactured to our exacting Six Sigma specifications, all backed by a full 5-year warranty. And, when used with GE T8 lamps you get our Total Performance System™ warranty, covering both lamps and ballasts, so you know you are making the right choice.

SIX SIGMA QUALITY

For more information, visit www.gelighting.com.

A FULL FAMILY OF HIGH EFFICIENCY MULTI-VOLTAGE BALLASTS FOR ALL T8 APPLICATIONS.

ULTRAMAX ELECTRONIC BALLAST **L**

The Low watt option for Max energy savings. With a ballast factor of .77, the L line is the most energy efficient choice. It provides adequate illumination for most applications. For 1, 2, 3, and 4 T8 lamps in 2', 3', and 4' lengths.

ULTRAMAX ELECTRONIC BALLAST **N**

The Normal light option balances efficiency and illumination. The most-used type of ballast, the N line saves energy without sacrificing lumens. A ballast factor of .87 meets most application needs. For 1, 2, 3, and 4 T8 lamps in 2', 3', 4', and 8' lengths.

ULTRAMAX ELECTRONIC BALLAST **H**

The choice for High light output. With a ballast factor of 1.15, UltraMax H delivers the most lumens for maximum light or when you want more savings using fewer lamps. This is the first high-efficiency high-light output line for 2, 3 **and 4** T8 lamps.

13 UltraMax L, N and H models can replace more than 40 conventional electronic ballasts.

ACTUAL SIZE

See for yourself how different UltraMax ballasts perform.

	BALLAST FACTOR	*SYSTEM LUMENS (2850 Lumens/Lamp)	*INPUT WATTS	LUMENS PER WATT
L	.77	4389	48	91
N	.87	4959	53	94
H	1.15	6555	73	90

* For a 2-Lamp F32T8 System at 277V

Safety
- No PCBs
- UL Listed
  - Class P, Type 1
  - Type CC
  - Type HL (Hazardous Location)

Application Information
- Minimum Starting Temperature: 0°F, 18°C
- Maximum Ambient Temperature: 105°F, 40°C
- Sound Rated A
- Remote Mounting: 18' maximum lead length, 18 AWG
- High Frequency Lamp Operation: Above 60 kHz

Physical Parameters
(Except for the 4H model)
Length: 9.50 in.
Width: 1.70 in.
Height: 1.2 in.
Weight: 1.4 lbs.

Applications:

Offices	Plants
Retail	Hotels
Schools	Warehouses
Universities	Hospitals

transforming the power of light™

System Performance Comparison Matrix

Compare the overall performance of a GE UltraMax system to conventional lamp and ballast systems.

Lamps	Electromagnetic Ballasts	Electronic Ballasts					
2-Lamp System Performance 4' Fluorescent							
	Electromagnetic E.S.	**Rapid Start**	**Low Power (L)**	**Normal**	**UltraMax L**	**UltraMax N**	**UltraMax H**
Watt-Miser T12 (CW)	Watts: 74 BF: 0.90 Light: 100% RLPW: 100%	Watts: 64 BF: 0.86 Light: 96% RLPW: 110%	Not Available	Not Available	Not Available	Not Available	Not Available
F32T8 & F32T8/XL (SP)	Watts: 69 BF: 0.88 Light: 116% RLPW: 125%	Watts: 63 BF: 0.88 Light: 116% RLPW: 137%	Watts: 51 BF: 0.78 Light: 103% RLPW: 149%	Watts: 58 BF: 0.88 Light: 116% RLPW: 148%	Watts: 48 BF: 0.77 Light: 102% RLPW: 157%	Watts: 53 BF: 0.87 Light: 115% RLPW: 160%	Watts: 73 BF: 1.15 Light: 152% RLPW: 154%
F32T8/WM ULTRA & XL (SP)	Not Recommended	Not Recommended	Watts: 48 BF: 0.78 Light: 102% RLPW: 157%	Watts: 54 BF: 0.88 Light: 115% RLPW: 157%	Watts: 46 BF: 0.77 Light: 100% RLPW: 161%	Watts: 52 BF: 0.87 Light: 113% RLPW: 161%	Watts: 70 BF: 1.15 Light: 150% RLPW: 158%
3-Lamp System Performance 4' Fluorescent							
	Electromagnetic E.S.	**Rapid Start**	**Low Power (L)**	**Normal**	**UltraMax L**	**UltraMax N**	**UltraMax H**
Watt-Miser T12 (CW)	Watts: 117 BF: 0.91 Light: 100% RLPW: 100%	Watts: 93 BF: 0.86 Light: 95% RLPW: 119%	Not Available	Not Available	Not Available	Not Available	Not Available
F32T8 & F32T8/XL (SP)	Watts: 105 BF: 0.88 Light: 115% RLPW: 128%	Watts: 93 BF: 0.88 Light: 115% RLPW: 145%	Watts: 77 BF: 0.78 Light: 102% RLPW: 155%	Watts: 87 BF: 0.88 Light: 115% RLPW: 155%	Watts: 72 BF: 0.77 Light: 101% RLPW: 163%	Watts: 80 BF: 0.87 Light: 114% RLPW: 166%	Watts: 109 BF: 1.15 Light: 150% RLPW: 161%
F32T8/WM ULTRA & XL (SP)	Not Recommended	Not Recommended	Watts: 72 BF: 0.78 Light: 101% RLPW: 163%	Watts: 81 BF: 0.88 Light: 113% RLPW: 164%	Watts: 68 BF: 0.77 Light: 99% RLPW: 171%	Watts: 77 BF: 0.87 Light: 112% RLPW: 170%	Watts: 104 BF: 1.15 Light: 148% RLPW: 167%
4-Lamp System Performance 4' Fluorescent							
	Electromagnetic E.S.	**Rapid Start**	**Low Power (L)**	**Normal**	**UltraMax L**	**UltraMax N**	**UltraMax H**
Watt-Miser T12 (CW)	Watts: 148 BF: 0.90 Light: 100% RLPW: 100%	Watts: 128 BF: 0.86 Light: 96% RLPW: 110%	Not Available	Not Available	Not Available	Not Available	Not Available
F32T8 & F32T8/XL (SP)	Watts: 138 BF: 0.88 Light: 116% RLPW: 125%	Watts: 120 BF: 0.88 Light: 116% RLPW: 143%	Watts: 100 BF: 0.78 Light: 103% RLPW: 152%	Watts: 114 BF: 0.88 Light: 116% RLPW: 151%	Watts: 96 BF: 0.77 Light: 102% RLPW: 158%	Watts: 107 BF: 0.87 Light: 115% RLPW: 159%	TBD
F32T8/WM ULTRA & XL (SP)	Not Recommended	Not Recommended	Watts: 95 BF: 0.78 Light: 102% RLPW: 158%	Watts: 107 BF: 0.88 Light: 115% RLPW: 159%	Watts: 91 BF: 0.77 Light: 100% RLPW: 163%	Watts: 103 BF: 0.87 Light: 113% RLPW: 163%	TBD

Notes:
Light refers to "mean" lumen output relative to highlighted T12 Electromagnetic E.S. (energy saving) ballast systems.
RLPW is mean system Lumens/Watt relative to highlighted T12 Electromagnetic E.S. (energy saving) ballast systems.
Watts shown at 277 volts.

Ordering Guide and System Wattage

There's a combination of GE UltraMax ballasts and T8 lamps that can make virtually any lighting system perform better. The chart below lets you see for yourself.

Starting	Power	# Lamps	GE UltraMax Ballasts			F32T8 Input Watts			F32T8/WM Input Watts			Units Per Case
			Product Code	Description	Input Voltage	Input Watts†	In Fixture△ Open	In Fixture△ Enclosed	Input Watts†	In Fixture△ Open	In Fixture△ Enclosed	
Instant Start	Low	1	49706	GE-132-MAX-L/Ultra	Multi-Volt 120	25	24	24	24	23	23	10
					277	25	24	24	24	23	23	
		2	49707	GE-232-MAX-L/Ultra	Multi-Volt 120	48	48	47	46	46	45	10
					277	48	48	47	46	46	45	
		3	49708	GE-332-MAX-L/Ultra	Multi-Volt 120	73	72	71	69	68	67	10
					277	72	71	70	68	67	66	
		4	49709	GE-432-MAX-L/Ultra	Multi-Volt 120	97	95	93	92	90	88	10
					277	96	93	92	91	89	87	
	Normal	1	49771	GE-132-MAX-N/Ultra	Multi-Volt 120	28	28	27	27	26	26	10
					277	28	28	27	27	26	26	
		2	49772	GE-232-MAX-N/Ultra	Multi-Volt 120	54	54	53	53	52	51	10
					277	53	53	52	52	51	50	
		3	49773	GE-332-MAX-N/Ultra	Multi-Volt 120	82	80	78	78	77	74	10
					277	80	78	77	77	75	73	
		4	49774	GE-432-MAX-N/Ultra	Multi-Volt 120	109	105	103	105	101	98	10
					277	107	103	101	103	99	97	
	High	2	49775	GE-232-MAX-H/Ultra	Multi-Volt 120	74	71	69	71	69	67	10
					277	73	70	68	70	68	66	
		3	49776	GE-332-MAX-H/Ultra	Multi-Volt 120	111	105	102	106	102	97	10
					277	109	103	100	104	100	96	
		4	49777	GE-432-MAX-H/Ultra*	Multi-Volt 120	TBD	TBD	TBD	TBD	TBD	TBD	10
					277	TBD	TBD	TBD	TBD	TBD	TBD	
			GE UltraMax Ballasts			F96T8 Input Watts			F96T8/WM Input Watts			Units Per Case
			Product Code	Description	Input Voltage	Input Watts†	In Fixture△ Open	In Fixture△ Enclosed	Input Watts†	In Fixture△ Open	In Fixture△ Enclosed	
	Normal	1	49766	GE-159-MAX-N/Ultra*	Multi-Volt 120	TBD	TBD	TBD	TBD	TBD	TBD	10
					277	TBD	TBD	TBD	TBD	TBD	TBD	
		2	49767	GE-259-MAX-N/Ultra*	Multi-Volt 120	TBD	TBD	TBD	TBD	TBD	TBD	10
					277	TBD	TBD	TBD	TBD	TBD	TBD	

* Available first quarter of 2003

† Denotes standard laboratory non-fixture open bench testing.

△ In fixture watts represent typical field operating conditions with ballast and lamps in fixture/luminaire. Open fixture denotes non-lensed fixture/luminaire. Enclosed fixture denotes lensed fixture/luminaire.

For more information, visit www.gelighting.com.

GE Lighting

TRANSFORMING THE POWER OF LIGHT™

GE Lighting Web Center

GE is taking the lead in developing innovative uses of e-business technology to provide to you product and application information that can help you achieve your business goals. From interactive catalogs that deliver lamp and system performance information to Design Wizards that help in lamp and ballast selection and application, GELighting.com is the lighting site you will want to visit frequently.

www.GELighting.com

16233 (1/03) Printed in the USA

Product Information Bulletin

OCTRON® Four Foot FO28 XP® SUPERSAVER® ECO®

Fluorescent Lamps

SYLVANIA 28 Watt OCTRON FO28 XP SUPERSAVER ECOLOGIC lamps operate on standard T8 instant start systems and provide 12.5% energy savings over standard 32 Watt OCTRON lamps. At $.10/kWh and 4000 hours of operation per year, the 12.5% savings translates to a savings of $5.70 per fixture per year for a 4-lamp fixture with a normal ballast factor, instant start ballast. The 94% lumen maintenance of the OCTRON FO28/800XP/SS/ECO lamp assures that light levels are maintained while energy is saved. These lamps pass the Federal TCLP test, classifying them as non-hazardous waste in most states. Group relamp to realize the benefits of these OCTRON lamps in your facility.

- 28 Watt, 4-foot, SUPERSAVER energy saving, T8 lamp
- 12.5% energy savings compared to standard 32W T8 lamp
- ECOLOGIC – Designed to pass TCLP[1]
- Initial lumens – 2725
- 94% lumen maintenance at 9600 hours
- 3000K, 3500K & 4100K
- 85 CRI
- Retrofit lamp for existing T8 instant start systems
  - 18,000 hours average rated life @ 3 hrs per start
  - 26,000 hours average rated life @ 12 hrs per start
- Approved on OSRAM SYLVANIA QUICKTRONIC® PSX and PSN ballasts.
  - 24,000 hours average rated life @ 3 hrs per start
  - 30,000 hours average rated life @ 12 hrs per start
- Minimum starting temperature: 60°F
- Not dimmable

SYLVANIA OCTRON T8 ECOLOGIC fluorescent lamps are designed to pass the Federal Toxicity Characteristic Leaching Procedure (TCLP) criteria for classification as non-hazardous waste in most states[2].

1. TCLP test results are based on NEMA LL Series standards and are available on request.
2. Lamp disposal regulations may vary; check your local & state regulations.

Product Availability

Lamp Type	Wattage	Color Temperature	CRI
FO28/830XP/SS/ECO	28	3000K	85
FO28/835XP/SS/ECO	28	3500K	85
FO28/841XP/SS/ECO	28	4100K	85

Application Information

Applications

Retail
Office
Schools
Hospitals
Industrial
Many applications with T8 instant start ballasts currently using 32W T8 lamps

Fixtures

Contact your local fixture agent for available fixtures.

Ballast Information

Contact your OSRAM SYLVANIA representative for a list of compatible electronic operating systems.

Application Notes

1. Recommended to be used on T8 F32 Instant Start circuit with minimum starting voltage of 550V rms.

Application Notes (continued)

2. Not recommended to be used: (1) with Rapid Start circuits unless the open circuit voltage is greater than 550V, (2) at lamp ambient temperatures below 60°F or in drafty locations, (3) on low power factor ballasts, (4) dimming ballasts, or (5) inverter-operated emergency lighting systems unless any of the above equipment is specifically listed for 28 watt lamps. Any of the above situations could result in lamp starting and stabilization problems, or system compatibility issues.
3. Can operate on QUICKTRONIC® PSX and PSN ballasts. 24,000 hours average rated life at 3hrs per start, 30,000 hours average rated life at 12hrs per start.
4. Fixture must conform to ANSI C78.1 – 1991 requirements for luminaire design.

Sample Specification

Lamp(s) shall be OCTRON® FO28 XP® SUPERSAVER ECOLOGIC 4-foot lamp(s) having medium bi-pin bases. Lamp(s) shall be designed to pass the Federal TCLP test in force at the time of manufacture. Lamp(s) shall have an average rated life of 18,000 hours at 3 hours per start when operated on T8 instant start ballasts, 2725 initial lumens, 94% lumen maintenance at 9600 hours, a correlated color temperature of (3000K, 3500K or 4100K) and a CRI of 85. The OCTRON SUPERSAVER ECOLOGIC lamp(s) shall be operated on QUICKTRONIC electronic, high frequency ballasts with complete system warranty from the manufacturer covering lamps and ballast.

Warranty Information

QUICK 60+® warranty for OSRAM SYLVANIA lamp and ballast combination

Limited 36 month lamp warranty and a five year ballast warranty is possible if both lamps and ballast are provided by OSRAM SYLVANIA. See the QUICK 60+ warranty for details and restrictions.

System Comparison

4-Lamp Instant Start Systems: FO28/800XP/SS/ECO vs FO32/700/ECO

Lamp Type	Initial Lumens	Average Rated Life (hrs.)	Ballast	Ballast Factor	System Watts	System Lumens @ 8000 hrs.	Relative Lumens	Relative Lamp Life	% Energy Savings	LPW
FO32/741/ECO	2800	15,000	4-lamp IS	.90	114	9070	100%	100%	–	80
FO28/841XP/SS/ECO	2725	18,000	4-lamp IS	.90	100	9319	103%	120%	12.5	93
FO32/741/ECO	2800	15,000	4-lamp IS-L	.77	98	7761	100%	100%	–	79
FO28/841XP/SS/ECO	2725	18,000	4-lamp IS-L	.77	86	7973	103%	120%	12.5	93
FO28/841XP/SS/ECO	2725	24,000	4-lamp PSX	.71	82/80[1]	7352	95%	160%	17/19[1]	90/92[1]

1. Ballast is universal input, data is presented 120V/277V

Ordering and Specification Information

Item Number	Ordering Abbreviation	Watts	Bulb	Base	Initial Lumens	Mean Lumens[1]	Avg. Rated Life (hrs.)[2]	CCT	CRI
22177	FO28/830XP/SS/ECO	28	T8	Medium bi-pin	2725	2562	18,000	3000K	85
22178	FO28/835XP/SS/ECO	28	T8	Medium bi-pin	2725	2562	18,000	3500K	85
22179	FO28/841XP/SS/ECO	28	T8	Medium bi-pin	2725	2562	18,000	4100K	85

1. Measured @ 9600 hours, 95% of initial lumens @ 8000 hours.
2. Based on 3 hours/start on instant start ballasts. At 12 hours/start, average rated life = 26,000 hours on instant start ballasts.

Ordering Guide

FO	28	/	8	35	XP	/	SS	/	ECO
Fluorescent OCTRON	Wattage = 28		CRI = 85	Color Temperature 30 = 3000K 35 = 3500K 41 = 4100K	EXtended Performance		SUPERSAVER		ECOLOGIC

Dimensions

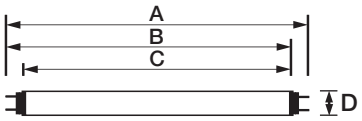

	(A) Maximum Overall Length (in.)	(B) Base Face to Opposite Pin (in.)	(C) Max. Base Face to Base Face (in.)	(D) Max. Outside Diameter (in.)
FO28	47.78”	Min. 47.41” Max. 47.50”	47.22”	1.1”

Technical Information

Typical Fluorescent Lamp Mortality

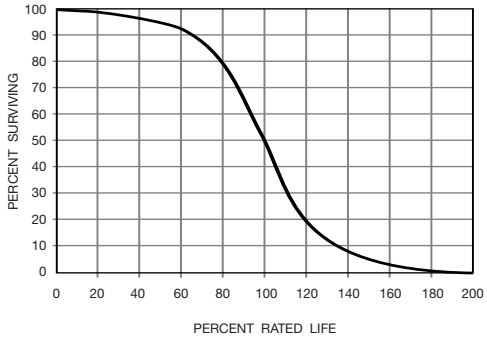

OCTRON 830

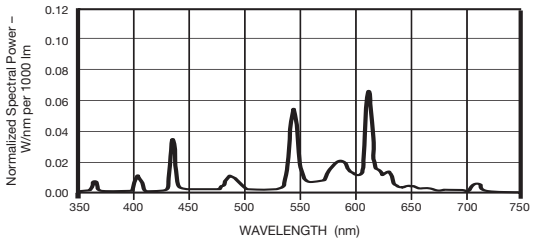

OCTRON 835

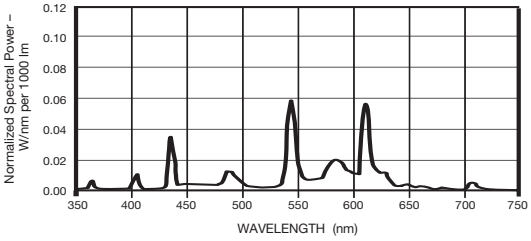

OCTRON 841

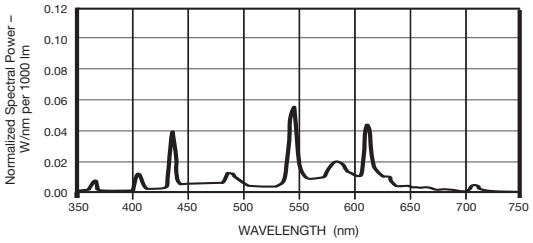

OSRAM SYLVANIA
National Customer
Service and Sales Center
18725 N. Union Street
Westfield, IN 46074

Industrial & Commercial

Phone: 1-800-255-5042
Fax: 1-800-255-5043

National Accounts

Phone: 1-800-562-4671
Fax: 1-800-562-4674

OEM/Specialty Markets

Phone: 1-800-762-7191
Fax: 1-800-762-7192

Photo-Optic

Phone: 1-888-677-2627
Fax: 1-800-762-7192

In Canada
OSRAM SYLVANIA LTD.
Headquarters
2001 Drew Road
Mississauga, ON L5S 1S4

Industrial & Commercial

Phone: 1-800-263-2852
Fax: 1-800-667-6772

Special Markets

Phone: 1-800-265-2852
Fax: 1-800-667-6772

Visit our website: www.sylvania.com

SYLVANIA, OCTRON, SUPERSAVER, ECOLOGIC, QUICK 60+ and XP are registered trademarks of OSRAM SYLVANIA Inc.
QUICKTRONIC is a registered trademark of OSRAM, GmbH, used under license by OSRAM SYLVANIA Inc.

© 2004 OSRAM SYLVANIA

Printed on recycled paper. 09/04

GE Consumer & Industrial
Lighting

F28T8/SP/UMX/ECO

F28T8/UMX/ECO with the GE ULTRAMAX™ Ballast

Up to 44% Reduction in Wattage Compared to T12 System; Saves Energy
Long 24,000 Hours Life @ 12 hours / start; Extends Relamp Cycle
Multi-Voltage and Striation-Control Ballast; ULTRA Performance

Convert from F34/T12 (148 Watts) to F28T8 with UltraMax™ -L Ballast (87 Watts):

Lamps per Fixture: 4 **System Watts Saved: 61**

KWH Rate	Operating Hours / Year 4000	5500	8760	Over Lamp Life 28W 24000
$0.06	$14.64	$20.13	$32.06	$87.84
$0.08	$19.52	$26.84	$42.75	$117.12
$0.10	$24.40	$33.55	$53.44	$146.40
$0.12	$29.28	$40.26	$64.12	$175.68

F28T8/UMX/ECO with T8 Instant Start Ballasts*

Up to 12% Reduction in Wattage; Saves Energy vs. Standard T8's.
Long 24,000 Hours Life @ 12 hours / start; Extends Relamp Cycle
Remove Your Existing 32 Watt T8 and replace it with the GE 28 Watt T8

Relamp Existing F32T8 (97Watts) to F28T8 (87 Watts):

Lamps per Fixture: 4 **System Watts Saved: 10**

KWH Rate	Operating Hours / Year 4000	5500	8760	Over Lamp Life 28W 24000
$ 0.06	$ 2.40	$ 3.30	$ 5.26	$ 14.40
$ 0.08	$ 3.20	$ 4.40	$ 7.01	$ 19.20
$ 0.10	$ 4.00	$ 5.50	$ 8.76	$ 24.00
$ 0.12	$ 4.80	$ 6.60	$ 10.51	$ 28.80

28 Watt; 4' Fluorescent; Highly Energy Efficient

TCLP-Compliant

Designed for Instant Start Ballasts with a Minimum Open Circuit Voltage: 550

High Quality Color Rendering;
85 (SP30 & SP35); 82 (SP41); 80 (SP50)

*Recommended for Use on Instant Start Ballasts with Open Circuit Voltage > 550 Volts
Striations may occur on ballasts not utilizing "striation-controlling" feature.

New in 5000K

imagination at work

F28T8/SP/UMX/ECO Lamp Specifications

Product Description	F28T8/SP30/UMX/ECO	F28T8/SP35/UMX/ECO	F28T8/SP41/UMX/ECO	F28T8/SP50/UMX/ECO
Product Code	00255	00256	00257	42554
Case Quantity	36	36	36	36
Physical Characteristics				
Bulb Designation	T8	T8	T8	T8
Bulb Material	Soda Lime	Soda Lime	Soda Lime	Soda Lime
Max Bulb Diameter (D)	1.10" (27.9mm)	1.10" (27.9mm)	1.10" (27.9mm)	1.10" (27.9mm)
Nominal Bulb Diameter (D)	1" (25.4mm)	1" (25.4mm)	1" (25.4mm)	1" (25.4mm)
Base Type	Medium Bipin (G13)	Medium Bipin (G13)	Medium Bipin (G13)	Medium Bipin (G13)
Max Face to End of Opposing Pin (B)	47.50" (1206.5mm)	47.50" (1206.5mm)	47.50" (1206.5mm)	47.50" (1206.5mm)
Min Face to End of Opposing Pin (B)	47.40" (1204.0mm)	47.40" (1204.0mm)	47.40" (1204.0mm)	47.40" (1204.0mm)
Max Overall Length (C)	47.78" (1213.6)	47.78" (1213.6)	47.78" (1213.6)	47.78" (1213.6)
Nominal Overall Length (C)	48"	48"	48"	48"
TCLP Compliant	yes	yes	yes	yes
Low Mercury	yes	yes	yes	yes
Electrical Characteristics				
Nominal Lamp Watts (W)	28	28	28	28
Nominal Lamp Voltage (V)	115	115	115	115
Nominal Lamp Current (A)	0.275	0.275	0.275	0.275
Nominal Lamp Operating Frequency (Hz)	50-60Hz	50-60Hz	50-60Hz	50-60Hz
Minimum Starting Temp (°F)	60	60	60	60
Photometric Characteristics				
Reference - Initial Lumens	2750	2750	2750	2650
- Mean Lumens (40% rated life)	2585	2585	2585	2490
Nominal Efficacy (Lumens/Watt)	98	98	98	95
Rated Life (hrs) 3 hr cycle - IS ballast	18000	18000	18000	18000
Rated Life (hrs) 12 hr cycle - IS ballast	24000	24000	24000	24000
Color Rendering Index (Ra) CRI	85	85	82	80
Correlated Color Temperature (Kelvin)	3000	3500	4100	5000

See GE Ballast Catalog For GE UltraMax™ Ballast Specifications

Fluorescent Lamp Spectra
F28T8 colors – SP30

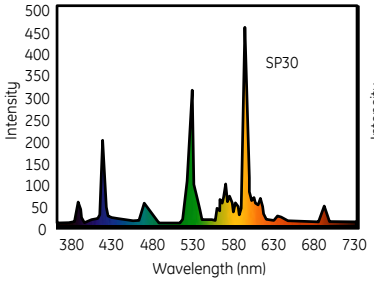

Fluorescent Lamp Spectra
F28T8 colors – SP35

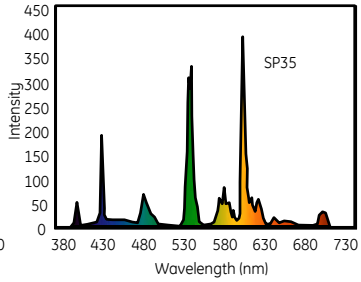

Fluorescent Lamp Spectra
F28T8 colors – SP41

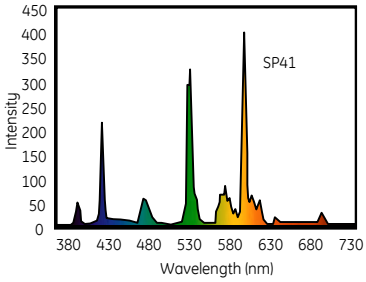

Fluorescent Lamp Spectra
F28T8 colors – SP50

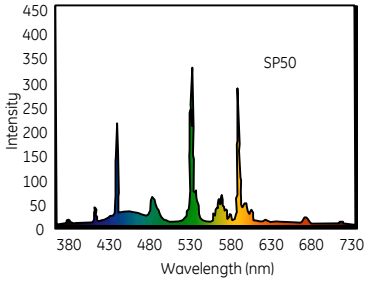

Lamp Mortality

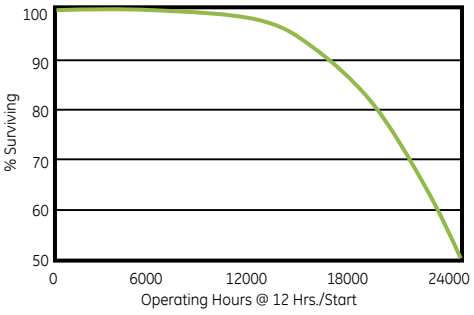

Lumen Maintenance

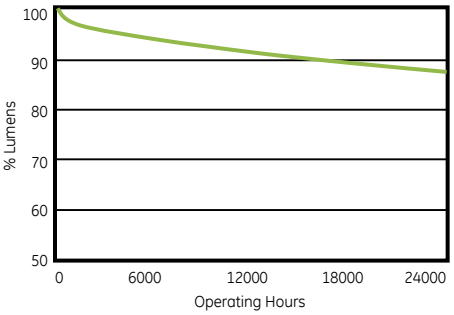

F28T8 Specifier Statement:

Lamps shall be GE Starcoat® T8 UltraMax™ lamps having medium bi-pin bases. F28T8 lamps shall be designed to pass the Federal TCLP test in force at the time of manufacture. F28T8 rated life shall be at least 18,000 hr at 3 hours per start on a T8 instant start ballast. F28T8 lamps shall have initial lumens of at least 2750 (2650 for 5000K) and mean lumens of at least 2585 (2490 for 5000K), and a color rendering index of at least 80 for 5000K, 82 for the 4100K lamp and 85 for the 3500K and 3000K. F28T8 lamps shall have a nominal wattage of 28 watts. Lamps shall be operated on GE UltraMax™ electronic, high frequency ballasts or other instant start ballasts with Open Circuit Voltages greater than 550 Volts.

For additional product and application information, please consult GE's Website: www.gelighting.com

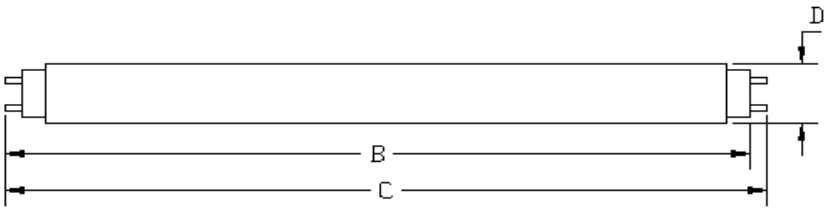

28342-2005 Printed in USA

R-2S40-TP

Brand Name	MARK III
Ballast Type	Magnetic
Starting Method	Rapid Start
Lamp Connection	Series
Input Voltage	120
Input Frequency	60 HZ
Status	Active

Electrical Specifications

Lamp Type	Num. of Lamps	Rated Lamp Watts	Min. Start Temp (°F/C)	Input Current (Amps)	Input Power (Watts)	Ballast Factor	MAX THD %	Power Factor	Lamp Current Crest Factor	B.E.F.
F40T10	2	40	50/10	0.73	87	0.96	20	0.99	1.5	1.11
F40T12	2	40	50/10	0.73	87	0.95	20	0.99	1.5	1.10
* F40T12/ES	2	34	60/16	0.63	72	0.90	20	0.95	1.7	1.25
F40T12/U	2	40	50/10	0.73	87	0.95	20	0.99	1.6	1.09
F40T12/U/ES	2	34	60/16	0.63	73	0.91	20	0.97	1.8	1.24

Wiring Diagram

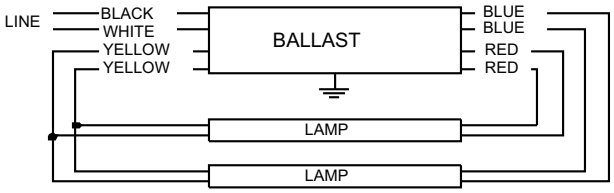

Diag. 21

The wiring diagram that appears above is for the lamp type denoted by the asterisk (*)

Standard Lead Length (inches)

	in.	cm.
Black	22	
White	22	
Blue	26	
Red	26	
Yellow	36	
Gray		
Violet		

	in.	cm.
Yellow/Blue		
Blue/White		
Brown		
Orange		
Orange/Black		
Black/White		
Red/White		

Enclosure

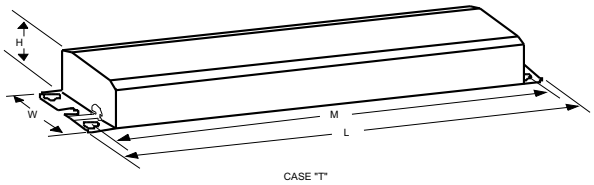

Enclosure Dimensions

OverAll (L)	Width (W)	Height (H)	Mounting (M)
9.50 "	2.375 "	1.5 "	8.90625 "
9 1/2	2 3/8	1 1/2	8 29/32
24.1 cm	6 cm	3.8 cm	22.6 cm

Revised 07/01/1999

Data is based upon tests performed by Advance Transformer in a controlled environment and representative of relative performance. Actual performance can vary depending on operating conditions. Specifications are subject to change without notice. All specifications are nominal unless otherwise noted.

ADVANCE
O'HARE INTERNATIONAL CENTER · 10275 WEST HIGGINS ROAD · ROSEMONT, IL 60018
Customer Support/Technical Service: Phone: 800-372-3331 · Fax: 630-307-3071
Corporate Offices: Phone: 800-322-2086

IOP2P32LWSC@120V	
Brand Name	OPTANIUM 2.0
Ballast Type	Electronic
Starting Method	Instant Start
Lamp Connection	Parallel
Input Voltage	120-277
Input Frequency	50/60 HZ
Status	Active

Electrical Specifications

Lamp Type	Num. of Lamps	Rated Lamp Watts	Min. Start Temp (°F/C)	Input Current (Amps)	Input Power (ANSI Watts)	Ballast Factor	MAX THD %	Power Factor	MAX Lamp Current Crest Factor	B.E.F.
F32T8/ES (28W)	1	28	60/16	0.22	26	0.90	10	0.99	1.6	3.46
* F32T8/ES (28W)	2	28	60/16	0.35	42	0.77	10	0.99	1.6	1.83

Wiring Diagram

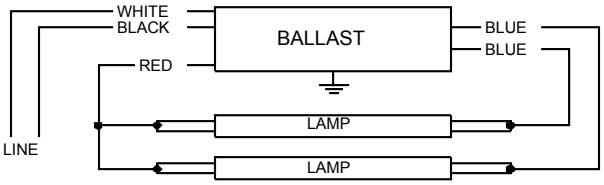

Diag. 64

The wiring diagram that appears above is for the lamp type denoted by the asterisk (*)

Standard Lead Length (inches)

	in.	cm.
Black	25	63.5
White	25	63.5
Blue	31	78.7
Red	37	94
Yellow		0
Gray		0
Violet		0

	in.	cm.
Yellow/Blue		0
Blue/White		0
Brown		0
Orange		0
Orange/Black		0
Black/White		0
Red/White		0

Enclosure

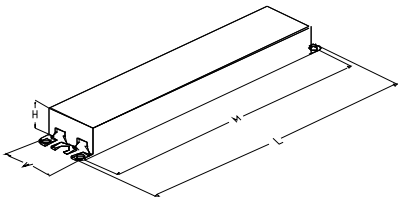

Enclosure Dimensions

OverAll (L)	Width (W)	Height (H)	Mounting (M)
9.50 "	1.7 "	1.18 "	8.90 "
9 1/2	1 7/10	1 9/50	8 9/10
24.1 cm	4.3 cm	3 cm	22.6 cm

Revised 08/23/2006

Data is based upon tests performed by Advance Transformer in a controlled environment and representative of relative performance. Actual performance can vary depending on operating conditions. Specifications are subject to change without notice. All specifications are nominal unless otherwise noted.

ADVANCE
O'HARE INTERNATIONAL CENTER · 10275 WEST HIGGINS ROAD · ROSEMONT, IL 60018
Customer Support/Technical Service: Phone: 800-372-3331 · Fax: 630-307-3071
Corporate Offices: Phone: 800-322-2086

Compact Fluorescent Lamps and Fixtures

Product Information Bulletin

SYLVANIA DULUX® EL

Electronic Compact Fluorescent Lamps

- Saves 75% in energy compared to similar lumen output incandescent lamps
- Variety of shapes and wattages to satisfy most applications
- 6000 – 10,000 hour average rated lamp life
- Flicker-free starting
- 2700K – warm white deluxe, similar to incandescent
- 3000K – soft white, similar to halogen lamps
- 3500K – *Daylight Extra*,™ white and more natural light
- 5000K
- 82 CRI
- Circline available in 8" diameter
- Medium base for easy replacement of ordinary incandescent lamps

Classic A-line, Twist and Triple lamps may be used to replace ordinary incandescent lamps, while Mini Twist lamps with improved efficacy and a diminutive shape are ideal for smaller fixtures.

DULUX EL lamps are also available to replace incandescent reflector lamps. The modular Circline lamp is popular for use in table and floor lamps where the decorative G25 and G30 globe lamps may be used in chandeliers and vanity fixtures.

With excellent color rendition across a broad range of color temperature options, DULUX EL lamps are a brilliant alternative to incandescent and halogen.

Product Availability

Lamp Type	Wattage
General Purpose Triple	15W, 20W, 23W
Mini Twist	7W, 11W, 13W, 19W, 23W
Twist	15W, 20W, 23W, 27W, 30W, 40W*
3-Way Twist	28W
Modular Circline	30W
Classic	14W A19, A-shape
Globe	11W/G25, 15W/G30
Bullet	15W/B20
Decor	4W, 7W
Reflector	15W/BR30, 20W/BR40

*Available 01/2005

Application Information

Applications

Sconces
Table lamps
Ceiling fixtures
Decorative & vanity fixtures
Security lighting
Difficult to service areas

Application Notes

1. Cannot be installed on dimming circuits
2. Outdoor application — use only in enclosed fixtures to avoid exposure to weather
3. Do not use in emergency exit fixtures or lights
4. Do not use on electronic timers or photocells
5. Meets CSA, FCC and UL requirements
6. Never disassemble or modify lamp except for replacing 30W Circline lamps
7. Use only 120V AC, 60Hz circuit
8. Install and remove lamp from fixture grasping plastic base
9. Best performance achieved when operated at 77°F/25°C

Lamp Comparison

DULUX® EL	CFL Lumens	CFL Life	Similar Incandescant	Incandescant Lumens	Incandescant Life	Watts Saved	Energy* Savings	CFL Life vs. Incandescent
CF7EL/MINITWIST	375	8000	25A/W	160	2500	18	$14	3 x
CF11EL/MINITWIST	600	8000	40A/W	465	1500	29	$23	5 x
CF13EL/MINITWIST	800	8000	60A/W	850	1000	47	$37	8 x
CF13EL/MINITWIST	800	10,000	60A/W	850	1000	47	$47	10 x
CF19EL/MINITWIST	1200	8000	75A/W	1170	750	56	$44	11 x
CF19EL/MINITWIST	1200	10,000	75A/W	1170	750	56	$56	13 x
CF23EL/MINITWIST	1600	8000	100A/W	1690	750	77	$61	11 x
CF23EL/MINITWIST	1600	10,000	100A/W	1690	750	77	$77	13 x
CF15EL/TWIST	850	10,000	60A/W	850	1000	45	$45	10 x
CF20EL/TWIST	1200	10,000	75A/W	1170	750	55	$55	13 x
CF23EL/TWIST	1450	10,000	90A/W	1450	750	67	$67	13 x
CF27EL/TWIST	1750	10,000	100A/W	1690	750	73	$73	13 x
CF30EL/TWIST	2000	6000	100A/W	1690	750	70	$42	8 x
CF40EL/TWIST	2600	8000	150A/W	2640	750	110	$88	11x
CF28EL/3WAY/TWIST (12W)	600	6000	30/100A21	270	1200	18	$10	5 x
CF28EL/3WAY/TWIST (19W)	1100	6000	30/100A21	860	1200	51	$30	5 x
CF28EL/3WAY/TWIST (28W)	1600	6000	30/100A21	1130	1200	72	$43	5 x
CF14EL/A19	800	6000	60A/W	850	1000	46	$27	6 x
CF15EL/B/830/MED	700	6000	60A/W	850	1000	45	$27	6 x
CF15EL/830/MED	850	10,000	60A/W	850	1000	45	$45	10 x
CF20EL/830/MED	1200	10,000	75A/W	1170	750	55	$55	13 x
CF23EL/830/MED	1450	10,000	90A/W	1450	750	67	$67	13 x
CF11EL/G25	450	6000	40G25	370	1500	29	$17	4 x
CF15EL/G/830/MED	700	6000	60G25/W	680	1500	45	$27	4 x
CF4EL/DECO/CANDELABRA	160	6000	15B10	125	1500	11	$6	4 x
CF7EL/DECO/MEDIUM	280	6000	25F/CL	210	1500	18	$10	4 x
CF14EL/A19/YELLOW	475	6000	60A/Y/RP	550	1000	46	$27	6 x
CF30EL/CIRC/830/MED	1800	10,000	100A/W	1690	750	70	$70	13 x
CF15EL/BR30	560	6000	65BR30/FL	620	2000	50	$30	3 x
CF20EL/BR40	900	8000	75BR40/FL	680	2000	55	$44	4 x

*Energy savings over life of EL lamp at $0.10/kWh

Dimensions

SOFT WHITE DULUX EL Triple, Twist, Globe, Bullet, DECO & Classic (A)

	(A) MOL (in)	(B) Diameter (in)	(C) Base Width (in)
CF7EL Mini Twist	4.40	1.82	1.60
CF11EL MiniTwist	4.50	1.82	1.60
CF13EL Mini Twist	4.60	1.82	1.60
CF19EL Mini Twist	5.20	2.25	2.05
CF23EL Mini Twist	5.75	2.25	2.05
CF15EL Twist	5.10	2.28	2.17
CF20EL Twist	5.50	2.28	2.17
CF23EL Twist	5.90	2.28	2.17
CF27EL Twist	6.10	2.28	2.17
CF30EL Twist	5.13	2.50	2.17
CF40EL Twist	5.25	2.69	2.06
CF28/3WAY Twist	5.75	2.60	2.17
CF14EL/A19	4.75	2.40	
CF15EL/B	5.50	2.40	
CF15EL Triple	5.60	1.49	2.05
CF20EL Triple	6.30	1.49	2.05
CF23EL Triple	6.93	1.49	2.05
CF11EL/G25	4.60	3.20	
CF15EL/G30	6.50	3.90	
CF4/EL/DECO/CANDELABRA	4.25	1.40	
CF7/EL/DECO/MEDIUM	5.00	2.88	
CF30EL/CIRC/830/MED	2.80	8.00	
CF15EL/BR30	5.60	3.75	
CF15EL/R30	5.80	3.75	
CF20EL/BR40	6.50	4.69	

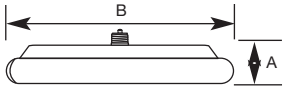

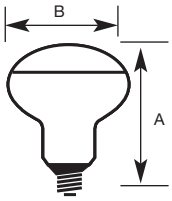

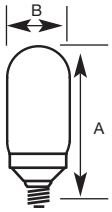

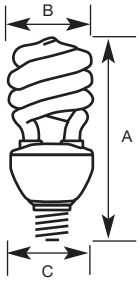

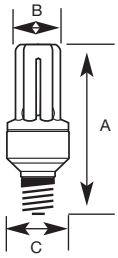

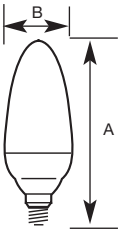

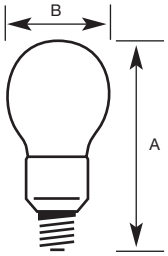

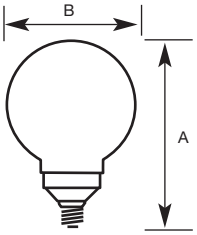

Ordering and Specification Information

	Item Number	Ordering Abbreviation	Pkg.	Bulb Type	Replaced Incandescent Wattage	Nominal Wattage	Initial Lumens	Color Temp.	CRI	Average Rated Life (hrs.)
Mini Twist	29451	CF7EL/MINITWIST/2700K	1/box, 6/cs	Mini Twist	25	7	375	2700K	82	8000
	29379	CF7EL/MINITWIST/1	1/box, 6/cs	Mini Twist	25	7	375	3000K	82	8000
	29371	CF7EL/MINITWIST/BL/1	1/blister, 6/cs	Mini Twist	25	7	375	3000K	82	8000
	29378	CF11EL/MINITWIST/1	1/box, 6/cs	Mini Twist	40	11	600	3000K	82	8000
	29364	CF11EL/MINITWIST/BL/1	1/blister, 6/cs	Mini Twist	40	11	600	3000K	82	8000
	29409	CF13EL/MINITWIST/2700K	1/box, 6/cs	Mini Twist	60	13	800	2700K	82	10,000
	29376	CF13EL/MINITWIST/1	1/box, 6/cs	Mini Twist	60	13	800	3000K	82	8000
	29116	CF13EL/MINITWIST/BL/1	1/blister, 6/cs	Mini Twist	60	13	800	3000K	82	8000
	29151	CF13EL/MINITWIST/DAY	1/box, 6/cs	Mini Twist	60	13	800	3500K	82	8000
	29169	CF13EL/MINITWIST/DAY/BL/1	1/blister, 6/cs	Mini Twist	60	13	800	3500K	82	8000
	29410	CF19EL/MINITWIST/2700K	1/box, 6/cs	Mini Twist	75	19	1200	2700K	82	10,000
	29396	CF19EL/MINITWIST	1/box, 6/cs	Mini Twist	75	19	1200	3000K	82	8000
	29347	CF19EL/MINITWIST/BL/1	1/blister, 5/cs	Mini Twist	75	19	1200	3000K	82	8000
	29367	CF19EL/MINITWIST/DAY/BL/1	1/blister, 5/cs	Mini Twist	75	19	1200	3500K	82	8000
	29411	CF23EL/MINITWIST/2700K	1/box, 6/cs	Mini Twist	100	23	1600	2700K	82	10,000
	29397	CF23EL/MINITWIST	1/box, 6/cs	Mini Twist	100	23	1600	3000K	82	8000
	29394	CF23EL/MINITWIST/BL/1	1/blister, 5/cs	Mini Twist	100	23	1600	3000K	82	8000
	29417	CF23EL/MINITWIST/DAY/BL/1	1/blister, 5/cs	Mini Twist	100	23	1600	3500K	82	8000
Twist	29286	CF15EL/TWIST	1/box, 6/cs	Twist	60	15	850	3000K	82	10,000
	29289	CF15EL/TWIST/1/BL	1/blister, 6/cs	Twist	60	15	850	3000K	82	10,000
	29287	CF20EL/TWIST	1/box, 6/cs	Twist	75	20	1200	3000K	82	10,000
	29290	CF20EL/TWIST/1/BL	1/blister, 6/cs	Twist	75	20	1200	3000K	82	10,000
	29288	CF23EL/TWIST	1/box, 6/cs	Twist	90	23	1450	3000K	82	10,000
	29291	CF23EL/TWIST/1/BL	1/blister, 6/cs	Twist	90	23	1450	3000K	82	10,000
	29412	CF27EL/TWIST/2700K	1/box, 6/cs	Twist	100	27	1750	2700K	82	10,000
	29390	CF27EL/TWIST	1/box, 6/cs	Twist	100	27	1750	3000K	82	10,000
	29391	CF27EL/TWIST/1/BL	1/blister, 6/cs	Twist	100	27	1750	3000K	82	10,000
	29370	CF27EL/TWIST/DAY/1/BL	1/blister, 6/cs	Twist	100	27	1750	3500K	82	10,000
	29353	CF27EL/TWIST/5000K	1/box, 6/cs	Twist	100	27	1750	5000K	82	8000
	29415	CF30EL/TWIST/2700K	1/box, 6/cs	Twist	100	30	2000	2700K	82	6000
	29395	CF30EL/TWIST	1/box, 6/cs	Twist	100	30	2000	3000K	82	6000
	29392	CF30EL/TWIST/1/BL	1/blister, 5/cs	Twist	100	30	2000	3000K	82	6000
	29147	CF40EL/TWIST/2700K*	1/box, 6/cs	Twist	150	40	2600	2700K	82	8000
3-Way Twist	29351	CF28EL/3WAY/TWIST/1	1/box, 6/cs	Twist	30	12	600	3000K	82	6000
				Twist	70	19	1100	3000K	82	6000
				Twist	100	28	1600	3000K	82	6000
	29349	CF28EL/3WAY/TWIST/1/BL	1/blister, 5/cs	Twist	30	12	600	3000K	82	6000
				Twist	70	19	1100	3000K	82	6000
				Twist	100	28	1600	3000K	82	6000
Classic A-line	29345	CF14EL/A19/1/BL	1/blister, 5/cs	A	60	14	800	3000K	82	6000
Bullet	29196	CF15EL/B/830/MED	1/box, 6/cs	B20	60	15	700	3000K	82	6000
	29279	CF15EL/B/830/MED/1/BL	1/blister, 6/cs	B20	60	15	700	3000K	82	6000
General Purpose Triple	29307	CF15EL/830/MED/1	1/box, 6/cs	T4	60	15	850	3000K	82	10,000
	29308	CF20EL/830/MED/1	1/box, 6/cs	T4	75	20	1200	3000K	82	10,000
	29310	CF23EL/830/MED/1	1/box, 6/cs	T4	90	23	1450	3000K	82	10,000
Globe	29344	CF11EL/G25/1/BL	1/blister, 5/cs	G25	40	11	450	3000K	82	6000
	29414	CF11EL/G25/2700K	1/box, 6/cs	G25	40	11	450	2700K	82	6000
	29195	CF15EL/G/830/MED	1/box, 6/cs	G30	60	15	700	3000K	82	6000
	29278	CF15EL/G/830/MED/1/BL	1/blister, 6/cs	G30	60	15	700	3000K	82	6000
Décor	29121	CF4EL/DECO/CANDELABRA/1/BL	1/blister, 6/cs	FLAME	15	4	160	3000K	82	6000
	29167	CF7EL/DECO/MEDIUM/1/BL	1/blister, 6/cs	FLAME	25	7	280	3000K	82	6000
Classic A-line	29346	CF14EL/A19/1/BL/Yellow	1/blister, 5/cs	A	n/a	14	475	----	82	6000
Modular Circline, low profile	29294	CF30EL/CIRC/830/MED	1/box, 6/cs	8" dia.	100	30	1800	3000K	82	10,000**
Reflector	29413	CF15EL/BR30/2700K	1/box, 6/cs	BR30	65	15	560	2700K	82	6000
	29352	CF15EL/BR30/FROST	1/box, 6/cs	BR30	65	15	560	3000K	82	6000
	29331	CF15EL/BR30/FROST/1/BL	1/blister, 5/cs	BR30	65	15	560	3000K	82	6000
	29298	CF15EL/R30/830/MED	1/box, 6/cs	R30	65	15	600	3000K	82	6000
	29366	CF15EL/BR30/DAY/1/BL	1/blister, 5/cs	BR30	65	15	560	3500K	82	6000
	29399	CF20EL/BR40/2700K	1/box, 6/cs	BR40	75	20	900	2700K	82	8000

* Available 01/2005. **Average Rated Life: 10,000 hours for lamp, 50,000 hours for ballast

Operating temperature range of all DULUX EL lamps is 0° to 100°F. Operating temperature range of Bullet lamp is 0° to 122°F

Sample Specification

Lamp shall be a DULUX® EL (15, 20 or 23-Watt Triple) or (15, 20, 23, 27 or 30 Watt Twist) electronic compact fluorescent lamp. Lamps shall have a 52mm (15, 20, 23-Watt Triple or 30 Watt Twist) or 55 mm (15, 20, 23, 27 or 30 Watt Twist) base diameter. Lamp shall have a correlated color temperature of (2700K, 3000K or 5000K) and a CRI of 82. Average rated lamp life shall be (6000, 8000 or 10,000) hours.

Lamp shall be a DULUX EL Mini Twist (7, 11, 13, 19 or 23 Watt). Lamp shall have a correlated color temperature of (2700K or 3500K) and a CRI of 82. Average rated lamp life shall be (8000 or 10,000) hours.

Lamp shall be a DULUX EL 15 Watt BR30 or R30 reflector compact fluorescent lamp. Lamp shall have a correlated color temperature of (2700K or 3000K) and a CRI of 82. Average rated lamp life shall be 6000 hours.

Lamp shall be a DULUX EL 14 Watt A-LINE electronic, compact fluorescent lamp. Lamp shall have a correlated color temperature of 3000K and a CRI of 82. Average rated lamp life shall be 6000 hours.

Lamp shall be a DULUX EL Globe (11 or 15 Watt) electronic, compact fluorescent lamp. Lamp shall have a correlated color temperature of (2700K or 3000K) and a CRI of 82. Average rated lamp life shall be 6000 hours.

Technical Information

Typical Fluorescent Lamp Mortality

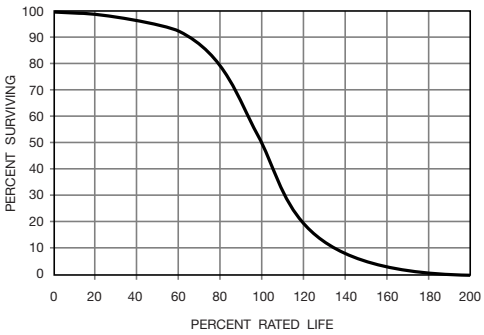

Lumen Maintenance Curve

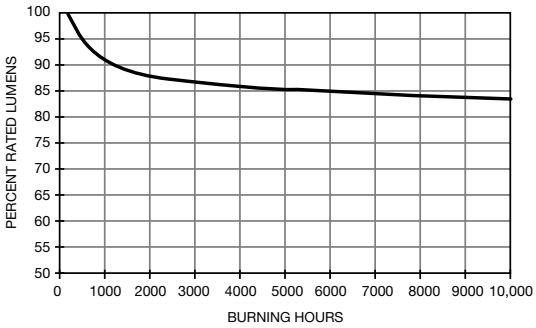

Dulux EL 2700K (Warm White Deluxe)

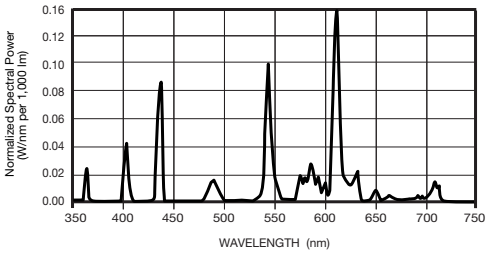

Dulux EL 3000K (Soft White)

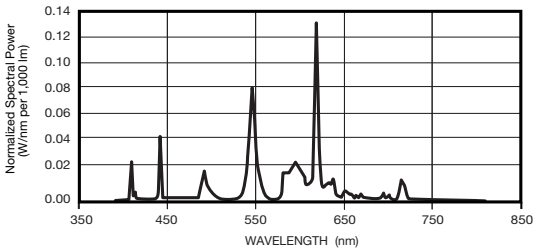

Dulux EL 3500K (Daylight Extra)

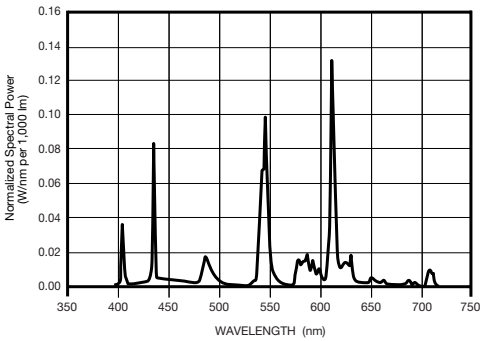

Dulux EL 5000K

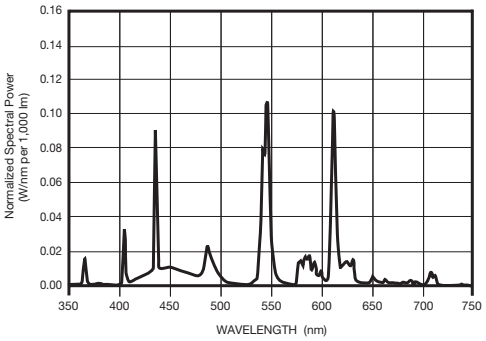

Ordering Guide

CF	15	EL	/	R30	/	830	/	MED
Compact Fluorescent	Wattage: 15 watts	Electronic Ballast		R = Reflector, BR = Bulged Reflector B = Bullet, C = Circline, CL = Classic, G = Globe, TWIST 30 = 30/8" (3.75") diameter 40 = 40/8" (5.0") diameter		8 = 82 CRI 30 = 3000K		Medium Base

OSRAM SYLVANIA
National Customer
Service and Sales Center
18725 N. Union Street
Westfield, IN 46074

Industrial & Commercial

Phone: 1-800-255-5042
Fax: 1-800-255-5043

National Accounts

Phone: 1-800-562-4671
Fax: 1-800-562-4674

OEM/Specialty Markets

Phone: 1-800-762-7191
Fax: 1-800-762-7192

Display/Optic

Phone: 1-888-677-2627
Fax: 1-800-762-7192

In Canada
OSRAM SYLVANIA LTD.
Headquarters
2001 Drew Road
Mississauga, ON L5S 1S4

Industrial & Commercial

Phone: 1-800-263-2852
Fax: 1-800-667-6772

Special Markets

Phone: 1-800-265-2852
Fax: 1-800-667-6772

Visit our website: www.sylvania.com

SYLVANIA is a registered trademark of OSRAM SYLVANIA Inc.
DULUX is a registered trademark of OSRAM GmbH, Germany, used under license.

© 2004 OSRAM SYLVANIA Printed on recycled paper. 11/04

Light Controls

DT-200 Dual Technology Sensor

Product Overview

Description

The Watt Stopper's DT-200 Dual Technology occupancy sensors combine passive infrared (PIR) and ultrasonic technologies into one unit to achieve precise coverage.

Operation

The DT-200 turns lighting on when both PIR and ultrasonic technologies detect occupancy. It can also work with a low voltage switch for manual-on operation. PIR technology senses the difference between infrared energy from a human body in motion and the background space. Ultrasonic technology uses the Doppler Principle and high frequency (40 kHz) ultrasound to sense motion within the space. Once lighting is on, detection by either technology holds lighting on. When no occupancy is detected for the length of the time delay, lighting turns off. The DT can also be set so that only one technology is needed to trigger lighting on or both technologies are needed to hold lighting on. The sensors are low voltage and utilize a Watt Stopper power pack.

SmartSet

Using SmartSet™ technology, the DT-200 sensors require no adjustment at installation. SmartSet monitors the controlled space to identify usage patterns. Using this information, it automatically adjusts the time delay and sensitivity for optimal performance and energy efficiency. The sensor assigns short delays (as low as 5 minutes) for times when the space is usually vacant, and longer delays (up to 30 minutes) for busier times.

Applications

The Watt Stopper dual technology sensors have the flexibility to work in a variety of applications. Mounted at 10 feet, the sensors can cover up to 2000 square feet of walking motion and 1000 square feet of desktop motion. The sensors are designed to control lighting in difficult applications, such as classrooms, where one technology alone could encounter false triggers. In addition to classrooms, the DT-200 works well in warehouses, large offices, open office spaces, and computer rooms.

Features

- Advanced control logic based on RISC microcontroller provides:
  - Detection Signature Processing eliminates false triggers and provides immunity to RFI and EMI
  - SmartSet automatically adjusts sensitivity and time delay settings to fit occupant patterns
  - Walk-through mode turns lights off 3 minutes after the area is initially occupied – ideal for brief visits such as mail delivery
  - Available with built-in light level sensor featuring simple, one-step setup
- Sensors work with low voltage momentary switches to provide manual control
- LEDs indicate occupancy detection
- 8 occupancy logic options give users the ability to customize control to meet application needs
- Available with isolated relay for integration with BAS or HVAC
- Swivel mounting bracket for convenient corner mounting to wall or ceiling

the Watt Stopper
www.wattstopper.com
800.879.8585

DT-200 Technical Information

Specifications

- 24 VDC/VAC and halfwave rectified AC
- 40 kHz frequency ultrasonic transmission
- Time delays: SmartSet (automatic), fixed (5, 10, 15, 20, or 30 minutes), walk-through, test-mode
- Sensitivity adjustment: SmartSet (automatic) or reduced sensitivity (for PIR sensitivity); ultrasonic sensitivity is variable with trimpot
- Built-in light level sensor (DT-200) – works from 2 to 200 footcandles
- Low voltage, momentary switch input for manual operation
- DT-200 contains an isolated relay with N/O and N/C outputs; rated for 1 Amp at 24 VDC/VAC
- 2000 sq ft of walking motion mounted at 10 ft; 1000 sq ft of desktop motion
- Units per power pack: DT-200: up to 2 (B), up to 3 (BZ); DT-205: up to 3 (B), up to 4 (BZ)
- Dimensions: 4.4" x 3.4" x 2" (110.3mm x 85.9mm x 49.6mm) LxWxD
- UL and CUL listed; Five year warranty

Wiring & Mounting

Wiring Diagram

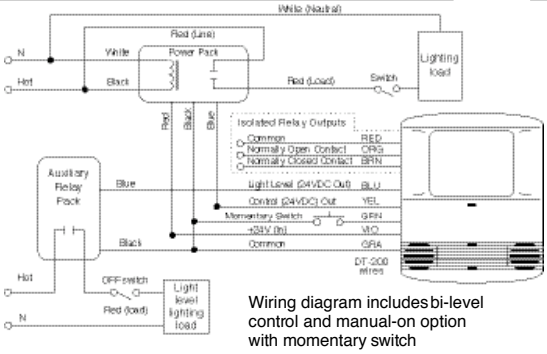

Wiring diagram includes bi-level control and manual-on option with momentary switch

Mounting

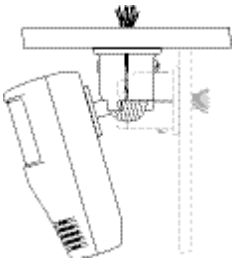

A swivel mounting bracket, attached to the sensor, allows the sensor to be angled for wall or ceiling mounting.

Grooves on the bracket help to achieve desired angle for coverage.

Product Controls

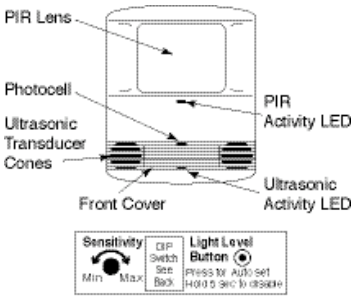

DIP Switch Settings

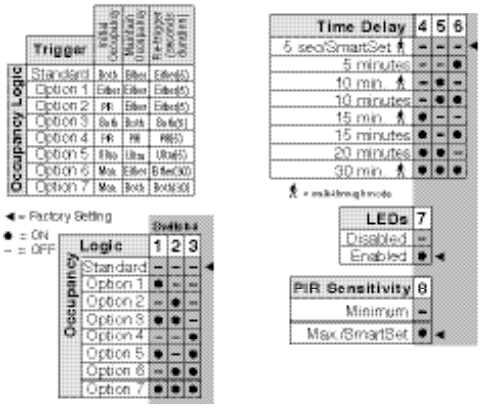

Coverage

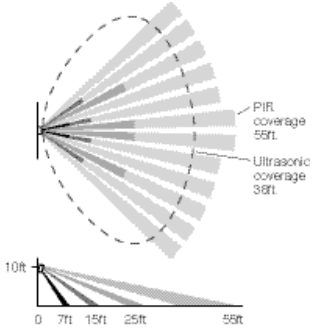

Coverages shown are maximum and represent half-step walking motion. Under ideal conditions, with no barriers or obstacles, coverage for half-step walking motion can reach up to 2000 sq ft while coverage for typical desktop activity can reach up to 1000 sq ft.

Ordering Information

Catalog No.	Description	Voltage	Current	Coverage
DT-200	Dual technology sensor, full-featured; dense wide angle lens	24 VDC	43 mA	up to 2000 sq ft
DT-205	Dual technology sensor; dense wide angle lens	24 VDC	35 mA	up to 2000 sq ft

All units are white and use Watt Stopper power packs. Current consumption can be slightly higher when only one sensor per power pack is used.

The Watt Stopper®, Inc.
Pub. No. 6203

DT-300 Low Voltage 360° Dual Tech Sensor

Product Overview

Description

The Watt Stopper's low profile DT-300 dual technology occupancy sensor combines the benefits of passive infrared (PIR) and ultrasonic technologies. The sensor mounts on the ceiling with a flat, unobtrusive appearance and provides 360 degrees of coverage.

Operation

The DT-300 turns lighting on when both PIR and ultrasonic technologies detect occupancy. It can also work with a low voltage switch for manual-on operation. PIR technology senses the difference between infrared energy from a human body in motion and the background space. Ultrasonic technology uses the Doppler Principle and high frequency (40KHz) ultrasound to sense motion within the space. Once lighting is on, detection by either technology holds lighting on. When no occupancy is detected for the length of the time delay, lighting turns off. The DT-300 can also be set so that only one technology is needed to trigger or both technologies are needed to hold lighting on. The sensors are low voltage and utilize a Watt Stopper power pack.

SmartSet

Using SmartSet™ technology, the DT-300 requires no adjustment at installation. SmartSet continuously monitors the controlled space to identify usage patterns. Using this information, it automatically adjusts the time delay and sensitivity settings for optimal performance and energy efficiency. The sensor assigns short delays (as low as 5 minutes) for times when the space is usually vacant, and longer delays (up to 30 minutes) for busier times.

Applications

The Watt Stopper's patented dual technology has the flexibility to work in a variety of applications, where one technology alone could encounter false triggers. Ideal applications include classrooms, open office spaces, large offices, and computer rooms. In addition, because the DT-300 mounting system makes it easy to install in ceiling tiles or to junction boxes, the sensor has the flexibility to be used in a wide range of spaces.

Features

- Advanced control logic based on RISC microcontroller provides:
  - Detection Signature Processing eliminates false triggers and provides immunity to RFI and EMI
  - SmartSet automatically adjusts sensitivity and time delay settings to fit occupant patterns
  - Walk-through mode turns lights off 3 minutes after the area is initially occupied – ideal for brief visits such as mail delivery
  - Available with built-in light level sensor featuring simple, one-step setup
- The DT-300 works with low voltage momentary switches to provide manual control
- Ultrasonic diffusion technology spreads coverage to a wider area (patent pending)
- LEDs indicate occupancy detection
- Uses depluggable, terminal wiring system for quick and easy installation
- 8 occupancy logic options give users the ability to customize control to meet application needs
- Available with isolated relay for integration with BAS or HVAC

the Watt Stopper®
www.wattstopper.com
800.879.8585

DT-300 Technical Information

Specifications

- 24 VDC/VAC and halfwave rectified AC
- Ultrasonic frequency of 40kHz
- Time delays: SmartSet (automatic), fixed (5, 10, 15, 20, or 30 minutes), walk-through, test-mode
- Sensitivity adjustment: SmartSet (automatic) or reduced sensitivity (for PIR sensitivity); ultrasonic sensitivity is variable with trimpot
- Built-in light level sensor (DT-300) – works from 10 to 300 footcandles
- Low voltage, momentary switch input for manual operation
- DT-300 contains an isolated relay with N/O and N/C outputs; rated for 1 Amp @ 30 VDC/VAC
- Multi-level, 360° Fresnel lens for superior occupancy detection
- Units per power pack: DT-300: up to 2 (B), up to 3 (BZ); DT-305: up to 3 (B), up to 4 (BZ)
- Dimensions: 4.50" diameter x 1.02" deep (114.3mm x 25.91mm)
- UL and CUL listed; Five year warranty

Wiring & Mounting

DT-300 Wiring Diagram

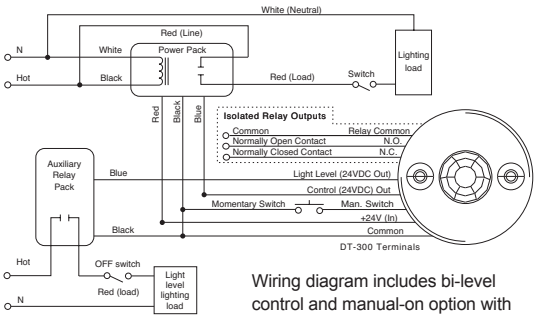

Wiring diagram includes bi-level control and manual-on option with momentary switch

Ceiling Mounting

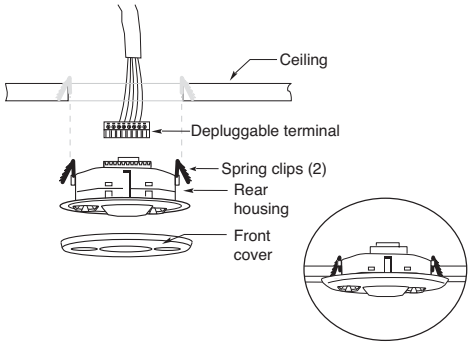

DT-300 Product Controls

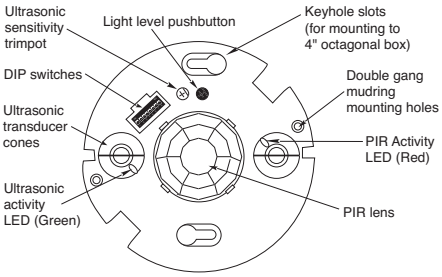

DIP Switch Settings

◄ = Factory Setting
● = ON
– = OFF

Occupancy Logic	Switch# 1	2	3
Standard	–	–	– ◄
Option 1	●	–	–
Option 2	–	●	–
Option 3	●	●	–
Option 4	–	–	●
Option 5	●	–	●
Option 6	–	●	●
Option 7	●	●	●

Time Delay	4	5	6
5 sec/SmartSet 🚶	–	–	– ◄
5 minutes	–	–	●
10 min. 🚶	–	●	–
10 minutes	–	●	●
15 min. 🚶	●	–	–
15 minutes	●	–	●
20 minutes	●	●	–
30 min. 🚶	●	●	●

🚶 = walk-through mode

Occupancy Logic Trigger	Initial Occupancy	Maintain Occupancy	Re-trigger (seconds duration)
Standard	Both	Either	Either(5)
Option 1	Either	Either	Either(5)
Option 2	PIR	Either	Either(5)
Option 3	Both	Both	Both(5)
Option 4	PIR	PIR	PIR(5)
Option 5	Ultra	Ultra	Ultra(5)
Option 6	Man.	Either	Either(30)
Option 7	Man.	Both	Both(30)

LEDs	7
Disabled	–
Enabled	● ◄

PIR Sensitivity	8
Minimum	–
Max./SmartSet	● ◄

The technology control (occupancy logic) options are adjustable by user. The standard setting (recommended for most applications) is both technologies to trigger on, either to hold on.

Coverage

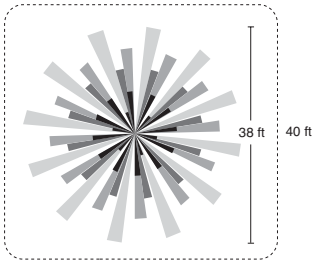

Coverage shown is maximum and represents half-step walking motion. Under ideal conditions, coverage for half-step walking motion can reach up to 1000 sq ft.

Ordering Information

Catalog No.	Description	Voltage	Current	Coverage
DT-300	Dual technology sensor, 360° w/light level & isolated relay	24 VDC/VAC	43 mA	up to 1000 sq ft
DT-305	Dual technology sensor, 360°	24 VDC/VAC	35 mA	up to 1000 sq ft

Sensors are white and use Watt Stopper power packs. Current consumption can be slightly higher when only one sensor per power pack is used.

The Watt Stopper®, Inc.
Pub. No. 14902

sensorswitch®

DAYLIGHTING CONTROL

THE SENSOR SWITCH ADVANTAGE IN DAYLIGHTING CONTROL

Sensor Switch, the industry leader in Occupancy Sensor Products & Technology, has engineered Photocell Technology and Dimming Control to a higher level in a new line of Daylighting Control sensors that achieve maximum energy savings at a fraction of the cost of competitive solutions.

PRACTICAL CONTROL SOLUTIONS

Our daylighting control solutions are available in stand-alone sensors or incorporated into our occupancy sensor products. This approach allows the unique requirements of every room and application to be filled by the most practical and cost effective solution.

- Automatic On/Off Switching (-PC)
- Automatic Dimming Control (-ADC)
- Automatic Stepped Dimming (-DZ)
- Dual Zoned Control (-DZ)

ADVANCED SENSOR INTELLIGENCE

Several features make our sensors the most intelligent in the industry and have allowed us to improve upon traditional daylight harvesting methods.

- Distinguishes between controlled light and ambient light
- Sensor controls are fully integrated, removing the need for separate & expensive control units
- Integrated foot candle measurement, each sensor literally is a foot candle meter
- Automatically adapts to changes in room lighting conditions (lamp aging / burn out, furniture alterations)

INSTALLER FRIENDLY

Besides easing the stress on the pocket book, we've also eased the stress of the installer by simplifying the previously complicated task of calibrating photocell products.

- Automatic Set-Point Programming requires only one installation visit
- Calibration can be done at any time of day & under any lighting conditions
- Integrated 100 hour override timer simplifies lamp burn-in
- Push-button operation, no tools or analog adjustments required

MADE IN U.S.A

SENSOR SWITCH SOLUTIONS

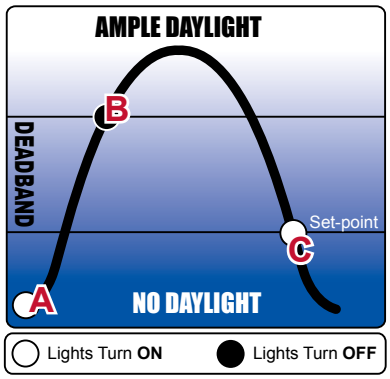

Automatic On/Off Switching (-PC)

The most basic and low cost daylighting control solution, this method can be implemented with standard ballasts.

A No daylight is available; the lights stay on as normal.

B Sufficient daylight is present to maintain the set-point without any contribution from the lights; the lights are switched off. This level is equal to the set-point plus the deadband.

C Daylight levels fall below the set-point; the lights switch back on.

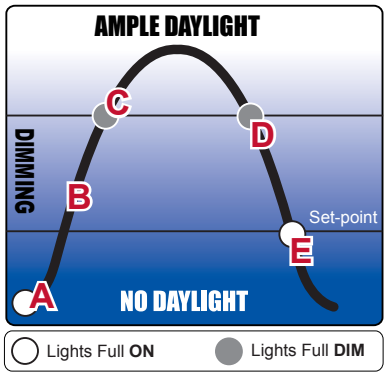

Automatic Dimming Control (-ADC)

Also called Continuous Dimming, this method controls 0-10 VDC dimmable ballasts.

A No daylight is available; the dimmable ballast operates at full bright level (10 VDC).

B Increasing daylight begins to contribute to the overall light level; the ballast is dimmed proportionally.

C Sufficient daylight is present to maintain the set-point; the ballast is held at its full dim setting (0 VDC).

D Daylight levels drop into the dimming range (deadband); the dim level of the ballast is reduced proportionally.

E Daylight levels fall below the set-point; the ballast is back to full bright level (10 VDC).

Sensor Switch Advantage: While other daylighting control solutions provide On/Off Switching and Continuous Dimming in separate discrete products, Sensor Switch offers sensors that combine these methods together for an even more effective solution.

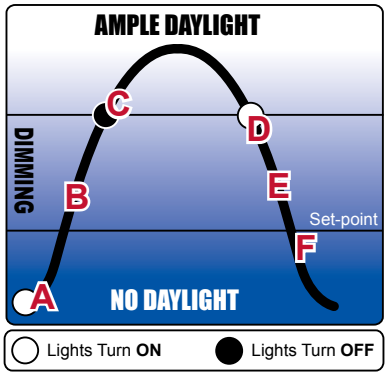

Combination On/Off & Dimming Control (-PC-ADC)

A No daylight is available; the dimmable ballast operates at full bright level (10 VDC).

B Increasing daylight begins to contribute to the overall light level; the ballast is dimmed proportionally.

C Sufficient daylight is present to maintain the set-point; the lights are switched off.

D Daylight levels drop into the dimming range (deadband); the lights are switched on with the ballast set at its full dim level.

E Daylight levels continue to drop; the dim level of the ballast is reduced proportionally.

F Daylight levels fall below the set-point; the ballast is back to full bright level (10 VDC).

DAYLIGHTING CONTROL BASICS

Photocell

Definition: A light-responding electronic component that enables measurement of incident radiant energy (daylight & artificial light).

Sensor Switch Advantage: To ensure a more uniform response from the photocells used in our sensors we utilize a sophisticated calibration procedure during our manufacturing process.

Set-Point

Definition: The target light level that is to be maintained. The function of a daylighting control sensor is to measure the amount of daylight available, compare it with the set-point, and then adjust the level of the controlled lighting accordingly.

Sensor Switch Advantage: Since selection of the proper set-point is crucial to proper operation, we have enabled our sensors to automatically find its optimum set-point.

Deadband

Definition: The light level contributed by the artificial lights being controlled plus a safety range.

Sensor Switch Advantage: Our sensors track the deadband in order to ensure that changes in room lighting conditions (lamp aging / burn out, furniture alterations) are compensated for in the sensor's operation.

Closed Loop Operation

Definition: When the photocell in a sensor can view and provide feedback on the lights it controls. Conversely, "Open Loop" operation occurs when the sensor does not have feedback on the controlled lights.

Sensor Switch Advantage: Our daylighting control sensors can operate open or close loop.

INSTALLATION & CALIBRATION

Automatic Lamp Burn-in

- Integrated 100 hour override timer
- LED blinks continuously to indicate burn-in mode engaged
- Sensor runs automatic set-point programming when 100 hours has elapsed

Set-point Programming

- Automatic set-point programming enables the sensor to self-calibrate
- Exact value selected (in foot candles) can be read out from the sensor via a series of LED flashes
- Additional Manual and Incremental programming modes provide Override Control

Sensor Switch Advantage: To install a Sensor Switch DaylightIng Control Sensor simply engage the Automatic Lamp Burn-in or Set-Point Programming mode and walk away!

Beware of daylighting control solutions that require:

- Calibration "under suitable daylight conditions"
- The room to be in "move-in condition"
- Two light level readings done during day & during night

OPERATIONAL MODES

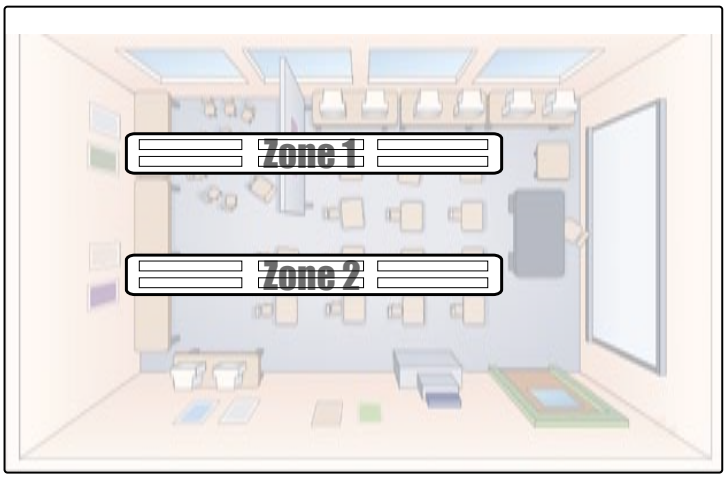

Dual Zone Control

Daylight contribution diminishes as the distance from the source (windows) increases. To address this fact, our Dual Zone (-DZ) option provides control of a second zone of lights via the **Percentage Offset** operational mode. This mode uses a relative set-point for the second zone that is a user selected percentage higher than the primary zone's set-point. The sensor is installed in the first zone, and runs in normal closed loop operation. The second zone runs open loop. This operational mode is ideal for classroom applications with individually controlled parallel rows of lights that are different distances from the windows.

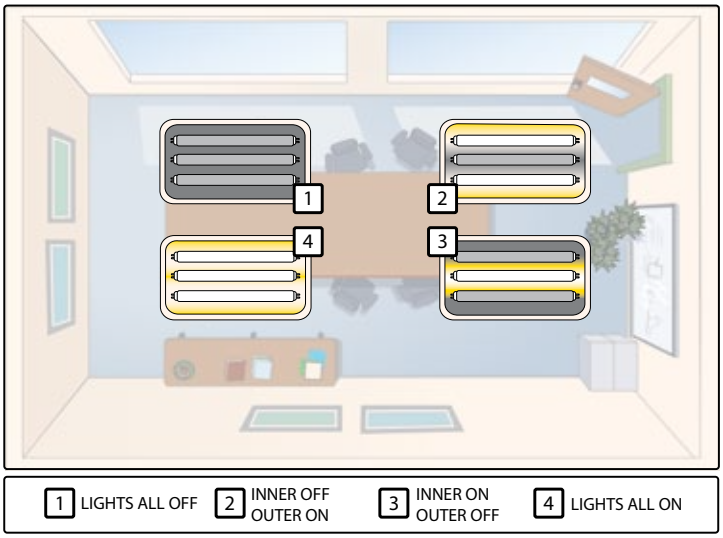

Stepped Dimming Control

Providing automatic daylighting control in rooms wired for stepped dimming (also called **Inboard/Outboard**, or A/B) is possible using our "Duo" operational mode. In this mode the sensor determines the necessary On/Off combination of lights in order to maintain adequate lighting. For example, in a dual switched three lamp fixture the sensor learns the light contribution provided by each of the combinations. Then as daylight conditions change, the necessary lamps will be switched On or Off as needed to achieve desired lighting levels (set-point).

Occupancy Sensors w/ Daylight Override

In these sensors, the presence of sufficient daylight can override the "lights ON" state caused by occupancy (*see graph on right*).

Sensor Switch Advantage: Occupancy sensors with daylighting controls minimize cost and footprint requirements while maximizing energy savings.

LIGHT STATUS		
OCCUPANCY DETECTED		
YES	**ON**	OFF
NO	OFF	OFF
	NO	YES
	SUFFICIENT DAYLIGHT	

Inhibit Only Operation

In this mode occupancy sensors with daylight override can prevent the lights from turning on, however once they are needed and turn on, the daylighting control functionality is disabled until the occupancy timer expires and turns the lights out.

ORDERING INFO

DAYLIGHTING CONTROL SENSORS

Series Number	FEATURES: ON/OFF Switching	Automatic Dimming Control	Stepped Dimming Control (Duo)	Dual Zone Control (Percentage)	Low/Line Voltage
CM-PC	X				Low
CM-PC-DZ	X		X	X	Low
CMR(B)-PC	X				Line
CMR(B)-PC-DZ	X		X	X	Line
CM-ADC		X			Low
CM-ADC-DZ		X		X	Low
CMR(B)-ADC		X			Line
CM-PC-ADC	X	X			Low
CM-PC-ADC-DZ	X	X		X	Low
CMR(B)-PC-ADC	X	X			Line

OCCUPANCY SENSORS w/ DAYLIGHT OVERRIDE

Series Number		OPTIONS: ON/OFF Operation -P	Inhibit Operation -P	Automatic Dimming Control -ADC	Dual Zone Control (Percentage & Stepped) -DZ
Standard & Extended Range					
CM(R)(B)-9	CM(R)(B)-10	X	X	X	
CM(R)(B)-PDT	CM(R)(B)-PDT-10	X	X	X	
RM(R)-9	RM(R)-10	X	X	X	
RM(R)-PDT	RM(R)-PDT-10	X	X	X	
2 Pole Standard & Extended Range					
CMR(B)-9-2P	CMR(B)-10-2P		X		X
CMR(B)-PDT-2P	CMR(B)-PDT-10-2P		X		X
RMR-9-2P	RMR-10-2P		X		X
RMR-PDT-2P	RMR-PDT-10-2P		X		X
Hallway & Wideview Sensors					
HW-13 WV-16	WV-PDT	X	X		
High Bay					
CM(R)(B)-6*/RM(R)-6/CMRB-50*		X	X		
CMR(B)-6-2P*	RMR-6-2P		X		
CMR(B)-6-480*/RMR-6-480/CMRB-50-480*		X	X		
CMRB-50-2P*			X		
WSD Sensors			X		

* Note: Photocell views up through rear of Fixture Mount (Box) sensors and down through lens of Ceiling sensors

sensorswitch®

900 Northrop Road
Wallingford, CT 06492
1.800.PASSIVE
www.sensorswitch.com

sensorswitch

ON/OFF PHOTOCELL SENSOR - CEILING MOUNT, LOW VOLTAGE

TYPICAL APPLICATIONS

- Daylight Harvesting
- On/Off Lighting Control

FEATURES

- Full On/Off Switching of Lighting
- Works as Stand Alone Unit or with Occupancy Sensor System
- Capable of finding optimum set-point
- Digital Set-Point Control
- Programmable via simple push-button commands
- Outputs to Power Pack or Lighting Control System via SPDT Relay
- Green LED Activity Indicator
- 100 Hour Lamp Burn-in Timer Mode

AVAILABLE OPTIONS

- Dual Zone Control (-DZ)
- Low Temp/Hi Humidity (-LT)

SPECIFICATIONS

- Size: Circular, 4.55" Dia., 1.55" Deep (11.56 cm Dia., 3.94 cm Deep)
- Sensor Weight: 5 Ounces
- Sensor Color: White
- Mounting: Ceiling Tile Surface, Round Fixture or Junction Box
- Relative Humidity: 20 to 90% non-condensing
- Operating Temp: 14º to 160º F (-10° to 71° C)
- Storage Temp: -14º to 160º F (-26° to 71° C)
- Operating Voltage: 12-24 VAC/VDC
- UL, CUL, and Title 24 Compliant
- 5 Year Warranty
- Made in U.S.A.

LOW TEMP/HI HUMIDITY(-LT)

- Conformally coated Circuit Board is corrosion resistant from moisture
- Operates down to -40º F(-40º C)

CM-PC

w/ Dual Zone Option!

The *CM-PC* series of On/Off Photocell sensors provide the industry's most intelligent control of lighting for daylight harvesting applications. Ideal for public spaces with windows like vestibules, corridors, or bathrooms; the sensors work by monitoring daylight conditions in a room, then controlling the lighting so as to insure that adequate lighting levels are maintained. The *CM-PC* is used for On/Off lighting control; turning off the lights when sufficient natural light is present and turning them on when additional lighting is necessary. Additionally with the Dual Zone (-DZ) option, a second set of customized control outputs is provided. All *CM-PC* sensors can be used alone or as part of an occupancy sensor system. The sensors are powered with 12 to 24 VAC/VDC and typically operate with a PP-20 or MP-20 Power Pack; enabling complete 20 Amp circuits to be controlled. To add dimming control to the On/Off switching provided by the *CM-PC*, see the Technical Data Sheet on the CM-PC-ADC sensor.

ON/OFF SWITCHING OPERATION

The lights turn "On" when the space's overall light level drops below a programmable threshold called a "set-point". The lights turn "Off" when light is above the set-point plus a 10 to 20% safety factor and deadband. The safety factor will prevent the system from cycling when the light level is very near the set-point. The deadband is the level of light contributed by the artificial lights being controlled. This level is tracked so if the lighting conditions change (for example a lamp burns out) the point at which the lights turn off is adapted accordingly. If the photocell is looking up at skylights and can not view the lights being controlled, there is no deadband and the sensor is said to be working "open loop". There is also an adaptive 5-25 minute delay before the photocell turns the lights off to prevent the system from cycling on a cloudy day; and a 45 second delay before switching from "Off" to "On".

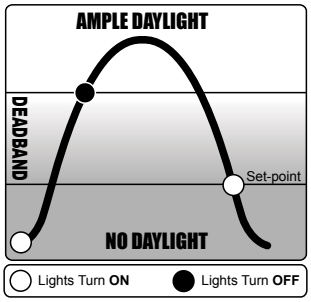

DUAL ZONE (-DZ) OPTION

With the -DZ option, a second low voltage output is provided to control an additional zone of lighting according to one of two operational modes. The default mode, referred to as "Duo" operation, is ideal for A/B switching applications (also called inboard/outboard) as it determines the necessary On/Off combination of the zones in order to maintain adequate lighting. The alternate mode uses a relative set-point for the second zone that is a selected percentage higher than the primary zone's set-point. This mode accounts for the fact that daylight contribution diminishes as the distance from the source (windows) increases. Called "Percentage" operation, this second mode is ideal for classrooms with individually controlled parallel rows of lights. A single shared set-point is used by both modes and can be user programmed or automatically determined by the sensor itself.

Model Numbering System: CM-PC-[DUAL ZONE]-[TEMP/HUMIDITY]

SERIES #	DESCRIPTION	DUAL ZONE	TEMP/HUMIDITY
CM-PC	On/Off Photocell Sensor - Ceiling Mount, Low Voltage	Blank = Single Zone -DZ = Dual Zone	Blank = 14º to 160º F -LT = -40º to 160º F

LIGHT LEVEL SET-POINT

The sensor functions by comparing the amount of daylight available with a defined acceptable lighting level. This threshold, called the set-point, is utilized in all daylight harvesting lighting control decisions. The sensor can find its optimum set-point via the **Automatic Set-Point Programming** mode. In this mode, the sensor sets the minimum light level to be the amount contributed by the artificial lights being controlled. It is assumed that the space is properly lit by design, however, if this is not the case the set-point may be easily adjusted to the occupant's preference. All modes and settings are entered digitally via a push button sequence. Once programmed, the exact value of the set-point (in foot candles) can be read out from the sensor via a series of LED flashes.

DIGITAL SET-POINT CONTROL

Each sensor contains a microcontroller that enables the user to engage the Automatic Set-Point Programming mode or to manually set / adjust the set-point. The manual process involves calculating and inputting the exact foot-candle value of the desired set-point into the sensor. It is important to note that the set-point is the light level required at the face of the sensor and that this value will be much different than the level required at a work surface. Typically, light levels at the ceiling are 3 to 5 times less than the work surface. For example, if 50 fc is desired at the work surface, the sensor should be set at 10 fc. For best results, measure the levels at both locations using a foot-candle meter before programming the set-point.

WIRING INSTRUCTIONS

Wire lead connections are Class II, 18 to 22 AWG.

STANDARD CM-PC

WHITE - Outputs high VAC/VDC (from Brown wire) when sensor calls for Lights "On" (eg. the room is Dark)
BLUE - Outputs high VAC/VDC (from Brown wire) when sensor calls for Lights "Off" (eg. adequate daylight light is present)
RED - 12 to 24 VAC/VDC
BLACK - Common
BRN - Connect to Low Voltage Control input (Red wire on a Power Pack, White wire on an occupancy sensor)

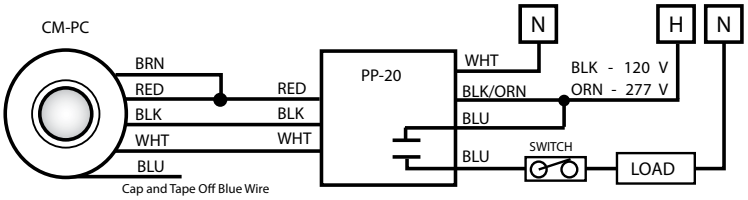

DUAL ZONE OPTION (CM-PC-DZ)

BLUE wire will output high DC when sensor calls for Lights "On" for Zone 2.
(Note: With the -DZ option the SPDT Relay is no longer present and the White wire will output only DC)

WIRING TOGETHER WITH OCCUPANCY SENSORS

Wire upstream occupancy sensor White wire to sensor Brown wire. When the space is unoccupied, the lights stay off regardless of daylight levels. However when occupied, the photocell sensor will control the lights according to daylight level and set-point.

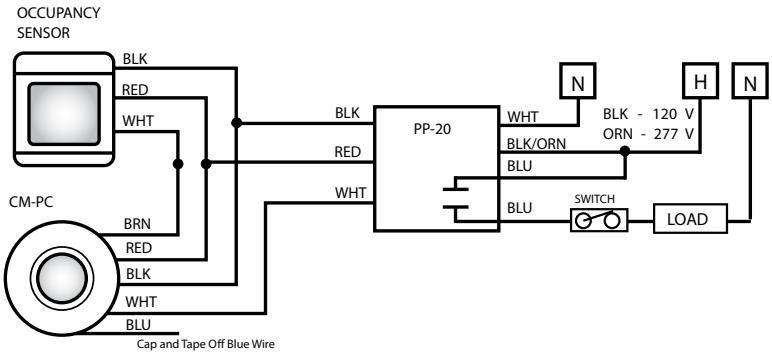

WARRANTY: Sensor Switch, Inc. warrants these products to be free of defects in manufacture and workmanship for a period of sixty months. Sensor Switch, Inc., upon prompt notice of such defect will, at its option, provide a Returned Material Authorization number and a replacement product.
LIMITATIONS AND EXCLUSIONS: This Warranty is in full lieu of all other representation and expressed and implied warranties (including the implied warranties of merchantability and fitness for use) and under no circumstances shall Sensor Switch, Inc. be liable for any incidental or consequential property damages or losses.

sensorswitch
SENSOR SWITCH, INC.
900 Northrop Rd., Wallingford, CT 06492
(203) 265-2842 info@sensorswitch.com
www.sensorswitch.com

Revised 7/10/2006
copyright Sensor Switch, Inc. 2006

sensorswitch

120/277 VOLT POWER PACKS AND SLAVE PACKS

PP-20
PP-20-2P
SP-20
Plenum Rated

Power Packs are the heart of the Low Voltage Sensor System. The *PP-20* transforms 120, 240 or 277 Volts (single phase) to class II 15 VDC to power the remote sensors. Utilizing Patented Relay Circuit Protection the *PP-20* also switches the lighting load "On" and "Off": Tested to over 400,000 cycles at rated load! Although Plenum Rated, the elongated mounting nipple allows for the *PP-20* to be mounted either directly thru a 1/2" inch knockout in a junction box, or to be located inside an adjacent box for specific local code requirements. Up to 14 sensors may be connected to one *PP-20*. Multi-circuit control can be handled by multiple *PP-20's*, or 2-Pole Power Packs (*PP-20-2P*) and Slave Packs (*SP-20*) may be configured. *PP-20's* can be wired continuously hot (line side), or on the switch leg (load side) without nuisance delays upon turn "On".

LOW VOLTAGE OPERATION AND TEST

The Low Voltage Wires or Terminal is color coded Red (15 VDC), Black (Common), and White (Occupancy Signal). With no sensors connected, using a small wire, connect the Red terminal to the White. The lights should turn "On". Remove the connection and the lights should turn "Off". With the sensors connected, the Red and Black wires provide DC power to the remote sensors, and when there is occupancy detected, the White wire produces a 15 VDC signal from the sensor to the power pack initiating the lights to "On". Upon initial power up, the Sensors automatically send an "On" signal until the sensors have stabilized and "Timed Out".

SIZING OF THE SYSTEM - VARIOUS COMBINATIONS

Combining Power Packs provides for additional power to drive remote devices. Maximum numbers of remote sensors are shown below based on the Power Pack/Slave Pack being used. *Maximum number of "Relays" is 30.*

	Sensors	Sensors with Relay
1 PP-20	14	8
1 PP-20-2P	7	6
1 PP-20 w/SP-20	7	6
1 PP-20-2P w/SP-20	5	5
2 PP-20	28	16
2 PP-20-2P	14	12

Note 1: Only three relays may be controlled with one Power Pack. If more than three circuits are required, multiple Power Packs must be used.

Note 2: Only one "Sensor with Relay" is required in most cases. See Technical Datasheet on Low Voltage Sensors with -R Interface Option.

SYSTEMS CONSIDERATIONS

The local override switch may be upstream or downstream of a *PP-20*. However, if an *SP-20* Auxiliary Relay or a *PP-20-2P* controller is being used, the switch(es) should be downstream on the load side of the relay. If power is disconnected to the Power Pack all subsequent relays will open, turning off all of the loads. If wiring the local switches before the Power Pack and Slave Pack, use multiple *PP-20's*, one for each circuit. This will allow for one circuit to remain powered, keeping the system operational when the other is turned off. When controlling a dimming circuit, *PP-20* must be wired before dimmer, or *SP-20* may be wired after dimmer.

INTERFACING WITH ELECTRONIC CONTROL SYSTEMS

The Relay Switching System is designed to switch Alternating Currents Only. The relay will not switch DC signal inputs to EMS or Lighting Control Systems. Use model #MP-20, or "-R" for signal relay located in Low Voltage Sensor Heads.

TYPICAL APPLICATIONS

- Used with Low Voltage Sensors
- Multiple Sensors
- Multiple Loads
- AC Switching Only

HIGHLIGHTS

- Dual Voltage Transformer
- Self-Contained Relay
- Patented Relay Circuit Protection (Tested to over 400,000 cycles)
- Powers up to 14 sensors

SPECIFICATIONS

- Size:(1/2" inch chase nipple not inc.)
  PP-20-2P: $4^1/_8$ x 3" x $1^7/_8$"
  PP-20 & SP-20: 3" x $2^1/_4$" x $1^7/_8$"
- Mounting: 1/2" inch chase nipple
- Operating Voltage: 120, 240, or 277 VAC (Single Phase only)
- Each Relay: 20 Amps
- 1 HP Motor Load
- Output Voltage: 15 VDC, 150 mA at 120 or 277 VAC
- Class II: 18 AWG, up to 2,000 ft.
- Plenum Rated
- Relative Humidity: 20 to 90% non-condensing
- Operating Temp: 14º to 160º F
- Storage Temp: -14º to 160º F
- UL and CUL Listed
- 5 Year Warranty
- Made in U.S.A.

LOW TEMP/HI HUMIDITY(-LT)

- Conformally Coated PCB
- Operates down to -40º F
- Corrosion resistant from moisture

PLENUM CONSIDERATIONS

Most local codes allow for small plastic controls in Return Air Plenums; *Some Do Not!* To meet local code, the Power Pack can be mounted inside an adjacent (Deep) junction box as shown below.

CATALOG INFORMATION

MODEL#	DESCRIPTION	OUTPUT VOLTAGE	OUTPUT CURRENT
PP-20	Power Pack with 20 Amp Relay	15 to 24 VDC	70 to 110 mA
PP-20-2P	Power Pack with two 20 Amp Relays	15 to 24 VDC	35 to 70 mA
SP-20	Slave Pack with 20 Amp Relay	N/A	40 mA (consumption)

**Add suffix -LT for Low Temp/Hi Humidity

TYPICAL WIRING DIAGRAMS - DO NOT WIRE HOT

NOTE: The Power Pack must be connected to a single phase Hot and Neutral System. For 120 VAC, connect the Black wire to Hot, White wire to Neutral, and Cap off the Orange wire. For 240-277 VAC, connect the Orange to Hot, White to Neutral, and Cap off the Black wire. *Never connect both the Black and Orange wires!* Low Voltage wire can be 18 to 22 AWG; shielding is not necessary. Class II terminal Block on *PP-20-2P* only accepts one conductor per terminal of 18 AWG stranded or smaller.

Multiple Sensors Controlling One Circuit

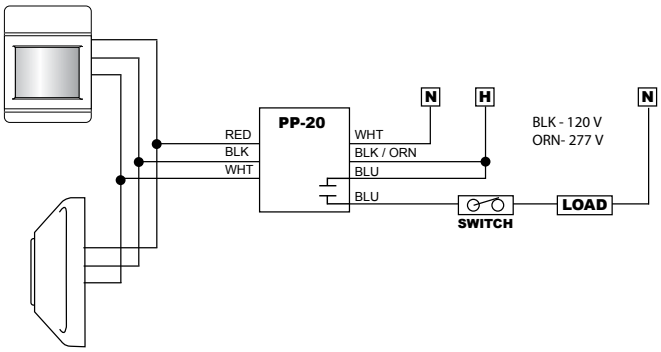

Multiple Sensors Controlling Two Circuits

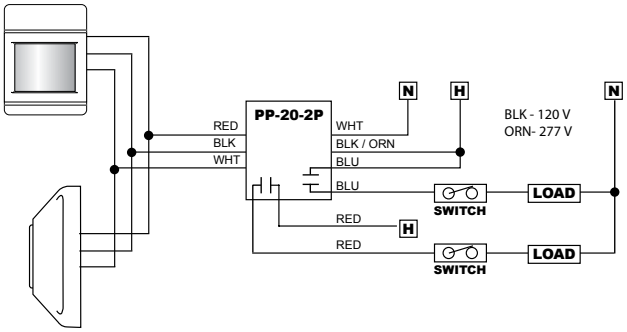

Multiple Sensors Controlling Three Circuits

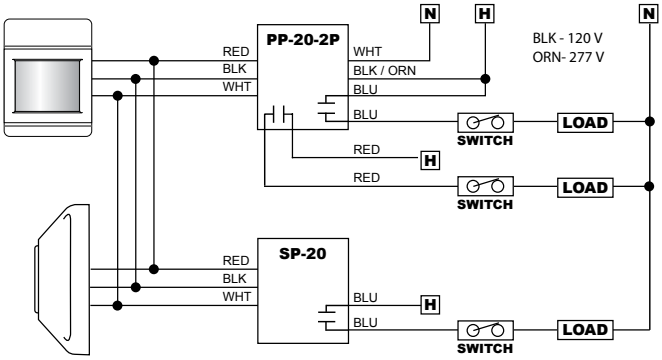

Multiple Sensors Controlling Four Circuits

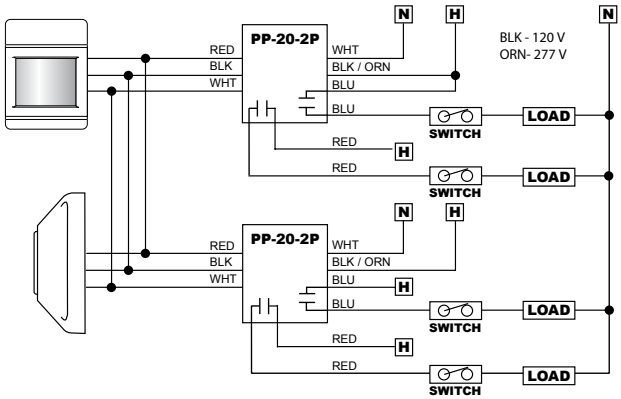

Wiring Multiple Power Packs Together

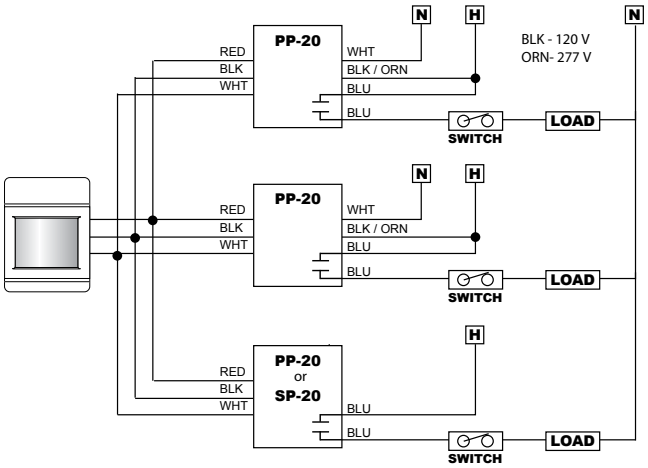

One Sensor Controlling Two Circuits

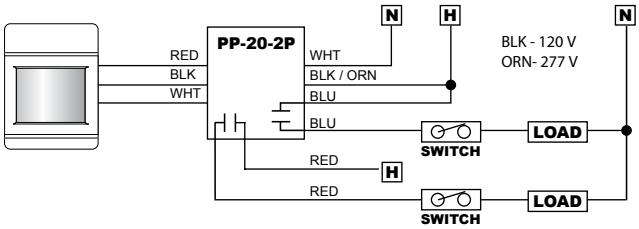

One Sensor Controlling One Circuit

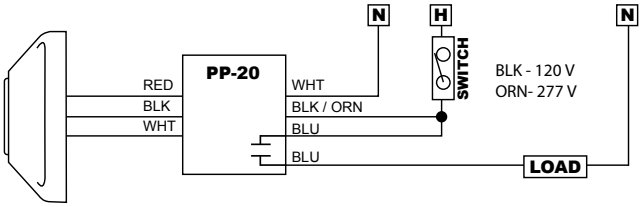

WARRANTY: Sensor Switch, Inc. warrants these products to be free of defects in manufacture and workmanship for a period of sixty months. Sensor Switch, Inc., upon prompt notice of such defect will, at its option, provide a Returned Material Authorization number and repair or replace returned product.

LIMITATIONS AND EXCLUSIONS: This Warranty is in full lieu of all other representation and expressed and implied warranties (including the implied warranties of merchantability and fitness for use) and under no circumstances shall Sensor Switch, Inc. be liable for any incidental or consequential property damages or losses.

sensorswitch

SENSOR SWITCH, INC.
900 Northrop Rd., Wallingford, CT 06492
(203) 265-2842 info@sensorswitch.com
www.sensorswitch.com

revised 09/06/2007
copyright Sensor Switch, Inc. 2007

LED

Incandescent-to-LED-Relamping Energy Cost Savings Calculation Results:

LEDtronics Incandescent Replacement LED Lamp Saving Form

Calculated Estimated Savings*

Lighting System		Present Lamp Used	LEDtronics LED Replacement Part #
Lamp Life (Hours)	A	5000	60000
Lamp Price $	B	150	995
Lamp Wattage (Watt)	C	400	147
Lamp Part Number		xxxxxxx	SLL003P-70x2W-XPW-005
Annual Operating Hours	D	6570	
Labor $ Hourly Rate	E	25	
Rate Charged for per kWh $	F	.11	
Total Number of Lamps in Use	G	2	
Annual System Operating Costs			
Lamps (BxD÷A)G	H	$394.20	$217.91
Labor (ExD÷A)G	I	$65.70	$5.48
Electricity (CxDxFxG)/1000	J	$578.16	$212.47
Total H+I+J	K	$1,038.06	$435.85
Estimated Savings with LEDtronics LED Lamps			
Annual Savings K1-K2=L	L	$602.21	
Simple Payback (B2-B1)xG÷L	M	2.81 years	
Return on Investment L/[(B2-B1)xG]x100%	N	35.63%	
Energy $ Saved Over Lamp Life (J1-J2)xA2÷D	O	$3,339.60	
Savings Over Lamp Life LxA2÷D	P	$5,499.60	
Additional Notes			

Form Prepared by: Janelle Mika
Company: Mika Sales CO.
Phone: 630-243-0412 Email: janemika@mikasales.com Date: 3/3/2010 8:58:01 AM

* Savings may vary depending on application, fixture and burning position. Stated wattage are approximate.Actual lamp wattage may vary depending on design and manufacturing tolerances.

LED Outdoor Area Lighting

LITHONIA LIGHTING

- 120-277V
- Rated avg. life: 50,000 hrs.
- Temp. range: 0° to 40°C
- Color temp.: 5100K
- CRI: 70

ro ides an energy sa ing and long li e solution in lig ting entry dri es par ing lots and al - ays uita le or aria le ounting eig ts up to t crylic lens ousing is die-cast alu inu dar ro n uare pole ounting -year arranty l rated isted or et locations

ALX1

Lamp Watts	Lumens	Lumens Per Watt	Replaces	Light Distribution	Mfr. Model	Item No.	$ Each
			M	ype III sy etric	R M O	4ZCZ9	1325.00
			M	ype y etric	R M O	4ZDA1	1325.00
			M	ype III sy etric	R M O	4ZDA2	2325.00
			M	ype y etric	R M O	4ZDA3	2325.00

LED Evolve® Outdoor Area Lighting

GE Lighting

- 120-277V
- Rated avg. life: 50,000 hrs.
- Temp. range: -40° to 50°F
- Color temp.: 5100K
- CRI: 70
- Integral surge protection
- IEE/ANSI Rated

ig ts a e a eat sin to elp ensure a i u eat trans er and long li e olycar onate lens ousing is corrosion-resistant polyester dar ro n po der-coated inis l rated isted or et locations uita le or ounting eig ts up to t ote dditional con igurations a aila le on grainger co

Lamp Watts	Lumens	Lumens Per Watt	Replaces	Mounting	Light Distribution	Housing Finish	Mfr. Model	Item No.	$ Each
Area Lights									
			M	uare Round ole	ype	ar ron e		4XER8	2555.00
			M	uare Round ole	ype III	ar ron e		4ZWU3	2117.00
			M	uare Round ole	ype I	ar ron e		4ZWU4	1809.00
			M	uare Round ole	ype I	ar ron e	R	4ZWU5	1809.00
			M	uare Round ole	ype I	ar ron e		4ZWU6	1809.00
Pole Adapters									
				uare ole		lac	- M	4ZWY4	78.25
				uare ole		ar ron e	- M	4ZWY5	78.25
				Round ole		ar ron e	R - M	4ZWY7	78.25

LED Emergency Lighting

LITHONIA LIGHTING

i d attery pro ides in o ac up po er a ter po er loss Includes ready la p c arge status indicator and test s itc Meets - and O illu ination stan- dards -year arranty

EMERGENCY LIGHT

uic Mount eature allo s ceiling or all ount o is ig output

COMBO EMERGENCY/EXIT

uita le or a o e-t e-door applications and ot er tig t spaces - ig letters it - ide stro e noc out c e rons or c oice o direction ni ersal ounting ount top end or ac o is ig output OM erti ied

Emergency Light

Input Voltage	Watts @ 90 min.	Lamp Watts	Output Volts (DC)	Dim. (in.) L	W	H	Housing Finish	Housing Material	Mfr. Model	Item No.	$ Each
Emergency Light											
							ite	er oplastic	M	4ZDA4	88.00
	or it Re ote ead onnected						ite	er oplastic	M O	4ZDA5	106.40

Input Voltage	Fixture Wattage	Dim. (in.) D	W	H	No. of Sides	Housing Material	Housing Finish	Letter Color	Mfr. Model	Item No.	$ Each
Combo Emergency/Exit											
						er oplastic	ite	Red	M R	4ZDA6	178.75
						er oplastic	ite	Red	M R O	4ZDA7	197.50
						er oplastic	ite	reen	M	4ZDA8	203.75

Emergency Light/ Exit Sign Combo

LED Open Sign

LITHONIA LIGHTING

- Rated avg. life: 80,000 hrs.

nergy-e icient alternati e to neon lig ts Red and lue lig ts can e set to static or las ing lig ts it c asing lin ing aria le speed ousing is lac plastic acrylic lens Includes la p and - t po er cord asily ad ust sign eig t it included long ounting c ain - isted

Fixture Wattage	Voltage	Ambient Temp. Range (°F)	Dim. (in.) L	H	W	Mfr. Model	Item No.	$ Each
		to				O M	4EAG9	119.00

LED Dock Light

fostoria Quality Since 1917

LED DOCK LIGHT

- Rated avg. life: 50,000 hrs.

oc lig t as a dual ar design t at allo s ar to o e ori ontally on t e all rac et ori ontally on t e center oint and ertically on t e outer ar center oint On O toggle s itc ig t ead is spun alu inu ello po der-coated inis - t po er cord all ounting rac et is - t ic and as ounting oles t at accept olts (not included) ig t ead asse - ly o includes yo e la p On O s itc po er cord and lig t guard

No. 4KFT2

Lamp Wattage	No. of Arms	Total Arm Length (in.)	Mfr. Model	Item No.	$ Each
Dock Light					
			- -	4KFT2	364.50
Lighthead Only					
			-	4KFT3	305.75

QUICKTRONIC® PROStart® T5HO UNIVERSAL High Ambient Temp.

<10% THD Electronic T5HO Fluorescent Programmed Rapid Start Ballasts

Professional Series

Normal Light Output

Lamp/Ballast Guide

54W T5 - PENTRON® HO
1 or 2 lamp
QTP2x54T5HO/UNV PSN HT
QTP4x54T5HO/UNV PSN HT W

3 or 4 lamp
QTP4x54T5HO/UNV PSN HT W

Also operates:
FT55DL, FPC55, L58

Four lamp switchable model can be wired for four, three, two or one lamp operation.

Two lamp fixed output model can be wired for one lamp operation.

Key System Features

- 90°C maximum case temp.
- Universal voltage (120-277)
- Low-profile (1.00" High)
- 100% Ballast factor
- QUICKSENSE ballast technology (end-of-lamp-life sensing)
- PROStart programmed start
- Occupancy sensor applications
- UL type CC rated
- **-20°F Starting**
- Operates at >40 Khz to reduce potential interference with infrared control systems
- High power factor
- Low harmonic distortion
- Lightweight
- UL, CSA, FCC

Application Information

SYLVANIA QUICKTRONIC PHO
is ideally suited for:

- Industrial high-bay
- Commercial
- Retail
- Hospitality
- Institutional
- New construction
- Direct lighting
- Indirect lighting
- Surface mount
- Cove lighting

SYLVANIA QUICKTRONIC HIGH AMBIENT (HT) PHO operates PENTRON HO, PENTRON HO Circline, and DULUX® L T5 lamps with full lumen output and optimal system performance.

SYSTEM PHO High Ambient Temperature ballasts are specifically designed for applications where the ballast is subjected to higher ambient temperatures, as in high bay industrial installations. The four lamp UNV (120-277V) ballast system provides 18,600 mean lumens, which, when factoring in lumen maintenance and typical T5HO fixture efficiency, can be considered as a direct replacement for standard 400W MH. As such, the family is ideally suited to replace 250W and 400W metal halide installations.

Unique to the family is the 120-277V 4-lamp "switching" ballast, designed to switch from 4- to 3-, 3- to 2-, 3- to 1- or 2- to 1-lamps. The switching feature can be accessed through a second input power terminal. This feature allows for a range of control interfaces, including an occupancy sensor, mounted inside a fixture.

SYSTEM PHO HT ballasts contain QUICKSENSE® ballast technology, a patented circuitry designed to shut down the system reliably and safely when lamps reach end-of-life.

Setting the standard for quality, SYSTEM PHO HT is also covered by our QUICK 60+® warranty, the first and most comprehensive system warranty in the industry.

SYSTEM PHO HT is available in four and two lamp models to cover a wide range of applications.

System Information

SYSTEM PHO HT operates on 120V through 277V, 50 or 60Hz current, eliminating "wrong voltage" wiring errors and reducing the number of ballast models in inventory by half.

PROStart ballasts provide optimum starting conditions and provide up to 100,000 switching cycles for use on occupancy sensors and building control systems.

QUICKSENSE ballast technology helps to protect against overheated bases and sockets, as well as cracking of the lamp glass wall, and uses dynamic end-of-lamp-life sensing to avoid false shutdowns caused by some static sensing methods. QUICKSENSE ballast technology will auto reset when spent lamps are replaced with new ones.

The four lamp unit can be wired for four, three, two or one lamp operation. The two lamp unit can be wired for one lamp operation, allowing for an additional 50% reduction in inventory model numbers.

System Type	Input Wattage	Initial Lumens	System LPW
F40T12 - E.S. Magnetic Ballast (4-lamp)	172	11590	67
F34T12 - E.S. Magnetic Ballast (4-lamp)	144	9500	66
F032T8/XP - QT4x32IS (4-lamp)	114	10800	95
FP54T5 - QTP2x54T5HO/UNV PSN HT (2-lamp)	121	10000	83
FP54T5 - QTP4x54T5HO/UNV PSN HTW (4-lamp)	241	20000	83

SYSTEM PHO HT has a 25.4H (mm) profile. PENTRON T5 lamps are designed to provide peak performance at 35°C fixture ambient, allowing for smaller and more innovative fixtures.

SEE THE WORLD IN A NEW LIGHT SYLVANIA

PROStart® T5HO UNV HIGH TEMP.
Fixed Output & Switchable

<10% THD Electronic T5 HO High Ambient Fluorescent Systems

Performance Guide

Item Number	Description	Input Voltage (VAC)	Input Current (AMPS)	Lamp[1] Type	Rated[2,3] Lumens (lm)	No. of Lamps	Ballast[3] Factor (BF)	System[3] Lumens	Input[3] Power (Watts)	System Efficacy (lm/W)
QTP 2x54 T5HO Fixed Output BF 1.0										
49136	QTP 2x54T5HO/UNV PSN HT	120-277	1.00/0.43	FP54T5HO	5000	2	1.00	10000	121/118	83/85
*(49135)**						1	1.00	5000	61	82
QTP 4x54 T5HO Switchable Model										
49161	QTP 4x54T5HO/UNV PSN HTW	120-277	2.00/0.85	FP54T5HO	5000	4	1.00	20000	241/236	83/85
*(49160)***						3	1.00	15000	182/178	83/85
						2	1.00	10000	121/118	83/85
						1	1.00	5000	61	82

1 Also compatible with other manufacturer's equivalent lamp types that meet ANSI standards.
2 Rated lamp lumens and performance data based on PENTRON® HO lamps.
3 At 35°C lamp ambient temperature.
*(49135) QTP 2x54T5HO/UNV PSN HT: same as 49136, with leads.
**(49160) QTP 4x54T5HO/UNV PSN HTW: same as 49161, with leads.

Installation Notes

Switching: Simultaneously disconnect all ungrounded line conductors.
Install in accordance with National & Local Electric Code. Ground ballast case.

Dimensions:
Model QTP2x54 T5HO/UNV PSN HT enclosure size:
Overall: 16.73"L x 1.18"W x 1.0"H (425mm L x 30mm W x 25.4mm H)
Mounting: 16.34" (415mm)

Wiring:
Push-in connectors (no leads provided)
Use 18AWG solid copper wire only
See page 44 for wiring diagram.

Packaging:
Quantity: 20 (2-lamp)
Weight: 2L: 0.88 lbs each (approx)

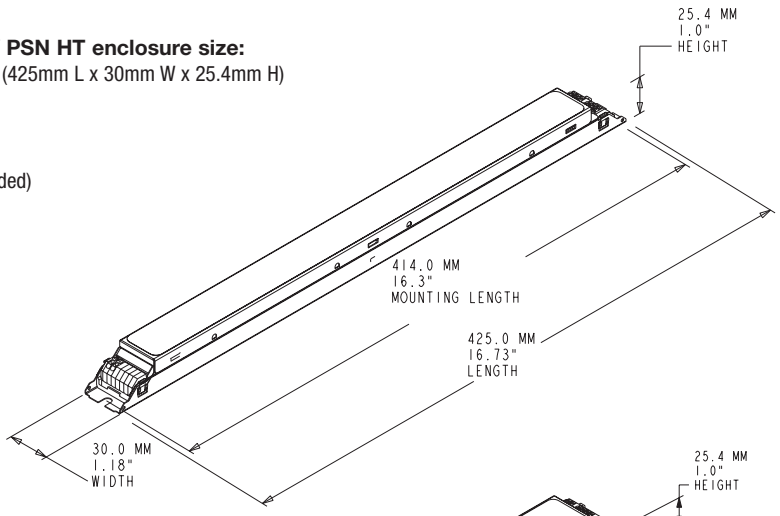

Dimensions:
Model QTP4x54 T5HO/UNV PSN HT W enclosure size:
Overall: 16.73"L x 2.32"W x 1.0"H (425mm L x 59mm W x 25.4mm H)
Mounting: 16.34" (415mm)

Wiring:
Push-in connectors (no leads provided)
Use 18AWG solid copper wire only
See page 45 for wiring diagram.

Packaging:
Quantity: 2-Lamp: 20 (no leads)
10 (with leads)
4-Lamp: 10 (leaded and non-leaded)
Weight: 2L: 0.88 lbs, 0.40kg each (approx)
4L: 1.68 lbs, 0.76kg each (approx)

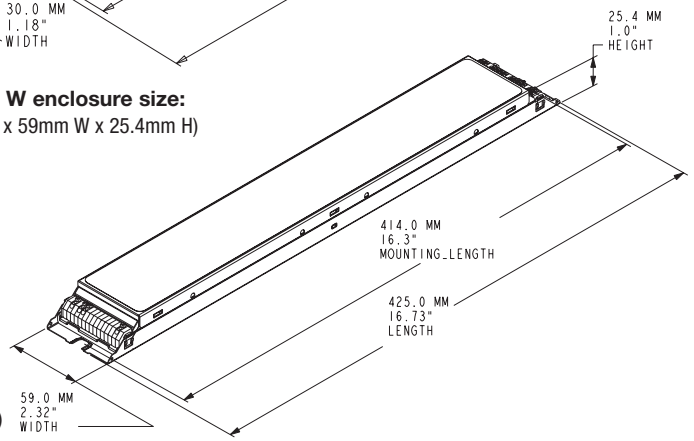

Specifications[4]

Starting Method: Programmed Start
Ballast Factor: 1.00
Circuit Type: Series
Lamp Frequency: > 40 KHz
Lamp CCF: Less than 1.6
Starting Temp: **-20°F minimum**[5]
Input Frequency: 50/60 Hz
Low THD: < 10%
Power Factor: > 98%
Voltage Range: +/–10% of Rated Input

UL Listed Class P, Type 1, Outdoor, Type CC
CSA Certified
High Ambient Applications:
90°C Max. Case Temp. **(3 yr. warranty)**
Standard Ambient Applications:
70°C Max. Case Temp. **(5 yr. warranty)**
FCC 47CFR Part 18 Non-Consumer Class A Sound Rating
ANSI C62.41 Cat. A Transient Protection
Dynamic End-of-Lamp-Life Sensing
Remote Mounting up to 18 feet[5]

4 Data based on PENTRON HO lamp types for primary ballast application.

5 Operation below 50°F may affect light output or lamp operation – see "Low Temp. Starting" definition. Remote red and brown leads up to 18 feet. Keep blue and yellow (for 4-lamp model only) leads <10 feet.

System Life / Warranty

QUICKTRONIC® products are covered by our QUICK 60+® warranty, a comprehensive lamp and ballast system warranty. For additional details, refer to our QUICK 60+ warranty bulletin.

Ordering Guide

Specifications subject to change without notice.

Item Number — **49161 QTP 4 x 54 T5HO/UNV PSN HTW** — High Ambient Temperature (Case)
QUICKTRONIC PROFESSIONAL — Starting/Ballast Factor
Number of Lamps — Line Voltage (120-277V)
Primary Lamp Wattage

All registered trademarks property of OSRAM SYLVANIA, Inc.
DULUX and QUICKTRONIC are registered trademarks of OSRAM GmbH used under license. SYLVANIA is a registered trademark of OSRAM SYLVANIA, Inc.

©2007 OSRAM SYLVANIA

OSRAM SYLVANIA National Customer Service and Sales Center
1-800-LIGHTBULB (1-800-544-4828)
www.sylvania.com

the system solution®

2 LAMP T5HO UNV HT
Fixed Output Ballast

<10% THD Electronic 2 Lamp T5HO High Ambient Fluorescent Systems

Lamp/Ballast Guide

Installation Notes

- Install in accordance with National & Local Electric Code
- Ground ballast case
- Switching: Simultaneously disconnect all ungrounded line conductors

Specifications

Refer to the last page of this Product Information Bulletin for full detail specifications.

New high ambient model (90°C case temp.)
49136 QTP 2x54T5HO/UNV PSN HT

Wiring diagram for 2-Lamp model

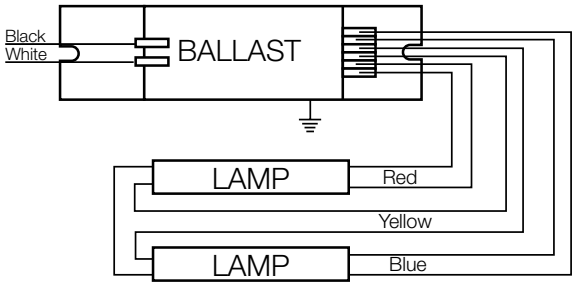

2 LAMP

2-Lamp model can be wired for one lamp operation.

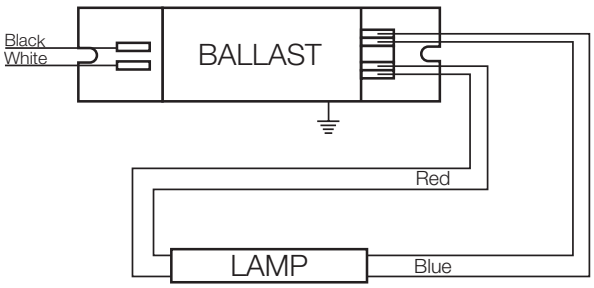

1 LAMP

Ordering Guide

49136 QTP 2 x 54 T5HO/UNV PSN HT

- Item Number — 49136
- QUICKTRONIC PROFESSIONAL — QTP
- Number of Lamps (1, 2) — 2
- Primary Lamp Wattage — 54
- Line Voltage (120-277V) — T5HO/UNV
- Starting/Ballast Factor — PSN
- High Ambient Temperature — HT

4 LAMP T5HO UNV HT
Switchable Ballast

<10% THD Electronic 4 Lamp T5HO High Ambient Fluorescent Systems

4-Lamp Switching Wiring Diagram (4L to 2L)

S1 (Output A)	S2 (Output B)	Lamp Control
Closed (ON)	Closed (ON)	All 4 Lamps ON (Output A&B ON)
Closed (ON)	Open (OFF)	2 Lamps ON (Output A ON)
Open (OFF)	Closed (ON)	2 Lamps ON (Output B ON)
Open (OFF)	Open (OFF)	All Lamps OFF

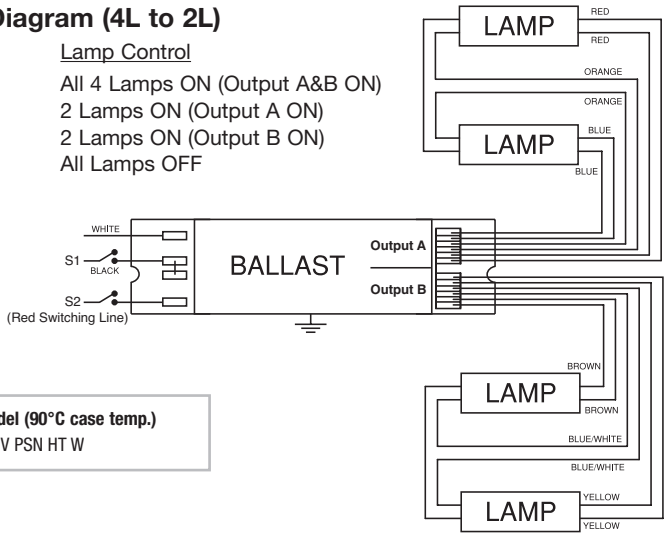

New high ambient switchable model (90°C case temp.)
49161 QTP 4x54T5HO/UNV PSN HT W

3-Lamp Switching Wiring Diagram (3L to 2L, 3L to 1L)

S1 (Output A)	S2 (Output B)	Lamp Control
Closed (ON)	Closed (ON)	All 3 Lamps ON (Output A&B ON)
Closed (ON)	Open (OFF)	2 Lamps ON (Output A ON)
Open (OFF)	Closed (ON)	1 Lamp ON (Output B ON)
Open (OFF)	Open (OFF)	All Lamps OFF

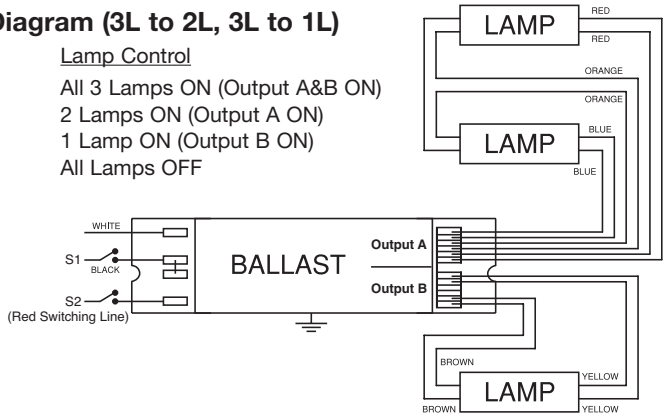

2-Lamp Switching Wiring Diagram (2L to 1L)

S1 (Output A)	S2 (Output B)	Lamp Control
Closed (ON)	Closed (ON)	2 Lamps ON (Output A&B ON)
Closed (ON)	Open (OFF)	1 Lamp ON (Output A ON)
Open (OFF)	Closed (ON)	1 Lamp ON (Output B ON)
Open (OFF)	Open (OFF)	All Lamps OFF

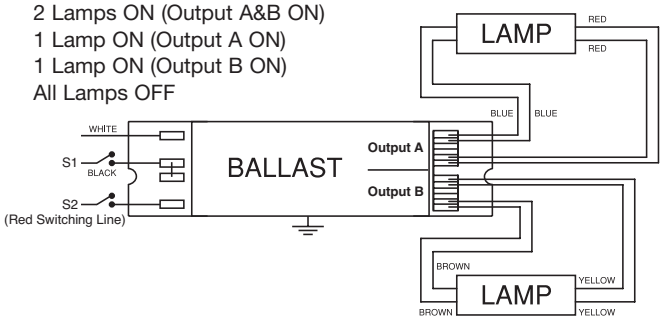

Item Number — **49161 QTP 4 x 54 T5HO/UNV PSN HTW**
- QUICKTRONIC PROFESSIONAL
- Number of Lamps
- High Ambient Temperature (Case)
- Starting/Ballast Factor
- Line Voltage (120-277V)
- Primary Lamp Wattage

Switching Schematics

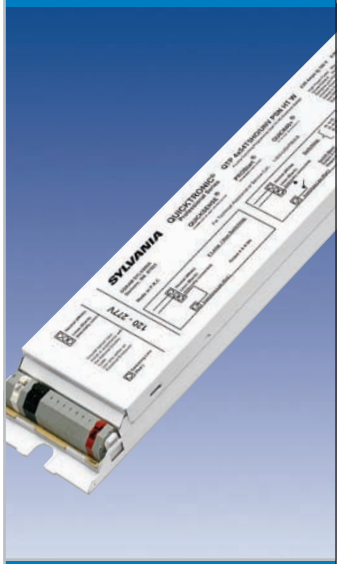

Installation Notes

- Install in accordance with National & Local Electric Code
- Ground ballast case
- Switching: Simultaneously disconnect all ungrounded line conductors
- The AC line inputs must be connected to the same phase of the line voltage
- DO NOT CONNECT two separate phases of line voltage to the input of the ballast

Input wiring for non-switching operation
(Install jumper between black & red switching line terminals)

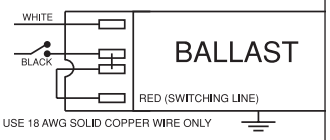

Input wiring for occupancy sensors
(Install occupancy sensor/switch between black & red line terminals)

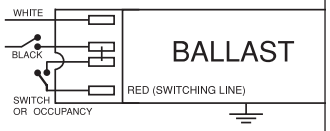

<10% THD Electronic T5HO Fluorescent Programmed Rapid Start Systems

QUICKTRONIC PROStart® T5HO 0.80BF UNIVERSAL BALLAST

0.80BF Professional and QUICKSTEP® Series

Lamp/Ballast Guide

54W T5HO - PENTRON®
2-lamp:
QTP2x54T5HO/UNVPS80SC
QS2x54T5HO/UNVPS80SC

Key System Features

- Universal voltage (120-277)
- QUICKSTEP Stepped Switching bi-level light output
- QUICKSENSE® ballast technology (end-of-lamp-life sensing)
- PROStart programmed start
- Suitable for use with occupancy sensors
- Operates at >40 Khz to reduce potential interference with infrared control systems
- High power factor (>98%)
- <10% THD total harmonic distortion at full power
- UL, CSA, FCC
- Small Can Enclosure

Application Information

SYLVANIA QUICKTRONIC T5HO Ballasts
are ideally suited for:

- Office
- Schools
- Commercial
- Retail
- Hospitality
- Institutional
- New construction
- Renovations

The SYLVANIA QUICKTRONIC T5HO 0.80BF ballasts operate PENTRON T5HO ECOLOGIC lamps. The ballast is tuned to provide a unique 0.80 ballast factor, providing 20% energy savings over conventional 2 lamp 54W T5HO systems. The system includes SYLVANIA's new line of QUICKSTEP stepped switching ballasts. QUICKSTEP ballasts are specially designed to meet California Energy Commission's Title 24 requirements for multi-level lighting controls (Section 131). The combined lamp and ballast system offers high performance features that are standard on SYLVANIA's Professional Series of ballasts.

QUICKTRONIC T5HO ballasts contain QUICKSENSE ballast technology, a patented circuitry designed to shut down the system reliably and safely when lamps reach end-of-life.

Setting the standard for quality, PENTRON Systems are also covered by our QUICK 60+® warranty, the first and most comprehensive system warranty in the industry.

QUICKTRONIC 0.80BF T5HO is available as a two-lamp model in either a Professional or QUICKSTEP version, to cover a wide range of applications.

System Information

QUICKTRONIC 0.80BF T5HO Systems operate from 120V through 277V, 50 or 60Hz, eliminating "wrong voltage" wiring errors and reducing the number of models in inventory by half.

The QUICKSTEP system has two AC line inputs in addition to the neutral wire. These AC line inputs must be connected to the same phase of the line voltage. The two line inputs can be configured to provide a bi-level light output system by wiring the system with two switches. Each switch provides 50% power to the ballast. When both switches are on, the lamps operate at full light output.

System Comparisons	Input Wattage	Initial Lumens	System LPW
QS2x54T5HO/UNV PS80SC - FP54T5HO (2 lamp)	96	8000	83
QTP2x54T5HO/UNV PSN - FP54T5HO (2 lamp)	121	10,000	83
F32T8- 3 lamp Instant Start Electronic	88	7525	86

When either switch is off, the lamps operate in a dimmed mode and the ballast factor is reduced by 50%. In addition, system power is reduced to levels that are compliant with Section 131b-California Title 24.

Alternatively, QUICKSTEP ballasts can be controlled by occupancy sensors allowing for customized zone controls and various energy saving configurations.

PROStart ballasts deliver optimum starting conditions to provide up to 100,000 switching cycles for use on occupancy sensors and building control systems.

QUICKSENSE ballast technology helps to protect against overheated bases and sockets, as well as cracking of the glass wall, and uses dynamic end-of-lamp-life sensing to avoid false shutdowns caused by some static sensing methods. QUICKSENSE ballast technology will auto reset when the end-of-life lamps are replaced with new ones.

SEE THE WORLD IN A NEW LIGHT SYLVANIA

QUICKTRONIC PROStart® T5HO UNV

BF0.80 Professional & QUICKSTEP® Bi-level Ballast

<10% THD Electronic 0.80BF T5HO Programmed Rapid Start Systems

NAED Number	Description	Input Voltage (VAC)	Input Current (AMPS)	Lamp Type	Rated[1,2] Lumens (lm)	No. of Lamps	Ballast[2] Factor (BF)	System[2] Lumens	Input[2] Power (Watts)	System Efficacy (lm/W)
QTP Fixed Output BF0.80										
49418	QTP 2x54T5HO/UNV PS80SC	120-277	0.80/0.34	FP54T5HO	5000	2	0.80	8000	96/93	83/86
QUICKSTEP Bi-Level Switchable Model										
49419	QS 2x54T5HO/UNV PS80SC	120-277	0.80/0.34	FP54T5HO	5000	2	0.80	8000	96/93	83/86
			0.44/0.19	FP54T5HO	5000	2	0.40	4000	52/51	77/78

1 Rated lamp lumens and performance data based on PENTRON T5HO lamps.
2 At 35°C lamp ambient temperature.

Performance Guide

Rated lamp lumens and performance data based on PENTRON T5HO lamps.

Installation Notes

- Install in accordance with National & Local Electric Code
- Ground ballast case
- For QUICKSTEP ballasts, the AC line inputs must be connected to the same phase of the line voltage
- **DO NOT CONNECT** two separate phases of line voltage to the input of QUICKSTEP ballasts, the ballast will be damaged and not covered by warranty

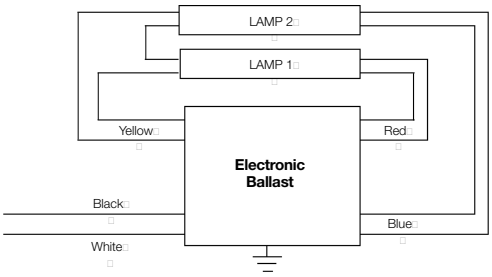

2-Lamp QTP
Fixed output only

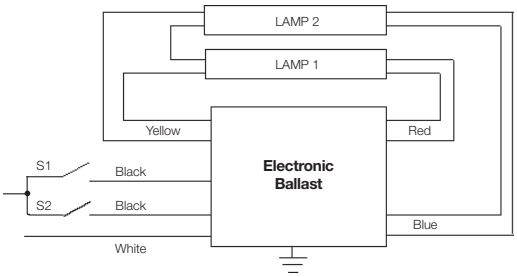

2-Lamp QS (QUICKSTEP)

Full light output (full power)	S1 & S2 closed (on)
Bi-level mode	S1 or S2 open (off)

Specifications

Starting Method: Programmed Start
Circuit Type: Series
Lamp Frequency: > 40 KHz
Lamp CCF: Less than 1.7
Starting Temp: 32°F (0°C) minimum
Input Frequency: 50/60 Hz
Low THD: < 10% (Full power)
<20% THD (@50% power)
Power Factor: > 98% (Full power)
Voltage Range: +/–10% of Rated Input

UL Listed Class P, Type 1, Outdoor, CSA Certified
70°C Max Case Temperature
FCC 47CFR Part 18 Non-Consumer
Class A+ Sound Rating
ANSI C62.41 Cat. A Transient Protection
Dynamic End-of-Lamp-Life Sensing
Remote Mounting up to 10 feet

Dimensions:
Small Can (SC) enclosure size:
Overall: 9.5" L x 1.68" W x 1.18" H
Mounting: 8.90"

Wiring:
Leads only

Packaging:
Quantity: 10 pcs
Weight: 1.6 lbs each (approx)

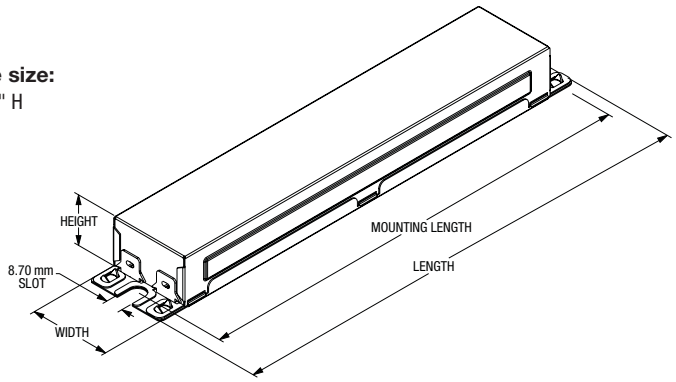

System Life / Warranty

QUICKTRONIC products are covered by our QUICK 60+® warranty, a comprehensive lamp and ballast system warranty. For additional details, refer to our QUICK 60+® warranty bulletin.

Ordering Guide

Specifications subject to change without notice.

Item Number — **49419 QS 2 x 54 T5HO/UNV PS80 SC** — System Type - DIMMING/Case Size
QUICKSTEP — Line Voltage (120V to 277V)
Number of Lamps — Primary Lamp Wattage

All registered trademarks property of OSRAM SYLVANIA. SYLVANIA is a registered trademark of OSRAM SYLVANIA. QUICKTRONIC is a registered trademark of OSRAM GmbH.

©2008 OSRAM SYLVANIA

OSRAM SYLVANIA National Customer Service and Sales Center
1-800-LIGHTBULB (1-800-544-4828)
www.sylvania.com

the system solution®

NEMA Premium Efficiency Motor Cost Data

Product Overview: VHECP4110T

* Click for Larger Image

Catalog Number: VHECP4110T
Description: 40HP,1775RPM,3PH,60HZ,324HP,1260M,TEFC
Ship Weight: 670 lbs.
List Price: $6,178
Multiplier Symbol: SD

View Specifications | View Operation Manual

FEATURES

- Corrosion resistant epoxy finish
- Cast iron construction
- Designed for vertical mounting
- Rotatable conduit box
- Stainless steel nameplates
- Shaft seals
- Energy efficient windings
- Two lifting lugs

APPLICATIONS

For medium and high thrust in-line pump applications. Waste water treatment plants, petro chemical industries, pulp and paper mills and agricultural irrigation applications.

NEMA Premium

* The image shown is representative only. Actual product may differ in appearance from image shown.

Product Overview: VHECP4115T

* Click for Larger Image

Catalog Number: VHECP4115T
Description: 50HP,1775RPM,3PH,60HZ,326HP,1266M,TEFC
Ship Weight: 717 lbs.
List Price: $8,728
Multiplier Symbol: SD

View Specifications | View Operation Manual

FEATURES

- Corrosion resistant epoxy finish
- Cast iron construction
- Designed for vertical mounting
- Rotatable conduit box
- Stainless steel nameplates
- Shaft seals
- Energy efficient windings
- Two lifting lugs

APPLICATIONS

For medium and high thrust in-line pump applications. Waste water treatment plants, petro chemical industries, pulp and paper mills and agricultural irrigation applications.

NEMA Premium

* The image shown is representative only. Actual product may differ in appearance from image shown.

Product Overview: VHECP4314T

* Click for Larger Image

Catalog Number: VHECP4314T
Description: 60HP,1780RPM,3PH,60HZ,364HP,1462M,TEFC
Ship Weight: 885 lbs.
List Price: $10,797
Multiplier Symbol: SD

View Specifications | View Operation Manual

FEATURES

- Corrosion resistant epoxy finish
- Cast iron construction
- Designed for vertical mounting
- Rotatable conduit box
- Stainless steel nameplates
- Shaft seals
- Energy efficient windings
- Two lifting lugs

APPLICATIONS

For medium and high thrust in-line pump applications. Waste water treatment plants, petro chemical industries, pulp and paper mills and agricultural irrigation applications.

NEMA Premium

* The image shown is representative only. Actual product may differ in appearance from image shown.

Product Overview: VHECP4316T

* Click for Larger Image

Catalog Number: VHECP4316T
Description: 75HP,1780RPM,3PH,60HZ,365HP,1482M,TEFC
Ship Weight: 973 lbs.
List Price: $13,149
Multiplier Symbol: SD

View Specifications | View Operation Manual

FEATURES

- Corrosion resistant epoxy finish
- Cast iron construction
- Designed for vertical mounting
- Rotatable conduit box
- Stainless steel nameplates
- Shaft seals
- Energy efficient windings
- Two lifting lugs

APPLICATIONS

For medium and high thrust in-line pump applications. Waste water treatment plants, petro chemical industries, pulp and paper mills and agricultural irrigation applications.

NEMA Premium

* The image shown is representative only. Actual product may differ in appearance from image shown.

Product Overview: ECP84410T-5

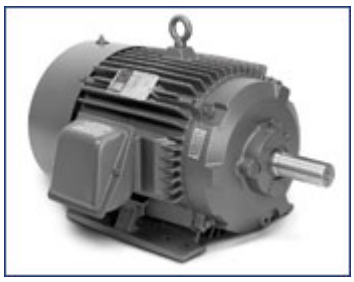

* Click for Larger Image

Catalog Number: ECP84410T-5
Description: 125HP,1780RPM,3PH,60HZ,444T,1876M,TEFC,F
Ship Weight: 1784 lbs.
List Price: $15,329
Multiplier Symbol: SD

View Specifications | View Operation Manual

FEATURES

- 1.15 Service Factor
- Corrosion resistant epoxy finish
- Regreasable ball bearings
- Oversized rotatable cast iron conduit box
- Forsheda® shaft seal
- Moisture resistant copper windings
- Class F insulation
- Stainless steel nameplate and corrosion resistant hardware
- Tropicalized

APPLICATIONS

Typical applications include petro-chemical plants, mines, foundries, pulp and paper plants, waste management facilities, chemical plants, tropical climates and other processing industry applications requiring protection against corrosion caused by severe environmental operationg conditions.

NEMA Premium

* The image shown is representative only. Actual product may differ in appearance from image shown.

Space Heating Boiler

Form No. 1930
(04/05)

Bryan "Flexible Water Tube"

CLM Series Steam & Water Boilers

1,200,000 to 3,000,000 BTUH
Forced draft gas, oil or dual fuel fired

Steam Boiler
CLM-180-S150-FDGO

Water Boiler
CLM-300-W-FDG

BRYAN® BOILERS

Originators of the "Flexible Water Tube" design

High efficiency hot water and steam boilers for commercial and industrial applications

Bryan flexible tube boilers are ideally suited for both hot water and steam space heating systems as well as either high or low pressure process steam. In a range of sizes from 1,200,000 to 3,000,000 BTUH input, Bryan CLM series flexible tube boilers are ideal for many commercial, institutional and industrial applications. These include healthcare facilities; schools; apartments; churches; office buildings; correctional facilities; airports; sewage treatment plants; golf, tennis and fitness clubs. Hospitals, dairies, restaurants, laundries, dry cleaners, food processing, tire recapping and metal plating are just a few of the many applications.

All Bryan boilers are built in accordance with the requirements of the ASME Boiler and Pressure Vessel Code.

Efficient "Flexible Water Tube" design

The Bryan bent water tube provides rapid internal circulation — for maximum heat transfer and operating efficiency.

Easily replaceable tubes

Tubes are easily removable and replaceable without welding or rolling. Little service space is required.

No "Thermal Shock"

The flexibility of the bent water tube design eliminates all possible damage from "Thermal Shock" and from stresses caused by poor or unequal internal circulation. This is particularly important with forced hot water heating systems designed for higher temperatures and greater temperature drops.

Steam Boilers: Section IV or I

Steam release area

Large, full-size steam drum provides for dry steam and stable water level.

High or low pressure construction

Boiler is constructed as standard for 15 psi or 150 psi maximum working pressure. Also available for higher pressures to 300 psi.

Water Boilers: Section IV

High or low pressure construction

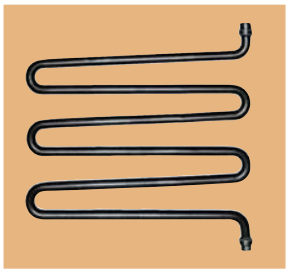

Boiler is constructed as standard for 160 psi maximum working pressure at 230°F operating temperature and 250°F design temperature. Also available for higher pressures to 250 psi, at 285°F operating temperature and 300°F design temperature.

Natural internal circulation

The water tube design and the large downcomer legs provide adequate internal circulation without concern over exterior pumping conditions. Low pressure drop through boiler.

Compact — minimum floor space

Requires less floor space than most boilers, minimum boiler room size. Since the tubes can be removed from one side, the boilers are available with right or left hand construction for common tube removal, further minimizing space needs.

Shipped completely assembled and wired. Units can also be shipped "Knocked Down" for on-site assembly.

Bryan CLM Series Boiler Specifications

BOILER MODEL (1)	INPUT MBH (KW)	OUTPUT @ 80% EFFICIENCY (2)		OUTPUT @ 81.5% EFFICIENCY (3)		STEAM OUTPUT (4) LBS/HR (KG/HR)	HTG. SURFACE SQ. FT. (M²)	APPROX. SHIP LBS. (KG)
		MBH (KW)	HP (KW)	MBH (KW)	HP (KW)			
CLM120-W	1,200 (352)	960 (281)	29 (281)	978 (287)	29 (287)	—	145 (13.5)	2,250 (1,021)
CLM120-S	1,200 (352)	960 (281)	29 (281)	—	—	990 (449)	145 (13.5)	2,450 (1,111)
CLM150-W	1,500 (440)	1,200 (352)	36 (352)	1,223 (358)	37 (358)	—	180 (16.7)	2,675 (1,213)
CLM150-S	1,500 (440)	1,200 (352)	36 (352)	—	—	1,237 (561)	180 (16.7)	2,850 (1,293)
CLM180-W	1,800 (527)	1,440 (422)	43 (422)	1,467 (430)	44 (430)	—	215 (20.0)	2,975 (1,350)
CLM180-S	1,800 (527)	1,440 (422)	43 (422)	—	—	1,485 (674)	215 (20.0)	3,250 (1,474)
CLM210-W	2,100 (615)	1,680 (492)	50 (492)	1,712 (502)	51 (502)	—	251 (23.3)	3,475 (1,576)
CLM210-S	2,100 (615)	1,680 (492)	50 (492)	—	—	1,732 (786)	251 (23.3)	3,650 (1,656)
CLM240-W	2,400 (703)	1,920 (563)	57 (563)	1,956 (573)	58 (573)	—	287 (26.7)	3,900 (1,769)
CLM240-S	2,400 (703)	1,920 (563)	57 (563)	—	—	1,979 (898)	287 (26.7)	4,050 (1,837)
CLM270-W	2,700 (791)	2,160 (633)	64 (633)	2,201 (645)	66 (645)	—	322 (29.9)	4,400 (1,996)
CLM270-S	2,700 (791)	2,160 (633)	64 (633)	—	—	2,227 (1,010)	322 (29.9)	4,900 (2,223)
CLM300-W	3,000 (879)	2,400 (703)	72 (703)	2,445 (716)	73 (716)	—	360 (33.5)	4,800 (2,177)
CLM300-S	3,000 (879)	2,400 (703)	72 (703)	—	—	2,474 (1,122)	360 (33.5)	4,925 (2,234)

NOTES: (1) W = Water / S = Steam
(2) Output and horsepower based on boiler industry standard of 80% of input.
(3) Output and horsepower based on an average natural gas combustion efficiency of 81.5% for hot water boiler. Actual combustion efficiencies for oil will be higher.
(4)Lbs. steam per hour from and at 212°F.

Low initial cost, high operating efficiency deliver substantial return on investment

BRYAN® BOILERS
The only boilers with full non-prorated
25 Year Warranty
Protection Against Thermal Shock

- **True "flexible water tube" design guaranteed shock free**
- **Longer service life with superior performance**
- **Full five sq ft of heating surface per BHP**

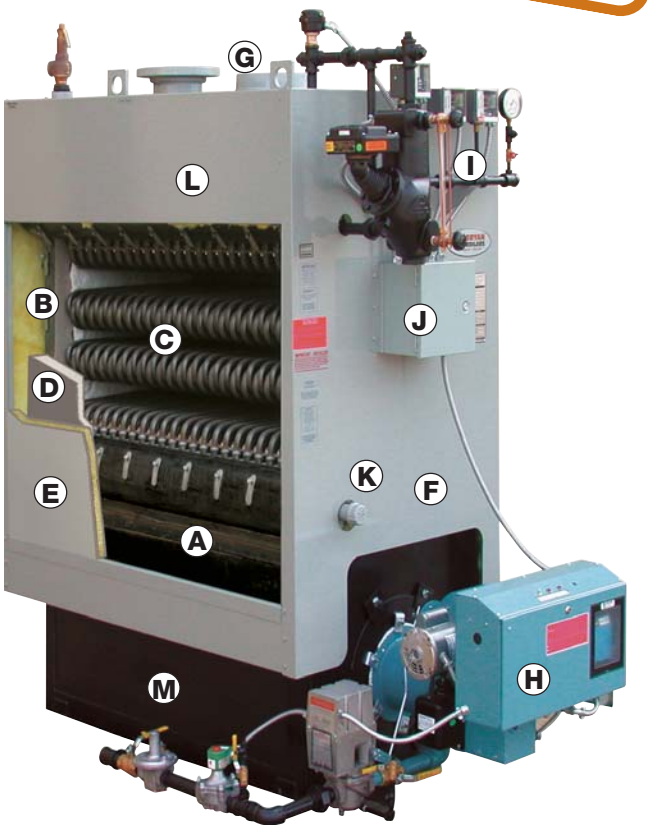

Quality Construction Features

A. Heavy steel boiler frame, built and stamped in accordance with the appropriate ASME Boiler Code.

B. Large volume water leg downcomers promote rapid internal circulation, temperature equalization and efficient heat transfer.

C. Bryan bent water tubes are flexible, individually replaceable without welding or rolling. Never more than two tube configurations.

D. Boiler tube and furnace area access panel: heavy gauge steel casing with 2" high temperature ceramic fiber and insulation, bolted and tightly sealed to boiler frame.

E. Jacket access panels make the interior of the boiler easily accessible for service and inspection.

F. Heavy gauge steel boiler jacket with rust-resistant zinc coating and attractive enamel finish, insulated with 1½" fiberglass to insure exceptionally cool outer surface.

G. Minimum sized flue vent.

H. Forced draft, flame retention head type burner. Efficient combustion of oil or gas, quiet operation.

I. All controls, gauges, relief valve(s) are factory installed and wired and easily accessible for servicing.

J. Electrical box: all controls installed and connected to terminal strip.

K. Water side or steam side interior accessible for cleanout and inspection, front and rear openings, upper and lower drums.

L. Steam boilers with extra large drum with high steam release area ensure stable water level and dry steam.

M. Steel plate boiler base with lightweight, high temperature insulating firebrick combustion chamber, designed for maximum combustion efficiency.

Bryan CLM Series Boilers Standard and Optional Equipment

STANDARD EQUIPMENT FURNISHED

Water Boiler

Combination thermometer and pressure gauge, ASME-rated boiler relief valve, water temperature control (240°F max std.), high limit control, probe LWCO.

Steam Boiler

Steam pressure gauge, steam pressure control, combination low water cutoff and pump control, auxiliary low water cutoff, high limit pressure control, ASME-rated boiler relief valve, water glass set.

Straight gas fired unit

Electronic combustion safety control, automatic operating gas valve, safety gas valve, pilot solenoid valve, pilot ignition assembly, main manual gas shut-off valve, pilot cock, pilot and main gas pressure regulators, air safety switch, control panel, all controls installed and wired.

Straight oil fired unit

Electronic combustion safety control, dual oil valves, oil ignition transformer, two-stage fuel unit, direct spark ignition of oil, oil nozzle assembly, control panel, all controls installed and wired.

Combination gas-oil unit

Electronic combustion safety control, automatic operating gas valve, safety gas valve, pilot solenoid valve, pilot ignition assembly, main manual gas shut-off valve, pilot cock, pilot and main gas pressure regulators, air safety switch, manual fuel selector switch, dual oil valves, gas pilot for both fuels, two-stage fuel unit, nozzle assembly, control panel, all controls installed and wired.

OPTIONAL EQUIPMENT:

1. Manual reset high limit control
2. Manual reset low water cutoff
3. Auxiliary low water cutoff
4. Combination low water cutoff and feeder
5. Alarm bells or horns
6. UL, CUL, CSD-1, FM, IRI or other insur-ance approved control systems
7. Control panel mounted on boiler
8. Indicating lights, as desired
9. Lead-lag systems for two or more boilers with or without outdoor reset control
10. Draft control system
11. Special construction: left hand, Knocked Down.

OPTIONAL CONSTRUCTION:

Steam boiler

Optional construction to ASME Power Boiler Code requirements for pressure exceeding 150 psi to maximum of 300 psi design pressure.

Hot water boiler

Optional construction to ASME Power Boiler Code requirements for temperatures exceeding 240° F and/or pressure exceeding 160 psi to maximum of 285° F operating and 300° F design temperature and 250 psi.

When ordering, please specify:
1. Boiler size
2. Supply and return temperatures required
3. Boiler relief valve setting
4. Type of fuel: natural, LP, or other gas and/or No. 2 oil
5. If gas, type, BTU content, specific gravity and pressure available
6. Electric power voltage, phase and frequency
7. Optional extra equipment or construction
8. Special approvals required (UL, CUL, CSD-1, FM, or IRI)
9. Altitude

Bryan CLM Series Steam & Hot Water Boilers

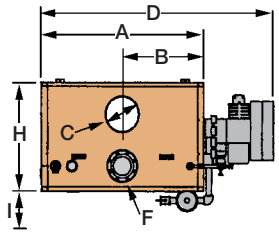

PLAN VIEW

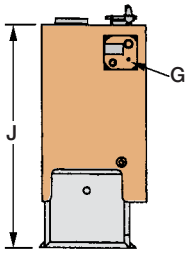

LEFT END VIEW

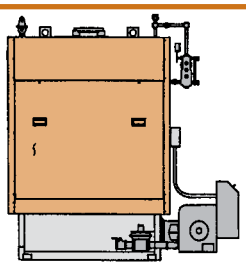

FRONT VIEW

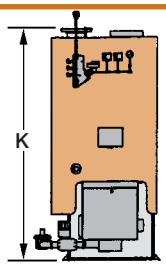

RIGHT END VIEW

STEAM BOILER DIMENSIONS in inches (cm)

	A	B	C	D	E	F		G	H	I	J	K
Boiler Model Number	Length of Jacket	Flue Location	Flue Size	Overall Length	Gas Train Connection (Approx.)	Supply Nozzle 15 psi	Supply Nozzle 150 psi	Feed Conn.	Width Outside Jacket	Min. Tube Removal Clearance	Height Over Jacket	Floor to Flow Nozzle
CLM-120-S	50 11/16 (128.74)	25 11/32 (64.37)	10 (25.40)	78 11/16 (199.86)	1 1/4 NPT (3.18)	6 FLG (15.24)	3 NPT (7.62)	1 1/2 NPT (3.81)	38 3/8 (97.47)	30 (76.2)	79 7/16 (201.76)	82 5/8 (209.86)
CLM-150-S	59 11/16 (151.60)	29 27/32 (75.80)	12 (30.48)	87 11/16 (222.72)	1 1/2 NPT (3.81)	6 FLG (15.24)	3 NPT (7.62)	1 1/2 NPT (3.81)	38 3/8 (97.47)	30 (76.2)	79 7/16 (201.76)	82 5/8 (209.86)
CLM-180-S	69 1/8 (175.57)	34 9/16 (87.78)	14 (35.56)	97 1/8 (246.69)	2 NPT (5.08)	6 FLG (15.24)	3 NPT (7.62)	1 1/2 NPT (3.81)	38 3/8 (97.47)	30 (76.2)	79 7/16 (201.76)	82 5/8 (209.86)
CLM-210-S	78 3/8 (199.07)	39 3/16 (99.53)	14 (35.56)	106 3/8 (270.19)	2 NPT (5.08)	6 FLG (15.24)	3 NPT (7.62)	1 1/2 NPT (3.81)	38 3/8 (97.47)	30 (76.2)	79 7/16 (201.76)	82 5/8 (209.86)
CLM-240-S	88 (223.52)	44 (111.76)	16 (40.64)	116 (294.64)	2 NPT (5.08)	6 FLG (15.24)	3 NPT (7.62)	1 1/2 NPT (3.81)	38 3/8 (97.47)	30 (76.2)	79 7/16 (201.76)	82 5/8 (209.86)
CLM-270-S	97 (246.38)	48 1/2 (123.19)	16 (40.64)	125 (317.50)	2 NPT (5.08)	6 FLG (15.24)	3 NPT (7.62)	1 1/2 NPT (3.81)	38 3/8 (97.47)	30 (76.2)	79 7/16 (201.76)	82 5/8 (209.86)
CLM-300-S	106 5/8 (270.82)	53 3/16 (135.41)	16 (40.64)	134 5/8 (341.94)	2 1/2 NPT (6.35)	6 FLG (15.24)	3 NPT (7.62)	1 1/2 NPT (3.81)	38 3/8 (97.47)	30 (76.2)	79 7/16 (201.76)	82 5/8 (209.86)

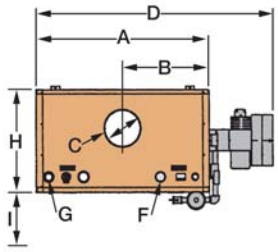

PLAN VIEW

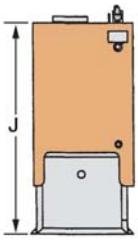

LEFT END VIEW

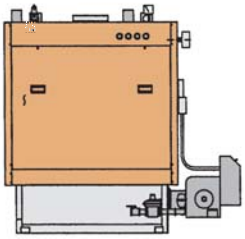

FRONT VIEW

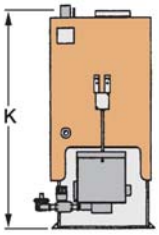

RIGHT END VIEW

WATER BOILER DIMENSIONS in inches (cm)

	A	B	C	D	E	F	G	H	I	J	K
Boiler Model Number	Length of Jacket	Flue Location	Flue Size	Overall Length	Gas Train Connection	Supply Nozzle	Return Nozzle	Width Outside Jacket	Min. Tube Removal Clearance	Height Over Jacket	Floor to Flow Nozzle
CLM-120-W	50 11/16 (128.74)	25 5/16 (64.29)	10 (25.40)	78 11/16 (199.86)	1 1/4 NPT (3.18)	3 NPT (7.62)	3 NPT (7.62)	34 5/8 (87.94)	30 (76.2)	72 1/16 (180.03)	76 3/16 (193.51)
CLM-150-W	59 11/16 (151.60)	29 13/16 (75.72)	12 (30.48)	87 11/16 (212.72)	1 1/2 NPT (3.81)	3 NPT (7.62)	3 NPT (7.62)	34 5/8 (87.94)	30 (76.2)	72 1/16 (180.03)	76 3/16 (193.51)
CLM-180-W	69 1/8 (175.57)	34 9/16 (87.78)	14 (35.56)	97 1/8 (246.69)	2 NPT (5.08)	3 NPT (7.62)	3 NPT (7.62)	34 5/8 (87.94)	30 (76.2)	72 1/16 (180.03)	76 3/16 (193.51)
CLM-210-W	78 3/8 (199.07)	39 3/16 (99.53)	14 (35.56)	106 3/8 (270.19)	2 NPT (5.08)	3 NPT (7.62)	3 NPT (7.62)	34 5/8 (87.94)	30 (76.2)	72 1/16 (180.03)	76 3/16 (193.51)
CLM-240-W	88 (223.52)	44 (111.76)	16 (40.64)	116 (294.64)	2 NPT (5.08)	3 NPT (7.62)	3 NPT (7.62)	34 5/8 (87.94)	30 (76.2)	72 1/16 (180.03)	76 3/16 (193.51)
CLM-270-W	97 (246.38)	48 1/2 (123.19)	16 (40.64)	125 (317.50)	2 NPT (5.08)	3 NPT (7.62)	3 NPT (7.62)	34 5/8 (87.94)	30 (76.2)	72 1/16 (180.03)	76 3/16 (193.51)
CLM-300-W	106 5/8 (270.82)	53 3/16 (135.41)	16 (40.64)	134 5/8 (341.91)	2 1/2 NPT (6.35)	3 NPT (7.62)	3 NPT (7.62)	34 5/8 (87.94)	30 (76.2)	72 1/16 (180.03)	76 3/16 (193.51)

Specifications subject to change without notice. Consult factory to consult on other boiler options.

BRYAN BOILERS®

Bryan Steam LLC — Leaders Since 1916
783 N. Chili Ave., Peru, Indiana 46970 U.S.A.
Phone: 765-473-6651 • Internet: www.bryanboilers.com
Fax: 765-473-3074 • E-mail: bryanboilers@iquest.net

©2005 Bryan Steam LLC

Printed in USA
45-6832

Energy Management System Components

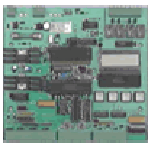
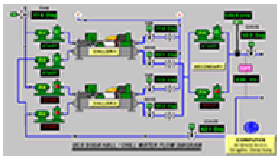

WebCTRL®

Powerful and Intuitive Front End for Building Control

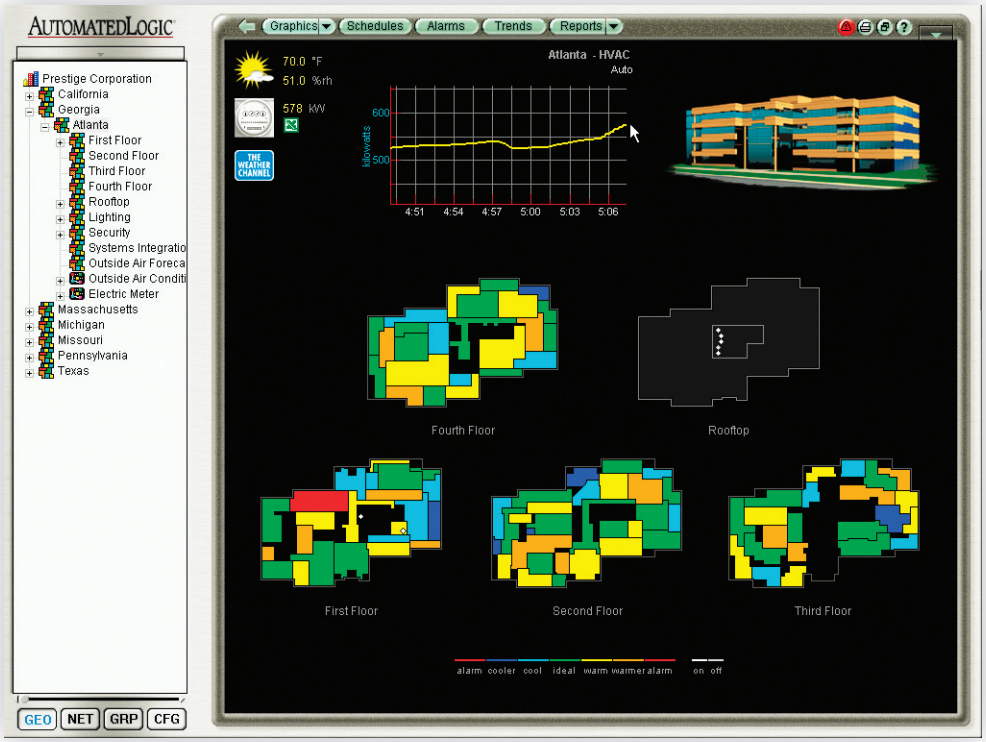

Patents pending.

Navigational tree, intelligent use of color showing the status of zones and trends, plus superior graphics make WebCTRL rich in information yet easy to use.

Automated Logic's WebCTRL® is a building automation system that offers an intuitive user interface and powerful control features. Your building can be accessed from anywhere in the world using a standard web browser, eliminating the need for special software on the workstation. Through a browser you can access all building management functions including:

- setting and changing schedules,
- adjusting setpoints and other control properties,
- graphically trending important building conditions,
- viewing and acknowledging alarms, and
- running preconfigured and custom reports on energy usage, occupant overrides, tenant billing, and much more. (With WebCTRL's spreadsheet-style report generator, you can create your own reports with ease.)

Developed entirely around proven open standards and web technologies, WebCTRL's server software runs on a variety of major platforms, including Windows, Sun Solaris and Linux. Major databases are supported by the server, such as MS SQL Server, My SQL and Oracle.

Key Features and Benefits

- Intuitive, comprehensive building operation with dynamic, interactive graphical access
- Completely designed around open standards
- Uses the language of the web (HTTP) to communicate over the Internet or intranet without special software or plug-ins
- Runs on multiple platforms including Windows, Linux, and Sun Solaris
- Advanced alarm management capabilities including email, pagers, network printers, etc.
- Uses sophisticated system protection with multi-level passwords and Secure Sockets Layer with 128-bit encryption for security
- Monitors and controls a wide variety of third party HVAC and electrical equipment through a browser
- Fully compatible with legacy ALC Systems

AUTOMATEDLOGIC®
CORPORATION

1150 Roberts Boulevard • Kennesaw, Georgia 30144 • 770/429-3000 • Fax 770/429-3001 • www.automatedlogic.com

WebCTRL®

Specifications

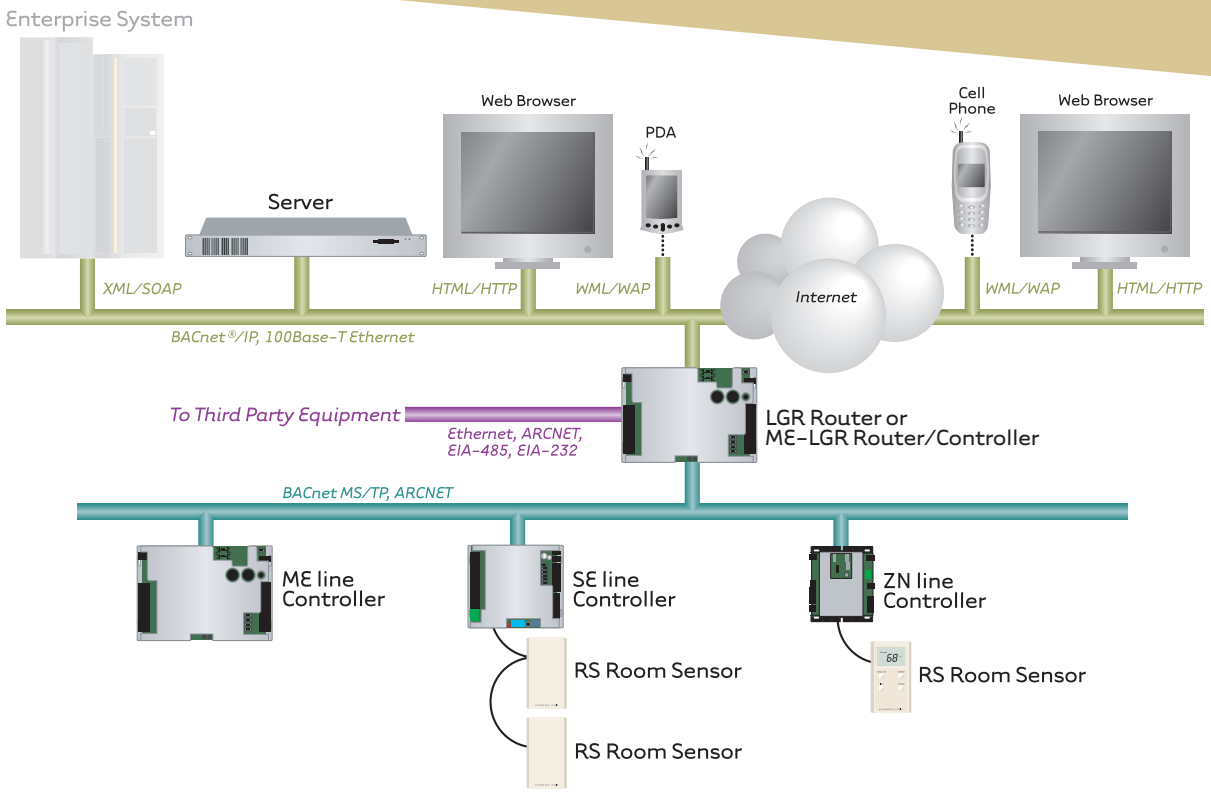

WebCTRL Features

- Unlimited simultaneous users
- Runs on MS Windows®, Red Hat Linux/Sun Solaris
- Includes Secure Sockets Layer with 128 bit encryption
- Supports Oracle, MS SQL Server and other databases
- Supports data exchange via XML/SOAP (Web Services)
- Supports third party integration
- Supports communication to field controllers via BACnet (TCP/IP)
- Supports web appliances (Palm Pilots, Pocket PCs, etc.)
- Includes alarming, trending, scheduling, and reporting capability
- Includes international languages (International English, Spanish, French, German, Korean, Traditional and Simplified Chinese)
- Fully compatible with legacy ALC systems

Automated Logic Corporation • 1150 Roberts Boulevard • Kennesaw, Georgia 30144 • 770/429-3000 • Fax 770/429-3001 • www.automatedlogic.com

© 2005, Automated Logic Corporation. Automated Logic, the Automated Logic logo and WebCTRL are registered trademarks of Automated Logic Corporation.
BACnet is a registered trademark of ASHRAE. All other trademarks are the property of their respective owners. Specifications are subject to change without prior notice.
Part #CSWCTRLrev7

LGR line

High Speed Ethernet Router

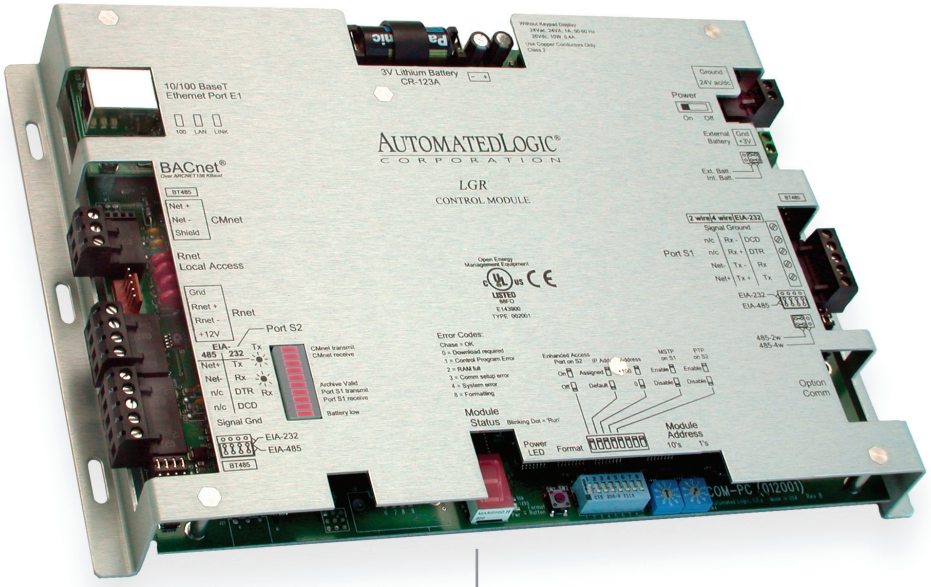

The LGR is an extremely powerful, high-speed device router/gateway that can connect hundreds of control modules to a BACnet®/IP backbone. Support for BACnet/IP, BACnet-over-Ethernet, ARCNET 156 kbps, MS/TP, and BACnet PTP communications are standard. A wide range of open and proprietary protocol translator drivers allow the LGR to also serve as a gateway to other manufacturers' equipment. Fully programmable, the LGR can also execute complex control strategies for high-level system integration.

Key Features and Benefits

- 10/100Base-T Fast Ethernet allows modules to serve as a BACnet router between BACnet/IP system backbone and field devices subnetwork.
- Native BACnet communications to field devices over a high-speed ARCNET 156 kbps or BACnet MS/TP network.
- Can route messages from BACnet/IP to BACnet-over-Ethernet, providing compatibility with older BACnet systems.
- A wide range of open and proprietary protocol translator drivers allow the LGR to also serve as a gateway to other manufacturers equipment.
- Designed with a high-speed true 32-bit microprocessor with cache memory, Fast Ethernet controller, high performance 32-bit serial communications co-processor, and ARCNET communications co-processor, LGR routers have the horsepower to serve the most demanding translation and communications functions.
- Can support hundreds of individual control programs written in ALC's legendary Eikon® graphic programming language. LGRs can handle the toughest system integration control programs.
- 16 MByte battery-backed SDRAM (32 bit wide), with 12 MBytes available for use, stores application programs, trends and other data when power is lost.
- 8 MByte Flash memory (32 bit wide) for easy field upgrades over the network.
- Battery backed real-time clock provides true stand-alone capabilities. LGRs recover from power failures providing full continuity of operations, even when communications are disrupted.
- Rnet port supports Automated Logic's line of RS room sensors and BAC*view*6 local operator interface, and provides local access to the system. Enhanced local access is also available on EIA-232 port.
- Tough construction delivers superior performance and reliability. Control modules are constructed with a rugged aluminum cover which provides optimum electrical protection and noise immunity.

AUTOMATEDLOGIC®
CORPORATION

1150 Roberts Boulevard • Kennesaw, Georgia 30144 • 770/429-3000 • Fax 770/429-3001 • www.automatedlogic.com

LGR line

Specifications

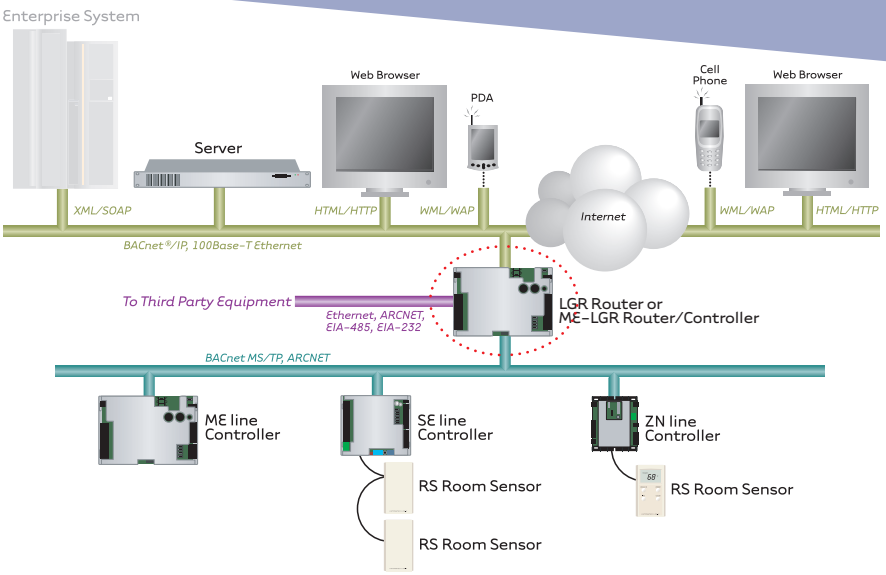

BACnet Support:	Conforms to the BACnet Advanced Application Controller (B-AAC) Standard Device as defined in BACnet 135-2001 Annex L.
Communication:	The following ports are available on the LGR routers:
	EIA-485 port for ARCNET 156 kbps. EIA-232/EIA-485 configurable port for third party devices or MS/TP (9600 bps - 76.8 kbps). NOTE: EIA-485 is 2 or 4 wire selectable. Second EIA-232/EIA-485 configurable port for third party devices or system start-up. Local access port for system start-up and troubleshooting. Rnet port for RS room sensors. The Rnet port supports up to four RS Standard sensors and one RS Pro sensor for averaging or high/low select control. Rnet port can also support a local operator interface (BAC*view*[6]).
Microprocessor:	32-bit Motorola Power PC microprocessor with cache memory, Fast Ethernet controller, high performance 32-bit communication co-processor, ARCNET communication co-processor and I/O expansion CAN co-processor.
Memory:	16 MByte non-volatile battery-backed SDRAM (with 12 MBytes available for use), 8 MByte Flash memory, 32-bit memory bus. (Shelf life of the battery is 10 years with 720 hours of continuous operation.)
Real-time Clock:	Battery-backed real-time clock.
Status Indicators:	LED status indicators for EIA-232/485 communication, Ethernet port communication, and low battery status. 7-segment status display for running, error, and power status.
Module Addressing:	Rotary dip switches for intuitive network addressing of modules.
Protection:	Built-in surge and transient protection circuitry for power and communications.
Listed by:	UL916 (Canadian Std C22.2 No. 205-M1983), CE, FCC Part 15 - Subpart B - Class A.
Environmental Operating Range:	-20°F to 140°F (-29°C to 60°C); 10 to 90% relative humidity, non-condensing. NOTE: Control modules should be installed within the building.
Power Requirements:	24 Vac ± 10%, 50 to 60Hz, 24 VA, or 26 Vdc ± 10%, 10W. NOTE: Power consumption will increase when BACview[6] or other accessories are attached.
Physical:	Rugged aluminum cover. Removable screw terminal blocks.
Weight:	1.4 lb. (45.5 kg)
Dimensions:	<u>Overall</u> Width: 11-5/16" (287mm) Height: 7-1/2" (190mm) Depth: 2-3/4" (70mm) min. panel depth <u>Mounting</u> Width: 10-13/16"(275mm) Height: 5" (127mm)

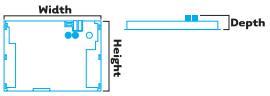

Automated Logic Corporation • 1150 Roberts Boulevard • Kennesaw, Georgia 30144 • 770/429-3000 • Fax 770/429-3001 • www.automatedlogic.com

© 2004, Automated Logic Corporation. Automated Logic, the Automated Logic logo, BACview and WebCTRL are registered trademarks of Automated Logic Corporation.
BACnet is a registered trademark of ASHRAE. All other trademarks are the property of their respective owners. Specifications are subject to change without prior notice.
Part #CSLGRrev3

ZN551

Zone Controller

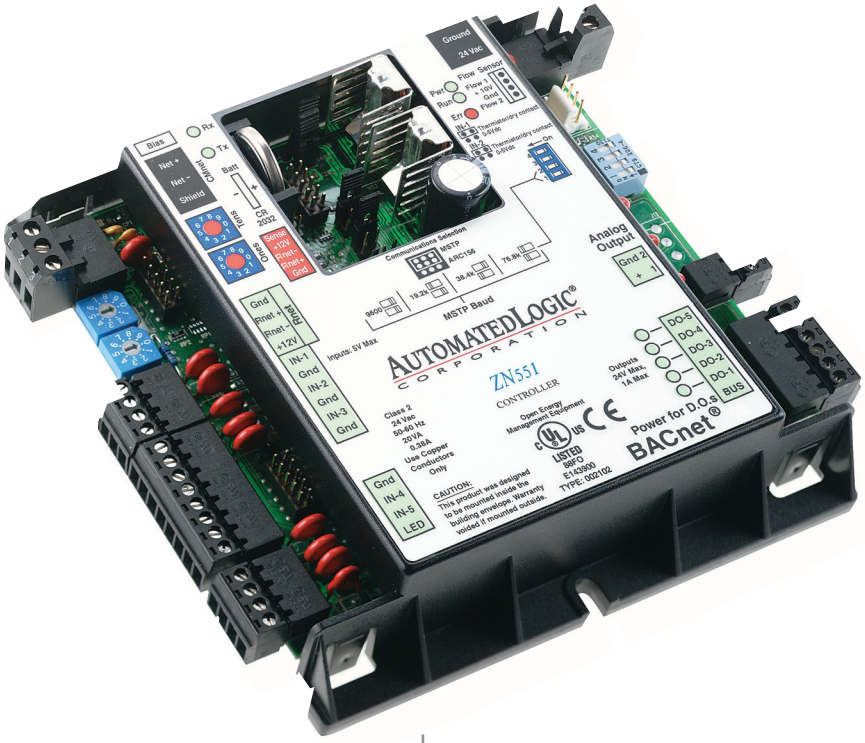

Automated Logic's ZN551 provides unprecedented power and flexibility through fully programmable networked controllers. The ZN551 controllers connect to the Building Automation System (BAS) network using BACnet over ARCNET 156 kbps or MS/TP. The ZN551 supports a line of RS room sensors using Rnet port.

Key Features and Benefits

- Powerful zone controller for VAV, heat pump, unit ventilator and other packaged HVAC applications.
- Native BACnet communications to field devices over a high speed ARCNET 156 kbps or BACnet MS/TP network.
- Uses a high speed 16-bit microprocessor with 1 MByte Flash memory and 512 KByte of RAM for unparalleled programmability. Firmware upgrades can be downloaded remotely — no chip replacement necessary.
- The ZN551 is part of a full line of ZN controllers which include a variety of Universal Inputs, Binary Outputs and 0-10VDC Analog Outputs. Other ZN models with built-in flow sensors and/or integral damper actuators are available as well as optional single/dual air flow sensors for pressure independent VAV applications.
- Rnet port supports Automated Logic's line of RS room sensors and provides local access to the system.
- The ZN551 controller is fully graphically programmable and offers full peer-to-peer communications with other ZN-line, ME-line or SE-line controllers. Graphical programs are universally understood and provide self-documenting control sequences.
- An extensive library of pre-engineered control routines provides proven solutions for most zone control applications. Custom programs can be easily written in EIKON®, ALC's legendary graphic programming language.
- Compact and rugged plastic enclosure for easy mounting.

AUTOMATEDLOGIC®
CORPORATION

1150 Roberts Boulevard • Kennesaw, Georgia 30144 • 770/429-3000 • Fax 770/429-3001 • www.automatedlogic.com

ZN551

Specifications

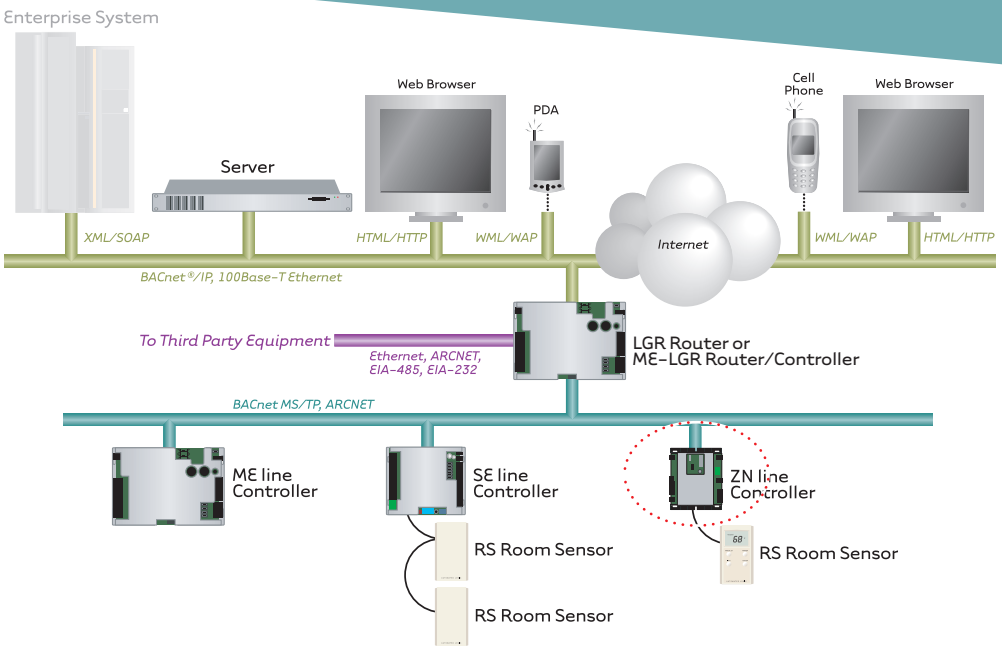

BIBB Support:	Supports BACnet Interoperability Building Blocks (BIBBs) from the following groups: Data Sharing, and Device and Network Management.
Communication:	The following ports are available on the ZN551 module: EIA-485 port for ARCNET 156 kbps or MS/TP (9600 bps — 76.8 kbps). Local access port for system start-up and troubleshooting.Rnet port for RS room sensors. The Rnet port supports up to four RS sensors and one RS Pro sensor for averaging or high/low select control. NOTE: Local operator interface (BAC*view*®) is not supported. LogiStat port for LogiStat room sensors. Two Analog Inputs are used by the LogiStat port. NOTE: The LogiStat Pro is not supported on the ZN-line (use RS Pro on the Rnet port instead).
Digital Outputs:	Five digital outputs, relay contact rated at 1A max @ 24VAC, configured normally open
Universal Inputs:	Five inputs with 10 bit A/D resolution. Two inputs are configurable for dry contact, type 2 thermistors, or 0 - 5 VDC. Inputs 4 and 5 are taken when a LogiStat sensor is connected — these inputs are available if RS sensors are used.
Analog Outputs:	One analog output, 0-10VDC with 8-bit resolution.
Microprocessor:	High speed 16-bit microprocessor with ARCNET communication co-processor.
Memory:	512 KByte non-volatile battery-backed RAM, 1 MByte Flash memory, 16-bit memory bus. (Shelf life of the battery is 10 years with 10,000 hours of continuous operation.)
Status Indicators:	LED status indicators for EIA-485 communication, running, error, power and all digital outputs.
Module Addressing:	Rotary dip switches for intuitive network addressing of modules.
Protection:	Built in surge and transient protection circuitry for power and communications.
Listed by:	UL916 (Canadian Std C22.2 No. 205-M1983), CE, FCC Part 15 — Subpart B — Class A
Environmental Operating Range:	0°F to 130°F (-17.8°C to 54.4°C); 10 -90% relative humidity, non-condensing.
Power Requirements:	24VAC ± 10%, 50-60Hz, 20VA
Physical:	Rugged GE C2950 Cycoloy plastic.
Weight:	0.6 lb. (0.27 kg)
Dimensions:	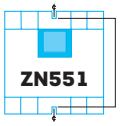 Mounting hole spacing 5-9/16". <u>Overall</u> Width: 5-1/16" (129mm) Height: 5-11/16" (144mm) Depth: 1-1/2" (38mm) min. panel depth <u>Mounting</u> Two mounting holes center line as at left with 5-9/16" (141mm) spacing (height).

Automated Logic Corporation • 1150 Roberts Boulevard • Kennesaw, Georgia 30144 • 770/429-3000 • Fax 770/429-3001 • www.automatedlogic.com

© 2004, Automated Logic Corporation. Automated Logic, the Automated Logic logo, BAC*view*, EIKON and WebCTRL are registered trademarks of Automated Logic Corporation. BACnet is a registered trademark of ASHRAE. All other trademarks are the property of their respective owners. Specifications are subject to change without prior notice.

Part # CSZN551rev3

RS

Intelligent Room Sensors

RS Standard

RS Plus

RS Pro

Automated Logic's line of intelligent sensors includes the RS Standard, RS Plus and RS Pro, and is designed for use with ZN, SE, and ME line controllers. The RS Plus offers a local setpoint adjustment and override to an occupied mode and LED indication of current status. The RS Pro has a large LCD display and easy-to-use occupant controls. All sensors provide precision measurement and communication capabilities in attractive low profile enclosures. A hidden communications jack provides access to the HVAC control system for commissioning and maintenance.

Key Features and Benefits

All Room Sensors:

- Attractive, low profile enclosure in a neutral color complements any room.
- Precise 10K ohm thermistor with + 0.36°F (0.2°C) standard accuracy and less than 0.18°F (0.01°C) drift over a ten year span — requires no maintenance or re-calibration.
- A hidden communication port allows a laptop computer to be connected to the HVAC Control System.
- Multiple RS room sensors can be daisy-chained to one controller for temperature averaging or high/low select control. (One RS Plus or RS Pro with up to four RS Standards.)
- Mounts on a standard 2" by 4" electrical box for easy installation.

RS Plus:

- Features a convenient local setpoint adjustment through an easy to use slide potentiometer.
- Occupancy override is simple using the momentary push button on the RS Plus with a bright LED for immediate indication of status. When the override button is pressed during an unoccupied mode, the zone reverts to an occupied setpoint for a predeterminded period of time.

RS Pro:

- Large, easy-to-read LCD on the RS Pro displays zone temperature, outside air temperature, heating setpoint, cooling setpoint, and local override (after-hours occupancy) time.
- Occupancy override is easy using the "Manual On" momentary pushbutton on the RS Pro. A single push switches the zone to an Occupied mode for a preset period of time. Multiple pushes increases the override time, and the LCD displays precisely how long the zone will stay occupied. The occupied time per push and maximum override time are fully programmable in EIKON®.
- Zone setpoints can be easily changed on the RS Pro by pressing the Warmer or Cooler button. Multiple pushes give additional adjustment, and the LCD panel shows what the new setpoint is. How much each push affects the setpoint and the maximum total adjustments are fully programmable in EIKON.

AUTOMATEDLOGIC®
CORPORATION

1150 Roberts Boulevard • Kennesaw, Georgia 30144 • 770/429-3000 • Fax 770/429-3001 • www.automatedlogic.com

RS

Specifications

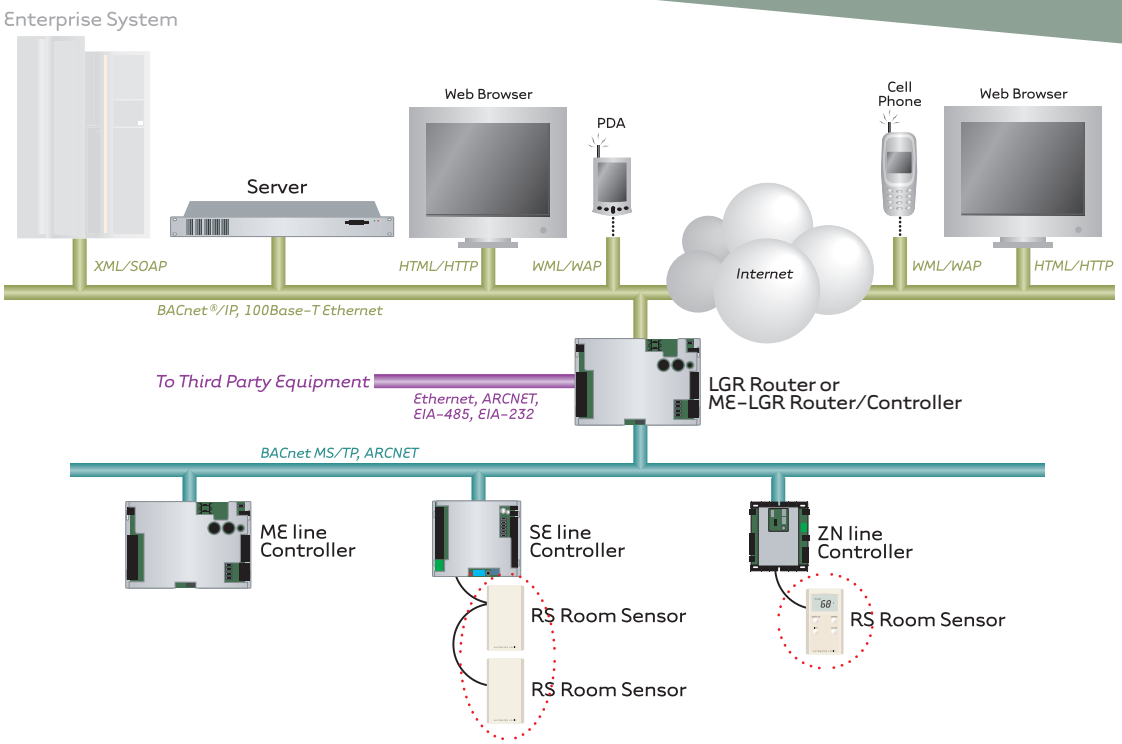

Communication:	115 kbaud Rnet
Power:	ZN, SE, or ME line Controllers
Sensing Element:	Precision Thermistor. Standard accuracy ±0.35°F (0.2°C). Less than ±0.18°F (0.1°C) drift over a 10 year period.
Wiring:	Remote mounting up to 500 ft. is via four conductor shielded cable – 18 AWG if using BACview on the Rnet, 20 AWG if using only RS sensors on the Rnet.
Local Access Port:	5 pin port for commissioning and maintenance.
Mounting:	Standard 2" by 4" electrical box using 6-32 by 1/2" mounting screws provided.
Overall Dimensions:	2-3/4" (width) by 4-3/4" (height) by 5/8" (depth) (depth is a maximum 15/16"). 70mm (width) by 120mm (height) by 16mm (depth) (depth is a maximum 24mm).

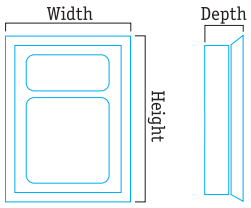

Automated Logic Corporation • 1150 Roberts Boulevard • Kennesaw, Georgia 30144 • 770/429-3000 • Fax 770/429-3001 • www.automatedlogic.com

© 2004, Automated Logic Corporation. Automated Logic and the Automated Logic logo, EIKON, and WebCTRL are registered trademarks of Automated Logic Corporation. BACnet is a registered trademark of ASHRAE. All other trademarks are the property of their respective owners. Specifications are subject to change without prior notice.

Part #CSRSrev4

Tubocor Compressors

The Turbocor Family of Compressors

The "Next Generation" of HVAC Mid-Range compressors

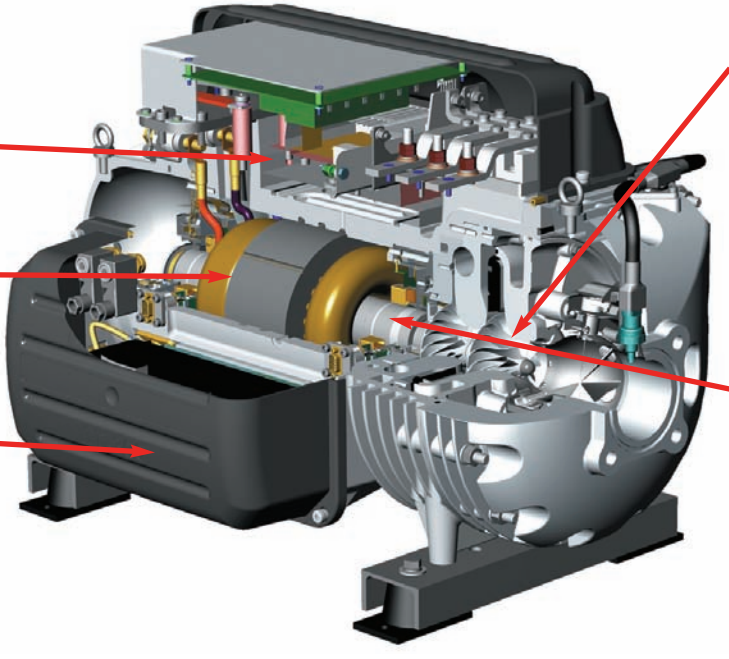

A VFD (Variable Frequency Drive) built in as a standard providing unmatched part-load efficiency.

A permanent magnet motor which cuts size and weight while increasing efficiency.

A fully functional computer to provide control plus an unheard of level of monitoring and diagnostics.

Two Stage, Direct Drive, Hermetic Centrifugal compressor with unshrouded impellers resulting in high efficiency at full load and extraordinarily high efficiency at part load conditions.

Oil-free magnetic bearings provide quiet and reliable operation. No need for oil, reduces maintenance by up to 50%, and eliminates the complexity, cost and reliability issues of oil-based designs.

An HVAC compressor that is:

33%+ More Efficient: A compressor 33%+ more efficient than other compressors in its size range. This exceptional performance can be monitored, either on-site or remotely, via a state-of-the-art monitoring and diagnostics system.

Totally Oil-Free: Oil-free operation is something the industry has worked decades to achieve. This *oil-free* design eliminates not only the potential for efficiency-robbing oil contamination, but also all of the oil management accessories: oil heaters, oil pumps, oil separators, oil filters, etc., plus oil disposal.

Extremely Lightweight: A 60-to 90-ton TURBOCOR TT-300 compressor weighs only 265 pounds—approximately 1/5 the weight of conventional compressors. Further, this compressor only requires about half the space of a traditional compressor.

Extraordinarily Quiet: At an operating sound level of 70 dBA at 5′ a compressor is so quiet that, given typical equipment background noise, one literally cannot hear it run.

Redefines Soft-Start: The TT-300 compressor redefines soft-start—drawing less than 2 amps, compared to 500-600 amps required by conventional compressors using across-the-line starters.

That's leading edge technology!

Visit our website at www.turbocor.com
to learn more about this and other Danfoss Turbocor products.

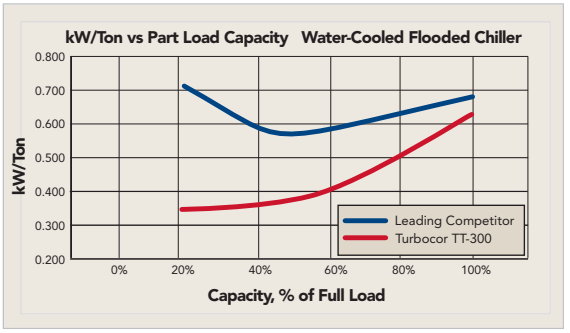

Unprecedented energy efficiency

for mid-sized commercial air conditioning applications

Outstanding energy savings from digitally controlled, frictionless two-stage centrifugal compression means significant reductions in operating cost and environmental emissions associated with energy production.

Chart 1 shows the full and part load performance curve of the Turbocor compressor compared with a typical oil-flooded screw compressor on a 75-ton water-cooled chiller. The integrated part load values (IPLV) yield a 33%+ improvement in many applications.

Typical water-cooled chiller operating cost savings calculation

	Turbocor	Screw Compressor	Savings
IPLV kW/TR	0.38	0.63	0.25
Tons capacity	90	90	—
kW*	34	57	23
Annual operating days	240	240	—
Operating hours per day	12	12	—
Total annual kWh	97,920	164,160	66,240
Power cost ($/kWh)	$0.10	$0.10	—
Annual operating cost	$9,792.00	$16,416.00	**$6,624.00**
2-year cumulative savings			**$13,248.00**
3-year cumulative savings			**$19,872.00**

* Calculations based on average load of 60%

Environmental Impact:
Extending this example, the 66,240 kWh energy savings through the use of a Turbocor compressor yields an annual CO_2 emissions reduction of over 99,360 lbs (U.S. EPA average emissions).

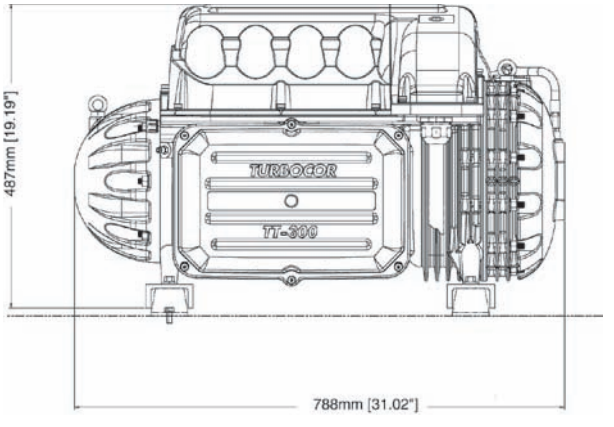

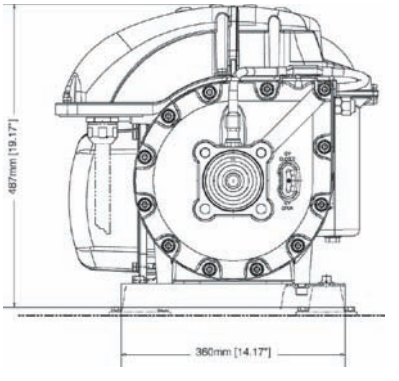

Length. . . . . 31.02" (788 mm)
Width . . . . . 20.40" (518 mm)
Height. . . . . 19.19" (487 mm)
Shipping weight. . . . . 265 lbs. (120 kg)
Refrigerant . . . . R-134a (R-22 for retrofit applications)
Sound. . . . . 70 dBA @5'

Danfoss Turbocor TT-300 Specifications

Construction shall utilize a two-stage, variable-speed centrifugal compressor design requiring no oil for lubrication. Compressor shall be constructed with cast aluminum casing and high-strength themoplastic electronics enclosures. The two-stage centrifugal impellers shall consist of cast and machined aluminum. The motor rotor and impeller assembly shall be the only major moving part. The compressor shall be designed for use with HFC-134a. (HCFC-22 is also approved for retrofit applications.)

The compressor should be provided with radial and axial magnetic bearings to levitate the shaft thereby eliminating metal to metal contact, and thus eliminating friction and the need for oil. The compressor shall have a variable frequency drive (VFD) for linear capacity modulation, high part-load efficiency and low in-rush starting current of less than 2 amps. In case of power failure, the compressor shall be capable of allowing for a normal de-levitation and shutdown. Capacity modulates infinitely as motor speed is varied across the range. Inlet guide vanes (IGV) shall be built-in to further trim the compressor capacity in conjunction with the variable-speed control, and to optimize compressor performance at low loads.

The compressor shall be provided with a direct drive, high efficiency permanent-magnet synchronous motor, powered by pulse width modulating (PWM) voltage supply. The motor shall be compatible with high-speed variable frequency operation that affords high speed efficiency, compactness, and soft start capability. Motor cooling shall be by liquid refrigerant injection.

The compressor shall include a microprocessor controller capable of controlling magnetic bearings and speed control. Controller shall be capable of providing monitoring including commissioning assistance, energy outputs, operation trends, and fault codes via a Modbus interface.

Danfoss TURBOCOR
Danfoss Turbocor Compressors Inc.
1769 Paul Dirac Drive, Tallahassee, FL 32310, USA
Phone: 850-504-4800 • Fax: 850-575-2126 • www.turbocor.com

The energy revolution

in air-conditioning and
refrigeration compressors

The Turbocor family of compressors

Danfoss
TURBOCOR

This award-winning technology is the proud recipient of the ASHRAE/AHR Expo Energy Innovation Award and represents the future of

21st-century compressor technology.

The Turbocor compressor is the world's first totally Oil-Free compressor specifically designed for the Heating, Ventilation, Air Conditioning and Refrigeration (HVACR) industry. The convergence of aerospace and industrially proven magnetic bearings, variable-speed centrifugal compression and digital electronic technologies enables the Turbocor family of compressors (nominal 60-150 ton capacity range) to achieve the highest compressor efficiencies, cost effectively, for middle-market, water-cooled, evaporative-cooled and air-cooled HVACR applications.

Magnetic bearings levitate the rotor shaft

Totally oil-free operation

High friction losses and the maintenance-intensive oil management hardware and controls associated with conventional oil-lubricated bearings are now totally eliminated by the utilization of modern magnetic bearing technology, enabling outstanding energy efficiency and reliable, long-life frictionless operation. The Turbocor compressor's one moving part (rotor shaft and impellers) is levitated during rotation by a digitally controlled magnetic bearing system consisting of two radial and one axial bearing. Position sensors at each magnetic bearing provide real-time repositioning of the motor rotor over six million times a minute insuring precise timing.

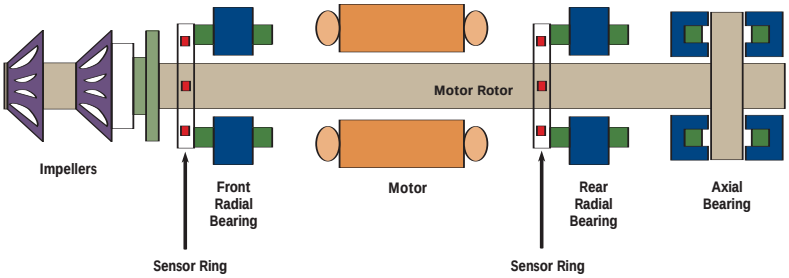

Variable-speed drive centrifugal compression

The well-proven energy performance advantages of variable-speed centrifugal chiller compressors are now brought to mainstream middle-market applications through the use of high-speed, two-stage centrifugal compression with integral variable-speed drive. Compressor speed is reduced as the condensing temperature and/or heat load reduces, optimizing energy performance through the entire operating range from 100% to 20% or below of rated capacity. Operation to near zero loads are achievable via an optional, digitally controlled, load balancing valve.

Onboard digital electronics

The world's first truly "smart" compressors, Danfoss Turbocor utilize on-board digital control electronics to proactively manage compressor operation while providing external control and web-enabled monitoring access to a full array of performance and reliability information. It also provides many of the control functions that have been previously performed by the power and control panels of the chiller or rooftop package, saving product costs.

The **Turbocor family** of compressors

Manufactured from aircraft grade aluminum castings with high strength thermoplastic electronics enclosures, the Turbocor compressor is a rugged workhorse, designed for long operating life.

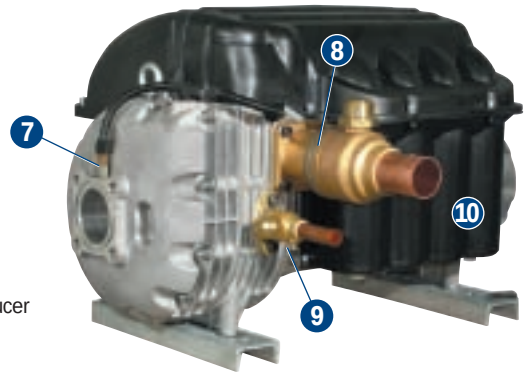

1 Power electronics enclosure
2 Main power wiring enclosure
3 Service enclosure (access to replaceable circuit board modules)
4 Lifting lugs
5 Suction connection
6 Mounting feet
7 Pressure/temperature transducer
8 Discharge connection
9 Economizer connection
10 Energy storage capacitors

Unprecedented energy efficiency

for middle-market applications

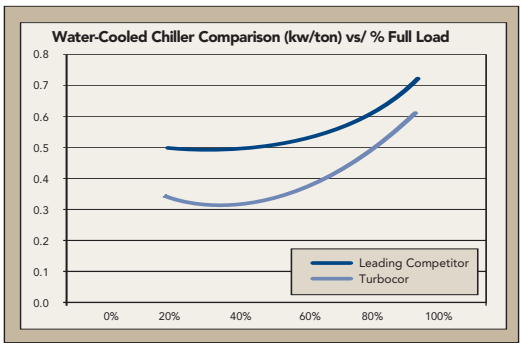

Chart 1

Outstanding energy savings from digitally controlled frictionless two-stage centrifugal compression means significant reductions in operating cost and environmental emissions associated with energy production.

Chart 1 shows the full and part load performance curve of the Turbocor compressor compared with a typical oil-flooded screw compressor on a 75-ton water-cooled chiller. The integrated part load values (IPLV) yields a 30% plus improvement in many applications.

Typical water-cooled chiller operating cost savings calculation

	Turbocor	Screw Compressor	Savings
IPLV kW/TR	0.41	0.63	0.22
Tons capacity	75	75	—
kW	30.75	47.25	16.5
Annual operating days	180	180	—
Operating hours per day	10	10	—
Total annual kWh	55,350	85,050	35,640
Power cost ($/kWh)	$0.10	$0.10	—
Annual operating cost	$5,535.00	$8,505.00	**$2,970.00**
2-year savings			**$5,940.00**
3-year savings			**$8,910.00**

Environmental Impact:
Extending this example, the 35,640-kWh energy savings through the use of a Turbocor compressor yields an **annual CO_2 emissions reduction of over 53,000 lbs** (U.S. EPA average emissions).

It's easy to gain the **energy advantage** in HVACR applications

Easy to work with

Designed for HVACR applications by HVACR engineers, the Turbocor compressor is virtually a "plug-and-play" solution. It features the same standard suction, discharge and economizer ports as conventional compressors. It mounts in the standard way. It can use the same power wiring with a single control and monitoring connection.

Easy on product cost — this frictionless magnetic bearing design needs no oil management system. And because there's no oil to coat the heat transfer surfaces, the unit's high efficiency can be maintained over the lifetime of the product. The outstanding efficiency of the Turbocor compressor gives equipment manufacturers the option to offer the highest efficiency/lowest emissions, cost effective performance in its tonnage range.

Easy on the ears — a sound level less than 70 dBA, with virtually no structure-borne vibration, eliminates the need for expensive attenuation accessories.

Easy to handle — 265 pounds (120 kg) is less than 20% of the weight of competitive compressors with an approximate 50% smaller footprint.

Easy refrigerant choice — since the Turbocor compressors are optimized for HFC-134a, a well known, environmentally responsible, refrigerant.

Easy to control — onboard digital electronics make the Turbocor compressor "the compressor" with a brain. Inside, the compressor is totally self-correcting and incorporates a system of sophisticated self-diagnostics, monitoring and control. Outside, you can tap into this intelligence by using control outputs in various forms—including web-enabled monitoring and control.

Easy on energy — the Turbocor compressor enables chiller and rooftop manufacturers to achieve the necessary product efficiency levels to meet and exceed ASHRAE 90.1 and the California Title 24 requirements for energy efficiency.

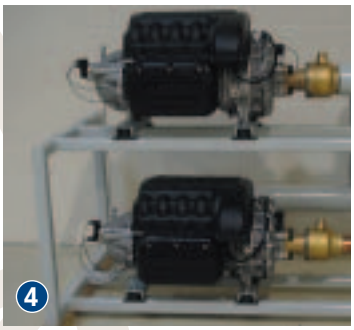

1 Water-cooled chiller applications
2 Rooftop and packaged system applications
3 Air-cooled chiller applications
4 Multiple compressor applications

Aerospace and industrially
proven technologies

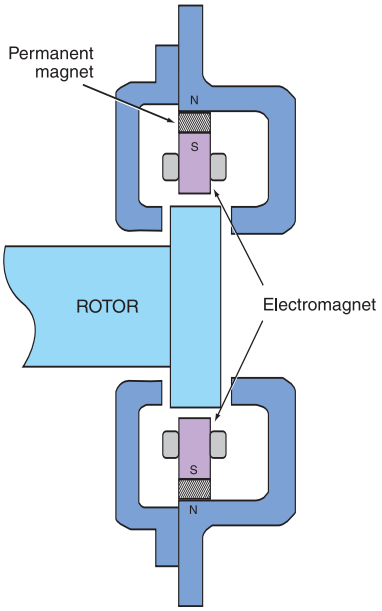

Cross-section of axial bearing

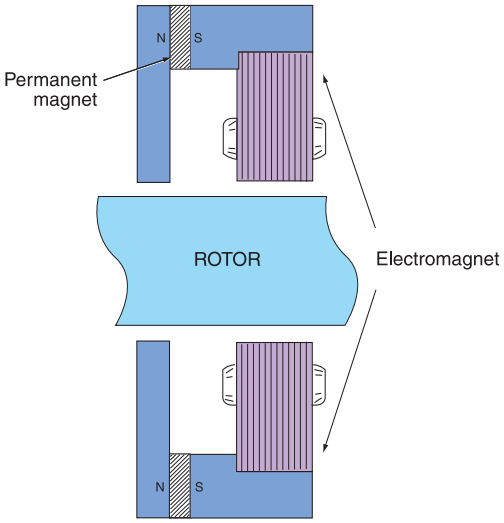

Cross-section of radial bearing

Mechanical components

1 Magnetic bearings and bearing sensors

- Composed of both permanent and electromagnets
- Enables precisely controlled frictionless compressor shaft rotation on a levitated magnetic cushion
- Bearing sensors, located at each magnetic bearing, feed back rotor orbit and thrust/axial information in real time to bearing control

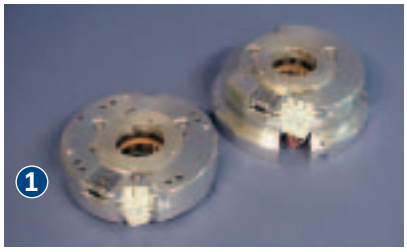

2 Permanent-magnet synchronous motor

- Powered by PWM (pulse width modulated) voltage supply
- High-speed variable frequency operation affords high efficiency, compactness and soft start capability

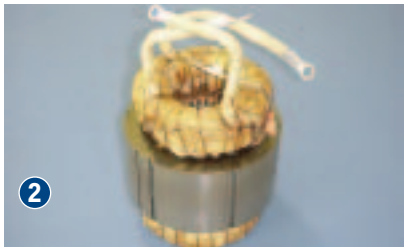

3 Touchdown bearings

- Carbon-lined radially and axially located bearings support the rotor when the compressor is not energized
- Prevents contact between the rotor and other metallic surfaces

4 Shaft and impellers

- Only one major moving compressor component
- Acts as rotor for permanent-magnet synchronous motor
- Impellers are keyed directly to the motor rotor

5 Compressor cooling

- Liquid refrigerant flow is controlled electronically, cooling electronic, mechanical and electromechanical compressor components to assure maximum efficiency and safe operation

6 Inlet guide vane assembly

- Trims compressor capacity and is digitally integrated with the variable-speed control, to optimize energy efficiency and compressor performance

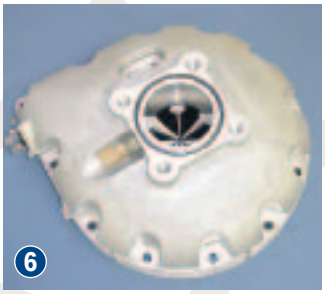

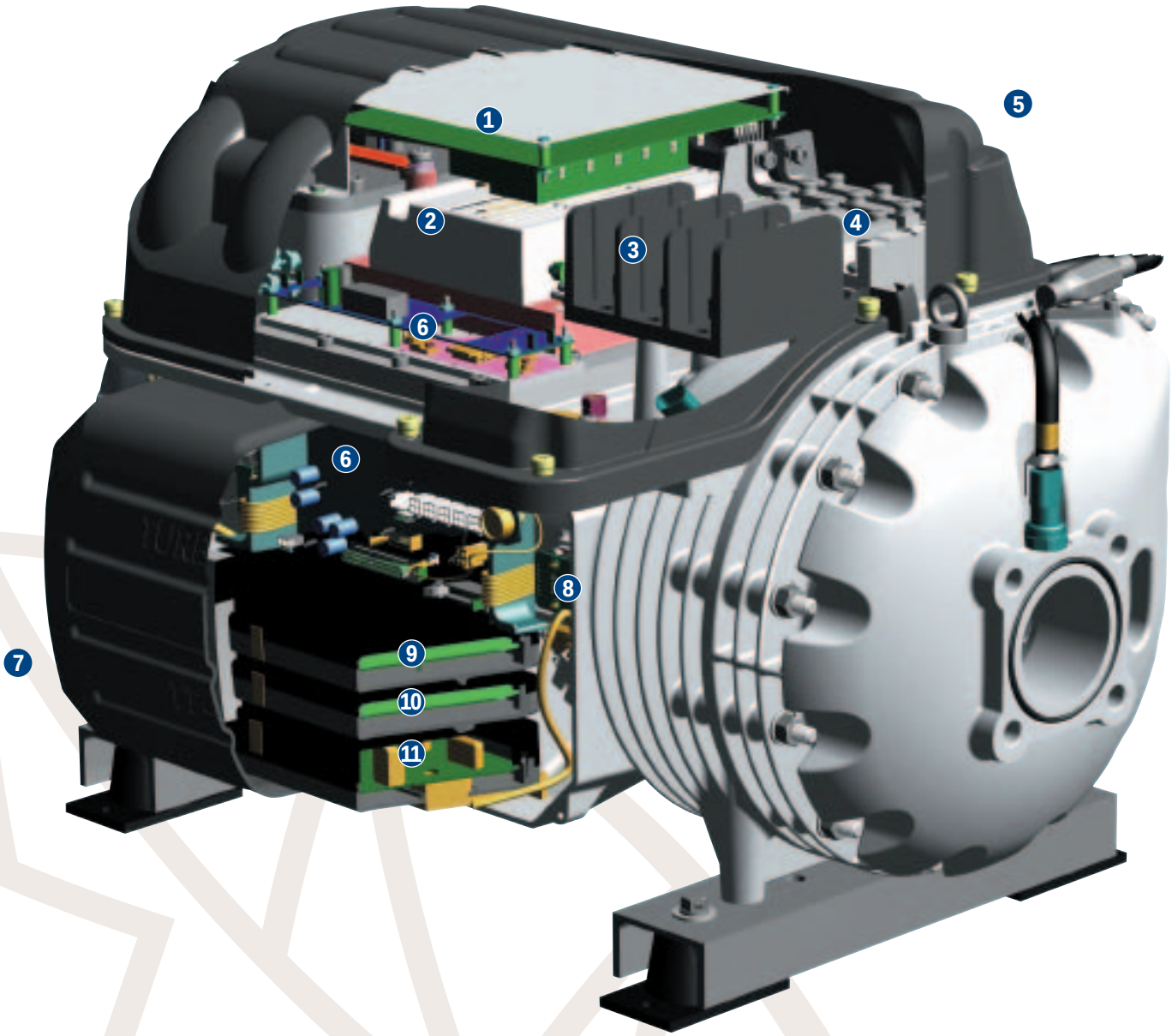

Electrical components

1 Soft start module

- Significantly reduces high in-rush current at startup
- The startup inrush current is only 2 amps vs typically up to 500-600 amps experienced by traditional screw compressors in this tonnage range – truly redefining soft starts

2 Variable frequency drive

- IGBT (Insulated Gate Bipolar Transistor) is an inverter that converts a DC voltage into an adjustable three-phase AC voltage
- Signals from the motor/bearing controller determine the inverter output frequency, voltage and phase, thereby regulating the motor speed
- Converts mechanical energy back into electrical energy. In case of power failure,

On board **digital electronics**

this patented control scheme allows for a normal de-levitation and shutdown

3 Three-phase terminal block
- Connection point for primary power supply

4 Rectifier
- Converts AC line power into a high-voltage DC power source for motor, bearings and control operations

5 Capacitors
- Energy storage and filter for smooth DC voltage
- Provide power to the magnetic bearings, along with motor rotation, to ensure rotor shaft levitation through compressor coastdown in the event of an external power loss

6 DC-DC converters
- Supplies and electrically isolates the high and low DC voltages required for the control circuits

7 Controls connection

Network connection for external control and monitoring

8 Bearing sensor feedthroughs
- Hermetically sealed connections enabling the transfer of power to the electromagnetic bearings and shaft position and rotation signals to the control modules

9 Driver Board/EXV Control

10 Compressor and bearing controller
- Central processor of the compressor system
- Continuously updated with critical data from the motor/bearing and external sensors that indicate the compressor and chiller/rooftop package operating status
- Software enabled, it responds to changing conditions and requirements to ensure optimum system performance
- Computes the required shaft position signals that control the magnetic bearings
- Processes motor current information to control motor speed

11 PWM amplifier
- Supplies power to the electromagnetic bearings

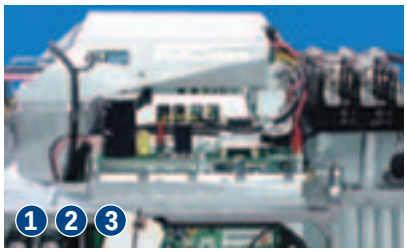

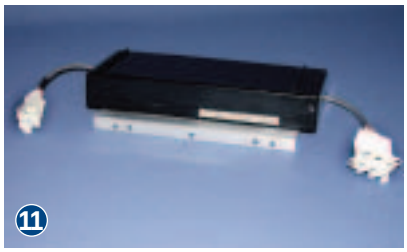

Variable Frequency Drives

ABB standard drives for HVAC applications

ACH550, 0.75 to 355 kW

Ready-to-play AC drive for HVAC

Every so often a product comes along that surpasses everyone's expectations. The ABB HVAC drive is such a product. As the first AC drive dedicated to the HVAC sector, over 100,000 have now been reliably installed in every continent of the world. And with no product failures or delivery issues, the ABB HVAC drive has become recognized as a world beater, winning awards in Italy and the USA for its outstanding engineering.

Maybe it is the simple user interface? Designed with the simplicity and intuitiveness of a mobile phone. Start-up of the drive could not be easier. Or it could be the built-in macros, as standard, for the most common applications. Selecting the application takes only seconds.

The drive is programmed with several HVAC applications, including supply and return fans, cooling tower fans, booster pumps and condensers. The intelligence within the HVAC control panel means that the user is given direct and understandable instructions in clear text at all times.

Harmonics and RFI emissions are major concerns within many HVAC installations. The ABB HVAC drive fulfils demanding requirements for electromagnetic compatibility. A swinging choke cuts harmonics emissions by up to 25%.

IEC EN ABB OK! ACH550 61000-3-12

A clean standard against dirty electricity - IEC/EN 61000-3-12

The ABB HVAC drive fulfils IEC/EN 61000-3-12. This European standard sets strict limits for harmonic currents produced by products connected to the electrical network.

Harmonic currents are forms of pollution on the electrical network. The harmonics can cause several undesired effects - flickering lights, failing computers and overheating of electrical equipment.

The new European standard IEC/EN 61000-3-12 has been approved and can be used. The ABB HVAC drive meets the requirements of the standard and carries manufacturer's written statement of compliance. This means security and simplicity for specifying engineers and facility managers. After a transition period the standard will become mandatory to all equipment installed after February 2008 which means that designers must consider it today.

Ambient temperature up to 50 °C in 24/7/365!

Ambient temperatures affect the output performance of each drive. The hotter it is outside - or inside the cabinet in which the drive is installed - the less current the drive can deliver. This means that the designer has to select the drive according to the peak temperature.

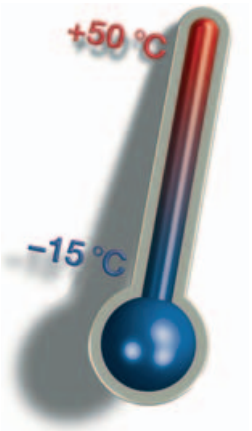

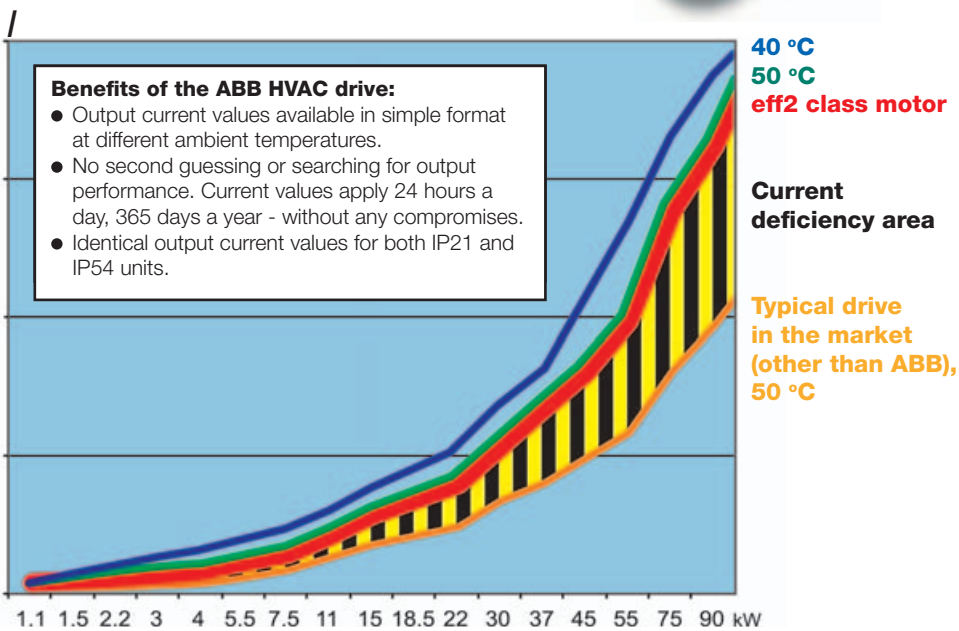

The figure shows output currents of the ABB HVAC drive at ambient temperatures of 40 °C and 50 °C. The thick red curve illustrates the required nominal motor current of ABB M2000 range eff2 motors, while the orange curve shows the output current of a typical drive (other than ABB) in the market.

- as standard!

Flange mounting
The ABB HVAC drive can be flange-mounted to the side of an air duct or integrated with an air handling unit (AHU). By placing the heat sink of the ABB HVAC drive in the air flow, additional cooling is achieved efficiently.

Flux optimization
With flux optimization, the magnitude of the flux varies depending on the actual load. This results in reduced energy consumption and lower noise levels. Silent operation functions further reduce noise in domestic applications.

Two PID controllers as standard
The ABB HVAC drive has two independent PID controllers built in. As an example: one PID controller works with the HVAC drive to maintain the duct static pressure. Simultaneously, the other PID controller can be used to control a separate external device, e.g. a chilled water valve. All of this can, of course, be monitored and controlled through serial communications.

Mounting side by side
The ABB HVAC drive is optimized for building into cabinets: no space is needed between the units, whether IP21 or IP54, even with the covers on.

Motor protection with PTC or PT 100.

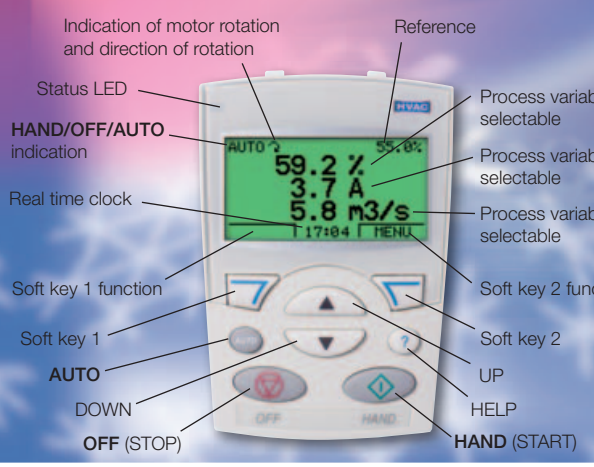

Snap-on options

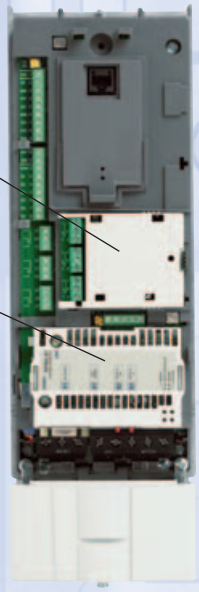

- Relay extension module for three additional outputs (module fits under the cover of the ABB HVAC drive).
- Fieldbus adapter modules (fit under the cover of the ABB HVAC drive) for LonWorks (LonMark approved), PROFIBUS, DeviceNet, etc.
- Control panel mounting kit for cabinet door mounting.
- Output filters, please contact ABB.

Inputs and outputs

The diagram below shows the inputs and outputs of the ABB HVAC drive. The sample connections are suitable for a number of HVAC applications like supply and return fans, condensers and booster pumps.

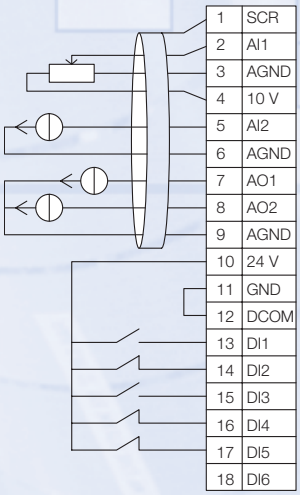

1	SCR	Signal cable shield (screen)
2	AI1	External reference 1: 0 (2) to 10 V or 0 (4) to 20 mA
3	AGND	Common for analog input circuit
4	10 V	Reference voltage 10 VDC
5	AI2	Actual signal 1: 0 (2) to 10 V or 0 (4) to 20 mA
6	AGND	Common for analog input circuit
7	AO1	Output frequency: 0 (4) to 20 mA
8	AO2	Output current: 0 (4) to 20 mA
9	AGND	Common for analog output circuit
10	24 V	Auxiliary voltage output +24 VDC
11	GND	Common for digital input return signals
12	DCOM	Digital input common for all digital inputs
13	DI1	Start/stop: activation starts the drive
14	DI2	Run enable: deactivation stops the drive
15	DI3	Constant speed 1
16	DI4	Start enable 1: deactivation stops the drive
17	DI5	Start enable 2: deactivation stops the drive
18	DI6	Not used
19	RO1C	Relay output 1
20	RO1A	Default operation
21	RO1B	Started => 19 connected to 21
22	RO2C	Relay output 2
23	RO2A	Default operation
24	RO2B	Running = > 22 connected to 24
25	RO3C	Relay output 3
26	RO3A	Default operation
27	RO3B	Fault (-1) => 25 connected to 27

- All inputs and outputs are short-circuit protected.
- All connectors are individually numbered, reducing possible causes of misunderstandings and errors.

Technical data and types

Technical specification

Mains connection

Voltage and power range	3-phase, 380 to 480 V, +10/-15% (0.75 to 355 kW) 3-phase, 208 to 240 V, +10/-15% (0.75 to 75 kW) 1-phase, 208 to 240 V, +10/-15% (50% derating) auto-identification of input line
Frequency	48 to 63 Hz
Power factor	0.98

Motor connection

Voltage	3-phase, from 0 to U_N
Frequency	0 to 500 Hz
Rated currents (apply to both IP21 and IP54)	
Current at ambient temperature of -15 to +40 °C: rated output current (I_{2N}), no derating needed Current at ambient temperature of +40 to +50 °C: derating of 1%/°C above 40 °C, max. derating 10%	
Switching frequency	selectable 0.75 to 37 kW: 1 kHz, 4 kHz, 8 kHz or 12 kHz 45 to 110 kW: 1 kHz, 4 kHz or 8 kHz 132 to 355 kW 1 kHz or 4 kHz

Environmental limits

Ambient temperature	
Transportation and storage	-40 to 70 °C
Operation	-15 to 50 °C (no frost allowed)
Altitude	
Output current	rated current available at 0 to 1000 m reduced by 1% per 100 m over 1000 to 2000 m
Relative humidity	lower than 95% (without condensation)
Protection classes	IP21 or IP54 IP21 for wall mounted and free standing units IP54 for wall mounted units

Inputs and outputs

2 analog inputs	selectable both for current and voltage
Voltage signal	0 (2) to 10 V, R_{in} > 312 kΩ single-ended
Current signal	0 (4) to 20 mA, R_{in} = 100 Ω single-ended
Potentiometer reference value	10 V ±2% max. 10 mA, R < 10 kΩ
2 analog outputs	0 (4) to 20 mA, load < 500 Ω
Internal auxiliary voltage	24 V DC ±10%, max. 250 mA
6 digital inputs	12 to 24 V DC with internal or external supply
3 relay outputs	Maximum switching voltage 250 V AC / 30 V DC Maximum continuous current 2 A rms
PTC and PT 100	Any of the 6 digital inputs or analog inputs can be configured for PTC. Both analog outputs can be used to feed the PT 100 sensor.
Fieldbuses	Inbuilt as standard (RS 485) BACnet, Modbus, N2 and FLN Available as plug-in options LonWorks, PROFIBUS, DeviceNet etc.

Protection functions

Overvoltage controller
Undervoltage controller
Earth-leakage supervision
Motor short-circuit protection
Output and input switch supervision
Overcurrent protection
Phase-loss detection (both motor & line)
Underload supervision - can be used also for belt-loss detection
Overload supervision
Stall protection

Product compliance

Harmonics	IEC/EN 61000-3-12
	Low Voltage Directive 73/23/EEC with supplements Machinery Directive 98/37/EC EMC Directive 89/336/EEC with supplements Quality assurance system ISO 9001 and Environmental system ISO 14001 CE, UL, cUL, and GOST R approvals Galvanic isolation according to PELV RoHS (Restriction of Hazardous Substances)
EMC (according to EN61800-3)	Class C2 (1st environment restricted distribution) as standard

Ratings, types and voltages

P_N kW	I_{2N} A	Frame size	Type code (order code)
U_N = 380 to 480 V (380, 400, 415, 440, 460, 480 V) HVAC control panel and EMC filter are included.			
0.75	2.4	R1	ACH550-01-02A4-4
1.1	3.3	R1	ACH550-01-03A3-4
1.5	4.1	R1	ACH550-01-04A1-4
2.2	5.4	R1	ACH550-01-05A4-4
3	6.9	R1	ACH550-01-06A9-4
4	8.8	R1	ACH550-01-08A8-4
5.5	11.9	R1	ACH550-01-012A-4
7.5	15.4	R2	ACH550-01-015A-4
11	23	R2	ACH550-01-023A-4
15	31	R3	ACH550-01-031A-4
18.5	38	R3	ACH550-01-038A-4
22	45	R3	ACH550-01-045A-4
30	59	R4	ACH550-01-059A-4
37	72	R4	ACH550-01-072A-4
45	87	R4	ACH550-01-087A-4
55	125	R5	ACH550-01-125A-4
75	157	R6	ACH550-01-157A-4
90	180	R6	ACH550-01-180A-4
110	205	R6	ACH550-01-195A-4
132	246	R6	ACH550-01-246A-4
160	289	R7	ACH550-02-289A-4
200	368	R8	ACH550-02-368A-4
250	486	R8	ACH550-02-486A-4
280	526	R8	ACH550-02-526A-4
315	602	R8	ACH550-02-602A-4
355	645	R8	ACH550-02-645A-4

I_{2N} = nominal output current. The ABB HVAC drive can deliver P_N continuously at an ambient temperature of 50 °C. In addition, 1,1 x I_{2N} overload is allowed for 1 minute every 10 minutes through the entire speed range.
P_N = typical motor power
U_N = nominal supply voltage

Dimensions and weights
Wall mounted units

Frame size	Dimensions and weights								
	IP21 / UL type 1					IP54 / UL type 12			
	H1 mm	H2 mm	W mm	D mm	Weight kg	H mm	W mm	D mm	Weight kg
R1	369	330	125	212	6.5	449	213	234	8.2
R2	469	430	125	222	9	549	213	245	11.2
R3	583	490	203	231	16	611	257	253	18.5
R4	689	596	203	262	24	742	257	284	26.5
R5	739	602	265	286	34	776	369	309	38.5
R6	880	700	300	400	69	924	410	423	80

Free standing units

R7	1507	N/A	250	520	115
R8	2024	N/A	347	617	230

N/A = not applicable

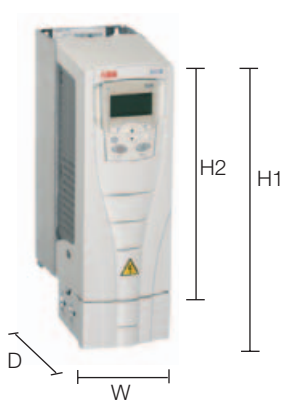

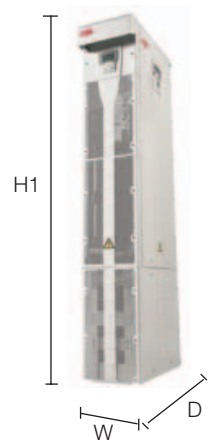

H1 = Height with cable connection box
H2 = Height without cable connection box
W = Width
D = Depth

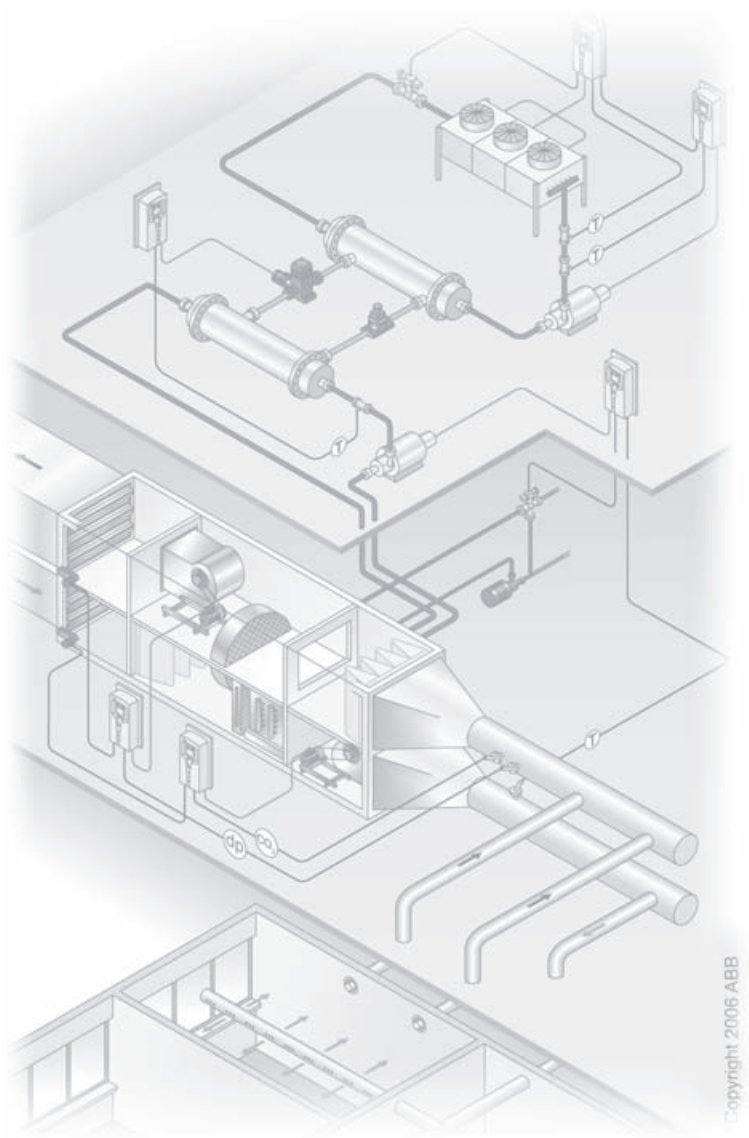

ABB Oy
Drives
P. O. Box 184
FI - 00381 Helsinki
Finland
Telephone +358 10 22 11
Telefax +358 10 222 2681
E-mail hvac@fi.abb.com
Internet www.abb.com/motors&drives

ABB Inc.
16250 W. Glendale Drive
New Berlin, WI 53151
Telephone +800 752 0696
Telefax +800 648 2072
Internet www.abb-drives.com

ABB Holdings Sdn. Bhd.
Lot 608, Jalan SS13/1K,
47500, Subang Jaya,
Selangor Darul Ehsan,
Malaysia
Telephone +603 5628 4888
Telefax +603 5631 2755

Ad agency Piirtek Oy #12360
HANSAPRINT/SAL07_00870/2007
441 024
Printed matter

© Copyright 2007 ABB. All rights reserved. 3AFE68295378 REV F EN 16.4.2007 Specifications subject to change without notice.

HITACHI
Inspire the Next

VARIABLE FREQUENCY DRIVE

L300P Series

for Fan and Pump Applications

Hitachi's L300P Series Variable Fre
Increased Energy Savings for Your

WIDE RANGE OF APPLICATION SPECIFIC FUNCTIONS

●AUTOMATIC ENERGY-SAVING FUNCTION

With its Automatic Energy-saving Function, the L300P delivers "real-time" energy-saving operation for your fan and pump applications. The function insures that motor operates at minimum current in response to the torque required by the load.

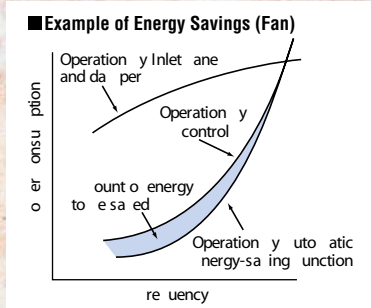

●ENHANCED INPUT/OUTPUT TERMINALS

Three relay output terminals are provided as standard for flexible interface to external control systems.

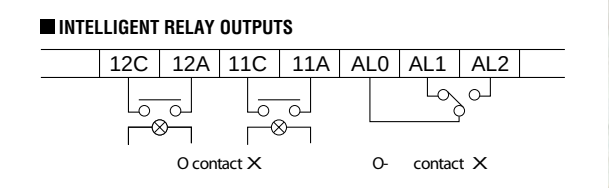

●ANALOG OUTPUT MONITOR

In addition to PWM monitor(FM), programmable analog output monitors are also available for both voltage(0−10VDC) and current(4−20mA) at AM and AMI terminals of the L300P.

●INTELLIGENT INPUT/OUTPUT TERMINAL SYSTEM

The L300P features an intelligent control terminal system, which allows necessary drive I/O functions to be freely programmed. Input terminals can be selected for either sink or source type logic.

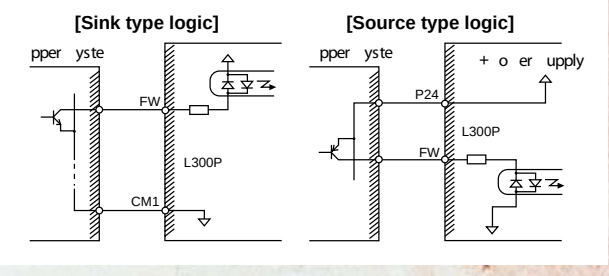

●EASY-TO-USE OPERATOR PANEL

L300P's digital operator panel supports various monitoring functions.

- Output frequency
- Output current
- Rotation direction
- Process variable, PID feedback
- Intelligent input terminal status
- Intelligent output terminal status
- Scaled output frequency
- Output voltage
- Power
- Cumulative RUN time
- Cumulative power-on time
- Trip event
- Trip history
- Warning code

quency Drive Delivers Fan and Pump Applications!

FOR OPTIMAL OPERATION

CONTENTS

FEATURES	1 – 4
STANDARD SPECIFICATIONS	5 – 7
DIMENSIONS	8 – 11
OPERATION and PROGRAMMING	12
FUNCTION LIST	13 – 16
TERMINALS	17 – 18
PROTECTIVE FUNCTIONS	19
CONNECTING DIAGRAM	20 – 21
CONNECTING TO PLC	22
WIRING and ACCESSORIES	23
ACCESSORIES	24 – 26
FOR COMPACT PANEL	27
TORQUE CHARACTERISTICS, DERATING DATA	28
FOR CORRECT OPERATION	29 – 30

ISO 14001
EC97J1095

ISO 9001
JQA-1153

Hitachi variable frequency drives (inverters) in this brochure are produced at the factory registered under the ISO 14001 standard for environmental management system and the ISO 9001 standard for inverter quality management system.

EASE OF MAINTENANCE

●EASY-REMOVABLE COOLING FAN AND DC BUS CAPACITOR

Cooling fan(s) and DC bus capaci-tors can be easily changed in the field. A fan ON/OFF function can be activated to provide longer cooling fan life.

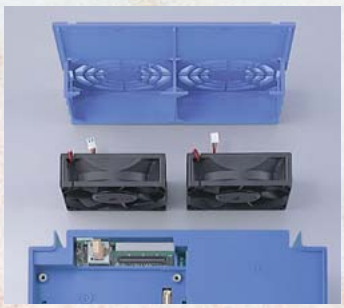

●REMOVABLE CONTROL CIRCUIT TERMINALS

Eliminates control rewiring when field replacing the L300P.

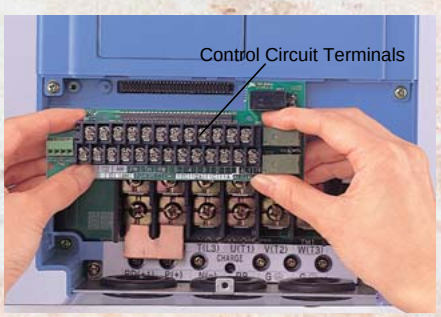

COMPACT DESIGN

The L300P's compact size helps economize panel space. Installation area is reduced by approximately 30% from that of our previous series.
(Comparison of 11kW (15HP))

USER-FRIENDLY OPERATION

●EASE OF OPERATION WITH DIGITAL OPERATOR (OPE-SR)

Output frequency can be controlled by the integral potentiometer provided as standard on the OPE-SR.
The OPE-SR can be removed for remote control, and has an easy-to-see 4-digit display and LEDs to indicate the unit being monitored (i.e. frequency, amps, power, etc.).
A multilingual operator (English, French, German, Italian, Spanish, and Portuguese) with copy function (SRW-0EX) and a digital operator without potentiometer (OPE-S) are also available as options.

●USER SELECTION OF COMMAND FUNCTIONS ("Quick Menu")

You can select frequently used commands and store them for fast reference.

●BUILT-IN RS485

RS485 is provided as standard for ASCII serial communication.

●PROGRAMMING SOFTWARE

Optional PC drive configuration software which runs on Windows® Operating System.

ENVIRONMENTAL FRIENDLINESS

●EMI FILTER

EMI filters to meet European EMC (EN61800-3, EN55011) and low-voltage directive (EN50178) are available for system conformance.

●REDUCED NOISE FROM MAIN CIRCUIT POWER SUPPLY AND CONTROL CIRCUIT POWER SUPPLY

Disturbance voltage of the main circuit power supply and of the control circuit power supply has been improved by approximately 15dB(μV) and 20dB(μV) respectively compared to our previous model(J300), resulting in significant reductions to noise interference with sensors and other peripheral devices.

- Disturbance voltage of the main circuit power supply
  (It does not comply with European EMC directive. To meet the EMC directive, please use an EMI filter.)

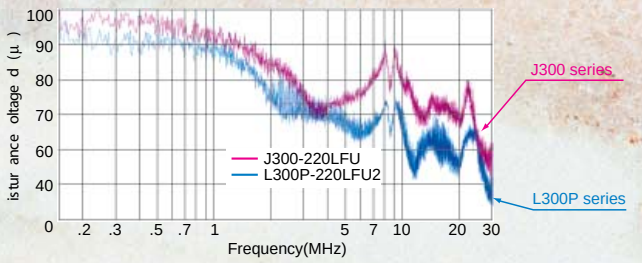

- Disturbance voltage of the control circuit power supply
  (Disturbance voltage of terminal L or CM1)

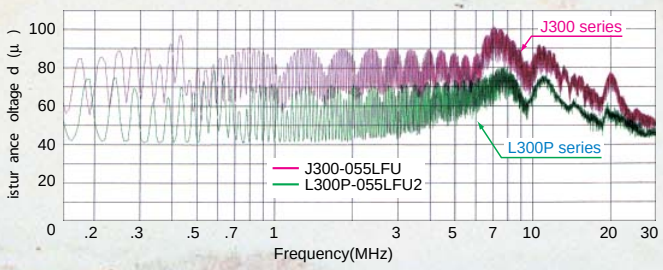

●HARMONICS MITIGATION

Terminals for the connection of a DC Reactor are provided as standard for harmonics suppression.

●CONTROL OF VOLTAGE OF MICRO SERGE

Suppressing the motor terminal voltage less than *2xE [V]* by improving the control method of PWM output.
Input voltage: 400VAC (In the case)
Motor terminal voltage: 1,131V(400V×$\sqrt{2}$×2)

●IMPROVEMENT OF ENVIRONMENT

The printed circuit board inside an inverter is varnish coating specification as standard.

PROTECTION FOR VARIOUS INSTALLATION ENVIRONMENTS

Standard enclosure protection for the L300P is IP20 (NEMA1*). For IP54 (NEMA12), please contact Hitachi sales office.

*NEMA 1 applies up to 30kW. An optional wire-entry conduit box is required for 37kW to 75kW models to meet NEMA 1 rating.

GLOBAL PERFORMANCE

●CONFORMITY TO GLOBAL STANDARDS

CE, UL, c-UL, C-Tick approvals.

●NETWORK COMPATIBILITY

The L300P can communicate with DeviceNet™, PROFIBUS®, LONWORKS®, Modbus® RTU*1, and Ethernet™*2 with communication options.

*1, *2: Being planned

■MODEL NAME INDICATION

L300P - 015 L F U 2

- Series Name
- Applicable Motor Capacity
- Power Source
  - L:3-phase 200V Class
  - H:3-phase 400V Class
- F:With Digital Operator
- U:UL version for North America
  E:CE version for Europe
- Version number

■MODEL CONFIGURATION

pplica le Motor apacity in ( )	-p ase class	-p ase class
1.5(2)	L300P-015LFU2	L300P-015HFU2/E2
2.2(3)	L300P-022LFU2	L300P-022HFU2/E2
3.7(5)	L300P-037LFU2	L300P-040HFU2/E2
5.5(7.5)	L300P-055LFU2	L300P-055HFU2/E2
7.5(10)	L300P-075LFU2	L300P-075HFU2/E2
11(15)	L300P-110LFU2	L300P-110HFU2/E2
15(20)	L300P-150LFU2	L300P-150HFU2/E2
18.5(25)	L300P-185LFU2	L300P-185HFU2/E2
22(30)	L300P-220LFU2	L300P-220HFU2/E2
30(40)	L300P-300LFU2	L300P-300HFU2/E2
37(50)	L300P-370LFU2	L300P-370HFU2/E2
45(60)	L300P-450LFU2	L300P-450HFU2/E2
55(75)	L300P-550LFU2	L300P-550HFU2/E2
75(100)	L300P-750LFU2	L300P-750HFU2/E2
90(125)		L300P-900HFU2/E2
110(150)		L300P-1100HFU2/E2
132(175)		L300P-1320HFU2/E2

- Windows is a registered trademark of Microsoft Corp. in the U.S. and other countries.
- DeviceNet is a trademark of Open DeviceNet Vendor Association.
- PROFIBUS is a registered trademark of Profibus Nutzer Organization.

STANDARD SPECIFICATIONS

Item			200V Class													
Model L300P-XXX	UL version		0 5 U	0 U	03 U	055 U	0 5 U	0 U	50 U	5 U	0 U	300 U	3 0 U	50 U	550 U	50 U
	CE version															
Enclosure (*2)			IP20 (NEMA 1) (*1)													
pplica le otor (-pole ( )) ( )			.5( )	. (3)	3. (5)	5.5(.5)	.5(0)	(5)	5(0)	.5(5)	(30)	30(0)	3 (50)	5(0)	55(5)	5(00)
Rated capacity ( )	200V		.5	3.	5.	.3		5.	0.0	5.	.	3 .	.	5 .5	.	3.5
	240V		3.	.3	.	.	3.3	.	.	30.3	35.3	.	5 .	0.	.	.
Rated input voltage			3-phase (3-wire) 200−240V (±10%), 50/60Hz													
Rated input current (A)			.3				35			0			5		3	
Re uired po er supply capacity ( )			3	.	.		5		30	3		0		0	0	50
Rated output voltage (*4)			3-phase (3-wire) 200−240V (Corresponding to input voltage)													
Rated output current (continuous)( )			.5	0.5	.5		3		5	3	5	3	0		0	0
Control method			Line to line sine wave PWM													
Output re uency range ( )			0.1−400Hz													
Frequency accuracy			Digital: ±0.01% of the maximum frequency, Analog: ±0.2%(25±10℃)													
Frequency resolution			i ital ettin 0.0 nalo ettin (Ma i re en) 000 (ter inal it 0 0 ter inal it 0 0)													
V/f characteristics			V/f optionally variable, V/f control (Constant torque, reduced torque)													
Overload capacity			120% for 60sec., 150% for 0.5sec.													
cceleration deceleration ti e			0.01−3,600sec. (Linear/curve, accel./decel. selection), Two-stage accel./decel.													
Braking	Dynamic braking (Short-time) (*6)		Built-in BRD circuit(optional resistor)							External dynamic braking unit (option)						
	DC braking		Performs at start; under set frequency at deceleration, or via an external input (braking force, time, and operating frequency).													
Input signal	re uency setting	Operator	Up and Down keys													
		otentio eter	Potentiometer													
		ternal signal	DC 0−10V, —10−+10V (input impedance 10kΩ), 4−20mA (input impedance 100Ω)													
		ternal port	RS-485 interface													
	or ard re erse tart stop	Operator	Run key/Stop key (FW/RV can be set by function command.)													
		ternal signal	FW RUN/STOP (NO contact), RV set by terminal assignment (NO/NC selection), 3-wire input available													
		ternal port	Set by RS-485													
	Intelligent input terminals (Assign five functions to terminals)		RV(Reverse), CF1-CF4(Multispeed command), JG(Jogging), DB(External DC braking), SET(Second motor constants setting), 2CH(Second accel./decel.), FRS(Free-run stop), EXT(External trip), USP(Unattended start protection), CS(Change to/from commercial power supply),SFT(Software lock), AT(Analog input selection), RS(Reset), STA(3-wire start), STP(3-wire stop), F/R(3-wire fwd./rev.), PID(PID On/Off), PIDC(PID reset), UP/DWN(Remote-controlled accel./decel.) UDC(Remote-controlled data clearing), SF1-SF7(Multispeed bit command 1-7), OLR(Overload limit change), ROK(RUN Permissive) and NO(Not selected)													
	Thermistor input		One terminal(PTC)													
Output signal	Intelligent output ter inals		Assign three functions to two NO contacts and one NO-NC combined contact (RUN, FA1, FA2, OL, OD, AL, FA3, IP, UV, RNT, ONT RMD and THM)													
	Intelligent onitor output ter inals		Analog voltage, analog current, PWM output													
Display monitor			Output frequency, output current, scaled value of output frequency, trip history, I/O terminal condition, input power, output voltage													
Other user-settable parameters			V/f free-setting (up to 7 points), frequency upper/lower limit, frequency jump, accel./decel. curve selection, manual torque boost value and frequency adjustment, analog meter tuning, starting frequency, carrier frequency, electronic thermal protection level, external frequency output zero/span reference, external frequency input bias start/end, analog input selection, retry after trip, reduced voltage soft start, overload restriction, automatic energy-saving													
Carrier frequency range			0.5−12kHz													
Protective functions			Over-current protection, overload protection, braking resistor overload protection, over-voltage protection, EEPROM error, under-voltage error, CT(Current transformer) error, CPU error, external trip, USP error, ground fault, input over-voltage protection, instantaneous power failure, option 1 connection error, option 2 connection error, inverter thermal trip, phase failure detection, IGBT error, thermistor error													
n iron ental conditions	ient operating storage te perature( ) u idity		—10−40℃(*9) / —20−65℃ / 25−90%RH (No condensation)													
	Vibration (*8)		5.9m/s² (0.6G), 10−55Hz										2.9m/s² (0.3G), 10−55Hz			
	Location		Altitude 1,000m or less, indoors (no corrosive gases or dust)													
Color			Blue										ra (Be el or i ital o erator i l e)			
Options			EMI filters, input/output reactors, DC reactors, radio noise filters, braking resistors, braking units, LCR filter, communication cables, Network interface cards													
Operator			OPE-SR(4-digit LED with potentiometer) / OPE-SRE(4-digit LED with potentiometer, English overlay) Optional: OPE-S(4-digit LED), SRW-0EX(Multilingual (English,French, German, Italian, Spanish, and Portuguese) operator with copy function), ICS-1,3(Cable for operators(1m, 3m))													
Weight kg (lbs.)			3.5 (.)	3.5 (.)	3.5 (.)	3.5 (.)	5 ( )	5 ( )	5 ( )	(.)	(.)	(.)	0 ( )	30 ( )	30 ( )	50 (0)

1: U to 30 .
n o tional on it o i re ire or 3 to 55 to eet EM .
2: he rote tion etho on or to EM 030 EM (U. .).
3: he a li a le otor re er to ita hi tan ar 3 ha e otor (ole).
o e other otor are t e ta en to re ent the rate otor rrent (50) ro e ee in the rate o t t rrent o the in erter.
4: he o t t olta e e rea e a the ain o er l olta e e rea e e e t or the e o R n tion.
5: o o erate the otor e on 50 0 lea e on lt ith the otor an a t rera o t the a i allo a le rotation ee .
6: Bra in re i tor i not inte rate in the in erter. Plea e in tall o tional ra in re i tor or na i ra in nit hen lar e ra in tor e i re ire .
7: tora e te erat re re er to the te erat re in tran ortation.
8: on or to the te t etho e i ie in l 00 0( ).
9: hen in the in erter ro 0 to 50 a ient the o t t rrent o the in erter t e erate (ee the ne t e tion on eratin re).

Item			400V Class									
Model L300P-XXX	UL version		015HFU2	022HFU2	040HFU2	055HFU2	075HFU2	110HFU2	150HFU2	185HFU2	220HFU2	300HFU2
	CE version		015HFE2	022HFE2	040HFE2	055HFE2	075HFE2	110HFE2	150HFE2	185HFE2	220HFE2	300HFE2
Enclosure (*2)			IP20 (NEMA 1) (*1)									
pplica le otor (-pole ( )) ( )			1.5(2)	2.2(3)	4.0(5)	5.5(7.5)	7.5(10)	11(15)	15(20)	18.5(25)	22(30)	30(40)
Rated capacity ( )	400V		2.6	3.6	5.9	8.3	11	15.2	20.0	25.6	29.7	39.4
	480V		3.1	4.4	7.1	9.9	13.3	18.2	24.1	30.7	35.7	47.3
Rated input voltage			3-phase (3-wire) 380−480V (±10%), 50/60Hz									
Rated input current (A)			4.2	5.8	9.5	13	18	24	32	41	47	63
Re uired po er supply capacity ( )			3	4.4	8	11	15	22	30	37	44	60
Rated output voltage (*4)			3-phase (3-wire) 380−480V (Corresponding to input voltage)									
Rated output current (continuous) ( )			3.8	5.3	8.6	12	16	22	29	37	43	57
Control method			Line to line sine wave PWM									
Output re uency range ( )			0.1−400Hz									
Frequency accuracy			Digital: ±0.01% of the maximum frequency, Analog: ±0.2%(25±10℃)									
Frequency resolution			i ital ettin 0.0 nalo ettin (Ma i re en) 000 (ter inal it 0 0 ter inal it 0 0)									
V/f characteristics			V/f optionally variable, V/f control (Constant torque, reduced torque)									
Overload capacity			120% for 60sec., 150% for 0.5sec.									
cceleration deceleration ti e			0.01−3,600sec. (Linear/curve, accel./decel. selection), Two-stage accel./decel.									
Braking	Dynamic braking (Short-time) (*6)		Built-in BRD circuit(optional resistor)							External dynamic braking unit (option)		
	DC braking		Performs at start; under set frequency at deceleration, or via an external input (braking force, time, and operating frequency).									
Input signal	re uency setting	Operator	Up and Down keys									
		otentio eter	Potentiometer									
		ternal signal	DC 0−10V, —10−+10V (input impedance 10kΩ), 4−20mA (input impedance 100Ω)									
		ternal port	RS-485 interface									
	or ard re erse tart stop	Operator	Run key/Stop key (FW/RV can be set by function command.)									
		ternal signal	FW RUN/STOP (NO contact), RV set by terminal assignment (NO/NC selection), 3-wire input available									
		ternal port	Set by RS-485									
	Intelligent input terminals (Assign five functions to terminals)		RV(Reverse), CF1-CF4(Multispeed command), JG(Jogging), DB(External DC braking), SET(Second motor constants setting), 2CH(Second accel./decel.), FRS(Free-run stop), EXT(External trip), USP(Unattended start protection), CS(Change to/from commercial power supply),SFT(Software lock), AT(Analog input selection), RS(Reset), STA(3-wire start), STP(3-wire stop), F/R(3-wire fwd./rev.), PID(PID On/Off), PIDC(PID reset), UP/DWN(Remote-controlled accel./decel.) UDC(Remote-controlled data clearing), SF1-SF7(Multispeed bit command 1-7), OLR(Overload limit change), ROK(RUN Permissive) and NO(Not selected)									
	Thermistor input		One terminal(PTC)									
Output signal	Intelligent output ter inals		Assign three functions to two NO contacts and one NO-NC combined contact (RUN, FA1, FA2, OL, OD, AL, FA3, IP, UV, RNT, ONT RMD and THM)									
	Intelligent onitor output ter inals		Analog voltage, analog current, PWM output									
Display monitor			Output frequency, output current, scaled value of output frequency, trip history, I/O terminal condition, input power, output voltage									
Other user-settable parameters			V/f free-setting (up to 7 points), frequency upper/lower limit, frequency jump, accel./decel. curve selection, manual torque boost value and frequency adjustment, analog meter tuning, starting frequency, carrier frequency, electronic thermal protection level, external frequency output zero/span reference, external frequency input bias start/end, analog input selection, retry after trip, reduced voltage soft start, overload restriction, automatic energy-saving									
Carrier frequency range			0.5−12kHz									
Protective functions			Over-current protection, overload protection, braking resistor overload protection, over-voltage protection, EEPROM error, under-voltage error, CT(Current transformer) error, CPU error, external trip, USP error, ground fault, input over-voltage protection, instantaneous power failure, option 1 connection error, option 2 connection error, inverter thermal trip, phase failure detection, IGBT error, thermistor error									
n iron ental conditions	ient operating storage te perature( ) u idity		—10−40℃(*9) / —20−65℃ / 25−90%RH (No condensation)									
	Vibration (*8)		5.9m/s² (0.6G), 10−55Hz									
	Location		Altitude 1,000m or less, indoors (no corrosive gases or dust)									
Color			Blue									
Options			EMI filters, input/output reactors, DC reactors, radio noise filters, braking resistors, braking units, LCR filter, communication cables, Network interface cards									
Operator			OPE-SR(4-digit LED with potentiometer) / OPE-SRE(4-digit LED with potentiometer, English overlay) Optional: OPE-S(4-digit LED), SRW-0EX(Multilingual (English,French, German, Italian, Spanish, and Portuguese) operator with copy function), ICS-1,3(Cable for operators(1m, 3m))									
Weight kg (lbs.)			3.5 (.)	3.5 (.)	3.5 (.)	3.5 (.)	5 ( )	5 ( )	5 ( )	(.)	(.)	(.)

1: U to 30 .
n o tional on it o i re ire or 3 to 55 to eet EM .
2: he rote tion etho on or to EM 030 EM (U. .).
3: he a li a le otor re er to ita hi tan ar 3 ha e otor (ole).
o e other otor are t e ta en to re ent the rate otor rrent (50) ro e ee in the rate o t t rrent o the in erter.
4: he o t t olta e e rea e a the ain o er l olta e e rea e e e t or the e o R n tion.
5: o o erate the otor e on 50 0 lea e on lt ith the otor an a t rer a o t the a i allo a le rotation ee .
6: Bra in re i tor i not inte rate in the in erter. Plea e in tall o tional ra in re i tor or na i ra in nit hen lar e ra in tor e i re ire .
7: tora e te erat re re er to the te erat re in tran ortation.
8: on or to the te t etho e i ie in l 00 0( ).
9: hen in the in erter ro 0 to 50 a ient the o t t rrent o the in erter t e erate (ee the ne t e tion on eratin r e).

STANDARD SPECIFICATIONS

Item			400V Class						
Model L300P-XXX		UL version	370HFU2	450HFU2	550HFU2	750HFU2	900HFU2	1100HFU2	1320HFU2
		CE version	370HFE2	450HFE2	550HFE2	750HFE2	900HFE2	1100HFE2	1320HFE2
Enclosure (*2)			IP20 (NEMA 1) (*1)				IP00		
pplica le otor (-pole ( )) ( )			37(50)	45(60)	55(75)	75(100)	90 (125)	110 (150)	132 (175)
Rated capacity ( )		400V	48.4	58.8	72.7	93.5	110.8	135.0	159.3
		480V	58.1	70.1	87.2	112.2	133.0	162.1	191.2
Rated input voltage			3-phase (3-wire) 380−480V (±10%), 50/60Hz						
Rated input current (A)			77	94	116	149	176	215	253
Re uired po er supply capacity ( )			74	90	110	150	180	220	264
Rated output voltage (*4)			3-phase (3-wire) 380-480V (Corresponding to input voltage)						
Rated output current (continuous) ( )			70	85	105	135	160	195	230
Control method			Line to line sine wave PWM						
Output re uency range ( )			0.1−400Hz						
Frequency accuracy			Digital: ±0.01% of the maximum frequency, Analog: ±0.2%(25±10℃)						
Frequency resolution			i ital ettin 0.0 nalo ettin (Ma i re en) 000 (ter inal it 0 0 ter inal it 0 0)						
V/f characteristics			V/f optionally variable, V/f control (Constant torque, reduced torque)						
Overload capacity			120% for 60sec., 150% for 0.5sec.						
cceleration deceleration ti e			0.01−3,600sec. (Linear/curve, accel./decel. selection), Two-stage accel./decel.						
Braking	Dynamic braking (Short-time) (*6)		External dynamic braking unit (option)						
	DC braking		Performs at start; under set frequency at deceleration, or via an external input (braking force, time, and operating frequency).						
Input signal	re uency setting	Operator	Up and Down keys						
		otentio eter	Potentiometer						
		ternal signal	DC 0−10V, —10−+10V (input impedance 10kΩ), 4−20mA (input impedance 100Ω)						
		ternal port	RS-485 interface						
	or ard re erse tart stop	Operator	Run key/Stop key (FW/RV can be set by function command.)						
		ternal signal	FW RUN/STOP (NO contact), RV set by terminal assignment (NO/NC selection), 3-wire input available						
		ternal port	Set by RS-485						
	Intelligent input terminals (Assign five functions to terminals)		RV(Reverse), CF1-CF4(Multispeed command), JG(Jogging), DB(External DC braking), SET(Second motor constants setting), 2CH(Second accel./decel.), FRS(Free-run stop), EXT(External trip), USP(Unattended start protection), CS(Change to/from commercial power supply),SFT(Software lock), AT(Analog input selection), RS(Reset), STA(3-wire start), STP(3-wire stop), F/R(3-wire fwd./rev.), PID(PID On/Off), PIDC(PID reset), UP/DWN(Remote-controlled accel./decel.) UDC(Remote-controlled data clearing), SF1-SF7(Multispeed bit command 1-7), OLR(Overload limit change), ROK(RUN Permission) and NO(Not selected)						
	Thermistor input		One terminal(PTC)						
Output signal	Intelligent output ter inals		Assign three functions to two NO contacts and one NO-NC combined contact (RUN, FA1, FA2, OL, OD, AL, FA3, IP, UV, RNT, ONT, RMD and THM)						
	Intelligent onitor output ter inals		Analog voltage, analog current, PWM output						
Display monitor			Output frequency, output current, scaled value of output frequency, trip history, I/O terminal condition, input power, output voltage						
Other user-settable parameters			V/f free-setting (up to 7 points), frequency upper/lower limit, frequency jump, accel./decel. curve selection, manual torque boost value and frequency adjustment, analog meter tuning, starting frequency, carrier frequency, electronic thermal protection level, external frequency output zero/span reference, external frequency input bias start/end, analog input selection, retry after trip, reduced voltage soft start, overload restriction, automatic energy-saving						
Carrier frequency range			0.5−12kHz				0.5−8kHz		
Protective functions			Over-current protection, overload protection, braking resistor overload protection, over-voltage protection, EEPROM error, under-voltage error, CT(Current transformer) error, CPU error, external trip, USP error, ground fault, input over-voltage protection, instantaneous power failure, option 1 connection error, option 2 connection error, inverter thermal trip, phase failure detection, IGBT error, thermistor error						
n iron ental conditions	ient operating storage te perature( ) u idity		—10−40℃(*9) / —20−65℃ / 25−90%RH (No condensation)						
	Vibration (*8)		2.9m/s² (0.3G), 10−55Hz						
	Location		Altitude 1,000m or less, indoors (no corrosive gases or dust)						
Color			Gray (Bezel for digital operator is blue)						
Options			EMI filters, input/output reactors, DC reactors, radio noise filters, braking resistors, braking units, LCR filter, communication cables, Network interface cards						
Operator			OPE-SR(4-digit LED with potentiometer) / OPE-SRE(4-digit LED with potentiometer, English overlay) Optional: OPE-S(4-digit LED), SRW-0EX(Multilingual (English,French, German, Italian, Spanish, and Portuguese) operator with copy function), ICS-1,3(Cable for operators(1m, 3m))						
Weight kg (lbs.)			20 (44)	30 (66)	30 (66)	30 (66)	60 (132)	60 (132)	80 (176)

1: U to 30 . n o tional on it o i re ire or 3 to 55 to eet EM .
2: he rote tion etho on or to EM 030 EM (U. .).
3: he a li a le otor re er to ita hi tan ar 3 ha e otor (ole). o e other otor are t e ta en to re ent the rate otor rrent (50) ro e ee in the rate o t t rrent o the in erter.
4: he o t t olta e e rea e a the ain o er l olta e e rea e e e t or the e o R n tion.
5: o o erate the otor e on 50 0 lea e on lt ith the otor an a t rera o t the a i allo a le rotation ee .
6: Bra in re i tor i not inte rate in the in erter. Plea e in tall o tional ra in re i tor or na i ra in nit hen lar e ra in tor e i re ire .
7: tora e te erat re re er to the te erat re in tran ortation.
8: on or to the te t etho e i ie in l 00 0( ).
9: hen in the in erter ro 0 to 50 a ient the o t t rrent o the in erter t e erate (ee the ne t e tion on eratin re).

Appendix F

Consultant Field Data Sheets

Building Usage Hours

Administration 1st Floor Usage hours

	Weekdays (Mon-Fri)			Weekends (Sat-Sun)			
Room Type	Hrs/Day	Days/Yrs	Sub-Total	Hrs/Day	Days/Yr	Sub-Total	TOTAL
Commons	18	260	4680	7	52	364	5044
Conference Room	12	260	3120	7	52	364	3484
Copy Room	12	260	3120	7	52	364	3484
Hallway	18	260	4680	7	52	364	5044
Lounge	18	260	4680	7	52	364	5044
Open Office	18	260	4680	7	52	364	5044
Private Office	15	260	3900	7	52	364	4264
Reception	18	260	4680	7	52	364	5044

Administration 2nd Floor Usage hours

	Weekdays (Mon-Fri)			Weekends (Sat-Sun)			
Room Type	Hrs/Day	Days/Yrs	Sub-Total	Hrs/Day	Days/Yr	Sub-Total	TOTAL
Commons	18	260	4680	7	52	364	5044
Conference Room	12	260	3120	7	52	364	3484
Copy Room	12	260	3120	7	52	364	3484
Hallway	18	260	4680	7	52	364	5044
Library	15	260	3900	7	52	364	4264
Open Office	18	260	4680	7	52	364	5044
Private Office	15	260	3900	2.5	52	130	4030
Reception	18	260	4680	24	52	1248	5928

Operation and Maintenance – Office Building

	Weekdays (Mon-Fri)			Weekends (Sat-Sun)			
Room Type	Hrs/Day	Days/Yrs	Sub-Total	Hrs/Day	Days/Yr	Sub-Total	TOTAL
Commons	13.5	260	3510	7	52	364	3874
Conference Room	10.5	260	2730	5	52	260	2990
Hallway	13.5	260	3510	7	52	364	3874
Open Office	12.5	260	3250	7	52	364	3614
Private Office	11	260	2860	7	52	364	3224
Reception	13.5	260	3510	7	52	364	3874
Restroom	12	260	3120	5	52	260	3380
Storage	6	260	1560	2	52	104	1664

Operation and Maintenance – Workshops

	Weekdays (Mon-Fri)			Weekends (Sat-Sun)			
Room Type	Hrs/Day	Days/Yrs	Sub-Total	Hrs/Day	Days/Yr	Sub-Total	TOTAL
Open Office	12.5	260	3250		0	0	3250
Private Office	12.5	260	3250		0	0	3250
Restroom	12.5	260	3250		0	0	3250
Storage	12.5	260	3250		0	0	3250
Warehouse	12.5	260	3250		0	0	3250
Workshop	12.5	260	3250		0	0	3250

Utility Rate Analysis

Simulation based on Existing Utility Rates

Rate Simulation Summary

Comment:

Rate Simulation is a tool used to determine a facility's present-day electricity rate ($/kWh) by means of (a) recently published (prevailing) utility rates and (b) a facility's historical energy use. Resulting rates are used in the payback analysis of proposed projects presented in this study. In the simulation, an "Energy Only Rate" and an "Effective Electricity Rate" are calculated. The "Energy Only Rate" excludes demand charges (if any), whereas the "Effective Rate" includes demand charges. "Energy Only Rates" are utilized in 'Non-Demand-Saving' projects such as occupancy sensors; "Effective Rates" are utilized in 'Demand Saving' projects such as lighting conversions and HVAC unit replacements.

Site/Meter #	Rate(s)	Energy Use (kWh)	% of Total Energy Use	Energy Cost ($)	Total Cost ($)	Energy Rate ($/kWh)	Effective Rate ($/kWh)
EMWD - V349E-005334 (Chiller Load)	TOU-GS-3-B	542,637	21.1%	$ 51,318	$ 81,176	$0.095	$0.150
EMWD - V345N-001191 (Building Load)	TOU-8-STANDBY	2,029,556	78.9%	$ 170,733	$ 283,270	$0.084	$0.140
Total	**-**	**2,572,193**	**-**	**$ 222,051**	**$ 364,446**	**$0.086**	**$0.142**

Rate TOU-GS-3-B *Applicability:* Registering demands from 200 kW through 500 kW

	Delivery	Generation	
Energy Rate	Total	URG	DWR
Summer - On Peak ($/kWh)	$0.01998	$0.30378	$0.0376
Mid Peak	$0.01998	$0.13011	$0.0376
Off Peak	$0.01998	$0.05864	$0.0376
Winter - On Peak		-	-
Mid Peak	$0.01998	$0.06413	$0.0376
Off Peak	$0.01998	$0.04467	$0.0376
RATES EFFECTIVE:	March 30, 2010		

	Delivery			Generation	
Demand Rate	Trans	Distr	Total	URG	GWR
Summer - On Peak ($/kW)	$0.00	$0.00	$0.00	$0.00	-
Mid Peak	$0.00	$0.00	$0.00	$0.00	-
Off Peak	$0.00	$0.00	$0.00	$0.00	-
Winter - On Peak	-	-	-	-	-
Mid Peak	$0.00	$0.00	$0.00	$0.00	-
Off Peak	$0.00	$0.00	$0.00	$0.00	-
Facilities Demand ($/kW)	$2.61	$10.48	$13.09	$0.00	-

Facility: **Eastern Municipal Water District (Chiller Load)**

SCV Account #:

		Energy Use (kWh)					Demand (kW)						Delivery Charges		Generation Charges		
Period		Summer On Peak	Summer Mid Peak	Summer Off Peak	Winter Mid Peak	Winter Off Peak	Max kW	Summer On Peak	Summer Mid Peak	Summer Off Peak	Winter Mid Peak	Winter Off Peak	Energy Charge ($)	Facilities Demand Charge ($)	DWR: Energy Charge ($)	SCE: Energy Charge ($)	Seasonal Demand Charge ($)
W	Dec-08	0	0	0	17,847	21,624	164	0	0	0	0	0	$789	$2,147	$401	$1,541	$0
W	Jan-09	0	0	0	18,225	21,089	175	0	0	0	0	0	$785	$2,291	$399	$1,541	$0
W	Feb-09	0	0	0	20,819	22,000	182	0	0	0	0	0	$856	$2,382	$435	$1,692	$0
W	Mar-09	0	0	0	26,598	19,657	223	0	0	0	0	0	$924	$2,919	$470	$1,886	$0
W	Apr-09	0	0	0	23,023	21,729	207	0	0	0	0	0	$894	$2,710	$455	$1,786	$0
W	May-09	216	406	451	21,741	25,830	218	0	0	0	0	0	$972	$2,854	$494	$1,966	$0
S	Jun-09	7,771	9,518	18,649	0	0	247	0	0	0	0	0	$718	$3,233	$365	$3,426	$0
S	Jul-09	22,429	23,675	27,378	0	0	194	0	0	0	0	0	$1,468	$2,539	$747	$8,394	$0
S	Aug-09	11,874	10,134	22,418	0	0	231	0	0	0	0	0	$888	$3,024	$451	$4,555	$0
S	Sep-09	13,262	11,383	19,116	0	0	135	0	0	0	0	0	$874	$1,767	$445	$4,840	$0
W	Oct-09	273	396	424	16,804	20,258	157	0	0	0	0	0	$762	$2,055	$388	$1,564	$0
W	Nov-09	0	0	0	19,956	25,664	148	0	0	0	0	0	$911	$1,937	$464	$1,771	$0
Total		55,825	55,512	88,436	165,013	177,851	2,281	-	-	-	-	-	$10,842	$29,858	$5,513	$34,963	$0

Total kWh	542,637
Total Energy Cost	$51,318
Total Demand Cost	$29,858
Total Cost	$81,176
Effective Rate ($/kWh)	$0.150
Energy Rate ($/kWh)	$0.095

Notes

[1] Total costs exclude customer meter charges, all applicable taxes, and voltage related discounts.

[2] For each billing period, SCE determines the portion of total kWhs supplied by the Utility Retained Generation (URG) and the Department of Water Resources (DWR). Based on published historical trends, this simulation assumes a ratio of 73 to 27, respectively.

Rate TOU-8-STANDBY *Applicability:* Registering demands exceeds 500 kW

	Delivery	Generation	
Energy Rate	Total	URG	DWR
Summer - On Peak ($/kWh)	$0.01989	$0.14290	$0.03763
Mid Peak	$0.01989	$0.08570	$0.03763
Off Peak	$0.01989	$0.04958	$0.03763
Winter - On Peak	-	-	-
Mid Peak	$0.01989	$0.07394	$0.03763
Off Peak	$0.01989	$0.04560	$0.03763
RATES EFFECTIVE:	March 31, 2010		

	Delivery			Generation	
Demand Rate	Trans	Distr	Total	URG	GWR
Summer - On Peak ($/kW)	$0.00	$0.00	$0.00	$18.22	-
Mid Peak	$0.00	$0.00	$0.00	$5.13	-
Off Peak	$0.00	$0.00	$0.00	$0.00	-
Winter - On Peak	-	-	-	-	-
Mid Peak	$0.00	$0.00	$0.00	$0.00	-
Off Peak	$0.00	$0.00	$0.00	$0.00	-
Facilities Demand ($/kW)	$2.77	$9.69	$12.46	$0.00	-

Facility: **East Municipal Water District (Building Loads)**

No. of Rate TOU-8-STANDBY Meters: 1

		Energy Use (kWh)					Demand (kW)						Delivery Charges		Generation Charges		
	Period	Summer On Peak	Summer Mid Peak	Summer Off Peak	Winter Mid Peak	Winter Off Peak	Max kW	Summer On Peak	Summer Mid Peak	Summer Off Peak	Winter Mid Peak	Winter Off Peak	Energy Charge ($)	Facilities Demand Charge ($)	DWR: Energy Charge ($)	SCE: Energy Charge ($)	Seasonal Demand Charge ($)
W	Jan-09	0	0	0	72,806	52,712	640	0	0	0	640	584	$2,497	$7,974	$1,275	$5,684	$0
W	Feb-09	0	0	0	49,784	12,248	616	0	0	0	616	560	$1,234	$7,675	$630	$3,095	$0
W	Mar-09	0	0	0	53,608	17,050	776	0	0	0	776	384	$1,405	$9,669	$718	$3,461	$0
W	Apr-09	0	0	0	78,410	37,533	888	0	0	0	888	568	$2,306	$11,064	$1,178	$5,482	$0
W	May-09	3,396	2,664	706	115,526	62,832	928	792	776	200	928	560	$3,682	$11,563	$1,881	$8,874	$18,411
S	Jun-09	53,092	43,812	35,411	0	0	848	848	696	360	0	0	$2,632	$10,566	$1,344	$9,561	$19,021
S	Jul-09	57,125	45,405	43,362	0	0	808	808	676	460	0	0	$2,902	$10,068	$1,482	$10,369	$18,190
S	Aug-09	71,790	57,398	61,826	0	0	768	768	656	560	0	0	$3,799	$9,569	$1,941	$13,317	$17,358
S	Sep-09	76,688	69,148	60,416	0	0	1,016	1,016	824	648	0	0	$4,102	$12,659	$2,096	$14,512	$22,739
S	Oct-09	2,576	2,500	958	118,362	84,550	784	496	424	312	784	552	$4,156	$9,769	$2,123	$9,663	$11,212
S	Nov-09	2,288	2,250	1,479	156,710	145,669	796	248	212	156	796	572	$6,134	$9,918	$3,133	$13,741	$5,606
W	Dec-08	0	0	0	132,868	144,598	808	0	0	0	808	592	$5,519	$10,068	$2,819	$11,985	$0
	Total	266,955	223,177	204,158	778,074	557,192	9,676	4,976	4,264	2,696	6,236	4,372	$40,368	$120,563	$20,620	$109,745	$112,537

Total kWh	2,029,556
Total Energy Cost	$170,733
Total Demand Cost	$112,537
Total Cost	$283,270
Effective Rate ($/kWh)	$0.140
Energy Rate ($/kWh)	$0.084

Notes

[1] Total costs exclude customer meter charges, all applicable taxes, and voltage related discounts.

[2] For each billing period, SCE determines the portion of total kWhs supplied by the Utility Retained Generation (URG) and the Department of Water Resources (DWR). Based on published historical trends, this simulation assumes a ratio of 73 to 27, respectively.

Lighting Systems Audit

CELite Lighting Audit Software

ID	Source ID	Building	Room #	Plan ID	Room Type	Existing Fixture Type	Fixture Style	Existing Fixture Count (Single)	Existing Fixture Count (Tandem)	Existing Lamp Type	Existing Ballast Type	Proposed Retrofit Type	Total Retrofit Qty	New Lamps Required	New Ballasts Required	New Lamp Type	New Ballast Type	Proposed Control Type	Control Qty	Relay Qty	Retrofit Complexity	Foot Candles Before	Existing Watts Per Fixture	Proposed Watts Per Fixture	Hours of Operation Now	Retrofit Savings (kWh)	Hours of Operation After	Control Savings (kWh)
1	1	Admin First Floor	Office/Mail Room	A039	Open Office	3-F40T12-AB	2x4 Troffer Clear	30		Energy Saving	Energy Saving Magnetic	3-F28T8-AB	30	(30)-F28T8	(30)-2-F28T8;(30)-1-F28T8	Standard	Electronic IS Low Watt					45	114	63	5,044	7,717	5,044	0
2	2	Admin First Floor	Office/Private Office	A040	Private Office	3-F40T12-AB	2x4 Troffer Parabolic	2		Energy Saving	Energy Saving Magnetic	3-F28T8-AB	2	(6)-F28T8	(2)-2-F28T8;(2)-1-F28T8	Standard	Electronic IS Low Watt	OS-2	1	2		42	114	63	4,264	435	3,411	107
3	3	Admin First Floor	AC Lobby/Unisex Rest Room	A034	Restroom	2-F40T12	1x4 Troffer Clear	1		Energy Saving	Energy Saving Magnetic	2-F28T8	1	(2)-F28T8	(1)-2-F28T8	Standard	Electronic IS Low Watt	OS-1	1	1		34	72	41	4,264	132	3,411	35
4	4	Admin First Floor	AC Lobby/Unisex Rest Room	A035	Restroom	2-F40T12	1x4 Troffer Clear	1		Energy Saving	Energy Saving Magnetic	2-F28T8	1	(2)-F28T8	(1)-2-F28T8	Standard	Electronic IS Low Watt	OS-1	1	1		34	72	41	4,264	132	3,411	35
5	5	Admin First Floor	Office/Private Office	A036	Private Office	3-F40T12-AB	2x4 Troffer Parabolic	3		Energy Saving	Energy Saving Magnetic	3-F28T8-AB	3	(9)-F28T8	(3)-2-F28T8;(3)-1-F28T8	Standard	Electronic IS Low Watt	OS-2	1	2		47	114	63	4,264	652	3,411	161
6	6	Admin First Floor	AC Lobby/Lobby	A029	Reception	2-F40T12-U	2x2 Troffer, Parabolic	4		Energy Saving	Energy Saving Magnetic	2-F32T8-U	4	(8)-FB32T8	(4)-2-F32T8	Standard	Electronic IS Low Watt					20	72	48	5,044	484	5,044	0
7	7	Admin First Floor	Office/Private Office	A026	Private Office	3-F40T12	2x4 Troffer Parabolic	1		Energy Saving	Energy Saving Magnetic	3-F28T8	1	(3)-F28T8	(1)-3-F28T8	Standard	Electronic IS Low Watt	OS-2	1	1		40	114	62	4,264	222	3,411	53
8	8	Admin First Floor	AC Lobby/Reception Area	A027	Reception	3-F40T12-AB	2x4 Troffer Parabolic	3		Energy Saving	Energy Saving Magnetic	3-F28T8-AB	3	(9)-F28T8	(3)-2-F28T8;(3)-1-F28T8	Standard	Electronic IS Low Watt					30	114	63	5,044	772	5,044	0
9	9	Admin First Floor	Office/Conference Room	A025	Conference Room	3-F40T12-AB	2x4 Troffer Parabolic	4		Energy Saving	Energy Saving Magnetic	3-F28T8-AB	4	(12)-F28T8	(4)-2-F28T8;(4)-1-F28T8	Standard	Electronic IS Low Watt	OS-3	1	4		40	114	63	3,484	711	2,613	219
10	10	Admin First Floor	Office/Mother's Room	A023	Private Office	3-F40T12-AB	2x4 Troffer Parabolic		2	Energy Saving	Energy Saving Magnetic	3-F28T8-AB	2	(6)-F28T8	(1)-4-F28T8(T);(1)-2-F28T8(T)	Standard	Electronic IS Low Watt	OS-2	1	2		44	114	62	4,264	443	3,411	106
11	11	Admin First Floor	Office/Copy Room	A024	Copy Room	3-F40T12-AB	1x4 Troffer Clear	1		Energy Saving	Energy Saving Magnetic	3-F28T8-AB	1	(3)-F28T8	(1)-2-F28T8;(1)-1-F28T8	Standard	Electronic IS Low Watt	OS-2	1	2		30	114	63	3,484	178	2,787	44
12	12	Admin First Floor	Cafeteria	A015	Commons	3-F40T12-AB	2x4 Troffer Parabolic	9		Energy Saving	Energy Saving Magnetic	3-F28T8-AB	9	(27)-F28T8	(9)-2-F28T8;(9)-1-F28T8	Standard	Electronic IS Low Watt					33	114	63	5,044	2,315	5,044	0
13	13	Admin First Floor	Office/Conference Room	A009	Conference Room	3-F40T12-AB	2x4 Troffer Parabolic	4		Energy Saving	Energy Saving Magnetic	3-F28T8-AB	4	(12)-F28T8	(4)-2-F28T8;(4)-1-F28T8	Standard	Electronic IS Low Watt	OS-3	1	2		37	114	63	3,484	711	2,613	219
14	14	Admin First Floor	Office/Finance Manager Office	A010	Private Office	3-F40T12-AB	2x4 Troffer Parabolic		4	Energy Saving	Energy Saving Magnetic	3-F28T8-AB	4	(12)-F28T8	(2)-4-F28T8(T);(2)-2-F28T8(T)	Standard	Electronic IS Low Watt	OS-2	1	2		40	114	62	4,264	887	3,411	212
15	15	Admin First Floor	Office/Private Office	A005	Private Office	3-F40T12-AB	2x4 Troffer Parabolic	4		Energy Saving	Energy Saving Magnetic	3-F28T8-AB	4	(12)-F28T8	(4)-2-F28T8;(4)-1-F28T8	Standard	Electronic IS Low Watt	OS-2	1	2		43	114	63	4,264	870	3,411	215
16	16	Admin First Floor	Small Reception	A006	Reception	3-F40T12-AB	2x4 Troffer Parabolic		4	Energy Saving	Energy Saving Magnetic	3-F28T8-AB	4	(12)-F28T8	(2)-4-F28T8(T);(2)-2-F28T8(T)	Standard	Electronic IS Low Watt					49	114	62	5,044	1,049	5,044	0
17	17	Admin First Floor	New Business/Men's Rest Room	A012	Restroom	PL-26W	Wall Pack	7				NO CHANGE	7		(2)-4-F28T8(T);(2)-2-F28T8(T)			OS-1	1	1		9	32	32	4,264	0	3,411	191
18	18	Admin First Floor	New Business/Women's Rest Room	A013	Restroom	PL-26W	Wall Pack	7				NO CHANGE	7		(2)-4-F28T8(T);(2)-2-F28T8(T)			OS-1	1	1		9	32	32	4,264	0	3,411	191
19	19	Admin First Floor	AC Lobby/Lobby	A029	Reception	PL-26W	Wall Pack	12				NO CHANGE	12		(2)-4-F28T8(T);(2)-2-F28T8(T)							12	32	32	5,044	0	5,044	0
20	20	Admin First Floor	New Business/Private Office	A007	Private Office	3-F40T12-AB	2x4 Troffer Parabolic	2		Energy Saving	Energy Saving Magnetic	3-F28T8-AB	2	(6)-F28T8	(2)-2-F28T8;(2)-1-F28T8	Standard	Electronic IS Low Watt	OS-2	1	2		50	114	63	4,264	435	3,411	107
21	21	Admin First Floor	New Business/Private Office	A003	Private Office	3-F40T12-AB	2x4 Troffer Parabolic	2		Energy Saving	Energy Saving Magnetic	3-F28T8-AB	2	(6)-F28T8	(2)-2-F28T8;(2)-1-F28T8	Standard	Electronic IS Low Watt	OS-2	1	2		50	114	63	4,264	435	3,411	107
22	22	Admin First Floor	New Business/Private Office	A004	Private Office	3-F40T12-AB	2x4 Troffer Parabolic	4		Energy Saving	Energy Saving Magnetic	3-F28T8-AB	4	(12)-F28T8	(4)-2-F28T8;(4)-1-F28T8	Standard	Electronic IS Low Watt	OS-2	1	2		45	114	63	4,264	870	3,411	215
23	23	Admin First Floor	New Business/Open Office		Open Office	2-F40T12	2x4 Troffer Parabolic	36		Energy Saving	Energy Saving Magnetic	2-F28T8	36	(72)-F28T8	(36)-2-F28T8	Standard	Electronic IS Low Watt					20-30	72	41	5,044	5,629	5,044	0
24	24	Admin First Floor	Customer Service/Open Office		Open Office	3-F40T12	2x4 Troffer Parabolic	29		Energy Saving	Energy Saving Magnetic	3-F28T8	29	(87)-F28T8	(29)-3-F28T8	Standard	Electronic IS Low Watt					20-30	114	62	5,044	7,606	5,044	0
25	25	Admin First Floor	Customer Service/Open Office		Open Office	2-F40T12-U	2x2 Troffer, Parabolic	3		Energy Saving	Energy Saving Magnetic	2-F32T8-U	3	(6)-FB32T8	(3)-2-F32T8	Standard	Electronic IS Low Watt					19	72	48	5,044	363	5,044	0
26	26	Admin First Floor	Hallway		Hallway	2-F40T12-U	2x2 Troffer, Parabolic	3		Energy Saving	Energy Saving Magnetic	2-F32T8-U	3	(6)-FB32T8	(3)-2-F32T8	Standard	Electronic IS Low Watt	OS-4	1	1		5-10	72	48	5,044	363	4,035	145
27	27	Admin First Floor	Hallway		Hallway	2-F40T12	2x4 Troffer Parabolic	2		Energy Saving	Energy Saving Magnetic	2-F28T8	2	(4)-F28T8	(2)-2-F28T8	Standard	Electronic IS Low Watt	OS-4	1	1		35	72	41	5,044	313	4,035	83
28	28	Admin First Floor	Elevator Hallway		Hallway	PL-26W	Wall Pack	8				NO CHANGE	8		(2)-2-F28T8			OS-4	1	1		5-10	32	32	5,044	0	4,035	258
29	29	Admin First Floor	Mail Room Hallway		Hallway	1-F40T12	2x4 Troffer Parabolic	1		Energy Saving	Energy Saving Magnetic	1-F28T8	1	(1)-F28T8	(1)-1-F28T8	Standard	Electronic IS Low Watt	OS-4	1	1		5-10	42	22	5,044	101	4,035	22
30	30	Admin First Floor	New Business/Hallway		Hallway	2-F40T12-U	2x2 Troffer, Parabolic	3		Energy Saving	Energy Saving Magnetic	2-F32T8-U	3	(6)-FB32T8	(3)-2-F32T8	Standard	Electronic IS Low Watt	OS-4	1	1		24	72	48	5,044	363	4,035	145
31	31	Admin First Floor	AC Lobby/Hallway		Hallway	2-F40T12-U	2x2 Troffer, Parabolic	3		Energy Saving	Energy Saving Magnetic	2-F32T8-U	3	(6)-FB32T8	(3)-2-F32T8	Standard	Electronic IS Low Watt	OS-4	1	1		29	72	48	5,044	363	4,035	145
32	32	Operations and Maintenance	Office	113	Private Office	4-F40T12-AB	2x4 Troffer Parabolic		4	Energy Saving	Energy Saving Magnetic	4-F28T8	4	(16)-F28T8	(4)-4-F28T8	Standard	Electronic IS Low Watt	OS-2	1	2			144	83	3,224	787	2,579	214
33	33	Operations and Maintenance	Office	112	Private Office	4-F40T12-AB	2x4 Troffer Parabolic	4		Energy Saving	Energy Saving Magnetic	4-F28T8	4	(16)-F28T8	(4)-4-F28T8	Standard	Electronic IS Low Watt	OS-2	1	2			144	83	3,224	787	2,579	214
34	34	Operations and Maintenance	Purchasing/Conference Room	111	Conference Room	3-F40T12-AB	2x4 Troffer Parabolic		6	Energy Saving	Energy Saving Magnetic	3-F28T8-AB	6	(18)-F28T8	(3)-4-F28T8(T);(3)-2-F28T8(T)	Standard	Electronic IS Low Watt	OS-3	1	2			114	62	2,990	933	2,242	278
35	35	Operations and Maintenance	Purchasing/Private Office	110	Private Office	4-F40T12-AB	2x4 Troffer Parabolic		4	Energy Saving	Energy Saving Magnetic	4-F28T8	4	(16)-F28T8	(4)-4-F28T8	Standard	Electronic IS Low Watt	OS-2	1	2			144	83	3,224	787	2,579	214
36	36	Operations and Maintenance	Purchasing/Storage	108	Storage	2-F40T12	2x4 Troffer Parabolic	1		Energy Saving	Energy Saving Magnetic	2-F28T8	1	(2)-F28T8	(1)-2-F28T8	Standard	Electronic IS Low Watt	OS-2	1	1			72	41	1,664	52	1,331	14
37	37	Operations and Maintenance	Purchasing/Storage	109	Storage	2-F40T12	2x4 Troffer Parabolic	1		Energy Saving	Energy Saving Magnetic	2-F28T8	1	(2)-F28T8	(1)-2-F28T8	Standard	Electronic IS Low Watt	OS-2	1	1			72	41	1,664	52	1,331	14
38	38	Operations and Maintenance	Purchasing/Storage	107	Storage	2-F40T12	2x4 Troffer Parabolic	1		Energy Saving	Energy Saving Magnetic	2-F28T8	1	(2)-F28T8	(1)-2-F28T8	Standard	Electronic IS Low Watt	OS-2	1	1			72	41	1,664	52	1,331	14
39	39	Operations and Maintenance	Purchasing/Storage	106	Storage	3-F40T12-AB	2x4 Troffer Parabolic		2	Energy Saving	Energy Saving Magnetic	3-F28T8-AB	2	(6)-F28T8	(1)-4-F28T8(T);(1)-2-F28T8(T)	Standard	Electronic IS Low Watt	OS-2	1	2			114	62	1,664	173	1,331	41
40	40	Operations and Maintenance	OMC Lobby/Lobby	104	Reception	2-F17T8	2x2 Troffer Parabolic	3		Standard	Electronic IS	NO CHANGE	3		(1)-4-F28T8(T);(1)-2-F28T8(T)								30	30	3,874	0	3,874	0
41	41	Operations and Maintenance	OMC Lobby/Lobby	104	Reception	2-F17T8	2x2 Troffer Parabolic	8		Standard	Electronic IS	NO CHANGE	8		(1)-4-F28T8(T);(1)-2-F28T8(T)								30	30	3,874	0	3,874	0
42	42	Operations and Maintenance	OMC Lobby/Lobby	104	Reception	INC-75W	Recessed Can	6				SI-13W	6										75	18	3,874	1,325	3,874	0
43	43	Operations and Maintenance	OMC Lobby/Lobby	104	Reception	2-F17T8	2x2 Troffer Parabolic	2		Standard	Electronic IS	NO CHANGE	2										30	30	3,874	0	3,874	0
44	44	Operations and Maintenance	OMC Lobby/Men's Rest Room	102	Restroom	2-F40T12	1x4 Strip	1		Energy Saving	Energy Saving Magnetic	2-F28T8	1	(2)-F28T8	(1)-2-F28T8	Standard	Electronic IS Low Watt	OS-1	1	1			72	41	3,380	105	2,704	28
45	45	Operations and Maintenance	OMC Lobby/Men's Rest Room	102	Restroom	PL-13W	Wall Pack	1				NO CHANGE	1		(1)-2-F28T8			OS-1		1			18	18	3,380	0	2,704	12
46	46	Operations and Maintenance	OMC Lobby/Women's Rest Room	103	Restroom	2-F40T12	1x4 Strip	1		Energy Saving	Energy Saving Magnetic	2-F28T8	1	(2)-F28T8	(1)-2-F28T8	Standard	Electronic IS Low Watt	OS-1	1	1			72	41	3,380	105	2,704	28
47	47	Operations and Maintenance	OMC Lobby/Women's Rest Room	103	Restroom	PI-13W	Wall Pack	1				NO CHANGE	1		(1)-2-F28T8			OS-1		1			18	18	3,380	0	2,704	12
48	48	Operations and Maintenance	Conference Room	101	Conference Room	3-F40T12-AB	2x4 Troffer Parabolic	8		Energy Saving	Energy Saving Magnetic	3-F28T8-AB	8	(24)-F28T8	(8)-2-F28T8;(8)-1-F28T8	Standard	Electronic IS Low Watt	OS-3	1	3			114	63	2,990	1,220	2,242	377
49	49	Operations and Maintenance	Conference Room	101	Conference Room	INC-75W	Recessed Can	8				SI-13W	8					OS-3		1			75	18	2,990	1,363	2,242	108
50	50	Operations and Maintenance	Conference Room	101	Conference Room	INC-75W	Recessed Can	4				SI-13W	4					OS-3		1			75	18	2,990	682	2,242	54
51	51	Operations and Maintenance	Office	124	Private Office	4-F40T12-AB	2x4 Troffer Parabolic	1	2	Energy Saving	Energy Saving Magnetic	4-F28T8	3	(12)-F28T8	(1)-4-F28T8;(2)-4-F28T8	Standard	Electronic IS Low Watt	OS-2	1	2			144	83	3,224	590	2,579	161
52	52	Operations and Maintenance	Purchasing/Open Office	105	Open Office	3-F40T12-AB	2x4 Troffer Parabolic	2		Energy Saving	Energy Saving Magnetic	3-F28T8-AB	2	(6)-F28T8	(2)-2-F28T8;(2)-1-F28T8	Standard	Electronic IS Low Watt						114	63	3,614	369	3,614	0
53	53	Operations and Maintenance	Purchasing/Open Office	105	Open Office	3-F40T12-AB	2x4 Troffer Parabolic	2		Energy Saving	Energy Saving Magnetic	3-F28T8-AB	2	(6)-F28T8	(2)-2-F28T8;(2)-1-F28T8	Standard	Electronic IS Low Watt						114	63	3,614	369	3,614	0
54	54	Operations and Maintenance	Purchasing/Hallway	105	Hallway	2-F40T12	2x4 Troffer Parabolic	5		Energy Saving	Energy Saving Magnetic	2-F28T8	5	(10)-F28T8	(5)-2-F28T8	Standard	Electronic IS Low Watt	OS-4	1	1			72	41	3,874	600	3,099	159
55	55	Operations and Maintenance	Purchasing/Hallway	105	Hallway	2-F40T12	2x4 Troffer Parabolic	3		Energy Saving	Energy Saving Magnetic	2-F28T8	3	(6)-F28T8	(3)-2-F28T8	Standard	Electronic IS Low Watt	OS-4	1	1			72	41	3,874	360	3,099	95
56	56	Operations and Maintenance	Storage	158	Storage	2-F40T12	2x4 Troffer Parabolic	1		Energy Saving	Energy Saving Magnetic	2-F28T8	1	(2)-F28T8	(1)-2-F28T8	Standard	Electronic IS Low Watt	OS-2	1	1			72	41	1,664	52	1,331	14
57	57	Operations and Maintenance	Fire Room	157	Storage	2-F40T12	2x4 Troffer Parabolic	1		Energy Saving	Energy Saving Magnetic	2-F28T8	1	(2)-F28T8	(1)-2-F28T8	Standard	Electronic IS Low Watt	OS-2	1	1			72	41	1,664	52	1,331	14
58	58	Operations and Maintenance	CCS Computer Laboratory	159	Open Office	3-F40T12-AB	2x4 Troffer Parabolic	8		Energy Saving	Energy Saving Magnetic	3-F28T8-AB	8	(24)-F28T8	(8)-2-F28T8;(8)-1-F28T8	Standard	Electronic IS Low Watt						114	63	3,614	1,475	3,614	0
59	59	Operations and Maintenance	Control Room	155	Private Office	3-F40T12-AB	2x4 Troffer Parabolic	20		Energy Saving	Energy Saving Magnetic	3-F28T8-AB	20	(60)-F28T8	(20)-2-F28T8;(20)-1-F28T8	Standard	Electronic IS Low Watt	OS-2	1	2			114	63	3,224	3,288	2,579	813
60	60	Operations and Maintenance	Control Room	155	Private Office	INC-75W	Recessed Can	32				SI-13W	32					OS-2	1	1			75	18	3,224	5,881	2,579	372
61	61	Operations and Maintenance	Conference Room	153	Conference Room	3-F40T12-AB	2x4 Troffer Parabolic		6	Energy Saving	Energy Saving Magnetic	3-F28T8-AB	6	(18)-F28T8	(3)-4-F28T8(T);(3)-2-F28T8(T)	Standard	Electronic IS Low Watt	OS-3	1	2			114	62	2,990	933	2,242	278
62	62	Operations and Maintenance	Conference Room	154	Conference Room	3-F40T12-AB	2x4 Troffer Parabolic		6	Energy Saving	Energy Saving Magnetic	3-F28T8-AB	6	(18)-F28T8	(3)-4-F28T8(T);(3)-2-F28T8(T)	Standard	Electronic IS Low Watt	OS-3	1	2			114	62	2,990	933	2,242	278
63	63	Operations and Maintenance	Hallway	152	Hallway	2-F40T12	2x4 Troffer Parabolic	3		Energy Saving	Energy Saving Magnetic	2-F28T8	3	(6)-F28T8	(3)-2-F28T8	Standard	Electronic IS Low Watt	OS-4	1	1			72	41	3,874	360	3,099	95
64	64	Operations and Maintenance	Hallway	152	Hallway	2-F40T12	2x4 Troffer Parabolic	3		Energy Saving	Energy Saving Magnetic	2-F28T8	3	(6)-F28T8	(3)-2-F28T8	Standard	Electronic IS Low Watt	OS-4	1	1			72	41	3,874	360	3,099	95
65	65	Operations and Maintenance	Micro Lab	151	Open Office	3-F40T12-AB	2x4 Troffer Parabolic	14	8	Energy Saving	Energy Saving Magnetic	3-F28T8-AB	22	(66)-F28T8	(14)-2-F28T8;(14)-1-F28T8;(4)-4-F28T8(T);(4)-2-F28T8(T)	Standard	Electronic IS Low Watt						114	63	3,614	4,084	3,614	0
66	66	Operations and Maintenance	Private Office	117	Private Office	4-F40T12-AB	2x4 Troffer Parabolic	4		Energy Saving	Energy Saving Magnetic	4-F28T8	4	(16)-F28T8	(4)-4-F28T8	Standard	Electronic IS Low Watt	OS-2	1	2			144	83	3,224	787	2,579	214
67	67	Operations and Maintenance	Private Office	118	Private Office	4-F40T12-AB	2x4 Troffer Parabolic	4		Energy Saving	Energy Saving Magnetic	4-F28T8	4	(16)-F28T8	(4)-4-F28T8	Standard	Electronic IS Low Watt	OS-2	1	2			144	83	3,224	787	2,579	214
68	68	Operations and Maintenance	Operations Management/Open Office	137	Open Office	3-F40T12-AB	2x4 Troffer Parabolic	6		Energy Saving	Energy Saving Magnetic	3-F28T8-AB	6	(18)-F28T8	(6)-2-F28T8;(6)-1-F28T8	Standard	Electronic IS Low Watt						114	63	3,614	1,106	3,614	0
69	69	Operations and Maintenance	Private Office	116	Private Office	4-F40T12-AB	2x4 Troffer Parabolic	2		Energy Saving	Energy Saving Magnetic	4-F28T8	2	(8)-F28T8	(2)-4-F28T8	Standard	Electronic IS Low Watt	OS-2	1	2			144	83	3,224	393	2,579	107
70	70	Operations and Maintenance	Conference Room	115	Conference Room	3-F40T12-AB	2x4 Troffer Parabolic		6	Energy Saving	Energy Saving Magnetic	3-F28T8-AB	6	(18)-F28T8	(3)-4-F28T8(T);(3)-2-F28T8(T)	Standard	Electronic IS Low Watt	OS-3	1	2			114	62	2,990	933	2,242	278
71	71	Operations and Maintenance	Private Office	114	Private Office	4-F40T12-AB	2x4 Troffer Parabolic	2		Energy Saving	Energy Saving Magnetic	4-F28T8	2	(8)-F28T8	(2)-4-F28T8	Standard	Electronic IS Low Watt	OS-2	1	2			144	83	3,224	393	2,579	107
72	72	Operations and Maintenance	Telephone Room	120	Private Office	2-F40T12	2x4 Troffer Parabolic	1		Energy Saving	Energy Saving Magnetic	2-F28T8	1	(2)-F28T8	(1)-2-F28T8	Standard	Electronic IS Low Watt	OS-2	1	1			72	41	3,224	100	2,579	26
73	73	Operations and Maintenance	Electrical Room	121	Private Office	2-F40T12	2x4 Troffer Parabolic	1		Energy Saving	Energy Saving Magnetic	2-F28T8	1	(2)-F28T8	(1)-2-F28T8	Standard	Electronic IS Low Watt	OS-2	1	1			72	41	3,224	100	2,579	26
74	74	Operations and Maintenance	Men's Restroom	122	Restroom	2-F40T12	2x4 Troffer Parabolic	1		Energy Saving	Energy Saving Magnetic	2-F28T8	1	(2)-F28T8	(1)-2-F28T8	Standard	Electronic IS Low Watt	OS-1	1	1			72	41	3,380	105	2,704	28
75	75	Operations and Maintenance	Men's Restroom	122	Restroom	PI-13W	Wall Pack	1				NO CHANGE	1		(1)-2-F28T8			OS-1		1			18	18	3,380	0	2,704	12
76	76	Operations and Maintenance	Women's Restroom	122	Restroom	2-F40T12	2x4 Troffer Parabolic	1		Energy Saving	Energy Saving Magnetic	2-F28T8	1	(2)-F28T8	(1)-2-F28T8	Standard	Electronic IS Low Watt	OS-1		1			72	41	3,380	105	2,704	28
77	77	Operations and Maintenance	Women's Restroom	122	Restroom	PI-13W	Wall Pack	1				NO CHANGE	1		(1)-2-F28T8			OS-1		1			18	18	3,380	0	2,704	12
78	78	Operations and Maintenance	Safety Operations/Open Office	137	Open Office	2-F40T12	2x4 Troffer Parabolic	5		Energy Saving	Energy Saving Magnetic	2-F28T8	5	(10)-F28T8	(5)-2-F28T8	Standard	Electronic IS Low Watt						72	41	3,614	560	3,614	0
79	79	Operations and Maintenance	Safety Operations/Open Office	137	Open Office	3-F40T12-AB	2x4 Troffer Parabolic	24		Energy Saving	Energy Saving Magnetic	3-F28T8-AB	24	(72)-F28T8	(24)-2-F28T8;(24)-1-F28T8	Standard	Electronic IS Low Watt						114	63	3,614	4,424	3,614	0
80	80	Operations and Maintenance	Safety Operations/Open Office	137	Open Office	3-F40T12-AB	2x4 Troffer Parabolic	15		Energy Saving	Energy Saving Magnetic	3-F28T8-AB	15	(45)-F28T8	(15)-2-F28T8;(15)-1-F28T8	Standard	Electronic IS Low Watt						114	63	3,614	2,765	3,614	0
81	81	Operations and Maintenance	Safety Operations/Open Office	137	Open Office	3-F40T12-AB	2x4 Troffer Parabolic	21		Energy Saving	Energy Saving Magnetic	3-F28T8-AB	21	(63)-F28T8	(21)-2-F28T8;(21)-1-F28T8	Standard	Electronic IS Low Watt						114	63	3,614	3,871	3,614	0
82	82	Operations and Maintenance	Safety Operations/Private Office	125	Private Office	4-F40T12-AB	2x4 Troffer Parabolic		4	Energy Saving	Energy Saving Magnetic	4-F28T8	4	(16)-F28T8	(4)-4-F28T8	Standard	Electronic IS Low Watt	OS-2	1	2			144	83	3,224	787	2,579	214
83	83	Operations and Maintenance	Safety Operations/Private Office	126	Private Office	2-F40T12	2x4 Troffer Parabolic		2	Energy Saving	Energy Saving Magnetic	2-F28T8	2	(4)-F28T8	(1)-4-F28T8(T)	Standard	Electronic IS Low Watt	OS-2	1	1			72	42	3,224	197	2,579	54
84	84	Operations and Maintenance	Safety Operations/Private Office	127	Private Office	4-F40T12-AB	2x4 Troffer Parabolic	2		Energy Saving	Energy Saving Magnetic	4-F28T8	2	(8)-F28T8	(2)-4-F28T8	Standard	Electronic IS Low Watt	OS-2	1	2			144	83	3,224	393	2,579	107

ID	Source ID	Building	Room #	Plan ID	Room Type	Existing Fixture Type	Fixture Style	Existing Fixture Count (Single)	Existing Fixture Count (Tandem)	Existing Lamp Type	Existing Ballast Type	Proposed Retrofit Type	Total Retrofit Qty	New Lamps Required	New Ballasts Required	New Lamp Type	New Ballast Type	Proposed Control Type	Control Qty	Relay Qty	Retrofit Complexity	Foot Candles Before	Existing Watts Per Fixture	Proposed Watts Per Fixture	Hours of Operation Now	Retrofit Savings (kWh)	Hours of Operation After	Control Savings (kWh)
85	85	Operations and Maintenance	Safety Operations/Private Office	128	Private Office	4-F40T12-AB	2x4 Troffer Parabolic	2		Energy Saving	Energy Saving Magnetic	4-F28T8	2	(8)-F28T8	(2)-4-F28T8	Standard	Electronic IS Low Watt	OS-2	1	2			144	83	3,224	393	2,579	107
86	86	Operations and Maintenance	Safety Operations/Private Office	129	Private Office	4-F40T12-AB	2x4 Troffer Parabolic	2		Energy Saving	Energy Saving Magnetic	4-F28T8	2	(8)-F28T8	(2)-4-F28T8	Standard	Electronic IS Low Watt	OS-2	1	2			144	83	3,224	393	2,579	107
87	87	Operations and Maintenance	Safety Operations/Private Office	130	Private Office	4-F40T12-AB	2x4 Troffer Parabolic	2		Energy Saving	Energy Saving Magnetic	4-F28T8	2	(8)-F28T8	(2)-4-F28T8	Standard	Electronic IS Low Watt	OS-2	1	2			144	83	3,224	393	2,579	107
88	88	Operations and Maintenance	Safety Operations/Private Office	131	Private Office	4-F40T12-AB	2x4 Troffer Parabolic	2		Energy Saving	Energy Saving Magnetic	4-F28T8	2	(8)-F28T8	(2)-4-F28T8	Standard	Electronic IS Low Watt	OS-2	1	2			144	83	3,224	393	2,579	107
89	89	Operations and Maintenance	Safety Operations/Private Office	132	Private Office	4-F40T12-AB	2x4 Troffer Parabolic	2		Energy Saving	Energy Saving Magnetic	4-F28T8	2	(8)-F28T8	(2)-4-F28T8	Standard	Electronic IS Low Watt	OS-2	1	2			144	83	3,224	393	2,579	107
90	90	Operations and Maintenance	Safety Operations/Private Office	133	Private Office	4-F40T12-AB	2x4 Troffer Parabolic	2		Energy Saving	Energy Saving Magnetic	4-F28T8	2	(8)-F28T8	(2)-4-F28T8	Standard	Electronic IS Low Watt	OS-2	1	2			144	83	3,224	393	2,579	107
91	91	Operations and Maintenance	Safety Operations/Private Office	134	Private Office	4-F40T12-AB	2x4 Troffer Parabolic	2		Energy Saving	Energy Saving Magnetic	4-F28T8	2	(8)-F28T8	(2)-4-F28T8	Standard	Electronic IS Low Watt	OS-2	1	2			144	83	3,224	393	2,579	107
92	92	Operations and Maintenance	Safety Operations/Private Office	135	Private Office	4-F40T12-AB	2x4 Troffer Parabolic	2		Energy Saving	Energy Saving Magnetic	4-F28T8	2	(8)-F28T8	(2)-4-F28T8	Standard	Electronic IS Low Watt	OS-2	1	2			144	83	3,224	393	2,579	107
93	93	Operations and Maintenance	Safety Operations/Conference Room	136	Conference Room	3-F40T12-AB	2x4 Troffer Parabolic		4	Energy Saving	Energy Saving Magnetic	3-F28T8-AB	4	(12)-F28T8	(2)-4-F28T8(T);(2)-2-F28T8(T)	Standard	Electronic IS Low Watt	OS-3	1	2			114	62	2,990	622	2,242	186
94	94	Operations and Maintenance	Safety Operations/Private Office	138	Private Office	4-F40T12-AB	2x4 Troffer Parabolic	2		Energy Saving	Energy Saving Magnetic	4-F28T8	2	(8)-F28T8	(2)-4-F28T8	Standard	Electronic IS Low Watt	OS-2	1	2			144	83	3,224	393	2,579	107
95	95	Operations and Maintenance	Safety Operations/Private Office	139	Private Office	4-F40T12-AB	2x4 Troffer Parabolic	2		Energy Saving	Energy Saving Magnetic	4-F28T8	2	(8)-F28T8	(2)-4-F28T8	Standard	Electronic IS Low Watt	OS-2	1	2			144	83	3,224	393	2,579	107
96	96	Operations and Maintenance	Safety Operations/Private Office	140	Private Office	4-F40T12-AB	2x4 Troffer Parabolic	2		Energy Saving	Energy Saving Magnetic	4-F28T8	2	(8)-F28T8	(2)-4-F28T8	Standard	Electronic IS Low Watt	OS-2	1	2			144	83	3,224	393	2,579	107
97	97	Operations and Maintenance	Human Resources/File Storage	141	Storage	2-F40T12	2x4 Troffer Parabolic	1		Energy Saving	Energy Saving Magnetic	2-F28T8	1	(2)-F28T8	(1)-2-F28T8	Standard	Electronic IS Low Watt	OS-2	1	1			72	41	1,664	52	1,331	14
98	98	Operations and Maintenance	Human Resources/Open Office	142	Open Office	3-F40T12-AB	2x4 Troffer Parabolic		6	Energy Saving	Energy Saving Magnetic	3-F28T8-AB	6	(18)-F28T8	(3)-4-F28T8(T);(3)-2-F28T8(T)	Standard	Electronic IS Low Watt						114	62	3,614	1,128	3,614	0
99	99	Operations and Maintenance	Payroll/Open Office	143	Open Office	3-F40T12-AB	2x4 Troffer Parabolic		8	Energy Saving	Energy Saving Magnetic	3-F28T8-AB	8	(24)-F28T8	(4)-4-F28T8(T);(4)-2-F28T8(T)	Standard	Electronic IS Low Watt						114	62	3,614	1,503	3,614	0
100	100	Operations and Maintenance	Payroll/Telephone Room	144	Private Office	2-F40T12	2x4 Troffer Parabolic	1		Energy Saving	Energy Saving Magnetic	2-F28T8	1	(2)-F28T8	(1)-2-F28T8	Standard	Electronic IS Low Watt	OS-2	1	1			72	41	3,224	100	2,579	26
101	101	Operations and Maintenance	Laboratory/Electrical Room	145	Open Office	2-F40T12	2x4 Troffer Parabolic	3		Energy Saving	Energy Saving Magnetic	2-F28T8	3	(6)-F28T8	(3)-2-F28T8	Standard	Electronic IS Low Watt						72	41	3,614	336	3,614	0
102	102	Operations and Maintenance	Laboratory/Mechanical Room	146	Open Office	2-F40T12	2x4 Troffer Parabolic	3		Energy Saving	Energy Saving Magnetic	2-F28T8	3	(6)-F28T8	(3)-2-F28T8	Standard	Electronic IS Low Watt						72	41	3,614	336	3,614	0
103	103	Operations and Maintenance	Sample Receiving /Open Office	148	Open Office	3-F40T12-AB	2x4 Troffer Parabolic		8	Energy Saving	Energy Saving Magnetic	3-F28T8-AB	8	(24)-F28T8	(4)-4-F28T8(T);(4)-2-F28T8(T)	Standard	Electronic IS Low Watt						114	62	3,614	1,503	3,614	0
104	104	Operations and Maintenance	Sample Receiving /Open Office	150A	Open Office	2-F40T12	2x4 Troffer Parabolic	1		Energy Saving	Energy Saving Magnetic	2-F28T8	1	(2)-F28T8	(1)-2-F28T8	Standard	Electronic IS Low Watt						72	41	3,614	112	3,614	0
105	105	Operations and Maintenance	Organic Laboratory/Open Office	149	Open Office	3-F40T12-AB	2x4 Troffer Parabolic	4		Energy Saving	Energy Saving Magnetic	3-F28T8-AB	4	(12)-F28T8	(4)-2-F28T8;(4)-1-F28T8	Standard	Electronic IS Low Watt						114	63	3,614	737	3,614	0
106	106	Operations and Maintenance	Organic Laboratory/Storage	147	Storage	3-F40T12-AB	2x4 Troffer Parabolic	4		Energy Saving	Energy Saving Magnetic	3-F28T8-AB	4	(12)-F28T8	(4)-2-F28T8;(4)-1-F28T8	Standard	Electronic IS Low Watt	OS-2	1	2			114	63	1,664	339	1,331	84
107	107	Operations and Maintenance	Organic Laboratory/Storage	147	Storage	2-F40T12	2x4 Troffer Parabolic	1		Energy Saving	Energy Saving Magnetic	2-F28T8	1	(2)-F28T8	(1)-2-F28T8	Standard	Electronic IS Low Watt	OS-2		1			72	41	1,664	52	1,331	14
108	108	Operations and Maintenance	Inorganic Laboratory/Open Office	150	Open Office	3-F40T12-AB	2x4 Troffer Parabolic	14	8	Energy Saving	Energy Saving Magnetic	3-F28T8-AB	22	(66)-F28T8	(14)-2-F28T8;(14)-1-F28T8;(4)-4-F28T8(T);(4)-2-F28T8(T)	Standard	Electronic IS Low Watt						114	63	3,614	4,084	3,614	0
109	109	Operations and Maintenance	Hallway	152	Hallway	2-F17T8	2x2 Troffer Parabolic	5		Standard	Electronic IS	NO CHANGE	5		(14)-2-F28T8;(14)-1-F28T8;(4)-4-F28T8(T);(4)-2-F28T8(T)			OS-4	1	1			30	30	3,874	0	3,099	116
110	110	Operations and Maintenance	Lunch Room	165	Open Office	3-F40T12-AB	2x4 Troffer Parabolic	5		Energy Saving	Energy Saving Magnetic	3-F28T8-AB	5	(15)-F28T8	(5)-2-F28T8;(5)-1-F28T8	Standard	Electronic IS Low Watt						114	63	3,614	922	3,614	0
111	111	Operations and Maintenance	Lunch Room	165	Open Office	3-F40T12-AB	2x4 Troffer Parabolic	6		Energy Saving	Energy Saving Magnetic	3-F28T8-AB	6	(18)-F28T8	(6)-2-F28T8;(6)-1-F28T8	Standard	Electronic IS Low Watt						114	63	3,614	1,106	3,614	0
112	112	Operations and Maintenance	Lunch Room	165	Open Office	3-F40T12-AB	2x4 Troffer Parabolic	6		Energy Saving	Energy Saving Magnetic	3-F28T8-AB	6	(18)-F28T8	(6)-2-F28T8;(6)-1-F28T8	Standard	Electronic IS Low Watt						114	63	3,614	1,106	3,614	0
113	113	Operations and Maintenance	Storage	161	Storage	2-F40T12	2x4 Troffer Parabolic	2		Energy Saving	Energy Saving Magnetic	2-F28T8	2	(4)-F28T8	(2)-2-F28T8	Standard	Electronic IS Low Watt	OS-2	1	1			72	41	1,664	103	1,331	27
114	114	Operations and Maintenance	Storage	162	Storage	2-F40T12	2x4 Troffer Parabolic	2		Energy Saving	Energy Saving Magnetic	2-F28T8	2	(4)-F28T8	(2)-2-F28T8	Standard	Electronic IS Low Watt	OS-2	1	1			72	41	1,664	103	1,331	27
115	115	Operations and Maintenance	Classroom	163	Conference Room	3-F40T12-AB	2x4 Troffer Parabolic	15		Energy Saving	Energy Saving Magnetic	3-F28T8-AB	15	(45)-F28T8	(15)-2-F28T8;(15)-1-F28T8	Standard	Electronic IS Low Watt	OS-3	1	3			114	63	2,990	2,287	2,392	565
116	116	Operations and Maintenance	Classroom	163	Conference Room	INC-75W	Recessed Can	6				SI-13W	6					OS-3		1			75	18	2,990	1,023	2,392	65
117	117	Operations and Maintenance	Classroom	163	Conference Room	INC-75W	Recessed Can	6				SI-13W	6					OS-3		1			75	18	2,990	1,023	2,392	65
118	118	Operations and Maintenance	Men's Room/Commons	168	Commons	2-F40T12	2x4 Troffer Parabolic	5		Energy Saving	Energy Saving Magnetic	2-F28T8	5	(10)-F28T8	(5)-2-F28T8	Standard	Electronic IS Low Watt						72	41	3,874	600	3,874	0
119	119	Operations and Maintenance	Shower Rooms/Commons	170	Commons	PI-13W	Recessed Can	9				NO CHANGE	9		(5)-2-F28T8								18	18	3,874	0	3,874	0
120	120	Operations and Maintenance	Men's Room/Commons	179	Commons	2-F40T12	1x4 Strip	1		Energy Saving	Energy Saving Magnetic	2-F28T8	1	(2)-F28T8	(1)-2-F28T8	Standard	Electronic IS Low Watt						72	41	3,874	120	3,874	0
121	121	Operations and Maintenance	Women's Room/Commons	171	Commons	2-F40T12	2x4 Troffer, Parabolic Lens	2	2	Energy Saving	Energy Saving Magnetic	2-F28T8	4	(8)-F28T8	(2)-2-F28T8;(1)-4-F28T8(T)	Standard	Electronic IS Low Watt						72	41	3,874	477	3,874	0
122	122	Operations and Maintenance	Women's Room/Commons	172	Commons	2-F40T12	2x4 Troffer, Parabolic Lens	3		Energy Saving	Energy Saving Magnetic	2-F28T8	3	(6)-F28T8	(3)-2-F28T8	Standard	Electronic IS Low Watt						72	41	3,874	360	3,874	0
123	123	Operations and Maintenance	Shower Rooms/Commons	173	Commons	PI-13W	Wall Pack	6				NO CHANGE	6		(3)-2-F28T8								18	18	3,874	0	3,874	0
124	124	Operations and Maintenance	Hallway	167	Hallway	2-F40T12	2x4 Troffer, Parabolic Lens	10		Energy Saving	Energy Saving Magnetic	2-F28T8	10	(20)-F28T8	(10)-2-F28T8	Standard	Electronic IS Low Watt	OS-4	1	1			72	41	3,874	1,201	3,099	318
125	125	Admin First Floor	Records Management		Open Office	1-F40T12	2x4 Troffer, Parabolic Lens	42		Energy Saving	Energy Saving Magnetic	1-F28T8	42	(42)-F28T8	(42)-1-F28T8	Standard	Electronic IS Low Watt					20	42	22	5,044	4,237	5,044	0
126	126	Admin First Floor	Information Systems		Open Office	1-F40T12	2x4 Troffer, Parabolic Lens	16		Energy Saving	Energy Saving Magnetic	1-F28T8	16	(16)-F28T8	(16)-1-F28T8	Standard	Electronic IS Low Watt					26	42	22	5,044	1,614	5,044	0
127	127	Admin First Floor	Hallway		Hallway	1-F40T12	2x4 Troffer, Parabolic Lens	3		Energy Saving	Energy Saving Magnetic	1-F28T8	3	(3)-F28T8	(3)-1-F28T8	Standard	Electronic IS Low Watt	OS-4	1	1		21	42	22	5,044	303	4,035	67
128	128	Admin First Floor	Hallway		Hallway	2-F40T12-U	2x2 Troffer, Parabolic	3		Energy Saving	Energy Saving Magnetic	2-F32T8-U	3	(6)-FB32T8	(3)-2-F32T8	Standard	Electronic IS Low Watt	OS-4	1	1		21	72	48	5,044	363	4,035	145
129	129	Admin First Floor	Conference Room	A-38	Conference Room	3-F40T12-AB	2x4 Troffer, Parabolic Lens	6		Energy Saving	Energy Saving Magnetic	3-F28T8-AB	6	(18)-F28T8	(6)-2-F28T8;(6)-1-F28T8	Standard	Electronic IS Low Watt	OS-3	1	2		45	114	63	3,484	1,066	2,613	329
130	130	Admin First Floor	Hallway		Hallway	2-F40T12-U	2x2 Troffer, Parabolic	10		Energy Saving	Energy Saving Magnetic	2-F32T8-U	10	(20)-FB32T8	(10)-2-F32T8	Standard	Electronic IS Low Watt	OS-4	1	1		14	72	48	5,044	1,211	4,035	484
131	131	Admin First Floor	Hallway		Hallway	2-F40T12-U	2x2 Troffer, Parabolic	1		Energy Saving	Energy Saving Magnetic	2-F32T8-U	1	(2)-FB32T8	(1)-2-F32T8	Standard	Electronic IS Low Watt	OS-4	1	1		14	72	48	5,044	121	4,035	48
132	132	Admin First Floor	Private Office	A-46	Private Office	2-F40T12	1x4 Wrap, Clear Lens	1		Energy Saving	Energy Saving Magnetic	2-F28T8	1	(2)-F28T8	(1)-2-F28T8	Standard	Electronic IS Low Watt	OS-2	1	0			72	41	4,264	132	3,411	35
133	133	Admin First Floor	Record Room	A-48	Open Office	3-F40T12-AB	2x4 Troffer, Clear Lens	25		Energy Saving	Energy Saving Magnetic	3-F28T8-AB	25	(75)-F28T8	(25)-2-F28T8;(25)-1-F28T8	Standard	Electronic IS Low Watt					36	114	63	5,044	6,431	5,044	0
134	134	Admin First Floor	Lounger	A-47	Lounge	3-F40T12-AB	2x4 Troffer, Clear Lens	2		Energy Saving	Energy Saving Magnetic	3-F28T8-AB	2	(6)-F28T8	(2)-2-F28T8;(2)-1-F28T8	Standard	Electronic IS Low Watt	OS-2	1	2		30	114	63	5,044	514	4,035	127
135	135	Admin First Floor	Hallway		Hallway	2-F40T12-U	2x2 Troffer, Parabolic	4		Energy Saving	Energy Saving Magnetic	2-F32T8-U	4	(8)-FB32T8	(4)-2-F32T8	Standard	Electronic IS Low Watt	OS-4	1	1		14	72	48	5,044	484	4,035	194
136	136	Admin First Floor	Men's Restroom		Restroom	PL-26W	6" Recessed Can	7				NO CHANGE	7		(4)-2-F32T8			OS-1	1	1			32	32	4,264	0	3,411	191
137	137	Admin First Floor	Women's Restroom		Restroom	PL-26W	6" Recessed Can	7				NO CHANGE	7		(4)-2-F32T8			OS-1		1			32	32	4,264	0	3,411	191
138	138	Admin First Floor	Telephone Room	A-57	Private Office	2-F40T12	2x4 Troffer, Parabolic Lens	1		Energy Saving	Energy Saving Magnetic	2-F28T8	1	(2)-F28T8	(1)-2-F28T8	Standard	Electronic IS Low Watt	OS-2	1	2			72	41	4,264	132	3,411	35
139	139	Admin First Floor	Conference Room	A-62	Conference Room	3-F40T12-AB	2x4 Troffer, Parabolic Lens	6		Energy Saving	Energy Saving Magnetic	3-F28T8-AB	6	(18)-F28T8	(6)-2-F28T8;(6)-1-F28T8	Standard	Electronic IS Low Watt	OS-3	1	2		48	114	63	3,484	1,066	2,613	329
140	140	Admin First Floor	Inspection		Open Office	1-F40T12	2x4 Troffer, Parabolic Lens	21		Energy Saving	Energy Saving Magnetic	1-F28T8	21	(21)-F28T8	(21)-1-F28T8	Standard	Electronic IS Low Watt					28	42	22	5,044	2,118	5,044	0
141	141	Admin First Floor	Storage	A-58	Storage	3-F40T12-AB	2x4 Troffer, Clear Lens	4	2	Energy Saving	Energy Saving Magnetic	3-F28T8-AB	6	(18)-F28T8	(4)-2-F28T8;(4)-1-F28T8;(1)-4-F28T8(T);(1)-2-F28T8(T)	Standard	Electronic IS Low Watt	OS-2	1	2		45	114	63	1,976	609	1,581	149
142	142	Admin First Floor	Private Office	A-59	Private Office	3-F40T12-AB	2x4 Troffer, Parabolic Lens	2		Energy Saving	Energy Saving Magnetic	3-F28T8-AB	2	(6)-F28T8	(2)-2-F28T8;(2)-1-F28T8	Standard	Electronic IS Low Watt	OS-2	1	2		30	114	63	4,264	435	3,411	107
143	143	Admin First Floor	Private Office	A-60	Private Office	3-F40T12-AB	2x4 Troffer, Parabolic Lens	2		Energy Saving	Energy Saving Magnetic	3-F28T8-AB	2	(6)-F28T8	(2)-2-F28T8;(2)-1-F28T8	Standard	Electronic IS Low Watt	OS-2	1	2		30	114	63	4,264	435	3,411	107
144	144	Admin First Floor	Hallway		Hallway	3-F40T12	2x4 Troffer, Clear Lens	4		Energy Saving	Energy Saving Magnetic	3-F28T8	4	(12)-F28T8	(4)-3-F28T8	Standard	Electronic IS Low Watt	OS-4	1	1		40	114	62	5,044	1,049	4,035	250
145	145	Admin First Floor	Private Office	A-65	Private Office	2-F40T12	1x4 Strip	1		Energy Saving	Energy Saving Magnetic	2-F28T8	1	(2)-F28T8	(1)-2-F28T8	Standard	Electronic IS Low Watt	OS-2	1	2			72	41	4,264	132	3,411	35
146	146	Admin First Floor	Private Office	A-67	Private Office	2-F40T12	1x4 Strip	2		Energy Saving	Energy Saving Magnetic	2-F28T8	2	(4)-F28T8	(2)-2-F28T8	Standard	Electronic IS Low Watt	OS-2	1	2			72	41	4,264	264	3,411	70
147	147	Admin First Floor	Private Office	A-68	Private Office	3-F40T12-AB	2x4 Troffer, Clear Lens	4		Energy Saving	Energy Saving Magnetic	3-F28T8-AB	4	(12)-F28T8	(4)-2-F28T8;(4)-1-F28T8	Standard	Electronic IS Low Watt	OS-2	1	2		45	114	63	4,264	870	3,411	215
148	148	Admin First Floor	Information Systems		Open Office	1-F40T12	2x4 Troffer, Parabolic Lens	51		Energy Saving	Energy Saving Magnetic	1-F28T8	51	(51)-F28T8	(51)-1-F28T8	Standard	Electronic IS Low Watt					15-17	42	22	5,044	5,145	5,044	0
149	149	Admin First Floor	Finance Vault Closed	A-49	Storage	3-F40T12	2x4 Troffer	10		Energy Saving	Energy Saving Magnetic	3-F28T8	10	(30)-F28T8	(10)-3-F28T8	Standard	Electronic IS Low Watt	OS-2	1	4			114	62	1,976	1,028	1,581	245
150	150	Admin First Floor	Private Office	A-55	Private Office	3-F40T12	2x4 Troffer, Clear Lens	4		Energy Saving	Energy Saving Magnetic	3-F28T8	4	(12)-F28T8	(4)-3-F28T8	Standard	Electronic IS Low Watt	OS-2	1	2		40	114	62	4,264	887	3,411	212
151	151	Admin First Floor	Private Office	A-61	Private Office	3-F40T12	2x4 Troffer, Clear Lens	3		Energy Saving	Energy Saving Magnetic	3-F28T8	3	(9)-F28T8	(3)-3-F28T8	Standard	Electronic IS Low Watt	OS-2	1	2		60	114	62	4,264	665	3,411	159
152	152	Admin First Floor	Hallway		Hallway	2-F40T12-U	2x2 Troffer, Parabolic	2		Energy Saving	Energy Saving Magnetic	2-F32T8-U	2	(4)-FB32T8	(2)-2-F32T8	Standard	Electronic IS Low Watt	OS-4	1	1		14	72	48	5,044	242	4,035	97
153	153	Admin First Floor	Finance		Open Office	1-F40T12	2x4 Troffer, Clear Lens	55		Energy Saving	Energy Saving Magnetic	1-F28T8	55	(55)-F28T8	(55)-1-F28T8	Standard	Electronic IS Low Watt					15-25	42	22	5,044	5,548	5,044	0
154	154	Admin First Floor	Finance		Open Office	2-F40T12-U	2x2 Troffer, Parabolic	1		Energy Saving	Energy Saving Magnetic	2-F32T8-U	1	(2)-FB32T8	(1)-2-F32T8	Standard	Electronic IS Low Watt					15-25	72	48	5,044	121	5,044	0
155	155	Admin First Floor	Private Office	A-80	Private Office	3-F40T12-AB	2x4 Troffer, Clear Lens	3		Energy Saving	Energy Saving Magnetic	3-F28T8-AB	3	(9)-F28T8	(3)-2-F28T8;(3)-1-F28T8	Standard	Electronic IS Low Watt	OS-2	1	2		40	114	63	4,264	652	3,411	161
156	156	Admin First Floor	Storage	A-78	Storage	3-F40T12-AB	2x4 Troffer, Clear Lens	3		Energy Saving	Energy Saving Magnetic	3-F28T8-AB	3	(9)-F28T8	(3)-2-F28T8;(3)-1-F28T8	Standard	Electronic IS Low Watt	OS-2	1	2		40	114	63	1,976	302	1,581	75
157	157	Admin First Floor	Private Office	A-75	Private Office	3-F40T12-AB	2x4 Troffer, Clear Lens	2		Energy Saving	Energy Saving Magnetic	3-F28T8-AB	2	(6)-F28T8	(2)-2-F28T8;(2)-1-F28T8	Standard	Electronic IS Low Watt	OS-2	1	2		40	114	63	4,264	435	3,411	107
158	158	Admin First Floor	Hallway		Hallway	2-F40T12-U	2x2 Troffer, Parabolic	3		Energy Saving	Energy Saving Magnetic	2-F32T8-U	3	(6)-FB32T8	(3)-2-F32T8	Standard	Electronic IS Low Watt	OS-4	1	1		14	72	48	5,044	363	4,035	145
159	159	Admin First Floor	Computer Room	A-94	Conference Room	3-F40T12-AB	2x4 Troffer, Parabolic Lens	3		Energy Saving	Energy Saving Magnetic	3-F28T8-AB	3	(9)-F28T8	(3)-2-F28T8;(3)-1-F28T8	Standard	Electronic IS Low Watt	OS-3	1	2		32	114	63	3,484	533	2,613	165
160	160	Admin First Floor	Private Office	A-96	Private Office	3-F40T12-AB	2x4 Troffer, Parabolic Lens	3		Energy Saving	Energy Saving Magnetic	3-F28T8-AB	3	(9)-F28T8	(3)-2-F28T8;(3)-1-F28T8	Standard	Electronic IS Low Watt	OS-2	1	2		40	114	63	4,264	652	3,411	161
161	161	Admin First Floor	Private Office	A-86	Private Office	3-F40T12-AB	2x4 Troffer, Parabolic Lens	2		Energy Saving	Energy Saving Magnetic	3-F28T8-AB	2	(6)-F28T8	(2)-2-F28T8;(2)-1-F28T8	Standard	Electronic IS Low Watt	OS-2	1	2		40	114	63	4,264	435	3,411	107
162	162	Admin First Floor	Custodian Room	A-87	Private Office	3-F40T12	2x4 Troffer, Clear Lens	1		Energy Saving	Energy Saving Magnetic	3-F28T8	1	(3)-F28T8	(1)-3-F28T8	Standard	Electronic IS Low Watt	OS-2	1	1			114	62	4,264	222	3,411	53
163	163	Admin First Floor	Private Office	A-91	Private Office	3-F40T12-AB	2x4 Troffer, Parabolic Lens	0	4	Energy Saving	Energy Saving Magnetic	3-F28T8-AB	4	(12)-F28T8	(2)-4-F28T8(T);(2)-2-F28T8(T)	Standard	Electronic IS Low Watt	OS-2	1	2		38	114	62	4,264	887	3,411	212
164	164	Admin First Floor	Storage	A-95	Storage	3-F40T12-AB	2x4 Troffer, Clear Lens	3		Energy Saving	Energy Saving Magnetic	3-F28T8-AB	3	(9)-F28T8	(3)-2-F28T8;(3)-1-F28T8	Standard	Electronic IS Low Watt	OS-2	1	2			114	63	1,976	302	1,581	75
165	165	Admin First Floor	Private Office	A-99	Private Office	3-F40T12-AB	2x4 Troffer, Parabolic Lens	4		Energy Saving	Energy Saving Magnetic	3-F28T8-AB	4	(12)-F28T8	(4)-2-F28T8;(4)-1-F28T8	Standard	Electronic IS Low Watt	OS-2	1	2		45	114	63	4,264	870	3,411	215
166	166	Admin First Floor	Hallway		Hallway	2-F40T12-U	2x2 Troffer, Parabolic	3		Energy Saving	Energy Saving Magnetic	2-F32T8-U	3	(6)-FB32T8	(3)-2-F32T8	Standard	Electronic IS Low Watt	OS-4	1	1		14	72	48	5,044	363	4,035	145
167	167	Admin First Floor	Hallway		Hallway	3-F40T12	2x4 Troffer, Parabolic Lens	5		Energy Saving	Energy Saving Magnetic	3-F28T8	5	(15)-F28T8	(5)-3-F28T8	Standard	Electronic IS Low Watt	OS-4	1	1		22	114	62	5,044	1,311	4,035	313
168	168	Admin First Floor	Reception	A-107	Reception	3-F40T12-AB	2x4 Troffer, Parabolic Lens	2		Energy Saving	Energy Saving Magnetic	3-F28T8-AB	2	(6)-F28T8	(2)-2-F28T8;(2)-1-F28T8	Standard	Electronic IS Low Watt					40	114	63	5,044	514	5,044	0

ID	Source ID	Building	Room #	Plan ID	Room Type	Existing Fixture Type	Fixture Style	Existing Fixture Count (Single)	Existing Fixture Count (Tandem)	Existing Lamp Type	Existing Ballast Type	Proposed Retrofit Type	Total Retrofit Qty	New Lamps Required	New Ballasts Required	New Lamp Type	New Ballast Type	Proposed Control Type	Control Qty	Relay Qty	Retrofit Complexity	Foot Candles Before	Existing Watts Per Fixture	Proposed Watts Per Fixture	Hours of Operation Now	Retrofit Savings (kWh)	Hours of Operation After	Control Savings (kWh)
169	169	Admin First Floor	Private	A-107 A	Private Office	3-F40T12-AB	2x4 Troffer, Parabolic Lens	4		Energy Saving	Energy Saving Magnetic	3-F28T8-AB	4	(12)-F28T8	(4)-2-F28T8;(4)-1-F28T8	Standard	Electronic IS Low Watt	OS-2	1	0		40	114	63	4,264	870	3,411	215
170	170	Admin First Floor	Private	A-107 B	Private Office	3-F40T12-AB	2x4 Troffer, Parabolic Lens	4		Energy Saving	Energy Saving Magnetic	3-F28T8-AB	4	(12)-F28T8	(4)-2-F28T8;(4)-1-F28T8	Standard	Electronic IS Low Watt	OS-2	1	0		35	114	63	4,264	870	3,411	215
171	171	Admin First Floor	Custodian Room	A-105	Private Office	2-F40T12-U	2x2 Troffer, Parabolic	1		Energy Saving	Energy Saving Magnetic	2-F32T8-U	1	(2)-FB32T8	(1)-2-F32T8	Standard	Electronic IS Low Watt	OS-2	1	1			72	48	4,264	102	3,411	41
172	172	Admin First Floor	Custodian Room	A-104	Conference Room	2-F40T12-U	2x2 Troffer, Parabolic	18		Energy Saving	Energy Saving Magnetic	2-F32T8-U	18	(36)-FB32T8	(18)-2-F32T8	Standard	Electronic IS Low Watt	OS-3	1	1			72	48	3,484	1,505	2,613	753
173	173	Admin First Floor	Custodian Room	A-104	Conference Room	PL-26W	Recessed Can	40				NO CHANGE	40		(18)-2-F32T8			OS-3		1			32	32	3,484	0	2,613	1,115
174	174	Admin First Floor	Custodian Room	A-104	Conference Room	MR16-42W	Wall Pack	15				NO CHANGE	15		(18)-2-F32T8			OS-3		1			42	42	3,484	0	2,613	549
175	175	Admin First Floor	Conference Room	A-110	Conference Room	3-F40T12-AB	2x4 Troffer, Clear Lens	4		Energy Saving	Energy Saving Magnetic	3-F28T8-AB	4	(12)-F28T8	(4)-2-F28T8;(4)-1-F28T8	Standard	Electronic IS Low Watt	OS-3	1	2		44	114	63	3,484	711	2,613	219
176	176	Admin First Floor	Conference Room	A-110	Conference Room	2-F40T12	1x4 Wrap, Clear Lens	1		Energy Saving	Energy Saving Magnetic	2-F28T8	1	(2)-F28T8	(1)-2-F28T8	Standard	Electronic IS Low Watt	OS-3		1		40	72	41	3,484	108	2,613	36
177	177	Admin First Floor	Custodian Room	A-106	Private Office	2-F40T12-U	2x2 Troffer, Parabolic	1		Energy Saving	Energy Saving Magnetic	2-F32T8-U	1	(2)-FB32T8	(1)-2-F32T8	Standard	Electronic IS Low Watt	OS-2	1	1			72	48	4,264	102	3,411	41
178	178	Admin Second Floor	Hallway		Hallway	3-F40T12-AB	2x4 Troffer, Parabolic Lens	5		Energy Saving	Energy Saving Magnetic	3-F28T8-AB	5	(15)-F28T8	(5)-2-F28T8;(5)-1-F28T8	Standard	Electronic IS Low Watt	OS-4	1	1			114	63	5,044	1,286	4,035	318
179	179	Admin Second Floor	Hallway		Hallway	2-F40T12-U	2x2 Troffer, Parabolic	16		Energy Saving	Energy Saving Magnetic	2-F32T8-U	16	(32)-FB32T8	(16)-2-F32T8	Standard	Electronic IS Low Watt	OS-4	1	1		19-44	72	48	5,044	1,937	4,035	775
180	180	Admin Second Floor	Map and Records Office	A255	Reception	3-F40T12-AB	2x4 Troffer, Clear Lens	6		Energy Saving	Energy Saving Magnetic	3-F28T8-AB	6	(18)-F28T8	(6)-2-F28T8;(6)-1-F28T8	Standard	Electronic IS Low Watt					47	114	63	5,928	1,814	5,928	0
181	181	Admin Second Floor	Map and Records Office	A256	Storage	3-F40T12-AB	2x4 Troffer, Clear Lens	21		Energy Saving	Energy Saving Magnetic	3-F28T8-AB	21	(63)-F28T8	(21)-2-F28T8;(21)-1-F28T8	Standard	Electronic IS Low Watt	OS-2	1	2		55	114	63	1,976	2,116	1,581	523
182	182	Admin Second Floor	Storage	A259	Storage	3-F40T12	2x4 Troffer, Clear Lens	2		Energy Saving	Energy Saving Magnetic	3-F28T8	2	(6)-F28T8	(2)-3-F28T8	Standard	Electronic IS Low Watt	OS-2	1				114	62	1,976	206	1,581	49
183	183	Admin Second Floor	Private Office	A252	Private Office	3-F40T12-AB	2x4 Troffer, Clear Lens	3		Energy Saving	Energy Saving Magnetic	3-F28T8-AB	3	(9)-F28T8	(3)-2-F28T8;(3)-1-F28T8	Standard	Electronic IS Low Watt	OS-2	1	2			114	63	4,030	617	3,224	152
184	184	Admin Second Floor	Open Office	A251	Open Office	3-F40T12-AB	2x4 Troffer, Clear Lens	10		Standard	Standard Magnetic	3-F28T8-AB	10	(30)-F28T8	(10)-2-F28T8;(10)-1-F28T8	Standard	Electronic IS Low Watt					45-48	150	63	5,044	4,388	5,044	0
185	185	Admin Second Floor	Machine Room	A253	Open Office	3-F40T12	2x4 Troffer, Clear Lens	1		Energy Saving	Energy Saving Magnetic	3-F28T8	1	(3)-F28T8	(1)-3-F28T8	Standard	Electronic IS Low Watt						114	62	5,044	262	5,044	0
186	186	Admin Second Floor	Private Office	A248	Private Office	3-F40T12-AB	2x4 Troffer, Parabolic Lens	4		Energy Saving	Energy Saving Magnetic	3-F28T8-AB	4	(12)-F28T8	(4)-2-F28T8;(4)-1-F28T8	Standard	Electronic IS Low Watt	OS-2	1	2		45	114	63	4,030	822	3,224	203
187	187	Admin Second Floor	Engineering Services		Open Office	1-F40T12	2x4 Troffer, Parabolic Lens	66		Energy Saving	Energy Saving Magnetic	1-F28T8	66	(66)-F28T8	(66)-1-F28T8	Standard	Electronic IS Low Watt					18	42	22	5,044	6,658	5,044	0
188	188	Admin Second Floor	Private Office	A236	Private Office	3-F40T12-AB	2x4 Troffer, Parabolic Lens	2		Energy Saving	Energy Saving Magnetic	3-F28T8-AB	2	(6)-F28T8	(2)-2-F28T8;(2)-1-F28T8	Standard	Electronic IS Low Watt	OS-2	1	2		45	114	63	4,030	411	3,224	102
189	189	Admin Second Floor	Private Office	A235	Private Office	3-F40T12-AB	2x4 Troffer, Parabolic Lens	2		Energy Saving	Energy Saving Magnetic	3-F28T8-AB	2	(6)-F28T8	(2)-2-F28T8;(2)-1-F28T8	Standard	Electronic IS Low Watt	OS-2	1	2		45	114	63	4,030	411	3,224	102
190	190	O&M Shops	AutoShop	207	Workshop	MH-1000W	High Bay Dome	20				NO CHANGE	20		(2)-2-F28T8;(2)-1-F28T8								1080	1080	3,250	0	3,250	0
191	191	O&M Shops	AutoShop	207	Workshop	2-F40T12-U	2x2 Troffer, Parabolic		6	Energy Saving	Energy Saving Magnetic	2-F32T8-U	6	(12)-FB32T8	(3)-4-F32T8(T)	Standard	Electronic IS Low Watt						72	48	3,250	468	3,250	0
192	192	O&M Shops	AutoShop	207	Private Office	2-F40T12	2x4 Troffer, Clear Lens	10		Energy Saving	Energy Saving Magnetic	2-F28T8	10	(20)-F28T8	(10)-2-F28T8	Standard	Electronic IS Low Watt	OS-2	1	1		48	72	41	3,250	1,008	2,600	267
193	193	O&M Shops	Autoshop	207	Workshop	2-F96T12	Wall Mount	9		Energy Saving	Energy Saving Magnetic	4-F32T8	9	(36)-F32T8	(9)-4-F32T8	Standard	Electronic IS Low Watt				Retrofit Kit (8-foot to 4-foot)		131	96	3,250	1,024	3,250	0
194	194	O&M Shops	Emergency Generator Room	400	Warehouse	2-F40T12	Wall Mount	8		Standard	Standard Magnetic	2-F28T8	8	(16)-F28T8	(8)-2-F28T8	Standard	Electronic IS Low Watt						96	41	3,250	1,430	3,250	0
195	195	O&M Shops	Construction	401	Warehouse	MH-400W	Cable Mounted Can	6		Standard	Standard Magnetic	New-4-F54T5-HO	6	(24)-F54T5-HO	(12)-2-F54T5-HO	Standard	Electronic IS						458	234	3,250	4,368	3,250	0
196	196	O&M Shops	Storage	402	Warehouse	2-F40T12	2x4 Troffer, Parabolic Lens	4		Energy Saving	Energy Saving Magnetic	2-F28T8	4	(8)-F28T8	(4)-2-F28T8	Standard	Electronic IS Low Watt						72	41	3,250	403	3,250	0
197	197	O&M Shops	Flammable	403	Warehouse	2-F40T12	2x4 Troffer, Parabolic Lens	2		Energy Saving	Energy Saving Magnetic	2-F28T8	2	(4)-F28T8	(2)-2-F28T8	Standard	Electronic IS Low Watt						72	41	3,250	202	3,250	0
198	198	O&M Shops	Collection Services	404	Warehouse	MH-400W	Cable Mounted Can	2		Standard	Standard Magnetic	New-4-F54T5-HO	2	(8)-F54T5-HO	(4)-2-F54T5-HO	Standard	Electronic IS						458	234	3,250	1,456	3,250	0
199	199	O&M Shops	Purchasing	405	Warehouse	MH-400W	Cable Mounted Can	15		Standard	Standard Magnetic	New-4-F54T5-HO	15	(60)-F54T5-HO	(30)-2-F54T5-HO	Standard	Electronic IS						458	234	3,250	10,920	3,250	0
200	200	O&M Shops	Purchasing	405	Warehouse	2-F40T12	2x4 Box, Open Box	29		Energy Saving	Energy Saving Magnetic	2-F28T8	29	(58)-F28T8	(29)-2-F28T8	Standard	Electronic IS Low Watt						72	41	3,250	2,922	3,250	0
201	201	O&M Shops	Open Office	406	Warehouse	2-F40T12	2x4 Box, Open Box	4		Energy Saving	Energy Saving Magnetic	2-F28T8	4	(8)-F28T8	(4)-2-F28T8	Standard	Electronic IS Low Watt						72	41	3,250	403	3,250	0
202	202	O&M Shops	Welding Shop	301	Workshop	MH-1000W	Cable Mounted Can	16				NO CHANGE	16		(4)-2-F28T8								1080	1080	3,250	0	3,250	0
203	203	O&M Shops	Welding Shop	301	Workshop	MH-400W	Cable Mounted Can	9		Standard	Standard Magnetic	New-4-F54T5-HO	9	(36)-F54T5-HO	(18)-2-F54T5-HO	Standard	Electronic IS						458	234	3,250	6,552	3,250	0
204	204	O&M Shops	Welding Shop	301	Workshop	MH-1000W	Cable Mounted Can	4				NO CHANGE	4		(18)-2-F54T5-HO								1080	1080	3,250	0	3,250	0
205	205	O&M Shops	Office	302	Open Office	2-F40T12-U	2x2 Troffer, Parabolic	4		Energy Saving	Energy Saving Magnetic	2-F32T8-U	4	(8)-FB32T8	(4)-2-F32T8	Standard	Electronic IS Low Watt						72	48	3,250	312	3,250	0
206	206	O&M Shops	Tool Room	303	Workshop	MH-1000W	Cable Mounted Can	4				NO CHANGE	4		(4)-2-F32T8								1080	1080	3,250	0	3,250	0
207	207	O&M Shops	CADD Room	309	Open Office	2-F40T12-U	2x2 Troffer, Parabolic	6		Energy Saving	Energy Saving Magnetic	2-F32T8-U	6	(12)-FB32T8	(6)-2-F32T8	Standard	Electronic IS Low Watt						72	48	3,250	468	3,250	0
208	208	O&M Shops	Office	305	Open Office	2-F40T12-U	2x2 Troffer, Parabolic	4		Energy Saving	Energy Saving Magnetic	2-F32T8-U	4	(8)-FB32T8	(4)-2-F32T8	Standard	Electronic IS Low Watt						72	48	3,250	312	3,250	0
209	209	O&M Shops	Electrical shop	307	Workshop	MH-400W	Cable Mounted Can	8		Standard	Standard Magnetic	New-4-F54T5-HO	8	(32)-F54T5-HO	(16)-2-F54T5-HO	Standard	Electronic IS						458	234	3,250	5,824	3,250	0
210	210	O&M Shops	Compressor Room	306	Private Office	2-F40T12	2x4 Box, Open Box	6		Energy Saving	Energy Saving Magnetic	2-F28T8	6	(12)-F28T8	(6)-2-F28T8	Standard	Electronic IS Low Watt	OS-2	1	1			72	41	3,250	605	2,600	160
211	211	O&M Shops	Tool Room	310	Workshop	2-F40T12	2x4 Box, Open Box	1		Energy Saving	Energy Saving Magnetic	2-F28T8	1	(2)-F28T8	(1)-2-F28T8	Standard	Electronic IS Low Watt						72	41	3,250	101	3,250	0
212	212	O&M Shops	Instrument Room	311	Workshop	MH-250W	Cable Mounted Can	6		Standard	Standard Magnetic	New-3-F54T5-HO	6	(18)-F54T5-HO	(6)-2-F54T5-HO;(6)-1-F54T5-HO	Standard	Electronic IS						294	182	3,250	2,184	3,250	0
213	213	O&M Shops	Storage	312	Storage	2-F40T12	2x4 Box, Open Box	3		Energy Saving	Energy Saving Magnetic	2-F28T8	3	(6)-F28T8	(3)-2-F28T8	Standard	Electronic IS Low Watt	OS-2	1	1			72	41	3,250	302	2,600	80
214	214	O&M Shops	Grounds shops	313	Workshop	MH-250W	Cable Mounted Can	8		Standard	Standard Magnetic	New-3-F54T5-HO	8	(24)-F54T5-HO	(8)-2-F54T5-HO;(8)-1-F54T5-HO	Standard	Electronic IS						294	182	3,250	2,912	3,250	0
215	215	O&M Shops	Storage	314	Storage	2-F40T12	2x4 Box, Open Box	1		Energy Saving	Energy Saving Magnetic	2-F28T8	1	(2)-F28T8	(1)-2-F28T8	Standard	Electronic IS Low Watt	OS-2	1	1			72	41	3,250	101	2,600	27
216	216	O&M Shops	Open Office	315	Open Office	2-F40T12	2x4 Box, Open Box	6		Energy Saving	Energy Saving Magnetic	2-F28T8	6	(12)-F28T8	(6)-2-F28T8	Standard	Electronic IS Low Watt						72	41	3,250	605	3,250	0
217	217	O&M Shops	Metal Shop	316	Workshop	MH-400W	Cable Mounted Can	2		Standard	Standard Magnetic	New-4-F54T5-HO	2	(8)-F54T5-HO	(4)-2-F54T5-HO	Standard	Electronic IS						458	234	3,250	1,456	3,250	0
218	218	O&M Shops	Storage	317	Storage	MH-250W	Cable Mounted Can	2		Standard	Standard Magnetic	New-3-F54T5-HO	2	(6)-F54T5-HO	(2)-2-F54T5-HO;(2)-1-F54T5-HO	Standard	Electronic IS	OS-2	1	2			294	182	3,250	728	2,600	237
219	219	O&M Shops	Storage	319	Storage	MH-250W	Cable Mounted Can	8		Standard	Standard Magnetic	New-3-F54T5-HO	8	(24)-F54T5-HO	(8)-2-F54T5-HO;(8)-1-F54T5-HO	Standard	Electronic IS	OS-2	1	2			294	182	3,250	2,912	2,600	946
220	220	O&M Shops	Mechanical Room	172	Private Office	2-F40T12	2x4 Box, Open Box	3		Energy Saving	Energy Saving Magnetic	2-F28T8	3	(6)-F28T8	(3)-2-F28T8	Standard	Electronic IS Low Watt	OS-2	1	1			72	41	3,250	302	2,600	80
221	221	O&M Shops	Open Office	179	Open Office	2-F40T12	2x4 Box, Open Box	6		Energy Saving	Energy Saving Magnetic	2-F28T8	6	(12)-F28T8	(6)-2-F28T8	Standard	Electronic IS Low Watt						72	41	3,250	605	3,250	0
222	222	O&M Shops	Storage	179A	Storage	2-F40T12	2x4 Box, Open Box	4		Energy Saving	Energy Saving Magnetic	2-F28T8	4	(8)-F28T8	(4)-2-F28T8	Standard	Electronic IS Low Watt	OS-2	1	1			72	41	3,250	403	2,600	107
223	223	O&M Shops	Mechanical Room	178	Private Office	2-F40T12	2x4 Box, Open Box	2		Energy Saving	Energy Saving Magnetic	2-F28T8	2	(4)-F28T8	(2)-2-F28T8	Standard	Electronic IS Low Watt	OS-2	1	1			72	41	3,250	202	2,600	53
224	224	O&M Shops	Steam Cleaning Bay	514	Workshop	2-F40T12	2x4 Box, Open Box	20		Energy Saving	Energy Saving Magnetic	2-F28T8	20	(40)-F28T8	(20)-2-F28T8	Standard	Electronic IS Low Watt						72	41	3,250	2,015	3,250	0
225	225	O&M Shops	Storage	513	Storage	2-F96T12	1x8 Strip Fixture	6		Energy Saving	Energy Saving Magnetic	4-F32T8	6	(24)-F32T8	(6)-4-F32T8	Standard	Electronic IS Low Watt	OS-2	1	1	Retrofit Kit (8-foot to 4-foot)		131	96	3,250	683	2,600	374
226	226	O&M Shops	Men's Restroom	511	Restroom	2-F40T12	2x4 Box, Open Box		2	Energy Saving	Energy Saving Magnetic	2-F28T8	2	(4)-F28T8	(1)-4-F28T8(T)	Standard	Electronic IS Low Watt	OS-1	1	1			72	42	3,250	198	2,600	54
227	227	O&M Shops	Women's Restroom	512	Restroom	2-F40T12	2x4 Box, Open Box		2	Energy Saving	Energy Saving Magnetic	2-F28T8	2	(4)-F28T8	(1)-4-F28T8(T)	Standard	Electronic IS Low Watt	OS-1	1	1			72	42	3,250	198	2,600	54
228	228	O&M Shops	Sheet Metal Shop	510	Workshop	2-F96T12	1x8 Strip Fixture	7	2	Energy Saving	Energy Saving Magnetic	4-F32T8	9	(36)-F32T8	(7)-4-F32T8;(2)-4-F32T8	Standard	Electronic IS Low Watt				Retrofit Kit (8-foot to 4-foot)		131	96	3,250	1,024	3,250	0
229	229	O&M Shops	Paint Store	507	Workshop	2-F40T12	2x4 Box, Open Box	1		Energy Saving	Energy Saving Magnetic	2-F28T8	1	(2)-F28T8	(1)-2-F28T8	Standard	Electronic IS Low Watt						72	41	3,250	101	3,250	0
230	230	O&M Shops	Solvent Store	508	Workshop	2-F40T12	2x4 Box, Open Box	1		Energy Saving	Energy Saving Magnetic	2-F28T8	1	(2)-F28T8	(1)-2-F28T8	Standard	Electronic IS Low Watt						72	41	3,250	101	3,250	0
231	231	O&M Shops	Paint Wash	509	Workshop	2-F40T12	2x4 Box, Open Box	1		Energy Saving	Energy Saving Magnetic	2-F28T8	1	(2)-F28T8	(1)-2-F28T8	Standard	Electronic IS Low Watt						72	41	3,250	101	3,250	0
232	232	O&M Shops	Paint Booth Room	506	Workshop	2-F96T12	1x8 Strip Fixture	18		Energy Saving	Energy Saving Magnetic	4-F32T8	18	(72)-F32T8	(18)-4-F32T8	Standard	Electronic IS Low Watt				Retrofit Kit (8-foot to 4-foot)		131	96	3,250	2,048	3,250	0
233	233	O&M Shops	Paint Shop	505	Workshop	2-F96T12	1x8 Strip Fixture	18		Energy Saving	Energy Saving Magnetic	4-F32T8	18	(72)-F32T8	(18)-4-F32T8	Standard	Electronic IS Low Watt				Retrofit Kit (8-foot to 4-foot)		131	96	3,250	2,048	3,250	0
234	234	O&M Shops	Employee Room	504	Open Office	2-F40T12	2x4 Box, Open Box	1		Energy Saving	Energy Saving Magnetic	2-F28T8	1	(2)-F28T8	(1)-2-F28T8	Standard	Electronic IS Low Watt						72	41	3,250	101	3,250	0
235	235	O&M Shops	Mechanical Room	503	Workshop	2-F40T12	2x4 Box, Open Box	3		Energy Saving	Energy Saving Magnetic	2-F28T8	3	(6)-F28T8	(3)-2-F28T8	Standard	Electronic IS Low Watt						72	41	3,250	302	3,250	0
236	236	O&M Shops	Compressor Room	502	Workshop	2-F96T12	1x8 Strip Fixture	6		Energy Saving	Energy Saving Magnetic	4-F32T8	6	(24)-F32T8	(6)-4-F32T8	Standard	Electronic IS Low Watt				Retrofit Kit (8-foot to 4-foot)		131	96	3,250	683	3,250	0
237	237	O&M Shops	Sand Blasting	501	Workshop	2-F40T12	2x4 Box, Open Box	15		Energy Saving	Energy Saving Magnetic	2-F28T8	15	(30)-F28T8	(15)-2-F28T8	Standard	Electronic IS Low Watt						72	41	3,250	1,511	3,250	0
238	238	Admin Second Floor	Riser Room/Computer Traning Room	A260	Open Office	3-F40T12-AB	2x4 Troffer	7		Energy Saving	Energy Saving Magnetic	3-F28T8-AB	7	(21)-F28T8	(7)-2-F28T8;(7)-1-F28T8	Standard	Electronic IS Low Watt						114	63	5,044	1,801	5,044	0
239	239	Admin Second Floor	Private Office	A204	Private Office	3-F40T12-AB	2x4 Troffer	6		Energy Saving	Energy Saving Magnetic	3-F28T8-AB	6	(18)-F28T8	(6)-2-F28T8;(6)-1-F28T8	Standard	Electronic IS Low Watt	OS-2	1	2			114	63	4,030	1,233	3,224	305
240	240	Admin Second Floor	Private Office	A203	Private Office	3-F40T12-AB	2x4 Troffer	2		Energy Saving	Energy Saving Magnetic	3-F28T8-AB	2	(6)-F28T8	(2)-2-F28T8;(2)-1-F28T8	Standard	Electronic IS Low Watt	OS-2	1	2			114	63	4,030	411	3,224	102
241	241	Admin Second Floor	Private Office	A202	Private Office	3-F40T12-AB	2x4 Troffer	2		Energy Saving	Energy Saving Magnetic	3-F28T8-AB	2	(6)-F28T8	(2)-2-F28T8;(2)-1-F28T8	Standard	Electronic IS Low Watt	OS-2	1	2			114	63	4,030	411	3,224	102
242	242	Admin Second Floor	Private Office	A205	Private Office	3-F40T12-AB	2x4 Troffer	2		Energy Saving	Energy Saving Magnetic	3-F28T8-AB	2	(6)-F28T8	(2)-2-F28T8;(2)-1-F28T8	Standard	Electronic IS Low Watt	OS-2	1	2			114	63	4,030	411	3,224	102
243	243	Admin Second Floor	Private Office	A206	Private Office	3-F40T12-AB	2x4 Troffer	2		Energy Saving	Energy Saving Magnetic	3-F28T8-AB	2	(6)-F28T8	(2)-2-F28T8;(2)-1-F28T8	Standard	Electronic IS Low Watt	OS-2	1	2			114	63	4,030	411	3,224	102
244	244	Admin Second Floor	Private Office	A207	Private Office	3-F40T12-AB	2x4 Troffer	2		Energy Saving	Energy Saving Magnetic	3-F28T8-AB	2	(6)-F28T8	(2)-2-F28T8;(2)-1-F28T8	Standard	Electronic IS Low Watt	OS-2	1	2			114	63	4,030	411	3,224	102
245	245	Admin Second Floor	Conference Room	A217	Conference Room	3-F40T12	2x4 Troffer	8		Energy Saving	Energy Saving Magnetic	3-F28T8	8	(24)-F28T8	(8)-3-F28T8	Standard	Electronic IS Low Watt	OS-3	1	3			114	62	3,484	1,449	2,613	432
246	246	Admin Second Floor	Conference Room	A218	Conference Room	3-F40T12	2x4 Troffer	8		Energy Saving	Energy Saving Magnetic	3-F28T8	8	(24)-F28T8	(8)-3-F28T8	Standard	Electronic IS Low Watt	OS-3	1	3			114	62	3,484	1,449	2,613	432
247	247	Admin Second Floor	Conference Room	A218	Conference Room	2-F40T12-U	2x2 Troffer, Parabolic		4	Energy Saving	Energy Saving Magnetic	2-F32T8-U	4	(8)-FB32T8	(2)-4-F32T8(T)	Standard	Electronic IS Low Watt	OS-3		1			72	48	3,484	334	2,613	167
248	248	Admin Second Floor	Copy Room	A210	Private Office	2-F40T12	2x4 Box, Open Box	1		Energy Saving	Energy Saving Magnetic	2-F28T8	1	(2)-F28T8	(1)-2-F28T8	Standard	Electronic IS Low Watt	OS-2	1	1			72	41	4,030	125	3,224	33
249	249	Admin Second Floor	Men's Restroom	A211	Restroom	PL-26W	Recessed Can	7				NO CHANGE	7		(1)-2-F28T8			OS-1	1	2			32	32	4,264	0	3,411	191
250	250	Admin Second Floor	Women's Restroom	A212	Restroom	PL-26W	Recessed Can	7				NO CHANGE	7		(1)-2-F28T8			OS-1	1	2			32	32	4,264	0	3,411	191
251	251	Admin Second Floor	Telephone Room	A213	Private Office	2-F40T12-U	2x2 Troffer, Parabolic	1		Energy Saving	Energy Saving Magnetic	2-F32T8-U	1	(2)-FB32T8	(1)-2-F32T8	Standard	Electronic IS Low Watt	OS-2	1	1			72	48	4,030	97	3,224	39
252	252	Admin Second Floor	Electrical Room	A214	Private Office	2-F40T12-U	2x2 Troffer, Parabolic	1		Energy Saving	Energy Saving Magnetic	2-F32T8-U	1	(2)-FB32T8	(1)-2-F32T8	Standard	Electronic IS Low Watt	OS-2	1	1			72	48	4,030	97	3,224	39

ID	Source ID	Building	Room #	Plan ID	Room Type	Existing Fixture Type	Fixture Style	Existing Fixture Count (Single)	Existing Fixture Count (Tandem)	Existing Lamp Type	Existing Ballast Type	Proposed Retrofit Type	Total Retrofit Qty	New Lamps Required	New Ballasts Required	New Lamp Type	New Ballast Type	Proposed Control Type	Control Qty	Relay Qty	Retrofit Complexity	Foot Candles Before	Existing Watts Per Fixture	Proposed Watts Per Fixture	Hours of Operation Now	Retrofit Savings (kWh)	Hours of Operation After	Control Savings (kWh)
253	253	Admin Second Floor	Janitor	A215	Private Office	2-F40T12-U	2x2 Troffer, Parabolic	1		Energy Saving	Energy Saving Magnetic	2-F32T8-U	1	(2)-FB32T8	(1)-2-F32T8	Standard	Electronic IS Low Watt	OS-2	1	1			72	48	4,030	97	3,224	39
254	254	Admin Second Floor	Intergraph Room	A219	Open Office	3-F40T12-AB	2x4 Troffer	9		Energy Saving	Energy Saving Magnetic	3-F28T8-AB	9	(27)-F28T8	(9)-2-F28T8;(9)-1-F28T8	Standard	Electronic IS Low Watt						114	63	5,044	2,315	5,044	0
255	255	Admin Second Floor	Intergraph Room	A219	Open Office	INC-75W	Recessed Can	4				SI-13W	4										75	18	5,044	1,150	5,044	0
256	256	Admin Second Floor	Intergraph Room	A219	Open Office	INC-75W	Recessed Can	4				SI-13W	4										75	18	5,044	1,150	5,044	0
257	257	Admin Second Floor	Intergraph Room	A219	Open Office	INC-75W	Recessed Can	4				SI-13W	4										75	18	5,044	1,150	5,044	0
258	258	Admin Second Floor	Intergraph Room	A219	Open Office	INC-75W	Recessed Can	4				SI-13W	4										75	18	5,044	1,150	5,044	0
259	259	Admin Second Floor	Intergraph Room	A219	Open Office	INC-75W	Recessed Can	4				SI-13W	4										75	18	5,044	1,150	5,044	0
260	260	Admin Second Floor	Executive Office	A208	Open Office	3-F40T12-AB	2x4 Troffer	9		Energy Saving	Energy Saving Magnetic	3-F28T8-AB	9	(27)-F28T8	(9)-2-F28T8;(9)-1-F28T8	Standard	Electronic IS Low Watt						114	63	5,044	2,315	5,044	0
261	261	Admin Second Floor	Hallway	A209	Hallway	2-F40T12-U	2x2 Troffer, Parabolic	7		Energy Saving	Energy Saving Magnetic	2-F32T8-U	7	(14)-FB32T8	(7)-2-F32T8	Standard	Electronic IS Low Watt	OS-4	1	1			72	48	5,044	847	4,035	339
262	262	Admin Second Floor	Private Office	A220	Private Office	3-F40T12-AB	2x4 Troffer	6		Energy Saving	Energy Saving Magnetic	3-F28T8-AB	6	(18)-F28T8	(6)-2-F28T8;(6)-1-F28T8	Standard	Electronic IS Low Watt	OS-2	1	2			114	63	4,030	1,233	3,224	305
263	263	Admin Second Floor	Engineering Services	A201	Open Office	3-F40T12-AB	2x4 Box, Open Box	65		Energy Saving	Energy Saving Magnetic	3-F28T8-AB	65	(195)-F28T8	(65)-2-F28T8;(65)-1-F28T8	Standard	Electronic IS Low Watt						114	63	5,044	16,721	5,044	0
264	264	Admin Second Floor	Library	A225	Library	3-F40T12-AB	2x4 Box, Open Box	4	4	Energy Saving	Energy Saving Magnetic	3-F28T8-AB	8	(24)-F28T8	(4)-2-F28T8;(4)-1-F28T8;(2)-4-F28T8(T);(2)-2-F28T8(T)	Standard	Electronic IS Low Watt	OS-2	1	4			114	63	4,264	1,757	3,411	427
265	265	Admin Second Floor	Lunch Room	A226	Commons	3-F40T12	2x4 Box, Open Box	9		Energy Saving	Energy Saving Magnetic	3-F28T8	9	(27)-F28T8	(9)-3-F28T8	Standard	Electronic IS Low Watt						114	62	5,044	2,361	5,044	0
266	266	Admin Second Floor	Private Office	A231	Private Office	3-F40T12-AB	2x4 Box, Open Box	4		Energy Saving	Energy Saving Magnetic	3-F28T8-AB	4	(12)-F28T8	(4)-2-F28T8;(4)-1-F28T8	Standard	Electronic IS Low Watt	OS-2	1	2			114	63	4,030	822	3,224	203
267	267	Admin Second Floor	Lobby	A230	Reception	3-F40T12-AB	2x4 Box, Open Box	4		Energy Saving	Energy Saving Magnetic	3-F28T8-AB	4	(12)-F28T8	(4)-2-F28T8;(4)-1-F28T8	Standard	Electronic IS Low Watt						114	63	5,928	1,209	5,928	0
268	268	Admin Second Floor	Copy Room	A233	Copy Room	3-F40T12	2x4 Box, Open Box	1		Energy Saving	Energy Saving Magnetic	3-F28T8	1	(3)-F28T8	(1)-3-F28T8	Standard	Electronic IS Low Watt	OS-2	1	1			114	62	3,484	181	2,787	43
269	269	Admin Second Floor	Conference Room	A234	Conference Room	3-F40T12-AB	2x4 Box, Open Box	2		Energy Saving	Energy Saving Magnetic	3-F28T8-AB	2	(6)-F28T8	(2)-2-F28T8;(2)-1-F28T8	Standard	Electronic IS Low Watt	OS-3	1	2			114	63	3,484	355	2,613	110
270	270	Admin Second Floor	Copy Room	A237	Copy Room	3-F40T12	2x4 Box, Open Box	2		Energy Saving	Energy Saving Magnetic	3-F28T8	2	(6)-F28T8	(2)-3-F28T8	Standard	Electronic IS Low Watt	OS-2	1	2			114	62	3,484	362	2,787	86
271	271	Admin Second Floor	Plan work Room	A238	Conference Room	3-F40T12	2x4 Box, Open Box	6		Energy Saving	Energy Saving Magnetic	3-F28T8	6	(18)-F28T8	(6)-3-F28T8	Standard	Electronic IS Low Watt	OS-3	1	2			114	62	3,484	1,087	2,613	324
272	272	Admin Second Floor	Storage	A239	Storage	3-F40T12	2x4 Box, Open Box		4	Energy Saving	Energy Saving Magnetic	3-F28T8	4	(12)-F28T8	(4)-3-F28T8	Standard	Electronic IS Low Watt	OS-2	1	2			114	62	1,976	411	1,581	98
273	273	Admin Second Floor	File Room	A240	Storage	3-F40T12	2x4 Box, Open Box	6		Energy Saving	Energy Saving Magnetic	3-F28T8	6	(18)-F28T8	(6)-3-F28T8	Standard	Electronic IS Low Watt	OS-2	1	2			114	62	1,976	617	1,581	147
274	274	Admin Second Floor	Men's Restroom	A245	Restroom	PL-26W	Recessed Can	7				NO CHANGE	7		(6)-3-F28T8			OS-1	1	2			32	32	4,264	0	3,411	191
275	275	Admin Second Floor	Women's Restroom	A244	Restroom	PL-26W	Recessed Can	7				NO CHANGE	7		(6)-3-F28T8			OS-1	1	2			32	32	4,264	0	3,411	191
276	276	Admin Second Floor	Telephone Room	A246	Private Office	2-F40T12	2x4 Box, Open Box	2		Energy Saving	Energy Saving Magnetic	2-F28T8	2	(4)-F28T8	(2)-2-F28T8	Standard	Electronic IS Low Watt	OS-2	1	1			72	41	4,030	250	3,224	66
277	277	Admin Second Floor	Janitor	A247	Private Office	2-F40T12	2x4 Box, Open Box	2		Energy Saving	Energy Saving Magnetic	2-F28T8	2	(4)-F28T8	(2)-2-F28T8	Standard	Electronic IS Low Watt	OS-2	1	1			72	41	4,030	250	3,224	66
278	278	Admin Second Floor	Open Office	A241	Open Office	3-F40T12-AB	2x4 Box, Open Box	55		Energy Saving	Energy Saving Magnetic	3-F28T8-AB	55	(165)-F28T8	(55)-2-F28T8;(55)-1-F28T8	Standard	Electronic IS Low Watt						114	63	5,044	14,148	5,044	0
279	279	Admin Second Floor	Hallway	A241	Hallway	2-F40T12-U	2x2 Troffer, Parabolic	2		Energy Saving	Energy Saving Magnetic	2-F32T8-U	2	(4)-FB32T8	(2)-2-F32T8	Standard	Electronic IS Low Watt	OS-4	1	1			72	48	5,044	242	4,035	97
280	280	Admin Second Floor	Hallway	A242	Hallway	2-F40T12-U	2x2 Troffer, Parabolic	3		Energy Saving	Energy Saving Magnetic	2-F32T8-U	3	(6)-FB32T8	(3)-2-F32T8	Standard	Electronic IS Low Watt	OS-4	1	1			72	48	5,044	363	4,035	145
281	281	O&M Shops	Mechanical Shop	205	Workshop	MH-1000W	Cable Mounted Can	12				NO CHANGE	12		(3)-2-F32T8								1080	1080	3,250	0	3,250	0
282	282	O&M Shops	Mechanical Shop	205	Workshop	MH-250W	Cable Mounted Can	14		Standard	Standard Magnetic	New-3-F54T5-HO	14	(42)-F54T5-HO	(14)-2-F54T5-HO;(14)-1-F54T5-HO	Standard	Electronic IS						294	182	3,250	5,096	3,250	0
283	283	O&M Shops	Mechanical Shop	205	Workshop	2-F40T12-U	2x2 Troffer, Parabolic		8	Energy Saving	Energy Saving Magnetic	2-F32T8-U	8	(16)-FB32T8	(4)-4-F32T8(T)	Standard	Electronic IS Low Watt						72	48	3,250	624	3,250	0
284	284	O&M Shops	Mechanical Shop	205	Workshop	1-F96T12	1x8 Strip Fixture	1		Energy Saving	Energy Saving Magnetic	2-F32T8	1	(2)-F32T8	(1)-2-F32T8	Standard	Electronic IS Low Watt				Retrofit Kit (8-foot to 4-foot)		78	48	3,250	98	3,250	0
285	285	O&M Shops	Mechanical Shop	205	Workshop	2-F40T12	2x4 Box, Open Box	7		Energy Saving	Energy Saving Magnetic	2-F28T8	7	(14)-F28T8	(7)-2-F28T8	Standard	Electronic IS Low Watt						72	41	3,250	705	3,250	0
286	286	O&M Shops	Mechanical Shop	205	Workshop	2-F40T12	2x4 Box, Open Box	1		Energy Saving	Energy Saving Magnetic	2-F28T8	1	(2)-F28T8	(1)-2-F28T8	Standard	Electronic IS Low Watt						72	41	3,250	101	3,250	0
287	287	O&M Shops	Mechanical Shop	205	Workshop	2-F40T12-U	2x2 Troffer, Parabolic	7	4	Energy Saving	Energy Saving Magnetic	2-F32T8-U	11	(22)-FB32T8	(7)-2-F32T8;(2)-4-F32T8(T)	Standard	Electronic IS Low Watt						72	48	3,250	858	3,250	0
288	288	Building Exterior	Building Exterior		Building Exterior	HPS-50W	Wall Mount	17				NO CHANGE	17		(7)-2-F32T8;(2)-4-F32T8(T)								60	60	3,650	0	3,650	0
289	289	Building Exterior	Building Exterior		Building Exterior	HPS-400W	Wall Mount	7				LED-147W	7	(7)-147W-LED									440	147	3,650	7,486	3,650	0
290	290	Building Exterior	Building Exterior		Building Exterior	HPS-250W	Shoe Box, Pole Mount	57				LED-100W	57	(57)-100W-LED									295	100	3,650	40,570	3,650	0
291	291	Building Exterior	Building Exterior		Building Exterior	HPS-400W	Shoe Box, Pole Mount	22				LED-147W	22	(22)-147W-LED									440	147	3,650	23,528	3,650	0
292	292	Building Exterior	Building Exterior		Building Exterior	MH-400W	Shoe Box, Pole Mount	12				LED-147W	12	(12)-147W-LED									458	147	3,650	13,622	3,650	0