GRANT APPLICATION MANUAL

ENERGY INNOVATIONS SMALL GRANT PROGRAM FOR NATURAL GAS

Solicitation 11-02G

Release Date: ~~August 15, 2011~~
January 18, 2012
Close Date: ~~October 12, 2011~~
~~February 29, 2012~~
~~March 29, 2012~~
April 11, 2012

PUBLIC INTEREST ENERGY RESEARCH
"Research Powers the Future"

TABLE OF CONTENTS

Part 1. COMMONLY ASKED QUESTIONS ABOUT THE ENERGY INNOVATIONS SMALL GRANT (EISG) PROGRAM 1

Part 2. ADDITIONAL INFORMATION REGARDING PROGRAM FEATURES AND REQUIREMENTS 5
- A. Pre-proposal Abstract 5
- B. Grant Application Processing 6
- C. Unfunded Proposals 10
- D. Grant Applicant Feedback and Disputes 10
- E. Resubmitted Proposals 10
- F. Policy Regarding Follow-On Funding 11
- G. Modifications 11
- H. Intellectual Property Rights 11

Part 3. GRANT APPLICATION INSTRUCTIONS 12
- A. Grant Application Package Checklist 12
- B. Project Summary 13
- C. Statement of Work 13
- D. Project Narrative 16
- E. Status of Development Effort 17
- F. Briefing Slides 17
- G. Proprietary Information 17
- H. Budget Narrative 18
- I. Unauthorized Expenses 18
- J. Allowed Direct Expenses 18
- K. Indirect Costs 20

Part 4 GRANT AWARD AGREEMENT 20
- A. Grant Agreement 20
- B. Grant Performance 21

LIST OF ATTACHMENTS

DOCUMENT NAME	ATTACHMENT
Grant Application Cover Page	FORM A
Certifications	FORM B
Project Schedule/Deliverables	FORM C
Proposed Budget Summary	FORM D
Project Personnel	FORM E
Status of Research Effort	FORM F
Recommended Reviewers	FORM G
Recommended Reviewer Disqualification	FORM H
Sample Non-Disclosure Agreement	Sample
Preference Points for California-Based Entities	Exhibit 1
California-Based Entity Form	Exhibit 2

Electronic submission in addition to one original and three copies of the grant application **must be received no later than 5PM on the "Close Date"** listed on the cover of this manual. Mail completed grant applications to appropriate address below.

Address if sent by US Post Office

Recommend you allow at least 4 days for Priority Mail and 7 days for Parcel Post. Proposals received after the close date will be returned.

EISG Program Administrator
San Diego State University Foundation
5250 Campanile Drive, MC1858
San Diego, CA 92182-1858

Physical address for FedEx, Express Mail, UPS or hand delivery

Proposals received after the close date will be returned.

EISG Program Administrator
6495 Alvarado Rd., Suite 103
San Diego, CA 92120
Phone: (619) 594-1049

Program Administrator Contact Information

Phone:	**(619) 594-1049**
Fax:	**(619) 594-0996**
Email:	**eisg@projects.sdsu.edu**

Note: Proposals must **not** be mailed or delivered to the Energy Commission offices in Sacramento, California.

Applicant Notification List

We recommend that all individuals or organizations that intend to submit a proposal to the **current** solicitation register their email address with the EISG Program Administrator in order to receive notification of any late changes to the application process. To register, send an email to eisg@projects.sdsu.edu and request your email address be added to the "**Applicant Notification List**". Contact information will only be retained for the current solicitation and must be renewed for each solicitation you intend to apply.

EISG Solicitation Notification

Individuals and organizations that desire to receive an e-mail notification of future EISG solicitations can subscribe to the EISG Solicitation Notification List by sending an email to the EISG Program Administrator, eisg@projects.sdsu.edu. In the subject line or body of the email indicate, "Subscribe to the EISG Solicitation Notification List". If you want the notification to go to a different email address than the address the email was sent from then indicate the email address you want the notification sent to.

The California Energy Commission, through its program administrator, is offering grant funding to both electricity and natural gas projects **that determine the feasibility of energy research and development concepts relating to the Public Interest Energy Research (PIER) Program.** This manual provides the information needed to establish applicant eligibility and to complete the application package for the natural gas part of the EISG program. In addition, this manual describes key program features related to proposal evaluation, approval, grant contracting, as well as assistance available to applicants during the application process and to grantees during the performance of grant projects.

This manual is revised each solicitation to address changes to the grant application process. Applicants must use the current version of the Grant Application Manual that is posted with the EISG solicitation on the EISG Solicitation web page (www.energy.ca.gov/contracts/smallgrant) where it is available for viewing and downloading in both PDF and Word format. A paper copy of this manual is available from the EISG Program Administrator upon request during an open solicitation. Requests may be submitted via email, fax or US mail (see page ii for contact information).

Part 1 answers the commonly asked questions about the program; Part 2 contains additional information regarding program features and requirements; Part 3 includes the application forms, and instructions for applying for grant funding; and Part 4 contains information pertinent to the Grant Agreement.

Part 1. COMMONLY ASKED QUESTIONS ABOUT THE ENERGY INNOVATIONS SMALL GRANT (EISG) PROGRAM

Answers to commonly asked questions about the Energy Innovations Small Grant Program are listed below to help you determine whether or not to apply for funding.

What is the difference between the Energy Innovations Small Grant (EISG) Program and the Public Interest Energy Research (PIER) Program?

The EISG Natural Gas Program is a component of the Public Interest Energy Research (PIER) Program that is managed by the California Energy Commission (Commission). The purpose of the PIER Program is to provide benefit to California electric and gas ratepayers by funding energy research, development and demonstration (RD&D) projects that are not adequately provided for by competitive and regulated energy markets. The entire PIER Natural Gas program started at $12 million in 2005 and will grow by $3 million annually to a maximum of $24 million per year. The Commission has a $21 million funding budget for the 2008 program. The funds for this solicitation will come from the 2008 natural gas PIER Program.

The Commission recognizes the need for a program to support the early development of promising new energy technology concepts, a niche not covered by PIER general solicitations that focus primarily on development of established concepts. The Commission established the EISG program to meet this need. In addition, to encourage participation in the program, the process for soliciting, evaluating and awarding grants has been simplified and streamlined.

Who can apply for grants?

Participation in the EISG Natural Gas Program is open to the following groups:

1. **Individuals:** Must be acting independently. If employed or affiliated with an organization, applicant must have authorization from the organization to pursue project development exclusively as an individual with no rights reserved to the organization. The individual, not the organization, retains all intellectual property rights accrued from the grant project.
2. **All businesses:** There is no restriction on the size of the business.

3. **Non-profit organizations:** Possess IRS tax exemption. Non-profit organizations that are already under contract to the Energy Commission to perform PIER related work outside of the EISG Program are prohibited from applying to the EISG Program.
4. **Academic institutions:** Public or private postsecondary institution.

Federal agencies, federal laboratories or Federally Funded Research and Development Centers (FFRDCs) are not eligible to apply directly but can serve as subcontractors on grant projects.

The Energy Commission reserves the right to limit participation in a particular solicitation to one or more of the four applicant groups and/or to the PIER natural gas R&D areas with criteria that target specific high priority research needs. If a solicitation is restricted by applicant type or program subject area, or contains criteria that target high priority research needs, these will be clearly identified in both the Grant Application Manual and the solicitation notice published on the EISG Solicitation web page (http://www.energy.ca.gov/contracts/smallgrant/index.html).

How much funding is available for each grant and the program?

A maximum of $95,000 for hardware projects requiring physical testing or $50,000 for modeling projects is available to Awardees per grant project.

Are matching funds and repayment of the grant required?

There are no matching funds or repayment requirements associated with the EISG Program. However, cost sharing is encouraged and is a consideration in the evaluation process.

What type of work is eligible for funding?

Proposals must meet **all** of the following criteria to be eligible for consideration under the EISG program:

(a) The proposed work must advance science or technology not adequately addressed by competitive and regulated markets;
(b) Propose an original innovative solution to a significant energy problem;
(c) Propose work that is still in the proof-of-concept phase;
(d) Address a California natural gas market need;
(e) Provide a clear potential benefit to California natural gas ratepayers;
(f) Target one of the following PIER R&D natural gas subject areas listed below;
    1. Natural gas energy efficiency
    2. Natural gas environmental impacts
    3. Renewable energy technologies
    4. Strategic analysis
    5. Advanced generation concepts
    6. Transportation Energy

(g) The proposal must include a California-based Entity (CBE) as either the recipient or a subcontractor. A CBE is a corporation or other business entity organized for the transaction of business that:
    1. Has its headquarters or an office in California; and
    2. Substantially manufactures the product or substantially performs the research within California that is the subject of the award.

(h) The proposal budget must allocate at least 80% of EISG funds to one or more CBEs.
(i) If the CBE is the recipient, the proposal budget must provide evidence that it will spend at least 80% of funds in California. If the recipient is not a CBE, the proposal budget must provide evidence that it will subcontract at least 80% of EISG funds to a CBE and that the

CBE will spend the funds in California. The 80% applies only to EISG funds and does not include the Applicant's matching funds.

(j) No more than 20% of the EISG funds may be subcontracted to non-CBEs.

(k) The proposed budget must document expenditure of EISG funds in California by indicating expenditures to subcontractors identified in the CBE form (Exhibit 2).

The proposals that are most competitive are those that speak with clarity and focus and:

1. Will establish the feasibility of concepts designed to advance energy science and/or technology beneficial to California's natural gas ratepayers;
2. Identify the research gaps that make the project necessary;
3. Describe the research tasks required to complete the project and identify all related performance objectives associated with each task.

A detailed description of the program areas can be found on the Commission web site at http://www.energy.ca.gov/research/index.html
Additional information can be found in the *PIER Program Natural Gas Program Plan and Funding Request for 2006* approved by the California Public Utilities Commission on December 15, 2005.

What type of work is not eligible for funding?

The following types of research and activities are **NOT** eligible for EISG funding:

1. Advanced development of concepts already proven feasible
2. Science or technology advances adequately addressed by competitive and regulated markets
3. Full scale prototyping when subscale or bench testing would be more appropriate
4. Planning and policy studies
5. Data gathering and reporting activities
6. Marketing and promotion activities
7. Market, literature or technology assessments/surveys
8. Technology demonstrations of existing technologies for public outreach/education
9. Product development, testing or validations normally done after research
10. Commercialization or certifications (e.g., UL Listing)
11. Research that is not PIER related and has no clear market connection
12. Meta-analysis studies
13. Electric research with little or no connection to natural gas markets except as authorized in the PIER program plan for natural gas.
14. Research that does not propose a clear solution to an existing energy problem
15. Research that seeks to identify a new energy problem or further define an existing energy problem with no focus on proving feasibility of a specific solution to the energy problem
16. Software development with no research or validation component

Applicants are cautioned about the development and/or use of non-commercial software for research and validation for hardware projects requiring physical testing. Software may be developed and used for modeling projects, only if the proposal uses an established standard or some other device or approach that will be used to independently establish the validity of the project results. Proposals that seek to establish theoretical feasibility through computer modeling and simulation must use commercially available computer modeling software.

Applicants that are in doubt about the suitability of a particular subject area or type of research are encouraged to submit an informal **2 page pre-proposal abstract** to the EISG Program Administrator for evaluation prior to submitting a full application. See Part 2.A. for additional details and format.

Can I submit more than one proposal in a solicitation?

Individuals, businesses and non-profit organizations are limited to submitting one proposal per solicitation. Academic institutions and their Foundations are limited to submitting no more than one proposal from any one principal investigator in a given solicitation. An individual who is also a sole proprietor is considered a single entity for the purpose of this policy. Multiple projects cannot be proposed in a single application. If more than one proposal is submitted the Program Administrator will accept the first proposal received or the first proposal logged in if more than one proposal is sent in the same package and will return the remaining proposal(s) to the applicant. In addition, a person cannot serve as a Principal Investigator or Project Manager on more than one EISG natural gas grant project at a time.

Can I submit a proposal if I received an EISG grant in an earlier solicitation?

EISG natural gas Awardees are allowed only one active natural gas EISG grant at a time. EISG natural gas Awardees cannot submit another proposal for consideration until the EISG Program Administrator has published an Independent Assessment Report on the Awardee's last natural gas grant project. An individual who is also a sole proprietor is considered a single entity for the purpose of this policy. In addition, a person cannot serve as a Principal Investigator or Project Manager on more than one EISG natural gas grant project at a time.

Can I submit the same proposal to the EISG Electricity, Natural Gas, and Transportation programs?

No. Applicants are currently limited to submitting the same energy concept proposal to either the EISG Electricity **or** the EISG Natural Gas **or** the EISG Transportation program. Even though the proposal **may** be applicable to all EISG programs, the applicant must choose the program in which the concept is most applicable. Please visit the website http://www.energy.ca.gov/research/innovations/index.html and click on Electricity, Natural Gas, or Transportation research and review the project subject areas available for funding.

When can I apply and how are the proposals processed?

Proposals will only be accepted by the EISG Program Administrator between the time an active EISG Solicitation Notice is posted on the program's solicitation web page and the proposal cutoff date specified in the solicitation. Proposals received by the Program Administrator before 5 PM on the cutoff date will proceed to initial screening as shown in Diagram 1, which depicts the selection process.

How can I obtain assistance with a proposal?

Applicants may request assistance from the Program Administrator in completing the administrative requirements of the Grant Application Manual. The Program Administrator recommends using your local university/college as a resource to locate technical experts that may assist with proposal preparation or serve as team members or subcontractors on the project. It is the responsibility of the applicant to negotiate the financial arrangement with the individuals or business and to include the cost in the proposed project budget. We recommend that all key arrangements with team members, contractors and facilities be made prior to submitting a proposal for evaluation since that will accelerate the award process if selected for funding. If the proposal passes initial screening and it is determined that the missing elements are such that an adequate technical evaluation could still be performed, the Program Administrator will send the proposal out for technical review. If the proposal is eventually recommended for funding the award will be delayed until the missing elements are identified and negotiated and all revisions submitted and approved by the Program Administrator.

How long does it take to receive funding if selected?

It takes approximately five to six months after the cutoff date to complete the proposal evaluation, approval and agreement execution process. Grant agreements may be in place with Awardees within four weeks of the Commission final approval of proposal funding if no delays are encountered. Work may begin as soon as the grant agreement is fully executed by the Program Administrator.

How long do I have to complete a grant project?

The period of performance on a grant project cannot exceed 12 months. All deliverables, including the Final Report, must be received during the stated term of the grant agreement. The principal investigator should plan a project term long enough to ensure that he/she will not need a term extension. A one time no-cost extension may be requested but only if unavoidable circumstances prevent completion of the project within the 12 month period of performance. No-cost term extensions are not automatic and require written justification and may adversely impact future follow-on funding decisions. Proposals need to be appropriately scoped to not exceed 12 months and if this is not possible then the project may not be suitable for the EISG program. The principal investigator should plan to complete the draft final report within the 12 month period.

Who do I contact for more information?

If you have any questions regarding the EISG Program, please contact the EISG Program Administrator:

EISG Program Administrator
San Diego State University Foundation
5250 Campanile Drive, MC 1858
San Diego, CA 92182-1858
Phone: (619) 594-1049
Fax: (619) 594-0996
Email: eisg@projects.sdsu.edu

In addition, questions addressed to the EISG Program Administrator that have broad applicability to applicants will be posted. Please look at the "Frequently Asked Questions" section in the EISG Program area of the Commission web site located at www.energy.ca.gov/research/innovations by clicking on the "See details" of the Transportation, Electricity, or Natural Gas Research grants.

Part 2. ADDITIONAL INFORMATION REGARDING PROGRAM FEATURES AND REQUIREMENTS

A. Pre-proposal Abstract

Applicants may email, fax or send through regular mail a pre-proposal abstract to the EISG Program Administrator for an evaluation of the project's applicability to the EISG Program. The abstract should include at a minimum a short description of the proposed concept (one page, no specified format) and the one-page Statement of Work specified in Part 3.C. of this manual. The preferred method of transmission is by email (**eisg@projects.sdsu.edu**) as an attached file (MS Word or PDF) or embedded in the body of the email. The Subject line for the email should include: "EISG Solicitation XX-XX pre-proposal abstract."

Assistance provided to the applicant as part of this pre-proposal process serves two purposes: (1) to help the applicant avoid the effort of preparing a full application on a topic that would fail initial screening; and (2) to provide suggestions that would strengthen the proposal in the technical evaluation process. The benefits

of number 1 can be achieved with a fairly short abstract whereas the benefits of number 2 increase directly in proportion to the number of project details provided. Assistance and advice provided during this process is no guarantee that the proposal will pass initial screening. Initial screening decisions are based on a review of the full proposal, not on pre-proposal abstracts. Pre-proposal abstracts may be submitted at any time up to the pre-proposal abstract cutoff date specified in the posted solicitation notice. All pre-proposals received will be reviewed in the order received and will receive a response usually within two weeks of submission. Individuals, businesses and non-profit organizations are limited to submitting one abstract per solicitation. Academic institutions and their Foundations are limited to submitting no more than one abstract from any one principal investigator in a given solicitation. Abstracts not submitted in the required format will not be reviewed.

B. Grant Application Processing

Grant applications will be processed in the following phases (as outlined in Diagram 1):

Diagram 1: Grant Proposal Selection Process

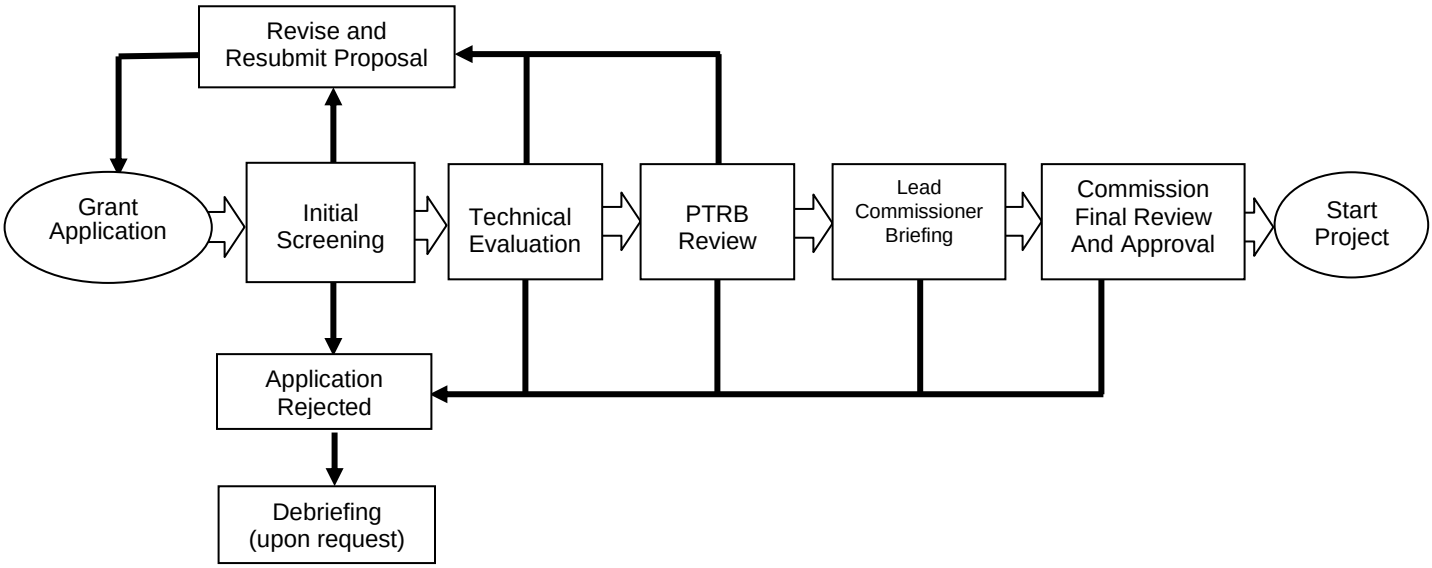

1. Grant Application.

Grant applications received by the EISG Program Administrator before 5 PM on the published cutoff date will enter the screening/evaluation process.

2. Initial Screening.

EISG Program Administrator staff will perform an administrative pass/fail review based on the criteria listed in Table 1 below.

Table 1: INITIAL SCREENING CRITERIA

CRITERIA	SCORE
1. Proposed research targets one or more of the PIER natural gas R&D areas	PASS/ FAIL
2. The proposal provides a clear vision of a market connection in California for the proposed technology that would benefit the natural gas consumers.	PASS / FAIL
3. Proposal provides sufficient information to assess technical merit and the potential	PASS / FAIL

impact the proposed innovation would have on the targeted energy problem	
4. Does not propose research or activities listed as ineligible in Part 1 of this manual	PASS / FAIL
5. Originality of proposed research is supported by comparison to the current state of the art to include: existing products, processes, services and prior research findings	PASS / FAIL
6. Proposes research that does not violate the known laws of science	PASS / FAIL
7. Proposed research is designed to explicitly prove concept feasibility	PASS / FAIL
8. Proposed research is not adequately covered by the competitive market	PASS / FAIL
9. If the goal of the proposed research is to achieve a CA mandated performance objective (e.g., emissions, energy efficiency, SEER rating, etc.) it must **exceed** current and future mandated performance targets that are already published to be eligible	PASS / FAIL
10. Certifications satisfy financial, legal and other requirements	PASS / FAIL
11. Form F is complete and indicates the proposed work is in the appropriate stage of development for the EISG program.	PASS / FAIL
12. Resubmitted proposals adequately address deficiencies noted in prior evaluation	PASS / FAIL
13. Application package is complete (all required forms are completed correctly)	PASS / FAIL

Proposals are placed in one of the following four categories after the initial screening:

1. Satisfies criteria and proceeds to Technical Evaluation.
2. Fails criteria, not eligible for resubmission for reasons that cannot be corrected by revision (notification letter will include the deficiencies identified).
3. Fails criteria, eligible for resubmission in a future cycle if revised to address noted deficiencies (notification letter will include the deficiencies identified).
4. May proceed to technical evaluation only if satisfactory clarifications regarding missing data or technical detail are received by the PA no more than 5 working days after receipt of request.

3. Technical Review (TR).

Technical reviewers may be from academia, industry or government. The applicant may recommend qualified technical reviewers that are independent from the project team and who are capable of conducting an unbiased evaluation with no conflict of interest. Recommendations are advisory in nature with final reviewer selection resting with the EISG Program Administrator.

Proposals that pass the initial screening will be scored by two to five technical reviewers with recognized expertise in the proposed subject area. The technical review will focus primarily on the proposal's technical merit. Technical reviewers will score each proposal on the degree to which it meets each of the Technical Criteria listed in items 1-8 in Table 2. Scores from multiple technical reviewers will be averaged to form a single composite score with a maximum of 50 points. The composite scores will be used to establish the proposal's preliminary rank order that is presented to the Program and Technical Review Board (PTRB). Proposals that receive a composite score below 26 from the technical reviewers will not be eligible for funding in the current cycle and therefore will not advance to the PTRB. In order to provide additional information to the PTRB, the technical reviewers will be asked to comment on (1) market connection and (2) similarity to pre-existing or concurrent research.

Table 2: TECHNICAL REVIEWER (TR) SCORING CRITERIA AND ALLOCATED POINTS

TECHNICAL CRITERIA	Points
1. Does the proposed research target an important energy problem?	4
2. Will the proposed innovation significantly impact the targeted energy problem?	4
3. Is the scientific approach sound and sufficient to determine concept feasibility?	4

4. Is the proposed research original and innovative and adequately supported by comparison to the current state of the art to include: existing products, processes, services and prior research findings?	4
5. Is the proposed concept practical?	3
6. Are the project team members qualified to perform the proposed work?	3
7. Are the amount and use of funds requested appropriate for the work proposed?	3
8. Overall technical merit (taking all factors into consideration)	25
Maximum Technical Reviewer Points:	**50**
ADDITIONAL QUESTIONS	**Yes/No**
1. Does the proposal provide a reasonable vision of a market connection in California for the proposed technology that would benefit natural gas consumers?	
2. Based on your knowledge of the proposed line of research, is there a high probability that the same or similar research is already being funded by industry?	

4. Program and Technical Review Board (PTRB)

The PTRB is tasked with screening and scoring of the proposals that remain eligible after technical review as well as reviewing the EISG Program policies, procedures and documents and making recommendations for changes to the Energy Commission's EISG Program Manager.

Approximately 12 weeks after the proposal cutoff date the PTRB meets to screen and score the proposals that received a TR composite score of 26-50. The PTRB is allocated a maximum of 50 points based on the criteria and scoring weights shown in Table 3. The PTRB will first review all available information on each proposal (proposal, PA input, TR comments and PTRB input) and determine if the proposal still satisfies all of the screening criteria listed in Table 1. Proposals that fail one or more of the screening criteria will be disqualified from further consideration in the current cycle and will not be included in the Final Rank Order of proposals. When the PTRB disqualifies a proposal the board will also determine if the proposal is eligible for resubmission in a future cycle. Proposals that pass PTRB screening will be scored by the PTRB in accordance with the criteria shown in Table 3 below.

Table 3: PTRB SCORING CRITERIA AND ALLOCATED POINTS

CRITERIA	PTRB
Technical Merit Criteria	**10**
1. Is the scientific approach sound and sufficient to determine concept feasibility?	
2. Is the proposed research original and innovative and adequately supported by comparison to the current state of the art to include: existing products, processes, services and prior research findings?	
3. Is the proposed concept practical?	
4. Are the amount and use of funds requested appropriate for the work proposed?	
5. Are the project team members qualified to perform the proposed work?	
Programmatic / Policy Criteria	**10**
1. Does the proposed research target one or more of California's six Energy Policy Actions?	
2. Does the proposed research target an energy problem important to an Energy Action or one of the longer term research priorities of a PIER area?*	
3. Will the proposed innovation significantly impact the targeted energy problem?	
4. Does the proposed innovation provide a potential benefit to CA natural gas consumers?	
5. Does a viable market connection exist for the proposed innovation?	
6. Is the proposed research likely covered by competitive markets?	
7. Is the project at an appropriate development stage for an EISG grant?	
Overall Merit (taking all factors into consideration)	**30**

Maximum PTRB Points:	**50**
****Qualifying CBE Preference Points**	**24**

*Please refer to EISG home page for PIER longer term research priorities located at http://www.energy.ca.gov/research/innovations/longterm_priorities.html

**Please refer to Exhibit 1 and Exhibit 2 for CBE preference points and application form.

5. Final Rank Order and Funding Recommendations.

The PTRB scores are added to each proposal's prior composite technical review score to establish each proposal's final composite score (max. 100 points). Pursuant to AB2267 (Fuentes 2008), California based businesses may receive additional preference points (see Exhibit 1 and Exhibit 2). The final composite score is used to create the final rank ordered list of proposals. Based on available funding and the quality of the top ranked proposals the PTRB will recommend one or more funding cutoff lines. The funding recommendations are forwarded to the Energy Commission's EISG Program Manager.

6. Lead Commissioner Briefing (LCB)

The EISG Program Manager will present the PTRB recommendations at the LCB. The LCB will review the PTRB grant recommendation process to ensure it is based on fair and unbiased procedures. Based on the PTRB recommendations and Energy Commission program considerations, the LCB may provide advice and guidance to the Energy Commission EISG Program Manager. The Energy Commission may disapprove any or all grant project recommendation(s) for reasons that may include the following:

(a) The project is counter to the development and implementation of a robust public interest RD&D portfolio of projects that address California's energy needs through any of the PIER natural gas subject areas;
(b) The project is counter to the objective of balancing risks, timeframes and public benefits in a manner consistent with California's energy policies;
(c) The project is counter to the objective of creating a public interest RD&D knowledge base and disseminating information that will allow citizens, businesses, government and other entities to make informed decisions concerning energy technologies and services;
(d) The project is counter to the objective that the public interest RD&D program is to be connected to the market;
(e) The project is counter to the energy policies of the State of California[1].
(f) The applicant's prior performance on a PIER funded project was unsatisfactory with regard to budget, schedule or reporting performance.
(g) The proposed project fails one or more screening criteria identified in the Grant Application Manual.

Any proposal disapproval will not affect the score of any other proposal.

[1] Policies for PIER and for energy in California are expressed in policy documents and in statute. Important statutes are Public Utilities Code, sections 399 and 25620. Important policy reports are the Integrated Energy Policy Report (http://www.energy.ca.gov/2005_energypolicy/index.html), the Energy Action Plan II (http://www.energy.ca.gov/energy_action_plan/index.html), and the Five-Year Investment Plan, 2007 Through 2011 for the Public Interest Energy Research (PIER) Program (http://www.energy.ca.gov/2006publications/CEC-500-2006-016/CEC-500-2006-016-D.PDF. CPUC decision, D. 04-08-010 (http://www.cpuc.ca.gov/WORD_PDF/FINAL_DECISION/39314.doc)

7. Energy Commission Business Meeting

The list of grant projects will be considered for approval at a regularly scheduled business meeting. The Commission reserves the right to reject any or all of the grant project recommendations.

Energy Commission approval of grant projects is anticipated to occur within 20 weeks of a particular solicitation cutoff date. Another two to four weeks is required to execute grant agreements on projects that received funding approval. Projects that receive full Commission approval for funding will be posted on the EISG Program area of the Commission web site within five business days after the business meeting action and will receive an award letter within one to two weeks.

C. Unfunded Proposals

Applicants whose proposals were not funded will receive a letter from the Program Administrator that summarizes the proposal's current status and whether or not the proposal is eligible for resubmission. If the proposal advanced to technical review the letter will include the proposal's relative standing and copies of the technical reviews. Proposals that either fail three times or advanced to technical review in two solicitations and were not selected for funding, are not eligible for resubmission. All solicitation results are final and may not be contested.

All materials submitted in response to an EISG solicitation become the property of the State of California for disposition purposes. Except for a file copy that is retained for future reference, all extra copies of the grant application will be shredded at the end of the evaluation process.

D. Grant Applicant Feedback and Disputes

An applicant may obtain a debriefing regarding an unfunded proposal in the following two ways:

1. By emailing the Program Administrator to schedule a phone meeting to discuss the proposal.
2. By submitting a written (letter or email) list of questions or issues within 30 days of receiving the status letter on the proposal in question. The Program Administrator will respond to written inquiries in writing (letter or email) within 30 days.

E. Resubmitted Proposals

Applicants who desire to resubmit a proposal that was not funded in an earlier solicitation must satisfy the following requirements:

1. Receive a status letter from the Program Administrator that states that the proposal is eligible for resubmission.
2. Comply with all new requirements specified in the grant application manual posted with the solicitation that the proposal is being resubmitted in. You cannot use the old grant application manual that you used when you originally submitted.
3. Submit an electronic copy via email, Word or PDF, and one original and 3 copies of the revised proposal and indicate on Form A, Item h, of grant application, the proposal number(s) assigned to prior submission(s) related to the same concept.
4. Provide a resubmission summary (5 pages max.) in table or outline format that identifies and responds to the concerns noted in the previous evaluation of the proposal (see sample table format below).

SAMPLE RESUBMISSION SUMMARY

Concerns	Response	Page
1) Project team lacks experience in fuel cells.	Added Dr. Smith to team, see attached resume.	Form E
2) Theory of operation was not explained with sufficient technical detail to enable assessment of its technical merit.	Added expanded technical description of theory of operation.	Pg 4-5
3) The material to be tested was already evaluated by Dr. Smith.	*Rebuttal*: Dr. Smith only tested for properties A & B whereas this project will look at properties C& D.	N/A

A resubmission summary that fails to adequately address all significant concerns noted in the prior evaluation will be sufficient grounds to **fail Initial Screening**. The resubmission summary pages do not count against the allowed page count for the narrative or appendices. Resubmitted proposals that had advanced to technical review in the prior submission are sent back to the original technical reviewers (if possible) for rescoring based on the additional information in the proposal and Resubmission Summary. For proposals that failed Initial Screening in the prior submission the Resubmission Summary will be reviewed by the EISG Program Administrator staff only and will not be sent to the technical reviewers.

F. Policy Regarding Follow-On Funding

The EISG Program was designed to serve as a one-time funding source for projects seeking to establish initial concept feasibility. The EISG Natural Gas Program does not accept proposals for follow-on funding, however, the main PIER Natural Gas Program will continue to accept proposals that are responsive to formal solicitations. Past performance on an EISG grant will be a consideration in any future request for funding through the PIER Program.

G. Modifications

To make a project acceptable, the Commission or Program Administrator retains the right to negotiate minor changes to a proposal's work statement and/or budget at any time during the evaluation, approval and agreement execution process. Such modifications would be made to:

1. Adjust the project scope to produce the information needed to assess concept feasibility;
2. Adjust project budget to comply with guidelines related to authorized expenses;
3. Avoid duplication of work;
4. Reduce administrative requirements;
5. Include tasks necessary for project success; and/or
6. Improve clarity by eliminating ambiguous or confusing language.

Proposals that require major changes will be sent back to the applicant for revision with the option to resubmit in a future cycle.

H. Intellectual Property Rights

Copyrightable material and all patent rights for inventions conceived or first actually reduced to practice in the course of the grant project will be the property of the Awardee subject to the State retaining certain limited use rights (see Model Grant Agreement document for details). The Awardee must disclose to the EISG Program Administrator, on a confidential basis, all such inventions. All materials submitted in the performance of the grant will become the property of the State of California for disposition purposes. The EISG Program Administrator will take reasonable precautions to protect the intellectual property rights of the applicants and Awardees by requiring all personnel who handle, screen or review proposals and

deliverables containing proprietary/confidential information to sign a non-disclosure agreement (see sample non-disclosure agreement attached to the end of this manual).

Part 3. GRANT APPLICATION INSTRUCTIONS

A. Grant Application Package Checklist

The full application will serve as the official submittal to the EISG Program Administrator that will be formally evaluated and scored. Include all information necessary to adequately review the proposal, including all information requested in this Manual. Do not incorporate by reference, information contained in the pre-proposal abstract, DVDs, websites, or other materials. The evaluation of the final application will be the basis for approving or denying funds for the proposed project**.**

Electronic submission is required. You must also mail the original hardcopy and 3 full single-sided copies including any supporting documents. The original should be bound only with a spring clip; the other three copies should be bound only with a staple in the upper left corner. **No covers or other types of bindings are allowed.**

For electronic submission: The Subject line for the email should include: "EISG Solicitation XX-XX proposal." The email must identify the Principal Investigator and the title of the proposal, and should state the following: "The attached application constitutes [Institution Name]'s official submission of a proposal in response to EISG solicitation XX-XX." The email must give the title of the authorized institutional representative (e.g., Contracts and Grants Officer), and provide contact information, including address, phone, and fax. Please note: Proposals should be electronically (Microsoft Word preferred) submitted as **one file**. File size should not exceed 10MB without notifying the EISG Administrator to make accommodations. Letters of support and briefing slides may be sent as an additional PDF file.

Following electronic submission, if you do not receive an email confirmation, within one business day, of receipt from the EISG Administrator that your electronic application was received, you must call to confirm that your application was received before the deadline. If an applicant claims to have submitted a proposal, but no confirmation notice was sent by the EISG Administrator, the proposal will not be accepted. Proposals sent to the California Energy Commission will not be accepted. Fax copies will NOT be accepted.

Final applications that have not been electronically submitted, do not include at least one (1) signed original hard copy and three (3) copies, and have not been received by the EISG Program Administrator office by 5:00 PM on the advertised cutoff date will not be included in the current evaluation cycle.

The application package **must be assembled in the order shown in the checklist below**. Additional instructions for filling out the forms are provided with each form.

Original copy should be bound only with a spring clip. Remaining copies should be bound only with a staple in the upper left corner. **No covers or other types of bindings are allowed**.

- ☐ Form A: Grant Application Cover Page *(signed and dated)*
- ☐ Project Summary *(1 page max, insert page break after project summary)*
- ☐ Statement of Work *(1 page max, outline format, insert page break after SOW)*
- ☐ Project Narrative *(10 pages max.)*
- ☐ Appendices to Narrative *(optional - 10 pages max.)*
- ☐ Form B: Certifications & Disclosures
- ☐ Form C: Project Schedule / Deliverables

- ☐ Form D: Proposed Budget Summary *(attach short budget narrative if required)*
- ☐ Form E: Project Personnel
- ☐ Key Personnel Resumes *(A maximum of two pages per person/organization. Required for PI and Project Manager, if they are separate individuals, optional for other team members.)*
- ☐ Form F: Status of Research Effort (filled in form should not exceed 2 pages)
- ☐ Exhibit 2 for each CBE *(see Exhibit 1 for details)*

The following items should be loose or clipped to cover letter and not bound with the proposal copies

- ☐ Cover Letter *(optional, one copy)*
- ☐ Form G: Recommended Reviewers *(optional, one copy)*
- ☐ Form H: Recommended Reviewer Disqualification *(optional, one copy)*
- ☐ Resubmission Summary *(5-pages max., Resubmits only-see Part 2.E. for details, 4 copies)*
- ☐ Briefing slides for PTRB *(optional –see Part 3.F for details, 3 slides max., 1 paper copy only)*

B. Project Summary

Provide a one-page summary description of the grant project. Format requirements include: margins no less than 1", font size no smaller than 12 pt. and single or double-spaced. Title the page with "Project Summary" followed by the project title and name of the principal investigator. The project summary should summarize the key items requested in the recommended narrative format specified in Part 3.D with particular emphasis on any new innovations that will be tested as part of the project. The project summary needs to be on its own dedicated page.

The description should be written at a level that could be understood by the general public with sufficient information to stand on its own. Although the technical review will be performed on the entire proposal, the project summary may be all that some board and committee members see when exercising their review functions at the later stages of the review process. The project summary may contain proprietary information. If a proprietary proposal is selected for funding, you will be asked to provide a non-proprietary version of the project summary for web publication.

C. Statement of Work

The Statement of Work must conform to the format specified in this section. Provide a one-page Statement of Work in outline form that identifies the project goal, project tasks with performance objectives and reporting requirements detailed below. The physical format requirements include: margins no less than 1", font size no smaller than 12 pt., single or double-spaced. Title the page with "Statement of Work" followed by the project title and name of the principal investigator. The Statement of Work needs to be on its own dedicated page.

Project Goal: The goal statement must identify the specific feasibility issue(s) being addressed in this project. The goal statement must start with the words "*The goal of this project is to determine the feasibility of….*". The following are some sample goal statements:

(1) The goal of this project is to determine the feasibility of using a segmented gas turbine surface burner to increase combustion stability across the full operating range to further reduce emissions.

(2) The goal of this project is to determine the feasibility of using a torque based airflow measurement device to more accurately measures airflow in ventilation systems.

(3) The goal of this project is to determine the feasibility of a low cost circuit design that allows central air conditioners with three phase motors to operate on single-phase power with a 10% energy savings.

Project Tasks - Performance/Cost Objectives: Create a two-column table as shown in the sample below with the first column labeled "Project Tasks" and the second column labeled "Performance/Cost Objectives". Applicants must evaluate each task to identify any performance/cost objectives associated with the task that will be validated during the project. Tasks typically start with words such as: fabricate, build, assemble, design, complete, optimize, modify, analyze, evaluate, conduct, perform, identify, develop, acquire, install, prepare, test, run, determine, formulate, create, select, integrate, operate, etc. All primary tasks identified should also be listed in the Project Schedule (Form C). **Performance or cost objectives are mandatory for all tasks in which performance or cost objectives are possible.** The performance objectives serve as objective benchmarks that determine project success and serve as the foundation of the Final Report. **Proposals that fail to identify measurable performance objectives will fail initial screening.** Performance objectives must have a numeric or qualitative performance target to be listed as a performance objective. If it reads like a task, it belongs on the left side of the table – no exceptions. The following is a list of sample performance objectives that meet the stated criteria:

Samples of measurable (numeric targets) Performance Objectives

(1) Demonstrate that the test setup and test protocols will measure the pressure and temperature conditions with an error of +/- 5%.
(2) Demonstrate that the computer model/simulation represents reality within an error of +/-10%.
(3) Demonstrate that the proposed sensor is capable of measuring methane concentrations from 10%-80% volume with +/- 2% accuracy across the measurement range.
(4) Demonstrate the capability of the proposed 2-stage digester to produce a H_2 to CH_4 volumetric ratio of 3 to 1.
(5) Demonstrate an overall digester retention time of less than 4 hours to achieve the targeted methane production.
(6) Demonstrate that the proposed process is capable of converting 95% of the organic matter in the feed material to gas.
(7) Demonstrate that the proposed roofing material will maintain the roof deck at no more than 10 degrees above ambient temperature.
(8) Demonstrate that the proposed engine can function in a temperature range of –30 deg C to 125 deg C.
(9) Confirm that the proposed manufacturing process can reduce the number of manufacturing steps from 10 to 6 and reduces manufacturing time by 20%.

Samples of qualitative Performance Objectives

(1) Confirm through visual inspection that no visible signs of corrosion, erosion or deposition are present in the combustion chamber after 500 hours of operation.
(2) Achieve an aesthetically pleasing appearance for the proposed building integrated PV system as confirmed by a randomly selected test group of potential consumers.
(3) Demonstrate that the proposed thin film manufacturing process is capable of producing a uniform nanostructured film as confirmed by microscopic analysis.
(4) Demonstrate that the proposed motor can be operated in any orientation without impact on performance.
(5) Demonstrate that the prototype fluorescent lamps provide equivalent or superior visual performance with fewer radiant watts than existing fluorescent lamps as confirmed by randomly selected test subjects.

Reporting Requirements: Under this heading enter the statement "*Submit Progress Reports and Final Report in accordance with the proposed Project Schedule/Deliverables Chart.*"

The Statement of Work may contain limited proprietary information. If a proprietary proposal is selected for funding, the applicant must provide a non-proprietary version of the Statement of Work for web publication.

The following is a sample of the required format for the one-page Statement of Work:

Statement of Work
Energy Efficient Rotary IC Engine with Low Emissions
John Smith, Principal Investigator

Project Goal: The goal of this project is to determine the feasibility of using new low friction seals and a new bearing design to increase engine efficiency and reduce emissions below mandated levels for stationary power generation.

Project Tasks	Performance / Cost Objectives
1) Finalize system design. a) Complete CAD drawings.	
2) Fabricate 2 subscale prototype devices.	1) 1st prototype will demonstrate 5kW capacity 2) 2nd prototype will demonstrate 10kW capacity
3) Fabricate a test stand. a) Install instrumentation to record X and Y parameters.	Demonstrate that the test stand is capable of measuring X and Y parameters within an error of +/- 5%.
4) Finalize test plan. a) Obtain EISG PA approval of test plan.	
5) Conduct Prototype testing. a) Conduct static testing. b) Conduct dynamic testing.	1) Demonstrate NOx emissions of less than .07 lb/MW-hr (emission targets must be in lb/MW-hr). 2) Demonstrate engine efficiency between 40-45%. 3) Demonstrate that device can operate at least 500 hours without failure.
6) Perform manufacturing cost analysis.	Confirm from the project findings that the projected manufacturing cost of $500/kW capacity continues to be supported.
7) Perform life cycle cost analysis.	Confirm from the project findings that the projected life cycle cost of power generated from the proposed device of $.05/kWh continues to be supported.

Reporting Requirements:
Submit Progress Reports and Final Report in accordance with the proposed Project Schedule/Deliverables Chart.

D. Project Narrative

Provide a project narrative that is no more than 10 pages in length (not counting reference list or acronyms list) that describes the project plan in detail. Key supporting documents referenced in the narrative such as photos, charts, drawings, blueprints, graphics, letters of support and excerpts from key articles may be included as appendices to the project narrative. Appendices are restricted to a maximum of 10 pages. Layout requirements for the narrative include: margins no smaller than 1", font size no smaller than 12 pt, single or double-spaced and pages must be printed single-sided. The project narrative **must address** the content items identified in the following recommended outline; however the applicant may determine the sequence in which the information is presented. Project narratives that cite past research, trade publication articles, etc. must include a reference list and if the project narrative contains acronyms an acronym list needs to be included.

Project Narrative

1) Project Goal
   (a) Briefly describe in one or two sentences the concept feasibility issue(s) that will be addressed in the project. If the proposed technology feeds into a larger development effort provide the context for how this work fits into the larger project.
2) State-of-the-Art
   (a) Summarize the relevant results of a current literature/Internet search. Point out where your work will extend the existing knowledge base. This is a very important area that can make or break a proposal in the evaluation process.
   (b) Compare existing products, processes, and/or services that perform the same or similar functions as the proposed concept. Clearly show the relevant differences (i.e. cost, reliability, efficiency, functions etc.). Recommend comparison data be placed in table format when practical.
3) Energy Problem Targeted
   (a) Identify the energy problem that is being addressed.
   (b) If the proposed research targets a PIER Natural Gas research issue identify the connection
4) Primary Project Tasks and their associated Performance Objectives.
   (a) Discuss the project tasks from the Statement of Work in greater detail and discuss the significance of the performance objectives as they relate to the current state of the art.
5) Technical Feasibility Issues
   (a) Identify the technical obstacles that this project seeks to overcome.
6) Proposed Innovations
   (a) Identify the specific innovations that will be tested in this project. The more creative and innovative the proposed solutions, the more competitive the proposal will be.
   (b) Provide sufficient technical details to assess the concept's technical merit. This includes drawings and illustrations where appropriate to supplement written descriptions.
7) Impact on Energy Problem / Benefit to California natural gas consumers
   (a) Quantify the potential impact to the natural gas consumer in terms of savings due to reduced cost reduced consumption, emissions reduction, increased reliability, improved product features etc.
   (b) Quantify the potential benefit in terms of energy and cost savings to the state of California as a whole. Cite the source of any statistical information that you use, including web URLs.

8) Market Connection

(a) Identify who would adopt, benefit, manufacture, sell or buy the results of the innovation if proven feasible.

Applicants should take into consideration the evaluation criteria listed in Part 2.B. when writing the narrative. Applicants are encouraged to obtain letters of support from industry that express interest in the technology being proposed since such letters hold significant weight when evaluating the concept's market potential, particularly when the proposed concept targets a narrow market niche or proposes an unconventional alternative to existing technologies. Market connection can also be supported by trade journal articles, market surveys or letters of support from members in the target market (architects, home owners, building contractors, HVAC contractors, manufacturers, etc.) who are familiar with the concept being proposed.

E. Status of Development Effort

Grant applicants are required to complete Form F "Status of Research Effort" as part of the grant application. The purpose of this form is to help the EISG program administrator understand what development activities have already been completed and to determine if the proposed work is at the appropriate stage of development for the EISG program. Concepts must be sufficiently developed to provide a clear well defined solution to an energy problem and in most cases be ready for initial subscale or bench scale prototype fabrication and testing but not developed beyond early proof of concept. Some exceptions are allowed in cases where development has advanced beyond initial prototyping but continues to have technical problems that need to be solved to be commercially viable.

F. Briefing Slides

Proposals that pass initial screening and score 26 and higher in technical review will be briefed to the PTRB members prior to their scoring. Grant applicants have the option to provide up to 3 paper slides (B&W or color) that can serve as a visual aid to assist the PA staff in briefing the project to the board members. Pictures, drawings or graphical representations of complex designs or processes are most useful. Word slides are of little value and may not be used. Since the technical reviewers will not see the slides they should not be referenced in the proposal unless the slides came from the proposal. This is the applicant's opportunity to provide information that would help the board members to quickly visualize the work being proposed. A color camera overhead projector will be used to project the paper slides which cannot exceed 8.5" x 11" in size. They can be in either landscape or portrait orientation. If no slides are provided, the PA will select the most appropriate pages out of the proposal to display.

G. Proprietary Information

If the proposal contains proprietary information, as indicated on Form A, Item g., then the applicant **must clearly mark those sections** in the application that are proprietary. We recommend that you use a colored highlighter to manually highlight the proprietary text or to place a box around the proprietary sections in all four copies. If an entire page is proprietary a designator at the top and bottom of that page is acceptable. Applicants are encouraged to limit the proprietary information to only that which is necessary to adequately assess the technical merits of the proposed concept. Classifying the majority or entire proposal as proprietary is **not acceptable** and will result in its rejection.

Appropriate procedures to safeguard proprietary information will be employed by the EISG Program Administrator, the Commission, its subcontractors and technical reviewers.

H. Budget Narrative

Attach a short budget narrative to Form D (Proposed Budget) to itemize and explain any expenses listed in lines 3.a. – 3d (travel, facilities lease, equipment rental, major equipment purchase). Line 3.d. (Major Equipment Purchase) is reserved for items with a unit cost greater than $5,000. If an indirect expense is charged, indicate in the budget narrative how it was calculated. Explain any unusually large budget items.

I. Unauthorized Expenses

The following costs are NOT allowed in EISG projects:

1. Costs incurred by applicants in preparing proposals (including travel and personal expenses), project debts or costs incurred before Commission approval and the effective date of the grant agreement.
2. Costs for lobbying or attempting to influence any public official.
3. Costs associated with protecting intellectual property.
4. Cost to offset obligations of individuals or work not associated with the approved project.
5. Procurement of general-purpose equipment (e.g. general-purpose computers, software, fax machines, copiers, office furniture and tools) that could be leased or rented at lower cost.
6. Cost of news releases announcing the results of an EISG project.
7. Relocation costs of employees or staff members.
8. Financial aid, scholarships, or fellowships, except when paid under established campus policy as part of the compensation for research performed in the EISG project during the term of the contract.

J. Allowed Direct Expenses

1. <u>Salaries, Wages and Fringe Benefits</u>

Labor expenses accrued by the Awardee and team members during the term of the grant agreement are allowable to the extent that they meet the following criteria:

(a) The compensation is reasonable for each individual's skill level and experience and conforms to consistently applied compensation policies of the individual's organization.
(b) Fringe benefits are allowable as a direct cost (if not included as an indirect cost) in proportion to the salary charged to the grant and provided the expense is based on formally established and consistently applied compensation policies of the individual's organization. If a student receives compensation for hours worked and tuition fees show the tuition as a separate line in Section 1 of Form D (Proposed Budget). A maximum of one graduate student tuition remission for one year is allowed. Applicants who apply as an "*Individual*" cannot charge Fringe and should show a fully loaded hourly rate instead.

2. <u>Consultant Services</u>

Payments to consultants are allowed provided the costs are reasonable and commensurate with the services provided and are included and itemized in the approved budget for the grant. There are no restrictions on who an applicant can subcontract with or how much work may be subcontracted out provided the subcontracts include the carry through clauses specified in the grant agreement (drug free workplace, debarment, intellectual property, etc.). **Cost estimates/quotes from consultants/subcontractors must**

be submitted with the proposal. The letters should outline their tasks for the project with an estimated cost.

3. Travel Costs

Travel costs of Awardees are allowable if they are required to conduct the research and are reasonable for a small grant effort. Conference travel is allowable if it occurs towards the end of a project for the purpose of presenting a paper on the results of the research. Applicants should consider cost sharing conference travel in excess of $1500 or risk having the travel deleted from the budget. For travel to be reimbursed it must occur within the term of the project as specified on the grant agreement. The purpose of each travel trip must be specified in the budget narrative that is attached to Form D. Reimbursement of travel expenses will be in accordance with the guidelines contained in the grant agreement. Total travel costs over $3,000 may be considered excessive for a small grant depending on the nature of the research. Applicants should consider cost sharing excessive travel costs since it may be considered an inappropriate use of grant funds in the review process.

4. Facility Lease/Modification

The cost of leasing or renting commercial workspace is acceptable, however, individuals cannot charge rent for any portion of their private residence and a business that charges an indirect rate cannot charge a lease expense for space or equipment that they already own. EISG grant funds cannot be used to fund construction or facility improvements. However, rearrangement and alteration costs to adapt space or utilities within a completed structure to accomplish the objective of the grant-supported activity that do not constitute construction, and aggregate to less than $10,000, may be allowable provided that the requirement is clearly defined in the budget narrative.

5. Equipment Rental or Lease

The cost of renting or leasing equipment is allowable provided the charges are reasonable and itemized and explained in the budget narrative.

6. Major Equipment Purchase and Disposition (unit cost of $5,000 or more)

Within the EISG Program, major equipment is defined as non-expendable, tangible property, which has an acquisition, cost of $5,000 or more per unit. All major equipment that applicants intend to purchase with grant funds must be included in the budget and itemized in the budget narrative that is attached to Form D (Proposed Budget Summary). All equipment with a unit cost of $5,000 or more will be purchased exclusively by the EISG Program Administrator and will be subject to the following terms and conditions:

(a) Title to all non-expendable equipment purchased with EISG Program funds shall remain with the State of California (California Energy Commission).
(b) The Awardee shall assume all responsibility for maintenance, repair, destruction and damage to equipment while in the possession of or subject to the control of the Awardee (costs for maintenance and insurance may be borne by the grant).

Major equipment purchases will be considered allowable as direct costs provided the equipment is:

(a) Necessary for completing the primary objectives of the grant research.
(b) Renting or leasing the equipment at lower cost was not an option.

Upon completion of the project or termination of the grant contract, the Commission may:

(a) Request that such equipment be returned to the Commission with any costs incurred for such return to be borne by the Commission.

(b) By mutual agreement, permit the EISG Program Administrator or Awardee to purchase such equipment for an amount not to exceed the residual value of the equipment as of the date of termination of the grant agreement.
(c) Transfer ownership of equipment to the EISG Program Administrator, an academic institution or the Awardee. If an Awardee desires to obtain ownership of the equipment a request must be submitted at the end of the project that includes a description of how the equipment in question would be used to further energy research.

7. Final Report

$5,000 will be withheld pending receipt and approval of the final report and any outstanding deliverables.

8. Materials, Supplies, Equipment and Miscellaneous Expenses

Standard materials, supplies, equipment and miscellaneous expenses are allowed that are typical for a grant research project. This budget line is used to identify all remaining expenses that are not covered by the other budget lines. Line 3.e.(1) should be used to consolidate all small expenses with a unit cost less than $100.

General-purpose equipment (i.e., computers, printers, furniture, test equipment, tools, software) may be rented but not purchased unless renting is more expensive or not practical. In those instances where a case can be made for purchasing general-purpose equipment, provide the rationale in the budget narrative. General-purpose equipment that is purchased must be listed as a deliverable on Form C. Disposition of general purpose equipment at the end of the project will be determined by the Program Administrator. General-purpose equipment such as computers that are needed for performing experimental functions such as data logging may be purchased and need not be listed as a deliverable. General-purpose equipment and supplies may not be purchased if the items are included in the indirect calculation.

K. Indirect Costs

Businesses, non-profits and academic institutions that choose to recover indirect costs must use an approved rate from an authorized agency such as the Defense Contract Audit Agency (DCAA) up to a maximum rate of 25%. If the indirect rate has not been approved by an authorized agency, then a maximum indirect rate of 20% based on actual costs will be allowed on this grant.

For the purpose of this program, general and administrative (G&A) is included as an indirect cost. **Organizations claiming an indirect rate must submit a budget narrative that is attached to Form D (Proposed Budget) that explains how the indirect cost was calculated along with supporting documentation.** Failure to provide supporting documentation will result in disallowance of indirect costs.

Organizations that do not claim an indirect rate and individuals may charge as a direct expense the incremental cost of obtaining the insurance coverage specified in Article XII of the Model Grant Agreement. Applicants that propose to cost share some of the project expenses must also cost share any indirect associated with the cost shared amount.

Part 4 GRANT AWARD AGREEMENT

A. Grant Agreement

Once a grant is approved for funding by the Commission, the EISG Program Administrator will send an award notification letter to the applicant containing the following: (a) a list of any outstanding issues that need to be resolved prior to executing the agreement; (b) request for name and address of the individual

with signature authority, (c) request for insurance certificates, and (d) guidelines for obtaining vendor bids on project equipment, if applicable. The agreement will be mailed under separate cover once all outstanding issues have been resolved and incorporated into the agreement. The agreement must be signed by both parties before work expenses can be reimbursed.

Any requests for modifications, changes, additions, or deletions from the terms and conditions in the Model Grant Agreement must be included as part of the grant application and require written approval from the Program Administrator prior to being incorporated into the final agreement. Grant applicants are required to certify on Form B of the application that they have reviewed the standard terms and conditions contained in the Model Grant Agreement that is available for viewing and downloading from the EISG Solicitation web page. Requests for significant modifications to the grant contract may be grounds for application rejection. The grant agreement will incorporate by reference the grant application manual, the proposal and any addenda to the application (including correspondence to or from the Program Administrator that specify modifications or restrictions). Failure to agree to the terms, conditions and requirements of the grant agreement would be grounds for withdrawing the award.

B. Grant Performance

1. Reimbursement Invoices

EISG grant funds are distributed only for reimbursement of project expenses. Invoices for reimbursement should be submitted on a regular basis to the EISG Program Administrator for periods not less than one month and not greater than every three months. Invoices must be delivered within 30 days of the end of the invoice period. Advances on grant funds will not be allowed. Reimbursement invoices submitted to the Program Administrator will be paid within 30 days of receipt, unless contested. The Program Administrator retains the right to withhold payment for the following reasons: (a) progress reports are not current; (b) the progress reports contain insufficient detail to assess Awardee's progress or (c) there is evidence of lack of performance.

2. Deliverables

Awardee must submit all deliverables to the EISG Program Administrator as specified in Form C and the grant agreement. The minimum required deliverables include:

(a) Progress Reports: A progress report is required for every three-month interval starting from the start date on the grant agreement and is required for the duration of the agreement. Progress reports must be delivered within 30 days of the end of each reporting period or will be considered late.

(b) Final Report: A draft report is submitted first for review and comments (in the format specified in Exhibit D of the model grant agreement). The EISG Program Administrator will review the report and provide written comments and recommendations. After making the recommended changes the final report is delivered.

3. Tax and Legal Issues

If in doubt, Awardees should consult with legal and tax advisors (at the Awardee's expense) to fully understand the legal and tax obligations incurred when entering into a grant contract.

California Energy Commission Energy Innovations Small Grant (EISG) Program **GRANT APPLICATION COVER PAGE** **Natural Gas Program**	**FORM A**

a. Project Title: _____
(not to exceed 10 words)

b. Project Subject Area: (*Indicate the one that most applies)*

- ☐ Natural Gas Energy Efficiency
- ☐ Natural Gas Enviornmental Impacts
- ☐ Renewable Energy Technologies
- ☐ Advanced Generation Technologies
- ☐ Strategic Analysis
- ☐ Transportation Energy

c. Applicant Category:

- ☐ Individual
- ☐ Business
- ☐ Academic Institution
- ☐ Non-Profit

d. Grant Funding Requested: $_____ ☐ Hardware $95K ☐ Modeling $50K

e. Proposed Project Duration: _____ *(Maximum duration 12 months)*

f. Principal Investigator/Project Manager: *(serves as single point of contact for all communications)*

Name:	Address:
Phone: Fax:	
Email:	
Organization:	
Position/Title:	

g. Proprietary/Confidential Information:

- ☐ NO – Proposal does not contain proprietary information, unrestricted distribution authorized.
- ☐ YES - Proposal contains proprietary information, restrict distribution and disclosure.

h. Application Status *(include only prior submissions on same concept)*

☐ First Submission ☐ Second Submission ☐ Third Submission

Provide the proposal number(s) assigned to prior submission(s):_____

i. Indicate the Solicitation Number Listed on the Solicitation Notice: _____

j. Indicate the Solicitation Number Printed on the Application Manual Used: _____
(the solicitation numbers listed in items i and j must match)

k. Principal Investigator/Project Manager Certification: To the best of my knowledge, I certify that the information contained in this grant application package is true, and discloses all requested information.

Principal Investigator/Project Manager Signature:_____ **Date**:_____

Reserved for EISG Program Administrator Use		
Solicitation	Date Received	Proposal Number Assigned
11-02G		

FORM A
INSTRUCTIONS

Grant Application Cover Page

Item a: Project Title
Provide a title for the project that is descriptive of the proposed work. The title must communicate the type of work being proposed. Avoid trademarked names and acronyms that are not well understood by the general public. **The title shall not exceed 10 words.**

Item b: Project Subject Area
Check the one box that corresponds to the PIER Natural Gas R&D Area that is most representative of the proposed work. *To check a box in MS Word double click on the check box and select "checked" in the menu that appears*.

Item c: Applicant Category
Check the one box that represents the category you are applying for a grant under. The applicant categories are defined in Part I of this manual. The category marked in Item c must match the information certified on Form B.

Item d: Grant Funds Requested
Specify the amount of grant funds requested for use by the Awardee. This amount must match the amount shown on Form D, line 6, column "EISG Funds Requested" and cannot exceed $95,000 for hardware projects or $50,000 for modeling projects.

Item e: Proposed Project Duration
Specify how many months you need to complete the project. The project's duration cannot exceed 12 months. Include the time it takes to complete the final report after all data collection and analysis functions have been performed.

Item f: Principal Investigator/Project Manager
In most cases the PI also serves as the Project Manager. If this is not the case then list the Project Manager in item f and identify the PI on Form E (Project Personnel).

Item g: Proprietary/Confidential Information
Indicate if the proposal contains any proprietary information that requires protection. Clearly mark and label those sections that are proprietary on **all copies.**

Item h: Application Status
Indicate if this is your 1st, 2nd or 3rd submission of the same or similar energy concept. If this is a second or third submission, provide the proposal number(s) that were assigned in the earlier solicitations (proposal number was annotated on postcard and status letter notifications). Failure to identify prior submissions and provide a resubmission summary is grounds for failing initial screening.

Items i and j: Solicitation Number
The solicitation number listed on the solicitation notice that you are responding to must match the solicitation number printed on the cover of the Grant Application Manual used to fill out the application.

Item k: PI/PM Certification: Signature and date of Principal Investigator/Project Manager.

California Energy Commission Energy Innovations Small Grant (EISG) Program **CERTIFICATIONS & DISCLOSURES**	**FORM B**

a. APPLICANT ELIGIBILITY CERTIFICATION

☐ **Individual** Must be acting independently. If employed or affiliated with an organization, applicant has authorization from the organization to pursue grant research exclusively as an individual with no rights reserved to the organization. The individual, not the organization, retains all intellectual property rights accrued from the grant project. *(if employed or affiliated with an organization or business, specify in the space below any financial interest the organization or business has in the proposed project)*

☐ **Business**

☐ **Non-Profit Organization** Possess IRS tax exemption. Non-profit organizations that are already under contract to the Energy Commission to perform PIER related work outside of the EISG Program are prohibited from applying to the EISG Program.

☐ **Academic Institution** Public or private postsecondary institutions.

Item (a) Information:

b. FINANCIAL AND LEGAL CERTIFICATIONS

☐ Checking this box certifies that the Principal Investigator and any team members, organization or business participating in this proposal have reviewed the terms and conditions contained in the model agreement. If there are any terms or conditions that you cannot agree to, then you must submit with the application a written request for changes to the standard terms and conditions.

☐ Checking this box certifies that the Principal Investigator/Project Manager and any organization /business participating in this proposal, have not declared bankruptcy in the last seven years.

☐ Checking this box certifies that the grant applicant acknowledges that all costs associated with proposal preparation are borne by the applicant and that receipt of a proposal by the EISG Program Administrator does not constitute a contractual relationship with the grant applicant.

c. MULTIPLE AWARDS FOR THE SAME OR SIMILAR RESEARCH

☐ By checking this box the applicant certifies they have been informed they are prohibited from seeking or obtaining reimbursement from more than one funding source for the same work.

☐ By checking this box the applicant acknowledges they must disclose in Form F, item 16, any past or current funding received from any State or Federal agencies (such as PIER, SBIR, DOE) for work that is similar or related to the research proposed in this grant application. The applicant's performance on previous related research will be a factor in evaluating this application.

☐ By checking this box the applicant certifies that, in the event they receive an EISG grant, they agree to notify the EISG Program Administrator if they enter into a concurrent contract that requires the same, similar or related research as proposed in this application, and in this event further certify they will limit reimbursement from the EISG Program to costs that are not covered by other awards.

d. CONCEPT ORIGINALITY

☐ Checking this box certifies that the grant applicant has already performed a thorough search of the existing published literature and patents and determined that the proposed concept is original.

FORM B

INSTRUCTIONS

Certifications & Disclosures

Item a: Applicant Eligibility Certification

You must check one of the four boxes to indicate the applicant eligibility criteria under which you are applying. Even if you qualify under more than one criteria (i.e., sole proprietor vs. individual), indicate the **one** that best fits your situation. Different categories have different restrictions (i.e. ability to invoice indirect expenses and ownership of intellectual property) to which the applicant will be held. Provide the additional information requested (SIC codes, number employees, gross revenues etc.) in the space provided. Fraudulent misrepresentation of eligibility is grounds for immediate termination of award.

Item b: Financial and Legal Certifications

If all three certifications are not checked you must indicate on a separate page the reason you cannot provide the certification and attach it to Form B. Not being able to provide the first two certifications (agree to all terms and conditions in model agreement and no bankruptcy in last 7 years) does not result in automatic disqualification. Proposed modifications to the terms and conditions will be considered within narrow limits as well as information that indicates proven financial responsibility since bankruptcy (references on other contractual work successfully completed). Any proposed modifications to the agreement's terms and conditions must be submitted with the grant application for review and requires written approval from the Program Administrator. The model grant agreement is available for viewing and downloading from the EISG solicitation web page http://www.energy.ca.gov/contracts/smallgrant/index.html. The third certification regarding proposal preparation costs and contractual relationship is not negotiable and must be certified in order to qualify.

Item c: Multiple Awards for Same or Similar Research

The first certification check box provides notice that applicants are prohibited from seeking reimbursement from more than one funding source for the same work, and the applicant must so certify in order to qualify for funding consideration.

The second check box requires the applicant to acknowledge the requirement to disclose to the EISG Program Administrator if they received funding for research that is similar or related to the research proposed. The applicant's performance on previous research will be a factor in evaluating the application. Failure to disclose the information is cause for denial or revocation of funding.

The third check box requires the applicant to acknowledge that if they become a recipient of a grant award from the EISG Program, they must notify the EISG Program Administrator if they enter into a concurrent contract that requires the same, similar or related research as proposed in this application, and will be reimbursed only for costs that are not covered by the other awards.

Item d: Certification of Concept Originality

This certification is to ensure the grant applicant has performed a reasonable search of the published literature and patents to determine that the proposed concept is original. University and public libraries can assist in performing searches of relevant research databases of journals and trade publications. Some databases, such as the one maintained by the U.S. Patent Office (www.uspto.gov) can be researched on-line through the Internet. The EISG program page on the web provides a link titled "Applicant Internet Resources" that provides links to Internet sites related to energy technologies.

Results of the search should be summarized in the State-of-the-Art section of the Narrative. Failure to convey a thorough understanding of the current State-of-the-Art in the area proposed can cause the proposal to fail initial screening or score poorly in technical review.

Note: The EISG Office is in the process of expanding its list of web resources that would be of value to the typical grant applicant and would welcome any suggested sites. Send your suggestions via email to the EISG Program Administrator.

California Energy Commission Energy Innovations Small Grant (EISG) Natural Gas Program **PROJECT SCHEDULE / DELIVERABLES**	**FORM C**

SCHEDULE / MILESTONE CHART

TASKS AND MILESTONES	MONTHS AFTER AWARD											
	1	2	3	4	5	6	7	8	9	10	11	12
Progress Reports *(minimum requirement annotated)*			X			X			X			
Draft Final Report *(indicate when it will be delivered)*											X	
Final Report *(indicate when delivered –assume 4 wk review of draft)*												X

List all primary tasks, subtasks and milestones in the order of accomplishment to include Progress Reports and Final Report.
Block out timeframe allocated for completion of each task.

CONTRACT DELIVERABLES CHART

DELIVERABLES	MAA*	DESCRIPTION
1. Progress Reports (required)	**	In accordance with Exhibit C in model grant agreement.
2. Final Report (required)		In accordance with Exhibit D in model grant agreement.
3.		
4.		

** MAA = Months After Award*
*** Since more than one progress report will be delivered, use the schedule to indicate when they will be delivered.*

FORM C
INSTRUCTIONS

Project Schedule/Milestone Chart

Schedule

Use the first line of the schedule to show when the progress reports will be submitted. The maximum allowed reporting interval is three months followed by a 7 day period in which the report must delivered after which it will be considered in default. For example, if you have a 12-month project and plan on 3-month reporting intervals you would show in line one of the schedule progress reports being submitted in months 3, 6, and 9.

- List the major tasks, subtasks and milestones in the order in which they occur (this should be consistent with the Statement of Work.
- Block out the timeframe allocated for each task using multiple XXXs or shading.
- Use a single X or * to represent milestones such as decision points and deliverables.
- Use the last line of the schedule to show when the Final Report will be submitted. The Final Report must be submitted within the term of the grant agreement. Build into the schedule a 4-week period for the EISG Program Administrator to review a draft of the Final Report prior to formal submission. PI needs to allocate sufficient time within the requested project term to write the Final Report.

Deliverables

- Progress reports are a required deliverable and must be projected on line 1 of the schedule.
- The Draft Final Report and Final Report are required deliverables and must be projected on the schedule.
- Other deliverables may include prototypes, software modules, or general use equipment that you plan to purchase with grant funds. General use equipment is generally not authorized for purchase unless purchasing is more cost effective than renting or leasing. Prototypes that have concept demonstration value and are of reasonable size and weight (can be mailed through postal system) should be annotated for inspection and return.

California Energy Commission
Energy Innovations Small Grant (EISG) Natural Gas Program
PROPOSED BUDGET SUMMARY

FORM D

PROJECT TITLE:

1. PERSONNEL SALARIES/WAGES (list last name and job title)	Total Hours	Hourly Rate	Total Wages (Hrs x rate)	EISG Funds Requested	Applicant Contributions	Other Contributions
Total Salaries/Wages:						
Total Fringe Benefits:						
Subtotal Section 1 "Salaries/Wages and Fringe Benefits":						

2. CONSULTANT/CONTRACTUAL SERVICES (*itemize contracted services)*

Subtotal Section 2 "Consultant/Contractual Services":			

3. OTHER DIRECT EXPENSES (see instructions**)**

a. Travel (combine all travel expenses on this line)				
b. Facilities Lease/modification Expenses				
c. Equipment Rental/Use Fees				
d. Major Equipment Purchases (for items costing over $5,000)				
e. Materials/Supplies/Equipment/Misc. (total lines e1.– e.8.)				
(1) Total for material items with unit cost less than $100				
(2)				
(3)				
(4)				
(5)				
(6)				
(7)				
(8)				
Subtotal Section 3 "Other Direct Expenses":				
4. TOTAL DIRECT COSTS (1 - 3)				
5. INDIRECT COSTS (see instructions)				
6. TOTAL PROPOSAL COSTS (4 + 5)				

FORM D
INSTRUCTIONS

Proposed Budget Summary

General Information:

- Reference Part 3.I. and 3.J. of the manual for general guidelines on allowable direct expenses.
- This form is available as a separate Excel file on the EISG Solicitation web page (http://www.energy.ca.gov/contracts/smallgrant/index.html) with the math formulas inserted.
- The proposed budget form provides columns that allow the applicant to show the project funds coming from three sources (a) grant funds, (b) applicant's contribution (i.e., cash, in kind contribution or waived indirect) and (c) any other third party sources from which the applicant has received a financial commitment.
- Attach a budget narrative to this form if budget entries are made in sections 2, 3.a – 3.d., or 5.

1. **Personnel Salaries/Wages:**
   - List the last name and functional job title for each team member.
   - Academic personnel must convert their % time and salaries to total hours and hourly rate on the proposed budget but if awarded are allowed to invoice based on % effort.
   - Fringe benefits may be added as long as they are not already included in the listed hourly rate or included in the indirect costs. Individual applicants cannot claim fringe.

2. **Consultant/Contractual Services**
   - There are no restrictions on whom an applicant can subcontract with or how much work may be subcontracted out provided the subs provide a cost estimate letter and satisfy the applicable clauses in the grant agreement.

3. **Other Direct Expenses (related to Awardee grant work)**
   - For travel, facilities lease, equipment rental and major equipment purchase enter a single total amount for each line on Form D and provide an itemized breakdown in the budget narrative.
   - The materials/supplies/equipment/misc. line includes all remaining expenses. Total all material expenses with a unit cost less than $100 and enter on line 3.e.(1). Itemize the remaining expenses that have a unit cost greater than $100 on lines 3.e.(2) – 3.e.(8). **Total lines 3.e.(1) – 3.e.(8) on line 3.e.**
   - If you are an organization that is not claiming an indirect rate or are an individual you may itemize the added cost of obtaining the insurance coverage mandated in Article XII of the Model Grant Agreement as a direct expense under the materials line (3.e.).

4. **Total Direct Costs** *(Total subtotals from items 1-3)*

5. **Indirect Costs**
   - Not applicable for Individuals.
   - Businesses, non-profits and academic institutions that choose to recover indirect costs must use an established rate based on the priority specified in Part 3.K. of the application manual.
   - For the purpose of this program, G&A is considered an indirect cost.
   - If cost sharing is proposed you must also cost share the associated indirect.

6. **Total Proposal Costs**
   - First column total represents the requested amount for Awardee grant work and cannot exceed $95,000 for hardware projects or $50,000 for modeling projects. **The two categories may not be combined.**

Note: Bold blocks represent budget amounts tracked for accounting purposes if the grant is awarded.

California Energy Commission Energy Innovations Small Grant (EISG) Program **PROJECT PERSONNEL**	**FORM E**

- Provide a brief summary of qualifications for each member of the project team for which a resume is not provided (resume required for Principal Investigator/Project Manager).
- Describe what contribution each team member will make to the proposed project.

1) Principal Investigator/Project Manager Name: _____

2) Investigator/Team Member Name: _____ Position: _____

3) Investigator/Team Member Name: _____ Position: _____

4) Investigator/Team Member Name: _____ Position: _____

***** *If more than four investigators, use additional pages and attach to this form*

FORM E
INSTRUCTIONS

Project Personnel

General Information

- If there are more investigators than the form can accommodate, use additional pages and attach to the form.

- The Principal Investigator/Project Manager must provide a resume (2-page maximum), which will be used to assess their qualifications (e.g., education, experience, relevant publications, etc.). If the positions of Principal Investigator and Project Manager are being performed by separate individuals then resumes will be required for both positions. Resumes on additional team members are optional but desired. Attach all resumes to this form.

Item 1: Specify the name of the Principal Investigator followed by a summary of the primary tasks to be performed by the PI and the percentage of time that will be devoted to the project.

Items 2 – 4:
Provide the name and position title of each team member/investigator that will be assisting the PI in the performance of the project. Provide a summary of qualifications for each investigator for which a resume is not provided and indicate the primary tasks they will be responsible for and the percentage of time they will devote to the project.

California Energy Commission Energy Innovations Small Grant (EISG) Program **STATUS Of RESEARCH EFFORT**	**FORM F**

Answer each question below and provide brief comments where appropriate to clarify status. If you are filling out this form in MS Word the comment block will expand to accommodate inserted text. The completed form should not exceed **two pages**. Responses on this form will not be used as the sole justification for the Initial Screening decision.

Activity	Comments:
1) Have you surveyed projected end users for interest in using your concept?	*If YES, who and what were the survey results?*
2) Have you done a market analysis (takes into account external factors that influence demand)?	*If YES, summarize the results.*
3) Have you defined a path leading from concept research to ultimate end use?	*If YES, list the main steps in the plan.*
4) Have you developed a business plan for marketing the proposed technology?	*If YES, what level of detail (low, medium, high)?*
5) Have you assessed the competition in terms of cost, function, maintenance, etc., for the user?	*If YES, include a comparison table in the proposal.*
6) Have you developed a conceptual design and identified performance specifications?	*If NO, how would the technical merit be assessed?*
7) What level of **technical** risk is associated with this development effort?	*Risk level: (low, medium, high).*
8) Have you identified the intellectual property that may be developed in the proposed research?	*If YES, indicate how you intend to protect your IP.*
9) Have you already determined that your concept does not infringe on related patented technology?	*Indicate YES or NO.*
10) Have you filed for or obtained a patent for the concept?	*If YES, provide filing # if filed or patent #.*
11) Has industry or a commercializer expressed interest in the proposed research?	*If YES, in what form is that interest expressed?*
12) Have you identified the possible environmental or safety risks associated with this technology?	*If YES, identify the risks.*
13) Have you identified any regulatory, institutional, and legal obstacles to your product?	*If YES, identify them.*
14) Do you intend to develop this technology through to commercialization?	*If YES, how many years to commercialization?*
15) Have you quantified the potential public benefit to California with regard to energy savings, environmental impact etc.?	*If NO, why should CA fund this research?*
16) Have you received funding in the past or currently from State or Federal agencies (SBIR, DOE, a state agency, etc.) to develop this technology?	*If YES, briefly describe and provide contact information for the project managers at the public agencies.*

California Energy Commission Energy Innovations Small Grant (EISG) Program **RECOMMENDED REVIEWERS**	**FORM G**

The grant applicant has the option to recommend technical reviewers that they would like the EISG Program Administrator to consider when deciding which technical reviewers to use for evaluating their proposal. The Program Administrator retains final decision authority on selecting reviewers.

First Recommendation

Name:	Address:
Phone: Fax:	
Email:	
Organization:	
Position/Title:	

Indicate why you consider this individual qualified in the subject area proposed.

Second Recommendation

Name:	Address:
Phone: Fax:	
Email:	
Organization:	
Position/Title:	

Indicate why you consider this individual qualified in the subject area proposed.

Third Recommendation

Name:	Address:
Phone: Fax:	
Email:	
Organization:	
Position/Title:	

Indicate why you consider this individual qualified in the subject area proposed.

FORM G
INSTRUCTIONS

Recommended Reviewers

General Information:

- This form is optional.

- The intent of this form is to assist the Program Administrator in identifying potential qualified technical reviewers for proposals. Of particular interest are individuals that possess expertise in very narrow and specialized areas of technology that the typical technical reviewer of energy research may not be familiar with.

- Do not recommend individuals that would have a conflict of interest in reviewing your proposal or would even give the appearance of conflict of interest or bias.

- The EISG Program Administrator retains the final authority to select the technical reviewers.

California Energy Commission Energy Innovations Small Grant (EISG) Program **Recommended Reviewer Disqualification**	**FORM H**

The grant applicant has the option to recommend that specific individuals or organizations not be used as technical reviewers. You cannot disqualify Federal Labs or Universities that have known expertise in the area proposed. If this is a resubmitted proposal you can identify reviewers we used to evaluate your prior submission by providing the proposal number assigned to the proposal and the designation TR1-TR5 that was noted on the technical evaluation form. Applicant must provide justification for disqualification. The Program Administrator retains final decision authority on selecting reviewers.

First Recommendation

Name:	Address:
Phone: Fax:	
Email:	
Organization:	
Position/Title:	

Indicate why you believe this individual/organization should not serve as a technical reviewer.

Second Recommendation

Name:	Address:
Phone: Fax:	
Email:	
Organization:	
Position/Title:	

Indicate why you believe this individual/organization should not serve as a technical reviewer.

Third Recommendation

Name:	Address:
Phone: Fax:	
Email:	
Organization:	
Position/Title:	

Indicate why you believe this individual/organization should not serve as a technical reviewer.

SAMPLE NON-DISCLOSURE FORM USED BY EISG PROGRAM

It is the responsibility of the EISG Program Administrator to safeguard all confidential/ proprietary information contained in documents submitted to the EISG Program. To fulfill this responsibility, the Program Administrator requires all personnel who process, screen, and review EISG Program documents (pre-proposals, proposals, final reports) that contain confidential information, to complete a non-disclosure agreement with the Program Administrator.

By signing this agreement the Program Administrator (hereafter referred to as the PA) and the program support personnel granted access (hereafter referred to as the RECIPIENT) agree to abide by the following terms and conditions.

1. PA's Obligation: The PA agrees to clearly identify those documents containing confidential/proprietary information and to identify those sections within the documents that are considered confidential/proprietary by the grant applicant which may include any or all of the following: data, materials, designs, concepts, processes, samples, specifications and financial or business information.

2. RECIPIENT' Obligations: RECIPIENT agrees to take all such precautions as may be reasonably necessary to prevent the disclosure of all confidential/proprietary information contained in EISG Program documents. In addition, the RECIPIENT agrees to the following:
   (a) Shall not make or retain copies of confidential information contained in EISG Program documents (excluding the EISG Program Administrator).
   (b) Shall not disclose confidential information to any third party unless the disclosure is necessary in the performance of their EISG Program responsibilities, in which case, the new RECIPIENT granted access must also sign a non-disclosure agreement.
   (c) Shall not use the confidential information for personal benefit.

3. Limitation on Obligations: The obligations specified in section 2 above do not apply to information that meets the following conditions:
   (a) Information already known or independently developed by the RECIPIENT (in documented form) prior to this disclosure by the PA.
   (b) Information previously published or in the public domain.
   (c) Information that becomes public knowledge or is legally disclosed by third parties after this agreement is executed.

4. The term of this agreement shall be five (5) years from the date of access to any EISG Program document containing confidential/proprietary information.

5. This agreement shall be governed and construed in accordance with the laws of the State of California.

AGREED AND ACCEPTED BY

RECIPIENT		**EISG PROGRAM ADMINISTRATOR**
Signature & Date:		*Signature& Date:*
Printed Name:		*Printed Name*:
Address:		*Address*: SDSU Foundation EISG Program Administrator 5250 Campanile Dr., MC 1858 San Diego, CA 92182-1858
Document Covered By This Agreement:	***EISG Proposal***	*Recipient Certification* ☐ *I Certify that the proposal was shredded or burned on my end.* ☐ *I Certify that the proposal was mailed back to PA for destruction.*

SAMPLE

Exhibit 1

PREFERENCE POINTS FOR CALIFORNIA-BASED ENTITIES

An Applicant must meet all of the following to receive CBE preference points:

Pursuant to Public Resources Code Section 25620.5 (h) and (i), the California Energy Commission's Energy Innovations Small Grant (EISG) Program must give a priority to CBEs when making awards. A California-Based Entity (CBE) is a corporation or other business entity organized for the transaction of business that:

- Has its headquarters or an office in California; and
- Substantially manufactures the product or substantially performs the research within California that is the subject of the award.

The proposal budget must allocate **at least 80%** of EISG funds to one or more CBEs. If the CBE is the recipient, the proposal budget must provide evidence that the CBE will spend at least 80% of funds in California. If the recipient is not a CBE, the proposal budget must provide evidence that it will subcontract at least 80% of EISG funds to a CBE and that the CBE will spend the funds in California.

- The 80% applies only to EISG funds and does not include the Applicant's matching funds. For example, if a proposal has an EISG budget of $100,000 (regardless of how matching funds are pledged), the budget must show that $80,000 of EISG funds are allocated to CBEs.
- Multiple CBEs may be used to meet the 80% requirement. For example, the 80% requirement is met if the recipient CBE receives 41% of EISG funds and the subcontractor CBE receives 39% of EISG funds. No more than 20% of EISG funds can be subcontracted to non-CBEs.
- No more than 20% of EISG funds may be subcontracted to non-CBEs.

The proposal must document the expenditure of EISG funds in California in the proposed budget in Form D.

The proposal must receive a Technical Review score of 26.0 or higher prior to any preference points being added. The preference points will be added to the PTRB final score.

The preference points will be awarded as follows:

PTRB Score (prior to preference points being added)

Additional Points

80% or more of EISG funds spent in California = 24 points

The total possible points, not counting any preference points, for this solicitation is 100.

Exhibit 2

PI/Project Manager Name:

Project Title:

CALIFORNIA-BASED ENTITY (CBE) FORM

Please answer all questions below for each CBE. Failure to provide accurate, detailed, and complete information may result in entities not being counted as CBEs. (Examples are provided in gray.)

1. State the full legal name of the CBE and its business form (e.g., corporation, limited liability company, sole proprietorship).

Smith Onions, LLC

2. Indicate whether the CBE is the prime contractor/recipient or a subcontractor.

The CBE is the subcontractor.

3. Indicate whether the CBE has its headquarters or an office for the transaction of business in California. Please indicate the street address.

Smith Onions is headquartered in California.
Smith Onions
1222 Atlantic Ave
Oxnard, CA 93030

4. Provide a brief description of the product or research that is the subject of the proposal.

This project will demonstrate the effectiveness of a commercially available membrane filtration system to clean and reuse wastewater produced from the Smith Onions onion processing plant for supplying evaporative cooling towers used in the plant.

5. List the location(s) in California where the product will be manufactured or the research will occur and provide a brief description of the facility at the location (for multiple locations, please describe what portion will be completed at each location).

The demonstration project will occur at Smith Onions onion processing plant, with approximately 50,000 sq ft of refrigerated processing and warehousing space, 1222 Atlantic Ave., Oxnard, CA.

6. Indicate whether any part of the research or product manufacturing will occur outside of California. If so, please explain what portion and how a substantial portion will occur in California.

No research will be performed outside of California.

7. Indicate the entity's Tax ID number.

Example: 99-9999999

8. Indicate that the entity is registered with the California Secretary of State.

California business entities as well as non-California business entities conducting intrastate business in California are required to register and be in good standing with the California Secretary of State in order to enter into a funding agreement with the Energy Commission. If not currently registered with the California Secretary of State, Applicants are encouraged to contact the Secretary of State's Office as soon as possible. For more information, visit the California Secretary of State's website at www.sos.ca.gov.

Entities who are acting as the Prime must provide evidence of registration with the California Secretary of State as part of the submission. The evidence can be a statement indicating that the company is searchable at the Secretary of State website under Business Entities.

CBEs who are acting as subcontractors may provide evidence in that they are applying for registration, as long as evidence of completed registration with the California Secretary of State is provided before proposal evaluation is completed.