IEC 61850: Applicability to DER

Prepared for California Smart Inverter Working Group

Overview

- IEC 61850 is already in use with DER devices worldwide
- How IEC 61850 "works"
- Demo

© Copyright 2014 SISCO, Inc.

IEC 61850 already used in US/California for Wind Power

Multiple companies with global integration problems, picking IEC 61850/IEC 61400-25-2 to be the basis of the business solution.

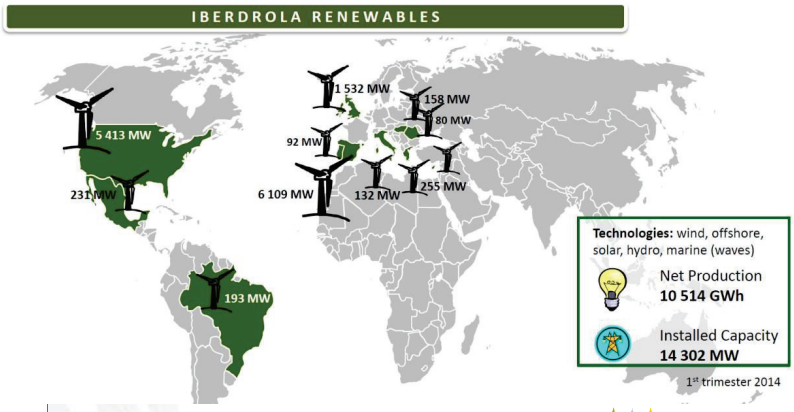

EC&R currently operates a geographically balanced portfolio of more than 4.2 GW renewables capacity in Europe and North America

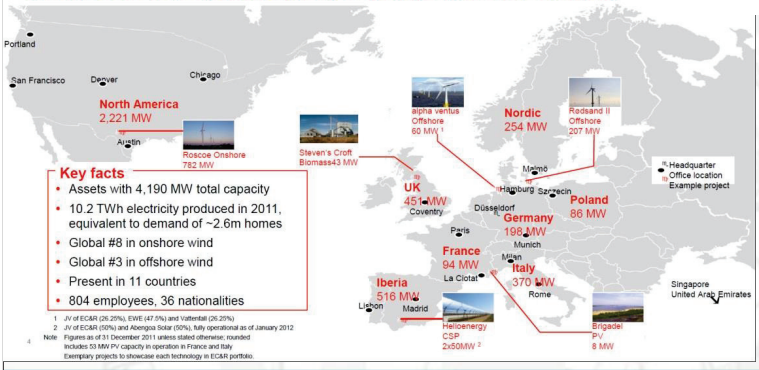

E.on, Enexco, Iberdrola, EDF Renewables integrate Wind Turbines using IEC 61850. Have been able to integrate 100+ turbines with OSIsoft and SCADA master in less than 3 days.

© Copyright 2014 SISCO, Inc.

CHP Penetration

CHPCOM project

Combined Heat and Power Communication

Secure IEC 61850 Based Data Communication in a Danish Power System Context

Carsten Strunge
IEC 61850 Europe 2014

- CHPCOM is a demonstration project funded by the Danish ForskEL
- Partners involve:
  - 7 x CHP
  - 3 x DSO
  - 3 x BRP
  - 1 x TSO
- Period 2013-2015
- Budget ~2 million euro

© Copyright 2014 SISCO, Inc.

CHPCOM overview diagram

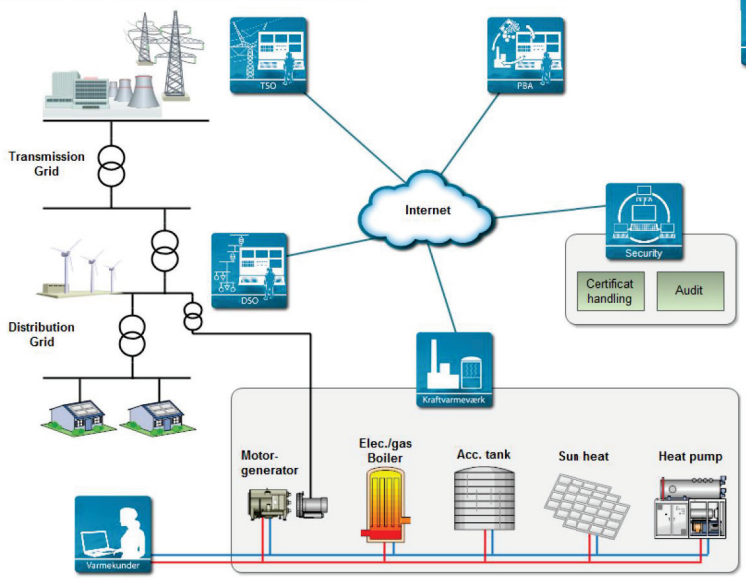

Project addresses RBAC and PKI on a national level through the use of standards.

Coordination with parallel activities

- IEC TC57 standardization on IEC 61850 and IEC 62351
- ITU-T SG17 standardization on X.509 PKI for Smart Grid
- National grid code requirements for information exchange
- Analysis of possible Danish implementation of "Supply-PKI"
- Input to national power system information security strategy
- Other DER R&D projects in DK and EU

© Copyright 2014 SISCO, Inc.

IEC 61850 is Function Based

We think an inverter is:

IEC 61850-7-420 Definition of an Inverter

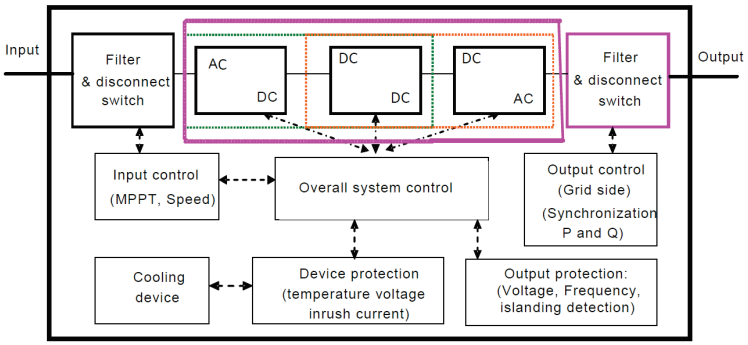

- Rectifier Function
- Inverter Function
- Nameplate Information
- AC and DC Measurements
- Cooling Functions
- ECP or PCC

Functional requirement from SIWG, functions already available, but not considered a Inverter.

© Copyright 2014 SISCO, Inc.

An IEC 61850 Function is a Logical Node

IEC Functions + SIWG

- Rectifier Function (ZRCT)
- Inverter Function (ZINV)
- Nameplate Information (DRAT)
- AC and DC Measurements (MMXUs ,MMDC)
- Cooling Functions (CCGR)
- ECP or PCC (DOPA, DOPR, DPST)

SIWG Current Specification

- Inverter Function (ZINV)
- Nameplate Information (DRAT)
- AC Measurement (MMXU, MMTR)
- ECP or PCC (DOPA, DOPR, DPST)

Containers of functions are known as Logical Devices

The names of Logical devices are assigned by the user and must be unique within the scope of the "system"

© Copyright 2014 SISCO, Inc.

Uniqueness Allows Proxies/Gateways/Aggregation

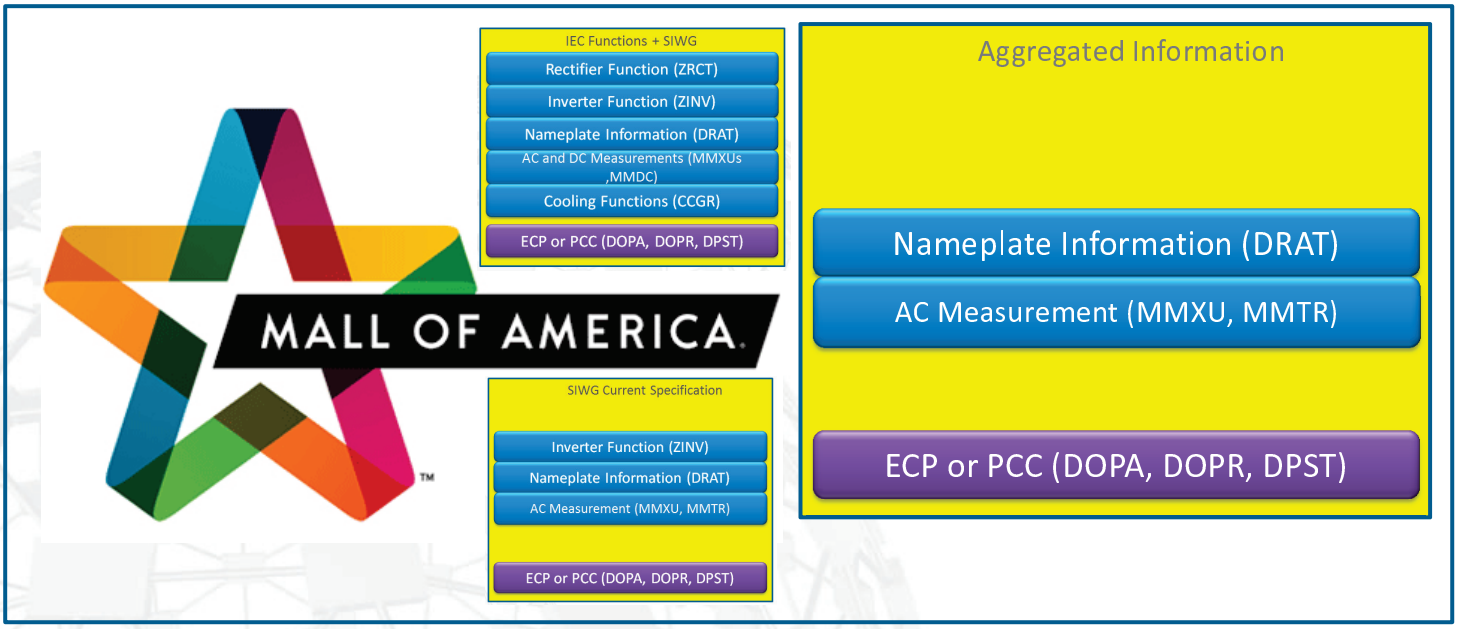

A campus (e.g. Mall of America) could have multiple inverters.

Also aggregates information, exposed at different points of connections.

© Copyright 2014 SISCO, Inc.

Customers need to know/specify what they need

- IEC 61850 provides this capability through the use of the System Configuration Language (SCL)
  - » Specifies how many of what functions are needed
  - » Specifies what Data is required
  - » Specifies what communication services are required*
  - » Allows vendors to provide an IED Capability Description file for approval in regards to the functionality so user can make sure it meets the user requirements (data and services).

© Copyright 2014 SISCO, Inc.

IEC 61850 Simplified

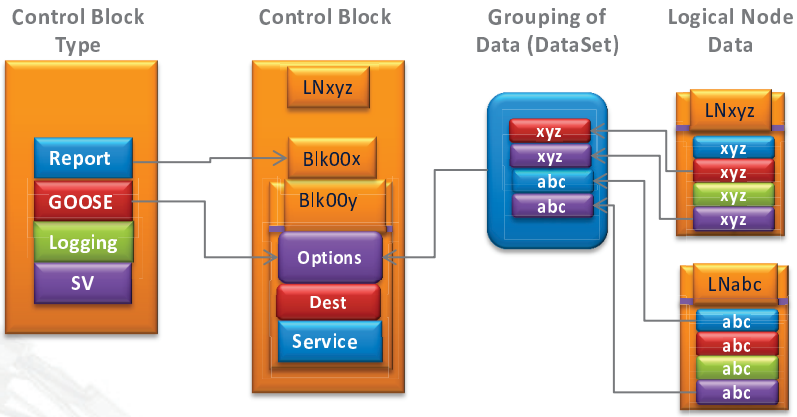

Service	Intended Use	Triggers
Get and Set Data	Read and writing of data, setpoints, etc.	
Controls	Commanded SCADA action	Direct Operate, Select Before Operate, etc.
Settings Groups	Allows pre-configured settings to be applied as a single group with a single control.	
Reporting	Point to Point delivery of SCADA interval type of data.	Data Change; Quality Change; Data Update; Integrity; and Commanded
GOOSE	Point to Multipoint for automation	State Change
Logging	Sequence of Event recording to allow multiple clients to Query contents.	Similar to Reporting
Sampled Values	Point to Multipoint stream based updates for CT/PT sharing or Synchrophasor applications.	Periodic sampling rate causes trigger.

Logical Nodes/Functions have Information

ZINV class		
WRtg	ASG	Maximum power rating
VarRtg	ASG	Maximum var rating: var

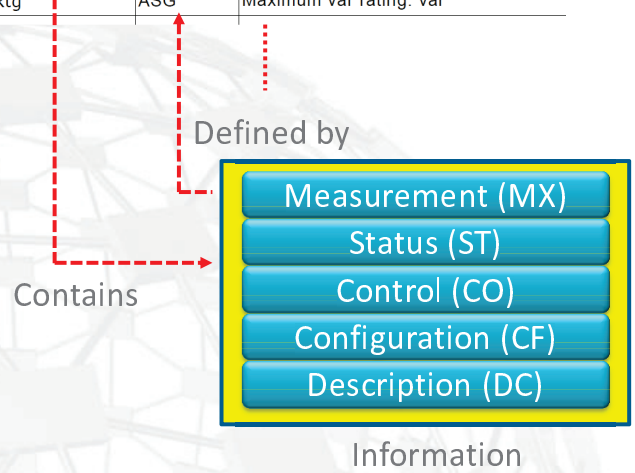

© Copyright 2014 SISCO, Inc.

Demo Overview

Simulated Proxy/Aggregation

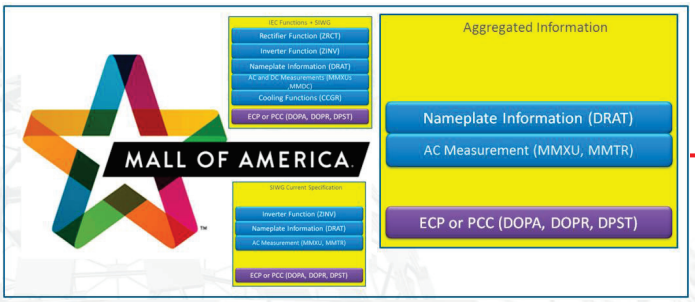

Ease of Configuration Demonstration

- Auto-discovery
- Off-line configuration through use of SCL

GE Protection Relay

Reporting Service Demonstration

© Copyright 2014 SISCO, Inc.

Demo

© Copyright 2014 SISCO, Inc.

Summary

- IEC 61850 is already in use for DER around the world and in the US
- Is based in functionality, not what a physical device is called
- Provides the ability to specify the functionality that a user needs
- Provides ease of configuration

Herbert Falk
Solutions Architect and IEC 61850 Editor
email: herb@sisconet.com

© Copyright 2014 SISCO, Inc.