E2I EPRI Assessment

Offshore Wave Energy Conversion Devices

Report: E2I EPRI WP – 004 – US – Rev 1
Principal Investigator: Mirko Previsic
Contributors: Roger Bedard and George Hagerman
Date: June 16, 2004

Table of Contents

Introduction 3
Assessment Criteria 5
Initial Screening of Companies 6
Data Sources and Methodologies 7
1,500 MWh Pilot Plant and 300,000 MWh Commercial Plant Rough Sizing 7
Cost Estimates 9
Result Summary 9
Appendix A - AquaEnergy 11
Appendix B - Energetech 17
Appendix C – Independent Natural Resources Inc 22
Appendix D - Ocean Power Delivery 26
Appendix E - Orecon 31
Appendix F – TeamWork 36
Appendix G - WaveBob 41
Appendix H - WaveDragon 46
References 51

Introduction

E2I EPRI is leading a U.S. nationwide, government/industry, public/private collaborative program to assess and demonstrate the feasibility of offshore wave power to provide efficient, reliable, cost-effective, and environmentally friendly electrical energy. E2I EPRI strives to initiate momentum towards the development of a sustainable commercial market for this technology in the U.S. and thus provide economic benefits and job creation. State energy agencies and utilities from four (4) states (Maine, Oregon, Washington, and Hawaii) and the Department of Energy (DOE) National Renewable Energy Laboratory (NREL) and E2I EPRI are collaborating to accomplish a project definition study in CY 2004. This study will produce system designs for wave energy conversion device power plants, performance estimate and economic assessments for one site – wave energy conversion device per state. This scoping effort is intended to provide the information needed by funding decision makers to decide whether or not to proceed to the next phase of work, detailed design, permitting and financing.
E2I EPRI contacted all known Wave Energy Conversion (WEC) Device manufacturers in December, 2004. Information needed to assess the potential application of WEC devices to offshore sites was requested from those manufacturers. The WEC Device information received was assessed and compared in February and March 2004 in order to establish a decision-making basis for the advisors in this project.

A Request for Information (RFI – reference 8)) was sent to the seventeen (17) WEC device manufacturers listed in Table 1. Twelve (12) supplied information, three (3) declined to respond and two (2) wanted to respond but were unable to. The three that declined were Ocean Power Technology of the US (no reason given), WaveGen of the UK (does not have a near-shore/offshore system ready within the time frame of our project) and Hydam Technologies of the UK (device designed to desalinate water, not for electric power production). The two that were unable to respond were Float Inc. of the US (in the process of patent protection – E2I EPRI would not sign a nondisclosure agreement because the project is a public benefit project with full public disclosure) and Ocean Wave Energy (the principal was out of the country and only returned after the deadline date for responding had passed).

Table 1. Wave Energy Conversion Device Manufacturer Contacted

Manufacturer Website	**Street Address**	**Country**	**Device Name**
AquaEnergy www.aquaenergygroup.com	P.O. Box 1276 Mercer Island WA 98040	United States	AquaBuOY
Energetech www.energetech.com.au	The Avenue Randwick NSW	Australia	Offshore OWC
Float www.floatinc.com	1660 Hotel Circle Suite 725, San Diego, CA 92108	United States	Pneumatic Stabilized Platform
Manufacturer	**Street Address**	**Country**	**Device Name**

Website			
Hydam www.wave-power.com	1 Bishops Court, New St. Killarney, Co Kerry	Ireland	McCabe Wave Pump
Independent Natural Resources www.inri.us	Minnesota	United States	SEADOG – water pump
Ocean Power Delivery www.oceanpd.com	104 Commercial St. Edinburgh,EH6 6NF	United Kingdom	Pelamis
Ocean Power Technologies www.oceanpowertechnologies.com	1590 Reed Road Pennington, NJ 08534	United States	PowerBuoy
Ocean Wave Energy Company www.owec.com	Bristol, Rhode Island	United States	Ocean Wave Energy Converter
Ocenergy www.owec.com	54 Beach Rd, Norwalk, CT	United States	Wave Pump
OreCON Ltd www.orecon.com	The Money Centre Drake Circus, Plymouth, PL 4	United Kingdom	MRC1000
SeaPower Group www.seapower.com	Essingeringen 72C 11264 Stokhom	Sweden	Floating Wave Power Vessel
Teamwork Tech www.waveswing.com	De Weel 20, 1736 KB Zidewind	Netherlands	Archimedes Wave Swing
U.S. Wave Energy No known website	65 Pioneer Drive Longmeadow, MA 01106	United States	Wave Energy Module
Wave Dragon ApS www.wavedragon.net	Blegdamsvej 4 1st Floor, DK-2200 Copenhagen	Denmark	Wave Dragon
Waveberg No known website	3920 Goldfinch Street, San Diego, CA 92103	United States	Water Pump
WaveBob Ltd No known website See www.irish-energy.ie	Blessington	Ireland	Wavebob
WaveGen www.wavegen.co.uk	50 Seafield Road, Longman Industrial Estate, Inverness IV1 1Lz	United Kingdom	Offshore OWC

Assessment Criteria

The following assessment criteria and categories were used to evaluate the WEC devices. The criteria were the same as defined in the RFI. The main categories and subcategories for the assessment are defined below:

Technical Issues: Core technical issues are addressed in this section for major subsystem/functionality of the device. The assessment focused on assessing the design maturity and the identification of critical issues as it relates to a potential demonstration installation. The devices were analyzed on the following issues: 1) Structural Elements, 2) Power Take Off, 3) Mooring, 4) Survivability/Failure Modes, 5) Grid Integration, 6) Performance/Tunability, 7) Operation & Maintenance 8) Deployment & Recovery and 9) Design Tools.

Because the technical topics are complex and require basic understanding of the technologies involved, the reader may need to become familiar with wave power technologies background. A number of books that provide these backgrounds are listed as references 1 through 5. As one example of a background prerequisite, the reader might not be familiar with terms such as "point absorber", "attenuator" and "terminators" used in the wave energy literature and in this report. WEC devices have been classified according to their size and orientation. Devices that are very small compared to a typical wavelength (waves of interest for energy production vary from 40 to over 300 meters in length) are termed "point absorbers." The counterpart of point absorber is elongated floating structures that are comparable to or larger than one wavelength. If they are aligned roughly in the direction of the wave propagation, they are termed "attenuators." If they are roughly aligned perpendicular to the direction of wave propagation, they are called "terminators."

Cost: This section assesses the likely range of capital requirements for the device if purchased from the manufacturer. This cost estimate does not include the cost to develop the site and establish the required infrastructure for deployment and operation, such as power cables, grid interconnection and mooring. It is important to understand that costs for devices in an early stage of development are uncertain. The accuracy of cost estimates as a function of the development stage is explained on an earlier report, E2I EPRI WP-US-002, Cost of Electricity Methodology (reference 6). All cost are expressed in 2004 constant US dollars.

Device Developer Criteria: This criterion addresses soft issues such as the willingness to license the technology and company viability.

State Applicability: This criterion determines if a device has a design advantage or disadvantage based on the preliminary assessment of wave and bathymetry data of a particular State. Installation water depth and resulting proximity to shore and device performance are key measures.

Initial Screening of Companies

The information received in response to the RFI was screened based on three core criteria:

1. Was the device team responsive to data requests making an initial assessment possible?
2. Is the device likely to be ready for demonstration by 2006?
3. Is survivability addressed satisfactorily in the response?

SeaPower and U.S. Wave Energy provided some information, however, stated that they did not have the resources to be fully responsive to the RFI. Screening results of the remaining ten (10) companies that provided information in response to the RFI package are listed in Table 2 below

Table 2: Initial Screening of Responses

Company	Device Name	Technology Readiness	Survivability
Aqua Energy	Aqua BuOY	Yes	Yes
Energetech	OWC	Yes	Yes
Independent Natural Resources	Wave Dog	Yes	Yes
Ocean Power Delivery	Pelamis	Yes	Yes
Ocenergy	WavePump	No	Yes
OreCON	Offshore OWC	Yes	Yes
Teamwork	Wave Swing	Yes	Yes
Waveberg	Waveberg	No	Yes
WaveBob Ltd.	Wavebob	Yes	Yes
Wave Dragon	Wave Dragon	Yes	Yes

Of the ten companies that provided responsive information, eight (8) devices passed the initial screening criteria. These devices were then assessed in more detail with the objective of determining any critical issues and recommending RD&D needed to achieve technological readiness for a pilot plant at sea demonstration.

Two manufacturers did not meet the technology readiness criteria. In order to meet the technology readiness by 2006 criteria, a device must be at a stage of development such that numerical models have been developed and validated in wave tank testing and funded plans for at least short term testing of a full scale pre production prototype device in the ocean to be completed by the end of 2005. These two companies are in the early stages of development and many core R&D issues remain to be addressed making those devices unsuitable for this demonstration project at this time.

- The *Ocenergy* device is at the conceptual design stage. The company is currently developing a numerical model of their device and is considering the efficacy of subscale wave tank testing.
- The *Waveberg* is at a stage of development where core R&D issues remain to be addressed. At present, there is no Waveberg Company to address the R&D issues.

Plans are underway to create such a company. Therefore, there is not a program in place to provide for testing of a full-scale pre production prototype device in the ocean to be completed by the end of 2005.

Data Sources and Methodologies

RFI responses varied greatly from manufacturer to manufacturer both in quality and depth of data that could be used to assess the device (references 9 to 16). In addition, the development status varies greatly from device to device, making early stage devices more difficult to assess. The approach used to assess the devices was to use the RFI responses as a data source. Data that raised concerns were investigated and analyzed in more detail. The device performance supplied by the manufacturer was used to analyze likely annual outputs for each of the states. In order to come up with levelized comparisons, the following procedure was used:

- Performance was calculated for each sea-state using the methodology developed by this E2I EPRI Project (reference 7 - E2I EPRI Guidelines for Preliminary Estimation of Power Production by Offshore Wave Energy Conversion Devices).

- A generation capacity limit was imposed limiting power capture for larger waves. The generation capacity limit was adjusted to yield a specific capacity factor. The capacity factor values used were 40% for hydraulic power take off systems, 33% for pneumatic and low head hydro power take off systems, 50% for oscillating water columns with an intermediate hydraulic stage and 20% for direct-acting, reciprocating linear generator power take off systems.

It is important to understand that the capacity factor of any given device will ultimately be an optimization between the device cost and the power output and will depend on a large number of parameters such as wave power plant size, wave regime and power conversion. Such parametric optimization was not part of the current phase and will be evaluated in more detail in later tasks of this project. The technical reviews in the appendix of this report were sent out to each of the manufacturers (except for INRI which was added at the very end of the process). This was done in order to make sure the content was accurate and to provide the manufacturer with an opportunity to clarify potential issues.

1,500 MWh Pilot Plant and 300,000 MWh Commercial Plant Rough Sizing

For the rough sizing of a 1,500 MWh pilot plant and a 300,000 MWh reference commercial plant, the assumption has been taken that the implementation location Coquilles River Reference Station Oregon with an annual average wave power density of 21.2 kW/m. These up-scale considerations are meant to serve as a point of reference to provide the reader with an understanding of the implications and differences between different technologies for these two plants. In order to account for the different capacity factors of the different device types, annual energy output (MWh), rather then rated capacity (kW installed) is scaled. A 500 kW and 100 MW power plant would have an annual energy

output of about 1,500 and 300,000 MWh per year respectively assuming a 40% capacity factor. The WEC device annual energy production estimates shown in Table 3 were made using manufacturer-provided capture width ratio (CWR) tables (a CWR value for each cell in the scatter diagram), the E2I EPRI performance estimation methodology descried in Reference 7 and an assumed capacity factor as explained in the previous section of this report. Excel worksheets of the calculations are available upon request. Table 3 shows that four of the devices are designed at a size that exceeds the postulated 1,500 MWh size of the proposed pilot plant. The Wave Dragon cannot accommodate a downscale without a significant economic penalty. OreCon and WaveSwing, could accommodate a downscale, albeit, with additional design and development costs. The 1,500 MWh size of the pilot plant is an arbitrary size and can be increased to match the size of the selected WEC device.

Table 3: Up-Scale Consideration for 1,500 MWh Pilot Plant (500kW at 40% capacity factor)

Company	Device Width (meters)	Device Annual Production (MWh)	Number of Devices Required
Ocean Power Delivery	4.63	1,337	1.2
Energetech	35	2,275	0.66
Wave Dragon	260	12,000	0.12
Wave Swing	9.5	3,078	0.49
WaveBob	15	1,147	1.31
Aqua Energy	6	105 - 186*	8 - 14.*
OreCON	32	4,661	0.32
INRI	5.4	139	11

* Based on performance uncertainties provided by AquaEnergy

Scale up considerations for a 300,000 MWh plant are shown in Table 4.

Table 4: Up-Scale Consideration for 300,000 MWh Reference Commercial Plant (100MW at 40% capacity factor)

Company	Device Width (meters)	Device Annual Production (MWh)	Number of Devices Required
Ocean Power Delivery	4.63	1,337	224
Energetech	35	2,275	132
Wave Dragon	260	12,000	25
Wave Swing	9.5	3,078	117
WaveBob	15	1,147	262
Aqua Energy	6	105 - 186*	1613 – 2830*
OreCON	32	4,661	64
INRI	5.4	139	2158

* Based on performance uncertainty provided by Aqua Energy

Cost Estimates

Some of the manufacturers provided a cost estimate of their wave power conversion units excluding installation, mooring and electrical interconnection. Those cost estimates are described in the WEC device manufacturer appendices. Fixed price quotes with specifications, as would expected if purchasing a wind energy conversion device for example, were not provided by any of the manufacturers. The wave energy industry is still in a nascent stage and no manufacturer is yet at the stage of commercial readiness.

Result Summary

E2I EPRI believes that only one of the eight devices evaluated in this wave energy conversion device assessment study is acceptable for selection by the State Advisors for application in a pilot plant for testing without addressing further device specific issues; namely, the Ocean Power Delivery Pelamis. Three devices (Energetech, Wave Dragon and WaveSwing) could be used if a few remaining issues are addressed, which are mostly related to deployment and recovery. The remaining four devices (WaveBob, AquaBuOY, SeaDog and OreCon MRC 1000) are still in an R&D stage of development. They could be used if remaining R&D issues are addressed.

Much attention was focused on where device developers truly stand in the development of their devices and to identify potential issues that could put the current project at risk. It is important to understand that:

- Although there are some full-scale preproduction prototype deployments underway this year, no full-scale and grid-connected offshore wave power plants have been successfully tested (OPD started in-ocean trials in March 2004 and Teamworks wave swing is scheduled for launch in May 2004)

- The offshore environment is hostile making the deployment, operation, maintenance and survivability of wave power conversion devices a challenging undertaking.

Risk reduction and proper planning in every stage of the pilot plant project will be one of the most critical issues to insure project success and avoid costly mistakes. Past wave power projects were delayed or failed because the proper steps were not taken in the design and planning process.

The eight appendices of this report provide the results of the E2I EPRI assessment of the eight (8) WEC devices (in alphabetical order) that could be technologically ready for pilot plant detailed design and permitting in 2005 and beginning of construction in 2006.

In order to provide an indication of the level of design maturity and technological readiness, E2I EPRI has grouped the eight devices into one of 3 categories:

- Group 1 – Development near completion and full-scale long-term testing in the ocean underway

- Group 2 – Development near completion, only deployment, recovery and mooring issues are yet to be validated. Construction of full-scale devices is in some cases completed.

- Group 3 – Most critical R&D issues are resolved. Additional laboratory and sub-scale testing, theoretical simulations and systems integration work is needed prior to finalization of the full-scale design

Group 1 consists of Ocean Power Delivery. This device manufacturer has chosen a low risk technical approach by using a highly survivable design and well-proven technologies and has recently started in-ocean trials at full-scale. The device development program, which was carried out over the last couple of years, provides a significant amount of reassurance, that the device will operate as predicted. Risks were reduced or eliminated at the appropriate scale and consistent reality checks were done in each phase of the program to provide reassurance. It is however important to understand, that even at this stage, there are risks which still remain to addressed in the coming months.

Group 2 consists of Energetech, WaveDragon and Wave Swing. These devices are at a stage where critical R&D issues are resolved and the device manufacturers have funding for and are getting ready for in-ocean technology demonstrations at full scale within the next year. The group may still have some outstanding issues, most of which relate to the deployment & recovery and mooring design.

Group 3 consists of AquaEnergy, INRI, OreCon and WaveBob. These devices are at a stage of development where critical R&D issues are mostly resolved. Some R&D issues remain to be addressed and full-scale engineering still needs to be carried out. As discussed in the appendices, in some cases, additional laboratory and sub-scale testing, theoretical simulations and systems integration work is needed prior to finalization of the full-scale design. The group may still have some outstanding issues in respect to: device optimization, economic optimization and systems integration, many of which can be addressed with R&D programs. In some cases only partial funding is in place to date to carry out these tasks. Choosing devices from group 3 will significantly increase cost for the next task of this project, which is a conceptual design, performance analysis and cost estimate for both a 1,500 MWh and 300,000 MWh system as compared to a group 1 or 2 device. Capital cost prediction accuracy for this task was previously estimated by EPRI at -30% to +30%. The cost accuracy for group 3 devices will likely be in the range of -30% to +80% based on the additional uncertainties associated to their stage of development.

Appendix A - AquaEnergy

Specifications:

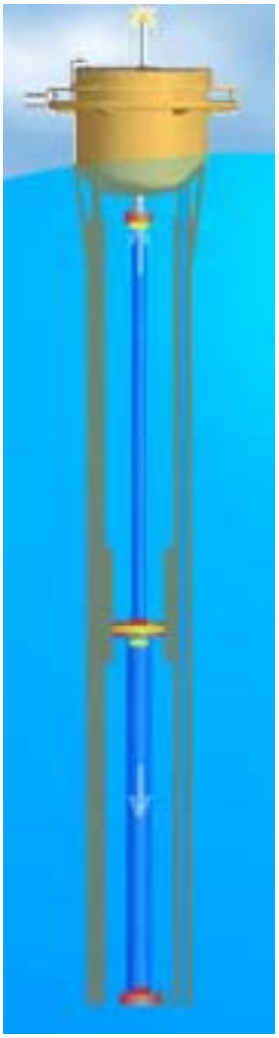

Buoy Diameter:	6m
Draught (water):	30m
Water Depth:	>50m
Power Take Off:	Water Based Low Pressure Hydraulics
Rated Power:	Up to 250kW[1] (depending on sea state)

The AquaBuOY is a freely floating heaving point absorber, reacting against a submersed reaction tube (mass of water). The reaction mass is moving a piston assembly which drives a steel reinforced elastomeric water pump (hose pump). The hose pump is pumping water on a higher-pressure level. An accumulator is used to smooth the power output and the pressure head is then discharged onto an impulse turbine to generate electricity. Grid synchronization is achieved using a variable speed drive and step-up transformer to a suitable voltage level.

[1] The manufacturer states that rated power is "Up to 250kW depending on sea state. A calculation of the annual power production leads to a capacity factor of about 12%. The capacity factor is defined as the average annual power production divided by the rated power. E2I EPRI believes that in order for the device to be cost effective, the capacity factor would need to be increased to 40%, leading to a rated capacity of between 60kW and 100kW in a 21kW/m wave climate.

Technical Issues

Structural Elements

The structure is a steel structure that can be built locally using standard construction techniques available in most shipyards. The structural elements were designed using finite element analysis. There are no significant issues associated with this element, but E2I EPRI recommends a validation of the strength of these structural elements using standard offshore construction standards.

Power Take Off

The power take off consists of a hose-pump, which pumps water into an accumulator to smooth the power output over the wave cycles. The water pressure is then discharged, driving a hydraulic impulse turbine. The power take off can be designed as a closed loop or open loop system. Tuning for the device is accomplished by slowly changing the pressure level in the hydraulic accumulator. (i.e. the device cannot be rapidly tuned to each wave that passes through). The lack of the power take-off system's ability to rapidly tune the system will reduce its performance (as compared to its theoretical maximum) as shown by an earlier study (Reference 1).

The hose pump has been used on a smaller scale for water pumping applications. Some tests were carried out on larger pumps as well by the company. While there are additional risks associated with the introduction of novel components such as the hose pump, it is believed that such risks can be addressed and mitigated.

The overall power take-off power train has been designed conceptually. E2I EPRI recommends the manufacturer carry out further dynamic simulations of the power take off (from wave to wire) to optimize this subsystem and carry out a detailed design study.

Mooring

The mooring consists of a slack-mooring configuration. Because the AquaBuOY is a small device (6 meter diameter), the mooring will be a more important cost component in the overall cost structure than for a larger device for a fixed power plant size.

Assuming a plant made up of 1000 devices, the AquaBuOY mooring design requiring 2.5 mooring lines per device will require about 2500 mooring lines and 2500 anchors. In 50m water depths, the mooring line length is roughly 3 x water depth or 150m of chain per mooring. Total cable or chain-installed length is therefore: 150m x 2500 => 375,000m or 350 km (280miles). Even at a very low failure rate, this will require a lot of intervention for O&M purposes and will critically affect the devices economic viability.

Slack moorings are commonly used in offshore applications where there is a need for the moored device to act freely without being affected by any vertical mooring forces. The AquaBuOY mooring system was successfully tested and proven in the early ocean tests in the North Sea with the predecessor IPS buoy.

Survivability / Failure Modes

The AquaBuOY has successfully solved the end-stop problem. If the hose pumps are elongated to a certain point, the piston assembly in the counter reacting tube will come into an area, where the reaction tube widens. As a result, the water inside the tube is able to bypass the piston assembly and discharge without creating further dynamic stresses in the device structure. As such it is an effective overload mechanism. Failure modes as they relate to mooring design and power-take-off have yet to be analyzed and mitigated through design.

Grid Integration

The AquaBuOY is synchronized with the grid using a variable speed AC-DC-AC converter and the voltage is increased with a step-up transformer. Flexible riser cables connect the devices to a junction box on the ocean floor. This aspect is standard and does not raise any significant concerns, but will still need to be addressed in the design phase.

Performance / Tuneability

Power Output comparison of wave tank testing and theoretical models developed by the company revealed an uncertainty in performance predictions. The root of the uncertainty may be that the system has only modeled the counter reacting tube as a mass without considering hydrodynamic interactions. E2I EPRI recommends that the manufacturer carry out further wave tank testing and theoretical modeling to address this issue and try to reduce hydrodynamic losses.

The performance of this device will be limited by the capabilities of the power take off, which is only able to slowly tune the device to the dominant wave period as outlined in the Power Take Off section.

Operation & Maintenance

Remote monitoring and supervisory controls have not yet been designed. Ease of maintenance concerns come from the difficulty of assessing submersed components. These will likely include the hose pumps, piston assembly and check-valves. In order to carry out any repair on these components, the system will be required to be floated into horizontal position in order to access them. Turbo-machinery elements are likely accessible within the

buoy hull. Alternative O&M strategies are under investigation by the manufacturer that would relieve some of these issues.

Deployment & Recovery

As the AquaBuOY is a relatively small device, it can be easily towed into a nearby port for major overhaul activities. In order to tow it into a nearby port, it would be required to be brought into horizontal position. This can be accomplished using a crane to bring the counter-reaction tube into horizontal position or by pumping air into sub-sea compartments.

Design Tools

A predecessor of the device has been tested in a wave tank and at part scale in the ocean (3.3m diameter). Many results of these tests are not available. Theoretical models in the time-domain and a frequency domain have been created and attempts were carried out to calibrate them using data available from wave tank tests. Potentially large hydrodynamic losses and uncertainties were identified. E2I EPRI recommends that the manufacturer carry out further wave tank tests and improve their theoretical simulations in order to address these performance issues.

Only hydrodynamics have been simulated so far. E2I EPRI believes that a need exists to understand the overall device dynamics of the system and incorporate the power take off, power generation and grid integration portion into this simulation before pilot plant implementation.

Cost

The AquaEnergy cost estimate for plant detailed design, permitting and construction of four (4) AquaBuOYS including mooring, 3.2 nm of underwater cable for grid interconnection, installed and deployed at the Makah Bay site, is $3 million (2004$). This cost estimate does not include post installation O&M or testing and monitoring costs.

Performance by State

The following performance is estimated based on device manufacturer performance input and the preliminary wave assessment. The manufacturer also quotes a capacity per device of 250 kW, with an associated capacity factor of about 12% (assuming a 25kW/m wave climate). Because this appeared inherently low for this type of a device, the capacity factor for estimating power output was set to 40% and rated capacity and performance values were recalculated. E2I EPRI believes that a capacity factor of around 40% typically provides a near optimal economic value of electrical energy for this type of a device (i.e., a balance of investment of capital for the device and device output). A low value means that a device may have sub optimal economics. The performance table below provides output values based on a 40% capacity factor using idealized or optimistic assumptions of Aqua Energy's

theoretical simulation (i.e. not accounting for potentially large hydrodynamic drag losses of the counter-reacting tube) and another set of output values based on a pessimistic assumption (a drag coefficient of 0.7) as provided by the manufacturer.

The Excel worksheets (Reference 17) used to calculate the estimated annual energy production are available upon request.

Performance by State for Aqua Energy's AquaBuOY

State	Wave Power Density	Estimated Annual Energy Production	Assumed Capacity Factor
Maine	12.4 kW/m	81 – 124 MWh	40%
Oregon	21.2 kW/m	105 – 186 MWh	40%
Washington	26.5 kW/m	110 – 196 MWh	40%
Hawaii	15.2 kW/m	103 – 168 MWh	40%

* Based on performance uncertainty provided by Aqua Energy

State Applicability

The device features a reaction-tube, which extends roughly 30m down into the water. It will require a water depth of about 50m for an implementation. Because of relatively shallow waters on the east coast closed to shore, the device may be better suited for the West Coast or Hawaii. The East Coast could potentially be used for the device, but the deployment site, would most likely have to be located at a greater distance to shore, therefore increasing the transmission cable cost.

Development Status

- Sub-scale (3m diameter) sea trials of IPS buoy (same hydrodynamic design but with different power take off system) performed in the North Sea – 1981
- Wave tank testing of subscale hydrodynamic model at Cork Ireland as a part of European OWEC-1 project - 1996
- Numerical modeling carried out by AquaEnergy (Kim Nielsen is on loan to AquaEnergy from Ramboll) - 2003
- Mooring configuration for Makah Bay undergo wave tank testing at Aalborg University in 2003
- Makah Bay pilot plant permitting started in April 2002. Expected completion in 2005

Device Manufacturer Criteria

Company Viability

AquaEnergy is a startup company funded by angel investors. The company has acquired funding expected to be sufficient to complete the permitting process and is seeking additional funding/investments and R&D grants.

Local Manufacturing

Aqua Energy Group Ltd is a US company. All equipment except for the hose pump will likely be manufactured in the U.S.

Licensing

The company is willing to license the technology under acceptable terms.

Appendix B - Energetech

Device Description

Energetech is developing an oscillating water column that can be deployed in water depths of up to 50m (150feet). The device features a parabolic focusing wall, which is used to focus waves onto the oscillating water column. The oscillating water column converts that motion into electrical energy. The key innovative feature of the device is the reversible (or 2 –way) variable pitch blade air turbine used which raises the average conversion efficiency from roughly 30% to 60% compared to the fixed pitch blade designs. While Energetech has originally focused on shore-based devices, this mooring configuration allows the device to be placed in water depths of up to 50m.

Specifications:

Parabolic Width:	35m
Structural Steel Weight:	450tons
Centerline Device Spacing:	60-90m
Rated Power:	500kW – 2MW (depending on wave climate and device dimensions)
Power Take Off:	Variable Pitch Air Turbine
Water Depth:	Shore based to 50m

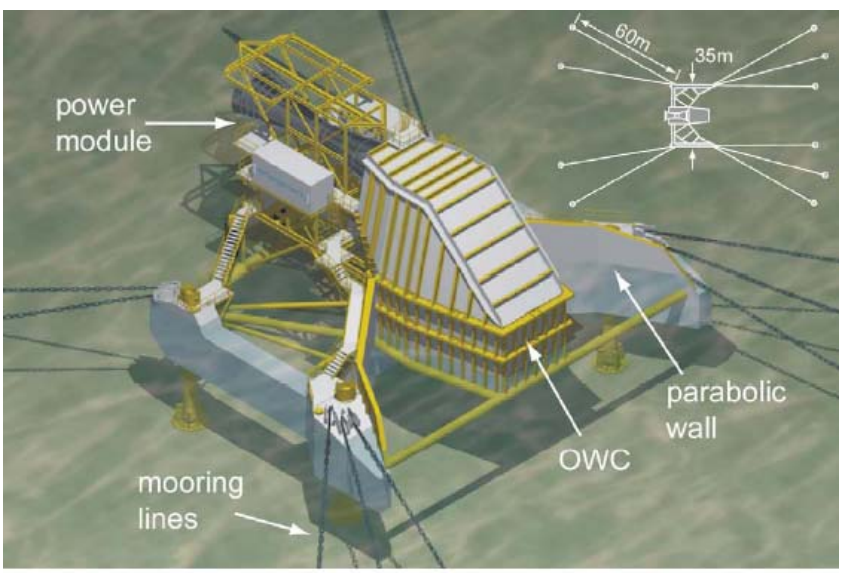

Technical Issues

Structural Elements

The structure is a steel structure, which can be built locally using standard construction techniques. The structural design is well advanced, having undergone significant modeling and engineering efforts and is designed according to standard offshore construction standards.

Power Take Off

The power take off features a variable speed pitch blade air turbine, which has been designed specifically for the purpose of converting ocean wave energy. Being a special purpose machine and having a higher design complexity then the fixed pitch blade turbine, there are some risks associated to O&M activities with this element. However, the power take off has undergone significant theoretical modeling and lab testing and does not raise any significant concerns with respect to a demonstration.

Mooring

The current guyed tower design, for Energetech's forthcoming Port Kembla wave energy plant, utilizes an asymmetric mooring arrangement with 6 forward mooring legs and 4 rear mooring legs in approximately 10m mean water depth. The structure is supported vertically on 4 mooring legs that are pinned to the structure and the seabed. This guyed mooring arrangement is expected to be economic for water depths from 5m to 50m. Variations within this concept may include the number and make-up of the mooring legs (e.g., use of wire or fiber moorings), the use of alternative anchor points (e.g., driven piles, suction anchors, drag anchors, gravity blocks etc) and the number & location of vertical supports. Alternative fully moored concepts also being developed and these will be suitable for water depths from 20m upwards.

The current mooring arrangement is a critical component in the overall design and E2I EPRI believes that it will need to be looked at closely if this device is selected for demonstration. Unlike freely floating devices, this device is dependent on local site conditions such as ocean floor properties and water depth and we expect that each site will require customization of the mooring. The manufacturer has addressed most of the concerns associated with this mooring system and provided reassurance in the approach taken.

Survivability / Failure Modes

The device was originally developed for a depth of about 10 m. Shallow water will limit the wave loads on structures because much of the energy of large waves is dissipated by the ocean floor. Larger waves will break before they reach the structure. In deeper waters, such natural limitation does no longer exist and can pose a hazard to the structure.

Theoretical calculations and wave tank tests were used to predict survival load conditions and the mooring system was designed accordingly. The mooring system was designed with the assistance of a reputable offshore engineering firm. Discussions between EPRI E2I and this offshore engineering firm provided reassurance in the design approach and survivability of the design in more energetic sites in the US and water depths of up to 50m.

Grid Integration

The power take off features a variable speed generator, inverter some short-term storage and a step-up transformer, which allows for an effective grid interconnection. In addition, the short-term storage features can be used to smooth power output to the grid.

Performance / Tuneability

The power take off used allows to adjust the damping of the oscillating water column in real-time and can effectively tune the device from wave to wave. This rapid tuning capability has a key impact on device output and power quality. In addition, the device uses the variable pitch bladed Dennis-Auld turbine, which effectively increases the average efficiency (air to mechanical) from the 30% of a fixed pitch blade turbine to about 60%. The inherent tuning capability of the device will allow for the evaluation and optimization of different tuning strategies. It is important to understand that such a change in tuning can be done remotely, by uploading a different code via remote link. If the device is located in shallow water, it will see lower energy waves, then if located in deep waters. The result will be a lower energy output. Such energy output will have to be analyzed on a site-by-site basis.

Operation & Maintenance

The device can be accessed by boat for regular maintenance activities. The device will be accessible most easily behind the parabolic wall, which will provide some shelter in moderate seas. The device features extensive remote supervisory and control capabilities, which can be used to optimize the system tuning as well as provide facilities to identify and pinpoint problems and failures. The O&M strategy for this type of device is likely to carry out as many tasks as possible on the device itself and recover the device only in case of critical structural failures.

Deployment & Recovery

The deployment and recovery of this large structure will be a concern. It will likely involve more then one tug boat and some special floatation barge in order to properly place and stabilize the structure during set-down. Further discussions on the subject between the device developer and EPRI E2I showed that such issues are adequately addressed.

Performance & Design Tools

The device performance has been modeled from wave-to-wire using different commercial grade design tools. Such data has been validated with wave-tank tests and tests of the individual sub-systems, such as the power train and turbine hydrodynamics. There is high confidence, that the device will respond and perform as predicted.

Cost

Energetech estimates the cost for a single device at $2.5 million – $3.0 million (2004 $) by 2006. For multiple devices, this cost would drop to roughly $2.0 million. For a commercial scale power plant, further cost reductions can be expected. Costs for mooring, interconnection, commissioning and O&M are not included in the above estimate.

Performance by State

The following performance is estimated based on device manufacturer performance input and the preliminary wave assessment carried out for each State. It is important to understand, that the device performance assessed was based on deep-water wave data. Depending on the depth selected for the pilot plant and commercial plant designs, the average annual wave power density may be less than shown on the following table. If Energetic is selected by one of the states for as the device for its pilot site, this issue will be addressed at that time. Near shore installation locations for this device will result likely in a lower energy output.

Performance by State for Energetech OWC (provided by manufacturer)

State	Avg Annual Wave Power Density	Estimated Annual Energy Production	Assumed Capacity Factor
Maine	12.4 kW/m	1631 MWh	33%
Oregon	21.2 kW/m	2275 MWh	33%
Washington	26.5 kW/m	2844 MWh	33%
Hawaii	15.2 kW/m	1631 MWh	33%

State Applicability

Being a bottom-standing wave power conversion device, the device is well suited for shallow-water locations, which are primarily found on the US east coast. It will be able to exploit wave hot-spots in shallow water locations on the east coast. Hot spots are locations, where waves are being focused based on natural ocean floor features increasing the wave height. This device would greatly benefit from a detailed wave and bathymetry analysis to identify the location of such hot-spots in close proximity to shore as these locations have the potential to yield superior economics.

It can however also be effectively used on the west coast and in Hawaii in shallow water locations and in deep-water locations up to 50m water depth. Mooring and Survivability will need to be looked at in detail for these locations and local conditions might require reinforcement of the device structure.

Development Status

- Subscale tank testing completed in March 2004, with final loading and performance data confirming full-scale design (Energetech is not planning any subscale ocean trials)
- Port Kembla Australia Project permitting completed, construction funding acquired and full size system (35 meter wide in 10 meter water) is under construction with installation scheduled for completion in late 2004
- Point Judith RI USA Project permitting and site surveying underway. Project funding is in progress. University-based (URI) wave propagation and environmental studies underway. Results from Port Kembla Project will feed into detailed Point Judith design in 2005.

Device Manufacturer Criteria

Company Viability

Energetech has attracted a total of $5.8 million from sophisticated private investors and investment firms. Among the investors are: Sustainable Asset Management, Progress Now, Prime New Energy and Connecticut Clean Energy Fund. The company is headquartered in Australia, but has established a US company to develop projects in the US (Connecticut). The company is recognized for having a strong technical and management team.

Local Manufacturing

Most of the structural elements for the prototype system will be built locally. Specialized subsystems will most likely come from a central manufacturing facility. There is no reason (except economic considerations), why any of the sub-systems could not be licensed to US companies and manufactured in the US.

Licensing

The company is willing to license the technology under acceptable terms and is pursuing licensing as a core business strategy.

Appendix C – Independent Natural Resources Inc

Device Description

The SEADOG is a bottom mounted heaving buoy absorber. The device consists of a float, which is guided by linear bearings moving on vertical steel struts to move in heave only and a piston connecting the float to the ocean floor. The up and down movement of the float activates the piston pump which pumps sea-water. The SEADOG acts as a water pump, pumping seawater to an elevated basin on shore. The basin then discharges back to sea, driving a conventional hydro-turbine. The illustration below shows the SEADOG concept of the pump-field and power generation station.

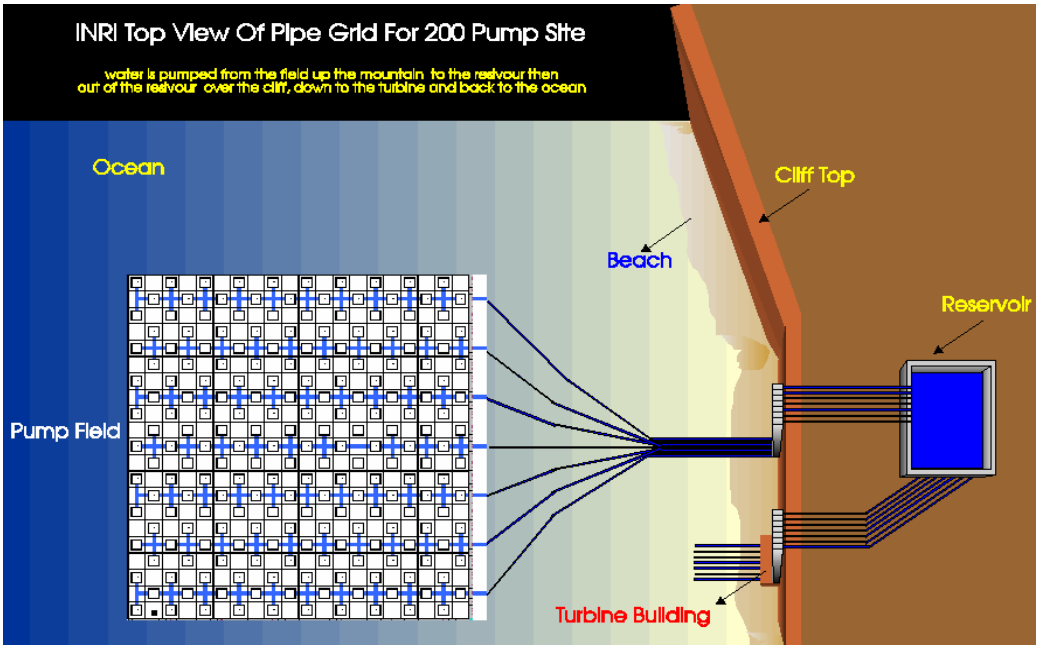

Specifications:

Float Diameter:	5.7m
Structural Weight:	112 tons (mostly concrete ballast)
Centerline Device Spacing:	20m
Rated Power:	Depends on wave climate and device dimensions
Power Take Off:	Sea water pumping mechanism
Water Depth:	20m

Technical Issues

Structural Elements

All structural elements are built from steel and concrete and could be manufactured locally in a construction yard. While the company has provided some design outlines, it has not yet gone through full-scale engineering and design efforts and survival loads have not been simulated or tested in wave tanks, which will be a critical element in establishing appropriate design criteria.

Power Take Off

The Power Take Off on the individual units is a simple water piston, pumping sea water through a sub-sea pipes to shore. While the individual pumping system is very simple and essentially consists of only a piston pump and two check-valves, it has no means of tuning to the wave climate for capturing maximum wave energy as the pumping pressure is fixed by the basin elevation on shore.

Mooring

Initial prototype site will use concrete slabs to anchor the Seadog pumps to the ocean floor. A critical element in the mooring design will be the interconnection of the individual units with the sub-sea piping system. Being a bottom standing device, the SEADOG will require proper sea-bed preparation such as leveling, removing of rocks, laying down of mats for scour protection etc.

Survivability / Failure Modes

The devices floater could be filled with water and ballasted so that it completely submerses in storm conditions. This however will require an advance warning system and water pumps located on the float to ballast and de-ballast the system, adding additional complexities to the system. The company has not tested or simulated survival modes of the system and provided no information on what such survival loads on the system would be at present. These survival loads are a critical issue and will set the design requirements for all structural elements.

E2I EPRI recommends analyzing these extreme-loading conditions using a commercial software package and verifying these loads in a wave tank.

Grid Integration

Electrical Grid Integration aspects are not considered critical as all turbine and generator elements are located on-shore and will be similar to a hydroelectric power plant. The connection of the water pressure lines to shore is considered a critical issue. Installation, operation and maintenance of these pipes will be critical and distance to shore might critically affect economic viability.

Performance / Tuneability

The SEADOG pumps are not tunable. Ballasting of the floater might be used to detune to extreme conditions. The device is unable to use resonant conditions to optimize power output.

Operation & Maintenance

On-shore aspects of the power plant are not considered to be critical as they rely on established hydropower technology. Critical impacts on O&M cost will be submersed systems such as the sub-sea piping systems and the moorings. Bio-fouling and marine growth on piping and water pumps are considered critical as the system uses seawater.

Deployment & Recovery

Individual units are likely deployed and recovered from a barge. Critical elements in the process are likely related to the connection and disconnection of the water pipes to the system. The proper placement will likely require some sub-sea intervention.

Performance & Design Tools

No information was given on how exactly performance is modeled theoretically. Performance of the device was evaluated in a wave tank using sinusoidal waves only. Being a device that is not tunable to the wave climate, performance in regular waves will be higher then in random (real) seas. EPRI E2I recommends the performance analysis and device optimization using commercial grade design tools and additional wave tank tests in irregular seas.

Cost

Independent Natural Resources Inc estimated a costs of $2,997,000 to install a 750 KW, 16 pump SEADOG System. Included in this number are quotes from all service providers and manufacturers. This level of field installation includes quotes for pumps (materials and manufacturing), concrete pads, piping grid, dive teams, turbines with generators, grid tie inverters, reservoir tank, permitting, labor and assembly.

Performance by State

The following performance is estimated based on device manufacturer performance input and the preliminary wave assessment carried out for each State. Performance uncertainties are significant as the company did not carry out any performance tests in irregular seas and performance is likely optimistic. EPRI E2I did not have the resources to carry out any performance verifications. The excel worksheets (Reference 18) used to calculate the estimated annual energy production are available upon request.

Performance by State for Independent Natural Resources Inc SEADOG

State	Avg Annual Wave Power Density	Estimated Annual Energy Production	Assumed Capacity Factor
Maine	12.4 kW/m	117 MWh	40%
Oregon	21.2 kW/m	139 MWh	40%
Washington	26.5 kW/m	167 MWh	40%
Hawaii	15.2 kW/m	125 MWh	40%

State Applicability

The device is very site specific, requiring deep water in close proximity to shore (to reduce pipe length) and steep coastal features to locate an elevated basin to pump water into.

Development Status

INRI has built and tested a laboratory prototype of the SEADOG pump and filed patent applications covering the SEADOG pump and pump systems. INRI built a 1/4-scale prototype that was tested by Texas A&M University using regular waves.

INRI has stated that it has plans and committed resources (i.e., funding, staff, etc) to accomplish a 16 pump (full scale pump) by October 2004.

Device Manufacturer Criteria

Company Viability

Independent Natural Resources is a startup company and has attracted seed money from angel investors and states that these investors are committed to fund the next phase.

Local Manufacturing

Most of the structural elements for the prototype system will be built locally.

Licensing

The company is willing to license the technology under acceptable terms.

Appendix D - Ocean Power Delivery

Device Description

Ocean Power Delivery is developing a freely floating hinged contour device. The device looks like a snake, floating on the ocean surface. The device consists of 4 tubular sections, connected by 3 hinges. The 4 sections move relative to each other and the hinges convert this motion by means of a digitally controlled hydraulic power conversion system. The total device length is 150m (450 feet), with a tube diameter of 4.63m. A full-scale pre-production prototype has been recently built and is currently undergoing sea-trials off the coast of Scotland.

Specifications:

Total Device Length:	150m
Device Diameter:	4.63m
Centerline Device Spacing:	150m (2-3 Rows stacked)
Structural Steel Weight:	380tons
Rated Power:	750kW (depending on wave climate)
Water Depth:	>50m
Power Take Off:	Hydraulic using bio-degradable fluids

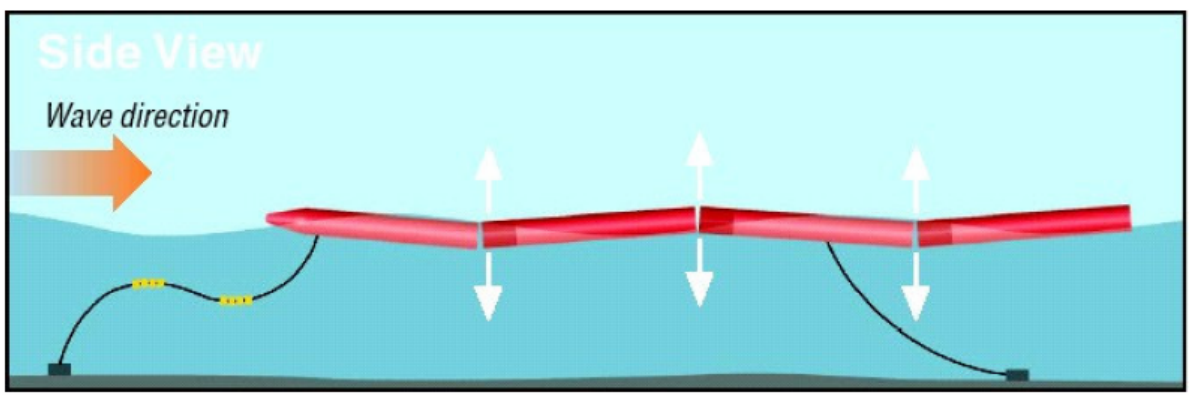

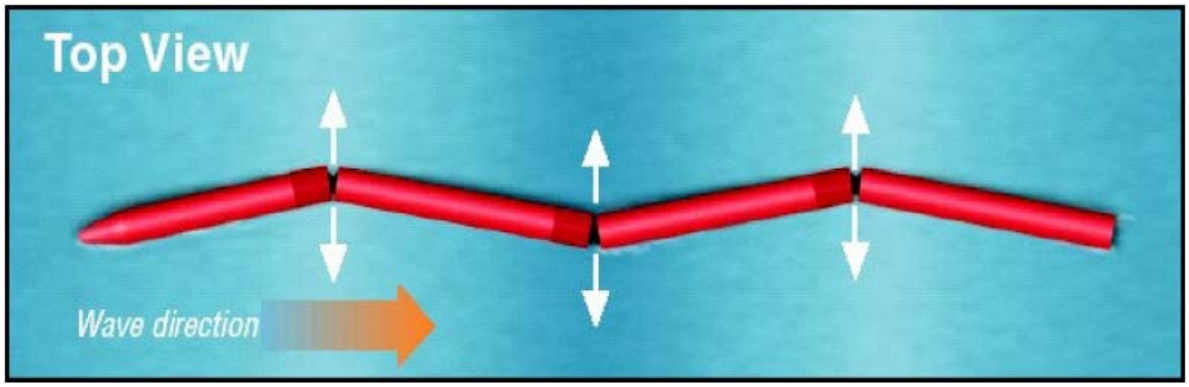

Technical Issues

Structural Elements

The structure is a steel structure that can be built locally using standard construction techniques available at most shipyards. The device structure has been designed using standard offshore construction standards and a leading offshore technology-consulting firm independently verified the design.

Power Take Off

Each hinge of the device contains its own hydraulic power take off. Each power take off contains a total of 3 hydraulic rams, which convert the motions into hydraulic pressure. Using accumulators and two 125kW generator sets, the hydraulic power is generating electricity. The hinges and power conversion mechanism have undergone full scale testing on a test-rig and have been integrated into the full-scale device. The hydraulic systems use biodegradable hydraulic fluids, which complies with the German 'Blue Angel' Environmental standard.

Mooring

The mooring consists of a 3-point slack-mooring configuration. The mooring allows the device to turn into wave direction within its mooring constraints. The mooring and survivability of the system has been simulated theoretically and tested in wave tanks. While the mooring is probably the least mature element in the overall system and will need to be looked at closely and adapted to the specific site requirements, it does not raise any concerns. The mooring and survivability has been independently analyzed and verified by one of the leading offshore technology consultancy firms and is designed to withstand the 100-year storm wave.

Survivability / Failure Modes

The Pelamis has excellent survivability characteristics. Being a relatively narrow device, which will point into the wave and is able to completely detune to large waves, it will always minimize loads on its mooring system. The power take off and control subsystems have been designed with many redundancies in place to minimize reactive maintenance such as the required intervention after a storm.

Grid Integration

The device features a frequency converter and an on-board step-up transformer. As such, it is able to completely synchronize with the wave farm transmission voltage. A flexible riser cable connects the surface device to a junction box sitting on the ocean floor. The current prototype is due to be connected to the grid by June this year, feeding power into the grid.

Performance / Tuneability

The device is able to rapidly tune to the incident wave climate using it's digital controlled hydraulic system and detune to over-sized waves. A large amount of effort has gone into optimizing the devices tuning and associated efficiency. The hydraulic power conversion train has an average efficiency of 80% and future versions will likely show improvements in conversion efficiencies.

Operation & Maintenance

Device maintenance will be carried out at pier- side. The device is designed to be quickly disconnected from its mooring and towed into a nearby port for maintenance overhauls. Many subsystems, such as power modules, are designed in such a way that they can be lifted out with a crane and replaced with a tested subsystem. Remote diagnostic capability, extensive instrumentation and a high level of redundancy will minimize the physical intervention requirements and will allow O&M activities to be carried out during suitable weather windows. The effectiveness of this O&M strategy will still need to be evaluated with in-ocean trials which are due to commence in the summer of 2004. The device is currently undergoing functionality tests, in preparation for the grid-interconnected sea trials.

Deployment & Recovery

The device is designed with quick deployment and recovery in mind. The power and three mooring connections can be quickly disconnected from a tug, the devices nose attached to a special harness and towing can begin. This approach requires a minimal amount of time spent offshore and will reduce the weather windows required to deploy or recover the device. The slender and long steel structure, will allow for a simple towing-operation using a single handler tug. The devices tow-ability and handling has been tested at full scale.

Design Tools

The Pelamis has been optimized using custom software to simulate hydrodynamics and overall system dynamics. The models were done in frequency and time domain and correspond very well with measured results. A total of 14-wave tank test programs were carried out to assess, validate and optimize the device for power capture, survivability and mooring requirements. The tests were carried out at 1:80, 1:35, 1:33, and 1:20 scale.

In addition, a full system 1:7 scale unit was tested in the ocean. The device was moored to a vessel to allow for simple testing. All hydraulic subsystems and electrical controls were the same as on the full-scale device with the only difference being the system pressure being lower and the power generation system being a simple discharge valve instead of an electrical generator. These changes were necessary as the production of such a small device does not scale linear with power production and a power generation unit would not add significant value. As a matter of fact, power output scales to the power of 3.5 of the linear scale, resulting in a power output at 1:7 scale of roughly 0.1% of the full-scale device.

Cost

The cost for a single device is estimated by Ocean Power Delivery at $2 to $3 million (2004 constant dollars). Cost of the mooring system is not included in the above estimate.

Performance by State

The following performance is estimated based on device manufacturer performance input and the preliminary wave assessment carried out for each State. The manufacturer evaluated different configurations for the east coast and the west coast to optimize energy yield based on the wave data provided by EPRI E2I. For the purpose of comparing annual production values (MWh), the device capacity was adjusted to yield a 40% capacity factor. While the optimal capacity factor does depend on a number of factors, this method has been consistently applied for devices under investigation with hydraulic power take off.

The Excel worksheets (Reference 19) used to calculate the estimated annual energy production are available upon request.

Performance by State for Ocean Power Delivery's Pelamis

State	Wave Power Density	Estimated Annual Energy Production	Assumed Capacity Factor
Maine	12.4 kW/m	1076 MWh	40%
Oregon	21.2 kW/m	1337 MWh	40%
Washington	26.5 kW/m	1587 MWh	40%
Hawaii	15.2 kW/m	1143 MWh	40%

State Applicability

Although the Pelamis mooring system is designed for a water depth of 50m for its ocean trials testing, being a device that has a very shallow draft, it could potentially be located in more shallow waters. The device would be a good candidate for the East Coast, the West Coast and Hawaii.

Development Status

Ocean Power Delivery has developed the Pelamis design through many stages of subscale wave tank testing and subscale sea trials and now has built a full-scale preproduction prototype. Full scale pre production prototype sea trails began in March 2004.

Device Manufacturer Criteria

Company Viability

Ocean Power Delivery has attracted a total of $2.5million pounds (US$ 5 Million) from UK government sources and has received over $6.0 million pounds (US$ 12 Million) in private equity investments from a number of large European venture capital firms. The company has demonstrated it's technical capability by taking this device from concept to full-scale using a rigorous approach of eliminating and testing at the appropriate scale.

Local Manufacturing

Most of the structural elements for a prototype can be manufactured in a local construction yard. Depending on the volume, most of the electrical and hydraulic machine elements can also be sourced from US sources.

Licensing

The company is willing to license the technology under acceptable terms or establish local manufacturing facilities.

Appendix E - Orecon

Device Description

Specifications:

Device Diameter:	32m
Water Depth:	> 50m
Centerline Device Spacing:	100m
Structural Weight:	1250 tons
Rated Power:	1000 kW
Power Take Off:	Impulse Turbine (Air) with intermediary hydraulic stage

OreCons MRC1000 is a multiple resonant chamber oscillating water column, which can be deployed freely floating. The device features multiple vertical capture chambers with various lengths, which have (based on the length of each chamber) different oscillation frequencies. This allows the device to have high efficiency over a wide range of different wave frequencies. The air pressure of the different chambers is combined and is feeding a single impulse air turbine. The rotary motion is converted into hydraulic pressure, which in turn drives a generator set. The unit is catenary (slack) moored to the seabed using six anchors.

Technical Issues

Structural Elements

The structure is a steel structure that can be built locally using standard construction techniques at most shipyards. Detailed engineering on the full-scale structure and fatigue analysis have not yet been carried out.

Power Take Off

The power take off contains 3 stages. The first stage converts the air pressure from the oscillating water column air chamber into rotary motion using an air impulse turbine. The second stage converts the rotary motion into hydraulic pressure. The third stage converts the hydraulic pressure into electricity using a generator.

The power take off is using standard off the shelf equipment and components. There is an increased complexity associated with the intermediary hydraulic stage, which will likely increase operation and maintenance complexity. It will also have an impact on power take off efficiency and add capabilities of storing some energy in hydraulic accumulators. The manufacturer quotes the air-turbine efficiency at 51%. Additional losses will likely come from the intermediary hydraulic stage, generator and step-up transformer. This could lower the overall power chain efficiency to 35%-40% at grid interconnection point.

Mooring

The mooring system consists of a total of six catenary mooring legs (chains) using clump weights as anchors. This mooring configuration conforms to Lloyds Register Rules for floating offshore installations at fixed locations. A reputable engineering firm established the design criteria's for this mooring arrangement.

Survivability / Failure Modes

The device is designed for extreme waves to overtop. Being a large device, its own inertial mass will provide a stable reference and minimize heave of the device. E2I EPRI recommends detailed survivability verification.

Grid Integration

The device is synchronized with the grid by means of controlling the frequency with the intermediary hydraulic stage. It is unclear how well power quality can be managed with this approach and the company has not gone through the detailed engineering efforts to model this grid integration aspect of the device. It is likely, that the device would require a frequency converter to assure power quality and grid integration. E2I EPRI recommends detailed modeling of system dynamics and optimization prior to deployment.

Performance / Tuneability

Tune ability and improved performance are some of the key innovations of this device over other types. This multiple chambers oscillating water column concept allows the system have an increased bandwidth (oscillation at multiple frequencies). The oscillating water column chambers can be easily fitted (resized) to suit a specific wave climate. There seems to be little cost penalty (within 10-20%) for adapting the device to lower energy wave climates, which could be of benefit to East Coast states. Unlike many other rapid tunable devices, this device does not require any sophisticated control mechanisms to re-tune the device as the response frequencies are given by the sizing of the individual capture chambers.

Operation & Maintenance

Being a relatively large device (physically) the O&M strategy will likely focus on carrying most of tasks out on the device itself to reduce recovery and re-deployment activities. Control and supervisory systems have not designed or developed.

Deployment & Recovery

A concern with this device is the large submersed portion of the device, which would have to floated in order to tow it into a nearby port. It is not clear from the device description how this is accomplished, but will likely involve the inflation of submersed portions of the device to bring it into horizontal position. It will likely require more then 1 tug and a special purpose barge. Carrying out O&M activities on the device itself can likely minimize recovery operations.

Design Tools

The device has been tested in wave tanks at linear scales of 1:250, 1:150, 1:250, 1:70, 1:20 (as compared to a full scale 32m diameter absorber device). Because of the difficulty of modeling compressible mediums (such as air), the power predictions of the full-scale device are largely based on empirical models. The large number of different scales provides some assurance in the solidness of such empirical models. In addition, a 5kW in-ocean unit was tested in the ocean. Further wave tank tests to model additional aspects of the system are currently underway.

Theoretical models for the overall device are established. However, the company has mainly used empirical relationships to estimate power outputs. Theoretical models for hydrodynamic interaction, mooring dynamics and power take off have been established or are underway.

Cost

The manufacturer estimates the cost for a single 1 MW device and including mooring and installation in 50m of water, but excluding transmission systems and grid connection costs, to be around 1.7 million UK pounds (around $3 million[2] in 2004$).

Performance by State

The manufacturer provided performance values for mechanical output at the air-turbines shaft. The power train is somewhat special, in that it features an intermediary hydraulic stage, which will effectively decrease the required generator capacity, because the hydraulic stage provides some intermediary hydraulic storage capacity. Performance values were adjusted to yield a 50% capacity factor. Additional power chain efficiency (from mechanical to grid interconnection point) is estimated to be 68%. The results of this performance study are shown in the table below.

The Excel worksheets (Reference 20) used to calculate the estimated annual energy production are available upon request.

Performance by State for OreCon MRC 1000

State	Wave Power Density	Estimated Annual Energy Production	Assumed Capacity Factor
Maine	12.4 kW/m	2782 MWh	50%
Oregon	21.2 kW/m	4661 MWh	50%
Washington	26.5 kW/m	4915 MWh	50%
Hawaii	15.2 kW/m	4488 MWh	50%

State Applicability

The device will require a water depth of 50m or more and is therefore better suited for implementations in Hawaii and the West coast for a demonstration plant. Based on performance values supplied by the device manufacturer, the device would have excellent performance characteristics on the East Coast as well, because the device can be easily tuned to the lower energy sea-states, by adapting the physical dimensions of the oscillation tubes.

Development Status

- Tank testing conducted of 250th and 20th scale in controlled conditions
- Scaled sea trials conducted at 10th scale
- Numerical modeling conducted to integrate results of scaled trials and produce performance predictions in real sea conditions

[2] Using the April 18, 2004 exchange rate of 1 pound = 1.788 US $.

- Industrial development incorporating critical assessment and cost engineering of structural and power take off underway
- Further scaled trials at 20th and 70th scale to be conducted during 2004
- Manufacturing drawings of a 1MW sea trials unit to be completed late 2005
- Deployment of sea trials unit anticipated for 2006

Device Manufacturer Criteria

Company Viability

The development of the MRC1000 has been funded in the past through a combination of R&D grants and private investments. The company is currently raising additional funds to finance its next phase of performing detailed engineering on the device.

Local Manufacturing

All structural elements could be manufactured locally in suitable shipyards or other suitable type of construction yards.

Licensing

The company is willing to license the technology under acceptable terms.

Appendix F – TeamWork

Device Description

Specifications:

Device Diameter:	9.5 m
Device Amplitude:	7m
Water Depth:	43m
Centerline Device Spacing:	80m
Rated Power:	4 MW (depending on wave climate)
Power Take Off:	Linear Direct Induction Generator

Wave Swing is a bottom standing completely submersed point absorber, with a linear direct generator to convert the oscillatory motion into electricity. The upper floater traps air inside, forming an effective spring element. Pressure differences on the top of the float (created by surface wave action), will set the top floater into motion and the system starts to oscillate. The device has been built in full-scale and deployment activities are underway.

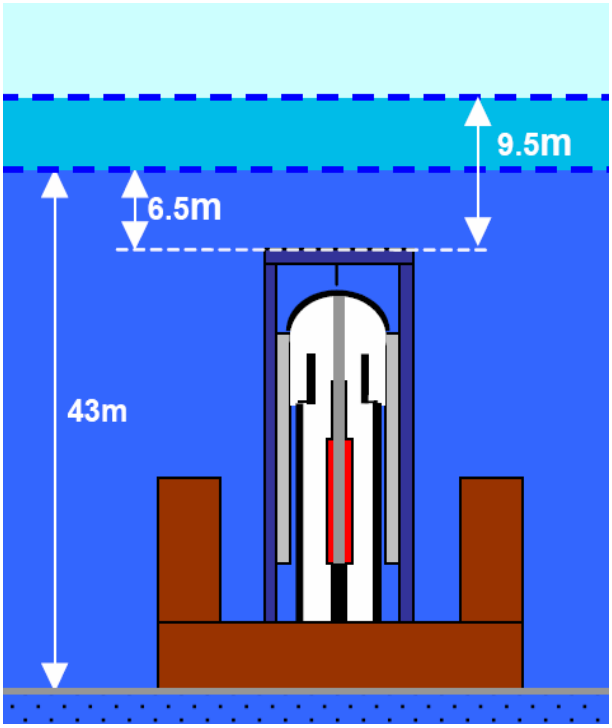

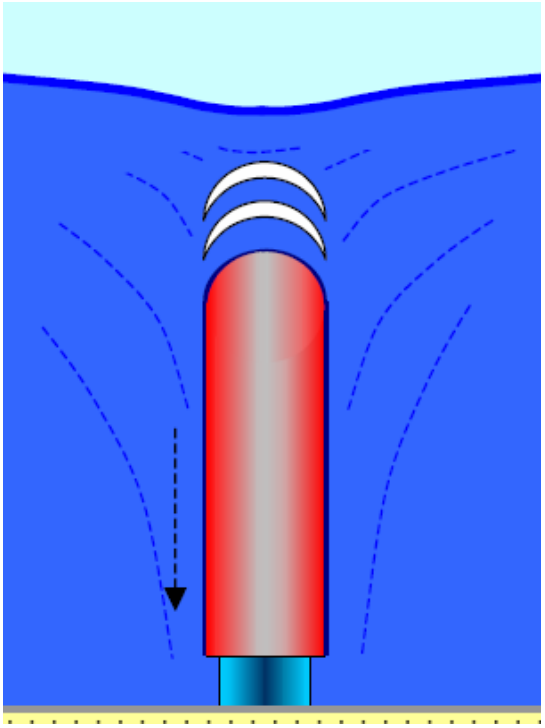

Technical Issues

Structural Elements

The structure is a steel structure that can be built locally using standard construction techniques available at most shipyards.

Power Take Off

The power take off used in the Wave Swing is a direct induction linear generator, which was purpose designed and built for this device. Direct induction generators have been considered for a number of devices and have the promise to significantly reduce operations and maintenance requirements on the device. It is unclear if such systems will prove to be economically competitive. The economic viability of submersed devices will depend largely on a high reliability rating, as costs to repair sub-sea systems are extremely high. As such, the choice of a direct induction system for the particular device is a good option.

Direct-acting, reciprocating linear electrical generators offer potential of efficiency and reliability than the more developed hydraulic turbine rotating electrical generator power take off systems. Hydraulic power conversion machines store energy in high-pressure accumulators and thereby provide a smooth electrical output. A direct acting linear generator has no storage and produces an electric output that varies from zero to rated power over a five to fifteen wave cycle period.

Mooring

The device is mounted on a gravity base and is standing on the ocean floor. Being a bottom standing device it will likely require the seabed to be prepared (e.g. clean off rocks, level the ocean floor) and put anti-scour means in place. As such, the local geo-technical assessment will be an important siting consideration.

Survivability / Failure Modes

The device can be effectively detuned in large waves by filling the sub-sea air chamber with water, effectively changing its spring-rate and therefore its oscillation frequency. Reaction forces can be effectively eliminated under these conditions. Being a submersed device, the impact in storm conditions is less severe.

Grid Integration

The current system uses a direct induction generator. Frequency converters and other equipment are located on shore to minimize maintenance requirements for this sub-sea

device. A full-scale grid interconnection system has been designed and built for prototype testing.

Performance / Tuneability

The device can be effectively tuned and detuned using a combination of changing its natural oscillation frequency and change its damping. This rapid tuneability results in high power output. An important characteristic of this device is that oscillation amplitudes can be extremely large. As such, the device draws large benefits from the point absorber effect. A point absorber has the inherent ability to capture a larger amount of energy then the energy available within its width. It does that by increasing its oscillation amplitude. While point absorbers have practical limits such as viscous drag, the wave swing has minimized such effects. Oscillation amplitudes in a standard 2m sea can be 7m for the current design. Smaller diameter devices can have even larger oscillation amplitudes and are limited only by the design.

Operation & Maintenance

O&M aspects for this device are a key concern as the repair of sub sea systems can be extremely costly. It is important to understand, that any O&M activity for this device will require the recovery of the device. Therefore, the device will need to be floated in order to carry out any type of minor repairs.

While the device team is pursuing a low-maintenance strategy by locating critical elements on shore and only using highly reliable components in the device itself (such as a direct induction linear generator), it remains to be proven if such a strategy is cost-effective.

Deployment & Recovery

The mooring system as well as the launch and recovery operations for this device is a concern in selecting this device for a demonstration. The company has made a number of full -scale launch attempts and have failed so far to safely deploy the device. While the company has learned a great deal about this aspect of the device, it remains to be proven if the device can be successfully (and economically) launched in a real offshore environment. The current system is mounted on a pontoon, which can be ballasted and sunk into place. Future version will be using a different and improved mooring system based on the lessons learned. The effectiveness of launching and recovering this device will be a critical element of the overall viability of this technology. E2I EPRI recommends that launching and recovery be developed and demonstrated. The company states, that the deployment will be demonstrated during the summer of 2004.

Design Tools

The device has been modeled theoretically. Models were validated by wave tank tests. Control strategies to optimize power production and increase power quality have been tested and optimized. The theoretical base for this system and its verification is well established.

Cost

The current pre-production unit has a floater diameter of 9.5 meters. Teamwork Tech estimates that the cost of this device in production would cost in the range of $4 to 6 million (in 2004 $). The device is also available at no cost for experimentation (FOB Portugal) after it is tested in Portugal.

Performance by State

The manufacturer provided the following performance figures for a single unit with a floater diameter of 9m. Because the device uses a direct-induction power take off, which has no storage capacity, it is unlikely that the device will have a capacity factor of more then 20%. So for the purpose of evaluating annual device output a capacity factor of 20% and power chain efficiency of 85% was assumed.

The Excel worksheets (Reference 21) used to calculate the estimated annual energy production are available upon request.

Performance by State for Wave Swing

State	Wave Power Density	Estimated Annual Energy Production	Assumed Capacity Factor
Maine	12.4 kW/m	1209 MWh	20%
Oregon	21.2 kW/m	3078 MWh	20%
Washington	26.5 kW/m	2653 MWh	20%
Hawaii	15.2 kW/m	1564 MWh	20%

State Applicability

Being a bottom-mounted device, the Wave Swing may be designed to operation in water depths of 30 meters of more. Therefore, the water depth requirement is not as deep as some of the other deep-water devices under development. As such the device would be suitable for implementation in all locations.

Development Status

- Subscale wave tank testing at 1:20 and 1:50 scales in both regular and irregular waves have been conducted
- Numerical models have been developed and validated in wave tank testing
- A full scale pre-production prototype has been built and deployment on the seabed was achieved in May of 2004

Device Manufacturer Criteria

Company Viability

The company has received significant funding from a number of investors over the past couple of years.

Local Manufacturing

All structural elements could be manufactured locally in suitable shipyards. Special components such as turbines could be licensed to US manufacturing companies.

Licensing

The company is willing to license the technology under acceptable terms.

Appendix G - WaveBob

Device Description

Specifications:

Buoy Diameter:	15m
Draught (water):	30-40 m
Centerline Device Spacing:	50m
Structural Steel Weight:	440 tons
Rated Power:	1000 kW (see footnote 3)
Water Depth:	> 50m
Power Take Off:	Standard Oil hydraulics using bio-degradable fluids

WaveBob is a freely floating symmetrical point absorber that is tuned to the incident wave action using a proprietary system to change the devices natural resonance frequency, without changing the floats draught. In addition, a digitally controlled power take off allows the device to dynamically change the damping, which can be used to further tune the system in real-time. WaveBob provided a limited amount of information for assessing their technology. However, at this stage it seemed to be sufficient to determine, that the system could potentially be competitive. A sketch showing the appearance of the WaveBob above the water line is provided.

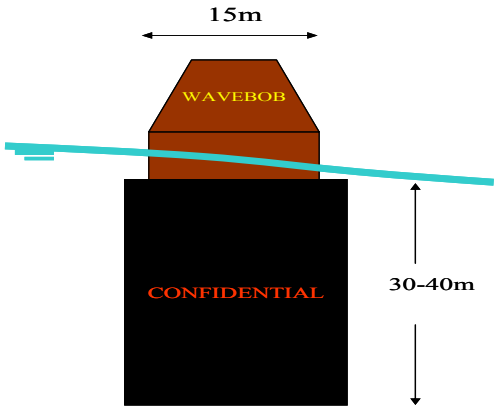

[3] Wave Bob was designed for a much harsher wave climate in the NE Atlantic. Economic optimization to US sites will likely require a resizing of the power take off. This would likely result in a rated capacity of 250kW-350kW.

Technical Issues

Structural Elements

The structure is a steel structure, which can be built locally using standard construction techniques. Little detail on the structural details was available based on the RFI response. It is assumed, that the device would be built from steel plates, sandblasted and painted with a protective coating. Being a standard construction method, which could be carried out in most shipyards, there is little concern for this aspect of the device. The company states that the device is currently undergoing an optimization process, which will likely reduce the amount of steel required.

Power Take Off

The power take off uses only standard hydraulic elements and biodegradable hydraulic fluids to minimize environmental impacts in case of a leakage. The basic hydraulic power take off has been tested at a scale of $1/25^{th}$ and the company has started a program to test the power take off using a motion simulator (to simulate the forces acting on the power take off) at the larger scale of $1/4^{th}$. The company is also running a state-supported program to further develop a more sophisticated power take off and implement more complex control strategies.

Mooring

The mooring is a simple 3-point catenary mooring system, which holds the device in position. Being a good-sized device (15 meter diameter), the introduction of redundant mooring lines is likely not to create significant impact on the economic viability of the device. Alternate mooring options are currently being evaluated in a cost engineering program the company is pursuing.

Survivability / Failure Modes

Wavebob has a built-in overload protection that is design inherent. This inherent survivability characteristic combined with the fact that the device is large in scale and can incorporate back up mooring links without significant cost impacts yields a high survivability rating. The hydraulic power take off has been designed with many redundancies in place to avoid the requirement to recover the device in the case of a failure. These redundancies will significantly reduce unscheduled intervention requirements. In addition, the Wavebob's unique performance characteristics enable it to continue to operate safely in large seas

Grid Integration

The grid integration of the device is standard and does not raise significant concerns. The system is frequency and voltage synchronized and a step-up transformer is used to step up to a common wave farm voltage. Umbilical Riser cables are used to connect the surface devices to a bottom mounted junction box.

Performance / Tuneability

Contrary to most heaving point absorber devices, the WaveBob features a wide natural bandwidth. This allows the device to maintain a high capture width in random seas. In addition, the wide bandwidth will result in better power quality as short-term variations tend to be minimized. The current power take off features a simple power take off without any rapid tuneability. A current Government of Ireland and private investor supported program aims at introducing a more sophisticated, rapid tunable power take off and associated control strategies. This will likely increase the devices energy capture significantly.

Operation & Maintenance

All the main operating components are encompassed in the modular power take off system. The power take off system is surface accessible and all components are readily repaired and replaced at sea. All components used have proven their performance and reliability in other offshore applications. To tow it into a nearby port, the device can be floated horizontally and towed. The devices operation and maintenance strategy is to exchange modular subsystems at sea and only recover the device if required.

Deployment & Recovery

The devices structure extends to between 30m and 40m below the water surface. Having a majority of its structure submersed, it will require some floatation tanks in order to bring it into a horizontal position, which will be required in order to tow it into a nearby port. This will likely increase the time requirements and possibly the vessel handling requirements to recover the device. Initial analysis by a major UK Shipyard, with extensive experience in the Offshore Oil and Gas Industry, provided solutions for deployment & recovery. No major issues were identified.

Design Tools

The device has been simulated in both frequency and time domain and simulations were verified with wave tank tests. The wave tank tests were carried out at a scale of: 1:50, 1:25 and 1:16. Sub-scale in-ocean tests are planned for 2005. Several possible locations are currently being assessed, including the Mediterranean. If successful, these tests will be sufficient to provide a high confidence rating for the device implementation in 2006.

Cost

The manufacturer has not established any estimated costs for a 500kW system.

Performance by State

The following performance is estimated based on device manufacturer performance input and the preliminary wave assessment. In order to allow for a side-by side comparison of the power output to other devices, the capacity factor was adjusted to 40%, by imposing an electrical generation limit on the device. The results are shown in the table below.

The Excel worksheets (Reference 22) used to calculate the estimated annual energy production are available upon request.

Performance by State for WaveBob

State	Wave Power Density	Estimated Annual Energy Production	Assumed Capacity Factor
Maine	12.4 kW/m	523 MWh	40%
Oregon	21.2 kW/m	1147 MWh	40%
Washington	26.5 kW/m	1271 MWh	40%
Hawaii	15.2 kW/m	726 MWh	40%

State Applicability

The device extends to between 30 to40m below the water surface. Therefore, it will require a water depth of at least 50m for deployment. Because of relatively shallow waters on the East Coast closed to shore, the device may be better suited for the West Coast or Hawaii for a device demonstration. The East Coast could potentially be used for the device, but the deployment site, would most likely have to be located at a greater distance to shore than for the West coast or Hawaii deployment, thus increasing transmission-cabling cost.

Development Status

- Completed theoretical analysis and frequency domain modeling
- Completed empirical testing at 1;50, 1:25 and 1”16 scales
- Tome domain modeling ongoing
- Currently progressing the design of a subscale model (1/4 scale) and site selection for open water trials. One promising site has been identified within a bay on the West Coast of Ireland.
- Anticipated sea trials (sub-scale and full-scale) in the near future

Device Manufacturer Criteria

Company Viability

The company has 3 full-time employees (two of them technologists) and development efforts have been ongoing since 1997. The shareholders include the Irish Government (through the Marine Institute), a private Fred Olsen company (a Norwegian with strong offshore and shipping interests), the owners of a leading UK hydraulics engineering company, the inventor, key staff, and connected parties.

Local Manufacturing

WaveBob is built from standard components. There are no reasons that such components could not be sourced and assembled locally. Structural components can be manufactured in local shipyards.

Licensing

The company is willing to license the technology under acceptable terms.

Appendix H - WaveDragon

Device Description

Specifications:

Device Width:	260m – 300m
Reservoir size:	5,000m^3 - 8,000m^3
Water Depth:	>25m
Centerline Device Spacing:	700m
System Weight:	22,000 tons – 33,000 tons (includes steel, concrete and ballast)
Rated Power:	4 MW (depending on wave climate)
Power Take Off:	Adapted Kaplan Turbines (for low head) with Permanent Magnet Generators (250kW – 400kW per turbine)

Wave Dragon is a large overtopping device, which combines a double curved overtopping ramp and two reflector arms, which are used to focus energy onto the overtopping basin. Multiple modified Kaplan-Turbines are used to convert this low pressure head into electricity using direct-drive low speed permanent magnet generators and Kaplan turbines. Device output depends on the wave climates and is in the range of 4-7MW. It is today, the largest device (by rated capacity and physical size) under development. The device is slack-moored and is able to swivel in order to always face the wave direction.

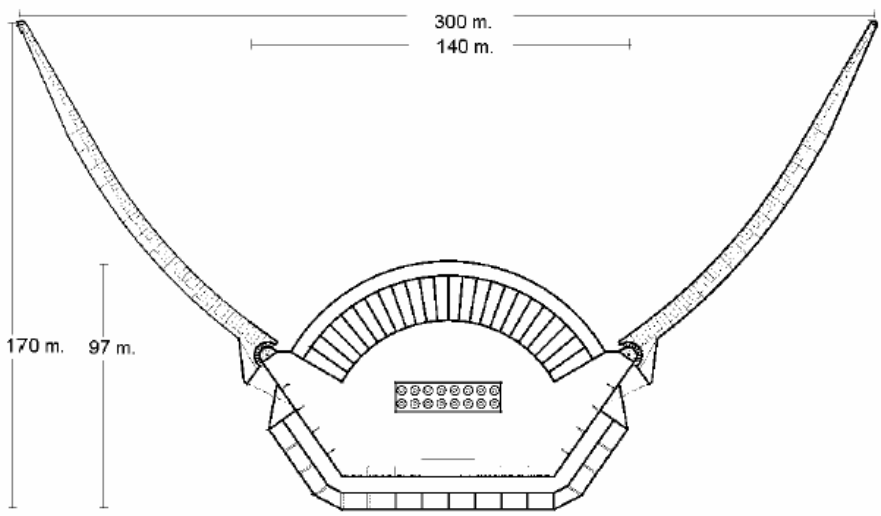

Technical Issues

Structural Elements

The structure is built using a combination of steel and reinforced concrete, which can be built locally using standard construction techniques at most shipyards. Since the WaveDragon is a physically large device, it will require a large construction yard for assembly. The device is currently undergoing part-scale sea trials off the coast of Denmark. The prototype was built at a scale 1:4 and weighs 237 tons.

Power Take Off

The Power Take Off consists of a number of simplified Kaplan Turbines, which were adapted for variable speed operation and are using a direct drive permanent magnet generator to reduce potential maintenance issues associated with gearboxes of Kaplan Turbines. The turbines have been tested in both laboratory and in the ocean on the 1:4.5 scale prototypes. Kaplan Turbines are commonly used for low-head hydro sites and there is extensive operational data available on the systems reliability and performance.

Mooring

The mooring system used for the Wave Dragon is a catenary mooring type. The mooring provides the Wave Dragon with the capability to always turn into wave direction. Being a large device, the mooring is expected by E2I EPRI to be a non-dominant part in the overall systems economics. The mooring has been tested in wave tanks and is now being tested on a 1:4.5 scale in-ocean prototype, providing a significant amount of reassurance.

Survivability / Failure Modes

The device acts like a large floating platform. Being freely floating and inertia based, there is no significant concern, that the device will fail under extreme conditions. The worst case would be, that device breaks free from it's mooring system and starts drifting. Backup mooring lines could easily prevent the device from creating damage in such a situation. Featuring multiple Kaplan Turbines running in parallel, the device will most likely have a very high reliability rating. If one turbine fails the device will continue to produce power. Critical elements from a survivability perspective are the moorings, the electrical riser cable and structural integrity of the device.

Grid Integration

The Wave Dragon is using frequency converters to synchronize with the grid frequency and a on-board step up transformer to interconnect at a suitable voltage level to the wave farm. There is no significant concern associated with these subsystems. Control strategies to optimize power quality have been optimized and tested.

Performance / Tuneability

The device acts as a Terminator[4] and waves run up a ramp to overtop into a basin. The device can be tuned to the prevailing wave climate by changing the draft of the device using air chambers. Unlike point absorbers, this terminator device has a very broad bandwidth. As such its performance is not dependent on rapid tune-ability or other means of changing resonance frequency. It needs to be pointed out, that such a device is a relatively inefficient wave power absorber if measured by the amount of material required to absorb a certain amount of power. It remains to be seen if the device will become a long-term competitive option and can make up for this shortfall, by its economies of scale and the reflector arms, which offset this shortcoming to some extent.

Operation & Maintenance

Being a large and stable platform the WaveDragon will allow for most of the O&M activities to be carried out on the device itself. The large overtopping body of the device will allow approaching vessels to easily dock in its wave shadow in moderate seas. Being a relatively large device it also might allow access by helicopter, which will significantly improve the devices accessibility during stormy seas (e.g. winter). The high reliability of the device and its subsystems will result in low failure rates and resulting low O&M costs. The device features a sophisticated remote monitoring system, which can be used to pinpoint potential issues and manage O&M activities.

[4] A terminator device is a device that will 'terminate' the incoming wave. Tuning for this type of a device is typically less critical as the device will have wider bandwidth. More background material on the topic is provided in Reference 1-5.

Deployment & Recovery

Being a physically large device, it will require multiple tugs for towing operations. It will likely require the large parabolic focusing walls to be disassembled offshore and towed into a nearby port separately from the main structure.

Design Tools

The device has been modeled in the frequency and time domain. Models were validated by wave tank tests and now on part scale in-ocean tests (scale 1:4.5). Control strategies to optimize power production and increase power quality (overtopping and discharge) have been tested and optimized. There are a large number of public reports, which were reviewed and provided assurance on the overall design of the system.

Cost

Because of its inherent nature, the Wave Dragon device cannot be scaled down to the 500kW level of the planned demonstration plant without paying a large economic penalty. The 260 meter wide Wave Dragon device will likely have a rated capacity of around 4MW depending on the particular wave climate. A single device of that size is estimated to cost significantly more than smaller devices. The cost for a single 4MW unit is estimated to be in the range of $10 - $12 million. This is just the device cost. Mooring and electrical interconnection are additive to this cost.

Performance by State

The manufacturer provided the following performance figures for a single unit. Having shorter wave periods on the east coast might provide an advantage for this type of overtopping device, as the device dimensions would likely be smaller.

Performance by State for Wave Dragon (provided by manufacturer)

State	Wave Power Density	Estimated Annual Energy Production	Assumed Capacity Factor
Maine	12.4 kW/m	7038 MWh	34%
Oregon	21.2 kW/m	10938 MWh	34%
Washington	26.5 kW/m	12302 MWh	34%
Hawaii	15.2 kW/m	7240 MWh	34%

State Applicability

Having a shallow draught, the device could be implemented equally on the East and West coast. It will require relatively large harbor infrastructure for manufacturing and O&M operation activities.

Development Status

- Extensive hydrodynamic numerical modeling
- Extensive wave tank testing and validation of numerical models and survivability in 100-year storm waves
- Developed and tested a hydro turbine with no moving parts besides the rotor and at scale (1:3.5)
- First prototype deployed in Nissum Bredning in March 2003 for a 2-year real sea grid connected testing program. The 57 meter wide prototype is an exact replica of a 260 wide intended for 24kW/m sea states or a 1:4.5 in real sea with a power production of 20 kW

Device Manufacturer Criteria

Company Viability

The company has been financed and supported by a large consortium of companies, with significant contributions from Government sources and the European Unions 5th framework energy programme. Industrial collaborations and significant progress towards a full-scale demonstration makes this a viable and capable organization.

Local Manufacturing

All structural elements could be manufactured locally in suitable shipyards or purpose built construction yards. Special components such as turbines could be licensed to US manufacturing companies.

Licensing

The company is willing to license the technology under acceptable terms.

References

1. J. Falnes, Department of Physics, NTNU, Principles for Capture of Energy from Ocean Waves http://www.phys.ntnu.no/instdef/grupper/miljofysikk/bolgeforsk/phcontrl.pdf

2. Utilization of Ocean Waves – Wave to Energy Conversion, Michael E. McCormick, Hardcover, January 1987 ISBN: 0872626245

3. Wave Energy, American Society of Mechanical Engineers, ISBN: 0852987889

4 . Wave Energy Conversion, John Brooke, Hardcover, September 2003, ISBN: 0080442129

5. Ocean Waves and Oscillatory Systems: Linear Interactions Including Wave Energy Extraction, Johannes Falnes, Hardcover, March 2002, ISBN: 0521782112

6. E2I EPRI WP US 002 "Cost of Electricity Assessment Methodology for Offshore Wave Energy Power Plants" Mirko Previsic and Roger Bedard, March 2004

7. E2I EPRI WP US 001 "Guidelines for Preliminary Estimation of Power production by Offshore Wave Energy Conversion Devices" George Hagerman and Roger Bedard, December, 2003

8. E2I EPRI Wave Energy Conversion (WEC) Manufacturer Request for Information (RFI) dated December 2003

9. RFI Response from AquaEnergy

10. RFI Response from Energtech

11. RFI Response from Independent Natural Resources Inc

12. RFI Response from Ocean Power Delivery

13. RFI Response from OreCON

14. RFI Response from Team Work

15. RFI Response from Wave Bob

16. RFI Response from Wave Dragon

17. E2I EPRI Internal Worksheet – AquaEnergy "AquaBuOY" Performance Estimate

18. E2I EPRI Internal Worksheet – Independent Natural Resources Inc. "SeaDog" Performance Estimate

19. E2I EPRI Internal Worksheet – Ocean Power Delivery "Pelamis" Performance Estimate

20. E2I EPRI Internal Worksheet – OreCON "MRC1000" Performance Estimate

21. E2I EPRI Internal Worksheet – TeamWork "Wave Swing" Performance Estimate

22. E2I EPRI Internal Worksheet – "WaveBob" Performance Estimate