Appendix 2.6

Task 2.6: Mechanical Freeze/Thaw and Freeze

Concentration of Water and Wastewater Residuals

Submitted by:

Electric Power Research Institute

Palo Alto, California

Submitted to:

California Energy Commission

Sacramento, California

January 2002

DISCLAIMER OF WARRANTIES AND LIMITATION OF LIABILITIES

THIS REPORT WAS PREPARED BY THE ORGANIZATION(S) NAMED BELOW AS AN ACCOUNT OF WORK SPONSORED OR COSPONSORED BY THE ELECTRIC POWER RESEARCH INSTITUTE, INC. (EPRI). NEITHER EPRI, ANY MEMBER OF EPRI, ANY COSPONSOR, THE ORGANIZATION(S) NAMED BELOW, NOR ANY PERSON ACTING ON BEHALF OF ANY OF THEM:

(A) MAKES ANY WARRANTY OR REPRESENTATION WHATSOEVER, EXPRESS OR IMPLIED, (I) WITH RESPECT TO THE USE OF ANY INFORMATION, APPARATUS, METHOD, PROCESS, OR SIMILAR ITEM DISCLOSED IN THIS REPORT, INCLUDING MERCHANTABILITY AND FITNESS FOR A PARTICULAR PURPOSE, OR (II) THAT SUCH USE DOES NOT INFRINGE ON OR INTERFERE WITH PRIVATELY OWNED RIGHTS, INCLUDING ANY PARTY'S INTELLECTUAL PROPERTY, OR (III) THAT THIS REPORT IS SUITABLE TO ANY PARTICULAR USER'S CORCUMSTANCE; OR

(B) ASSUMES RESPONSIBILITY FOR ANY DAMAGES OR OTHER LIABILITY WHATSOEVER (INCLUDING ANY CONSEQUENTIAL DAMAGES, EVEN IF EPRI OR ANY EPRI REPRESENTATIVE HAS BEEN ADVISED OF THE POSSIBILITY OF SUCH DAMAGES) RESULTING FROM YOUR SELECTION OR USE OF THIS REPORT OR ANY INFORMATION, APPARATUS, METHOD, PROCESS, OR SIMILAR ITEM DISCLOSED IN THIS REPORT.

ORGAINIZATION(S) THAT PREPARED THIS REPORT

Black and Vectch Corporation

Legal Notice

This report was prepared as a result of work sponsored by the California Energy Commission. It does not necessarily represent the views of the Commission, its employees, or the State of California. The Commission, the State of California, its employees, contractors, and subcontractors make no warranty, express or implied, and assume no legal liability for the information in this report; nor does any party represent that the use of this information will not infringe upon privately owned rights. This report has not been approved or disapproved by the Commission nor has the Commission passed upon the adequacy of this information in this report.

CITATIONS

This report was prepared by

Black & Veatch Corporation
8400 Ward Parkway
Kansas City, MO 64114

G. Hunter

R. Hayslett

This report describes research by EPRI, Southern California Edison, and the California Energy Commission.

This report is a corporate document and should be cited in literature in the following manner:

Mechanical Freeze/Thaw and Freeze Concentration of Water and Wastewater Residuals: Status Report, EPRI, Palo Alto, CA: 2001. WO-671002

ACKNOWLEDGEMENTS

The authors of this report would like to acknowledge the advice and assistance of the following persons:

Ray Ehrhard, John Murphy, and Kim Shilling of the EPRI Community Environmental Center at Washington University in St. Louis, Missouri.

David Perkins, technical expert of the EPRI Community Environmental Center.

Lory Larson, Southern California Edison

Frank Scherer of BIOFREEZE™.

The staff of Orange County Water District.

And special recognition to Howard Hunt whose vision and motivation led to the evolution and innovation of freeze/thaw technology

PREFACE

This report analyzes the use of mechanical freeze/thaw and freeze concentration processes for reducing the volume of residuals at water and wastewater treatment plants.

Background

To remove particulates from raw water at water treatment plants, chemicals such as alum, ferric chloride, and lime are added to the liquid stream. Chemicals combine with the solids in the raw water to form larger particles that can be settled out of the water. The settled particles become water residuals when they are removed from the process. Presently, these residuals are often disposed of in receiving streams or in sanitary sewers. However, new environmental regulations may require alternative methods of disposal. One way to lower the cost of residual disposal is to reduce its volume. Freeze/Thaw is an effective means to remove water from water residuals, much more so than conventional dewatering, but is it economical? This study looks at using a refrigeration system with built-in energy recovery to lower the overall cost of the freeze-thaw process.

For the vast majority of wastewater treatment plants, biological treatment, either in the form of activated sludge or trickling filters, is used. In the biological treatment process, not only are particulates in the wastewater removed for disposal, but also excess biological growth. This wastewater residual can then be fed to anaerobic digesters for stabilization. After digestion, many plants then dispose of this residual by land application or in landfills. The freeze-thaw method is evaluated during this study to assess its conditioning of the biological residual before digestion.

Another process that is gaining popularity throughout the water and wastewater industries is membrane technology. Membranes effectively treat water to levels that previously were almost unattainable; however, like any treatment process, it generates a waste that must be handled. This waste consists of a concentrated solution of dissolved particles that are referred to as brine. Presently, disposal of this waste can be a costly proposition depending on the location of the treatment plant. Freeze concentration, a process that has been used for years in the food processing industry, could free water from the brine solution and reduce the volume for disposal. Using the same refrigeration system constructed for the freeze/thaw studies, freeze concentration is examined during these tests for brine generated from membrane (i.e. reverse osmosis, microfiltration, and ultrafiltration) technologies.

Objectives

The purposes of this study were to:

- Evaluate the economics of using the BIOFREEZE™ unit for conditioning water treatment plant residuals.
- Determine if biological wastewater residuals can obtain the same separation rate as inorganic water treatment plant residuals.
- Evaluate the economics of using BIOFREEZE™ for conditioning wastewater residuals.
- Evaluate freeze concentration of reverse osmosis brine to determine if separation of salts can be achieved.

Approach

A pilot-scale demonstrator unit was constructed for this project. This unit was a batch freezer with two compartments that could simultaneously freeze and thaw. This approach allowed the demonstrator to maximize energy efficiency by recovering energy. By recirculating the water in a channel during the freezing process (called *dynamic freezing*), this refrigeration system is used to freeze a concentrated brine solution.

Conclusions

At the end of the study period, 15 test runs have been completed using the demonstrator unit and the following information have been reported:

- Mechanical F/T is extremely effective at reducing inorganic residual volumes, achieving up to a 94% reduction.
- Mechanical F/T of the wastewater biological residuals collected for this study did not produce the high level of separation achieved with the inorganic sludges.
- FC of RO brine did produce a concentrating effect, and reduce the volume of concentrated brine for disposal. Results of the testing did not appear to achieve low concentrations of TDS in the ice (average ice TDS, 3260 mg/L; expected ice TDS, 500 mg/L).
- Most of the power data collected during this study was inaccurate due to the BIOFREEZE™ unit not being insulated. The two trials that were conducted with the demonstrator insulated resulted in power consumption of 118.7 and 129.5 kWh/ton of frozen residual, which is very similar to data observed by EPRI.

The economic analysis of the freeze/thaw method appeared to be cost competitive with conventional treatment of water residuals.

EPRI Perspective

EPRI's Municipal Water and Wastewater Program was created to help member utilities address the energy needs of the more than 60,000 water systems and 15,000 wastewater systems in the United States. Theses facilities are among the country's largest energy consumers, requiring an estimated 75 billion kWh nationally, about 3% of the annual U.S. electricity use.

Interest Categories

E3003 Waste & Water Management

L3004 Municipal Water & Wastewater

CONTENTS

Disclaimer and Ordering Information	ii
Citations	iii
Acknowledgements	iv
Preface	v
Conclusions	vi
List of Figures	ix
List of Tables	x
Executive Summary	xi
Project Abstract	xv
INTRODUCTION	1
Study Objectives	1
Overview of Residuals Treatment Processes	2
Overview of Brine Processes	4
Literature Review of Freeze/Thaw Processes	6
Literature Review of Freeze Concentration Processes	9
PIER FREEZE PROCESS DEMONSTRATION PROJECT	12
Concept of Mechanical Freezing	12
Project Goals and Objectives	12
Project Activities	12
Description of Mechanical Freeze Demonstration Equipment	13
FINDINGS OF DEMONSTRATION STUDIES	17
Materials Tested	17
Commercialization Potential	23
Capital Investment	23
Residuals Freeze/Thaw Freezing Load	23
Plant Cost	24
F/T Thickening Technology and Costs	25
Energy Cost	26
Maintenance Costs	28
Case Study	28
Recommendations	32
Benefits to California	33
ABBREVIATIONS	34
GLOSSARY	35
REFERENCES	37

LIST OF FIGURES

Figure 1-1 A Typical Water Treatment Process 2
Figure 1-2 A Typical Wastewater Treatment Process 2
Figure 2-1 BIOFREEZE™ Being Unloaded 14
Figure 2-2 Schematic Drawing of the Refrigeration Cycle 15

LIST OF TABLES

Table 3-1 Freeze/Thaw Testing Results for Alum Sludge 18
Table 3-2 Freeze/Thaw Testing Results for Ferric Chloride Sludge 19
Table 3-3 Biological Sludge Freeze/Thaw Results 20
Table 3-4 Brine Freeze Concentration Results 21
Table 3-5 Power Consumption 22
Table 4-1 Freezer Sizing 24
Table 4-2 Estimated Cost For Freeze Systems* 25
Table 4-3 Thickening Equipment Cost* 26
Table 4-4 Energy Consumption for Block Freezer 27
Table 4-5 Energy Consumption for BIOFREEZE™ 27
Table 4-6 Maintenance Costs 28
Table 4-7 Construction Cost Comparison of Alternatives 30
Table 4-8 Annual Operation and Maintenance Costs 31
Table 4-9 Present Worth Analysis 32

EXECUTIVE SUMMARY

Freezing and thawing (F/T) as a method of conditioning residuals and improving the dewaterability has been studied for many years. Alum residuals produced at water treatment plants contain a large proportion of hydrated water that impedes dewatering of the residuals by mechanical equipment. In addition to alum sludges, ferric chloride sludges from water treatment can also be F/T conditioned to improve their dewaterability. Biological wastewater sludges also contain large amounts of water that can be difficult to remove before disposal.

Until recently, many water treatment plants were able to discharge their treatment process residuals back into a receiving stream or to a sanitary sewer. However, new environmental regulations may force communities to find alternative methods of disposal. For such alternative practices to be cost-effective it is often necessary that the residuals be thickened or even dewatered before disposal. Residuals produced by conditioning with alum or ferric chloride are difficult to thicken and dewater. The F/T conditioning process can be used to enhance the thickening and dewatering properties of alum residuals, as well as those of wastewater residuals or of many types of industrial waste residuals.

The wastewater industry for years has been disposing of digested biological residuals in landfills and, in some regions, on farmlands. However, land application of biological residuals is giving rise to new questions about safety while landfill tipping fees have been steadily rising. In response to these factors, F/T conditioning is being examined to increase dewaterability of the residuals that would in turn reduce the volume of residuals to be disposed of by landfilling.

Freeze concentration (FC) is a new process that has not yet found an application for the water and wastewater industry, but has been used extensively in the food and chemical industries. However, with the growing number of water treatment as well as tertiary wastewater treatment plants using membrane processes that produce brine, freeze concentration could provide a cost-effective method of reducing the brine volume.

This project status report is being prepared to summarize the work that has been completed by the Electric Power Research Institute-Municipal Water and Wastewater (EPRI-MWW) program.

Literature Review

According to literature, the F/T process can improve the dewaterability of hard-to-dewater residuals. The most dramatic results of F/T conditioning have been reported with inorganic residuals such as those generated by using alum in water treatment. Literature sources consistently indicate that solids concentration, freezing rate, and duration of freezing (curing time) are the most important variables to consider in optimizing the F/T process. Solids

concentration is important in determining the size of the freezing equipment. Thickening the sludge from 1 percent to 2 percent before treatment can result in savings up to 50 percent in both energy consumption and the size of the conditioning facility.

Since the 1950's, FC has been researched for desalination of seawater and for use by the petroleum and food processing industries. For desalination, FC has a product water with a total dissolved solids (TDS) concentration of 50 to 100 mg/L. Literature sources indicate that the FC process can be economical method of concentrating solids in solution.

Project Goals

In order to assist utilities with the conditioning of residuals, EPRI-MWW has implemented a study of the F/T and FC processes.

The results of previous EPRI-MWW studies indicate that power requirements and construction costs are important factors in selecting this technology. For this study, a mobile F/T demonstrator was constructed by SIR Worldwide, LLC (SIR) using its BIOFREEZE™ technology. Pilot tests using the F/T demonstrator are designed to accomplish the following:

- Verify the concept of mechanical F/T process.
- Determine the operational requirements of the process.
- Assess the dewaterability of the F/T conditioned solids.
- Develop a base of operating information for full-scale design.
- Measure energy consumption.
- Determine the feasibility of using the FC technology on brine.

Description of Demonstrator Unit

The demonstration unit for this study was based on SIR-patented technology, BIOFREEZE™, which is an innovative F/T technology used for conditioning residuals from water treatment, wastewater treatment, and industrial waste treatment facilities.

The BIOFREEZE™ demonstration unit fits into a standard pickup truck bed, and the equipment on it can be divided into the following four systems: residuals channel freezer, refrigeration compressor system, refrigerant circulation system, and a gate-and-harvester system for removing the conditioned materials. The unique design of the BIOFREEZE™ allows the residuals to be both frozen and thawed in the same channels, thereby reducing the footprint and the complexity of the system.

The pilot demonstration system is designed to produce up to twelve batches of ice every 24 hours. The channel plate freezer can hold up to 17.5 gallons of residuals per batch.

Testing Results

To date, the BIOFREEZE™ demonstration unit has completed 15 test runs with the following results:

- Mechanical F/T is capable of reducing inorganic sludge volumes up to a 94 percent.
- Mechanical F/T did not reduce the volume of biological sludges.
- FC did have a concentrating effect on reverse osmosis (RO) brine, and reduced the volume of concentrated brine for disposal; however, it was not as effective in reducing the TDS concentration of the frozen phase as had been expected (average ice TDS, 3260 mg/L; expected ice TDS, 500 mg/L).
- Most of the power data collected was inaccurate because the BIOFREEZE™ unit was not insulated. For the two trials conducted with the insulated unit, power consumption was 118.7 and 129.5 kilowatt-hours per ton of residual frozen.

As indication by these results, each type of sludge has special characteristics. It is important to keep in mind that alum, ferric chloride, and biological sludges all respond to the F/T process differently. Alum residuals undergo the most remarkable reduction in volume, whereas the reduction in ferric chloride residuals is smaller, but nonetheless significant. Biological residuals did not have a reduction in volume after F/T conditioning, however previous research at Orange County Sanitation District (OCSD) had results showing F/T conditioning to be effective in reducing residual volume. Also, the OCSD research reported that F/T-conditioned biological sludge produced more methane gas in an anaerobic digester.

FC appears to be well-suited for dewatering brine solutions. The only other dewatering method, evaporation, uses more energy, which makes it less cost effective. The collected data for this research indicate that either the BIOFREEZE™ process was not well suited for this application or further research is needed on the BIOFREEZE™ process.

The power use data point to the importance of insulation on the demonstration unit. After insulation was installed, the power consumption was reduced by at least a factor of 2 and in some cases, 3. However, the power consumption of the unit was still higher than SIR had expected. The inefficiencies were a combination of the hermetic compressor, the ratio of exposed surfaces to product surfaces, and the small scale of the demonstrator. These inefficiencies are outlined in detail in Appendix A.

Economic Evaluation

An economic evaluation was completed to assess the relative economics of F/T with more conventional dewatering technologies. A present worth analysis was performed assuming a 10-year design life and 8.5 percent interest. The results of this analysis are shown in Table ES-1.

Table ES-1
Present Worth Analysis

	Alternative 1 Belt Filter Press and Disposal $	Alternative 2 Thickening, Block Freezer Conditioning, Belt Press, Dewatering and Disposal $	Alternative 3 Thickening, BIOFREEZE™ Conditioning, Belt Press Dewatering and Disposal $
Construction Cost	1,009,200	1,692,875	1,536,855
Present Worth of O&M 10 Years, 8.5 Interest	1,088,963	740,537	659,600
Total Present Worth	2,098,163	2,433,412	2,196,455

The results of the present worth analysis indicate that freeze/thaw will be cost competitive only if a thickening step is incorporated into the process. Freeze/thaw without preconditioning does not appear to be cost effective.

Future Research and Development Needs

Additional demonstration testing needs to be completed to verify the results of previous testing. The testing should concentrate on the thickening step to verify the assumptions used in this report.

The results of this round of testing confirm that F/T technology is effective in dewatering inorganic water treatment sludges. According to the present worth analysis, the BIOFREEZE™ energy recovery method appears to be similar to conventional disposal methods. Additional demonstration studies are required to verify the assumptions used in the analysis. Capital costs are a significant obstacle for application of F/T. It is recommended that additional freezing systems be evaluated to determine if the capital costs can be reduced.

For the biological sludges, the BIOFREEZE™ system appears to be able to provide substantial benefits to anaerobic digestion. Further testing needs to be completed to confirm that increased methane production can be achieved and to what extent dewaterability of the sludges can be expected. At larger wastewater plants that use cogeneration, it is possible that the potential increase in methane production could alone pay for the operating costs of the F/T system. It is recommended that EPRI pursue additional studies coupling F/T with anaerobic digestion.

Brine reject is a growing concern nationwide as RO treatment of potable water increases. Results achieved from this study on F/T of brine were inconclusive, however, previous work in this area appears promising. It is recommended that EPRI investigate developing the BIOFREEZE™ system operating parameters and/or other freeze concentration technologies in order to optimize the FC process.

PROJECT ABSTRACT

Freezing and thawing (F/T) is a method of conditioning residuals and improving the dewaterability of water treatment plant solids. Research has shown that freeze/thaw conditioning of residuals aids in the separation of the solids from water, reducing the volume of final material for disposal. Previous research has suggested that freeze/thaw conditioning may make sense, but only if power costs exceed $0.07/kWh and tipping fees for disposal of the sludge exceed $60/wet ton. Limited research has been conducted on freeze concentration of both wastewater biological sludges and reverse osmosis brine solutions. This study evaluates the use of an energy efficient mechanical freeze/thaw unit treating conventional water plant residuals, wastewater plant sludges, and brine produced from microfiltration RO reject.

The unique aspect of the BIOFREEZE™ demonstrator unit was its ability to recover the energy used for freezing the previous batch. This allows the unit to freeze one batch of residuals while simultaneously melting the other. The BIOFREEZE™ method used the previously frozen batch of residual to absorb energy from the condenser side of the refrigeration cycle, which in turn lowered the condenser temperature. This lowering of the condenser temperature allowed the compressor to complete the refrigeration cycle with less work energy, therefore reducing the electricity requirements of the BIOFREEZE™ by approximately 30 to 50 percent as compared to a conventional unit. Since the demonstration unit was sized to meet smaller quantity demands, thermal inefficiencies in the mechanical equipment did not allow a more accurate measurement for scaled up conditions. The demonstration unit average power usage of 124 kWh/ton of frozen product probably does not reflect the efficiency an actual BIOFREEZE™ unit. The inefficiencies of the demonstration unit's small scale have a large effect on the power consumption . Based on SIR experience, the power consumption should range between 24 and 40 kWh/ton

The following conclusions can be made as a result of this study:

- Mechanical F/T is extremely effective at reducing inorganic residual volumes, achieving up to a 94% reduction.
- Mechanical F/T of the wastewater biological residuals collected for this study did not produce the high level of separation achieved with the inorganic sludges. Additional studies should be undertaken with consideration of the facts listed in this report.
- FC of RO brine did produce a concentrating effect, and reduce the volume of concentrated brine for disposal. Results of the testing did not appear to achieve low concentrations of TDS in the ice (average ice TDS, 3260 mg/L; expected ice TDS, 500 mg/L).

The economic analysis of the freeze/thaw method appeared to be cost competitive with conventional treatment of water residuals.

INTRODUCTION

Study Objectives

Disposal of water and wastewater treatment residuals in California is becoming an important issue due to increasing landfill disposal costs. EPRI has indicated that residuals treatment can range from 20 to 40 percent of the total operating budgets of water and wastewater treatment facilities. Both municipal and industrial water and wastewater treatment facilities are looking at technologies to reduce the volume of residuals sent to disposal.

Use of brackish water and water reuse are becoming more prevalent in water-short areas, both in California, and other states. With increasing frequency, reverse osmosis (RO) is being used to improve the quality of brackish water or to make the quality of wastewater treatment plant effluent suitable for reuse. RO treatment generates residual brine that may be 20 to 50 percent of the input water volume and that can present difficult disposal challenges.

Mechanical freezing technologies may help water and wastewater treatment facilities reduce disposal costs for their residuals.

The major objectives of this mechanical freezing study are as follows:

- Demonstrate the use of Freeze/Thaw (F/T) on alum, ferric, and biological residuals.
- Demonstrate Freeze Concentration (FC) Technologies on RO brine.
- Evaluate and compare the disposal costs of residuals conditioned by either the F/T or FC process.

The demonstration study was conducted to verify the costs that had been developed by EPRI and by vendors. Equipment capital and operating costs were developed using information from major suppliers of treatment equipment and EPRI experience. The study also included a basic review of F/T and FC on residuals treatment processes and applicable literature.

Overview of Residuals Treatment Processes

Residuals are generated during the treatment of water and wastewater. During water treatment, particulates are removed from the raw water using chemicals (Figure 1-1). Common water treatment chemicals include alum, ferric chloride, ferrous sulfate, lime, and polymers. As the chemicals combine with solid particles in the water, residual material is formed. In many cases the residual products are easy to dewater and meet ultimate disposal requirements. This is, however, not true of alum residuals, which are difficult to dewater due to the hydrated water particles that are attached to the alum.

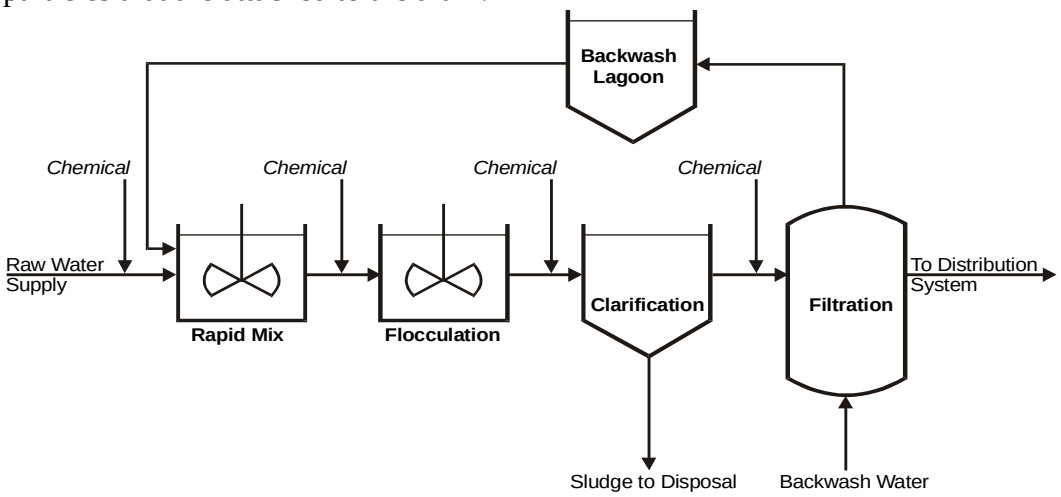

Figure 1-1 A Typical Water Treatment Process

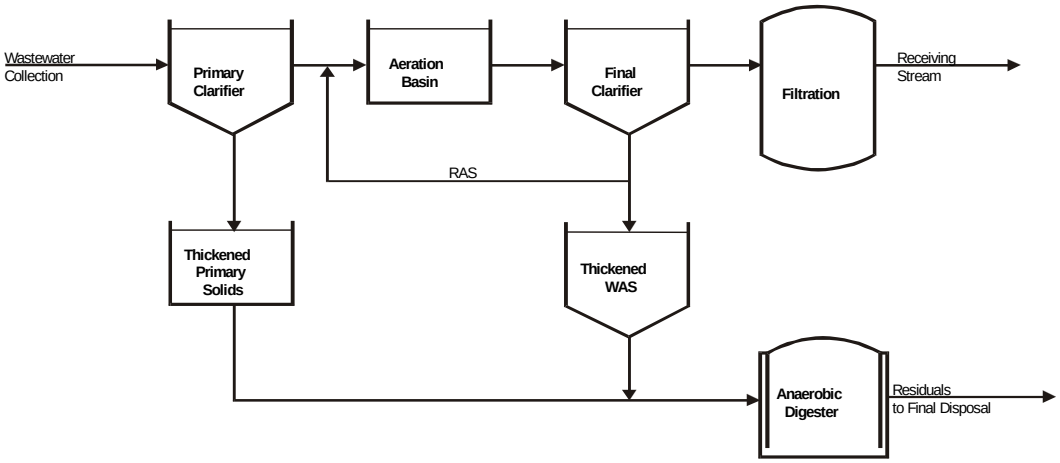

Figure 1-2 A Typical Wastewater Treatment Process

Wastewater residuals are generated in the clarification, or settling, process (primary solids) and in biological treatment (secondary solids). As shown on Figure 1-2, primary and secondary solids are stabilized by anaerobic digestion before dewatering and ultimate disposal.

Solids, whether generated in water or wastewater treatment, require additional processing before disposal. Conditioning, thickening, stabilization, and dewatering are types of processes that may be used to reduce the volume of solids to be transported for disposal.

Conditioning

EPRI has stated that conditioning involves the physical, chemical, and/or biological enhancement of a process to separate water from residuals or biosolids [1]. Most conditioning processes result in combining smaller particles into larger particles that can be more readily separated from water. There are many different types of conditioning processes. Typical examples include chemical addition, heat treatment, and natural or mechanical F/T.

Thickening

A residuals treatment process that produces a material with solids content less than 10 percent by weight is called thickening. EPRI has indicated that thickening is used primarily on wastewater biosolids and to a lesser extent on water treatment plant residuals[1]. In both water and wastewater facilities, thickening typically follows some form of conditioning.

Thickening may be done using such equipment as dissolved air flotation (DAF) units, gravity belt thickeners (GBT), rotary drum thickeners, and gravity thickeners.

Dewatering

Dewatering is the separation of water from solids to achieve a substantial reduction in volume and an increase in solids concentration. EPRI has defined dewatering as the removal of water from liquid residuals to obtain an end product of 10 to 40 percent total solids [1].

Typically, there are three types of dewatering processes: mechanical, natural, and thermal. Mechanical dewatering equipment includes screws, centrifuges, and belt presses; natural dewatering is usually accomplished in lagoons and on sludge drying beds.

Belt filters and plate and frame filter presses both operate by drawing the fluid to be dewatered through fabric. Belt filters utilize permeable belts to compress and shear the sludge to remove water. Plate and frame filter presses force the sludge into contact with a series of cloths that retain the solid matter while allowing the liquid filtrate to pass through them.

Lagooning is another popular dewatering method. It owes its popularity to its simplicity and relatively low cost. A lagoon is a basin into which raw sludge is deposited. The sludge is

dewatered naturally by evaporation induced by the sun and wind until it is free of moisture. The dry sludge is then removed and disposed of in a dedicated area or a sanitary landfill.

Sludge drying beds are similar to lagoons. A drying bed is built by layering sand. Sludge is placed on top of the sand in 8-12 inch layers and allowed to dry naturally. The sand acts as a sieve to strain the water away from the drying sludge.

Overview of Brine Processes

Population growth, with the resulting increase in water consumption, has led many utilities to less desirable raw water supplies. In the United States, especially in California, Florida, and the desert southwest, a growing number of utilities are using RO to treat brackish surface or ground water supplies.

In the RO process, feedwater is passed through a semi-permeable membrane, leaving the rejected salts and a portion of the feedwater as concentrate, or brine. The fraction of the feedwater that passes through the membrane, or the permeate, is known as the RO recovery. The recovery rate of RO systems rates vary greatly, depending on the composition of the source water, with typical brackish water recoveries ranging from 50 to 80 percent and seawater recoveries ranging from 30 to 50 percent [2].

The TDS removed from the permeate are concentrated in the brine; with the concentration determined by RO recovery percentage and the TDS concentration in the feedwater. RO treatment of brackish source waters that have TDS concentrations in the range of 1,500 to 8,000 mg/L can produce brine with TDS concentrations ranging from 7,500 to 40,000 mg/L [13]. RO treatment of seawater can result in brine TDS concentrations in the range of 48,000 to 69,000 mg/L [2]. In addition, specific constituents such as nitrate, radium, radon, arsenic, and heavy metals may occur in the source water in low concentrations without being considered problems; however, when concentrated in brine, these constituents may be harmful [2].

Disposal of the high TDS brine is becoming increasingly difficult. Brine has traditionally been disposed of by a number of methods: through a surface water outfall, discharged to a wastewater treatment plant, deep well injection, and lagoon evaporation. A brief summary of each method follows.

Surface Water Outfall

Discharge to the ocean or surface water has been one of the most economical methods of brine disposal. High TDS brines can affect the marine ecology [3]. Consequently, permitting an ocean discharge typically requires plume modeling to establish and evaluate the mixing zone. Ocean discharges must achieve a high level of dilution, a typical dilution factor of 35 to 40 to prevent adverse impact to marine life [3]. Obviously, ocean outfalls are not an option for inland RO facilities. Permitting discharge of the brine to fresh water is difficult. The discharger must show that the discharge meets the receiving stream's water quality requirements and toxicity

limits. While this has been successfully achieved in estuarine waters, it may be extremely difficult to meet these requirements for discharge to higher quality fresh water sources [4].

Discharge to Wastewater Treatment Plant

Another economical method of brine disposal has been discharge to a wastewater treatment plant or by mixing with wastewater effluent. The first of these methods can be used only where the membrane treatment plant is located on the wastewater collection system. Many domestic wastewater treatment plants do not allow such discharges because of the effects they have on the treatment processes and the plant effluent quality. High TDS brine can be toxic to the biological treatment process and the whole effluent testing (WET) analysis, depending on the concentration in the brine and its volume relative to the domestic portion of the influent. Where the treated wastewater is reclaimed for reuse, the additional salts can limit the types of reuse. In addition, if the wastewater plant already removes TDS or uses pretreatment programs to limit the TDS load to the plant, it is unlikely that it will accept the brine discharges. Blending the brine with the treatment plant effluent may be done only if the blended stream meets the wastewater plant's discharge permit requirements [5].

Deep Well Injection

Brine disposal by deep well injection has been practiced at many sites throughout southern Florida. It is typically an expensive disposal method because of the depth of the wells, which is often 2,000 to 3,000 feet. In addition, RO concentrate is classified by the EPA Underground Injection Control program as an industrial waste so injection wells must meet the requirements that apply to industrial effluent wells. Despite these drawbacks, deep well injection can be an attractive alternative under specific circumstances. To be suitable for brine injection, the receiving aquifer must (1) have high transmissivity and porosity and (2) be confined to prevent migration of the brine into underground sources of drinking water (USDW). For a 20 mgd membrane facility in southern Florida, a deep well injection system with a capital cost of $7 million (in year 2000 dollars) was shown to be more cost-effective than other available disposal options [6]. Brine disposal by deep well injection is often feasible near oilfields and is frequently used by the oil industry. Current development of an RO brine disposal system in central Kansas includes evaluation of deep well injection into the Arbuckle formation [5]. Due to its very specific geological requirements, however, deep well injection is not suitable for RO brine disposal in most locations.

Lagoon Evaporation

The final traditional RO brine disposal method is lagoon evaporation. Evaporation lagoons can be a cost-effective means of disposal in arid and semi-arid climates with high evaporation rates and low annual precipitation. The economics of lagoon disposal are highly dependent on the local land values and the net evaporation rate in the geographic region. In addition to those factors, most evaporation lagoons will require a membrane lining to prevent percolation and groundwater infiltration [7]. A recent evaluation of a proposed lagoon facility in Nevada

indicated a land requirement of approximately 400 acres to support a 5 mgd RO facility, lagoon construction costs of approximately $50 million, and annual operating costs of $500,000. These costs equate to a present worth of $56 million, excluding the cost of the land [5].

Literature Review of Freeze/Thaw Processes

Literature sources agree that the F/T process is highly effective for conditioning hard-to-dewater sludge, in particular, inorganic sludge such as alum sludge [8,9,10,11,12]. The literature indicates that freezing rate, solids content, and the length of time the sludge remains frozen (cure time), are the most important variables to consider when analyzing the F/T process [7,9,10,11].

Residuals can be described as being composed of several separate types of water: free water, interstitial water, surface water, and bound water [11]. Free water is water that surrounds the sludge floc, but does not move with the solids. Interstitial water is the water that "is trapped within the floc structure and travels with the floc or is held by capillary forces between the particles". Surface water is held on the surface of the floc and cannot be removed by mechanical means. Bound water is the water that is "bound to the particles and can be released only by thermochemical destruction of the particles."

When sludge freezes, the free water begins to freeze first. As the free water crystallizes, it seeks more free water to bind and grow with, while "pushing" the floc particles to the ice front. Once free water is frozen, the interstitial water is extracted by diffusion and added to the growing crystalline structure. Vesilind and Martel describe it best [11]:

> "If sludge with high suspended solids freezes, irregular ice needles are projected into the water. The needles seek available free water molecules for growth by projecting down into the sludge, bypassing the sludge solids. As the needles thrust into the sludge they push aside the solids, always seeking more free water molecules for continued growth."

As ice formation continues, sludge is rejected and concentrates ahead of the growing ice front. The growing, yet organized, ice crystalline structure cannot accept other atoms without intense local strain due to its symmetry. Therefore, at optimum freezing rates, almost every solute in the water is rejected by the growing ice front. Eventually, however, some of the sludge solids cannot be pushed in front of the ice and are trapped within the frozen section. If the temperature within the floc is low enough, the surface water freezes, allowing surface-attractive forces to work on the aggregate, moving individual particles into larger compact solids that have a greater size distribution and better dewaterability. Eventually, the entire mass is completely frozen.

Freeze rate is an important variable in the F/T conditioning process. An optimum freeze rate is defined as one that allows complete dewatering of the floc particles. Using optimum freeze rates, the area(s) closest to the freezing surface should be pure, clean water. Areas farthest away from the freezing surface should be the most concentrated. Logsdon and Edgerley report that a freezing speed of 2.4 inches per hour may be an effective rate of freezing [9]. Beyond this point the F/T process may not produce the beneficial effect on sludge dewaterability, because of entrapped floc particles. If the freezing rate is too high, the interstitial water particles do not move closer together, which is of no benefit to sludge dewaterability. Vesilind and Martel report

that if the water freezes too quickly, ice crystals push into the sludge and trap the particles without moving them into larger, more concentrated pockets [11]. Parker, Collins, and Dempsey agree, "Generally, an increase in freezing rate leads to poorer dewaterability [10]". Parker used microscopic studies to verify effects of freezing rates. His findings: migration of solids was evident. At lower freezing rates, the ice was clear where the floc particles were pushed ahead of the solidifying ice front. At high freezing rates the interface was dendritic and floc particles were entrapped as the front moved through the residuals.

Freezing rate and curing time are closely related. Curing time is defined as the time during which the ice block is kept under subfreezing conditions. Because of the design of the freezing vessel, areas of water closest to the freezing surface will freeze before areas farthest away. Curing time allows extra freezing time to ensure the ice that was frozen last has had enough time to completely dehydrate, and thus ensure optimum dewatering conditions. Recent work by Parker, Collins, and Dempsey agrees that the sludge dewaterability improves with the length of time the sludge is held under freezing conditions [10]. Their recommendation is to provide at least one-hour storage time at below-freezing temperatures.

Sludge solids concentration is also an important variable to consider when optimizing a F/T process because it plays a key role in determining a facility's ultimate size and operating costs. Thickening the sludge from 1 to 2 percent prior to treatment can decrease energy consumption and the size of the conditioning facility by 50 percent. Slib and Schlamm report that "the initial solids content of the sludge did not affect the effectiveness of the freeze-thaw, but for effective use of the freeze-thaw process, the sludge to be treated must be liquid. If the solids content in this particular case exceeds 10 percent, contact between the heat exchanger and the sludge is poor, which jeopardizes heat transfer [8]."

A recent AWWARF-funded study determined that F/T conditioning improved the dewaterability of water treatment sludges that used different coagulating/ flocculating chemicals (ferric chloride, alum, and polyaluminum chloride) [7]. Only slight variations in dewatering results were observed between the different sludges. Cost-optimum freezing conditions were determined to be an initial solids content of at least 10 percent by weight (achieved through thickening) and curing for six hours or longer (based on disposal fees >\$25/m^3 and energy costs <\$0.075/kWh). By thickening the sludges, energy requirements were reduced and dewaterability was improved, however it was suggested that the sludge might become overly thick, which would present pumping problems. Freezing in thin layers was recommended to minimize energy costs.

A potential benefit of pathogen deactivation is suggested for F/T conditioning of wastewater treatment plant sludges in research performed by Kato, Jenkins, et al. [13]. In experiments conducted with soils inoculated with *Cryptosporidium parvum* oocysts, 99 percent deactivation was achieved with one or two F/T cycles.

Natural Freezing of Residuals

The literature contains a few examples of water treatment facilities that have installed natural F/T facilities. Fitch and Elliot indicated that the feasibility of natural F/T was examined for a water treatment plant in New England [14]. Residuals from the treatment facility were dewatered in a lagoon system that had to be cleaned annually. It took two 3- person teams 12 weeks to clean the lagoon.

Bench-scale studies were conducted to develop design information for full-scale facilities. The results of the bench-scale studies indicated that sludge with an 8- percent solids concentration could be frozen and thawed to achieve a 25-percent solids concentration. A demonstration facility, consisting of 200 ft by 100 ft by 25 ft pilot beds, was constructed.

Results of the demonstration study indicated that one 2-person crew could remove the annual production of solids from the demonstration facility in four weeks. Therefore, the addition of the F/T process resulted in savings of both time and resources.

Shafer and Clark also reported on the use of natural freeze thaw in the conditioning of alum water treatment residuals [15]. Demonstration testing was completed using three 20 ft by 20 ft by 1.5 ft beds. Initial solids concentration of the residuals was 1 to 2 percent. Decanting, freezing/thawing, and air-drying resulted in a final product with a solids concentration of 56 percent.

Mechanical Freeze/Thaw

Research on the use of mechanical F/T to condition residuals has been ongoing for over 20 years. During the 1970's, Wilhelm and Silverblatt experimented with mechanical F/T on biological residuals using either glycol or brine as the refrigerant during the testing [16]. Results indicated that using mechanical F/T to condition biosolids with an initial solids concentration of 2 to 4 percent could result in a final solids concentration of 19 to 22 percent.

Research by Brown indicated that alum water treatment plant residuals with an initial solids concentration of 0.69 to 3.87 percent could be conditioned to more than 65 percent solids by mechanical F/T and one day of air drying [17].

The literature indicated two facilities that were currently using F/T to condition water treatment residuals [8]. The first was a 3.7 mgd water treatment facility in Germany. Actual results from this facility indicate that residuals with an initial solids concentration of 2 to 3 percent could be conditioned to 20 to 28 percent solids using F/T. The second facility, located in Holland, uses the F/T process to reduce the volume of iron hydroxide and powdered activated carbon residuals. The results from this facility are quite similar to those from the facility in Germany. Initial solids concentration of 1.9 to 11 percent would be increased to 31 to 36 percent after freezing/thawing and dewatering.

Summary of Freeze/Thaw Literature

- Research has confirmed that mechanical F/T is effective for dewatering sludges that are, by definition, difficult to dewater.
- Dewatering sludge before disposal reduces the volume of the material to be disposed of, and thus the disposal costs.
- Mechanical F/T has become increasingly attractive as a result of the demonstrated reduction of operating and capital costs.
- The freezing process permanently breaks hydrated bonds within sludge.
- Research has shown that floc particles are denser and more granular following freezing, which leads to improved dewaterability and fiterability.
- Literature sources agree that freezing rate and curing time are important variables affecting the success of F/T conditioning.

Literature Review of Freeze Concentration Processes

The use of freeze concentration (FC) in desalinization and in the petroleum product and food processing industries has been researched since the 1950s. FC has been used with significant commercial success in the food processing industry for concentration of juices and other food products [13]. In desalination of saltwater at 3.5 percent TDS, FC has achieved a product water with 50 to 100 mg/L TDS as sodium chloride, and with other impurities in the same ratio as the feed water [3].

The theoretical advantage of FC over the predominant competing concentration process of evaporation is based on energy requirements. To crystallize water, 143.5 Btu/lb is required, and to vaporize water, more than 1,000 Btu/lb is required. The energy inputs consist of (1) reversible thermal energy to achieve the process temperature and (2) latent heat to effect the phase change (from water to crystal or from water to vapor). Generally, the sum of these energy inputs is much less for FC than for evaporation [2].

Factors affecting the energy requirements of FC processes include the following [6]:

- Freezing temperature.
- Melting temperature of the pure crystal.
- Cooling water temperature.
- Heat of fusion of the crystal.
- Heat capacity ratio of the refrigerant.

Generally, if the freezing temperature is less than 50°F lower than the crystal melting temperature or the cooling water temperature, the energy consumption is less than 0.05 kWh per pound of crystal. Temperature differentials greater than 100°F result in energy consumption greater than 0.10 kWh per pound of crystal. A 100,000 gallon per day direct-contact sea water

desalting plant built for the US Office of Saline Water operated at 0.0053 kWh per pound of crystal, which corresponds to 45 kWh per 1000 gallons of desalinated product water [6].

The FC process takes advantage of the depression in freezing temperature that accompanies highly concentrated TDS solutions. Based on Raoult's Law, the depression in the freezing point is directly proportional to TDS concentration, with an approximately 2°C change in freezing point per mole of ions in solution. However, freezing does not occur at the same time throughout the solution. During the freezing process, portions of the solution with lower TDS concentrations freeze first -- at higher temperatures -- concentrating the TDS in the remaining liquid. Consequently, the freezing process can produce relatively pure water in the ice-slurry phase and concentrated brine in the unfrozen liquid phase. The process is controlled by measuring the conductivity in the high-TDS liquid. The freezing cycle is finished when the TDS have been sufficiently concentrated to meet discharge or reuse requirements of the low-TDS ice or slurry. The concentrated brine may require additional treatment – evaporation or mechanical separation – to further reduce residuals volume prior to disposal.

FC has not typically been used for RO brine separation. One of the challenges associated with brine separation is the presence of minerals, especially calcium, in the brine feed that can precipitate and foul the freezing surfaces or accumulate in the ice. Currently available FC equipment is not designed to accommodate the unique constraints associated with brine concentration. Pilot testing of freezing equipment with tube discharge has encountered clogging problems; however, demonstration testing indicates freezing equipment that has larger channel discharge, rather than the smaller tube discharge, appears promising [18]. Freezing tests using equipment with channel discharge have been performed on brackish water. In these tests, the freezing process was taken to completion, generating a block of ice in which the high-TDS ice was clearly visible so that the high-TDS ice could be sliced from the remaining block and disposed of [19]. In these tests, the TDS were concentrated from 700 mg/L in the feed to 3,500 mg/L in the concentrate [5].

The FC process can be divided into three stages: freezing/crystallization, separation and/or washing, and melting/product recovery.

Freezing/Crystallization

Freezing requires the use of either direct or indirect refrigeration. In the direct-contact mode, the refrigerant is mixed directly with the mother liquor. Direct-contact processes are less sensitive to scale formation and corrosion [3]. In direct-primary FC, the refrigerant is a component of the mother liquor that is extracted by vacuum, thereby removing heat from the mother liquor. Commercial development of this process has been impeded by the high volume of vapor that must be removed and the associated need for large compressors [2].

In secondary-refrigerant FC, a volatile liquid is injected into the mother liquor. The vapor pressure of the unit is kept below that of the refrigerant, that refrigerant evaporates and thereby cools the mother liquor. Butane and propane are examples of volatile liquids that can be used. This process can be constrained by accumulation of the refrigerant in the ice crystals degrading

the product purity. A variation of the secondary-refrigerant method is the clathrate direct-contact process, in which the temperature at which the crystals form is higher than the freezing point of water and can even be close to ambient temperature. In the clathrate variation, the refrigerant gas is actually incorporated into the ice crystal structure – forming clathrate crystals. When the ice is subsequently melted, the gas is recovered [2].

In indirect refrigeration processes, a heat exchanger wall separates the refrigerant from the mother liquor. In one major variant of the indirect process, the crystal deposits are removed by mechanical scrapers from the heat exchanger surfaces. These small crystals are then sent to a recrystallizer where larger crystals have already formed and where the temperature is slightly higher. At the higher temperatures in the recrystallizer, the arriving smaller crystals melt and then recrystallize on the larger crystals, which continue to grow. In the other major variant of the indirect process (the falling film seeded process), crystals form in the mother liquor rather than on the heat exchanger surfaces [2].

Multi-staging of the freezing step increases the capacity and reduces the energy consumption of FC by isolating the crystal production stage from the crystal separation stage. Multi-staging also increases the separation efficiency of subsequent wash columns (see below). Compared with single-stage systems, multi-stage systems energy requirements are lowered by 50 to 70 percent [2].

Separation and/or Washing

After the formation of ice crystals, subsequent water recovery steps are dependant on the specific FC technology employed and on the purity requirements for the recovered water. The ice crystals may be separated from the concentrated brine by a physical process (gravity separation) or mechanically (by screens or centrifugation). If low TDS water is required, it may be necessary to wash the ice crystals to reduce the amount of concentrated brine carried over on the crystals, especially in direct-contact processes.

Economics of FC

By using FC in place of evaporation and distillation in all feasible cases, an EPRI study indicated that savings up to $5.5 billion/year would be realized by the associated industries [4]. In the food industry, EPRI has found that replacing a 50,000 pound per day evaporator with a FC unit would result in energy savings of $100,000 per year [17].

PIER FREEZE PROCESS DEMONSTRATION PROJECT

Concept of Mechanical Freezing

EPRI has been examining the concept of mechanical F/T since 1990 and that of FC since the mid-1980s. The potential of mechanical freezing as a sludge conditioning or brine concentration process, was tested at demonstration scale in order to provide an estimate of operating costs of a full-scale facility, key to the feasibility of the process is energy. If the energy consumption of the freezing system is competitive, the entire process would be investigated further.

Project Goals and Objectives

In order to fully evaluate the concept of mechanical freezing, the following project goals and objectives were established:

- Demonstrate the use of F/T on alum, ferric, and biological residuals.
- Demonstrate FC technologies RO brine.
- Evaluate and compare the disposal costs of residuals conditioned using F/T versus conventional treatment.

Project Activities

Confirm Freeze Concepts

The literature reviews indicated that all previous research into F/T had been conducted at bench scale. Testing at larger scale needed to be completed to verify the bench-scale results. In 1997, EPRI assembled a demonstration F/T trailer to verify the results of previous research. While FC has been implemented at commercial scale for food and chemical processing, and to a limited extent for seawater desalination, it has never been piloted for concentrating RO brines.

Determine Operational and Energy Requirements

One of the major factors the water and wastewater industries have to consider when evaluating mechanical freezing technologies is operational requirements and costs. If operational requirements are too complex or costly, freezing technologies may find limited acceptance. Energy is by far the largest cost component. The demonstration testing should include accurate measurements of energy use.

Assess Dewatering Capability

Since F/T is only a conditioning process, in order to realize its full benefits, it must be followed by additional processes, such as dewatering by belt filter presses or sand-drying beds. Therefore, the demonstration testing utilized a pilot belt filter press to provide accurate final solids concentrations after dewatering.

Design Information

Critical to any demonstration project is the collection of data that can improve the design of full-scale facilities.

Description of Mechanical Freeze Demonstration Equipment

The mechanical freezing equipment used in this demonstration testing was a compact, small-scale commercial unit rented from SIR Worldwide, LLC (SIR). The unit's external dimensions were approximately 2.13-ft (0.65 m) wide by 7-ft (2.13 m) long by 3.17-ft (0.97 m) tall. The unit, which was delivered to the Orange County Water District (OCWD) by a standard pickup truck (Figure 2-1), contained two pairs of freeze/thaw chambers, with a volume of 18.75 gal (71 L) per chamber. Each chamber was subdivided into two sub-compartments by an interior refrigerated channel plate.

Figure 2-1 BIOFREEZE™ Being Unloaded

SIR noted the following constraints in using the small-scale commercial demonstration unit relative to an industrial-scale unit:

- The ratio of exposed copper and aluminum components to the total freezing surface area in the demonstration unit was orders of magnitude greater than it would be in an industrial-scale unit. These exposed components frosted up and thereby caused thermal inefficiencies during operation of the demonstration unit.
- In the demonstration unit, the ratio of refrigerated channel plates exposed to the product being frozen (sludge or brine) to the plates exposed to the external environment was 0.33, versus approximately 0.07 in an industrial unit. The greater proportion of refrigerated channel plates exposed to the external environment again contributed to thermal inefficiencies in the demonstration unit.
- The demonstration unit's hermetic compressor and temperature control system were inefficient compared to the open-drive compressors and specialized control systems of industrial-scale units. SIR estimated that the refrigeration output per unit of electrical energy of an industrial-scale unit would be nearly twice that of the demonstration unit.

Each freeze batch was processed according to the following steps: fill, freeze, and melt.

Fill Cycle

For both F/T of sludge and FC of brine, one of the two chambers of the demonstration unit was filled with the medium to be frozen. The residuals feed system consists of a 55-gallon drum containing the unconditioned residuals and an air diaphragm pump to fill the chambers. Before filling the chambers, the residuals were stirred to provide a uniform solids content in the feed.

Freeze/Melt Cycle

During the freeze cycle, refrigerant was compressed to a liquid in the condenser (see Figure 2-2). Before the liquefied refrigerant entered the channel plates of the demonstration unit, it was passed through an expansion valve, which caused its pressure to be lowered and to begin the evaporation process. As the refrigerant left the freezing plates, it returned to the suction side of the compressor for completion of the refrigeration cycle.

In F/T conditioning of sludge, only one of the two chambers was used for the freeze cycle while the sludge in the other chamber underwent the melt cycle. Each batch of sludge was completely frozen under static conditions. In FC of brine, the chambers were operated the same way, with one side freezing and the other side melting the brine; however, the freezing method for FC was different, as the brine was only partially frozen and continuously recirculated (a process referred to as *dynamic freezing*). At the end of the brine freezing cycle (as determined by a conductivity reading), the door of the chamber was opened to allow the concentrated brine to discharge into a collection vessel. The chamber was then closed again and was used to melt the frozen water while another FC batch was being partially frozen in the other chamber.

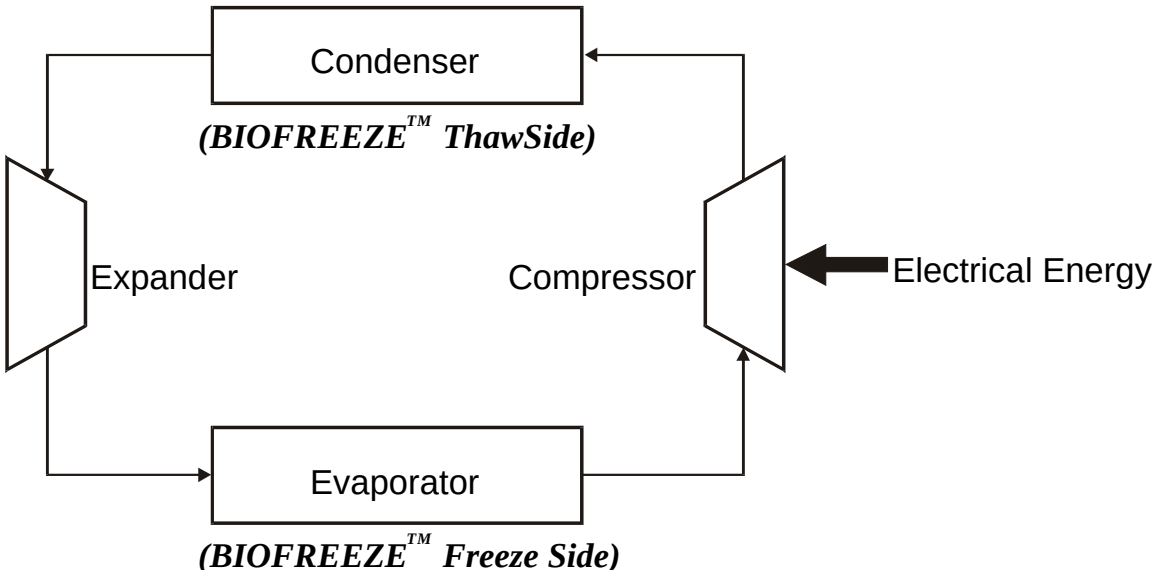

Figure 2-2 Schematic Drawing of the Refrigeration Cycle

Energy Recovery

The unique aspect of the BIOFREEZE™ demonstrator unit was its ability to recover the energy used for freezing the previous batch. This allows the unit to freeze one batch of residuals while simultaneously melting the other. Earlier attempts at freeze conditioning of residuals did not successfully utilize energy recovery, which in turn resulted in large energy consumption. The BIOFREEZE™ method used the previously frozen batch of residual to absorb energy from the condenser side of the refrigeration cycle, which in turn lowered the condenser temperature. This lowering of the condenser temperature allowed the compressor to complete the refrigeration

cycle with less work energy, therefore reducing the electricity requirements of the BIOFREEZE™ by approximately 30 to 50 percent as compared to a conventional unit.

FINDINGS OF DEMONSTRATION STUDIES

Materials Tested

The purpose of this study was to evaluate the effects of freeze-thaw technology on water and wastewater residuals. All testing took place at OCWD in Fountain Valley, CA, on specific residuals of the following types:

- Alum sludge from a water treatment plant.
- Ferric sludge from a water treatment plant.
- Thickened waste activated biological sludge (TWAS) from a wastewater treatment plant.
- Brine from microfilter (MF) and RO plants using a relatively new technology, FC.

Alum Sludge

Pilot testing of alum sludge was conducted with sludge produced at the Metropolitan Water District (MWD) in La Verne, CA, which treats an average daily flow of 150 mgd. Alum is the primary flocculant aid used at the plant with an average dose of 4 mg/L. Presently, the thickened sludge is discharged to the industrial sewer leading to the sanitation district for treatment.

Volume Reduction

The F/T conditioning did reduce sludge volume. The volume reduction was calculated by subtracting the volume of the sludge after F/T conditioning from the volume of sludge before F/T conditioning, then dividing that value by the volume of sludge before F/T conditioning. The sludge volume of the freeze/thaw conditioned sample after gravity thickening ranged from 74 to 94 percent, with an average of 84 percent. These values compared favorably to volume reduction results previously obtained by EPRI, which ranged from 63 to 91 percent [8].

Supernatant Quality

The solids concentration of the supernatant, collected after gravity thickening for 2 hours, ranged from 650 to 930 mg/L. These values appear to be much higher than the results previously reported by EPRI that ranged from 100 to 375 mg/L [2]. Supernatant quality probably was impacted by the rate at which the sludge was frozen.

Gravity-Thickened Solids Concentration

The solids content of the gravity-thickened sludge ranged from 11 to 12.5 percent. These results were similar to those experienced in previous EPRI studies, which ranged from 6 to 23 percent, with an average value of 12 percent.

Dewatering Using A Belt Filter Press

The solids concentration of gravity thickened solids dewatered on a pilot-scale belt filter press, ranged from 22.3 to 26 percent. These results are very similar to those previously obtained by EPRI, which ranged from 18 to 22.5 percent.

Table 3-1 Freeze/Thaw Testing Results for Alum Sludge

Test Run	1	2	3
Influent Concentration (% Solids)	0.7	2	3.3
Volume of Sample (gal)	10.4	12.7	10.4
Freezing Time (min)	150	195	180
Final Temperature (^{o}F)	32	2	22
Volume Reduction			
After Belt Filter Press (%)	97	91	87
Supernatant Quality (mg/L)	650	750	930
Gravity Thickened (% Solids)	11.1	11.4	12.5
Belt Filter Press (% Solids)	26	22.3	24.4

Ferric Chloride Sludge

Pilot testing of sludge conditioned with ferric chloride was conducted using sludge from MWD water treatment facility. The sludge is the product of a process that treats an average daily flow of 3 mgd, using ferric chloride at an average dose of 6 mg/L. The average solids concentration of the sludge after thickening was approximately 5 percent. Presently, the thickened sludge is discharged to the industrial sewer leading to the sanitation district for treatment.

Volume Reduction

The F/T conditioning did reduce residuals volume. The residuals volume of the freeze/thaw conditioned sample after gravity thickening was reduced by 45 to 81 percent. The range of values is due the variance in the influent solids concentration and the freezing temperature.

Supernatant Quality

The solids concentration of the supernatant, collected after gravity thickening, ranged from 930 to 1,070 mg/L.

Gravity-Thickened Solids Concentration

The solids concentration of the gravity-thickened sludge had a percent solids range of 10 to 16 percent.

Dewatering Using Belt Press

The solids concentration of sludge dewatered on a belt filter press ranged from 22 to 32 percent.

Table 3-2 Freeze/Thaw Testing Results for Ferric Chloride Sludge

Test Run	1	2	3
Influent Concentration (% Solids)	2.4	5.7	6.2
Volume of Sample (gal)	12.5	8.3	9.6
Freezing Time (min)	240	165	180
Final Temperature (^{o}F)	0	27	-11
Volume Reduction			
After Belt Filter Press (%)	93	74	79
Supernatant Quality (mg/L)	1,070	930	970
Gravity Thickened (% Solids)	12.1	10.3	15.9
Belt Filter Press (% Solids)	31.8	22.3	29.2

Biological Sludge

The biological sludge was F/T pilot tested using TWAS from the Orange County Sanitation District (OCSD) Plant No. 2 in Huntington Beach, CA that treats an average daily flow of 150 mgd. The DAF-thickened TWAS had a solids concentration of approximately 8 percent.

Presently, the TWAS undergoes anaerobic digestion and chemical addition for dewatering, before it is disposed of off-site by agricultural land application.

Unlike the inorganic sludges, the sludges subjected to F/T conditioning in this study were not reduced in volume. However, previous testing performed by OCSD resulted in volume reduction. In addition, when the F/T conditioned sludge was digested in OCSD pilot anaerobic digesters, the volume of methane per unit of feed increased by approximately 20 percent [20].

The results of this study were compared with the results reported by OCSD to determine the reasons for the large differences between the two sets of results. One major difference was that the freezing rate of the F/T demonstrator was unable to be controlled, therefore the freezing rate used in this study was more rapid than the rate of freezing in the OCSD study. Another possibility was that the TWAS sample needed to remain frozen for a length of time (referred to as *curing time*) to improve its dewatering and gas production characteristics. Based on the OCSD study results, it is recommended that further testing be performed on TWAS while adjusting the freezing rate and curing time.

Table 3-3 Biological Sludge Freeze/Thaw Results

Test Run	1	2	3
Influent Solids (% Solids)	3.4	3.4	3.44
Volume of Sample (gal)	13.75	10	10
Freezing Time (min)	170	180	165
Final Temperature (^{o}F)	-13	28	11.6
Supernatant Quality (% Solids)	2.79	3.24	3.37
Gravity Thickened Solids (% Solids)	3.23	3.44	3.43

Brine

The freeze concentration (FC) pilot testing at was done at the OCWD Water Factory 21 in Fountain Valley, CA, using brine solution from their MF research project which had a TDS concentration of approximately 5000 mg/L.

Product Ice Quality

The FC process produced ice with TDS concentrations which ranged between 2757 and 5100 mg/L, and averaged approximately 3800 mg/L. The parameters which varied for the FC testing were the recirculation rate and the freezing time. The recirculation rate proved to have some effect (especially when compared with the test run that included no recirculation) while the freezing time proved to have a considerable effect, with slower freezes resulting in TDS removal in the product ice.

Volume Reduction

For the FC test runs, the influent brine volume was reduced between 24 and 89.6 percent.

Table 3-4 Brine Freeze Concentration Results

Test Runs	1	2	3	4	5	6
Influent Brine TDS (mg/L)	5,290	5,290	5,374	5,260	5,330	6,580
Volume of Sample (gal)	15.8	14.2	6.7	6.7	15.6	5
Freezing Time (min)	173	205	175	58	88	39
Final Brine Temperature (^{o}F)	36	35	36	2	35	36
Recirculation Rate (gpm)	4	4	5.6	0	6.3	7.0
Surface Velocity (ft/min)	3.8	3.8	6	0	NR	NR
Volume of Brine (gal)	4.2	5	NR	0.7	5.6	3.8
Volume of Ice (gal)	11.6	9.2	NR	6	10	1.2
Volume Reduction in Brine for disposal (%)	73.4	64.8	NR	89.6	64.1	24
TDS Concentration of Effluent Brine (mg/L)	9,984	8,823	6,690	5,625	7,530	10,260
TDS Concentration of Ice (mg/L)	3,813	2,757	600	5,100	3,580	3,720

NR – Not Recorded

Power Requirements

A power meter was installed to measure the power use of the refrigeration compressor. Of the total of 15 trials run, these seven were monitored for power consumption. Power consumption for these test runs ranged between 3.3 and 15.1 kWh. This variance is attributed to the varying volumes of sludge used in the test unit.

A more accurate measure of power efficiency is the power consumption per ton of product frozen. This measurement varied between 118.7 and 393.6 kWh per ton. Since during the first five trials the test unit was not insulated, these trials do not reflect its true power efficiency. During the last two trials, the unit was insulated, and comparison of the average of the last two with the average of the first five trials showed the insulated unit to be operating 2.6 times as efficiently as the unit without insulation.

However, even the average of 124 kWh/ton of frozen product probably does not reflect the efficiency an actual BIOFREEZE™ unit. The inefficiencies of the demonstration unit's small scale have a large effect on the power consumption [Appendix A]. Based on SIR experience, the power consumption should range between 24 and 40 kWh/ton. A full-scale demonstration needs to be examined to confirm their power consumption estimate.

Table 3-5 Power Consumption

Test Run	1	2	3	4	5	6	7
Length of Freeze (min)	164	164	179	173	205	58	88
Energy Used (kWh)	11.8	12.6	12.3	11.7	15.1	3.3	5.4
Volume of Ice (gal)	10.4	7.9	9.2	11.7	9.2	6.7	10
Estimated Energy Used (kWh/ton)	270.3	381.4	321.7	239.8	393.6	118.7	129.5

* - Unit was insulated

COMMERSIALIZATION POTENTIAL

Capital Investment

Preliminary engineering of residuals F/T plants dictates that the complete systems can be broken down into relatively standard and sometimes modular components. The plant systems proposed herein are basically divided into the following subsections:

- Raw Residuals Thickening
- Residuals Feed Handling and Filling Systems
- Residuals Freezing and Refrigeration Systems
- Product Ice Handling Systems
- Product Ice Melting, Heat Recovery, and Primary Separation Systems
- Final Residuals Product Separation

For FC plants, all of the subsections are the same except for the subsection on raw residuals thickening, which is eliminated.

Residuals Freeze/Thaw Freezing Load

The F/T process design and costing parameters are based on the quantity of residuals that must be frozen in each freezer during each freezing cycle. Formal industrial refrigeration design and evaluation of this type is based on tons of ice (2,000 pounds per ton) which must be produced during each 24-hour cycle. Residuals are usually characterized in plant operations in terms of gallons at a particular level of total solids (expressed as percentage). Since the freezing process is driven by the quantity of ice (by weight) to be produced, plant sizing is based on residuals volume as if it were water to be frozen. Actual liquid residuals are heavier than water because of their solids content. However, the weight of a comparable volume of water is used as the design standard.

Table 4-1 Freezer Sizing

Residuals Feed gpd	Ice Production Tons/Day	Residual Solids Concentration Range 3% Solids lb/day	8% Solids lb/day
2,500 GALLONS	10	600	1,600
5,000	20	1,200	3,200
7,500	30	1,800	4,800
10,000	40	2,400	6,400
15,000	60	3,600	9.600
20,000	80	4,800	12,800
25,000	100	6,000	16,000
30,000	120	7,200	19,200
35,000	140	8,400	22,400
40,000	160	9,600	25,600

Plant Cost

The total installed cost of a residuals plant is a direct function of the amount of ice produced each day. These costs are based on the use of modular equipment for vertical plate block freezers (11 tons of ice per day) on a repetitive cycle of approximately seven 1.6 ton batches per day. The BIOFREEZE™ costs are for individually customized refrigeration systems that would fit on a 40 foot truck bed. Adjusting the number of freezing plates in the freezer can accommodate intermediate freezer sizes. Refrigeration systems use ammonia as the refrigerant for the block freezers; ammonia or ammonia-equivalent is the refrigerant for the BIOFREEZE™.

Table 4-2 Estimated Cost For Freeze Systems*

Residuals Volume gpd	Number of Block Freezers	Ice Production Tons/Day	Pounds (1) Solids @ 3% (lbs)	Vertical Plate Block Freezer Installed Cost (2) $	BIOFREEZE™ Installed Cost (2) $
2,500	1	10	600	390,000	233,000
5,000	2	20	1200	570,000	349,000
7,500	3	30	1800	720,000	441,000
10,000	4	40	2400	890,000	523,000
15,000	6	60	3600	1,160,000	630,000
20,000	8	80	4800	1,400,000	737,000
25,000	10	100	6000	1,690,000	887,000
30,000	12	120	7200	2,025,000	1,031,000
35,000	14	140	8400	2,380,000	1,172,000
40,000	16	160	9600	2,650,000	1,310,000

* - Excluding the cost of building the final separation equipment.

(1) – Dry solids (pounds) calculated as tons ice x 3%. Greater quantities of solids at the same ice production rate @ 6% & 8% TS.

(2) – Estimated installed cost not including thickening equipment.

F/T Thickening Technology and Costs

The economic advantages of freeze/thaw conditioning for water plant residuals are most attractive at slightly elevated concentrations of feed solids. Most water treatment residuals are generated at a solids concentration of 1 percent or less and are thickened to 2 or 3 percent solids by a simple gravity thickening. While feed materials of approximately 3 percent concentration respond very well to freeze/thaw conditioning, the economic advantage of the process is affected by the large volumes of water to be frozen. Consequently, thickening of feed streams with 3 percent or lower solids content to between 6 and 9 percent solids offers distinct economic advantages.

Relatively simple thickening technology with or without moderate doses of polymer or other coagulant aids can efficiently and economically raise feed concentrations to the 6 to 9 percent range. F/T conditioning at this concentration yields excellent results at a generally acceptable cost.

Table 4-3 Thickening Equipment Cost*

Maximum Dilute Feed Rate gpm (gpd)	Intermediate Concentration Product (1/3 x Feed) gpd	Installed Cost $
25 (36,000)	12,000	$70,000
50 (72,000)	24,000	$95,000
100 (144,000)	48,000	$140,000

* – Thickeners can be operated at a feed turndown ratio of approx. 5:1; e.g. – 25 gpm system can operate at –5 gpm feed rate.

Energy Cost

Operation and Maintenance Cost

Freezing of residuals involves significant energy input. This economic analysis is based on observation of freezing demonstrations and industry experience with ice-making systems.

The basic parameters for energy evaluation are the number of kilowatt-hours required to freeze 1 ton of residuals and the local cost of energy in cents per kilowatt-hour. This evaluation is based on an energy consumption rate of 24 kWh per ton of ice for the BIOFREEZE™ and 80 kWh per ton of ice for the block freezer. The cost of the electricity is estimated at a unit cost of 7 cents per kWh, and this equates to a cost of $1.68 per ton of ice produced by the BIOFREEZE™ process and $5.60 per ton by the block freezer. Additional energy consuming components (recirculating and refilling pumps, crushing equipment, etc.) are included in the overall energy factor for the block system, but they have not been considered for the BIOFREEZE™.

Table 4-4 Energy Consumption for Block Freezer

Feed Volume gpd	Ice Produced tons/day	Energy Consumption kWh/d	Unit Energy kWh / 1,000 gal	Energy Cost $ / 1,000 gal $0.07/kWh
2,500	10	800		
5,000	20	1,600		
7,500	30	2,400		
10,000	40	3,200	320 kWh	$22.40
15,000	60	4,800	Per 1,000	Per 1,000
20,000	80	6,400	Gallons	Gallons
25,000	100	8,000		
30,000	120	9,600		
35,000	140	11,200		
40,000	160	12,800		

Table 4-5 Energy Consumption for BIOFREEZE™

Feed Volume gpd	Ice Produced tons/day	Energy Consumption kWh/d	Unit Energy kWh / 1,000 gal	Energy Cost $ / 1,000 gal $0.07/kWh
2,500	10	240		
5,000	20	480		
7,500	30	720		
10,000	40	960	96 kWh	$6.72
15,000	60	1,440	Per 1,000	Per 1,000
20,000	80	1,920	Gallons	Gallons
25,000	100	2400		
30,000	120	2,880		
35,000	140	3,360		
40,000	160	3,840		

Maintenance Costs

Properly maintained residuals freezing and refrigeration systems can be expected to provide many more years of service than the typical 10-year period assumed for economic evaluation. Frequently, annual maintenance costs are estimated as a percentage of total plant equipment cost, which has generally proven to be realistic and reasonable values.

Table 4-6 Maintenance Costs

Residuals Freezing Capacity tons/day	Vertical Plate Block Freezer Annual Maintenance Costs $	BIOFREEZE™ Annual Maintenance Costs $
10	10,000	6,000
20	16,000	10,000
30	20,000	12,000
40	24,000	14,000
60	28,000	17,000
80	32,000	20,000
100	39,000	24,000
120	49,000	28,000
140	54,000	32,000
160	64,000	35,000

Case Study

In order to evaluate the economics of a freeze/thaw system, the following case study was developed.

The water treatment plant is a conventional surface water treatment facility with a permitted capacity of 24 mgd. The treatment process consists of rapid mixing, flocculation, sedimentation, filtration, and disinfection. Alum and carbon are added to the raw water for coagulation and adsorption of taste and odor causing compounds.

Residuals are collected from the sedimentation basins and conveyed to batch operated gravity thickeners. The residuals are thickened to a solids concentration of 1 to 6 percent with an average of 3 percent. Sludge volumes range from 168,000 to 486,000 gallons per month, with an average of 312,300 gallons per month.

Currently, thickened residuals are trucked to a landfill for ultimate disposal. Tipping fee at the landfill is $80/wet ton.

Three alternatives were developed for the management of the water treatment residuals: installation of a belt filter press, a block mechanical freeze/thaw system with a belt filter press, and a BIOFREEZE™ mechanical freeze/thaw system with a belt filter press.

Alternative 1 - Belt Filter Press

Under this alternative, thickened solids would be pumped to a belt filter press for dewatering. Facilities would be provided to add polymer to the residuals ahead of the belt press. Dewatered cake would be conveyed to a covered truck loading station.

Belt press equipment, polymer feed equipment, and controls would be installed in a 45-ft by 45-ft building attached to the covered truck loading station.

Alternative 2 - Freeze/Thaw Using Vertical Plate Block Freezers with Thickening

Under this alternative, solids would be pumped to a thickening unit for thickening. The thickened solids would be pumped to the freezer and controls would be installed for filling the freezer automatically. An ammonia refrigeration system would be provided for freezing the solids. Heat recovery would be provided to reduce energy use. After the freezing process, the block of frozen residuals would be put through an ice crusher followed by primary separation equipment. This equipment would be used for the initial separation of the conditioned solids from the liquid. The solids would flow by gravity to a belt filter press for dewatering. The dewatered cake would be conveyed to a covered truck loading station.

The equipment for this alternative would be installed in a two-story building. Freezing equipment would be installed on the second floor and the belt press equipment on the first floor.

Alternative 3 – Freeze/Thaw Using BIOFREEZE™ with Thickening

Under this alternative, solids would be pumped to a thickening unit for thickening. The preconditioned solids would be pumped to the BIOFREEZE™ and controls would be installed for filling the freezer automatically. A refrigeration system would be provided for freezing the solids. An ice crusher will not be needed for in the BIOFREEZE™ process since the thawing of the frozen residuals takes place in the same channels as they were frozen in. Primary separation equipment would be used for initial separation of the conditioned solids from the liquid. The solids would flow by gravity to a belt filter press for dewatering. The dewatered cake would be conveyed to a covered truck loading station.

The equipment for this alternative would be installed in a two-story building. Freezing equipment would be installed on the second floor and the belt press equipment on the first floor.

Construction Cost

Construction costs listed in Table 4-7 for the three alternatives were developed were based on manufacturers' quotations and experience from previous Black & Veatch Corp. (BV) projects. Building costs were estimated based on $100/sq ft for a single story building and $150/sq ft for a two-story building, assuming concrete block and brick construction. Costs for site work, electrical and instrumentation work, and contractors general requirements were assumed to be 15 percent of the subtotal. Contingencies and engineering were assumed to be 20 percent and 15 percent of the subtotal, respectively.

Table 4-7 Construction Cost Comparison of Alternatives

	Alternative 1 $	Alternative 2 $	Alternative 3 $
Belt Press	185,000	71,500	71,500
Feed Pump	20,000	20,000	20,000
Polymer Feed	50,000	50,000	50,000
Building	200,000	300,000	300,000
Crane	75,000	75,000	75,000
Cover Truck Loading	7,000	7,000	7,000
Conveyance Equipment	39,000	39,000	39,000
Thickening		70,000	70,000
Freeze/Thaw Equipment		400,000	292,400
Subtotal	576,000	1,032,500	924,900
Site Work	30,000	45,000	45,000
Electrical & Instrumentation	90,000	90,000	90,000
Subtotal	696,000	1,167,500	1,059,900
Contractor General Requirements	104,400	175,125	158,985
Contingencies	139,200	233,500	211,980
Engineering	69,600	116,750	105,990
Total	$1,009,200	$1,692,875	$1,536,855

Operation and Maintenance

Operation and maintenance costs shown in Table 4-8 were projected using information from the four demonstration locations and personal communications with personnel of other treatment facilities. It was assumed that all three alternatives would be operated 24 hours per day, 5 days per week. Power costs were projected from the electrical data provided by manufacturers and a unit cost of $0.07/kWh. Annual maintenance costs were based on manufacturers' recommended costs and BV experience with similar projects. Labor costs were developed assuming one full-time operator 8 hours per day for each alternatives, at a cost of $25/hr. Hauling costs at $9.00/cubic yard were developed from information gathered from the four demonstration locations. Tipping fees quoted by landfills at various locations in the U.S. ranged from $30 to $110/wet ton. A value $80/wet ton was used in the analysis.

Table 4-8 Annual Operation and Maintenance Costs

O&M Maintenance Costs $/Year	Alternative 1 $	Alternative 2 $	Alternative 3 $
Power	1,000	16,712	5,914
Polymer	5,110	1,022	1,022
Maintenance	5,271	10,364	8,827
Labor	26,000	26,000	26,000
Transport	15,029	7,665	7,665
Disposal	113,556	51,100	51,000
Total	$165,699	$112,864	100,528

Present Worth Analysis

A present worth analysis was performed assuming a 10-year design life and 8.5 percent interest. The results of this analysis are shown in Table 4-9.

Table 4-9 Present Worth Analysis

	Alternative 1 Conventional Disposal $	Alternative 2 Thickening, Block Freezer Conditioning, Belt Press Dewatering and Disposal $	Alternative 3 Thickening, BIOFREEZE™ Conditioning, Belt Press Dewatering and Disposal $
Construction Cost	1,009,200	1,692,875	1,536,855
Present Worth of O&M 10 Years, 8.5% Interest	1,088,963	740,537	659,600
Total Present Worth	2,098,163	2,433,412	2,196,455

The results of the present worth analysis indicate that the freeze/thaw process will be cost-competitive only if the thickening step is incorporated into the process. Freeze/thaw without pre-conditioning does not appear to be cost-effective.

Recommendations

Additional demonstration testing needs to be completed to verify the results of previous testing. The testing should concentrate on the thickening step to verify the assumptions used in this report.

The results of this round of testing confirm that F/T technology is effective in dewatering inorganic water treatment sludges. According to the present worth analysis, the BIOFREEZE™ energy recovery method appears to be similar to conventional disposal methods. Additional demonstration studies are required to verify the assumptions used in the analysis. Capital costs are a significant obstacle for application of F/T. It is recommended that additional freezing systems be evaluated to determine if the capital costs can be reduced.

For the biological sludges, the BIOFREEZE™ system appears to be able to provide substantial benefits to anaerobic digestion. Further testing needs to be completed to confirm that increased methane production can be achieved and to what extent dewaterability of the sludges can be expected. At larger wastewater plants that use cogeneration, it is possible that the potential increase in methane production could alone pay for the operating costs of the F/T system. It is recommended that EPRI pursue additional studies coupling F/T with anaerobic digestion.

Brine reject is a growing concern nationwide as RO treatment of potable water increases. Results achieved from this study on F/T of brine were inconclusive, however, previous work in this area appears promising. It is recommended that EPRI investigate developing the BIOFREEZE™ system operating parameters and/or other freeze concentration technologies in order to optimize the FC process.

Benefits to California

The vast majority of wastewater treatment plants in California use biological treatment, either in the form of activated sludge or trickling filters. In the biological treatment process, not only are particulates in the wastewater removed for disposal, but also excess biological growth. This wastewater residual can then be added to anaerobic digesters for stabilization. After digestion, many plants then dispose of this residual by land application or in landfills. The freeze-thaw process can be used to condition the biological residual before anaerobic digestion. The benefits to California from the use this technology include:

- Increased methane generation capacity – methane recovery would enable plants to provide additional cogeneration capacity, thereby, reducing total electric system requirements statewide and increasing the quantity of power generated using "green methods".

- Increased dewaterability of sludge – additional volume reduction of wastewater residuals will reduce the landfill capacity needed for disposal of residuals and afford more landfill space in the state for municipal purposes.

Membrane technology is gaining popularity throughout the water and wastewater industries in the state of California. Membranes effectively treat water to levels that previously were almost unattainable; however, like any treatment process, it generates a waste that must be handled. This waste consists of a concentrated solution of dissolved particles that are referred to as brine. Presently, disposal of this waste may be a costly proposition depending on the location of the treatment plant. The benefits to California from the use this technology include:

- Reduce the amount of salt to be disposed in landfills – this will reduce the landfill capacity needed for disposal and afford more landfill space in the state.

- Reduce the amount of salt to be disposed by ocean discharge – this will reduce the risk of environmental degradation from ocean discharges of brine.

In California, chemicals such as alum, ferric chloride, and lime are typically added to the liquid stream to remove particulates from raw water at water treatment plants,. Chemicals combine with the solids in the raw water to form larger particles that can be settled out of the water. The settled particles become water residuals when they are removed from the process. Presently, these residuals are often disposed of in receiving streams or in sanitary sewers. One way to lower the cost of residual disposal is to reduce its volume. The benefits to California from the use this technology include

- Increase the dewaterability of water plant residuals – additional volume reduction of residual will reduce the landfill capacity needed for disposal and afford more landfill space in the state.

ABBREVIATIONS

AWWARF	American Water Works Association Research Foundation
BV	Black & Veatch
DAF	Dissolved Air Flotation
EPRI	Electric Power Research Institute
EPRI-MWW	Electric Power Research Institute Municipal Water and Wastewater Program
F/T	Freeze Thaw
FC	Freeze Concentration
GBT	Gravity Belt Thickeners
MF	Microfiltration
Mgd	Million Gallons Per Day
MWD	Metropolitan Water District
OCSD	Orange County Sanitation District
OCWD	Orange County Water District
RO	Reverse Osmosis
SIR	SIR Worldwide, LLC
TDS	Total Dissolved Solids
TWAS	Thickened Waste Activated Sludge
USDW	Underground Sources of Drinking Water
WET	Whole Effluent Toxicity

GLOSSARY

Activated sludge	Floc produced in raw and settled wastewater by the growth of bacteria and other organisms in the presence of dissolved oxygen.
Anaerobic process	A biological process that requires the total absence of oxygen so that fermentation can occur.
Belt filter press	A machine used for the dewatering of sludge that uses continuously moving porous belts to separate liquid from solids by a combination of gravity drainage and squeezing.
Biochemical oxygen demand (BOD)	A measurement of the organic content of wastewater.
Biosolids	Primarily an organic, solid wastewater product that can be beneficially recycled.
Centrifuge	A machine used for the thickening or dewatering of sludge that separates solids from the liquid phase by centrifugal force.
Chlorine residual	The amount of chlorine still available after a certain length of contact time with the water or wastewater.
Clarifier	A tank or basin used for the separation of suspended matter from the liquid phase by gravity settling. It is also called a sedimentation or settling tank.
Coagulation	The destabilization and initial aggregation of colloidal and finely divided suspended matter by the addition of a floc-forming chemical or by biological processes.
Digestion	The decomposition of organic matter in sludge by bacteria and other microorganisms either in the presence of oxygen (aerobic digestion) or absence of oxygen (anaerobic digestion).
Effluent	In wastewater treatment, wastewater or other liquid, partially or completely treated or in its natural state, flowing out of a reservoir, basin, or treatment plant, or part thereof.

Filtration	The process of passing a liquid through a filter to remove suspended solids.
Floc	Small jelly-like masses formed in a liquid by adding a coagulating chemical.
Flocculation	The collection of coagulated suspended solids into a mass by gentle stirring.
Flotation	The raising of suspended matter to the surface of a tank, usually with the assistance of dissolved air, for removal by skimming.
Influent	Water, wastewater, or other liquid flowing into a reservoir, basin, or treatment plant, or any unit thereof.
Inorganic	Chemical substances of mineral origin, or more correctly, not of basically carbon structure.
Membrane filter	Technology used in water treatment for liquid-solids separation; system usually consists of forcing a liquid under pressure through a fine pore membrane capable of removing small-size contaminants from water.
Organic	Chemical substances of animal or vegetable origin, or more correctly, of basically carbon structure, comprising compounds consisting of hydrocarbons and their derivatives.
Secondary Treatment	Wastewater treatment system used for the substantial removal of organic matter and suspended solids.
Sedimentation	Settling or clarification; the process of allowing solids in water and wastewater to sink by gravity.
Solids	Material removed by water and wastewater treatment. Solids consist of organic and inorganic matter and water. Wastewater solids are residuals that exist before the biosolids portion has been treated to the point at which it is suitable for beneficial reuse.

REFERENCES

1. EPRI-CEC, Wastewater Biosolids and Water Residuals: Reference Manual on Conditioning, Thickening, Dewatering, and Drying, CEC Report CR-105603, September 1995.
2. Rosen, J. *Freeze Concentration Beats the Heat*, Mechanical Engineering, December 1990.
3. Tratnyek, J. *Freeze Crystallization*,
4. Douglas, J. Freeze Concentration: An Energy-Efficient Separation Process, EPRI Journal, January/February 1989.
5. Scanlan, P., Hunter, G. Emerging Technologies for Brine Treatment and Disposal,
6. Heist, J. *Freeze Crystallization*, Chemical Engineering, May 1979.
7. Collins, A. G., Dempsey, J. P., Parker, P. J. *Freeze/Thaw Conditioning of Water Treatment Residuals*; American Water Works Association Research Foundation: Denver, CO, 2000.
8. Slib, Schlamm, Sludge, American Water Works Association Research Foundation and KIWA Ltd., Denver, 1990.
9. Logsdon, G. S., Edgerley, P., Jr., *Sludge Dewatering by Freezing*. Journal of American Water Works Association, November 1971.
10. Parker, P.J., Collins, A. G., Dempsey, J. P., *Comparative Studies (Laboratory- and Field-Scale) of Freeze/Thaw Alum Residuals Dewatering*. Water Environment Federation/American Water Works Association Joint Residuals Conference, February 1998.
11. Vesilind, P. A., Martel, C. J., *Freezing of Water and Wastewater Sludges*. American Society of Civil Engineering, Journal of Environmental Engineering, May 1990.
12. AWWA Research Foundation handbook, 1987. Subject Area: Water Treatment and Operations.
13. Kato, S., Jenkins, M. B., Fogarty E. A., etc. Effects of Freeze-Thaw Cycles on the Viability of *Cryptosporidium parvum* Oocysts in Soil. Presented at the WEF Disinfection Conference, New Orleans, LA, 2000.
14. Fitch, D. E., Elliot, C. M., *Implementing Direct Filtration and Natural Freezing of Alum Sludge*, Journal of American Water Works Association, December 1986.
15. Schaefer, J. K., Clark, D., *Freeze/Thaw Dewatering: A Proven Solution for Alum Sludge Disposal*, Water World News, September/October 1990.

16. Wilhelm, J. H., Silverblatt, C. E. *Freeze Treatment of Alum Sludge*, Journal of American Water Works Association, June 1976.

17. Brown, G. N. Proof-of-Concept Pilot Study for Mechanical Freeze/Thaw Conditioning of Water Treatment Residuals, 55th Annual Meeting of the American Power Conference, 1993.

18. Personal Communication, Ray Ehrhard, EPRI.

19. Personal Communication, Frank Scherer, SIR Worldwide, LLC.

20. Pamson, G. *Examining Freezing Techniques for Solving a Major Problem With the Activated Sludge Process*, Orange County Sanitation District, Orange County, CA. Unpublished Work, 1998.