# Low Cost MEMS-Based Anemometers for Use Indoors and in HVAC Ducts

Grant Award #: EPC-14-013

Center for the Built Environment (CBE)
University of California, Berkeley

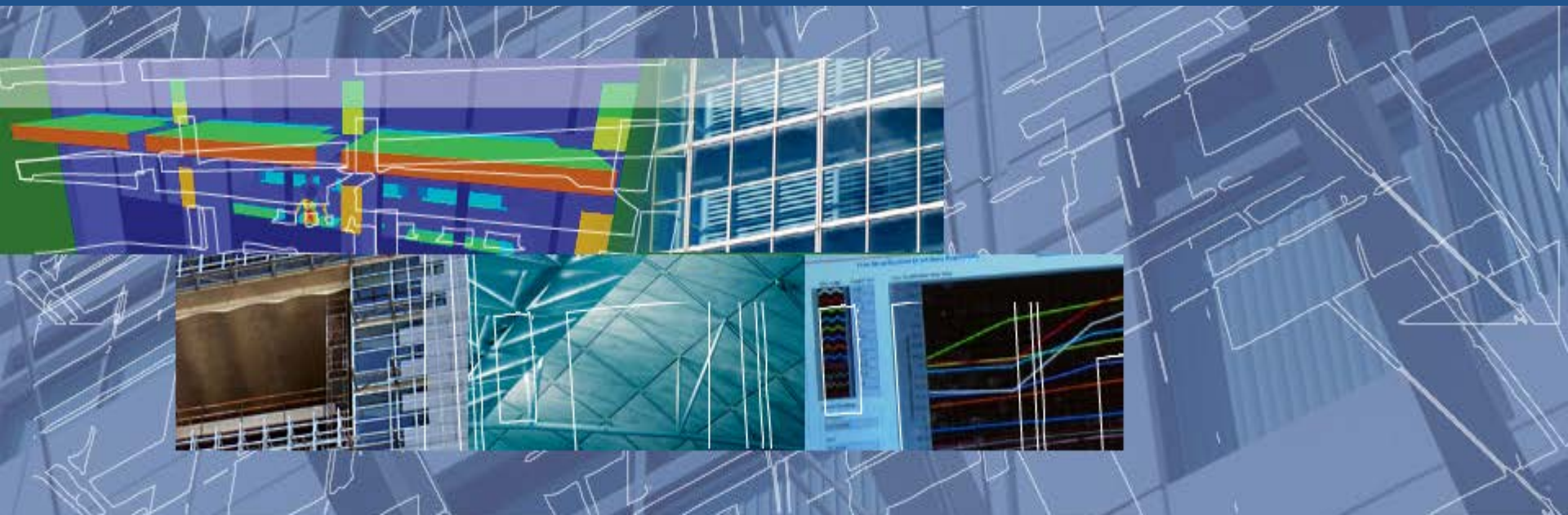

# Project Team

**UC Berkeley**

- **CBE:** Prof. Ed Arens, Hui Zhang, Therese Peffer
- **EECS:** Prof. David Culler, Michael Andersen, Gabe Fierro

**ChirpMicrosystems:** Richie Przybyla

**Taylor Engineering:** Steve Taylor

**TRC:** Gwelen Paliaga

**Industrial partners:** **Price Industries**
**Big Ass Fans**
**Vigilent**

# Better airflow measurement: applications are legion!

- Measure duct airflows and temperatures for controlling energy flows, demand ventilation, detecting filter loading, stuck dampers and water valves
- Reduce waste in HVAC operation caused by insufficient measurement points, drifted sensor calibration, unnecessary pressure drops.
- Control VAV box airflow accurately at minimum flows to prevent overcooling
- Health: measure outdoor air (OA) flow continuously and accurately
- Measure local air speeds and temperatures in occupied spaces; control ceiling fans & other comfort applications
- Fume hood containment control and maybe lower face velocity. Control blowers based on proof of unidirectional flow rather than a fixed 100 fpm.
- Room pressure control, cascading pressure control
- Medical, cleanroom: flow reversal alarms in corridors and isolation wards
- Directed air cooling of server racks in data centers
- Fire: directly measure flow and direction of smoke

# Example: energy savings with low minimum airflow

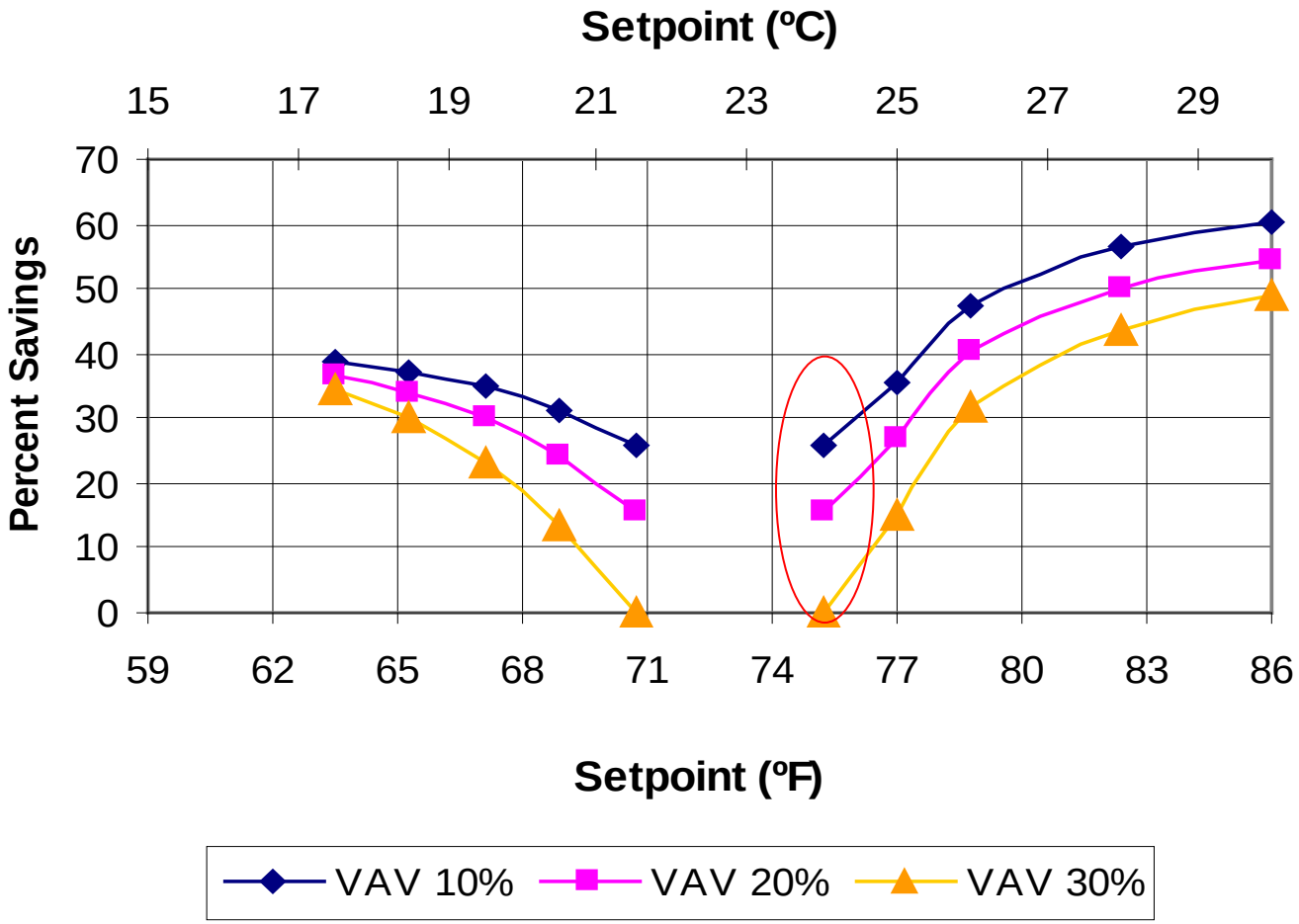


**Comparing to 30% minimum airflow:**

**17% saving for 20% minimum airflow**
**27% saving for 10% minimum airflow**

# Problems in our Stanley Hall;  energy and comfort nightmare

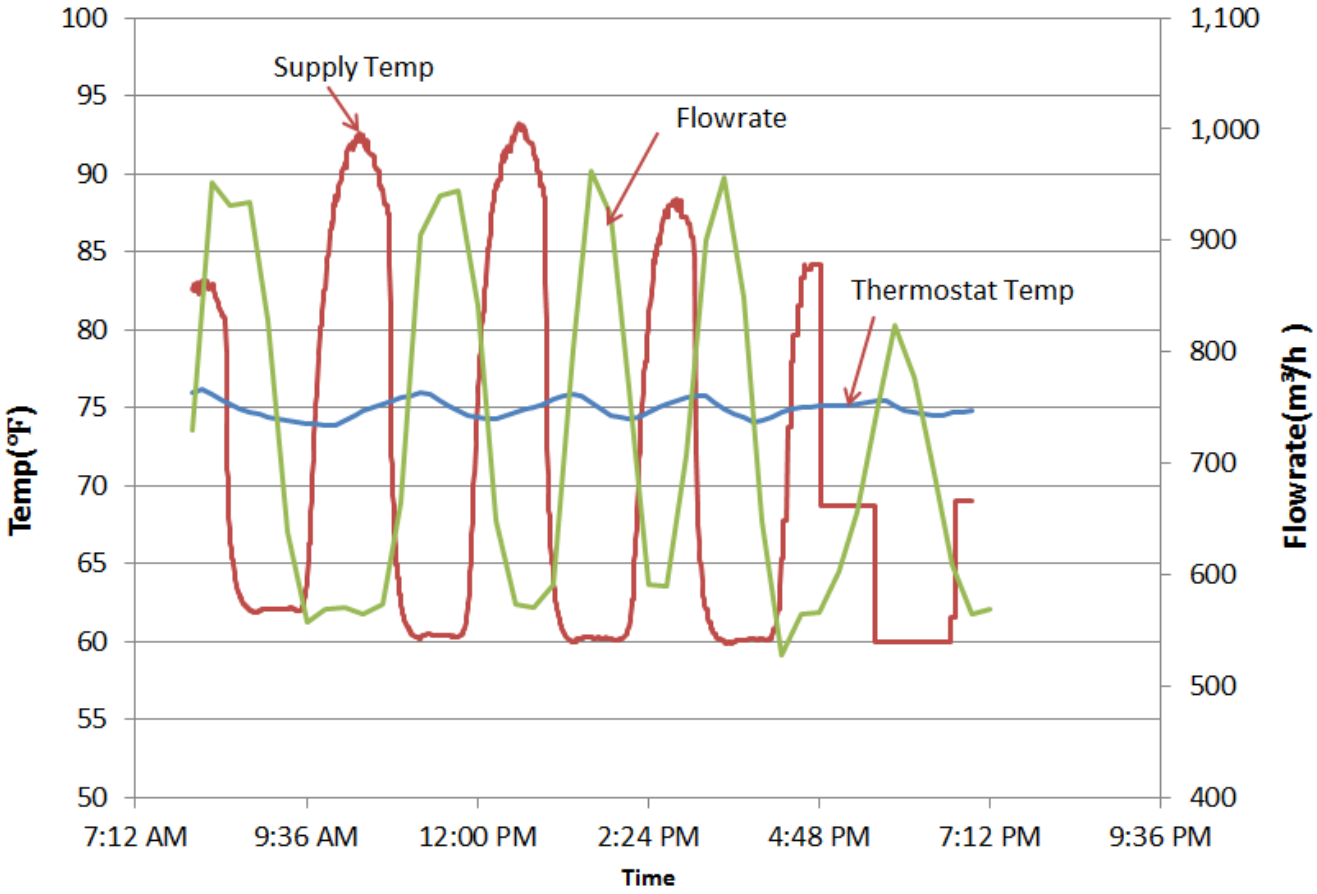

# Heating energy saving with improved air flow control

16 month study in Stanley Hall

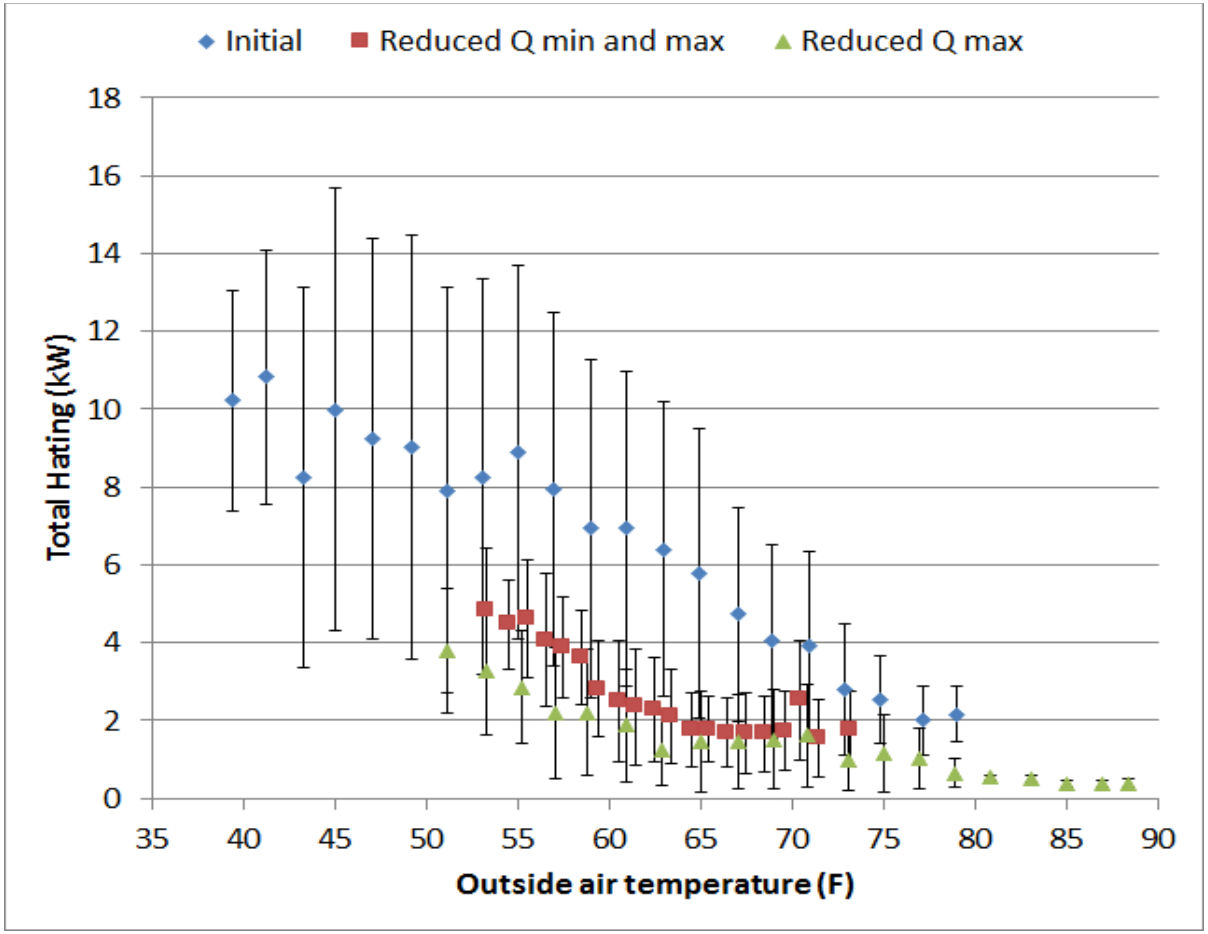

# Cooling energy saving with improved air flow control

16-month study in Stanley Hall

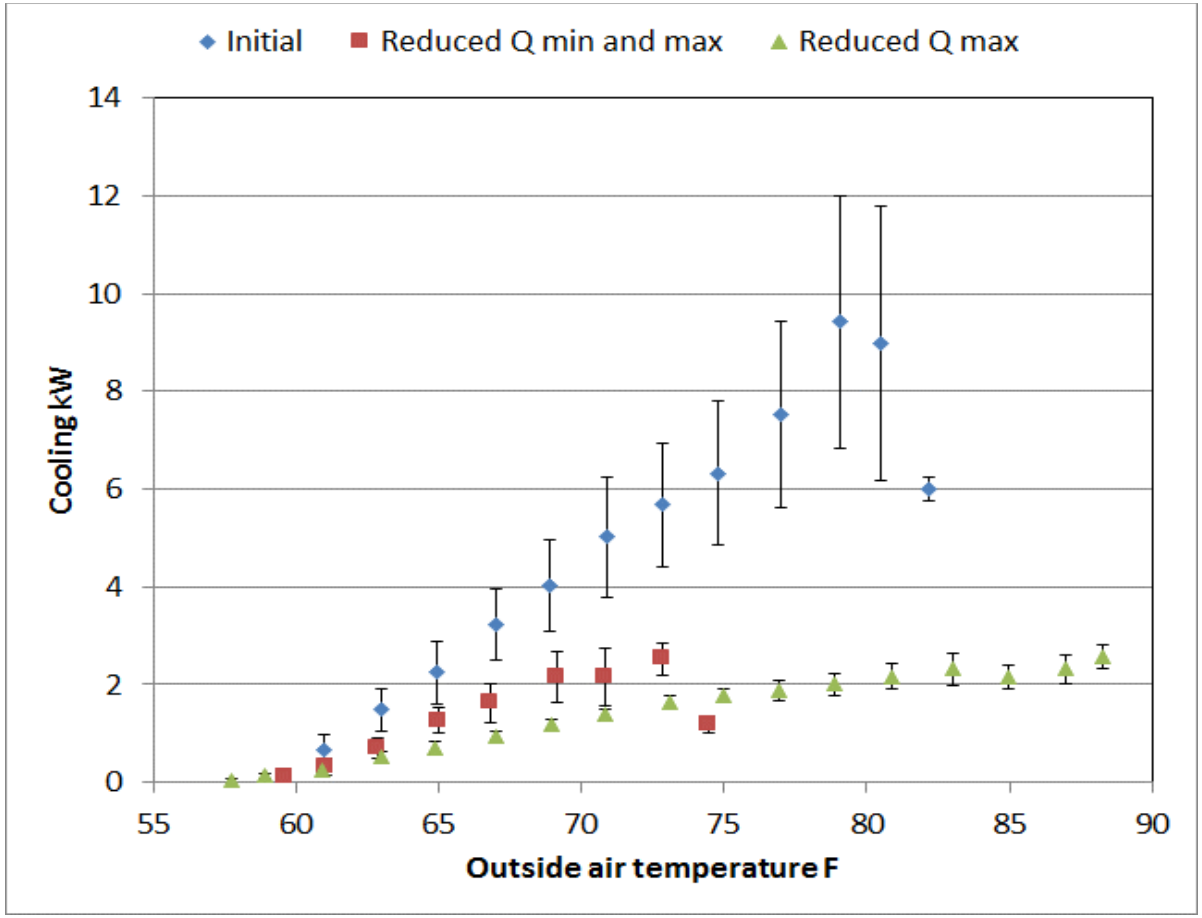

# Project Goals

Develop two new anemometers:

- Air velocity (AV) version for *rooms*
- Air flows (AF) version for *ducts*
- Low fabrication cost
- Advanced wireless communications
- Battery- powered with many year life
- High accuracy and calibration-free

AV 3-axis anemometer

Create new control applications for the buildings sector

- HVAC and architecture: design and operation
- Offices, labs, hospitals, data centers
- Health and safety

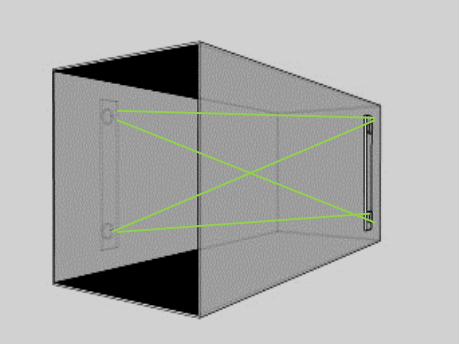

AF duct flow sensor; averaging paths

# Ultrasonic anemometry

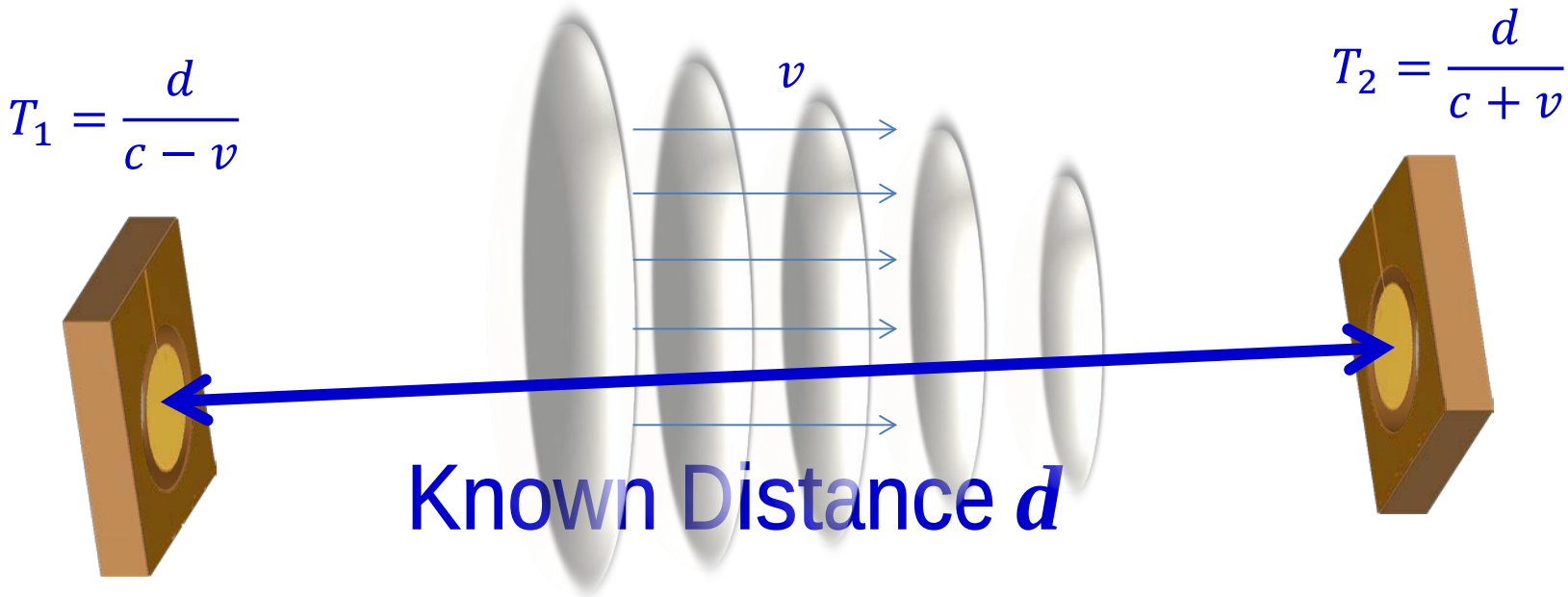


$$c = 0.5\left(\frac{d}{T_2} + \frac{d}{T_1}\right) = \sqrt{\frac{kT\gamma}{m_a}}$$

→**Measures temperature**

$$v = 0.5\left(\frac{d}{T_2} - \frac{d}{T_1}\right)$$

→**Measures air velocity**

# Lowering the cost barrier for use in buildings

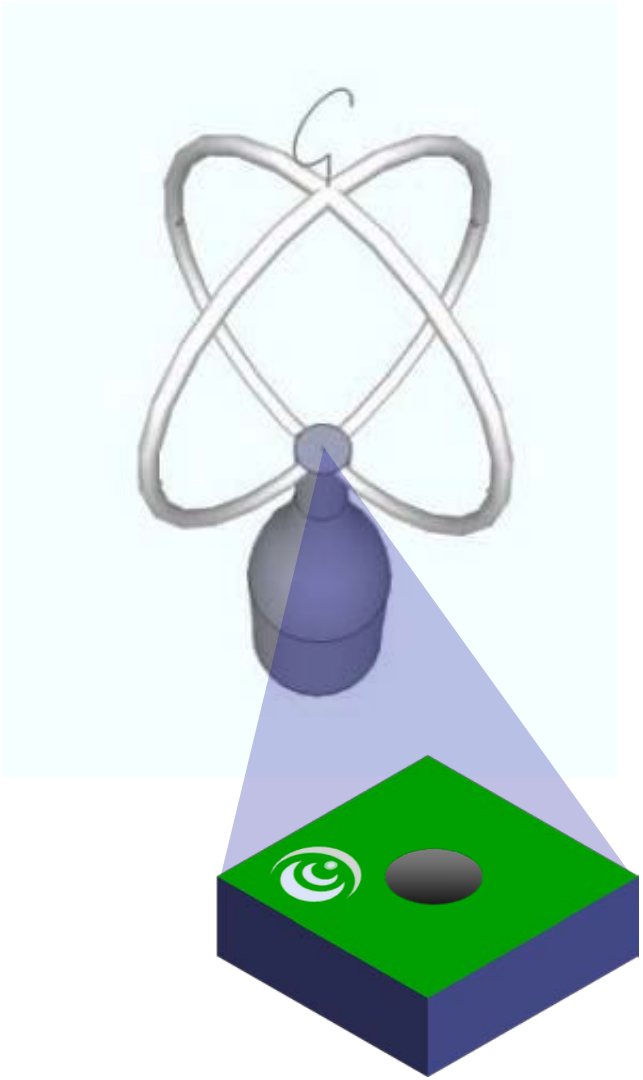

**€3350**
**3W**
**RS-232**

**<$100**
**<10mW**
**Wireless**

# Underlying technological innovation

- Uses a new kind of ultrasonic transducer based on Microelectromechanical Systems (MEMS) technology
- Connects to a cloud database system for managing data
- New controls applications will be developed and tested in buildings and HVAC systems

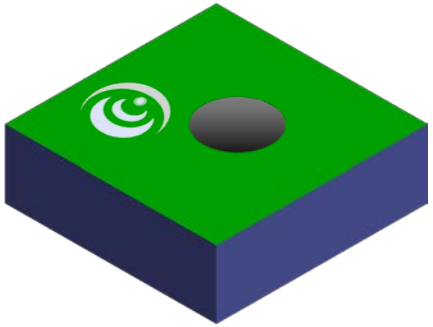

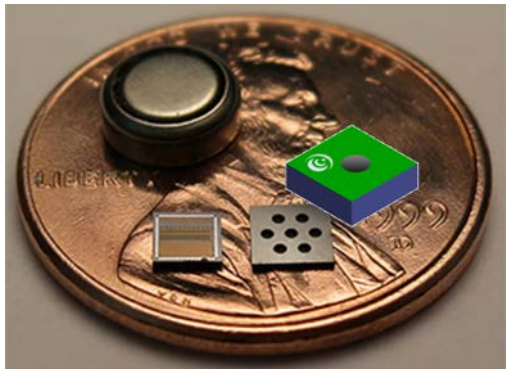

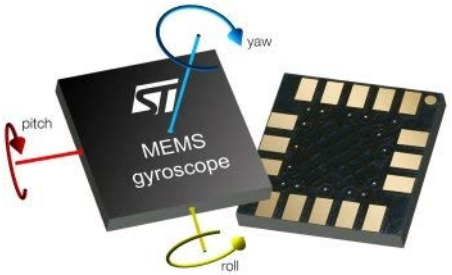

# Data processing and communications

## Low-power and power-flexible building blocks for fast prototyping and production

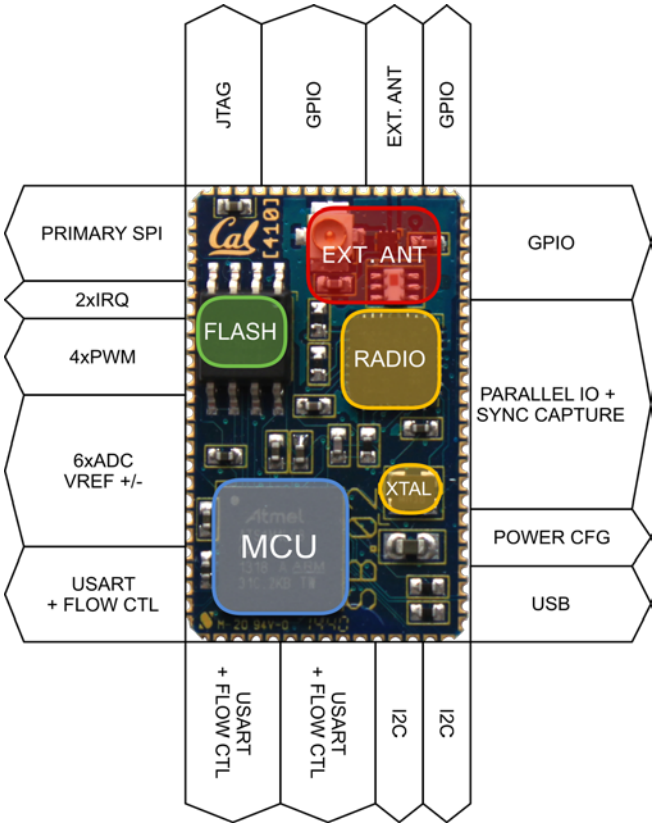


Wide dynamic range

- 32 bit ARM Cortex M4 @ 48 MHz
- 63 GPIO
- 512KB int , 64 Mbit ext flash
- 64 KB RAM
- next-gen 802.15.4 radio
- 92 DMips
- 416 $mm^2$
- 2.3 micro amperes idle current

# Questions?

Ed Arens: earens@berkeley.edu
Therese Peffer: tpeffer@berkeley.edu