Demonstration Test Bed for Advanced Control Systems

Christopher R Clarke
Senior Engineer
SCE Advanced Technology

June 22, 2016

Advanced Distribution Control Systems

- Introduction of customer adoption of Distributed Energy Resources (DERs) presents opportunities participation of such DERs in grid operations in conjunction with traditional circuit elements
- Some of the capabilities of the advanced distribution control systems that SCE is looking to pilot as part EPIC funded Integrated Grid Project (IGP) are:
  - Optimal Power Flow
  - Volt / Var Control
  - Virtual Microgrid
- Capabilities will only increase as new technologies become available are widely adopted

How do the Control Systems Work?

- Essentially by minimizing or maximizing some objective, subject to constraints
- For Example
  - Minimize the total cost of energy consumed on the feeder, subject to conductor thermal limits
  - Maximize the amount of generation injected into the distribution system, subject to voltage limits
  - Maximize conservation voltage reduction, subject to capacitor switching and inverter reactive power limits
  - Minimize active power flow through a microgrid virtual point of common coupling (PCC), subject to DER capability

What Devices Should be Considered?

- DER
  - Generation (synchronous, induction, and converter based)
  - Energy storage
  - Demand response capable load
- Non-DER
  - Shunt capacitor banks
  - Tap changing transformers
  - Remote interrupting switches (telemetry only)

A Closer Look at DER

- Photovoltaic Generation
  - How was it interconnected? - Net Energy Metering or Wholesale (WDAT)
  - Who owns the generator? – Customer owned, customer leased, utility owned
  - How big is the installation? – multi megawatt, hundreds of kilowatt, or a few kilowatts
- Battery Energy Storage Systems
  - What is the function? – Reliability or Market?
- Depending on the answers to these questions, the capabilities and communication paths are going to vary significantly

What Does This Mean for the Testbed?

- Control Paths
  - Utility Owned Installations
    - Utility owned field area network (FAN) node on the installation
  - Large Customer Owned /Leased Installations
    - Utility owned field area network (FAN) node on the installation or third party aggregator over the internet
  - Small Customer Owned / Installations
    - Third party aggregator over the internet
- Each control path has different latency and reliability attributes
- Additionally there is a path to read measurements from the protective relays at the distribution substation

What Does This Mean for the Testbed?

- Extensive Modeling Capabilities
  - Feeder and substation level
    - All cables, conductors, and switches
    - Connectivity between all devices
  - Device level
    - All DER and non-DER devices
    - Model the operational mode of DER and non-DER devices
- Real time capability
  - The substation, feeder, and device models must operate in real time
  - The simulation time step must be sufficiently fast to avoid unstable operation

What Does This Mean for the Testbed

- …But wait there's more
  - Optimal power flow controllers often need more data than just the current state of the network and interconnected devices
    - Current and forecast weather data
    - Historical demand – feeder and customer level
    - Locational marginal price
    - Distribution management system state estimate
    - Smart meter data
  - How extensive does the testbed need to be?
    - The testbed needs to be robust enough to grow to meet the needs of the control system under test

Testbed Diagram – Network Model

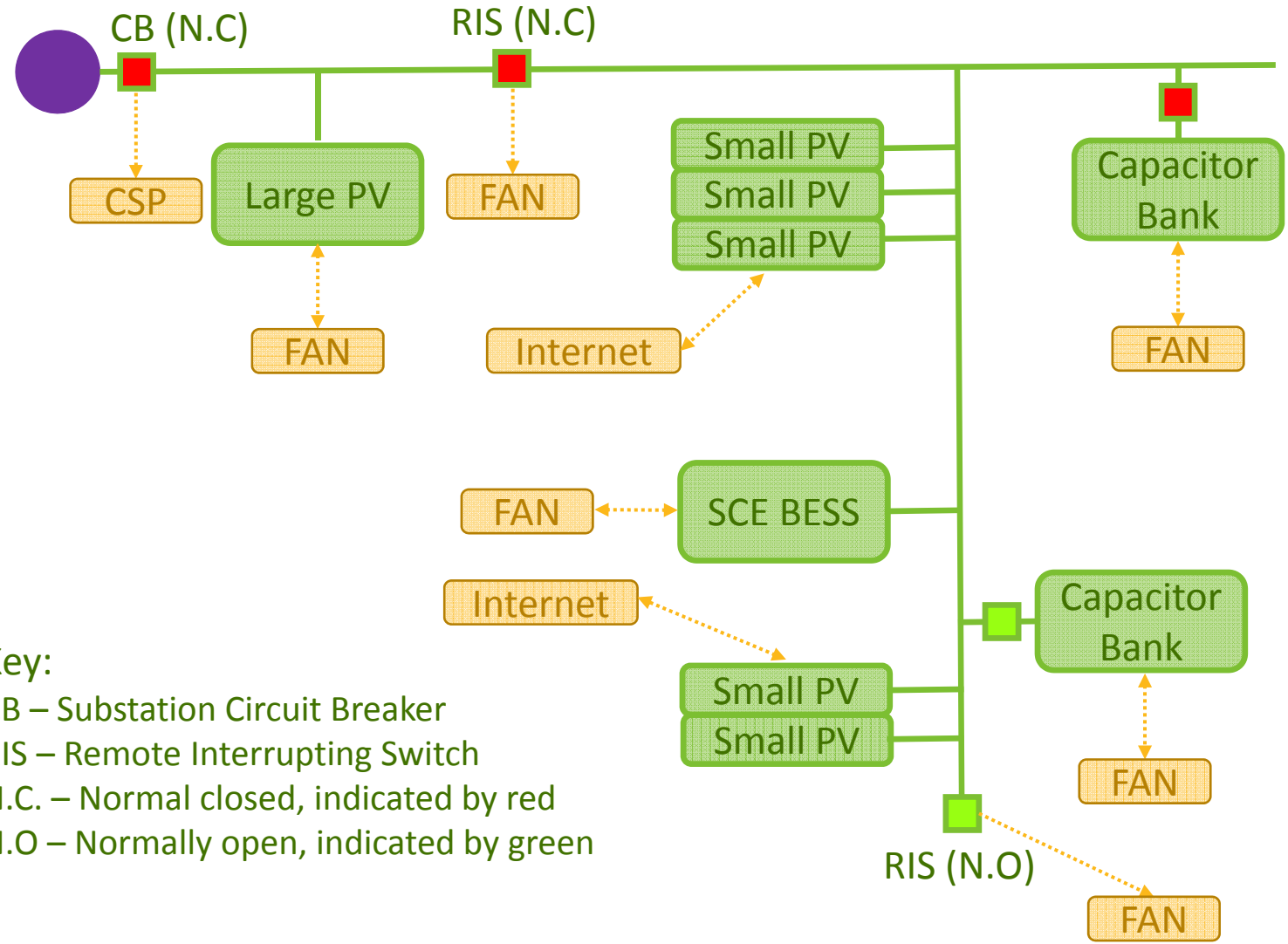

Key:
CB – Substation Circuit Breaker
RIS – Remote Interrupting Switch
N.C. – Normal closed, indicated by red
N.O – Normally open, indicated by green

Testbed Diagram - Simple

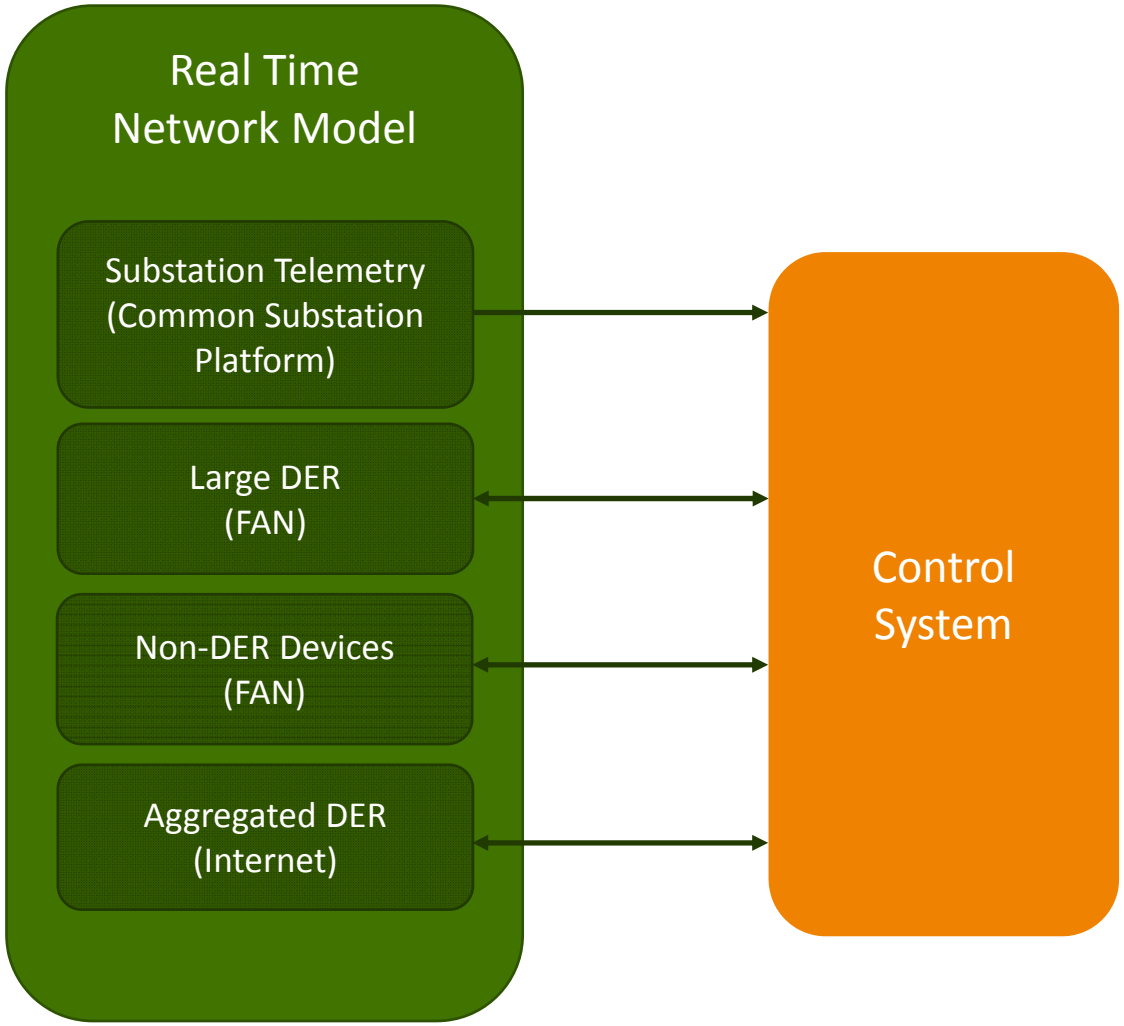

Testbed Diagram - Complex

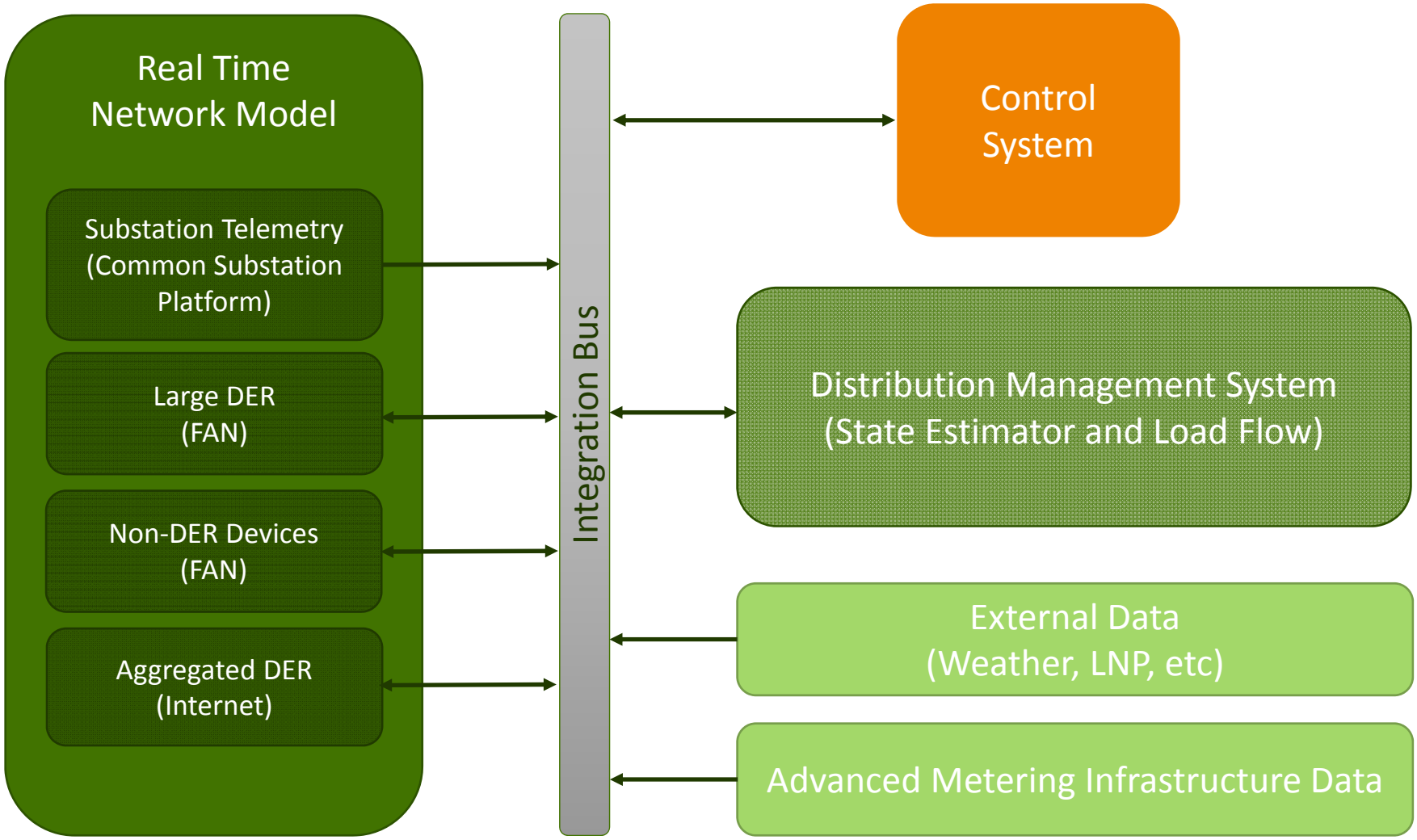

The Short Story

- The control system requires accurate performance of the DER and non-DER devices modeled in the real time simulated network
- The testbed must be capable of supporting all of the communication protocols used by the control system
- The control system may require a significant amount of data to be supplied from the testbed

Testbed Use Scenarios

- Control System Configuration
- Control System Testing
- Troubleshooting
- Operator / End User Training

Control System Configuration

- Helps to lower the learning curve for engineering and IT teams when it comes to installing and configuring the control systems in the field
- Multiple configurations can be tested in the lab to determine the most effective field deployment
- Hypothetical configurations can be tested to demonstrate the impacts of different adoptions and uses of DER technology

Control Scheme Testing

- Test procedures can be scripted, run, and verified against test criteria much faster than with test configuration methods
- Simplifies test documentation
- As new control system updates are applied, the exact same test scenarios can be re-run and results compared to previous results
- Unique conditions that are rarely encountered in the field can be easily created in the testbed

Troubleshooting

- Control systems can be put into a ‘debug’ mode for in-depth diagnostics during testing
- Field conditions during unexpected or unintended operations can be recreated in the lab
  - The operation should be repeatable in the lab
  - Fixes can be tested in the lab and verified against the recreated event
  - Vendors are engaged during the debugging phases to make continuous improvements and to test improved schemes before field deployment

Operator / End User Training

- Allows the operator to get hands on experience in both a realistic and no-risk environment
- Allows end users to gain confidence in both using the system and the performance of the system
- Excellent environment for instantaneous feedback from operators using the system

Thank You

- Questions? Comments?