Distributed Optimized Storage (DOS)

Jorge Araiza Jr.

June 22, 2016

Agenda

- Overview
  - Project
  - DOS Systems
- DOS IGP Objectives
  - DOS Use Case Description
  - Phased IGP Implementation Approach
- Status

DOS Overview

- The DOS program is managed as part of the 10 subproject of the Integrated Grid Project (IGP)
- As part of the DOS, two energy storage systems will be deployed to:
  - Support the demonstration of **next generation grid infrastructure** to manage, operate, and optimize the use of preferred resources
  - Determine the **controls and protocols** to enable effective preferred resources interconnection
  - Support the ability to **optimally manage** an integrated distribution system to provide safe, reliable, affordable service
  - Support the development **framework to inform locational value analysis** of DERs and understand impacts to future utility investments

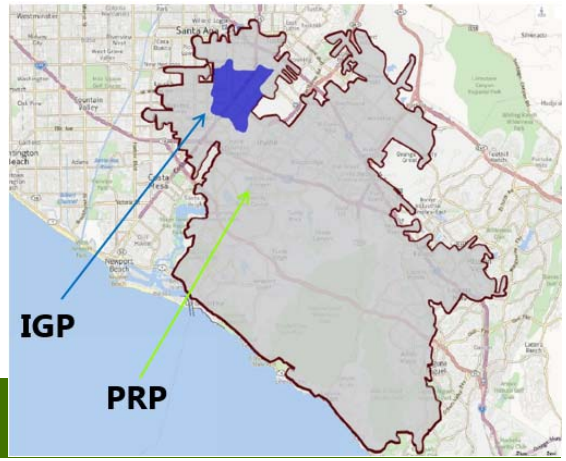

DOS System Overview

- ESS Specs
  - 250kVA/250kWh or larger
  - Fully integrated
    - PCS and Li-ion ES
  - Communications and Controls
    - Field Area Network (FAN)
    - Autonomous operation and through centralized remote IGP controller
- Leveraging existing SCE master agreement with top-tier supplier

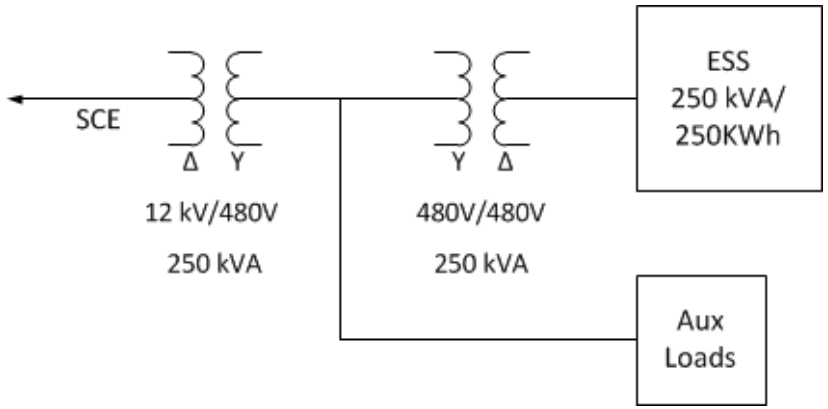

DOS IGP Objectives

- Define future Energy Storage Communication and Controls requirements
  - Utility owned
  - 3rd party
- Leverage IGP to identify additional distribution benefits for Utility Controlled Energy Storage Systems (UCESS)
  - Identifying, quantifying, monetizing and capture
- Demonstrate storage system integration/alignment with the new Grid Management System (GMS) architecture
- Demonstrate ESS solution(s) that directly enable dual-use functionality
  - Reliability
  - Wholesale Market (CAISO)
- Demonstrate centralized and distributed Energy Storage System aggregation application(s)

DOS Use Case Description

Utility Controlled Energy Storage Systems (UCESS) deployed on the distribution grid are integrated, configured, and controlled so as to allow their use for the following two functions:

1. Use of UCESS by the utility for distribution grid reliability and optimization needs.
2. Bidding of UCESS assets (or portion of) to the wholesale market when not needed for reliability and optimization purposes.

Operationally, the UCESS will be operated, including when bid into the wholesale market, constrained by the reliability needs of the distribution grid.

Phased IGP Implementation Approach

Implementation Phase 1: IGP Control System keeps all available UCESS capacity for internal reliability/optimization. No capacity is offered to the wholesale market

Implementation Phase 2: IGP Control System offers specific UCESS capacity for a specific fixed period of time

Implementation Phase 3: IGP Control System offers UCESS capacity to the wholesale market dynamically

Status

- Full use-case developed and reviewed by main internal stakeholders
- ESS are scheduled to be deployed in Q3 2017