CALIFORNIA
ENERGY
COMMISSION

ENERGY INNOVATIONS SMALL GRANT PROGRAM
Renewable Energy Technologies

The Anaerobic Pump Prototype Testing

FEASIBILITY ANALYSIS

July 2002
500-02-035F

Gray Davis, *Governor*

CALIFORNIA ENERGY COMMISSION

Prepared By:
Hal Clark
Grant Program Administrator
San Diego State University Foundation

Prepared For:
California Energy Commission
Energy Innovations Small Grant Program

Researcher:
Dr. David R. Boone
Portland State University

Grant Number:
99-38

Philip Misemer
Grant Program Manager

Terry Surles
Deputy Director
Technology Systems Division

Steve Larson
Executive Director

LEGAL NOTICE

This report was prepared as a result of work sponsored by the California Energy Commission (Commission). It does not necessarily represent the views of the Commission, its employees, or the state of California. The Commission, the state of California, its employees, contractors, and subcontractors make no warranty, express or implied, and assume no legal liability for the information in this report; nor does any party represent that the use of this information will not infringe upon privately owned rights. This report has not been approved or disapproved by the Commission nor has the Commission passed upon the accuracy or adequacy of the information in this report.

PREFACE

The Public Interest Energy Research (PIER) Program supports public interest energy research and development that will help improve the quality of life in California by bringing environmentally safe, affordable and reliable energy services and products to the marketplace.

The PIER Program, managed by the California Energy Commission (Commission), annually awards up to $62 million of which $2 million/year is allocated to the Energy Innovation Small Grant (EISG) Program for grants. The EISG Program is administered by the San Diego State University Foundation under contract to the California State University, which is under contract to the Commission.

The EISG Program conducts up to four solicitations a year and awards grants up to $75,000 for promising proof-of-concept energy research.

PIER funding efforts are focused on the following six RD&D program areas:

- Residential and Commercial Building End-Use Energy Efficiency
- Industrial/Agricultural/Water End-Use Energy Efficiency
- Renewable Energy Technologies
- Environmentally-Preferred Advanced Generation
- Energy-Related Environmental Research
- Strategic Energy Research

The EISG Program Administrator is required by contract to generate and deliver to the Commission a Feasibility Analysis Report (FAR) on all completed grant projects. The purpose of the FAR is to provide a concise summary and independent assessment of the grant project using the Stages and Gates methodology in order to provide the Commission and the general public with information that would assist in making follow-on funding decisions (as presented in the Independent Assessment section).

The FAR is organized into the following sections:

- Executive Summary
- Stages and Gates Methodology
- Independent Assessment
- Appendices
    - Appendix A: Final Report (under separate cover)
    - Appendix B: Awardee Rebuttal to Independent Assessment (Awardee option)

For more information on the EISG Program or to download a copy of the FAR, please visit the EISG program page on the Commission's Web site at:
http://www.energy.ca.gov/research/innovations

or contact the EISG Program Administrator at (619) 594-1049 or email eisgp@energy.state.ca.us.

For more information on the overall PIER Program, please visit the Commission's Web site at http://www.energy.ca.gov/research/index.html.

Executive Summary

Introduction

Anaerobic digestion, as it is currently practiced, is limited in application because incomplete biochemical reactions severely limit the extent of the biological production of methane. This limitation is mainly due to the resistance to decomposition of many complex solid organic substances that constitute wet biomass.

In 1980, Dr. Keith A. Schimel invented a new continuous flow, continuous culture anaerobic process which was shown to nearly complete the digestion of wet biomass solids with an ordinary mixed culture of anaerobes. The design concept of this process is based on using the product biogas to plasticize the residual solids. In these early tests, development was focused on solids reduction and doubling the normal digestion speed of raw waste activated sludge. The data showed as much as 90% volatile solids (Organic materials) reduction and 80% chemical oxygen demand reduction could be achieved if the process is operating at optimum.

In the current project the focus was to validate the high solids reduction and improve the process's biogas (primarily methane) production. Methane produced by this process can be used to fuel electricity power plants in California. If deployed the technology could not only play an important role in the reduction of wet biomass solids, it could also provide a significant amount of fuel gas (methane) for power plants.

The project compared the methane production performance of this advanced hydrolysis and biogasification process with a conventional digestion process. Two prototype reactor systems were implemented. The advanced hydrolysis and biogasification process and a conventional, single-stage, "completely mixed by stirring" (CSTR) digester were operated side by side under identical conditions. Both systems were fed the same substrate, a 50:50 mixture of wastewater sludge at the same loading rates. This substrate is commonly used as a test substrate because it is widely available and is difficult to degrade. Both systems were held at the same low incubation temperature (20 ^{o} C) so that accurate observations could be made.

Objectives

The goal of this project was to determine the feasibility of using the advanced hydrolysis and biogasification process for significant production of power plant fuel (biogas) by the reduction of wet biomass solids. The performance of the prototype reactor system implementing the advanced hydrolysis and biogasification process was compared with the performance of the CSTR reactor, the conventional technology used to reduce wet biomass solids. The following project objectives were established:

1. Peak specific gas production rate higher than the CSTR by a factor of 3.
2. Peak Methane production rate higher than the CSTR by a factor of 4.
3. Methane yield in liters per kg volatile solids twice that of the CSTR.
4. Total volatile solids reduction three times higher than the CSTR.
5. Total volatile Chemical Oxygen Demand Reduction three times better than the CSTR.

Outcomes

This prototype reactor system implementing the advanced process had the following measurable outcomes:

1. The specific gas production rate is 3.3 times higher than that for the CSTR.
2. The peak methane production rate is 3.9 times higher than that for the CSTR.
3. The methane yield in liters per kg volatile solids added is 1.88 higher than the CSTR.

4. The volatile solids reduction is 2.35 times more than for the CSTR.
5. The total Chemical Oxygen Demand Reduction is 3.35 better than for the CSTR.

Conclusions

These results were developed by comparing the results of the tests of the two prototype units of identical volume, operated side by side at 20 degrees Centigrade. The Outcomes show that the prototype reactor system implementing the advanced process produces 1.88 times more methane per unit mass fed than the CSTR. All other figures of merit are also superior to those of the CSTR.

These results verify the feasibility of using the advanced hydrolysis and biogasification process for methane production thereby increasing wet biomass solids reduction. Overall, the advanced hydrolysis and biogasification process can convert organic solids to methane between two (2) and four (4) times faster (depending on loading) than a comparable CSTR unit. Most importantly, the total volatile solids reduction was 2.35 times more complete on the advanced hydrolysis and biogasification process than with CSTR. While this is less than the goal of three times improvement, it is nonetheless a significant improvement, because with the advanced hydrolysis and biogasification process nearly all the biomass feedstock is convertible to biogas (primarily methane), leaving little solid material for disposal.

It is important to note that while this experiment was performed at 20 ^{o}C in order to slow the reaction for purposes of comparison between the advanced hydrolysis and biogasification process and CSTR, the optimal operating temperature for the mesophilic range is 35 ^{o}C. The standard rule of thumb is that the reaction rates for these digesters would be about 2.5 times faster if operated at 35 ^{o}C rather than at 20 ^{o}C.

Benefits to California

All large power plants being proposed for California rely on natural gas as the fuel. Most of that fuel is imported into the state. Biogas (predominately methane) can be produced from indigenous biomass material. The major sources of wet biomass waste produced in California are sewage sludge production, fiber production (pulp and paper), food processing, agriculture and animal wastes. These sources could generate over 45 million tons of wet biomass in California. If the advanced hydrolysis and biogasification process were to penetrate 100 % of the Wastewater Treatment industry and 20 % of the agriculture industry, that process would produce an estimated 1.54 billion therms of biogas (methane) gas per year for electrical generation or for process heat. Because of the existing capital investments in waste treatment, benefits would build over a period of 10 to 15 years. It is likely that investors would first build treatment facilities utilizing the advanced hydrolysis and biogasification process to handle concentrated sources of wet biomass waste. Once scrubbed of impurities, the biogas could be directly used in power plants.

In addition, the deployment of this process would reduce the environmental problems and expense associated with the disposal of large volumes of wet biomass solids.

Recommendations

The testing completed on this project has assisted in identifying areas where additional development is needed. Areas for additional effort are:

- Demonstrate a commercial scale (sized 1 to 4 ton/day) agricultural prototype, and select a strategic partner to help with commercialization. Seriously evaluate the benefits of designing this prototype to be highway truck transportable.
- Evaluate methane production from new feed stocks to expand applications for the advanced hydrolysis and biogasification process.

Stages and Gates Methodology

The California Energy Commission utilizes a stages and gates methodology for assessing a project's level of development and for making project management decisions. For research and development projects to be successful they need to address several key activities in a coordinated fashion as they progress through the various stages of development. The activities of the stages and gates process are typically tailored to fit a specific industry and in the case of PIER the activities were tailored to be appropriate for a publicly funded energy research and development program. In total there are seven types of activities that are tracked across eight stages of development as represented in the matrix below.

Development Stage/Activity Matrix

	Stage 1	Stage 2	Stage 3	Stage 4	Stage 5	Stage 6	Stage 7	Stage 8
Activity 1								
Activity 2								
Activity 3								
Activity 4								
Activity 5								
Activity 6								
Activity 7								

A description the PIER Stages and Gates approach may be found under "Active Award Document Resources" at: http://www.energy.ca.gov/research/innovations and are summarized here.

As the matrix implies, as a project progresses through the stages of development, the work activities associated with each stage needs to be advanced in a coordinated fashion. The EISG program primarily targets projects that seek to complete Stage 3 activities with the highest priority given to establishing technical feasibility. Shaded cells in the matrix above require no activity, assuming prior stage activity has been completed. The development stages and development activities are identified below.

Development Stages:		**Development Activities:**	
Stage 1:	Idea Generation & Work Statement Development	Activity 1:	Marketing / Connection to Market
Stage 2:	Technical and Market Analysis	Activity 2:	Engineering / Technical
Stage 3:	Research & Bench Scale Testing	Activity 3:	Legal / Contractual
Stage 4:	Technology Development and Field Experiments	Activity 4:	Environmental, Safety, and Other Risk Assessments / Quality Plans
Stage 5:	Product Development and Field Testing	Activity 5:	Strategic Planning / PIER Fit - Critical Path Analysis
Stage 6:	Demonstration and Full-Scale Testing	Activity 6:	Production Readiness / Commercialization
Stage 7:	Market Transformation	Activity 7:	Public Benefits / Cost
Stage 8:	Commercialization		

Independent Assessment

For the research under evaluation, the Program Administrator assessed the level of development for each activity tracked by the Stages and Gates methodology. This assessment is summarized in the Development Assessment Matrix below. Shaded bars are used to represent the assessed level of development for each activity as related to the development stages. Our assessment is based entirely on the information provided in the course of this project, and the final report. Hence it is only accurate to the extent that all current and past work related to the development activities are reported.

Development Assessment Matrix

Stages / Activity	1 Idea Generation	2 Technical & Market Analysis	3 Research	4 Technology Develop-ment	5 Product Develop-ment	6 Demon-stration	7 Market Transfor-mation	8 Commer-cialization
Marketing								
Engineering / Technical								
Legal/ Contractual								
Risk Assess/ Quality Plans								
Strategic								
Production. Readiness/								
Public Benefits/ Cost								

The Program Administrator's assessment was based on the following supporting details:

Marketing/Connection to the Market. The awardee's marketing and connection to the market results from a long career in the field. Specific market connection will be established by the initial success of commercialization activities. Appendix A lists 6 specific limiting factors in the BioEnergy markets.

Engineering/Technical. This project was successful. Engineering and technical feasibility of the advanced hydrolysis and biogasification process was confirmed. Technical problems, which arose during this study, did not present a fatal challenge and were successfully overcome in the process of the research.

Legal/Contractual. The advanced hydrolysis and biogasification process is protected by patent. Systems incorporating this process have been named "The Anaerobic Pump" (TAP). A commercializer has not been selected.

Environmental, Safety, Risk Assessments/ Quality Plans. The researcher must complete the planning process for commercialization of this product. Initial drafts of the following Quality Plans are needed prior to initiation of Stage 4 development activity: Reliability Analysis, Failure Mode Analysis, Manufacturability, Cost and Maintainability Analyses, Hazard Analysis, Coordinated Test Plan, Product Safety and Environmental.

Strategic. This product has no known critical dependencies on other projects under development by PIER or elsewhere.

Production Readiness/Commercialization. Currently there are no full-scale TAP units in operation in California. Effort has been devoted to finding an industrial partner to help develop and sell this technology.

Public Benefits. Public benefits derived from PIER research and development are assessed within the following context:

- Reduced environmental impacts of the California electricity supply or transmission or distribution system.
- Increased public safety of the California electricity system
- Increased reliability of the California electricity system
- Increased affordability of electricity in California

The primary public benefit offered by the proposed technology is to increase the reliability of the California electricity system. This will be accomplished by providing an additional, more economical source of fuel for electric power generation. Biogas will tend to stabilize the price of methane fuel for electric generation especially in times of short supply.

The following table was prepared from source data provided in Appendix A and its Appendix 1. It assumes a 15 ton/day TAP reactor system operating at 20 ^{o}C. This is the temperature at which this project experiment was conducted; hence the data reported in Appendix A is directly applicable. The table shows that the 15 ton TAP unit would produce over 10 MBTU/hour (101.05 Therms) with a spot market value of $165,524 per year under the stated assumptions.

20 ^{o}C 15 Ton/Day Methane Income Worksheet			
Step Description	**TAP**	**CSTR**	**Assumption / Ref. To Appendix A / Factors**
Volatile Solids (VS) Feed	584	584	Kg/hr, see App. 1, page 28 (TAP) and page 30 (CSTR).
Volatile Solids (VS) Feed	14,016	14,016	Kg/day (kg/hr x 24 hr/day)
Volatile Solids (VS) Feed	15.42	15.42	Short Tons/day (Units Conversion)
Methane Yield factor	0.49	0.26	m^3 CH_4/kg VS added - See Exec. Summary, Page 5.
Methane Produced - m^3/day	6,867.84	3,644.16	m^3 Check the ratio = 1.884615, see Table XII, Page 32
Methane Produced - SCF/day	242,508.47	128,677.97	Convert by 35.3107344632768 SCF/m^3
Methane Produced - SCF/hour	10,104.52	5,361.58	
Heating Value of Methane	1000	1000	BTU/SCF
Energy Produced	10,104,520	5,361,582	BTU/hour
Energy Produced as Methane	101.05	53.62	Therm
Value of the Methane gas/hour	$ 22.23	$ 11.80	At $0.22 per Therm (Current futures Spot Market)
Value of the Methane as gas	$ 533.52	$ 283.09	Per Day
Value of the Methane as gas	$ 165,524	$ 87,829	Per year at 85% utilization

The preceding analysis assumes that the biogas is sufficiently pure to be marketed as a gas product at the price of equivalently energetic natural gas. This may or may not be the case.

An alternative approach to marketing the product is to convert the biogas to electricity on site. Several different generator systems could be envisioned ranging from a combined cycle power

plant with thermal efficiency over 50% or a methane burning reciprocating engine driven generator with a thermal efficiency of approximately 40%, or as the researcher has proposed in Appendix A, a Solo Micro turbine. The income worksheet for this generator system follows.

20 °C 15 Ton/Day Worksheet - Income from the Sale of Electricity			
Step Description	**TAP**	**CSTR**	**Assumption / Ref. To Appendix A / Factors**
Micro turbine thermal efficiency	27.1%	27.1%	Solo Micro turbine, see App. 1, page 29
Conversion Factor	0.000293	0.000293	Conversion of BTU to KwHr
Power Output, Kw	802.33	425.73	Electricity generated by Micro turbine
Value of the Electricity at $0.06	$ 48.14	$ 25.54	Per hour
Value of the Electricity at $0.06	$ 1,155.35	$ 613.04	Per day
Value of the Electricity at $0.06	$ 358,448.59	$ 190,197.21	Per year at 85% utilization

Using this generator, and with an assumed market value for biogas generated electricity of six cents per KW-HR, the product value is $358,448 per year. The wholesale electricity market has high volatility. At the time this report was written, electricity was worth about three cents per KW-HR.

The estimated capital investment required to construct the 15 ton/day TAP system including micro turbine is tabulated below. Refer to pages 34 and 35 of Appendix 1 of Appendix A.

20 °C 15 Ton/Day Summary Cost Worksheet		
Cost Item / Activity	Non-recurring	Recurring
Capital Costs	$ 2,306,670	
Installation Costs	$ 216,878	
Annual O&M Costs		$60,217
Misc. Costs	$ 280,395	
Total Costs	$ 2,803,943	$60,217

These tabulated data include the $510,000 cost (approximately) of one micro turbine generator. The income figure of $358,448 per year depends on the 6 cent per KW-HR sales price. Subsidies from state and federal governments will have an additional effect on the economics of biogas. With these numbers there is a simple payback in 9.4 years. The additional major income source for this system is tipping fees collected for disposal of the sewage sludge (feedstock of TAP). The EISG Program Administrator estimates tipping fees to be $20 per ton across all EISG projects, in order to compare fairly one project to another. Note that the collection of tipping fees represents a risk to the operator of TAP that is not controlled by TAP. With that caveat, a 15 tons per day facility operating at 85% plant availability, could collect $232,687 in tipping fees per year. The simple payback with tipping fee income and a six-cent power price is 5.27 years.

The preceding analysis is for a TAP system operating at 20 °C, because the project experiment was held at that temperature for experimental reasons. That is, to slow the reaction for a manageable experiment as well as for convenience and for economy of construction of the prototype digesters. In the real world of digester operation, the optimum set temperature would be 35 °C. At this temperature, the digestion process would be expected to proceed at a rate of 2.5 times the rate at 20 °C and if operated at 60 °C the reaction speed could be expected to double

one more time. When calculations similar to the preceding are made using a 15 ton/day system designed to operate at 35 ^{o}C, the simple payback is about 2.5 years,

Program Administrator Assessment

After taking into consideration: (a) research findings in the grant project, (b) overall development status as determined by stages and gates and (c) relevance of the technology to California and the PIER program, the Program Administrator has determined that the proposed technology should be considered for follow-on funding within the PIER program.

Receiving follow-on funding ultimately depends upon: (a) availability of funds, (b) submission of a proposal in response to an invitation or solicitation and (c) successful evaluation of the proposal.

Appendix A: Final Report (under separate cover)

Appendix B: Awardee Rebuttal to Independent Assessment (none submitted)

Appendix A to FAR 99-38

ENERGY INNOVATIONS SMALL GRANT (EISG) PROGRAM

EISG FINAL REPORT

THE ANAEROBIC PUMP PROTOTYPE TESTING

EISG AWARDEE
TECHNOLOGY MATRIX CORPORATION
330 Apple St.
Syracuse, NY 13204-2108
Phone: (315) 425-7741
Email: cengr@baldcom.net

AUTHORS
Keith A. Schimel, Inventor,
Technology Matrix Corporation.

David R. Boone, Principal Investigator,
Portland State University.

Grant #: 99-38
Grant Funding: $71,000
Term: August 1, 2000 – February 1, 2001
PIER Subject Area: Renewable Energy Technologies

Legal Notice

This report was prepared as a result of work partially sponsored by the California Energy Commission (Commission). It does not necessarily represent the views of the Commission, its employees, or the State of California. The Commission, the State of California, its employees, contractors, and subcontractors make no warranty, express or implied, and assume no legal liability for the information in this report; nor does any party represent that the use of this information will not infringe upon privately owned rights. This report has not been approved or disapproved by the Commission nor has the Commission passed upon the accuracy or adequacy of the information in this report.

Inquires related to this final report should be directed to the Awardee (see contact information on cover page) or the EISG Program Administrator at (619) 594-1049 or email eisgp@energy.state.ca.us.

Acknowledgements

The Inventor wishes to express his appreciation to:

- NIST for it's evaluation #707[1] and the Department of Energy Invention and Innovation program for partially funding this verification project through Grant #GO10300[2].
- Dr. David R. Boone taking for taking on this project and his persistence in solving equipment failures and related problems.
- Dr. Boone's graduate students, Ms. Jill Mckucki and Mr. Martin Sobieraj, for their diligence and patience exhibited in operating the prototype reactors and doing the gravimetric and chemical analyses.
- his Syracuse University Ph.D. advisors, Dr. M.C. Rand (former Editor of Standard Methods - now retired) and Dr. J.C. Jennett (President of Texas A&M International University), for their persistent support of this work.
- Dr. Douglas V. Keller (inventor of liquid coal and clean coal process) for his constant encouragement and leadership.
- his family for enduring his relentless obsession with unlocking the true potential of anaerobes over the past 15 years.

TABLE OF CONTENTS

ABSTRACT 1

EXECUTIVE SUMMARY 2

INTRODUCTION 3

PROJECT OBJECTIVES 4

PROJECT APPROACH 4

- **Prototype Reactor Designs** 4
- **Fluid Transport** 5
- **Sampling and Analytical Methods** 7
- **Preliminary Testing** 7
  - *Feed preparation and storage.* 7
  - *Feed Sludge Characteristics.* 8
  - *Pressure-leak tests.* 8
  - *TAP Computer control tests* 9
- **Start-Up Operation** 9
  - *Conventional CSTR.* 9
  - *The Anaerobic Pump* 9
- **Steady State Testing** 9

PROJECT OUTCOMES 10

- **Performance Comparison** 11
  - *Gas Production.* 11
- **Mass Balance Comparison** 12
  - *COD transformations.* 12
  - *Nitrogen transformations* 12
- **Kinetics Comparison** 20
  - *Kinetics Discussion.* 21

CONCLUSIONS 22

RECOMMENDATIONS 23

PUBLIC BENEFITS to CALIFORNIA 24

- *Energy Savings.* 24
- *Environmental Savings.* 24
- *Economic Savings* 25
- *Potential Yearly Savings* 26

DEVELOPMENT STAGE ASSESSMENT 26

- **Marketing** 27
- **Engineering/Technical** 29
- **Legal / Contractual** 30
- **Environmental Safety & Risk Assessment / Quality Plans** 30
- **Production Readiness & Commercialization** 30
- **Public Benefits / Costs** 31

GLOSSARY 31

REFERENCES 32

LIST OF FIGURES

Figure 1. The Anaerobic Pump Prototype
Figure 2. Schematic diagram of the Anaerobic Pump showing sampling ports
Figure 3. TAP vs. CSTR vs. Literature: Methane Production vs. Retention Time
Figure 4. Analytical Data from Conventional CSTR Steady State #1
Figure 5. Analytical Data from TAP Steady State #1
Figure 6. Analytical Data from Conventional CSTR Steady State #2
Figure 7. Analytical Data from TAP Steady State #2
Figure 8. Analytical Data from TAP Steady State #3

LIST OF TABLES

Table I. TAP and CSTR Pumping Rates
Table II. Composition of the 50:50 Mixture of Municipal Sludge
Table III. Steady State Testing Plan Summary
Table IV. Comparison of System Performance Characteristics
Table V. Comparison of Steady State Mass Balances
Table VI. Kinetic Constants for the Anaerobic Pump and CSTR
Table VII. Environmental Savings for a 15 ton/day TAP unit
Table VIII. TAP Development Assessment Matrix
Table IX. Estimate of California Market Size
Table X. Estimate of California Customer Units
Table XI. CHP Unit Capital Cost Comparison
Table XII. Project Technical Objectives and Outcomes
Table XIII. Value of Annual Public Benefit
Table XIV. Comparison of Benefit/Cost Ratios for all Stakeholders

ABSTRACT

Methane fermentation has advanced with the development of the ***Anaerobic Pump*** (TAP) process. TAP utilizes the penetrating capability of biogas and the adsorptive capacity of organic solids to plasticize and hydrolyze the "non-digestible" mass. Prior original work showed that this process is capable of nearly completing solids hydrolysis with an ordinary mixed culture of anaerobes.

This report contains the findings of an independent prototype-testing of the ***Anaerobic Pump*** process. This process has been shown to convert solid organic matter to methane about 3 times faster than a comparable conventional complete mix by stirring digestion unit (CSTR). The analysis shows that TAP stage II accomplished a fermentation hydrolysis rate 10 times a typical CSTR rate and greatly improve the extent of solids conversion to methane. At room temperature (20°C), TAP transformed 77% of the feed COD to biogas methane. A conventional CSTR unit, operated sided by side with TAP, accomplished an expected 23% COD reduction. At room temperature and a hydraulic retention time of only 6 days, TAP Stage II reactor produced methane at a phenomenal rate of 2.4 liters per liter of reactor space. This methane was derived from mass that is considered to be "non-digestible" by conventional digestion. Kinetic analysis of the TAP Stage II reactor showed a 10 fold increase in the Monod maximum growth rate to $\hat{m}$ = 2.0 days^{-1}, and drop in the half maximum velocity coefficient to K_s = 0.75 gm COD/liter. These values indicate very rapid solids hydrolysis and rate limitation by soluble substrates or intermediates. This data analysis verifies the original findings.

TAP is a proprietary technology that will have an enormous impact on the Biomass to Energy industry. TAP is easily configured as a combined heat and power process (CHP). The combination of increased speed and near complete solids conversion is useful in electrical generation applications where ease of operation, low maintenance, rural siting and power dispatchability is very desirable. The vast majority of non-forestry biomass is too wet to burn and mankind will need to rely more heavily on biomass resources as fossil fuels deplete. California will be a major beneficiary since it such a large biomass state.

Keywords List: The Anaerobic Pump, TAP, total volatile solids (TVS) destruction, complete Chemical Oxygen Demand (COD) reduction, complete enzymatic hydrolysis, anaerobic digestion, advanced nitrogenous breakdown, combined heat and power (CHP)

EXECUTIVE SUMMARY

Anaerobic digestion, as it is currently practiced, is limited in application because incomplete hydrolysis severely limits the extent of Methanogenesis. This limitation is due to the resistance to degradation of many complex organic substances in wet biomass.

In 1980, Dr. Keith A. Schimel invented a new continuous flow, continuous culture anaerobic process which was shown to nearly complete solids hydrolysis with an ordinary mixed culture of anaerobes. The design concept of **the *Anaerobic Pump*** (TAP) is based on utilizing the product gases to plasticize the residual mass. In prior tests, TAP was able to more than double gas production and increase the speed dramatically during digestion of waste activated sludge (WAS). In addition, this test data showed as much as 90% VS reduction and 80% COD reduction is achievable if TAP is operating at optimum.

This report describes the results of independent tests on the ***Anaerobic Pump***. The objective of this project is to compare the methane fermentation test data of two prototypes of the same volume (30 liters) under the same conditions. Both units were operated side by side, the ***Anaerobic Pump*** and a conventional, single-stage, a completely mixed by stirring (**CSTR**) reactor. Both systems were operated at the same low temperature (20°C), and fed the same substrate at the same loading rates. A series of three steady state experiments were completed and the analytical data from both systems were directly compared.

The test data clearly shows the superior performance of the ***Anaerobic Pump***. The CSTR peak specific gas and methane production rates were 0.4 and 0.2 L/L-day, respectively. TAP specific gas and methane production rates of 1.32 and 0.78 L/L-day were recorded at only a 6-day hydraulic retention time (HRT). Methane yields were 0.26 and 0.49 m^3 CH_4/kg VS added for the CSTR and TAP systems, respectively. The conventional CSTR accomplished a 26% and 23% TVS and total COD reductions, respectively. TAP achieved 61% and 77% TVS and COD reductions, respectively. Solids and COD balances showed a recovery of almost all the solid COD reduction as biogas in both units. The 15-day HRT results for TAP showed that 52% of the influent solid nitrogen appeared as ammonium in the effluent. The solids capture for this TAP Stage I prototype was lower than expected (~70%), due to an intermittent feeding method that had to be adopted to accommodate low feed rates. If Stage I can effectively capture the feed solids, then TAP Stage II can convert the remaining substrate at the phenomenal rate of nearly 10 times typical CSTR rates.

The results and conclusions of this project confirm and verify earlier findings. Overall, TAP can convert organic solid matter to Methane between two (2) and four (4) times faster (depending on loading) than a comparable CSTR unit. Only TAP is capable of the biological conversion of non-digestable mass. The ability to rapidly convert nearly the entire organic solid fraction while it's immersed in water at room temperature will have an enormous impact on the BioEnergy industry. This work is based fundamental insights that further the development of microbial-based hydrolysis methods and greatly improve biomass to methane (BTM) conversion systems for energy production applications.

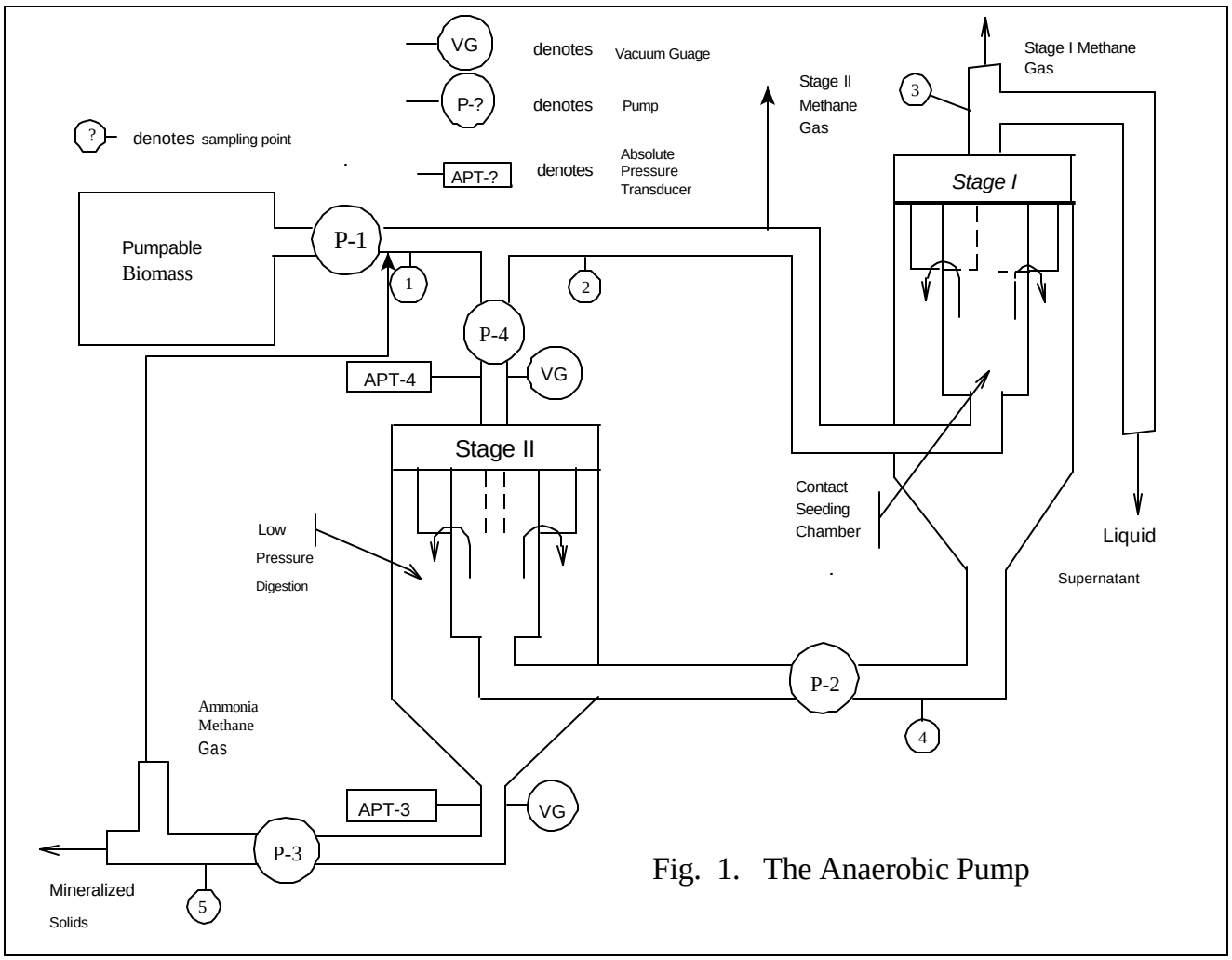

Fig. 1. The Anaerobic Pump

INTRODUCTION

Anaerobic Digestion (AD)[3], as it is currently practiced, is limited in application because incomplete hydrolysis severely limits the extent of Methanogenesis. Despite this limitation, many industries around the world use AD to recover methane from process residuals to displace on-site energy requirements[4].

The ***Anaerobic Pump*** (TAP) is a vast improvement in AD technology. The primary goal of TAP is to rapidly complete hydrolysis and Methanogenesis of wet solid substrates. The benefits of achieving this goal are two fold. First, there is reduced cost of operation through the most efficient use of input resources and a large increase in profitability from increased methane/energy production. The secondary benefit is the elimination of the need for recycling organic solids to the land and often in violation of extensive regulations to protect environmental quality and human health. Instead, these large quantities of renewable resources could be of great importance in reducing greenhouse gas (GHG) and acid gas emissions associated with fossil fuel power generation. Full deployment could reduce these GHG emissions equivalent to one half the current U.S. biomass-electric generating capacity[10]. This technology can provide the Water, Industrial and Agricultural sectors of the California economy with a more profitable, simple and low cost method of extracting energy from wet organic solid residuals.

PROJECT OBJECTIVES

The purpose of this project was to independently test an innovative patented process, ***Anaerobic Pump***[5-9], that can complete solids hydrolysis and recover the energy content (as Methane) from wet biomass. The patent cover pages are given in Appendix I (pages 2-6). This is a prototype-testing project specifically designed to verify previous TAP prototype and development work. The objective is to quantitatively determine the increased gas production, kinetics and solids conversion efficiency of TAP compared to a conventional single-stage, complete mix by stirring (CSTR) digester design.

PROJECT APPROACH

The two prototypes, the ***Anaerobic Pump*** (TAP) and a conventional, single-stage, complete mix by stirring (***CSTR***) digester were operated side by side at the same culture temperature and loading levels. This prototype comparison method focused on two important points; (1) the degree of solids destruction and methane production, and (2) the kinetic rate of solid conversion to biogas. For the first point of critical information, the focus is on the loss of volatile matter (organic) as a particle traverses through each stage of each process. For the second point of critical information, the focus is on how fast the solid mass disappears as an organic particle traverses through each stage of each process. The amount of methane produced by each process is important to compare the prototype mass and energy balances.

Prototype Reactor Designs

Both prototypes were designed to provide the choice of maintaining the desired culture temperature via temperature control room or by circulating water at 20°C through the reactor water jackets, or both.

Conventional CSTR.

This unit was designed to be a standard complete mix by stirring (CSTR) reactor with no recycle. This CSTR prototype is a Plexiglas constructed, water jacketed vessel with a culture volume of 30 liters. Digester contents are continuously mixed at 100 rpm with a stainless steel (SS), 3-bladed propellers fixed on a central SS shaft at distances of 4 and 10 inches from the reactor bottom. The SS shaft was attached to the shaft of a variable-speed electric motor by a flexible coupling. The shaft passes through water-cooled, double-ceramic, Crane friction seals placed within a custom-fabricated shaft-seal housing. Most of the world's estimated 10 million anaerobic digesters are this standard design or some close modification.

The Anaerobic Pump.

As shown in Figure 1, TAP Stage I and Stage II bioreactors are similar in design. Both are cylindrical vessels made of Plexiglas construction, water jacketed vessels, and are operated in an upflow mode. Each reactor has a circular inner reaction chamber surrounded by a cone-bottomed outer chamber. The influent feed is introduced into the bottom of the inner chamber. TAP Stage I had a culture volume of 22.6 liters, whereas TAP Stage II had a culture volume of 7.4 liters. The inner chambers of both reactors are compartmentalized to separate the reaction and settling functions and enhance the solids retention time (SRT).

The ***Anaerobic Pump*** is comprised of a Stage I thickener-bioreactor that is operated in tandem with a Stage II pressure-swing bioreactor. The Stage II low pressure phase is designed to maintain the solid-gas suspension[11] and overcome the poor liquid-to-gas mass transfer common to anaerobic environments[12].

As depicted schematically in Figure 1, municipal raw sludge stored in a mechanically mixed, refrigerated feed reservoir is pumped to Stage I. The stream of raw feed sludge is continually inoculated with Staged-II bioreactor effluent before it is introduced into a bottom inlet of the central chamber–designated as the Stage I "contact seeding chamber" as shown in Figure 1. Stage I effluent exits from a top port of this reactor, while a "concentrated" stream of thickened, digested sludge is withdrawn from the bottom cone of the outer chamber. Stage I effluent is pumped into bottom inlet of the central chamber of the Stage-II upflow bioreactor. Digested effluent from the Stage I reactor was substrate for Stage-II digesting culture. Stage II bioreactor overflow is pumped into the feed line conveying raw sludge to Stage I bioreactor thus completing the closed loop circulation between the two reactors. Stage II underflow of mineralized solids is pumped out of the cone-bottomed outer chamber to form the second recycle stream to Stage I. A schematic of the Laboratory setup is shown in Figure 2. Figures 1 & 2 show the location of all five of TAP sampling points.

Fluid Transport

As shown in Figure 1, feeds and effluents are transported into and out of the two TAP reactors by small tubing pumps. The pump operation is controlled by a computer that receives electronic signals from in-line pressure transducers installed at the shown locations within the closed loop. A digital computer controls the operation of the pumps P-3 and P-4 to achieve the selected high or low-pressure level, and maintain the Stage-II microbial culture at the pressure set point for a precise duration. In this way, operation of TAP is automatically controlled 24 hours a day, seven days a week.

Four Cole-Parmer Peristaltic metering pumps (Masterflex) were specified in consultation with Cole Parmer Company experts. However, the smallest pump flow rate was too high to meet the low loading specifications of the testing protocol. It was evident in early tests that the influent pump would have to be operated intermittently to meet the daily loading rate. Table I shows the intermittent pumping program used in each test. Normally, discontinuous pumping of bioreactor feeds is acceptable because frequent intermittent feeding can be reasonably equivalent to continuous feeding. But, since TAP stage I is a partially fluidized bed design, it was anticipated that the fluctuating influent flow velocity might negatively impact the solids-liquid separation (solids capture) function in TAP Stage I. This was born out in the results. The lower solids capture (~70%) is consistent through all three steady states. Frequent intermittent feeding was not expected to significantly impact the performance of the CSTR digester unit because the feed is quickly distributed by constantly mixing the tank contents and there is no solids liquid separation or recycle.

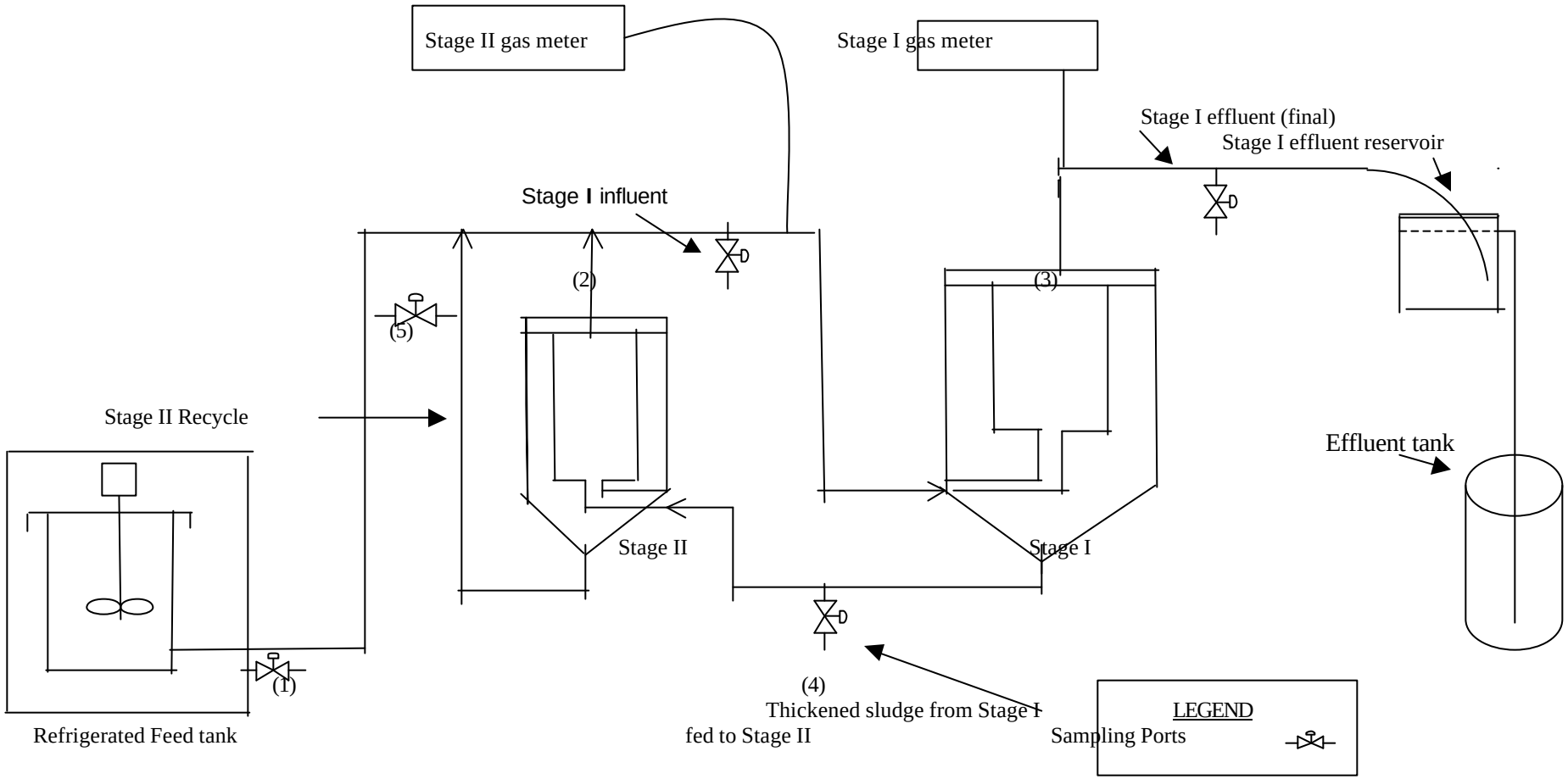

Figure 2. Diagram of Anaerobic Pump with Sampling Points.

Table I. TAP and CSTR Pumping Rates

Pump[1]/Parameter	Rate	Feeding freq	Flow Rate (Q, L/day)	HRT[4] (Days)	OLR[5] (Kg TVS/m^3-day)
Pump P-1 (SS-1)[2]	6 times/day	333 ml/4min	2.0	15	0.8
Pump P-1 (SS-2)	8 times/day	666 ml/4min	5.0	6	2.0
Pump P-1 (SS-3)	8 times/day	999 ml/4min	7.5	4(3)[4]	3.0 (4.)[3]
Pump P-2	Continuous	-	40		
Pump P-3	Variable[3]				
Pump P-4	Variable[3]				

(1) Pump P-1 influent flow rates are identical for TAP and CSTR
(2) P-1 on/off flow rate schedule is controlled be a wall socket timer.
(3) TAP Stage II is pressurized or depressurized by running P-3 and P-4 at computer controlled variable speed until the desired level of low or high pressure is reached.
(4) HRT means Hydraulic residence time (days), the CSTR SS#3 operated on a 3-day HRT and TAP SS#3 operated on a 4-day HRT
(5) OLR means Organic Loading Rate (kg TVS/m^3-day)

Sampling and Analytical Methods

The TAP ports shown in Figures 1 & 2 and the input and output of the CSTR unit were sampled on a weekly basis. The liquid samples were analyzed for Solids (Total and Volatile), TCOD & SCOD, pH, TKN, and free Ammonia. The gas phase was analyzed for volumetric production and gas fractionation was accomplished via Gas Chromatography. Gravimetric and wet chemical methods for Solids, Chemical Oxygen Demand (TCOD and SCOD) and Total Kjeldahl Nitrogen (TKN) were performed in accordance with the current edition of Standard Methods[13].

Preliminary Testing

The preliminary testing phase consisted of (1) determining feed characteristics, (2) tests on pressure program controls, and (3) calibrations on pump flow rates and rocker and tri-tube gas meters.

Feed preparation and storage.

The conventional CSTR and the ***Anaerobic Pump*** systems were fed with municipal sludge pumped from a refrigerated feed reservoir. The contents of the reservoir were mechanically mixed. These feeds were collected from a Durham Wastewater Treatment Plant, a municipal STP located in a southeastern suburb of Portland Oregon. As collected, the sludge was a mixture of primary and waste activated sludge (PS and WAS) in about a 50:50 volume ratio. The mixture was brought to the lab and diluted with ordinary tap water to obtain a TS concentration of about 1.5 wt%. During the period of preliminary testing period, it was observed that the VS content of the refrigerated sludge did not change significantly during the first three weeks of storage at 4°C.

Feed Sludge Characteristics.

The 50:50 mixture of Waste Activated Sludge (WAS) and Primary Sludge (PS) is a real world substrate. A significant variability in feed physical and chemical properties was anticipated. The raw sludge (as collected at the STP) had been degritted, but contained a significant oil and grease component. It was expected that oil and greases would interfere with solids separation in TAP Stage I. Over the year of prototype testing, the average physical chemical characteristics of feed substrate collected from the refrigerated feed reservoir are presented in Table II.

Table II. Composition of the 50:50 Mixture of Municipal Sludge

Sample Parameter	Number of Samples[1]	Mean, C	Standard Deviation, F
TS (wt % of sample)	82	1.56	.3129
VS (wt % of sample, (% of TS))	33	1.14 (0.73)	0.156
Total COD (TCOD, mg/L)	15	15,047	1240
Soluble COD (SCOD, mg/L)	9	1725	600
pH	32	6.7	.2
TKN (mg/L-N)	19	1026	96
Free NH_3-N (mg/L-N)	19	202	51

[1] Feed sludge was prepared by diluting the 50:50 mixture of PS-WAS sludge with tap water to a TS concentration of approx. 1.5 wt %. Only the feed samples analyzed during the six steady states were considered in this table.

The volatile solids (VS) content of the mixed feed was about 73% (of TS). About 88% of the TCOD of the mixed feed was particulate. Since nearly all the incoming COD is particulate COD then nearly all the methane produced will be derived from the conversion of particulate COD. Table II shows that 5 wt% of the feed total solids was organic nitrogen, and 7 wt% of the VS was nitrogenous material indicating a 28 wt% of the feed VS was proteinaceous in nature. In comparison, Nitrogen analysis of TAP Stage II feed showed that 80 wt% of the nitrogenous material was organic solid, the balance being soluble ammonia nitrogen. The feed characteristics shown in Table II were the same for both prototypes.

Pressure-leak tests.

TAP Stage I and Stage II reactors were tested for leaks by filling them with water, closing the inlet and outlet valves, and pumping in water to develop a pressure of 22 psia (~1.5 atmospheres). Leaks were fixed so that the reactors could hold the applied pressure of 1.5 atmospheres for 24 hours. Stage II bioreactor was also subjected to a small vacuum of 18 in Hg; it dropped to 17.5 in Hg in 24 hours. A computer program was written and used to carry out the pressure tests automatically with computer logging. The test program first applied 8 hours of low pressure (7-8 psia) followed by 8 hours of high pressure (22 psia) and the results digitally collected in the computer. The conventional CSTR digester was also leak tested to hold a pressure of 19 inches Hg of water pressure.

TAP Computer control tests.

A computer-control program was written to control TAP process pressure changes and pump flow rates. This control program was tested to determine the integrity of the transducer/pump operating system. Adjusting pumping speeds of P-3 and P-4 (Fig. 1), as needed, changes the pressure applied to the culture until a set level is reached and maintained for a desired period of treatment. The high pressure is maintained for an optimum duration after which the reactor pressure is released and low pressure reinstated. The depressurization-pressurization cycle program is repeated continuously.

Start-Up Operation

Conventional CSTR.

The CSTR digester was started with 10 liters of screened primary sludge and 25 liters of digested-sludge inoculum collected from the Durham Wastewater Treatment Plant located in the Portland Metropolitan Area, Portland Oregon. The inoculum was obtained from a mesophilic (35°C) digester. Continuous feeding of municipal sludge was started after a period of selection and acclimation of organisms at 20°C. Continuous-flow operation was started at an HRT of 20 days and an OLR of 0.55 kg VS/m^3-day. The CSTR reached the first steady state level in about 4 months.

The Anaerobic Pump.

TAP Stage I bioreactor was filled with screened digested sludge inoculum obtained from the same Durham Wastewater Treatment Plant. It was fed with raw municipal sludge at a flow rate of 1.0 liters/day. Under this condition the bioreactor was at an HRT of 29.4 days and an OLR of 0.320 Kg VS/m^3-day. The Stage II bioreactor was similarly filled with screened digested sludge inoculum obtained. The mesophilic cultures were left in a batch mode of operation for about 1 month to select and adapt a population capable of thriving on the municipal sludge mixture at 20°C. Thereafter, increases in feeding of raw sludge in small step increments were made as culture development and gas production progressed with time. TAP system reached the first steady state level in about 4 months.

Problems and Remedies

Several weeks after the preliminary testing was completed both units developed problems related to solids clogging. This is a common problem in continuous flow solids digestion prototype work. Clogging of small tubing lines interrupts flow. The solution was to makeup the feed volume lost during flow interruption at the end of each day. This amount normally was varied between 0 and 1/2 liter per day. The actual daily makeup amounts are recorded along with the raw gas data included in the Appendix II.

Both reactor systems were poorly fabricated. The CSTR developed a problem of clogging inside the reactor at the outflow port and periodic rapid discharges would cause a siphon to develop and part of the contents would be suddenly expelled. A siphon interrupt apparatus was installed at the CSTR discharge port to remedy this problem. TAP Stage II developed air leaks in the Stage II reactor and the intake manifold. Using shaving cream to detect leak locations, eventually the leaks were located and patched. The detection and correction efforts consumed the first four months of project time.

Steady State Testing

Both Prototypes were submitted to the same set of steady state conditions as summarized in Table III. Both prototypes were placed in a walk-in constant-temperature environmental chamber to maintain the required

culture temperature of 20°C. A steady state was considered established when gas production and effluent pH held relatively constant over three (3) hydraulic retention (HRT) periods.

Table III. Steady State Testing Plan Summary

Task / Days	Operating Temperature (^{o}C)	Hydraulic Residence Time (days)	Steady State Duration (days)	Organic Loading #VS/day/ft^3	TAP Cyclic Pressure Range (Torr.)
SS#1	20	15	45	0.05	380-1140
SS#2	20	6	20	0.125	380-1140
SS#3	20	3	10	0.25	380-1140

SS#1 means Steady State #1
SS#2 means Steady State #2
SS#3 means Steady State #3

PROJECT OUTCOMES

All three steady states shown in Table III were successfully completed. All raw data and statistical analysis are given in the Appendix II. The averaged results for each parameter are shown in graphical form in the following Figures 4-8. The CSTR steady State #3, the highest loading, exhibited all the classic symptoms of process failure by organic overload. The CSTR failure data is not presented as a Figure but this data is included in the Appendix II.

A direct comparison of the prototype performance parameters is given in Table IV. The ***Anaerobic Pump*** shows a superior performance for volatile solids reduction, Methane productivity and the extent of Nitrogen conversion. No attempt was made to optimize the performance of TAP during these tests. Instead, operational parameters were maintained as consistent as possible over all steady states so that a comparative set of kinetic parameters could be derived.

Performance Comparison

Gas Production.

The gas-production-rate (GPR) data for TAP and CSTR-digestion systems are compared in Table IV. The total daily gas production rate (GPR) of 15-40 liters per day from TAP was 129%-329% higher than the corresponding CSTR gas production rates. The specific gas production rate from TAP Stage II was as much as 10 times the specific gas production rate of the CSTR. Figure 3 shows a graphical comparison of TAP gas production to literature data (O'Rourke [14]) and this project CSTR gas production. Note TAP's broad operating range in short hydraulic residence times (6-9 days) at only room temperature. This is desirable for unmanned industrial applications.

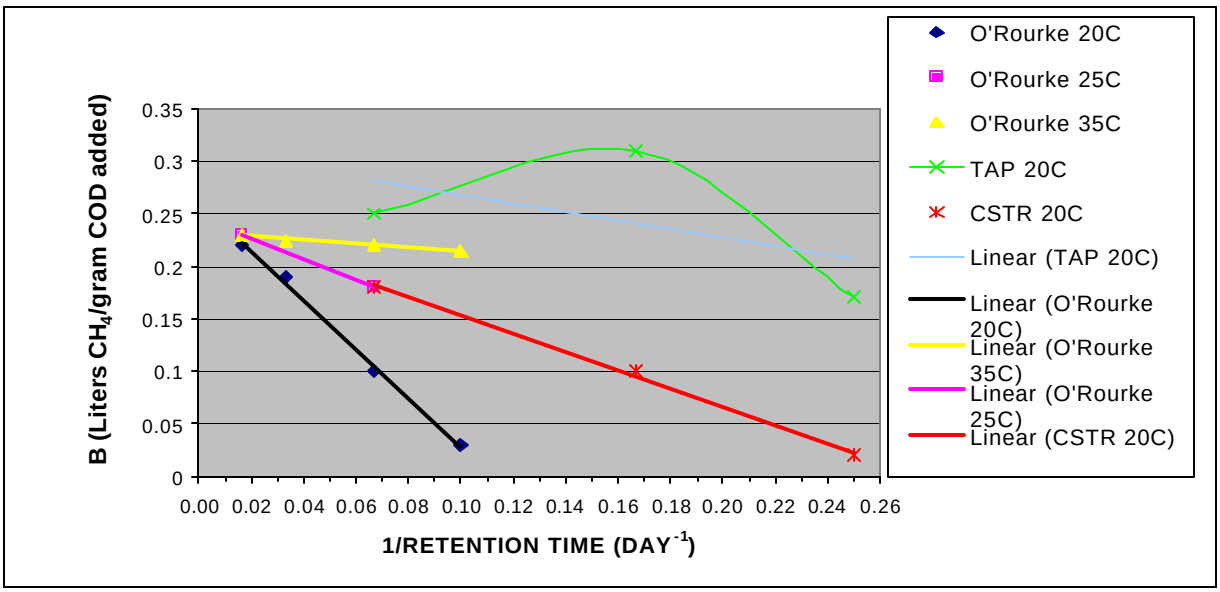

Figure 3. TAP vs. CSTR vs. Literature: Methane Production vs. Retention Time

The CSTR gas production was surprising. It is not known how the conventional unit achieved a GPR of 11 liters/day at a hydraulic retention time of only 6 days (steady State #2). Figure 3 shows that the prototype CSTR at 20°C prototype operated as well as conventional unit operating at 25°C as reported in the literature (O'Rourke[4]). Non-ideal mixing is suspected of causing liquid phase short-circuiting and solid phase accumulation within the reactor. Mixing propellers wrapped with stringy materials can drastically effect the mixing efficiency of propeller mixers. The resulting longer than expected solids retention time could account for the greater gas production at the shorter hydraulic residence time.

Solids transformation.

Even with the enhanced steady state performance, the mass balance evaluation (Table V) showed the CSTR unit performed pretty much as expected with a 26% volatile solids reduction and a Methane yield of 0.2 liters per gram TVS added. By comparison, the mass-balance calculations showed that TAP achieved a 61% TVS reduction and a Methane yield of 0.4 liters gram TVS added, which is remarkable for such as degradation-resistant substrate.

The TAP TVS reduction is lower than previously experienced due to the lower solids capture of (70%) in the Stage I reactor. According to Table I, the intermittent feed pulse only last for 4 minutes. However, the interstitial velocities are very large which disturbs the fluidization of the upflow bed. Solids capture remained about the same regardless of loading which suggests that loss must be do to the rapid increase in interstitial velocities during pulse feeding events. Even so, the TAP effluent TS concentrations were comparatively low indicating the high solid reduction efficiencies. TAP achieved about 2.4 times more volatile solids reduction than the conventional CSTR unit in the same amount of time.

Mass Balance Comparison

Five mass balances for solid COD and Nitrogen were performed on the prototype data given in the previous section. These are given in Table V. The performance of TAP Stage II during steady state #2 was outstanding. The mass balances closed reasonably well. Gravimetric analysis showed that most variability during steady states with high gas production. Gathering solid slurry samples from TAP Stage II while it was producing a GPR of 4 liters/liter of reactor volume proved to be very difficult.

COD transformations.

The CSTR digester exhibited average COD conversion efficiencies of about 24% for the two steady states. According to the mass balance results shown in Table V, about 22% of CSTR feed TCOD was converted to Methane. By comparison, an average of 77% of the feed TCOD was converted to methane by TAP system. Throughout the testing period the pH of TAP system effluent was above 6.5 and SCOD concentrations of Port 3 samples (effluent) were in the 1000-2000 ppm range. This is evidence of smooth operation with high system COD reduction. Good COD balances were obtained for TAP with Steady State #2 showing nearly 96% of the influent COD ending up in the gas phase. During this steady state, the reactor operation achieved the bubbling bed optimum operational mode.

Nitrogen transformations.

The conventional CSTR digester data showed some evidence of nitrogenous compound breakdown, but the values are questionable since CSTR systems are known for little organic-N removal. Conversely, TAP achieved high TKN and organic nitrogen removal efficiencies. The low-pressure environment created in TAP stage II stimulates nitrogenous matter degradation as evidenced by the observed degradation efficiency of 52% at an HRT of 15 days. As the organic loading increases (HRT decreases), however, TAP nitrogenous breakdown decreases until at a hydraulic loading of 4 days very little nitrogenous breakdown is observed.

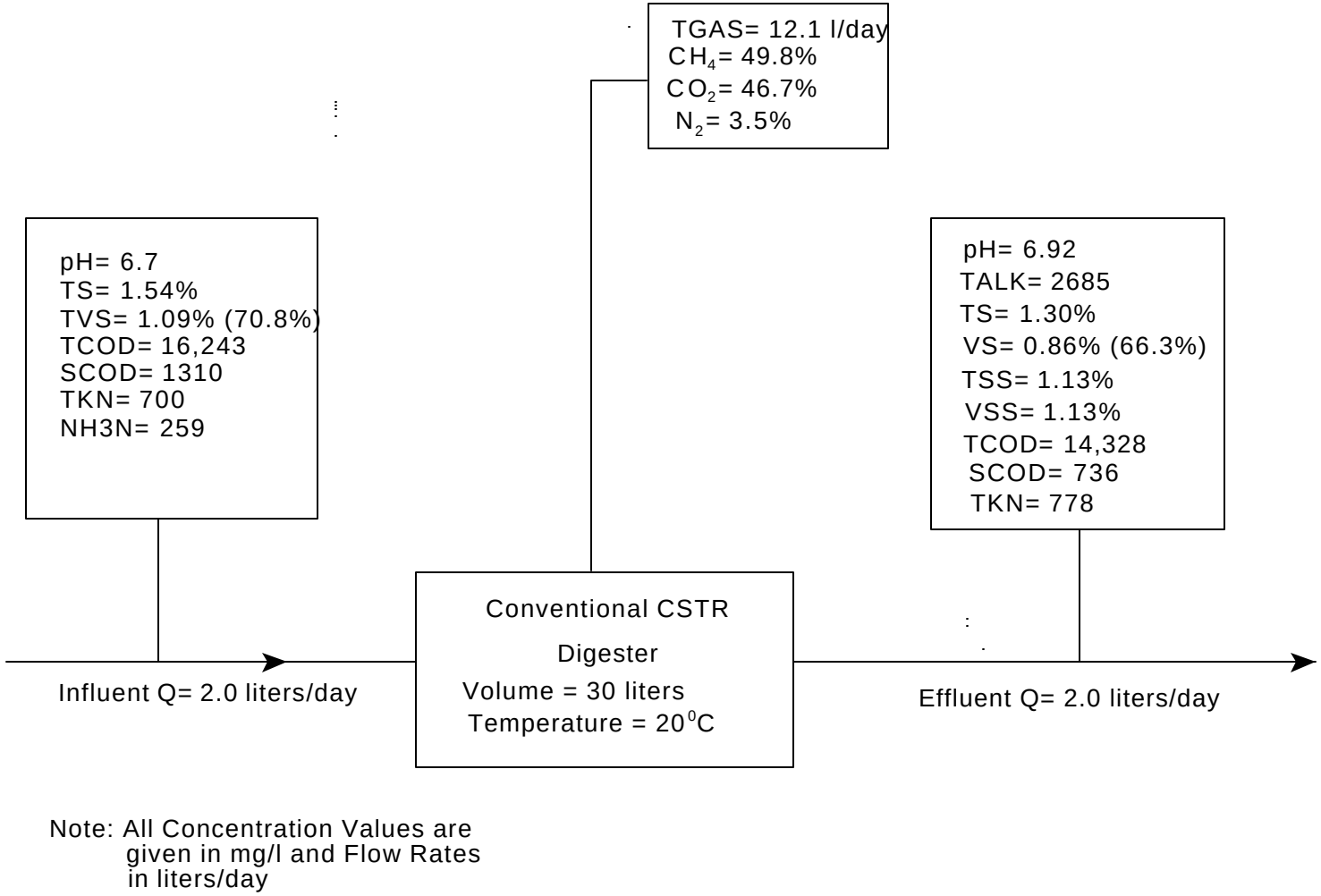

Note: All Concentration Values are given in mg/l and Flow Rates in liters/day

Figure 4. Analytical Data from Conventional CSTR Steady State #1

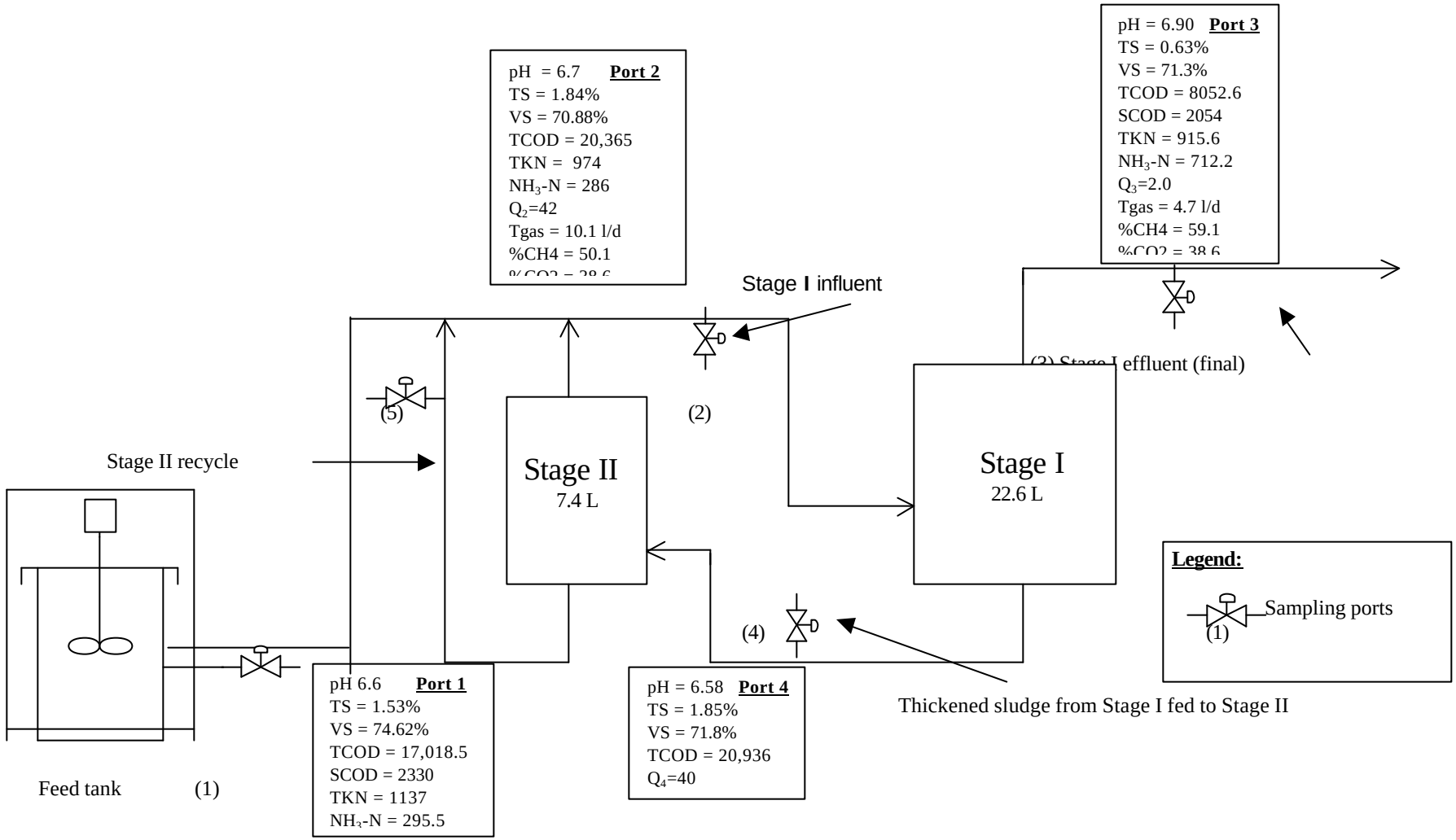

Figure 5. Sampling Port Analytical Data for the Anaerobic Pump Steady State #1[1].

[1] All concentrations are expressed in mg/L, except for TS (wt % of sample), VS (wt % of TS dry) and TSS (wt % of sample).

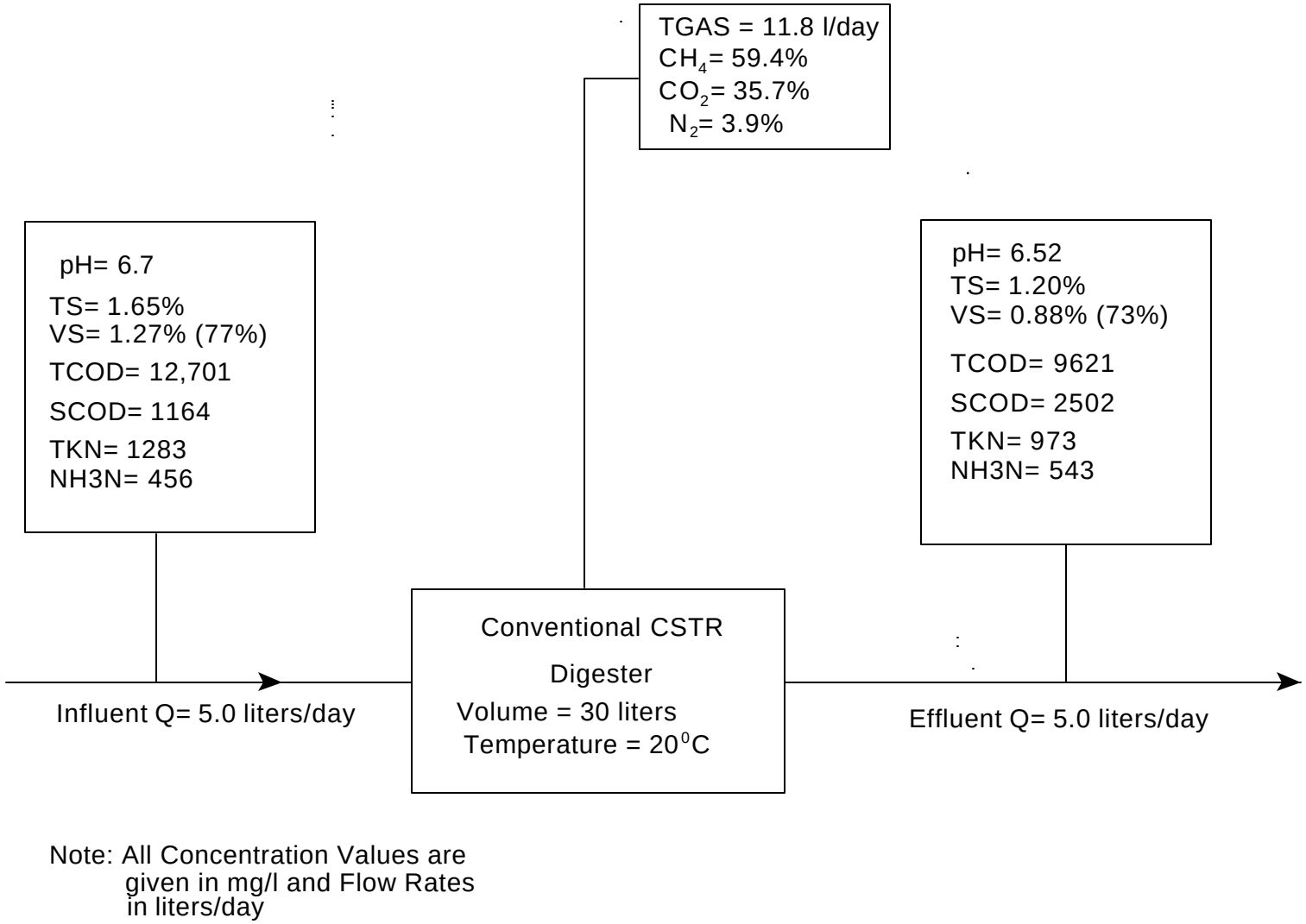

Note: All Concentration Values are given in mg/l and Flow Rates in liters/day

Figure 6. Analytical Data from Conventional CSTR Steady State #2

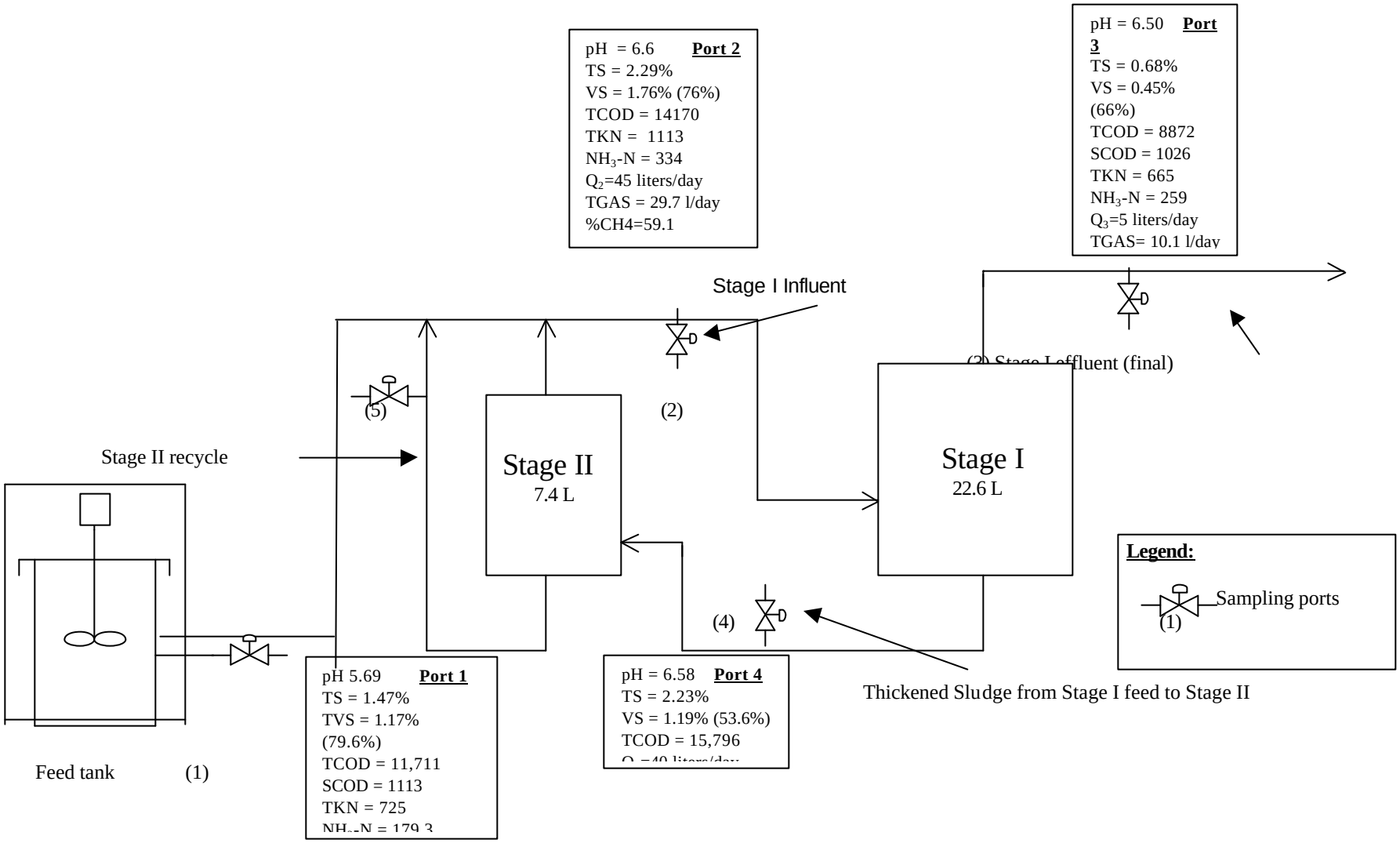

Figure 7. Sampling Port Analytical Data for the Anaerobic Pump Steady State #2[1].

[1] All concentrations are expressed in mg/L, except for TS (wt % of sample), VS (wt % of TS dry) and TSS (wt % of sample).

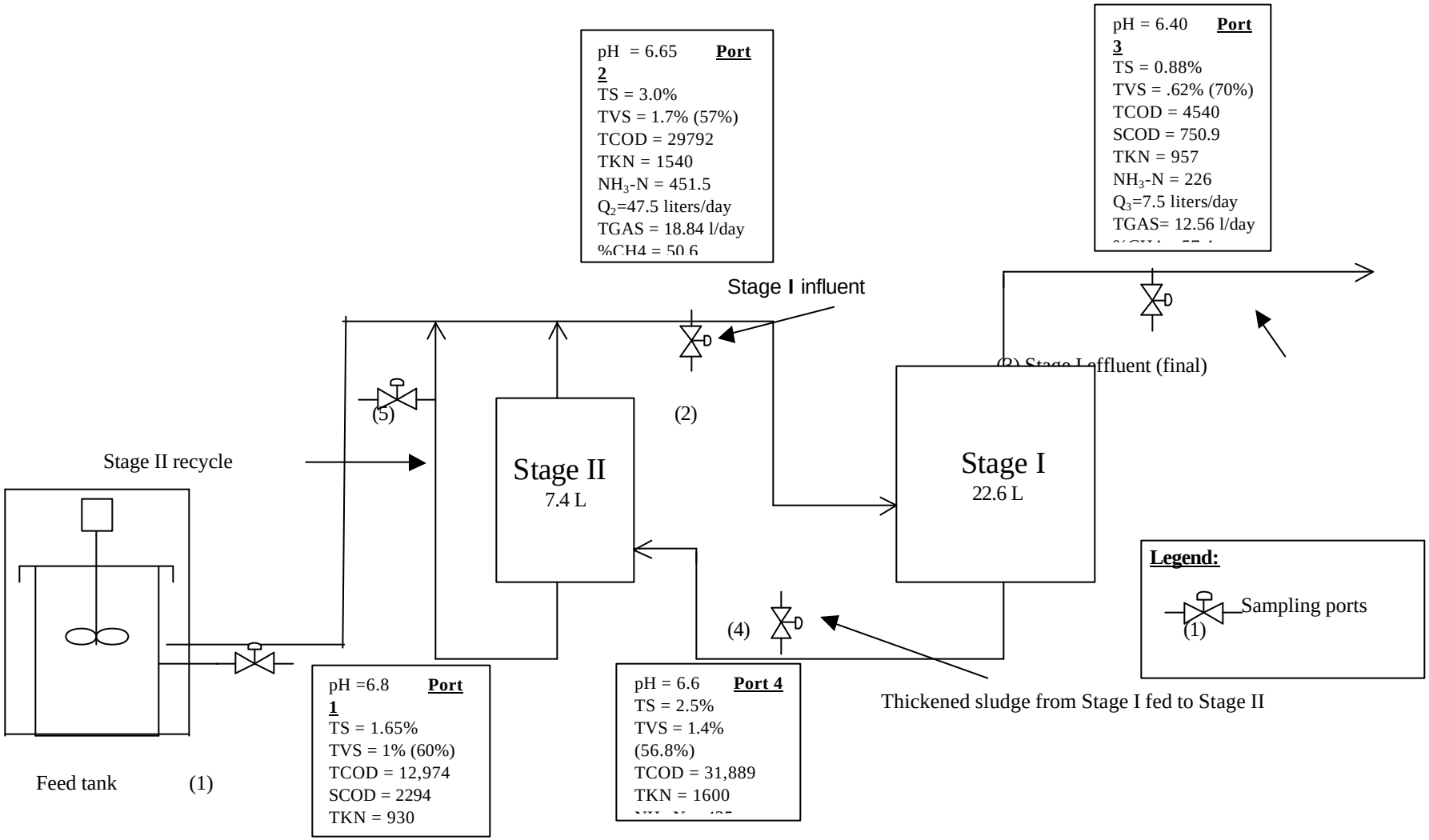

Figure 8. Sampling Port Analytical Data for the Anaerobic Pump Steady State #3[1].

[1] All concentrations are expressed in mg/L, except for TS (wt % of sample), VS (wt % of TS dry) and TSS (wt % of sample)

Table IV. Comparison of Prototype Performance Characteristics

Parameter	**Conventional CSTR Digester[1]**			***Anaerobic Pump[2]***								
Substrate	50:50 Mixture of Primary and Waste Activated Sludges											
Temperature (^oC)	20			20								
Organic Loading (#/ft^3-day)	0.05	0.125	0.25	SS1=0.05			SS2=0.125			SS3=0.187[3]		
Hydraulic Retention Time, HRT (days)	15	6	3	15			6			4[3]		
Solids Residence Time, 2_c[8] (days)	15	6	3	48.8			10.5			31.7		
System &Volume (liters)	CD 30			Stage I 22.6			Stage II 7.4			Total (I+II) 30		
Steady State #	SS1	SS2	SS3	SS1	SS2	SS3	SS1	SS2	SS3	SS1	SS2	SS3
Methane Yield: (liters Methane /gm TVS added)	0.26	0.11	Fail[6]	0.1	0.1	0.07	0.28	0.3	0.09	0.38	0.40	0.16
Specific Gas (liters total gas/liter-day)	0.4	0.39	~0.0	0.21	0.44	0.56	1.47	4.0	2.54	0.52	1.32	1.05
Methane Product (liters CH_4 /liter-day)	0.2	0.23	~0.0	0.11	0.26	0.31	0.74	2.4	1.28	0.28	0.78	0.56
Total Volatile Solids Red. (%)	26.4	30	~0.0	28	30	25	32	31.5	30	60	61.5	55
Total COD Removed (%)	23.1	24	~0.0							76	96	59
Total Nitrogen Removal (%)	?[4]	?	~0.0							52	19.2	3.8
Total Gas Production and Composition												

Parameter	Conventional CSTR Digester[1]			*Anaerobic Pump*[2]								
Total Gas Product (liters/day) [2]	12.1	11.86	Fail[6]	4.7*	10.1	12.56	10.9*	29.7	18.84	15.6	39.8	31.4
Methane (%)	49.8	58.6	64	50.5	59.1	57.4	50.1	59.1	50.6	54.8	59.1	54.0
Nitrogen (%)	3.5	6.4	4.78	4.3	2.3	3.3	4.3	2.3	5.7	4.3	4.0	4.5
CO_2 (%) [5]	46.7	35.0	31.2	45.2	38.6	39.3	45.6	38.6	43.7	40.9	36.9	41.5

Notes: (1) CSTR unit is also known as the conventional digester (CD)
(2) TAP Gas Collection Port locations are shown in Fig 1. and Fig. 2.
(3) The last TAP loading and HRT were modified due to time constraints
(4) ? Means questionable TKN data (error indeterminate).
(5) Only Methane and Nitrogen were measured by gas chromatography. CO_2 is assumed to be the difference.
(6) Fail means the CSTR failed to attain and maintain steady state.
(7) * means estimate is based on mass balance calculations
(8) System solids retention time = 2_c = VX /Q_eX_e = ratio of the average mass in the reactors/mass leaving in effluent.

Table V. Comparison of Steady State Mass Balances

System / Volume (liters)	CSTR 30		TAP Stage I 22.6			TAP Stage II 7.4			TAP Total (I+II) 30		
Organic Loading (#/ft^3-day)	0.05	0.125							.05	.125	.187
HRT (days)	15	6	0.53	0.50	0.48	.185	.185	.185	15	6	4
Steady State #	SS1	SS2	SS1	SS2	SS3	SS1	SS2	SS3	SS1	SS2	SS3
COD Balance											
gm Solid COD in	32.56	63.5	879.	710.	1415.	817.	569.	1275	34.1	75.1	97.3
gm Solid COD out	25.19	48.5	834.	614.	1310.	843.	608.	1214	16.3	44.6	34.1
gas COD out	17.2	21.7	6.8	17.0	20.6	15.8	50.1	27.2	22.5	67.1	47.8
COD Close	-9.79	-6.7	38.7	79.2	84.5	-42.	-88.	33.9	-4.7	-36.7	15.4
COD Close (%)	130%	111%	96%	88%	94%	105 %	115 %	97%	87%	149 %	85%

Nitrogen Balance											
gm TKN In	2.08	6.41	40.9	50.2	73.2	38.99	82.8	64.	2.3	3.6	6.97
gm N_2 gas in	0.03	0.08	-	-	-	-	-	-	0.03	0.08	0.11
gm TKN out	2.43	5.6	40.7	86.4	71.7	41.7	45.6	63.8	2.43	4.5	9.0
Nitrogen close	-.315	.91	0.2	-36.2	1.8	-2.7	37.2	0.23	-.15	-.8	-1.9
Nitrogen Close (%)	115%	85%	99%	170%	97%	105 %	55 %	100 %	106 %	120 %	127 %

* all values in gm/day COD or N unless otherwise noted

A good TKN balance was obtained with the nitrogen data collected for TAP stage II. TAP system produced significantly more nitrogen (N_2) gas than the conventional CSTR; production in Stage II was quite a bit higher. Ammonia did not appear in the gas phase because of the recycle from the bottom of Stage II. This was an intentional design change meant to keep ammonia out of the gas stream and produce a clean energy (ammonia free) gas stream for the system (a Department of Energy (DOE) request). The good mass balance results were partially due to nitrogen (N_2) gas liberation. This suggests that the Nitrogen gas detected in Stage I and Stage II off gases was the result of biological denitrification of the system feed. The possibility (and general mechanism) was first introduced in Dr. Schimel's Dissertation in 1980 and this possibility has been suggested in the more recent literature.

Kinetics Comparison

The kinetics shown in Table VI are generated based on the steady state disappearance of solid COD. The CSTR uses a complete mix unit with no recycle model as described steady state Equation #1.

$$Q\,(S_o - S) - ((\hat{m}\,/\,Y)\;S\;X\;V\,/\,K_s + S) = 0 \qquad \text{Eq. \#1}$$

TAP overall kinetics assumes a plug flow with recycle blackbox model as described in steady state Equation #2.

$$(S_i - S)\,/\,q - (1/\,1 + a)\,((\hat{m}\,/\,Y)\;S\;X\,/\,K_s + S) = 0 \quad \text{Eq \#2}$$

where:

Q = the flow rate into the reactor
S_o= influent solid COD concentration
S = concentration of the solid COD in the reactor or effluent
S_i = concentration of solid COD of recycle + influent mixture
Q_r= recycle rate for TAP = 40 liters per day for the project (all TAP steady states)
a = Q_r /Q = the recycle ratio
X = cell concentration in the reactor
V = volume of the reactor

Y = cell yield coefficient (grams or organisms/gram of substrate consumed)
K_s = Monod half saturation constant
$\hat{m}$ = Monod maximum specific growth rate (days^{-1})

The linear techniques for determining the maximum specific growth rate ($\hat{m}$), the half saturation constant (K_s), the cell yield constant (Y) and maintenance coefficient (k_d) are similar to those used by other investigators and need not be elaborated here. Equations 1 and 2 are used to describe the transformation of solid COD to methane COD and derive the kinetic coefficients. The derived kinetic coefficients for both prototypes are compared in Table VI. A graphical summary of the linear approximations is given in the Appendix II.

Kinetics Discussion.

The 20°C operation temperature was used in this testing project because of the need to slow the ***Anaerobic Pump*** to obtain accurate observations. The available literature was searched for mass and kinetic data for sludge mixtures digesting at 20°C. Digestion at this temperature is a rarity[4] since the mesophilic optimum is approximately 35-37°C. This analysis bares this out. The performance and the mass flow data for the CSTR correlates to data detailed in other published 20°C microbial studies[14]. The CSTR actually performed better than expected at steady state #2. The data analysis showed the CSTR kinetic parameters fall within the typical range for this design as reported in the literature[14].

The maximum specific growth rates were estimated from apparent washout rates. The CSTR failed at an HRT of 3 days and started to slow at an HRT of 6 days. Therefore, an estimate for an average maximum is $\hat{m}$ = 1/ 5 days = 0.2 day^{-1}. The estimate for TAP must include the effect of recycle (α), which increases the solids residence time, the cell residence time and cell concentration within the system. TAP started slowing at an HRT of 4 days. Assuming a linear projection to washout (0.9 days), suggests a reasonable overall $\hat{m}$ = 1/0.9 days = 1.1 day^{-1} for TAP. See Table VI for a kinetic comparison.

The derived TAP kinetic constants show the effect of more complete solids hydrolysis (Stage II) and the recycling between the reactors. In previous prototype investigations, it was observed that a improved solids hydrolysis shifts the Monod half saturation and maximum growth coefficients toward values more indicative of lactose or glucose (soluble sugar) uptake. The comparison between TAP Stage I and Stage II Data shows this dramatic shift toward a higher growth rate (2.0 day^{-1} vs. 1 day^{-1}) and lower half saturation coefficient (0.75 gm COD/l vs. 3.75 gm COD/l). The low half saturation values for Stage II indicates that the conversion of volatile acids or sugars is the most likely rate limiting substrate rather than particulate materials.

Table VI. 20°C Kinetic Constants for TAP and CSTR[1]

System /Parameter	Monod Growth $\hat{m}$ (day^{-1})	Monod Death Rate k_d (day^{-1})	Monod Half Velocity Coefficient, K_s (gm solid COD/l)[1]	Y, Yield gm organisms grown[2]/gm of solid COD reduced
CSTR Typical Range	0.1- 0.4	0.01-0.1	1-5	0.1-0.7
CSTR	.20	.04	3.75	0.27
TAP System[3]	1.1	0.023	5.0	1.0
TAP Stage I	1.0	0.023	3.75	1.0
TAP Stage II	2.0	0.04	0.75	1.0

[1] based on solid COD data statistics for all 3 steady states
[2] cell concentrations were not monitored in these tests
[3] Graphical solution by standard linear kinetic derivation given in Appendix II

The kinetics analysis shows TAP Stage II has a remarkable resistance to inhibition[16], even though at the highest loading (HRT = 4 days) the system was slowing. Inhibition resistance is at least partly due to the use of culture/mass recycle. The kinetic evaluation clearly shows that recycling the enriched culture from Stage II to Stage I, helps Stage I to maintain a higher production (growth) rate than occurred in the CSTR. The combination of TAP Stage II solids plasticization (advanced hydrolysis) and the recycling of this culture to Stage I (enhanced growth), produces a Methanogenic culture activity far superior to that in the conventional CSTR digester.

CONCLUSIONS

This testing project has verified TAP prototype equipment, operation, and performance. The computer control system performed well. The transducer lifetime in direct contact with a hostile anaerobic environment was a concern at the outset. The transducers and computer controls did not fail over a year of continuous operation. However, there were problems with irregular sized solids clogging small diameter tubing and pumping small amounts of slurry at slow flow rates. These problems are typical of small scale prototypes being fed real world substrates and should not be a factor in TAP scale-up projects.

The performance data show good statistical consistency and a clear performance difference between the two prototypes. Valid conclusions can be drawn from a direct comparison of the analytical results. The results

- show that this TAP prototype achieved about 2.4 times more volatile solids reduction than the CSTR in the in the same amount of time. The lower than expected volatile solids reduction was due to intermittent feeding that produced high interstitial velocities in the Stage I partial fluidized suspension. This is important because, if the feed solids can be kept in the TAP system, then TAP Stage II will convert the solids at the phenomenal rate of nearly 10 times those typical of conventional

CSTR units. When operating optimally, TAP can convert 3-4 times the amount of the input feed material to methane than a comparable CSTR unit.

• show that TAP transforms organic solid matter about 2 - 4 times faster (overall depending on loading) than a comparable CSTR unit. Kinetic rates achieved by TAP at room temperature are more typical of rates achieved at the high end of the mesophilic range (to 37°C) or thermophilic processes (55°C) exclusive of advanced solids destruction.

• confirm the theoretical predictions put forth by many researchers, including Dr. Boone[15]. Monod theory predicts that the key to increasing the rate of solids conversion to methane would be to increase the extent and rate of solids hydrolysis. TAP is the first process to demonstrate advanced microbial hydrolysis (without heat pretreatment or other chemical methods). TAP is the only process that has accomplished this feat.

• clearly verify and validate Dr. Schimel's earlier findings[5]. His original test data showed that nearly 90% VS reduction and 80% COD reduction is achievable when the process is operating at optimum.

• show the effectiveness of gas plasticization to increase the degree of solids hydrolysis during digestion. This data analysis clearly shows the large rate coefficients increase and the shift in half saturation coefficient which indicates very high rates of solids hydrolysis.

RECOMMENDATIONS

Further development and deployment of this technology is recommended. The testing completed on this project has assisted in identifying areas where additional development might improve TAP performance, reliability and or reduce costs. Areas that require additional effort are

- design and operation of a scaled-up demonstration TAP unit. A TAP half ton TS/day throughput will require an investment of at about $1.2 Million. A larger demonstration plant will require a greater investment. Both public and private funds are being sought for this purpose.
- Find and obtain a commitment from a commercial partner or a group of investors.
- evaluation of other difficult feedstocks to expand the applications for TAP. Reasonably good estimates of TAP performance can be estimated from substrate biodegradability constants (B_o) published in the literature[24]. But for unusual substrates, additional laboratory treatability study will be needed to define their Methane potential.
- evaluate TAP manufacturing costs. In particular, the feasibility of developing a "modular" fixed designs that can be replicated to lower the unit capital cost further.

PUBLIC BENEFITS to CALIFORNIA

3X Greater Methane production + negligible residual means large public and private benefits.

The benefits to California industry, agriculture[10] and wastewater sectors are energy security and relief from environmental concerns and expenses. TAP can be used to (1) derive energy from a wide variety of wet fuel sources (wet biomass) that is normally discarded at an expense, (2) reduce emissions to air and water that are normally remedied at a expense, (3) derive profit from a renewable fuel that is normally discarded at an expense and (4) generate renewable fueled power that normally is generated at the expense and depletion of non-renewable fuels (fossil and nuclear fuel grid power). Because TAP can convert the "non-digestible" fraction of wet organic biomass, this system can be used much like a combustion system to recover energy value. Only in this case, the recovery can be done "underwater". The deployment of TAP would help prevent air pollution (open field combustion of residues or emissions from combustion or pyrolysis systems) and nearly eliminate land disposal of wet residues. The greater process efficiency that produces 3X+ methane can be used to reliably generate electricity onsite in remote areas and provide much needed income in rural areas (farms and food industries). To demonstrate the savings, a comparative analysis of 15 ton/day base case was chosen to show the impact of the three major benefits, energy saving, environmental saving and economic saving.

Energy Savings.

The ***Anaerobic Pump*** Energy savings come in the form of energy production. TAP is net energy producing process with an 11:1 output to input ratio. The detailed calculations leading to the summary values given below are given in Appendix I (page 27).

The *projected* energy production for TAP (GigaJoules/hr) for a 15-ton/day unit was (at the beginning of the project) 11.1 GJ/hr at 35°C (9.25 GJ/hr @ 20°C).

The energy production for TAP (GigaJoules/hr) for a 15-ton/day unit (from this test data) is 9.1 GJ/hr at 20°C

The energy production for the comparable conventional CSTR 15 ton/day unit (GigaJoules/hr) is 2.7 GJ/hr at 20°C.

The assumptions and references used for the derivation of these values are given in the non-proprietary Appendix I (page 27).

Environmental Savings.

Table VII summaries the environmental savings for the ***Anaerobic Pump*** versus a comparable Conventional Complete Mix by Stirring (CSTR). A solid ton processed minus emissions (the amount converted to biogas) is the amount saved from disposal in the environment. Both units would significantly also reduce Green House gas (GHG) emissions. The *projected* wastes, assuming a 15-ton/day TAP operating at 20°C in tons/yr using prior data are:

Table VII. Environmental Savings for a 15 ton/day TAP unit

Process/Category	Projected from prior data (dry tons /year)	Projected from Prototype data (dry tons/year)
The Anaerobic Pump	**3757**	**3170**
Conventional Complete Mix by Stirring (CSTR)	**1367**	**1350**

***solid equivalent is 1 ton dry TS/ ton COD**

TAP Waste 1. Process liquid for effluent polishing by aeration, 1.2 tons COD /year ,
TAP Waste 2. Solid (VS+IS) Residual requiring Disposal, 5104 wet tons/year/15 ton unit*

The *projected* wastes, assuming a 15-ton/day system operating at 20°C other than power generation emissions for TAP in tons/yr/unit using this *project* test data:

TAP Waste 1. Process liquid for effluent polishing by aeration, 1.27 tons COD /year*
TAP Waste 2. Solid (VS+IS) residual requiring disposal, 6572 wet tons/year/15 ton unit*

The wastes other than power generation emissions for the prototype CSTR in tons/yr/unit as described above are shown below. TAP residuals are mineralized and considerably less is produced for disposal.

CSTR Waste 1. Process liquid effluent polishing by aeration, 3.12 tons COD /year
CSTR Waste 2. Solid (VS+IS) residual requiring disposal, 11,117 wet tons/year/15 ton unit*

*The wet ton disposal of stabilized residuals is assumed dried to 40% solids (60% water) for transportation and disposal. Disposal costs of stabilized residual at 40% solid is $30/ton.

Both systems would reduce green house gas emissions. TAP would significantly lower green house gas emissions by 3.3 times over a comparable CSTR unit. The assumptions and calculations used in the deriving these results are given in the Appendix I (page 28).

Economic Savings

The following values summaries the economic savings for the ***Anaerobic Pump*** versus a comparable Conventional Complete Mix by Stirring (CSTR) digester.

The *projected* unit capital cost for TAP 15 ton/day CHP unit at the beginning of the project was **$26/Mw-hr**.

The unit capital cost for TAP 15 ton/day CHP unit based on prototype test data is **$ 28/Mw-hr**. The difference being the less solids capture in the study as noted above.

The unit cost for a comparable 15 ton/day CSTR unit based on prototype data is **$99/Mw-hr**.

The economic saving of deploying TAP rather than CSTR is **$73/Mw-hr**. All assumptions used in the derivation of these stated values are given in the proprietary Appendix I (page 36).

Potential Yearly Savings.

California is a very large biomass state. Appendix I (page 37) presents a biomass inventory for the California Water, Industrial and Agricultural economy sectors. All combined they produce at least 45 million dry tons of methane convertible wet biomass per year. Even though this is a conservative estimate, it represents a significant potential for energy, environmental and economic savings. This estimate does not include biomass generated by California's food processing plants. This market segment spans more than 30 types of California food industries including beverages, chemicals, food, meat, milk, pulp and paper, and pharmaceuticals. This market segment could total more than 8,000 potential TAP customers. It is suspected that much of the food industry waste biomass is currently disposed in public sewer systems and/or regional landfill facilities at an expense. Ignoring the food industry contribution, assuming that all 45 million dry tons produced is recoverable and converted by TAP, the yearly energy benefit to California would be 7.2 Billion therms, saving about $6.5 billion/year (assumed 90 cents/therm) retail natural gas. If all this mass energy is converted to electrical energy at 30% efficiency then a whopping 7226 Mw of new power could be brought on line saving about $4 Billion/year (7.5 cents/kWh) retail grid power. This large potential market, however, must be reduced to account for the economic collection and transport of biomass. A realistic potential yearly saving depends on how much of the biomass can be economically collectable (at the source), transportable and transformed to biogas (methane) by TAP. See the following marketing section for estimates of the minimum California addressable market.

DEVELOPMENT STAGE ASSESSMENT

TAP development has completed technical feasibility and completed most the planning for demonstrating commercial feasibility. TAP has completed PIER Stage 3/gate 3, the research and prototype testing phase, and many of the elements of Stage 4/gate 4. Table VIII summarizes the TAP development status. All TAP critical components have been tested on sub-scale prototypes. After thoroughly examining the extraordinary performance of these test units and the many potential applications (robustness), the attractive economics and environmental advantages, TMC has decided to continue with commercialization[17].

A summary of the TAP development plan[17] is given Appendix I (page 10). The market penetration strategy is to license design engineering firms and OEM equipment manufacturers, utilizing their customer client base for marketing[18]. To help with demonstration scale-up costs, TMC intends to seek PIER follow-on funding to match DOE funding.

Table VIII. TAP Development Assessment Matrix

Stages / Activity	1 Idea Generation	2 Technical & Market Analysis	3 Research	4 Technology Develop-ment	5 Product Develop-ment	6 Demon-stration	7 Market Transfor-mation	8 Commer-cializatio n
Marketing								
Engineering/ Technical								
Legal/ Contractual								
Risk Assess/ Quality Plans								
Strategic								
Production/ Readiness								
Public Benefits/ Cost								

Marketing

The market for TAP is the industrial, agriculture[10,20] and wastewater[19] economy sectors. In California, these sectors combined produce at least 45 million dry tons of wet biomass per year (Appendix I, page 37). The addressable market in California is the current wastewater solids production and the amount produced by large agricultural operations. The minimum capturable market size for California is shown in Table IX. The minimum capturable market is about 15% of the total biomass production and only 9.7% of the total potential production sites available (Appendix I, page 37). If all 6.6 million dry tons of captured biomass is converted to biogas at grid efficiency, then about 600 Megawatts (Mw) of new power could be brought on line.

Table IX. Estimate of Capturable California Market Size [18-23]

Market **Segment**	**Capturable California Market**			
	Dominate Market Type	**# of TAP units[4]**	**Biomass (Thousands of dry Tons/yr)**	**Capturable Market Size ($ Millions)**
TAP WWTP digestion (236 x 0.8 x 0.8 Public Treatment Works)[1]	**Retrofit + a few new**	**156**	**1,088**	**557**

Industrial Waste Treatment Plants (food processing, pulp and paper mills, breweries, slaughter houses etc. = 8199 plant potential	**New and a few Retrofit**	**Unknown[2]**	**Unknown[2]**	**Unknown[2]**
Farm TAP Units For manure and Crop residuals (estimate: ~(56K crop land Farms + 25K Animal Farms) /10.)	**New small systems**	**8,100**	**5,500**	**4,000**
TAP Landfill Mining (wet MSW recovery from 243 x 15% convert = 35 potential)	**New Large systems**	**Unknown[3]**	**Unknown[3]**	**Unknown[3]**
Totals		**8,256+**	**6,588+**	**4,557+**

1. Minimum assumption of only 1 TAP unit per WWTP site.
2. Unable to define from reliable data, privately owned industrial waste treatment systems, but can be assumed to be approximately equivalent to the POTW market size
3. Unable to define the number of landfill mining candidates since RDF preprocessing would be required and landfill gas facilities (well developed in California) would be a competitor.
4. Assumed plant size distribution between 5 tons to 1000 tons /day with the size skewed toward the smaller 8100 agriculture units.

The TAP unit market size (process unit pro forma) is given in Table X. This projection assumes that 41 licensees companies will be able to produce an average of 10 TAP units/year in California over the next 20 years.

Table X. Estimate of TAP California Customer Units [18-23]

Category	**Pro Forma for California Market**				
	Project Completion Year	**5 Years after Completion**	**10 Years after Completion**	**15 Years after Completion**	**20 Years after Completion**

Addressable Market: (A) Current Number of Units in the California Market (no growth)	**8256**	**8256**	**8256**	**8256**	**8256**
Capturable Market: (B) Total Number Installed TAP Units	**0**	**1608**	**3100**	**4810**	**8256**
(C) Market Penetration = B/A x 100%	**0**	**19.5%**	**37.5%**	**58.3%**	**100%**

* Assumes that the 20-year potential market does not grow because of the anticipated difficulties limiting the capturable market, see appendix 1, page 11 calculations and commercialization risk section below.

TAP CHP is commercially viable because it can demonstrate substantial cost and performance advantages over other available technologies. A unit cost comparison for CHP units is shown in Table XI. Thermochemical based systems like Gasification can be competitors, but are limited by biomass moisture content.

Table XI. CHP Unit Capital Cost Comparison

CHP Process (Investigator)	Unit Cost/electrical output
TAP (Schimel)	$26/Mw-hr
TAP (Boone)	$28/Mw-hr
CSTR (Boone)	$99/Mw-hr
BGCC Gasification (EPRI)*	$60/MW-hr

* gasification is shown here only for comparison purposes, since it is more applicable to relatively dry biomass (< 25% moisture)

Engineering/Technical

TAP has numerous cost and performance advantages over conventional anaerobic digestion (AD). All prototype testing has met design specification and performance criteria. Table XII compares the performance objectives and outcomes for this verification prototype project.

Table XII. Project Technical Objectives and Outcomes

Performance Measure	Objective TAP/CSTR Ratio
Performance Objective:	
Peak specific gas production rate	3 to 1
Peak methane production rate	4 to 1
Methane yield per kg volatile solids	2 to 1
Total volatile solids reduction	3 to 1
Total Chemical Oxygen Demand Reduction	4 to 1
Speed: Stage II maximum velocity, $\hat{m}$ (day^{-1})	10/1
Unit Cost Ratio: $/COD reduction @20°C	0.25/1

Performance Outcome:	TAP outperforms CSTR by
Peak specific gas production rate	3.3 to 1
Peak methane production rate	3.9 to 1
Methane yield per kg volatile solids	1.9 to 1
Total volatile solids reduction	2.4 to 1
Total Chemical Oxygen Demand Reduction	3.4 to 1
Speed: Stage II maximum velocity, $\hat{m}$ (day^{-1})	10/1
Unit Cost Ratio: $/ COD reduction @20°C	0.29/1

Legal / Contractual

The original 1983 TAP patents (Appendix 1, page 2-3) covered the structure and fabrication specifics (ie. how to build TAP). In 1987, a patent (Appendix 1 page 4) covering the application of pressure cycling TAP Stage II was issued (ie. how to achieve advanced solids destruction). A new TAP patent (Appendix 1, page 5-6)) has been filed with the USPTO covering Biomass to Energy (BTE), structure and operation. This patent explains the method of gas plasticization, pressure program and pressure swing sequence, and process operation via computer control and some new apparatus modification to enable remote energy production systems. There are no outstanding or unresolved IP issues. In view of the large amount and diversity of biomass available in California and the early stage of the TAP patent cycle, the royalty potential for the PIER program could be significant.

Environmental Safety & Risk Assessment / Quality Plans

Generally, efficient energy producing processes are used forever (timeless). TAP technology has no apparent life cycle limit. The environmental risks are minor as discussed in Appendix I (page 18). However, TAP will have to overcome regulatory approval hurdle. Formal EPA regulatory approval is being pursued while non-regulated industrial and agricultural applications is being commercialized. The Department of Energy (DOE) will support TAP development through scale-up. The DOE, Office of Industrial Technology has issued a FACT sheet for the ***Anaerobic Pump*** which explains the potential for agricultural applications (Appendix I, page7). This opportunity is only awaiting matching funds.

Production Readiness & Commercialization

Many individuals have contributed to the TAP development, formulating plans and seeking financing. More than 30 presentations have been given to date and all were well received. Despite the effort and expense, a committed partner or consortium of partners to help complete commercialization is still needed. Unfortunately, large U.S. chemical and environmental companies have decided that TAP is an invasionary technology. This conclusion runs counter to the "the need for exclusivity" to boost corporate competitive advantage and profits needed to compete in the international marketplace. To circumvent this barrier, international companies and smaller domestic engineering firms and equipment manufacturers (second tier) have been notified of the licensing opportunity. These licensing prospects are those companies that are emerging and seeking new processes like TAP that will dominate the combined disposal and Biomass to Energy (BTE) markets in the future. TAP is unique in that its end-of-the-pipe application has significant economic and environmental strengths that appeal to industry. This is the route chosen to overcome regulatory (EPA) bias. See Appendix I (page 22) for a more detailed explanation of the critical commercialization risks and planned remedies.

Public Benefits / Costs

For all stakeholders, especially the public, the benefits far outweigh the costs. Table XIII shows the tangible public benefits of deploying TAP. Intangible, aesthetic and other benefits from TAP deployment have been ignored in this analysis, but are listed in Appendix I (page 24).

Table XIII. Value of Annual Public Benefit

Public Benefit Category	Yearly Total	% of Total
	(Million $)	Public Benefit
Employment	139	7.6
Environmental:		
Energy Saving	360	19.8
Fossil Fuel CO_2 avoided	0.017	0.009
Cost of Landfill Space Avoided	1317	72.5
Stream and Groundwater Cleanup Avoided	1	0.05
Employment & Environmental subtotal	1817	100.
Intangible, Aesthetic and Other Benefits	?	0 (see Appendix I, p. 24)
Total Benefits	1817	100.

Table XIV shows the results of the Benefit/Cost analysis for all stakeholders. For every private dollar invested in TAP R&D, $11.2 is profited. For every public dollar invested in TAP R&D, $8070.00 is returned. See Appendix I (page 40) for specific data and calculations.

Table XIV. Comparison of Benefit/Cost Ratios for all Stakeholders*

California Public	Industrial Customer	Licensee	Licensor (TMC)
8070/1	4.5/1	3.7/1	3/1

*see Appendix I, page 40 for calculations

GLOSSARY

1. TAP is the Anaerobic Pump
2. TAP System means both reactors, Stage I + stage II.
3. WAS means Waste Activated Sludge biomass substrate composed mainly of bacterial cells
4. PS means Primary Sludge composed mainly of sanitary solids and cellulosic materials
5. BTE means Biomass to Energy conversion
6. DOE means the U.S. Department of Energy
7. NIST means the National Institute of Standards and Technology
8. CEC means the California Energy Commission
9. PIER means the Public Interest Energy Research (CEC program)
10. SERBEP means the Southeastern Regional Biomass Energy Program
11. NEMWI means Northeast Midwest Institute
12. EPA means the Environmental Protection Agency (Federal)

13. GWP means Global Warming Potential (21 for Methane)
14. NIH means not invented here syndrome
15. FOO means Fear of Obsolescence syndrome
16. Q means the pumping volumetric Flow Rate (liters/day)
17. CHP means systems that utilize the heat produced by the Power production module.
18. POTW means Public Owned Treatment Works
19. COD means the Chemical Oxygen Demand which is measure of the organic content a mixture.
20. VS means Volatile Solids which is a gravimetric measurement of the organic content of a mixture.
21. TVS means total volatile solids, which is a gravimetric measurement of the combined soluble and solid organic content of a mixture.
22. TKN means Total Kjeldahl Nitrogen which is a measure of the total nitrogen content in a mixture.
23. CSTR means Complete mix by stirring which is a conventional type of fermentation reactor where the reactor contents are completely mixed.
24. PF means Plug flow which is a type of conventional type of fermentation reactor where very little mixing takes place.
25. TS means total solids, the total of organic and inorganic solid matter, soluble and insoluble.
26. BTM means biomass to methane conversion system
27. BGCC means Biomass Gasification Combined Cycle
28. Q is the flow rate into the reactor
29. $S_{o\ is}$ influent solid COD concentration
30. S = concentration of the solid COD in the reactor or effluent
31. S_i = concentration of solid COD of recycle + influent mixture
32. Q_r= recycle rate for TAP = 40 liters per day for the project (all TAP steady states)
33. $\alpha = Q_r/Q$ is the recycle ratio
34. X = cell concentration in the reactor
35. V = volume of the reactor
36. Y = cell yield coefficient (grams or organisms/gram of substrate consumed)
37. K_s = Monod half saturation constant
38. $\hat{m}$ = Monod maximum specific growth rate ($days^{-1}$)
39. k_d = Monod Death Rate Coefficient (day^{-1})
40. B_o = Biodegradability constant (gram COD destroyed/ gram COD added over infinite time)
41. B = Methane yield (liters methane at STP/gram COD added)
42. STP means Standard Temperature and Pressure
43. USPTO means the United States Patent and Trademarks Office

REFERENCES

1. Schimel, K.A., “Anaerobic Pump Technical Disclosure NIST #707, Invention and Innovation Program”, Oct. 1997.
2. Schimel, K.A., “The Anaerobic Pump”, U.S. DOE Invention and Innovation Grant #GO10300, Oct. 1997.
3. The CRC Biotechnology Handbook, “Fermentation Reactions of Anaerobic Digestion,” David R. Boone, 1976.
4. “Systems and Markets Overview of Anaerobic Digestion”, IEA, 1997.

5. Schimel, Keith A., “Anaerobic Vacuum Digestion of Raw Waste Activated Sludge,” Ph.D. Dissertation, Syracuse University, Syracuse NY, 1980.
6. Schimel, K. A., “Method for the Treatment of Organic material and Particularly Sewage Sludge”, U.S. Patent # 4,375,412 (March 1983).
7. Schimel, K. A., “Method for the Treatment of Organic material and Particularly Sewage Sludge”, U.S. Patent # 4,401,565 (August 1983).
8. Schimel, K. A., “Method for the Treatment of Organic material and Particularly Sewage Sludge”, U.S. Patent # 4,642,187 (Feb. 1987).
9. Schimel, U.S. “Anaerobic Biomass Slurry to Energy Systems”, U.S. Patent Pending, November 2001.
10. “Methane Recovery from Animal Manures: The current Opportunities Casebook.”, P. Lusk, Resource Development Associates, Washington D.C., NREL/SR-580-25145, Sept. 1998.
11. Schimel, K. A., Anaerobic Suspension Theory Contribution Report #TMC-Q1152, Technology Matrix Corp., June 1986.
12. Pauss et al., “Liquid-To-Gas Mass Transfer in Anaerobic Process: Inevitable Transfer Limitations of Methane and Hydrogen in the Biomethanation Process”, Appl. Env. Microbiol., 56:1636-1644 (1990).
13. “Standard Methods for the Examination of Water and Wastewater@, 18th Edition, APHA-AWWA-WPCF, Wash D.C.
14. O’Rourke, J. T., “Kinetics of Anaerobic Waste Treatment at Reduced Temperatures,” Ph.D. Dissertation, Stanford University, 1968.
15. Boone et. al., “Diffusion of the Interspecies Electron Carriers H_2 and Formate in Methanogenic Ecosystems and It=s Implications in the Measurement of K_m for H_2 or Formate Uptake”, Applied and Environmental Microbiology, July 1989, pp 1735-1741.
16. Dolfing, J., “The Energetic Consequences of Hydrogen gradients in Methanogenic Ecosystems”, FEMS Microbiology Ecology 101, 1992, pp. 183-187.
17. Schimel, K.A., “The Anaerobic Pump Development Plan,” TMC, Rev.1986 - 1999.
18. “Market Penetration of New Energy Technologies@, NREL-TP-462-4860, 1999.
19. “Anaerobic Pump Commercial Market Assessment@, New Horizon Technologies (Center for Innovation, UND), prepared for the U.S. Department of Energy, June 1997.
20. Chynoweth, D., Owens, J, Legrand, R. (1997), “Renewable Methane from the Anaerobic Digestion of Biomass”, ASAE Publication 976077. Presented at the 1997 ASAE Annual International Meeting, Minneapolis, MN, 10-14 August 1997.

Appendix I References

21. National Agricultural Statistics Service (1993). 1992 Census of Agriculture: Highlights of California Agriculture. Washington DC: US Department of Agriculture, Bureau of the Census.
22. “1999 Update: Biosolids Management Practices Survey in the State of California”, California Association of Sanitation Agencies (CASA) and the Tri-Technical Advisory Committee, Dec. 20, 1999.
23. “Meeting the Challenge: U.S. Industry Faces the 21st Century, The U.S. Environmental Industry”, Office of Technology Policy, U.S. Department of Commerce, September 1998.
24. Hill, D. T. 1982. “A Comprehensive Dynamic Model for Animal Waste Methanogenesis”, ASAE, Vol. 25, No. 5, pp. 1374-1380.

APPENDIX I (Non-Proprietary)

THE ANAEROBIC PUMP PROTOTYPE TESTING

Sections:

- **Front Page of Issued Patents and Patent Pending**
- **DOE Agriculture FACT sheet for TAP**
- **TAP Development Summary**
- **TAP vs. CSTR Energy Environmental, and Economic Comparison**
- **Estimate of California Biomass Inventory**
- **Estimate of Capturable California Biomass Market**

No. 4375412

THE UNITED STATES OF AMERICA

TO ALL TO WHOM THESE PRESENTS SHALL COME:

Whereas, THERE HAS BEEN PRESENTED TO THE

Commissioner of Patents and Trademarks

A PETITION PRAYING FOR THE GRANT OF LETTERS PATENT FOR AN ALLEGED NEW AND USEFUL INVENTION THE TITLE AND DESCRIPTION OF WHICH ARE CONTAINED IN THE SPECIFICATION OF WHICH A COPY IS HEREUNTO ANNEXED AND MADE A PART HEREOF, AND THE VARIOUS REQUIREMENTS OF LAW IN SUCH CASES MADE AND PROVIDED HAVE BEEN COMPLIED WITH, AND THE TITLE THERETO IS, FROM THE RECORDS OF THE PATENT AND TRADEMARK OFFICE IN THE CLAIMANT(S) INDICATED IN THE SAID COPY, AND WHEREAS, UPON DUE EXAMINATION MADE, THE SAID CLAIMANT(S) IS (ARE) ADJUDGED TO BE ENTITLED TO A PATENT UNDER THE LAW.

NOW, THEREFORE, THESE **Letters Patent** ARE TO GRANT UNTO THE SAID CLAIMANT(S) AND THE SUCCESSORS, HEIRS OR ASSIGNS OF THE SAID CLAIMANT(S) FOR THE TERM OF SEVENTEEN YEARS FROM THE DATE OF THIS GRANT, SUBJECT TO THE PAYMENT OF ISSUE FEES AS PROVIDED BY LAW, THE RIGHT TO EXCLUDE OTHERS FROM MAKING, USING OR SELLING THE SAID INVENTION THROUGHOUT THE UNITED STATES.

In testimony whereof *I have hereunto set my hand and caused the seal of the* **Patent and Trademark Office** *to be affixed at the City of Washington this first day of March in the year of our Lord one thousand nine hundred and eighty-three, and of the Independence of the United States of America the two hundred and seventh.*

Attest: Priscilla A. Keller
Attesting Officer.

Commissioner of Patents and Trademarks.

No. 4401565

THE UNITED STATES OF AMERICA

TO ALL TO WHOM THESE PRESENTS SHALL COME:

Whereas, THERE HAS BEEN PRESENTED TO THE

Commissioner of Patents and Trademarks

A PETITION PRAYING FOR THE GRANT OF LETTERS PATENT FOR AN ALLEGED NEW AND USEFUL INVENTION THE TITLE AND DESCRIPTION OF WHICH ARE CONTAINED IN THE SPECIFICATION OF WHICH A COPY IS HEREUNTO ANNEXED AND MADE A PART HEREOF, AND THE VARIOUS REQUIREMENTS OF LAW IN SUCH CASES MADE AND PROVIDED HAVE BEEN COMPLIED WITH, AND THE TITLE THERETO IS, FROM THE RECORDS OF THE PATENT AND TRADEMARK OFFICE IN THE CLAIMANT(S) INDICATED IN THE SAID COPY, AND WHEREAS, UPON DUE EXAMINATION MADE, THE SAID CLAIMANT(S) IS (ARE) ADJUDGED TO BE ENTITLED TO A PATENT UNDER THE LAW.

NOW, THEREFORE, THESE **Letters Patent** ARE TO GRANT UNTO THE SAID CLAIMANT(S) AND THE SUCCESSORS, HEIRS OR ASSIGNS OF THE SAID CLAIMANT(S) FOR THE TERM OF SEVENTEEN YEARS FROM THE DATE OF THIS GRANT, SUBJECT TO THE PAYMENT OF ISSUE FEES AS PROVIDED BY LAW, THE RIGHT TO EXCLUDE OTHERS FROM MAKING, USING OR SELLING THE SAID INVENTION THROUGHOUT THE UNITED STATES.

In testimony whereof *I have hereunto set my hand and caused the seal of the* **Patent and Trademark Office** *to be affixed at the City of Washington this thirtieth day of August in the year of our Lord one thousand nine hundred and eighty-three, and of the Independence of the United States of America the two hundred and eighth.*

Attesting Officer.

Commissioner of Patents and Trademarks.

United States Patent [19]

Schimel

[11] **Patent Number: 4,642,187**

[45] **Date of Patent: Feb. 10, 1987**

[54] **SYSTEMS FOR THE TREATMENT OF ORGANIC MATERIAL AND PARTICULARLY SEWAGE SLUDGE**

[76] Inventor: **Keith A. Schimel,** 220 Glen Echo Dr., Norfolk, Va. 23805

[21] Appl. No.: **337,545**

[22] Filed: **Jan. 6, 1982**

Related U.S. Application Data

[60] Division of Ser. No. 199,896, Oct. 23, 1980, Pat. No. 4,375,412, which is a continuation-in-part of Ser. No. 3,167, Jan. 15, 1979, abandoned.

[51] **Int. Cl.**[4] **C02F 11/04**

[52] **U.S. Cl.** **210/258**

[58] **Field of Search** 210/603, 609, 613, 903, 210/180, 188, 258

[56] **References Cited**

U.S. PATENT DOCUMENTS

1,757,263	5/1930	Sims	210/188 X
2,029,702	2/1936	Buswell et al.	210/603
2,786,025	3/1957	Lamb et al.	210/609 X
4,173,531	11/1979	Matsch et al.	210/903 X
4,198,292	4/1980	Snider et al.	210/603
4,279,753	7/1981	Nielson et al.	210/903 X

Primary Examiner—Tom Wyse

Attorney, Agent, or Firm—Martin Lukacher

[57] **ABSTRACT**

Anaerobic digestion of organic material, particularly biological sludge, such as sewage sludge, is carried out in a closed system having a first digestion tank and a second concentration and partial digestion tank. The concentrated and partially digested sludge is fed to the first tank where it is maintained under vacuum such that an active zone of organic material undergoing digestion is detained therein for a long period of time. The digested sludge is withdrawn against the vacuum and has approximately 80 to 90% of the organic solids therein mineralized; thus simplifying dewatering and ultimate disposal of the sludge. Pathogens including viruses are also removed from the digested sludge. Denitrification takes place in the vacuum digester tank and gas consisting essentially of nitrogen is removed. Return sludge from the vacuum digester and influent sludge is fed into the second or concentrator tank to facilitate reseeding with anaerobic organisms. Both tanks are provided with passageways which are coterminous near the upper ends of the tanks and provided with baffles which direct the flow to be in opposite directions in the passageways, thus providing for stripping of the gas and solid-liquid separation. Gas consisting essentially of methane and carbon dioxide is produced from the second tank. Supernatant from the second tank may be recirculated to the source of the sludge to facilitate degradation of remaining organic contaminants. For the production of ammonia gas, the pressure in the first tank is cycled repeatedly between vacuum and atmospheric or just above atmospheric pressure; the ammonia gas being withdrawn with the digested sludge.

3 Claims, 6 Drawing Figures

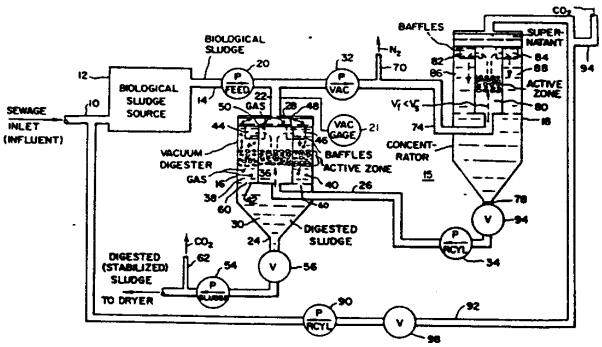

United States Patent Pending

Schimel

ANAEROBIC BIOMASS SLURRY TO ENERGY SYSTEMS

[76] Inventor: Keith A. Schimel,
330 Apple St.
Syracuse, NY 13204

[21] Appl. No.: -

[22] Filed: Nov. 21, 2001

Related US. Application Data

[60] Division of 5cr. No. 199,896, Feb. 10, 1987, Pat. No. 4,642,187

[51] **Int. Cl.**[4]..... **CO2F 11/04**
[52] **u.S. Cl.** ..... **210/258** [58] **Field of Search** 210/603, 609, 613, 903, 210/180, 188, 258

[56] **References Cited**

U.S. PATENT DOCUMENTS

2777815	Jan., 1957	Forrest.		
2786025	Mar., 1957	Lamb et al..		
3847803	Nov., 1974	Fisk.		
4040953	Aug., 1977	Ort		210/603.
4053394	Oct., 1977	Fisk.		
4298621	Nov., 1981	Samis et al.	210/603.	
4318993	Mar., 1982	Ghosh et al..		
4375412	Mar., 1983	Schimel.		
4401565	Mar., 1983	Schimel.		
4642187	Feb. 1987	Schimel.		
4491522	Jan., 1985	Ishida et al.	210/603.	
4551250	Nov., 1985	Morper et al..		
4559142	Dec., 1985	Morper.		
4597872	Jul., 1986	Andersson et al..		
4652374	Mar., 1987	Cohen		210/613.
4659471	Apr., 1987	Molin et al..		
4722741	Feb., 1988	Hayes et al.	210/603.	
4846975	Jul., 1989	Kelpman	210/609.	
5015384	May., 1991	Burke.		
5185079	Feb., 1993	Dague		210/603.
5431819	Jul., 1995	Hack et al..		
5500123	Mar., 1996	Srivastavn	210/613.	
5525228	Jun., 1996	Dague et al..		
5529692	Jun., 1996	Kubler.		
5599450	Feb., 1997	Li et al.	210/603.	
5670047	Sep., 1997	Burke.		
5785852	Jul. 1998	Rivard et al..		
6113786	Sep., 2000	Burke		

Primary Examiner—Tom Wyse
Attorney, Agent, or Firm—Jaeckle Fleischmann & Mugel, LLP

[57] **ABSTRACT**

This invention extends the capability of anaerobic digestion to fully complete the transformation of wet biomass to methane gas and chemical products. This invention can be used to extract the maximum amount of energy from biomass immersed in water. Fully recovering the mass energy content requires completing mass hydrolysis. Cyclic pressure digestion greatly improves the performance

Appendix 1

of advanced solids hydrolysis and it's efficiency is further improved as a combined cycle heat and power process. This rapid process can be optimized and computer controlled to improve efficiency and reliability. The greater quantity of biogas produced can be converted to a greater quantity of useful energy and/or chemical products without the creation of undesirable waste byproducts for disposal.

40 Claims, 6 Drawing Figures

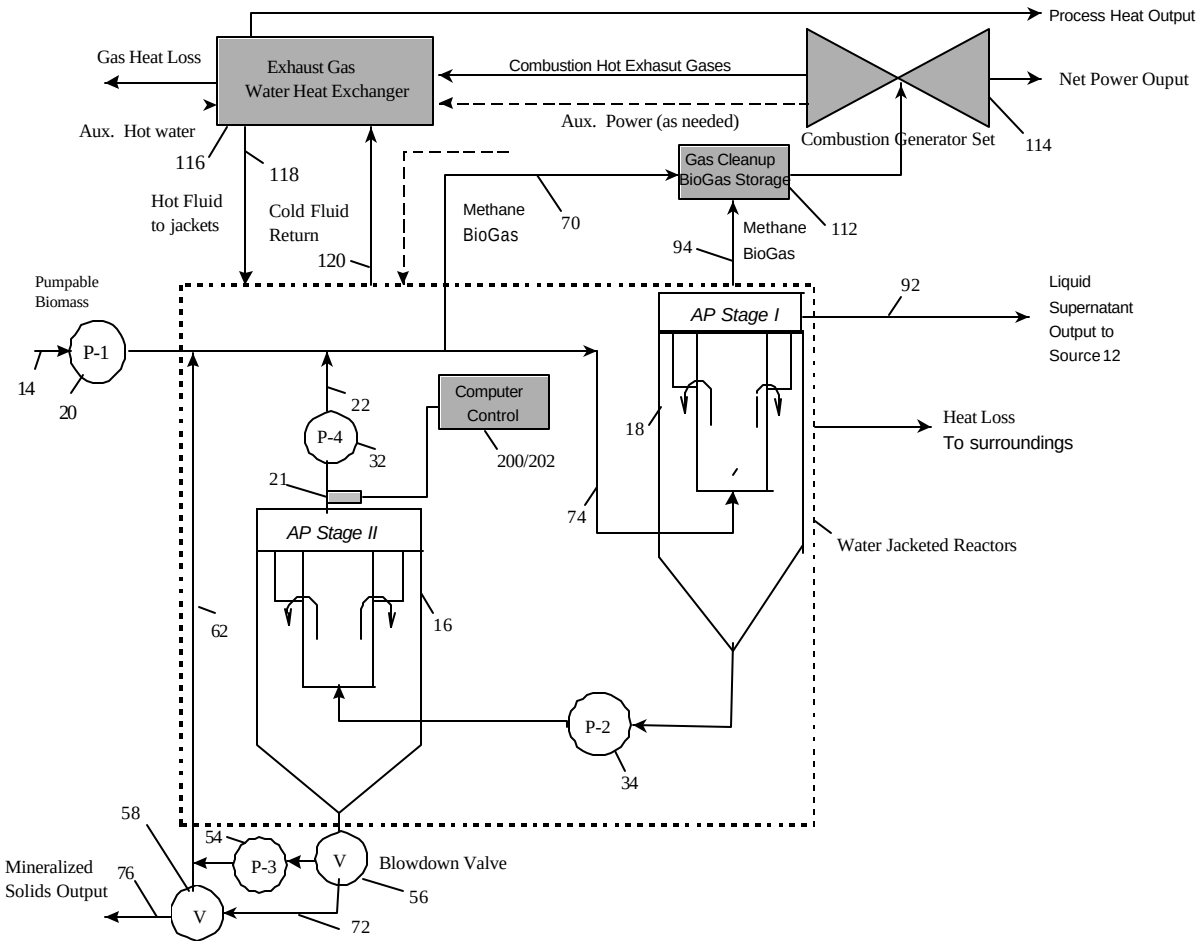

Fig. 1

Appendix 1

OIT's Agriculture Partnership Portfolio
Plant Science & Production
Pine Gene Discovery Project
Molecular Physiology of Nitrogen Allocation in Poplar Trees
Energy Efficient Irrigation
Precision Farming For Agriculture
Diagnosis of Soil Limitations to Productivity
Nutrient Limitations in Southern Pine
Growth Traits in Pinus Taeda L
Genes to Accelerate Pine Development
Negative Mutations of Floral Genes
Genetic Variation of Fiber Components
Regulation of Crown Architecture
Processing
Catalytic Upgrading of Glucose
Products from Wheat-milling Byproducts
Chemicals from Lignocellulose
Industrial Chemicals from Levulinic Acid
Separator for Ethanol From Cellulosics
Novel Membrane Process for Lactate Esters
Production of Succinic Acid from Biomass
Lactic Acid From Renewable Resources
Corn Fiber to Polyols
Clean Fractionation for Cellulose Plastics
Hydrolysis of Lignocellulose
Industrial Membrane Filtration
Yeast for Fermentation of Biomass to Chemicals
Propanediol From Fermentation-Derived Malonic Acid
Isosorbide Production Using Solid Acid Catalysts
Separation Process for Bio-Based Succinic Acid
Butyric Acid and Butanol From Biomass
Reversible Chemical Association Separation
Continuous Saccharification of Ligno-Cellulose
Membrane Reactor for Fischer Tropsch Synthesis
Novel Catalyst for CH_4 to CO Conversion
Utilization
Improved Catalytic Enzymes
Utilization of Corn-based Polymers
Soy-based 2-Cycle Engine Oils
Plastics and Fibers from Biobased Succinic Acid
Vegetable Oils as Polymer Building Blocks
Renewable Fine Chemicals
High Value Products From Wheat
Energy
Efficient Steam Systems
Advanced, Efficient Motor Systems
Efficient Compressed Air Systems
Black Liquor Gasification
Energy and Waste Audits
Anaerobic Pump
Irrigation Valve Energy Saver
DSP Power Electronics Systems for Renewable Energy Systems
Environment
Paper Mill Sludge and Agriculture Waste Utilization
Low Temperature Catalytic Gasification of Aqueous Streams
Recycling
Electrodeionization for Recovery and Recycling of Waste and Water
Use of Residual Solids for Concrete
Ceramic Membranes with CO_2 Transport Channel
OIT Cost: $32 million
Cost Share: $26 million
Total Cost: $58 million
Revised 1/9/01

Appendix 1

AGRICULTURE

Project Fact Sheet

ANAEROBIC PUMP

A New Biomass Energy Conversion Technology Yields Methane for Power Generation

Benefits

- Applies to a wide range of wet biomass wastes
- Requires no drying and prethickening facilities
- Has an 11:1 energy output-to-input ratio
- Increases the conversion of wet biomass wastes from the typical 20% to 40% to about 90%
- Significantly reduces disposal costs
- Increases the rate of conversion by two to three times depending on the feed material
- Mitigates groundwater contamination associated with land disposal of wet biomass wastes

Applications

Provides a simple, efficient method of producing methane from water treatment, industrial, and agricultural waste streams.

"The Anaerobic Pump could easily save the nation a few million to several tens of million barrels of crude oil per year."

– Howard E. Robb
National Institute of
Standards and Technology

Biomass wastes are a potential energy resource; however, most biomass wastes are too wet to burn. Anaerobic bacteria can break down or digest wet biomass wastes and convert them to methane and CO_2. In the conventional anaerobic digestion process, wet biomass and anaerobic bacteria are mixed in a stirred tank with considerable headspace to collect the gases. When gas production drops, the supernatant is decanted, and the undigested solids are pulled off the bottom of the tank and sent to land disposal. This crude process digests 20% to 40% of the solid feed.

The Anaerobic Pump provides efficient two-stage digestion of wet biomass. The process converts about 90% of the solid feed to methane and CO_2. In the first stage the biomass is rapidly seeded with anaerobe populations and becomes buoyant from rapid gas production as easily degradable polymers are digested. The gases produced are continuously removed. The undigested solids overflow the inner reactor, separate from the liquid in outer chambers, and pass to the second stage. The pressure in the second stage is continuously cycled between low and high pressure. The pressure swing enables the simultaneous plasticization and thickening of the digesting mass, which improves the process economics dramatically.

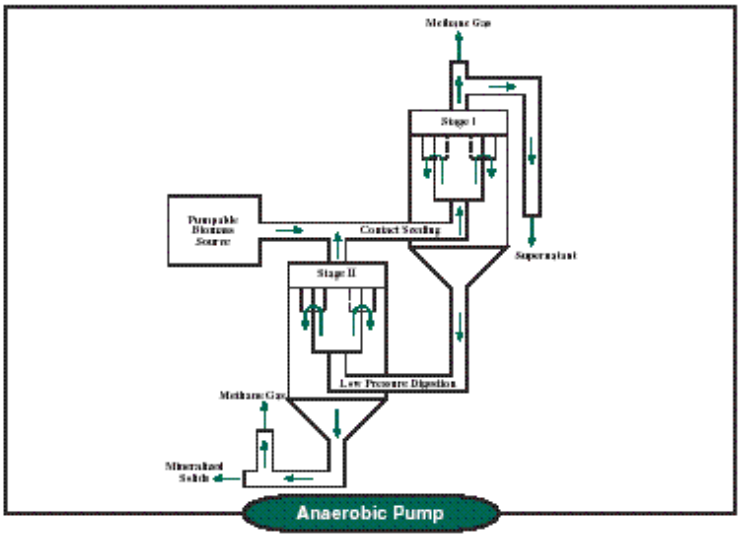

Anaerobic Pump

OFFICE OF INDUSTRIAL TECHNOLOGIES
ENERGY EFFICIENCY AND RENEWABLE ENERGY • U.S. DEPARTMENT OF ENERGY

Appendix 1

Project Description

Goal: The goal of the grant from the U.S. Department of Energy's Inventions and Innovation Program was to determine that the Anaerobic Pump is capable of the following: 1) high digestion rate per unit volume of reactor space, 2) true continuous flow with in-reactor solids thickening, 3) exceptional resistance to hydrolysis inhibition, 4) continuous and rapid in-reactor solid/liquid/gas separation, and 5) digestion of 90% of the solids.

Progress and Milestones

A prototype of the Anaerobic Pump was developed under the Inventions and Innovation Program for converting treatment plant sludge to methane gas. Prototypes of the Anaerobic Pump and a single-stage stirred reactor (30 liters) were operated side by side. Both systems were held at 21°C and fed the same substrate at the same loading rates. Using funding from the California Energy Commission, three steady-state experiments were conducted at 20°C with the same two prototypes. Analytical data from both systems were compared and clearly show a far superior performance for the Anaerobic Pump. The Anaerobic Pump nearly tripled the methane gas production per unit of mass fed to the process. Further pilot-scale testing is needed.

Economics and Commercial Potential

The Anaerobic Pump has an 11:1 output-to-input energy ratio. At room temperature, input energy is 900 Btu per lb of biomass input. A biomass-input unit operating at 15 tons per day would produce 69.2 million standard cubic feet per year of methane. The process requires two tanks and three pumps. All process equipment and parts can be constructed from off-the-shelf technologies. The basic unit capital investment is about $3.00/gallon to about $6.00/gallon of system reactor volume.

The United States produces 1 billion tons of methane-convertible wet biomass each year. Using the Anaerobic Pump, this biomass could yield about 8 trillion cubic feet of methane, which is worth about $20 billion on today's market. Assuming all this methane is converted to electricity, about 30 GW of new capacity could be brought on-line. Nationally, the 2 million farmers who produce animal and crop residuals represent about 48% of nonforestry biomass waste. The unit capital cost of the Anaerobic Pump built for power production is about $26/MWh or less than 50% of the cost of a comparable gasification unit ($60/MWh).

Industry of the Future — Agriculture

Agriculture, a target industry for the Industry of the Future initiative, emphasizes partnerships to develop technologies for using plants, crops, and their wastes as starting materials for industrial products. An agriculture industry team has been formed within the Office of Industrial Technologies (OIT) to facilitate agriculture industry/federal government partnerships. This team will leverage resources available to established OIT teams, such as the chemicals and forest products teams, to strengthen the contributions of the agriculture team and to bring new ideas to the service of the agriculture industry.

OIT Agriculture Industry Team Leader: Mark Paster (202) 586-2821.

The Inventions and Innovation Program works with inventors of energy-related technologies to establish technical performance and to conduct early development. Ideas that have significant energy-savings impact and market potential are chosen for financial assistance through a competitive solicitation process. Technical guidance and commercialization support are also extended to successful applicants.

For project information, contact:

Keith A. Schimel
Technology Matrix Corporation
P.O. Box 11236
330 Apple Street
Syracuse, NY 13204
Phone: (315) 425-7741
Cengr@baldcom.net

For more information about the Inventions and Innovation Program, contact:

Lisa Barnett
Program Manager
Inventions and Innovation Program
U.S. Department of Energy
1000 Independence Avenue SW
Washington, D.C. 20585-0121
Phone: (202) 586-2212
Fax: (202) 586-7114
lisa.barnett@ee.doe.gov

Visit our home page at
www.oit.doe.gov

Order # I-AG-707
October 2001

Appendix 1

TAP DEVELOPMENT PLAN SUMMARY

TAP development has completed technical feasibility and is planning for demonstrating commercial feasibility. All TAP critical components have been tested on sub-scale prototypes. After thoroughly examining the extraordinary performance of these units, the many potential applications (robustness), and the attractive economics and environmental advantages, TMC has decided to continue commercialization despite the absence of a particular partnering arrangement. It can only be concluded that the installation TAP is an extremely attractive alternative when considering critical energy shortages, substantially higher energy prices, and a higher consumer demand for energy in California. A complete TAP development plan is available from TMC on request. TMC intends to seek PIER follow-on funding to match DOE funding for demonstration scale-up of this technology. The following activity narrative summarizes the development plan that corresponds with pertinent data and calculations.

Marketing:
TAP is commercially viable because its performance characteristics greatly improve the market advantages over conventional technologies.

Market Niche
The market niche for TAP is industrial and farm applications that require disposal of wet biomass and need process energy (methane). The combination of regulatory cost avoidance and efficient conversion to saleable energy is decisive. TAP CHP systems could be deployed at the end of grid distribution systems to bolster low voltage common in rural areas. This would have distinct economic and environmental advantages. The competition, mass burning and gasification technologies are inappropriate for these wet fuels. Conventional digestion is simply to slow and does not convert enough of the mass to energy to be competitive (marginal economics).

California Market Size
The California industrial market is a combination of disposal (mature) and BioEnergy (emerging) markets. This market combination produces at least 45 million dry tons of wet biomass per year. See the following section, TAP Market Estimations, for the California wet biomass inventory. From this total, it is difficult to estimate the amount of biomass that is recoverable or the amount currently captured in privately owned treatment systems as compared to the amount currently disposed to public sewer systems. Hence, a minimum addressable market estimate is given here. The minimum addressable market is the sum of the "currently collected" sludge at waste treatment plants and large farm manure production facilities in California. Based on this rationale, the minimum capturable market size for California is shown in Table XI. The minimum capturable market is about 15% of the total biomass production and only 9.7% of the total potential production sites available (See TAP Market Estimation section below for calculations). If all 6.6 million dry tons of currently captured biomass is converted to biogas at grid efficiency, then about 600 Megawatts (Mw) of new power could be brought on line.

California Market Penetration
TAP matches industrial and large farm energy and environmental requirements. In general, these customers need a quickly deployable simple system, a low cost reliable power production

process, income revenue from onsite power offset and excess power sales, negligible disposal and handling costs and a means of reducing regulatory pressure to solve immediate environmental problems (odors, runoff

Table XI. Estimate of Capturable California Market Size [18-23]

Market Segment	20 year Capturable California Market			
	Dominate Market Type	**# of TAP units[3]**	**Biomass (Thousands of dry Tons/yr)**	**Capturable Market Size ($ Millions)**
TAP WWTP digestion (236 x 0.8 x 0.8 Public Treatment Works)	**Retrofit + a few new**	**156**	**1,088**	**557**
Industrial Waste Treatment Plants (food processing, pulp and paper mills, breweries, slaughter houses etc. = 8199 plant potential	**New and a few Retrofit**	**Unknown[1]**	**Unknown[1]**	**Unknown[1]**
Farm TAP Units For manure and Crop residuals (estimate: ~(56K crop land Farms + 25K Animal Farms) /10.)	**New small systems**	**8,100**	**5,500**	**4,000**
TAP Landfill Mining (wet MSW recovery from 243 x 15% convert = 35 potential)	**New Large systems**	**Unknown[2]**	**Unknown[2]**	**Unknown[2]**
Totals		**8,256+**	**6,588+**	**4,557+**

1. Unable to define from reliable data, privately owned industrial waste treatment systems, but can be assumed to be approximately equivalent to the POTW market size
2. Unable to define the number of landfill mining candidates since RDF preprocessing would be required and landfill gas facilities (well developed in California) would be a competitor.
3. Assumed plant size distribution between 5 tons to 1000 tons /day with the size skewed toward the smaller 8100 farm units.

etc,). Potential industrial customers responding to TAP financials have been very positive. See Appendix 1

the following appendix section for the 15-ton/year financials.
Eighty percent (80%) of California's WWTPs currently use conventional Anaerobic Digestion (AD) as the stabilization method of choice. Existing Wastewater plant AD units could be quickly retrofitted with TAP technology to nearly triple their current methane output capacity. On the other hand, potential private industry customers are generally healthy and only concerned by tightening government disposal regulations or rising sewer discharge fees. Unfortunately, exclusive of the Pulp and Paper mills, the industrial biomass production from California industry is difficult to define.

Converting farm crop residuals and animal manures to energy can be profitable alternatives for farmers and will complement crop production income. About 20% of California farms produce enough biomass (individual farm basis) and are experiencing a serious residual disposal problem (field burning or manure runoff). Smaller farms would need to band together in regional cooperatives to achieve economy of scale.

Defining a capturable market size from reliable data gives a very conservative TAP pro forma for the California biomass market as shown in Table XII. This projection assumes that 41 licensees companies will be able to produce an average of 10 TAP units/year in California per year over the next 20 years.

Table XII. Estimate of TAP California Customer Units [18-23]

Category	Pro Forma for California Market				
	Project Completion Year	**5 Years after Completion**	**10 Years after Completion**	**15 Years after Completion**	**20 Years after Completion**
Addressable Market: (A) Current Number of Units in the California Market (no growth)	**8256**	**8256**	**8256**	**8256**	**8256**
Capturable Market: (B) Total Number Installed TAP Units	**0**	**1608**	**3100**	**4810**	**8256**
(C) Market Penetration = B/A x 100%	**0**	**19.5%**	**37.5%**	**58.3%**	**100%**

* Assumes that the 20-year potential market does not grow because of the anticipated difficulties limiting the capturable market explained in following sections below.

Appendix 1

Unit Cost Comparison
TAP is commercially viable because it can demonstrate substantial cost and performance advantages over other available technologies. An expense and profit projection for a TAP 15 ton/day CHP unit is given in the following appendix section. TAP has a simple payback period of 4.4 years for a 20°C unit and slightly better payback of 3.3 years for a 35°C unit. A net present value of $ 1,456,680 and a 24% rate of return for a small 15 ton/day is extremely favorable. The tankage capital cost of TAP and CSTR are comparable, but the TAP high return on investment is due to triple the methane production which results in very low CHP unit capital costs as shown in Table XIII.

Table XIII. CHP Unit Capital Cost Comparison

CHP Process (Investigator)	Unit Cost/electrical output
TAP (Schimel)	$26/Mw-hr
TAP (Boone)	$28/Mw-hr
CSTR (Boone)	$99/Mw-hr
BGCC Gasification (EPRI)*	$60/MW-hr

* gasification is shown here as a comparison purposes, since it is more applicable to dry biomass < 25% moisture content applications

Licensing Strategy:
TMC has chosen licensing as the best commercialization strategy for TAP because the market is simply to large to "grow a venture company exponentially" to meet the demand. Instead, TMC has chosen to control of the source design (patents and/or copyright or non-disclosure agreements) and profit from repetitive licensing of the vanilla design and design customization to a wide variety and large number of customers. TMC will be constantly improving the core design (innovation) to make it faster and do more and then re-licensing the innovation. Part of the license origination fee will go toward supporting the ongoing TAP RD&D program.

The market penetration strategy is to license design engineering firms and equipment manufacturers, utilizing their customer client base for marketing. In the U.S. there are nearly 30,000 private environmental companies (2000 in California) which may be interested in a new business opportunity. There is approximately same number servicing the international market. These vendors welcome the opportunity to make and sell their own brand of the Anaerobic Pump and to bundle it with their standard technologies to a wide variety of application customers. Each distribution may be aimed at a different market sector as shown in Table XIV. The industrial sector, for example, is mainly food companies having large and continuous quantities of waste carbon or proteinaceous biomass. Despite different distributions, each will have the same core designs that are largely compatible. Most of the companies in this licensing pool are small and are servicing a very large and highly competitive disposal market. Because of EPA regulation bias, this group naturally favors sales of existing conventional (textbook) technologies. On the other hand, the majority of environmental companies need proprietary (exclusivity) processes or products to compete with no-bid computer generated conventional design companies (ie. U.S. Filter).

These licensed environmental companies will be using design equations given to them by TMC

technology transfer. They will make their primary income from delivering modified TAP designs that are easy to install and use and which they can support over time. In this way, distributing companies avoid large development expenses and, instead, sell installation support, operation guides, customer-service packages, design expertise, bundled TAP solutions, so that the individuals (farmers) and businesses and the public (wastewater treatment) can purchase whatever level of support they feel they need. TAP is a market flexible product. Small companies will not need to develop a core design, but instead provide modification design, fabrication, and installation service in a convenient package to companies that need technical help solving their unique environmental problem(s). For larger licensee firms, turnkey TAP package units tailored to an exact BTE customer needs could be offered. That BTE customer might need power generated by a TAP-microturbine power unit, assembled at their site in exchange for a proportional payback of the revenues from power utilized and sold, waste disposal charges avoided and green house gas mitigation credits (if applicable). This is a commercialization model that has worked well for the introduction of other "green" technologies, but it does take considerable financial and liability backing.

Since there are many types of biomass fuels available and each has a different compositional and conversion characteristic, a multi-product diversification arrangement is likely as shown in Table XIV.

Table XIV. TAP Market Opportunity Matrix

Priority*	Customer Base & Market Opportunities	Commercialization Approach	Potential Licensees or Competitors (national)
1[a]	Public WWTP TAP systems (Disposal – mainly retrofit Market)	Achieve EPA BAT then TMC negotiate licensure agreements with OEM equipment manufacturers and/or Engineering Design Firms	30,000 U.S. OEM Equipment Manufacturers and Engineering Design Firms, & European PC and P2 Companies (IEA[3]) designing conventional Solids stabilization and thickening units

Appendix 1

Priority*	Customer Base & Market Opportunities	Commercialization Approach	Potential Licensees or Competitors (national)
2[b]	Agriculture TAP CHP Units On-farm Animal and Crop residue feedstocks such as Manures, wasted silage and other herbaceous residues	TMC negotiate licensure agreements with OEM equipment manufacturers and/or Engineering Design Firms	Competition from small Agriculture companies fabricating conventional digestion CHP units like Agway, Duke Engineering, Unisys Biowaste, BioRecycling Technologies, and Larsen Engineers
3	Industrial Privately owned WWTP processing Plant and Animal wastes; market for TAP CHP units in slaughter houses, canneries, stockyards etc.	TMC negotiate nonexclusive licensure to OEM equipment manufacturers and/or Engineering Design Firms	Minor competition – although some industry resistance is expected. Licensees will be designing processes for the new BTE market
4	Agriculture based TAP CHP Units utilizing Biomass to Energy Crops (grains and leafy crop residues like Corn, Alphalfa, sugar beets, tall fescue etc.	TMC negotiate licensure agreements with OEM equipment manufacturers and/or Engineering Design Firms	Minor competition – although some industry resistance is expected. Licensees will be designing processes for the new BTE market

Appendix 1

Priority*	Customer Base & Market Opportunities	Commercialization Approach	Potential Licensees or Competitors (national)
5[c]	Separated wet MSW/RDF to CHP TAP systems, ie. Landfill Mining	TMC negotiate licensure agreements with OEM equipment manufacturers and/or Engineering Design Firms	Minor competition, however a variation on wet Anaerobic Digestion, thermophilic dry processing (developed at NREL), R&D and marketing by Pinnacle Biomass International, (Rivard[1], IEA[3])

*Priority rating represents the product diversification rating
a. Market analysis of WWTP shows that there is demand for faster/lower cost stabilization systems. This market could be easily retrofitted to produce 3X as much methane which will nearly satisfy the energy needs of many of these plants.
b. Market analysis of Agriculture shows that there is a demand for generating power and heat close by to biomass origination site however, the market is very cost sensitive.
c. the cost of producing RDF from raw garbage, in addition to TAP, impacts this markets economics.

Engineering/Technical:
TAP has numerous cost and performance advantages over conventional anaerobic digestion (AD). All prototypes testing to date has met design specification and performance criteria. Table XV compares the performance objectives and outcomes for this verification prototype project.

Table XV. Project Technical Objectives and Outcomes

Performance Measure	**Objective TAP/CSTR Ratio**
Performance Objective:	
Peak specific gas production rate	3 to 1
Peak methane production rate	4 to 1
Methane yield per kg volatile solids	2 to 1
Total volatile solids reduction	3 to 1
Total Chemical Oxygen Demand Reduction	4 to 1
Speed: Stage II maximum velocity, $\hat{m}$ (day^{-1})	10/1
Unit Cost Ratio: $/COD reduction @20°C	0.25/1
Performance Outcome:	TAP outperforms CSTR by
Peak specific gas production rate	3.3 to 1
Peak methane production rate	3.9 to 1
Methane yield per kg volatile solids	1.9 to 1
Total volatile solids reduction	2.4 to 1
Total Chemical Oxygen Demand Reduction	3.4 to 1

Appendix 1

Speed: Stage II maximum velocity, $\hat{m}$ (day^{-1})	10/1
Unit Cost Ratio: $/ COD reduction @20°C	0.29/1

At room temperature, TAP transforms organic solid matter about 2 - 4 times faster (depending on loading) and converts 3-4 times the amount of the feed material to methane than a comparable CSTR unit. TAP costs less than 1/3 to achieve the same amount of conversion to methane (COD reduction). There are no other technical issues that remain to be resolved.

A draft field test plan has been completed which includes RAMD (reliability, availability, maintainability, and durability) and design practices common to conventional digester design. Candidates for a demonstration site have been narrowed to either a pulp and paper mill or a large farm manure + crop residual application in California. The structural integrity (wall bracing) of stage II has been designed for scale-up. This increases the cost of this small volume reactor by 15%. The scale-up unit is expected to out perform sub-scale prototypes because the unit solids capture should improve. Only one TAP field test unit should be needed to verify scale-up technical specifications. The demonstration unit will be operated by a third party with impeccable credentials, Oak Ridge National Laboratory (ORNL) . This testing program should operational for about 2 years.

Legal / Contractual:
The original Anaerobic Pump patents were issued in 1983. These patents covered the structure and fabrication specifics (ie. how to build TAP). In 1987, a patent covering the application of pressure cycling TAP Stage II was issued (ie. how to improve residual conversion). This patent has four more years of eligibility. A new TAP "improvement" patent has been filed with the USPTO covering Biomass to Energy (BTE) applications. This patent explains the method of gas plasticization, pressure program and pressure swing sequence, and process operation via computer control and some new apparatus modification to enable remote energy production systems. This new patent will cover specifics that enable unmanned distributive power operations in remote locations via computer control. There are no outstanding or unresolved IP issues.

The contact information for the new patent pending is:
Jaeckle Fleischmann & Mugel, LLP
Ellwanger and Barry Bldg.
39 St. St., Suite 2000
Rochester New York

This break through technology is in the early stages of the patent cycle. This apparatus and method will continue to undergo "adjustments and modification" to meet the challenge of many new applications. As these new applications emerge, the new improvements will result in new patents that could amount to considerable royalties for the PIER program. Exactly how much profit potential for PIER is indeterminate at this time. However, in view of the large amount and diversity of biomass available in California, the royalty potential could be considerable.

Appendix 1

Environmental Safety & Risk Assessment / Quality Plans:

Safety and Life Cycle Risk

TAP is major step forward in a technology that is centuries old, Anaerobic Digestion (AD). AD safety technology is mature which has enabled low risk deployment around the world. TAP deployment will utilize the same safety designs and off-the-shelf equipment to reduce the impact of failure and assure reliability. Generally, efficient energy producing processes are used forever (timeless). TAP has no apparent life cycle limit.

Regulatory Risks

A new technology must overcome regulatory and public acceptance barriers that can impede commercialization. Just customer acceptance is neither sufficient nor easy to get without regulatory acceptance. Regulators (State and Federal) create specific discharge requirements that new technologies are designed to meet; yet these technologies cannot be used without site-specific regulatory approval. New technologies like TAP that perform far more efficiently but are developed later must compete with the locked in technology upon which the regulation was based. New entrants not only must compete with this entrenched technology, they must also demonstrate to regulators, at the developer's expense, equivalent performance in each jurisdiction and on a case-by-case basis when use is proposed. For this reason, TAP must obtain EPA BAT approval to be allowed to compete in the public disposal market.

Environmental Risks

The impacts of energy recovery from animal wastes using TAP are relatively few and small. In fact, TAP has significant benefits, which avoid many of the problems of conventional farm collection, and waste disposal practices and produces a clean source of energy. By comparison, the main environmental benefits are;

- Livestock farms have in-place, on-site collection facilities, where animal slurries naturally ferment producing methane (a potent greenhouse gas). TAP energy recovery will combust this gas, methane emissions are reduced by converting the naturally produced methane to carbon dioxide (a much less potent greenhouse gas). However, full and effective use of the gas must be achieved by good practice (e.g. avoid venting). The biogas fuel stream is low in sulfur (low combustion to sulfur dioxide) content and very low in particulate emissions. By converting this biomass to methane with TAP, the practice of burning residuals in the field could be eventually eliminated.
- Untreated livestock slurries represent a potential source of water pollution, especially discharge (runoff and groundwater) to watercourses. There may also be significant adverse effects from odor problems, possible pathogen and parasite spreading and possible nitrate leaching. With secondary polishing of discharge effluent, TAP will meet or better the pertinent California Air and Water Quality Standards listed in Table XVI.

Table XVI. Pertinent California Air[1] and Water Quality[2] Standards

NH_3 (ppm)[3]	COD limit (ppm)	H_2S limit (ppmv)[1]	E. Coli Limit (orgs/100 ml)	Nitrate limit (ppm)
6	20	<0.06	200	1

Appendix 1

(1) California Ambient Air Quality Standards (California Air Resources Board, Table of Standards in Section 70200 of Title 17 of the California Code of Regulations.) Very low limit olfactory sensitivity. See California Ambient Air Quality Standards below.
(2) California water quality standards are equivalent to federal criteria under Clean Water Act Section 303(c). California Water Code Sections 13170, 13170.2, 13240,13247.
(3) ppm means parts per million

Large centralized TAP facilities serving several small farms can incur minor environmental impacts associated with slurry transportation (farm to TAP site), visual intrusion and minor fugitive odor problems. Conventional anaerobic digestion processes yield a solid waste residual that needs further processing (perhaps processed aerobically into a peat-substitute compost) and disposal ($) in a landfill. Residual processing activity can emit moderate amounts of odor causing gases. TAP nearly eliminates the need to handle or post process a residuals further reducing liquid and gaseous impacts on the surrounding environment. Methane is an explosive gas, so any accidental release represents a potential fire risk. TAP uses gas controlled process operations (flaring and flame traps) which sufficiently reduces this risk. A summary of the expected environmental impacts for farm slurry wastes is given in Table XVII.

Table XVII. Farm Quality Plan: TAP Environmental Risks for Agricultural Slurry Wastes

Activity	Receptor	Potential Impact	Range	Priority
PLANT				
RESOURCE EXTRACTION	Various	Emissions/Noise	L/R/G	Low
RESOURCE TRANSPORT	Various	Emissions/Noise	L/R/G	Low
MATERIALS PROCESSING	Various	Emissions/Noise	L/R/G	Low
COMPONENT MANUFACTURE	Various	Emissions/Noise	L/R/G	Low/Med
COMPONENT TRANSPORT	Various	Emissions/Noise	L/R/G	Low
PLANT CONSTRUCTION				
Emissions	Various	Emissions from construction activity and road traffic	L/R/G	Low
Amenity				
Noise (from construction activity including road traffic)	General public	Noise amenity	Local	Low
Visual intrusion	General public	Visual amenity	Local	Low
Ecology				
Noise/construction activity	Ecosystems	Disturbance	Local	Low
Occupational health	Workers	Accidents	Local	Low

Appendix 1

	Employment	Increased employment	L/R	Low
WASTE COLLECTION				
Emissions	Various	Reduce methane emissions	Global	**Medium**
WASTE TRANSPORTATION				
(for centralized facilities only)	Various	Emissions/Noise	L/R/G	Low
GENERATION				
Emissions	Various	Fugitive emissions	L/R/G	Low
Slurry digestion	Ecosystems	Reduced risk of water pollution	Local	Low
Amenity				
Noise	General public	Noise amenity	Local	Low
Odors	General public	Reduced odor for small schemes - might be increased for centralized facilities	Local	Low
Visual impact	General public	Visual intrusion	Local	Low
Occupational health	Workers	Accidents	Local	Low
	Employment	Increased employment benefits	Loc/Reg	Low
Public Health				
Fires/explosion	General public	Gas combustion with controls	Local	Low
Ecosystems				
Land use	Natural ecosystems	Loss of habitat	Local	Low
	Agriculture	Loss of land	Local	Low
Activity	Natural ecosystems	Disturbance	Local	Low
DECOMMISSIONING	Various	Emissions/Noise	L/R/G	Low

Impact Range: L/R/G means Local, Regional, and Global
Impact Priority: L/M/H means Low, Medium, and High impact

Appendix 1

Strategic:
California PIER policy objective is to ensure the transition to a competitive electricity market structure while preserving a commitment to developing diverse, environmentally sensitive electricity resources. Currently, rate payers are supporting ($540 million) the development of renewable electricity-generation technologies and renewables market for California. Clearly, TAP will impact PIER objectives to develop distributed and environmentally sensitive energy resources. TAP deployment could significantly boost California's projected growth for "digester gas technology" of only 50Mw by year 2007 to more than 600 MW. California energy consumption is expected to increase by 50% by year 2010 that should expand further the need for TAP.

The development of TAP will help California and the nation meet renewable energy objectives. The large amount of wet biomass available has a nearly zero or negative value. Hence, TAP can be deployed without a carbon tax (greenhouse gas mitigation credit) and meet methane (GWP=21) reduction initiatives. Again, the greatest chance of success will occur where disposal issues prevail.

The potential of TAP was originally recognized by the Department of Commerce (DOC), National Institute of Standards and Technology (NIST, I&I #707). Department of Commerce (DOC) is mainly interested in reducing oil imports by boosting domestic production from renewable biomass. On NIST recommendation, the Department of Energy (DOE) partially funded this project with an I&I grant of $100K (#GO10300). The California Energy Commission provided the remaining funding with PIER grant #99-38. The Department of Energy (DOE), Forestry Products group, has promised an additional $500K-600K to support a TAP demonstration plant to be sited at a pulp and paper mill or a farm site. DOE, Office of Industrial Technology has issued a FACT sheet for the Anaerobic Pump which explains the potential for agricultural applications (prior appendix section). This opportunity is only awaiting matching funds.

All federal and state R&D BioEnergy programs (SERBEP and NEMWI) have been notified of the TAP technology breakthrough. Discussions with these organizations concerning applications and funding opportunities in their respective geographic regions are ongoing.

Production Readiness & Commercialization:
Many individuals have contributed to the TAP development. Full development plans (for both licensing and venturing) have been written at considerable expense. TMC has devoted a large portion of its resources to presenting the TAP technology to large U.S. corporations capable of partnering a full commercialization. Large corporations such as Monsanto, Dupont, Air Products, Zimpro and Nalco were approached first since the TAP gas products, ammonia and methane, are the building blocks of amino acids. Many of them were also involved in the disposal industry. More than 30 presentations have been given to date and all were well received. Despite the effort and expense, a committed partner or consortium of partners to help complete commercialization is still needed.

The established chemical and environmental companies have decided that TAP is invasionary, a cannibal technology. The not invented here (NIH) syndrome and fear of obsolesce (FOO) are major factors in U.S. corporate RD&D decision making. TAP will replace about half of the unit

processes in a conventional waste treatment plant. Full energy recovery and onsite use could cut in half the cost of wastewater treatment. TAP would replace many of the old textbook technologies, the basis of the disposal industry income (nearly $40 Billion/year in the U.S alone). Product lines would undoubtedly shrink. Because of this, potential partnering companies have often side-stepped participation by simply demanding the right to use all technical information disclosed during technical presentations without restriction (non-disclosure refused). In many other cases, TMC presenters have been told directly "we'll just wait for your patents to run out" even when they're aware that new patents are going through the patent office. All this seems to run counter to "the need for exclusivity" to boost corporate competitive advantage for competing in the new international market. Corporate attitudes underscore the necessity for government RD&D assistance to complete TAP development and commercialization.

International companies are currently being approached. A new list of potential licensing partners has been prioritized according to Table XIV. Domestic engineering firms and equipment manufacturers have been notified of the licensing opportunity. The top licensing candidates are those companies that are emerging and seeking new processes like TAP that will dominate the combined disposal and Biomass to Energy (BTE) markets in the future.

The U.S. environmental regulation has a more severe impact on the growth of environmental market than other technology markets influenced by government regulations. U.S. environmental regulators (State and Federal) are primarily interested in ensuring the widespread use of existing disposal technologies, particularly those that can meet environmental requirements at the lowest cost of performance. In contrast, the domestic energy market structure is heavily dependent on the supply of fossil and nuclear fuels and is in transition to a more competitive marketplace. The result is a competitive disadvantage for new environmental technologies. The situation increases risk for new technology entrants into the market and limits the attractiveness to investors. TAP is unique, however. It is not just another disposal technology. Its end-of-the-pipe economic and environmental strengths appeal to industry, which are licensee industrial clients. This is the route chosen to overcome regulatory bias. Table XVIII shows the scope of the critical commercialization risks and planned remedies.

Public Benefits / Costs

For all stakeholders, especially the public, the benefits far outweigh the costs. The advantage that TAP has in this market is it's strong economics (high profitability and short payback), operation simplicity, renewable energy characteristics, and pollution control potential. For these reasons, TMC believes the potential benefits justify investing in a commercial demonstration plant. The cost/Benefit analysis shows that venture capitalists could easily see a 10 fold increase in their investments in 5 years. The B/C analysis shows that for every private dollar invested in TAP R&D, $11.2 is profited. For every public dollar invested in TAP R&D, a whopping $8070.00 is returned. See Table XIX for the public benefit detail.

Nationally, the BTE industry currently supports about 66,000 jobs for an installed 10,000 Mw_e of power (6.6 jobs/Megawatt of installed power). Renewable energy creates jobs such as design, production, installation, and system operations. Typically, there are opportunities for engineers, programmers, skilled assembly workers, plumbers, electricians, mechanics, plant operators, and marketing and sales experts. Jobs will be created indirectly in the production of materials, transportation and business. Expanded biomass power deployment will create high skill, high

value job opportunities for utility and power equipment vendors, power plant owners and operations, as well as agricultural equipment vendors. By the year 2010, TAP deployment could significantly boost California's projected growth for "digester gas technology" power facilities from 50 Mw to 600 Mw supporting nearly 4000 new jobs. Much of the increase will come from converting biomass residues (crop and sludge residuals) and will substantially revitalize rural economies. These jobs will help individuals and small farms and strengthen California economy.

Table XVIII. Commercialization Risks and Remedies

RISKS & BARRIERS	REMEDIES
Need for committed commercializer(s)	Licensing effort: Focus on second tier Environmental companies who are more interested in gaining market share (less interested in protecting product line) and not as concerned with NIH and FOO
Potential risk of residue supply interruption	Mitigated by supplies from multiple producers of different residue types.
Critical production process: Manufacturing TAP Stage II with structural bracing	Structural Analysis has been done and the increase in cost is about 15% (Stage II is only 1/3 of the system volume)
Manufacturing Cost Analysis	See the following for 15 ton/day Cost analysis
California's biomass market is well developed slowing market penetration	Focus on only those large customers motivated by difficult environmental problems.
Farm market is very cost sensitive	Focus large farm cooperatives with payback from power sales and disposal costs avoided
Very slow and expensive EPA BAT approval needed for public treatment plants	EPA has been given a copy of this verification project for review and TMC has requested approval of BAT rating for TAP
Market driver is government pollution regulations	Emphasize profit characteristics of TAP to customers and distributors; making economics the TAP driver.
Private sector financial backing for Biomass to Energy projects is virtually nonexistent	Continue to pursue Government investment and marketing licenses. Combine Government $ + license revenue to achieve development and commercialization goals
Cost of Multiple Performance Demonstrations	Notify all the state and fed agencies about the scale up demonstration & performance project and try get them all to sign on to the one verification by one demonstration operated by one verifying entity, ORNL

Table XIX shows the tangible public benefits of deploying TAP. This estimate can be

considered a minimum public benefit since intangibles and aesthetics are not included in the calculation. They are listed after Table XIX. All benefit/cost calculations estimates are shown in the following TAP Market Estimation section. By inspection, the greatest benefits are due to saving landfill space (72.5%), fossil fuel or grid energy saving (19.8%), and employment(7.6%). A comparison of the public and private benefit/cost ratios is given in Table XX. The public benefit/cost may appear to be unrealistic at first glance. However, considering the California heavy demand-short supply energy picture, the potential contribution from wet biomass and the small PIER investment required, the large benefit/cost ratio is justified. PIER contribution to complete TAP development is only $671K.

Table XIX. Value of Annual Public Benefit

Public Benefit Category	Yearly Total	% of Total
	(Million $)	Public Benefit
Employment	139	7.6
Environmental		
Energy Saving	360	19.8
Fossil Fuel CO_2 avoided	0.017	0.009
Cost of Landfill Space Avoided	1317	72.5
Stream and Groundwater Cleanup Avoided	1	0.05
Employment & Environmental subtotal	1817	100.
Intangible, Aesthetic and Other Benefits	?	0 (see listing below)
Total Benefits	1817	100.

The intangible, aesthetic and other benefits from TAP deployment are:

- diversifying and securing energy supply, thereby promoting price stability.
- providing job opportunities in rural areas urbanization is slowed.
- Promoting the decentralization of the energy market by providing this small, modular, rapidly deployable to rural areas and the vast majority of the biomass resources.
- boosting local economies by reducing their dependence on fossil fuel imports.
- accelerating electrification of rural communities (under served or low voltage areas).
- improving community health (odor, pathogen control, a generally cleaner environment).
- In the US, low interest municipal revenue bonds can be used for TAP plant financing.
- In the US, the TAP plant can be depreciated as a certified pollution control facility for Federal tax purposes over a five year span.
- In the US, TAP plant owners are eligible for investment tax credit and energy tax credit based on a percentage of the project facility capital cost.

Table XX. Comparison of Benefit/Cost Ratios*

California Public	Industrial Customer	Licensee	Licensor (TMC)
8070/1	4.5/1	3.7/1	3/1

*see TAP Market Estimation section for calculations

Appendix 1

Fuel or Energy Source CO_2 Emission Coefficients for GWP Comparisons

Fuel	Pounds CO_2 per Unit Volume or Mass	Pounds CO_2 per Million Btu
Petroleum Products		
Aviation Gasoline	18.36 per gallon	152.72
Distillate Fuel (No.1, No.2, N0.4 Fuel Oil and Diesel)	22.38 per gallon	161.39
Jet Fuel	21.44 per gallon	159.69
Kerosene	21.54 per gallon	159.54
Natural Gas and Other Gaseous Fuels		
Liquefied Petroleum Gases (LPG)	12.20 per gallon	138.85
Motor Gasoline	19.64	157.04
Residual Fuel	26.03	173.91
Methane	116.38 per 1000 ft^3	115.26
Flare Gas	133.76 per 1000 ft^3	120.72
Natural Gas (pipeline)	120.59 per 1000 ft^3	117.08
Propane	12.67 per 1000 ft^3	173.91
Coal		
Anthracite	3852.16 per ton	227.40
Bituminous	4921.86	205.30
Sub-bituminous	3723.95	212.70
Lignite	2733.86	215.40
Renewable Sources		
Geothermal Energy	0	0
Wind, PV and Solar Thermal	0	0
Wood and Wood Waste	3814 per ton	221.94
Municipal Solid Waste	1999 per ton	199.85

Waste Biomass Type Biodegradability Constants

Waste Type	B_o (gm VS Destroyed/gm VS added) as $\theta \rightarrow \infty$	Range	Reference
50:50 WAS + PS Sludge	0.35	0.3-0.4	this study*
Beef (dirt)	0.50	0.4-0.6	Hill[24]
Beef (confinement)	0.70	0.6-0.8	Hill[24]
Dairy	0.40	0.3-0.5	Hill[24]
Swine	0.90	0.8-1.0	Hill[24]
Poultry (layers)	0.80	0.7-0.9	Hill[24]
Poultry (broiler)	0.70	0.6-0.8	Hill[24]

* Extrapolated estimate from CSTR prototype data; $\theta \rightarrow \infty$ means the HRT approaches infinity

Appendix 1

Intentionally blank

Insert California Air regulations here; CA-ambient-airqual-stds.pdf

Appendix 1

20°C Comparison Calculation Worksheets
The Anaerobic Pump Combined Heat and Power System
<u>15 Ton Total Volatile Solids/day</u>
Worst Case (Poor Substrate & Poor Weather Conditions) Scenario

The System Characteristics Assumed:

1) Business Model: CHP Demand Side, Two Revenue Stream, (1) Electrical Utilization onsite: 80% of production @ 7.5 cents/kWh and 20% sale to grid @ 6.0 cents/kWh; (2) Tipping fee for feedstock @ $30/ton, 40% solid TS or equivalent. Recovered excess heat for onsite use.
2) Alternate Business Model: CHP Supply Side, Two Revenue Stream, (1) Electrical Utilization: 100% of production sale to grid @ 6.0 cents/kWh; (2) Tipping fee for feedstock @ $30/ton, 40% solid TS or equivalent. Combined Cycle excess heat recovery by a secondary steam turbine.
3) Feed Substrate: 50:50 Mixture (WAS + Primary) of STP Sludges @ 1.5% TS
4) System Organic Loading: 30,000 #TVS/day (42,857 #TS/day) = 15 ton TVS/day
5) <u>System Operating Temperature: 20° C (68°F) **ROOM TEMPERATURE**</u>
6) System Tank Volume: 240,000 ft^{3} (1,795,200 gallons)
7) System Unit Organic Load: 0.125 #TVS/ft^{3}/day
8) Hydraulic Residence Time (HRT) = 6 days
9) Feed Slurry Flow Rate: 40,000 ft^{3}/day (299,200 gallons/day)
10) Physical Location: Outdoors
11) Air Temperature = -5°C
12) Temperature of Incoming feedstock and earth insulating floor and walls = 10°C
13) Heat Exchanger Efficiency = 50%
14) Sludge Specific Heat = 4200 Joules/kilogram ^{o}C
15) Biogas stream is 59% Methane (average of project steady state data)

Definitions:
TAP means 2 stage Anaerobic Pump
CD means single stage conventional complete mix by stirring CSTR
CHP means Combined Heat and Power
TS means Total Solids (inorganic + organic)
TVS means Total Volatile Solids (organic fraction)
BTU means British thermal unit
BTUH means British Thermal Units per Hour
kWh means Kilowatt-hour of electrical power
kJ = Kilojoules
kg = kilogram
cf = cubic feet

Units Conversions:
1 kW = 3,413 BTUH, kWh = 3,600 Kilojoules, kJ = 0.95 BTU, kg = 2.2 pounds,
cf = 7.48 gallons

Appendix 1

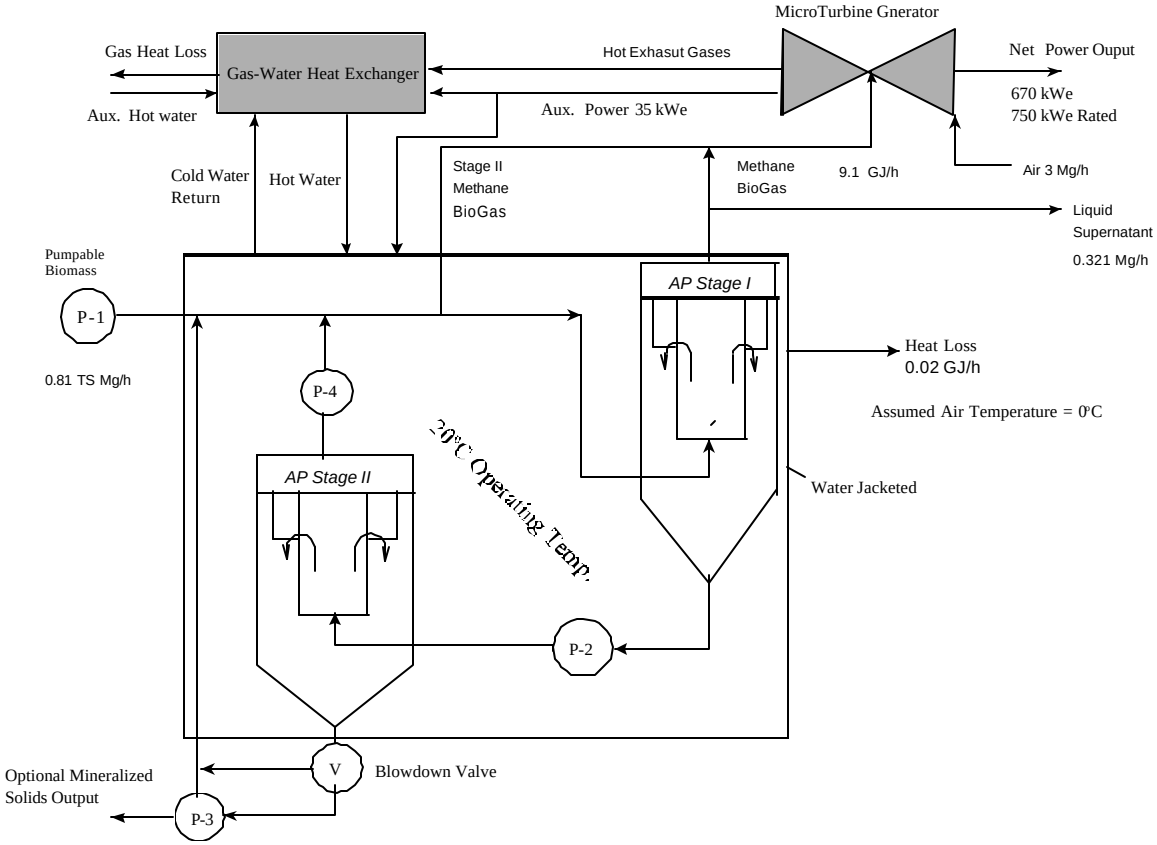

Fig I. Anaerobic Pump Material and Energy Balance

15-Ton/Day ANAEROBIC PUMP CHP BIOMASS TO ENERGY @ 20°C

TAP Energy Balance (GJ/hr)

Heat In	
Biomass to TAP (dry weight)	13.95
Process Power:	
Process Pumps	-0.029
Heat Exchange	-2.474
Other (grid power)	0.0001
Total	11.474

Heat Out	
TAP Heat lost in effluent	5.06
TAP Heat lost to surroundings	0.02
MT Power (27.1%)	2.46
MT-HE Exhaust Gas	2.64
Heat Exchange Loss	1.09
Other Heat losses	0.204
Total	11.474

*CHP means Combined heat and Power

* Mg means Million (10^6) grams

* GJ means GigaJoules (10^9) Joules

TAP Material Balance (Mg/hr)

Mass In	
Organic Biomass to TAP (VS)	0.584
Organic Biomass to TAP (VS)	0.630
Inorganic Biomass to TAP (IS)	0.227
Feed water	53.23
Air (for combustion)	3.000
Total	57.04

Mass Out (Mg/hr)	
Moisture in Gas @ 20°C	0.007
Effluent Biomass (VS+IS)	0.321
Effluent Water	53.23
MT Gas Out Heat Exchanger	3.482
Total	57.04

TAP Performance Summary

Annual capacity factor, %	85%

Appendix 1

Net Heat Rate kJ/kWh	20,820
Thermal Efficiency, %	21.4

Appendix 1

TAP 20°C Balance Assumption Notes:

i. Material Balance: The performance data from the current Oregon prototype were used to generate the mass balance shown above for the 20°C, 15-ton/day base case. This projection is valid because biological processes (linearly) scale well. Their performance generally improves with scale. In addition, the anaerobic Pump will perform better with higher nitrogen (protein) biomass feeds, since ammonia in biogas is the key plasticizer. Some convertible mass is lost the system effluent, which requires some polishing. This amount is usually small (<10%) and can be recycled back to TAP influent if 100% solids conversion is desired. The process effluent has a low organic concentration that makes it appropriate for sewer disposal. If sewer disposal of the effluent is not available, the effluent needs polishing of approximately 1000-2000 mg/l soluble Chemical Oxygen Demand (COD). This oxygen demand is mostly composed of lower fatty acids, which are perfect substrates for aerobes (aerobic treatment process). The solids generated in the aerobic unit would then be recycled to the Anaerobic Pump, to recoup the energy input and complete the closed loop. In farm applications, lagooning would be a simple solution with the effluent from the lagoon cycled to the irrigation water to provide crop nutrients. TAP produces more than three times the Methane (energy) output of a conventional complete mix digestion unit (CMSTR) in half hydraulic residence time. See below for comparison. There are no air/gaseous or liquid (with effluent polishing) emissions using the Anaerobic Pump. This gives TAP a huge environmental advantage in BioEnergy applications.

ii. Energy Balance: The energy balance for Anaerobic Pump using biofuels such as sludges, animal wastes and crop residues is low because the energy density of the feedstocks is low. However, the fuel price ($/ton) is negligible because biomass residues are generally free and the cost of pumping them is very low. If the biomass is a residue in often has negative value (cost of disposal). Hydraulic delivery is very efficient compared to other forms of biomass delivery. The energy for raw material preparation and delivery to TAP is only about 5.0 MJ/ton dry weight (delivery pumping + maceration costs). The energy for TAP internal recycling and pressure cycling is about 10.0 MJ/tonne dry weight. Heat must be added to raise the feedstock temperature from about 10°C to 20°C and then maintain a consistent process temperature of 20°C. The two TAP reactors are water-jacketed. The specific heat for the biomass slurry input is 4200 Joules/kg ^{o}C. The heating energy needed to raise the feedstock temperature and maintain the reactors at room temperature (20°C) is about 0.85 GJ/ton, (2.5 GJ/ton if 35°C is to be maintained). Of course, the more Methane used to maintain the TAP reactor temperature (over and above waste heat), the less gas there is for sale. Energy input values will vary depending on ambient temperatures and the amount of insulation affordable. TAP will particularly suitable for distributed energy production since the gas product can be transported long distances via pipeline at low cost to a centralized electrical facility or converted onsite to electricity as depicted here.

In this base case, the conversion to electrical energy is done with a 670-kW theoretical (750 Kw_e operational) rated Microturbine. A 9.16 GJ/hr biogas stream containing 56%

Methane is sufficient flow and energy density. This Solo Microturbine is naturally aspirated and does not need a front-end compressor. The characteristics of the 750-kW rated Microturbine unit are as follows; Cost $700/kW, O&M $0.009/kWh, Electrical efficiency 27.1%, Heat Rate = 12,600 kJ/kWh, Thermal Output 3.7 MMBTU/hr, Overall efficiency 85%.

If you add some energy for the plant construction to the feedstock delivery and reactor maintenance (815MJ/tonne + 385 MJ/tonne), you have ~1.2 GJ/tonne dry weight invested in the material which has a gas energy content of 13.22 GJ/tonne dry weight (or about a 11:1 energy output to input ratio). The great improvement, of course, is due to the advanced volatile wet solids conversion, only achievable using the Anaerobic Pump. The Microturbine conversion efficiency is only 27.1%, which is typical of electrical conversions. The overall combined thermal efficiency is about 21.4% is near the current grid efficiency. Not bad, when you consider that this is conversion of very dilute wet-waste biomass material being converted all the way to electricity. The process economics looks even more attractive when you convert the biogas as efficiently as oil for space and hot water heating. In addition, TAP Global Warming (GW, CO2 and CH_4) abatement strategy is considerably more efficient than alternative technologies like corn or cellulosic ethanol fermentation or pyrolysis/gasification power. In the future, if credits are given for CO_2 abatement, TAP should have a huge advantage. See the following, CHP analysis.

CMSTR 20°C Balance Comparison Notes:

Comparable 15-Ton/Day CSTR CHP BIOMASS TO ENERGY @ 20°C

TAP Energy Balance (GJ/hr)

Heat In	
Biomass into TAP (dry weight)	13.95
Process Power:	
Process Pumps (feed pump only)	-0.010
Heat Exchange	-0.723
Add Heat for heat exchanger	1.504
Other (grid power)	0.0001
Total	14.721

Heat Out (GJ/hr)	
CSTR Heat lost in effluent	10.0
CSTR Heat lost to surroundings	0.02
MT Power (27.1%)	0.74
MT-HE Exhaust Gas	0.80
Heat Exchange Loss	1.52
Heat losses	1.641
Total	14.721

* Mg means Million (10^6) grams
* GJ means GigaJoules (10^9) Joules

TAP Material Balance (Mg/hr)

Mass In	
Organic Biomass to CSTR (VS)	0.584
Inorganic Biomass to CSTR (IS)	0.227
Feed water	53.23
Air (for combustion)	0.909
Total	54.95

Mass Out (Mg/hr)	
Moisture in Gas	0.002
Effluent Biomass	0.566
Effluent Water	53.23
MT Gas Out Heat Exchanger	1.152
Total	54.95

*CHP means combined heat and power

Appendix 1

CSTR Performance Summary

Annual capacity factor, %	85%
Net Heat Rate kJ/kWh	73,421
Thermal Efficiency, %	5.0

Appendix 1

If you replace the TAP unit shown in the above graphic with an EQUAL VOLUME and EQUALLY LOADED conventional DIGESTER CSTR, essentially the INPUT accounting remains the same except there is slightly less pumping expense because there is no recycle with a single stage digester. The accounting is shown in the above table. The output accounting, however, is drastically changed because the loss of biomass in the effluent causes a drastic loss in methane production. The electrical energy production capacity drops to only 0.74 GJ/hr (190kW) and thermal efficiency drops to only 5%.

i. <u>CSTR Material Balance:</u> The performance data from the current Oregon prototype were used to generate the mass balance shown above for the 20°C, 15-ton/day base case shown above. The material balance shows a 26%+ volatile solids reduction and the production of 0.26 m^3 Methane/(kg of Volatile Solids added). Most of the convertible mass is lost the system effluent. Post digestion with solids separation, thickening and effluent polishing before discharge will be required. The amount of the feed solids exiting the reactor with the effluent is usually large (<60-70% %) and cannot be recycled back to influent for recovery (to further processing). This process effluent can be discharged to sewer, but would require an excessive sewer discharge fee. In farm applications, sludge lagooning can be a solution but lagoon discharges have been linked to foul odors and waterway pollution. The sludge is probably not desirable for land/crop application. By contrast, this is the reason why TAP is so desirable.

ii. <u>CSTR Energy Balance:</u> The energy balance for the CSTR shows why Anaerobic Digestion in general is so rarely considered for Biomass to Energy (BTE) applications. Even though there is less energy expended for recycling and the CSTR is a single stage reactor design requiring less investment, so little conversion is achieved that it makes the process marginally economic. TAP changes this situation drastically. Please see the following CHP accounting.

<u>20°C 15 Ton/Day Income Comparison Worksheet</u>

System Production @ 20°C, Data:	**TAP**	**CONVENTIONAL CSTR Digester**
Total Biogas Production @ 20°C, SCF/Day	316,800	96,000.
Heating Values, BTU/SCF (methane)	650.	650.
Available Energy, BTU/Day	205,920,000.	62,400,000.
Avg. Available Energy BTU/Hr (GJ/Hr)	8,580,000. (9.1)	2,600,000. (2.7)
Electrical Conversion Income (80% facility used + 20% Sales):		
Electrical Conversion Method >	Microturbine	Microturbine
Electrical Efficiency, %	27.1	27.1

Appendix 1

System Production @ 20°C, Data:	TAP	CONVENTIONAL CSTR Digester
Theoretical Electrical Capacity, kW	670	190
Actual Generator Capacity, kW	750	215
Avg. Operating Hours, Hrs/Day	24	24
Electricity produced, kWh/Day	16,080.	4,560.
Net Generator Capacity Factor, %	85	85
Net Electricity Produced, kWh/Day	13,668	3,876
Plant Availability, %	85	85
Avg. Operating Days, Days/Yr	310	310
Net Electricity Produced, kWh/Yr	4,237,080.	1,201560.
Internal Utilization Factor, %	80	80
Electricity Saved, kWh/yr	3,389,664.	96,1248.
Electricity Saved Value, $/kWh	0.075	0.075
Electricity Saved Value, $/Yr	**254,225.**	**72,094.**
Electricity Sold, kWh/yr	847,426.	240,312
Electricity Sold Value, $/kWh	0.06	0.06
Electricity Sold Value $/Yr	**50,845.**	**14,419.**
Thermal Conversion Income (Heat $ Avoided):		
Heat Conversion (MicroT exhaust to hot water)	Exhaust Heat Exchanger	Exhaust Heat Exchanger
Heat Required to maintain Operations @ 20°C (BTU/HR)	2,345,300.	2,345,300.
Net Heat Available to Operation (BTU/Hr)	2,502,370.	(1,584,163)
Avg. Operating Hours, Hrs/Day	24	24
Thermal Energy Produced, BTU/Day	60,056,880.	(38,019,912)
Net Thermal Capacity[1], %	90	90
Net Thermal Energy Produced, BTU/Day	54,051,192.	(34,217,921)
		85

Appendix 1

System Production @ 20°C, Data:	TAP	CONVENTIONAL CSTR Digester
Plant Availability, %	85	
Avg. Operating Days, Yr.	310	310
Net Thermal Energy Produced, MMBTU/Yr	16,755.	(10,608)
Utilization factor, % (20% wasted)	80	80
Thermal Saved, MMBTU/Yr	13,404.	(8,486)
Thermal Saved value, $/MMBTU	4.00	4.00
Thermal Saved Income or (Expense), $/Yr	**53,618.**	(33,944)
Net Disposal Income (Disposal $ Avoided)		
Estimated from Tipping Fees at Landfill[2] ($30/wet ton), $/Yr	**$ 331,833.**	**$ 94,667.**
Greenhouse Gas Mitigation Credit (emissions avoided)		
Potential for: @$2.00/MMBTU (or $5/ton CO_2) value for the gas produce	Potential 104,118.	Potential 8,154.
Revenues from irrigating with effluent high in Nitrogen and Phosphorus (fertilizer avoided – farm applications only)	Not considered	Not considered
Sewer Surcharge Fees Avoided	Not considered	Applicable

1. Energy lost in storage and transfer operations; energy density of sludge = 7404 BTU/#TS dry
2. A disposal wet ton is assumed a 40% solid thickened over a discharge limit allowable of 5000 ppm TS

Total Yearly Income (TYI) = Waste disposal net + Heat avoided + electrical sold + electrical avoided

TAP Total Yearly Income: 331,833. + 53,618. + 50,845. + 254,225. = + **$ 690,521.**

CSTR Total Yearly Income: 94,667. -33,944. + 14,419. + 72,094. = **+ $ 147,236.**

Remarks: This economic evaluation shows why a CSTR would not be appropriate for 20°C BioEnergy applications. The net income for the CSTR operation would be $147,236/year. A CSTR doesn't produce enough heat from the electrical generation to maintain the worst case scenario of maintaining culture temperature at 20°C. In addition, the low volatile solids reduction would require additional solids thickening and transport costs (not included in costs). However, if the operation temperature is increased to 35°C and the influent solids are thickened

Appendix 1

enough, then the methane generation is enough to maintain the CSTR culture at 35°C. Both thickening and the 35°C culture temperature would be required just to achieve a small profit for most substrates.

20°C 15 Ton/day TAP Expense Worksheet

Cost to Customer Item	Description	Capital Cost ($)	Install Cost ($)	Total Cost ($)	Expected Life (yrs)	Annual O&M Cost ($/yr)
Component Cost	20°C Operation					
Spec. 2 reactors-4 pumps[1]	Fabrication & Assembly Sale Price	1,436,000.	159,000.	1,595,000.	20	Pumps: 4000.
Gas Storage	Flexible gas bag	370,000.	15,560.	385,560.	15	0.
Gas Treatment	Water traps, flame arresters, iron filings	6,170.	2,468.	8638.	20	0.
Gas Handling	Piping, gas meter controls	20,000.	5,000.	25,000.	20	200.
Gas Conversion 670 kW	Engine generator w/ heat recovery & Controls + backup	469,000.	33,750.	502,750.	20	38,396.
Energy Control+	Utility interconnect	5000.	1000.	6000.	20	0.
Emissions Control[2,3]	Effluent polishing	0.	0.	0.	-	0.
Safety	CH_4 monitors	500.	100.	600.	8	0.
Sub-Total	Capital costs	2,306,670.	216,878.	2,523,548.		42,596.
Miscellaneous Costs						
Contingencies	5% of Capital Costs			126,177.		n/a
Misc Engineering	Misc. services			4,000.		n/a

Appendix 1

Cost to Customer Item	Description	Capital Cost ($)	Install Cost ($)	Total Cost ($)	Expected Life (yrs)	Annual O&M Cost ($/yr)
Misc. Permits	State, local permit Fees			500.		n/a
Misc. Start-up Services	Microturbine - generator & reactor startup			1,000.		n/a
Taxes	5% of capital Costs			126,177.		n/a
Legal	None			0		n/a
Shipping	Component shipping			22,540.		n/a
Other	None			0		n/a
Subtotal				280,395.		
Other Op. Costs						
Operator Time	1 man-hour/day @ $10/hr			n/a		3,100
Insurance	1% of capital			n/a		14,321.
Miscellaneous	Spare parts			n/a		200.
Subtotal		-	-	-	-	17,621.
Totals	20°C TAP System			2,803,943.	20 years	60,217.

1. Includes (20% of fabrication cost) Engineering Fee: $2,102,957 CAP + $ 420,591Design
2. Assumes farm irrigation spreading or sewer disposal of effluent in an urban area at zero cost
3. If onsite secondary treatment (polishing) is required (if one doesn't exist), estimate by $0.00065/gal treated which includes debt service; 299,200 gpd x 365 days/year x ($0.00065/gal) = $ 70,985/year, which would lower the net yearly income by about 10%.

TAP Economic Evaluation:
*This analysis ignores cost savings realized by eliminating the cost of feedstock thickeners, sedimentation chambers, processing elutriation chambers, and stabilized sludge thickening.
*Assumed worst case discount rate = 10%

1) TAP Customer Simple Payback (SP) Calculation:

Appendix 1

$$SP = \frac{\$\ \text{Total Capital Cost}}{(\text{Income - O\&M})} = \frac{\$\ 2{,}803{,}943.}{(690{,}521 - 60{,}217)} = \frac{\$\ 2{,}803{,}943}{630{,}304} = 4.4 \text{ years}$$

New Unit Customer Evaluation:
2) TAP Internal Rate of Return (IRR) = 20%
3) TAP Net Present Value @ 10% discount = $ 2,329,264
4. TAP Unit Capital Cost = $ 3442/Kw (is expected to lower as the technology matures)
5) TAP Cost per Megawatt-hr = $ 28/Mw-hr (nearly half gasification averaging ~$ 60/Mw-hr)
6) CSTR Cost per Megawatt-hr = $99/Mw-hr (*assumes the cost of the CSTR is the same as TAP since they are the same Volume and the difference cost of the electrical generation is small compared to the cost of solids handling and disposal)
7) CSTR Retrofit to TAP technology would cost would be approximately ½ the capital cost of a new TAP unit.

Appendix 1

California Biomass, Market and Benefit Calculations

A. California Potential Market of Wet Biomass

Biomass Source	Number of Plants or sites in California	Volatile Biomass Produced (Dry tons/year) **	Annual Methane Production (10^6 SCF/year) (MW)	References	Notes
Municipal:					
Wastewater Treatment	236	1,700,170.	27,202 (272 MW)	Update: Biosolids Management Practices Methods in the State of California, CASA, Dec. 20, 1999	80% STPs already use conventional digestion
RDF/MSW – Active and Inactive Landfills	243	3,429,488.	55,870. (560 MW)	"Inventory of Methane Emissions" By Harvey Augenbraun, Elaine Matthews, and David Sarma ; The SWIS Database	
Agriculture:					
Livestock Waste Management	20,000	32,439,000..	512,000. (5137 MW)	1992 Agriculture Census for California	26% of National production
Crop Residuals	56,000 and 7.7 million acres	7,700,000.	123,200.(1236 MW)	(1) 1992 Agriculture Census (2)"Methane Recovery from Animal Manures", P. Lusk, NREL 1998.	Field burning is being legislated out of existence
Private Industry:					

Appendix 1

Biomass Source	Number of Plants or sites in California	Volatile Biomass Produced (Dry tons/year) **	Annual Methane Production (10^6 SCF/year) (MW)	References	Notes
Pulp and Paper*	15 of 37 mills producing 5508 tons product/day	119,280.	1908. (19 MW)	(1) Lockwood Post Directory (2) "The Search for Sludge Disposal Solutions", James R. Thompson, Thompson Avant International Inc. Atlanta, Georgia	2% of national production of 100 million Tons/year
Food Processing*	8,184* population basis	?	?	(1) 1992 Food Processors U.S. Census	55,000 facilities nationally x 15% of national population
California Total	84,678 sites	45,387,938.[1]	720,180[1,2] (7226 MW)		

(1)Without production estimates from Food Processing industries = conservative estimate of total potential market
(2) Methane has an energy value of 1000 BTU/SCF; 3413 BTU/Kw-hr; 30% electric conversion efficiency is assumed
*Cumulative Biomass produced from Slaughter houses, Stockyards and Canneries etc. that are not discharged to Municipal sewers and contributing to Municipal biosolids capture shown under Municipal: Wastewater Treatment
** The minimum addressable power output is probably between 300-600 MW_e see estimates given below:

Appendix 1

Estimate Calculations as follows:

(1) Estimates for California <u>Wastewater</u> plants: 1,094,889 dry tons disposed after treatment of all types in 236 STP plants receiving a sum total flow of 5480 mgd. Calculate how many are solids are produced from these plants. Assume the national average of 1 ton of dry solids collected/each million gallons treated and all is economically recoverable.

Assume: 85% of total solids is volatile = 0.85 dry tons of volatile solids /million gallons throughput.

5480 mgd*365* .85 = 1,700,170 tons volatile solids /year

Check this answer by calculating the volatile solids reduction that should be about 30-35% for sludge digestion
1,700,170 tons/year - 1,094,889 tons /year / 1,700,170 tons/year = 0.35 = 35% volatile solids reduction. (correct)

(2) Estimates for California RDF/MSW – 243 Landfills from Inventory of Methane Emissions (California)

20.639 Terragrams/year MSW/ 454 gm/#*2000 #/ton) =22,730,176 tons MSW/year x 0.15 RDF = 3,429,488 tons/yr
1.13 Terragrams of Methane/year x 22.4/(16*28.316) = 5.6 x 10^10 SCF methane/year

(3) Estimates for California Agriculture Livestock Waste Management: Inventory is 2.0 million full grown beef and milk cows, 258,000 hogs and pigs, 859,000 sheep and lambs, 33 million chickens and 75 % of the solids are volatile and 35% VS reduction with conventional digestion. Assume 16,000 cubic feet methane/ton dry volatile solids converted or 8 cubic feet methane/# VS reduced. 16,000 cubic feet methane/ton dry volatile solids converted or 8 cubic feet methane/# VS reduced.

For 20,000 California farms:
2.0 x 10^6 *(100#/day) + 258,000 *(10#/day) + 859,000 * (20#/day + 33 x 10^6 (1 #/day) = 237 million # day
237 million #/day * 365 days year * .75/ 2000 #/ton = 32.43 x 10^6 tons manure/year = 5.12 x 10^11 SCF methane/year = 1.4 x10^13 liters methane/year = 10 Terragrams of methane/year

Calculation check per P. Lusk:
For California cow manure with 50% recoverable from field & Barn: 0.14 Terragrams (trillion grams) of methane/year (980 farms per P. Lusk) = 1.96 x 10^11 liters methane/year = 6.9 x 10^9 cubic feet methane produced by manure from 980 farms.

1.96 x 10^11 liters CH4/year/(0.35*0.5) x 1 gram VS/1 liter methane x #/454 grams x ton/2000 # = 1.23 x10^6 tons dry VS /year

1.23 x10^6 tons dry VS /year /980 farms = 1259 tons/average California farm.

Appendix 1

For all of California: 1259 tons/average farm x 20,000 Cal farms = 26 x 10^6 tons/year which is < 32 x10^6 tons/year calculated above.

Methane Production potential from 20,000 California manure producing farms (use highest value): methane /ton = 5.12 x 10^11 SCF methane/year

(4) Estimates for California Agriculture Crop Residuals: Assume 1 ton/acre residuals average for all residuals

7.7 million acres under production (excluding orchards) x 1 ton of residual/acre-year = 7.7 million tons/year
7.7 million tons/year * 16,000 SCF/ton = 1.23200 x 10^{11} SCF methane/year

(5) California Pulp and Paper Mill Residuals:
Only 15 mills of the 37 active mills do not discharge to the sewer. Assume 6.1% waste products generated for every ton of paper product output and an operation of 355 days/year.

5508 tons product/day *355 days/year (0.061 tons/ton product) = 119,280 tons/year pulping and recycling rejects

(6) Estimates for California Food Processing Industry(Canneries, slaughter houses, Stockyards, bakeries, etc.): There are no reliable figures currently available that define the plant discharges or production levels. It assumed that this market sector is approximately the same size as California wastewater plants (1 above).

B. Estimate of Total Addressable Market Heat Value:
Conversion to therms = 100,000 Btu

65% of Waste treatment plants (156 plants units) = 0.17 x 10^9 Therms
20% of the Agriculture Market (8100 plants units) = 1.27 x 10^9 Therms

Total = 1.44 Billion therms is an estimate of the addressable thermal market.
By comparison: Total potential market is all 45 million tons is converted to heat energy is 7.2 billion Therms = 7226 MW_e

C. Estimate of Benefit Cost Ratios:
This analysis assumes that all addressable biomass processed has economic (heat and electric) characteristics similar to the 15 ton/day TAP plant example economic analysis described above. The Benefit/Cost ratio is defined as B/C = present worth of benefits/present worth of costs. This analysis assumes an amortization period (life cycle) of 20 years and a high discount rate of 10% to define the minimum benefit for California. The comparison benefit/cost data are:

Public Benefit:
(1) Yearly Tangible Benefits:
Landfill Construction avoided ($200./dry ton) = 6,588,000 tons/yr x $200/ton = $1317 M/yr

*assumes that all field burning has been outlawed, 65% of Wastewater treatment plant residuals (35% VS red.) and landfilling is the only economic disposal alternative.
Biomass to Energy Employment (6.6 jobs/installed Mw_e) = 6.6 x 600 Mw_e = 3960 jobs
3960 jobs x $35,000/year-job (avg.) = $139M/year
Stream and groundwater cleanup Costs avoided (est.) = $ 1M/year
CO_2 costs avoided = ($30/ton) = (6,588,000 scf x .65 Methane x 116.38 #/1000 scf + 6,588,000 scf x 0.35 CO_2 x 122.5 #/1000 scf)/yr x $30/ton x ton/2000 # = $11,712/yr
Energy Savings (fossil fuel avoided 6 cents/kw-hr) = 911.2 kwh/ton x 6,588,000 tons x $.06/kwh = $ 360M/yr

(2) Public Investment Needed: for TAP scale-up prototype located at either a Pulp and Paper mill or large Farm ; (DOE + CEC) = $171K + $600K (CEC to be requested) + $600K (DOE set aside) = $ 1371K; CEC portion of startup cost = $71K + $600K = $671K

(3) California Public Benefit/Cost Calculation accrued over 20 years and discount rate is 10%:

Public B/C = $ 1,817M/yr x 20 yr / (6.71 x $ 671K) = $ 5,415M/$ 671K = 8,070/1

Private Customer Benefit = Industry Incentive:
TAP Annual Revenue, R = $148.43/ton processed x 6,588,000 tons/yr = $ 977.85M/yr
TAP Annual O&M Cost, K= $12.91/ton processed x 6,588,000 tons/yr = $ 85.05M/yr
TAP Total Capital Cost, C = $602/(ton/year) x 6,588,000 tons/yr = $3965.976M

Total Customer B/C = ($977.85M – $85.05M)/yr x 20 yr / $3965.97M = 4.5/1

Private licensed distributor Benefit:
Total Sales Cost (75% of total Capital Cost ; 0.75 x $ 3965.97M) = $ 2974M
Assumed license Cost = ($250 K + 3 % of total sales) = $0.25M x 42 licenses + ($2974M x 0.03) = $ 100M
Total Design Engineering Revenues (20% of Fabrication Costs) R = 0.2 (2974M) = $595M

Total Licensee B/C = $595M/ (6.71)/ ($10.5M + 89.22M/(6.71)) = $88.67M/ $23.79M = 3.7/1

Yearly TMC Benefit:
Assumed licensing income over 20 years = ($250 K + 3 % of sales)/license x 42 = $ 100M
Additional income from consulting and other services are ignored
Allocated California TMC Startup Capital = $ 5M (Rep. stockholder equity + assets – expenses)

TMC B/C = $ 100M/(6.71 x $5M) = 3/1

Appendix 1