Demystifying the Electric Grid

Dr. Alexandra von Meier
Research Coordinator, CIEE
Professor, Sonoma State University
vonmeier@uc-ciee.org

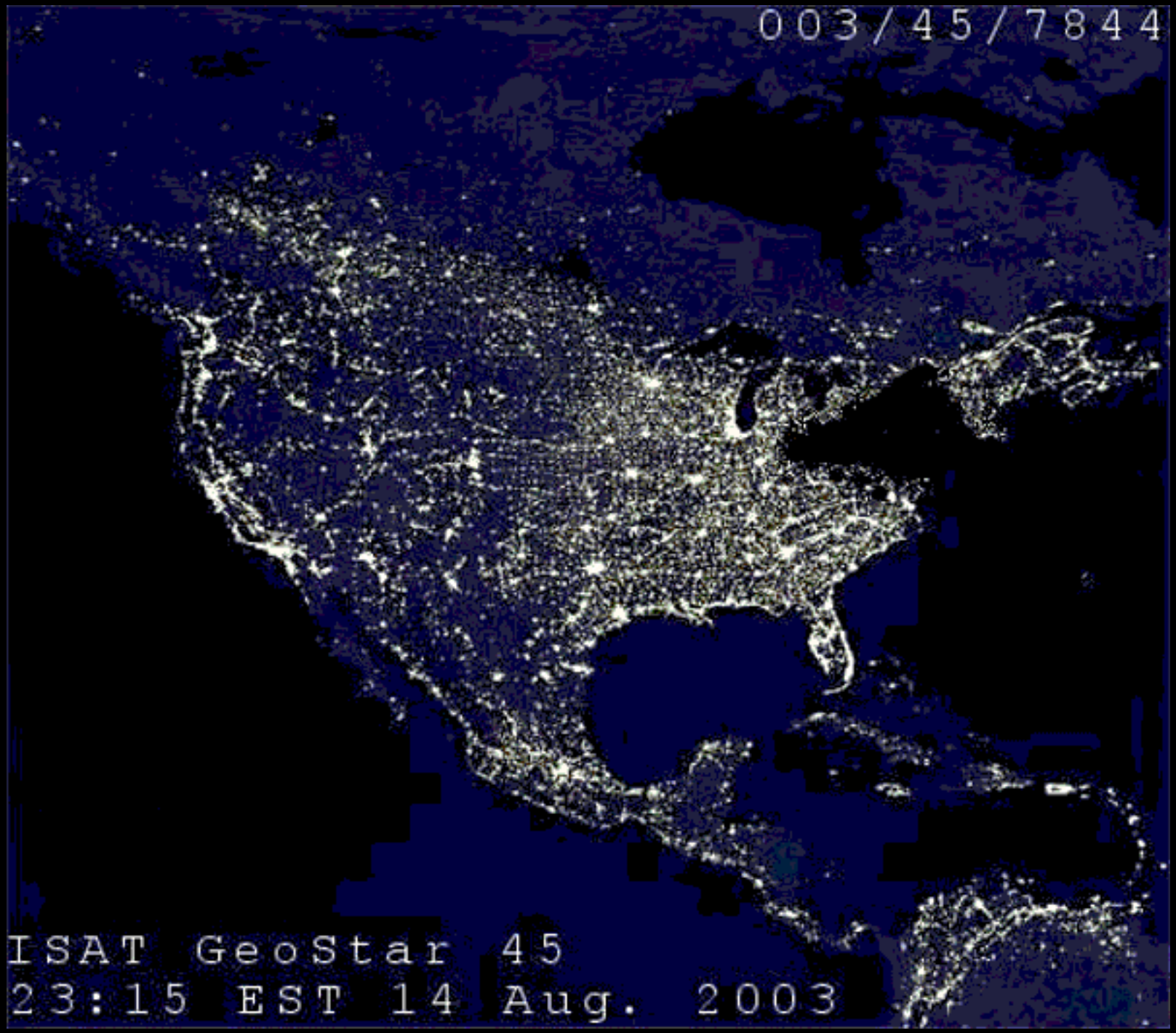
003/45/7844
ISAT GeoStar 45
23:15 EST 14 Aug. 2003

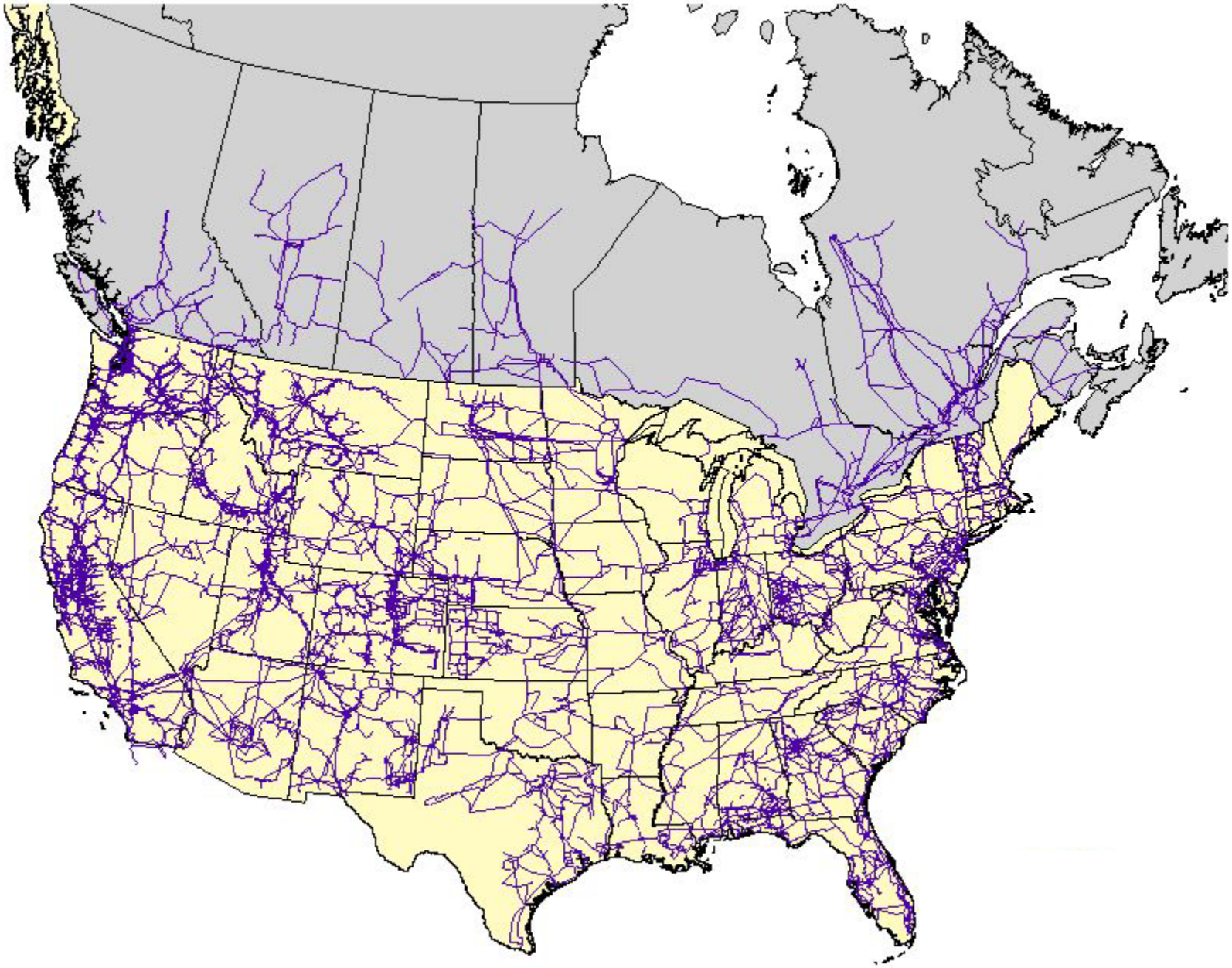

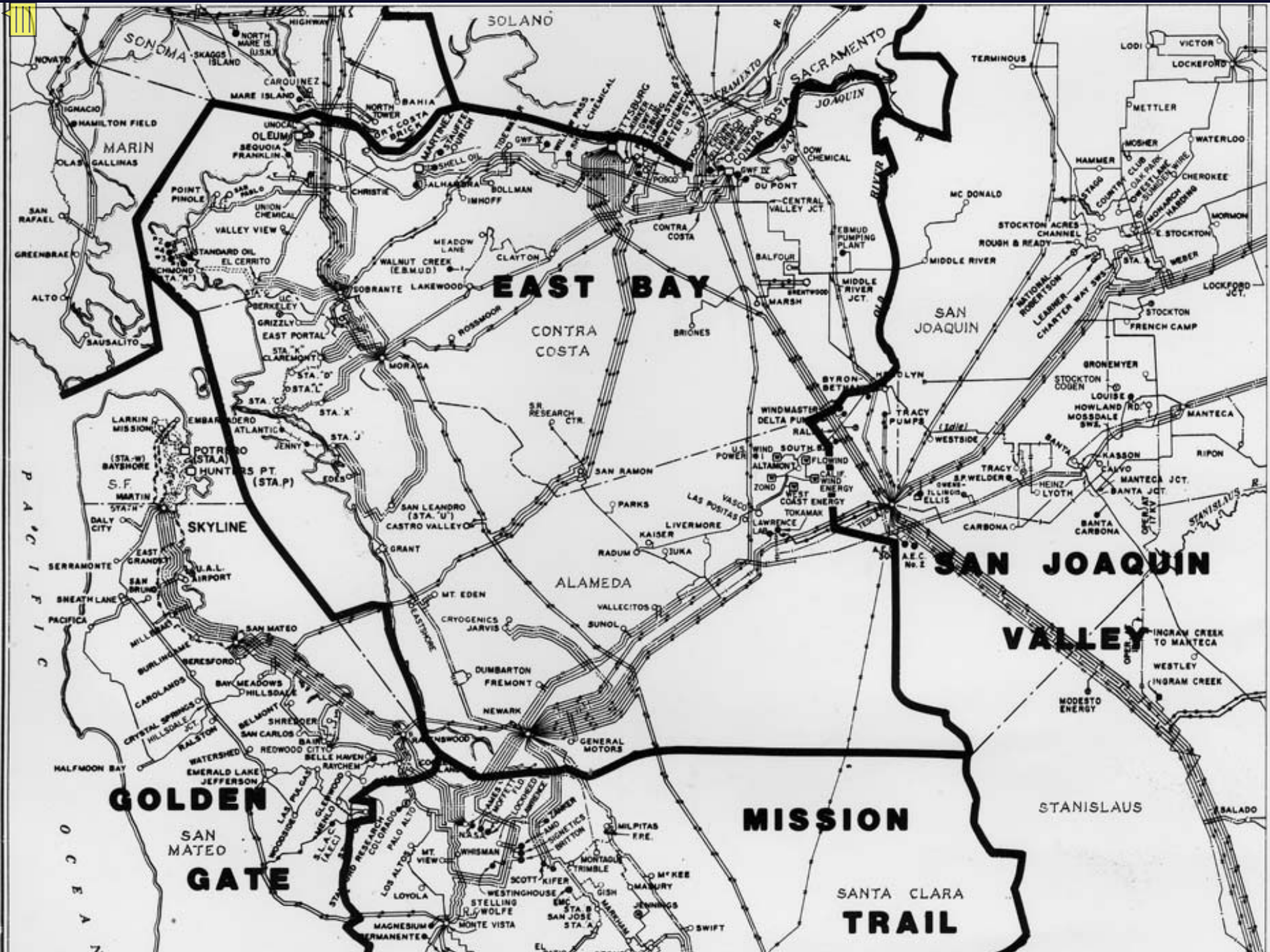

SOLANO
SONOMA
MARIN
EAST BAY
CONTRA COSTA
SAN JOAQUIN
SAN JOAQUIN VALLEY
ALAMEDA
SKYLINE
GOLDEN GATE
SAN MATEO
MISSION TRAIL
SANTA CLARA
STANISLAUS
PACIFIC OCEAN
SACRAMENTO
SAN JOAQUIN RIVER
OLD RIVER
NOVATO
IGNACIO
HAMILTON FIELD
LAS GALLINAS
SAN RAFAEL
GREENBRAE
ALTO
SAUSALITO
CARQUINEZ
MARE ISLAND
BAHIA
OLEUM
SEQUOIA
FRANKLIN
POINT PINOLE
UNION CHEMICAL
VALLEY VIEW
STANDARD OIL
EL CERRITO
CHRISTIE
ALHAMBRA
BOLLMAN
IMHOFF
MEADOW LANE
WALNUT CREEK (E.B.M.U.D.)
CLAYTON
SOBRANTE
LAKEWOOD
ROSSMOOR
MORAGA
GRIZZLY
EAST PORTAL
CLAREMONT
STA. "D"
STA. "L"
STA. "C"
STA. "X"
STA. "J"
JENNY
EDES
LARKIN
MISSION
EMBARCADERO
ATLANTIC
POTRERO (STA.A)
HUNTERS PT. (STA.P)
(STA.-W) BAYSHORE
S.F.
MARTIN
DALY CITY
SERRAMONTE
EAST GRANDE
U.A.L. AIRPORT
SAN BRUNO
SNEATH LANE
PACIFICA
MILLBRAE
BURLINGAME
SAN MATEO
BERESFORD
BAY MEADOWS
HILLSDALE
CAROLANDS
CRYSTAL SPRINGS
HILLSDALE JCT.
RALSTON
BELMONT
SHREDDER
SAN CARLOS
BAIR
REDWOOD CITY
BELLE HAVEN
RAYCHEM
WATERSHED
HALFMOON BAY
EMERALD LAKE
JEFFERSON
LAS PULGAS
WOODSIDE
GLENWOOD
MENLO
S.L.A.C. (A.E.C.)
STANFORD RESEARCH
COLORADO
PALO ALTO
LOS ALTOS
MT. VIEW
LOYOLA
MAGNESIUM
PERMANENTE
MONTE VISTA
STELLING
WOLFE
WHISMAN
SCOTT
KIFER
WESTINGHOUSE
EMC
STA. B
SAN JOSE
STA. A
MARKHAM
JENNINGS
SWIFT
MILPITAS
F.P.E.
MONTAGUE
TRIMBLE
GISH
McKEE
MASURY
SIGNETICS
BRITTON
ZANKER
AMES
MOFFETT FLD.
LOCKHEED
LAWRENCE
N.A.S.
RAVENSWOOD
GENERAL MOTORS
NEWARK
FREMONT
DUMBARTON
CRYOGENICS
JARVIS
MT. EDEN
EASTSHORE
GRANT
CASTRO VALLEY
SAN LEANDRO (STA. "U")
PARKS
SAN RAMON
S.R. RESEARCH CTR.
RADUM
KAISER
JUKA
LIVERMORE
VALLECITOS
SUNOL
LAS POSITAS
VASCO
LAWRENCE LAB.
TOKAMAK
WEST COAST ENERGY
ZOND
ALTAMONT
U.S. POWER
WIND
SOUTH
FLOWIND
CALIF. WIND ENERGY
WINDMASTER
DELTA PUMPS
RALEIGH
BYRON
BETHANY
HAROLYN
TRACY PUMPS
(Idle)
WESTSIDE
ELLIS
GWENS-ILLINOIS
TRACY
S.P. WELDER
HEINZ
LYOTH
CARBONA
BANTA CARBONA
BANTA
KASSON
CALVO
MANTECA JCT.
BANTA JCT.
MANTECA
RIPON
STOCKTON COGEN
GRONEMYER
LOUISE
HOWLAND RD.
MOSSDALE SWS.
STOCKTON
FRENCH CAMP
LOCKFORD JCT.
STOCKTON ACRES CHANNEL
ROUGH & READY
MIDDLE RIVER
MC DONALD
MIDDLE RIVER JCT.
BALFOUR
BRENTWOOD
MARSH
BRIONES
CONTRA COSTA
CENTRAL VALLEY JCT.
DU PONT
DOW CHEMICAL
POSCO
GWF IV
GWF V
GWF VI
GWF IX
CONTRA COSTA
SACRAMENTO
SAN JOAQUIN
TERMINOUS
LODI
VICTOR
LOCKEFORD
METTLER
MOSHER
WATERLOO
HAMMER
STAGG
COUNTRY CLUB
OAK PARK
WESTLAKE
SUMDEN
WIRE
CHEROKEE
MONARCH
HARDING
MORMON
E. STOCKTON
WEBER
NATIONAL ROBERTSON
LEARNER
CHARTER WAY SWS.
STA. A
STANISLAUS R.
INGRAM CREEK TO MANTECA
WESTLEY
INGRAM CREEK
MODESTO ENERGY
SALADO

Voltage:

How badly the electrons would rather be at the + than the - end

(Energy / Charge)

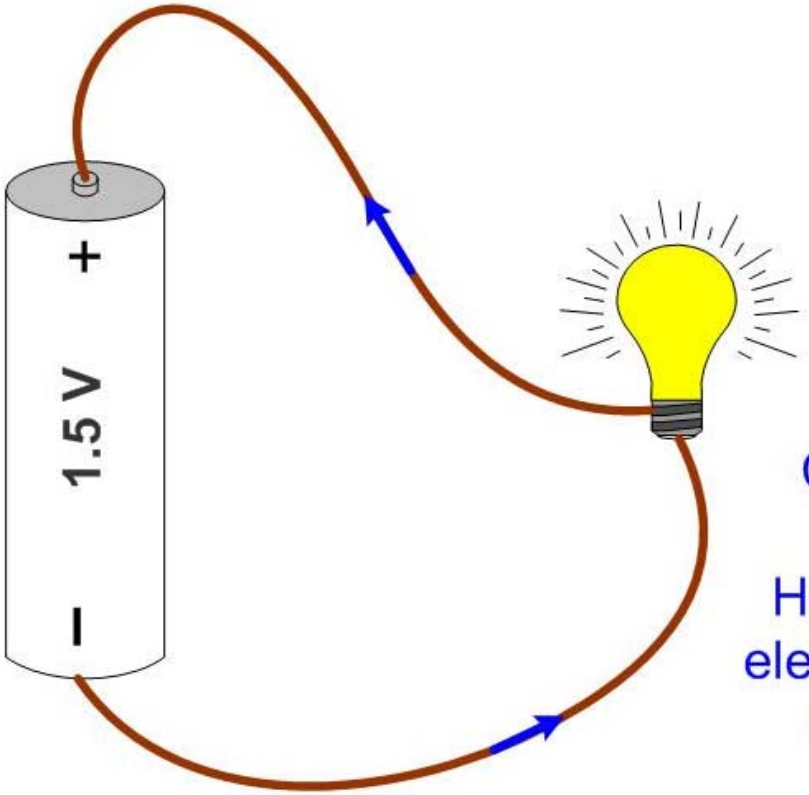

Current:

How many electrons are flowing

(Charge / Time)

Power: The rate at which the battery expends energy to move electrons, and the electrons expend energy to squeeze through the light bulb

Power = Voltage x Current (Energy / Time)

Inside an electric generator:

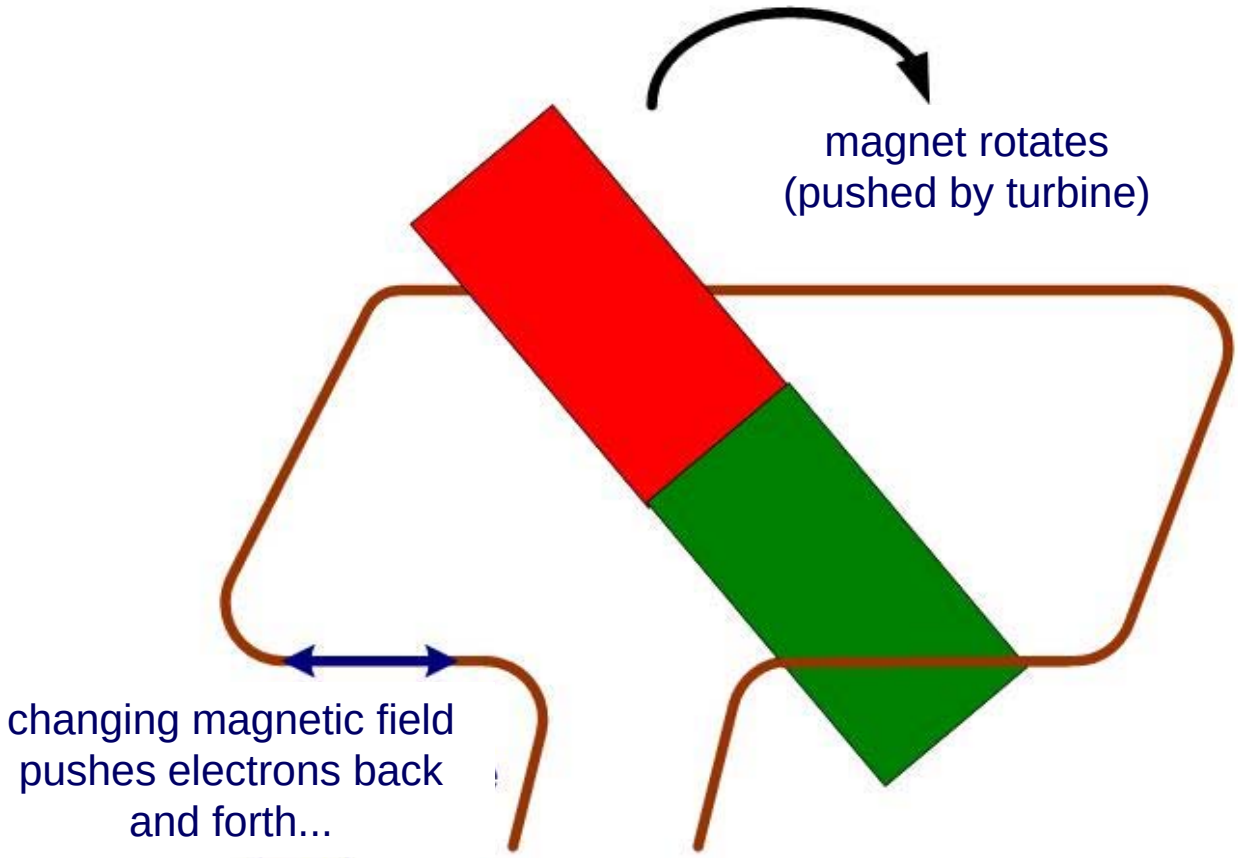

...creating an alternating voltage and
making alternating current (a.c.) flow
if a path is available (load is connected)

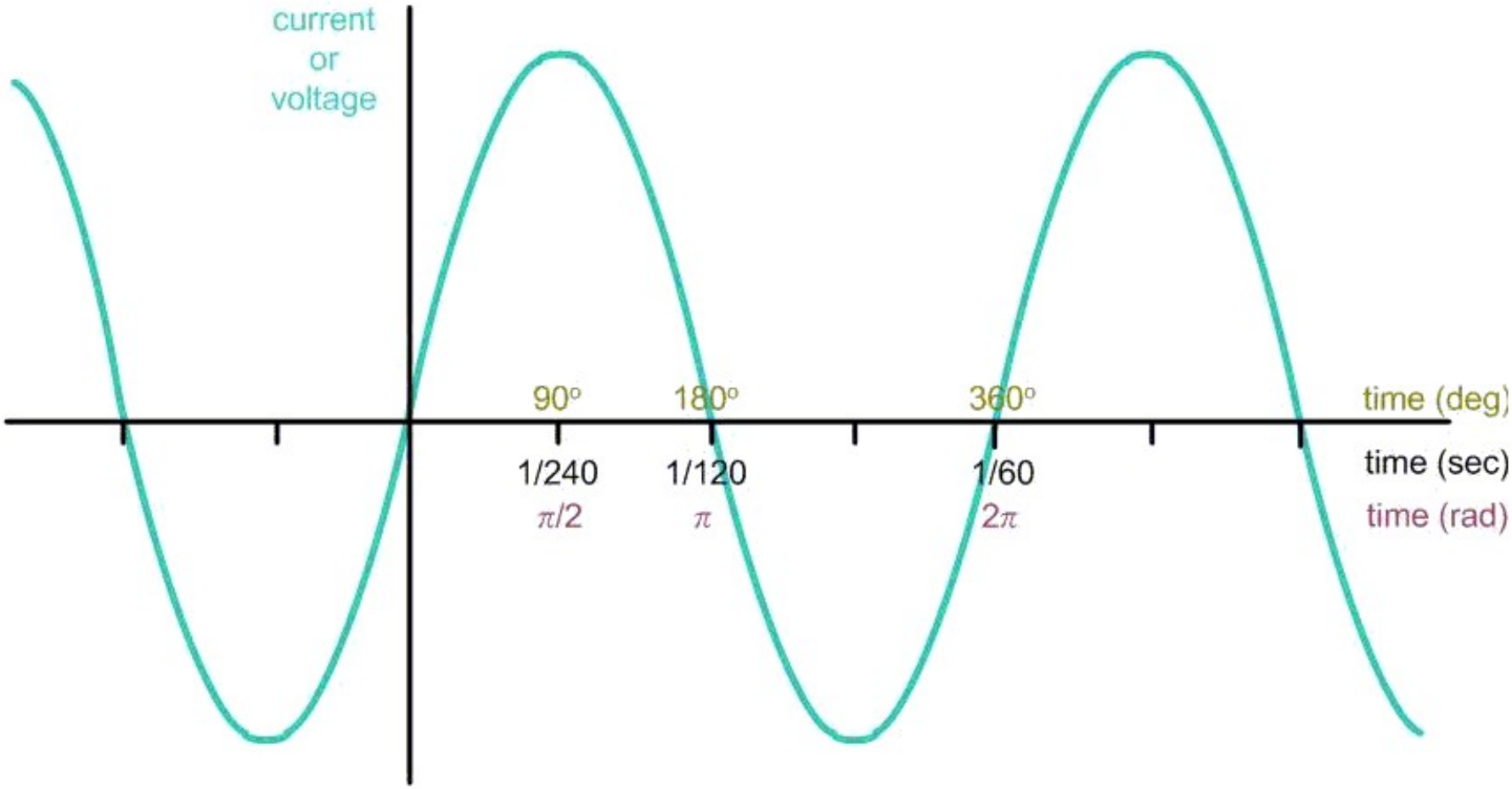

Alternating current (a.c.) with frequency 60 Hz:
one complete +/- reversal every 1/60th second

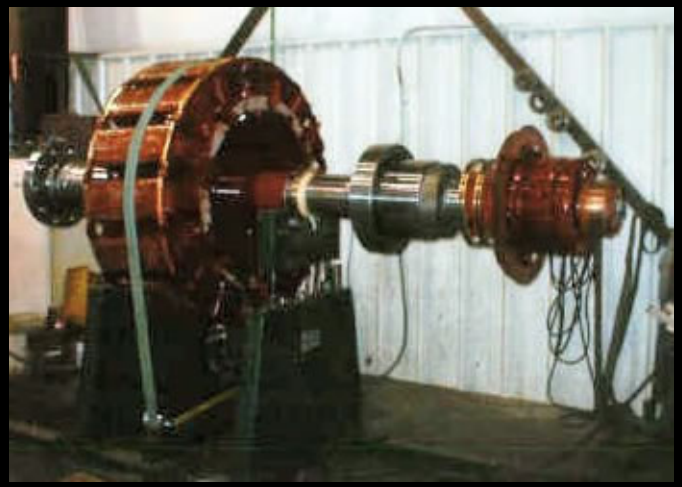

Batesville (LS Power)

Courtesy of Jim Zimmerlin

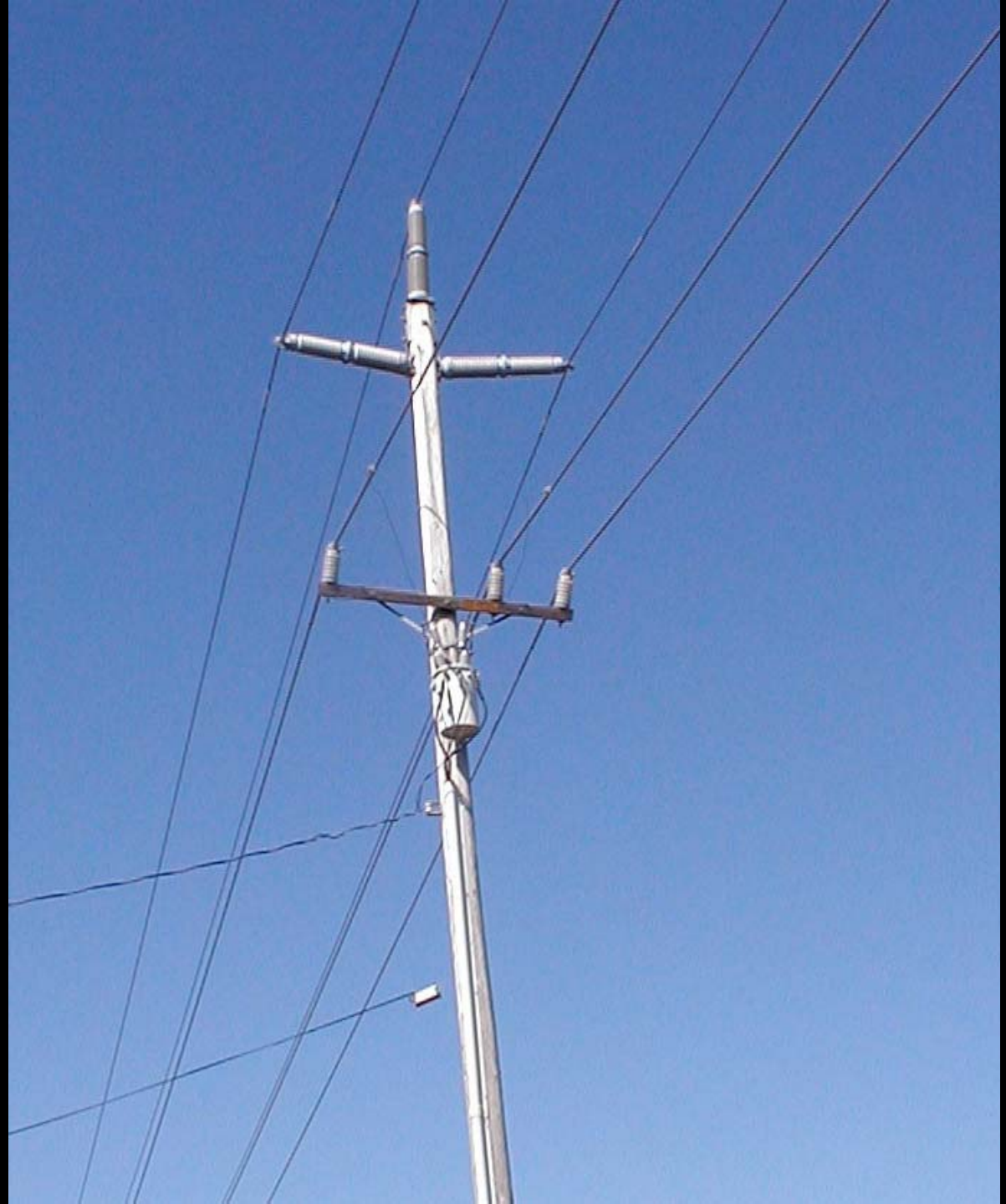

Power System Structure with typical voltage levels

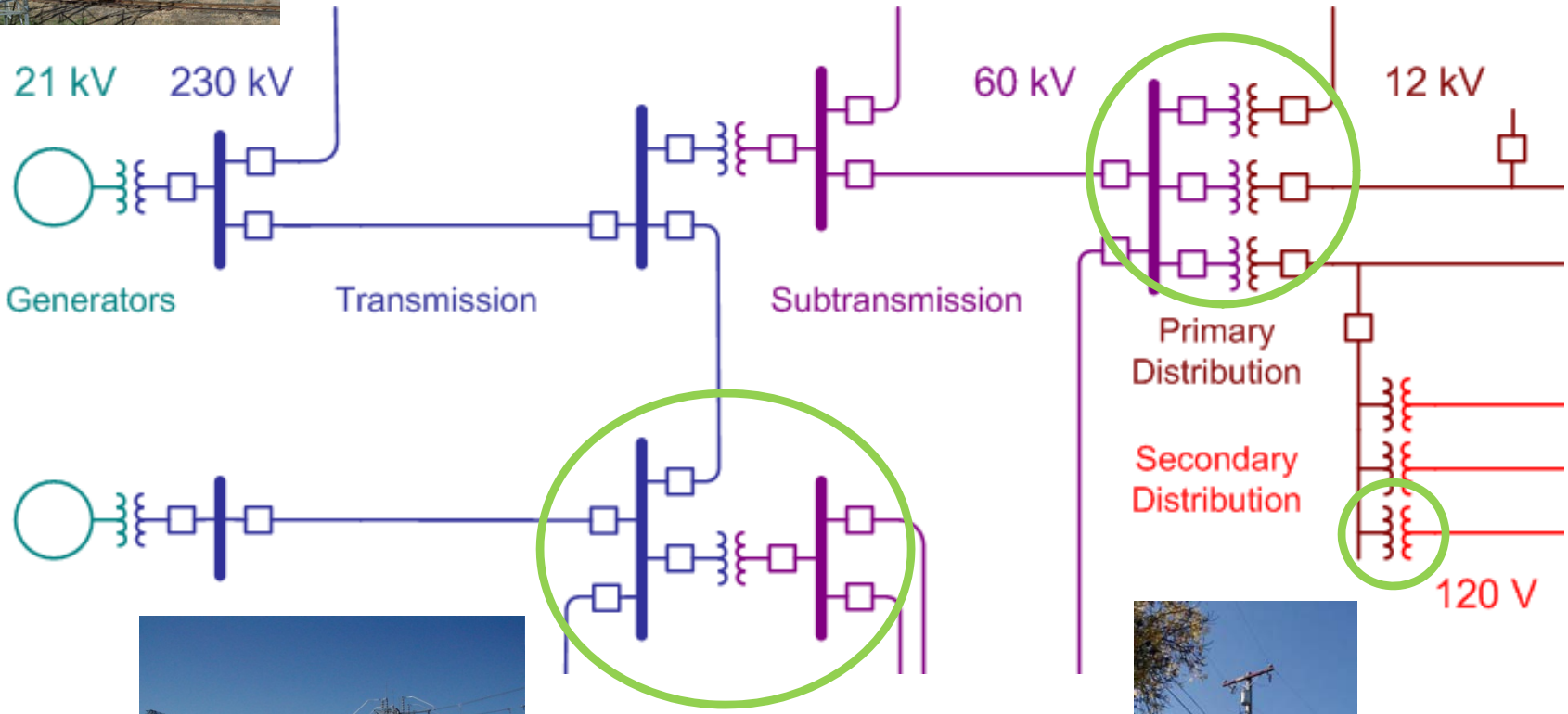

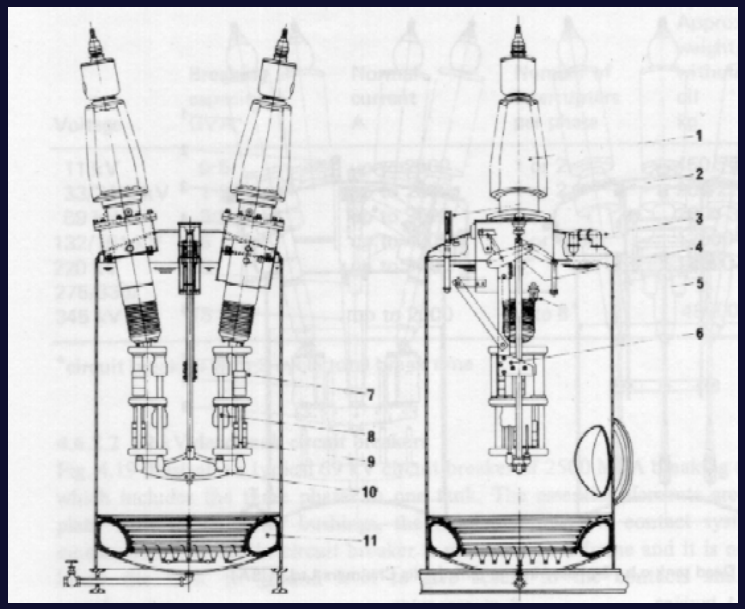

Oil circuit breakers

S&C Type XS Fuse Cutouts

Outdoor Distribution
(4.16 kV through 25 kV)

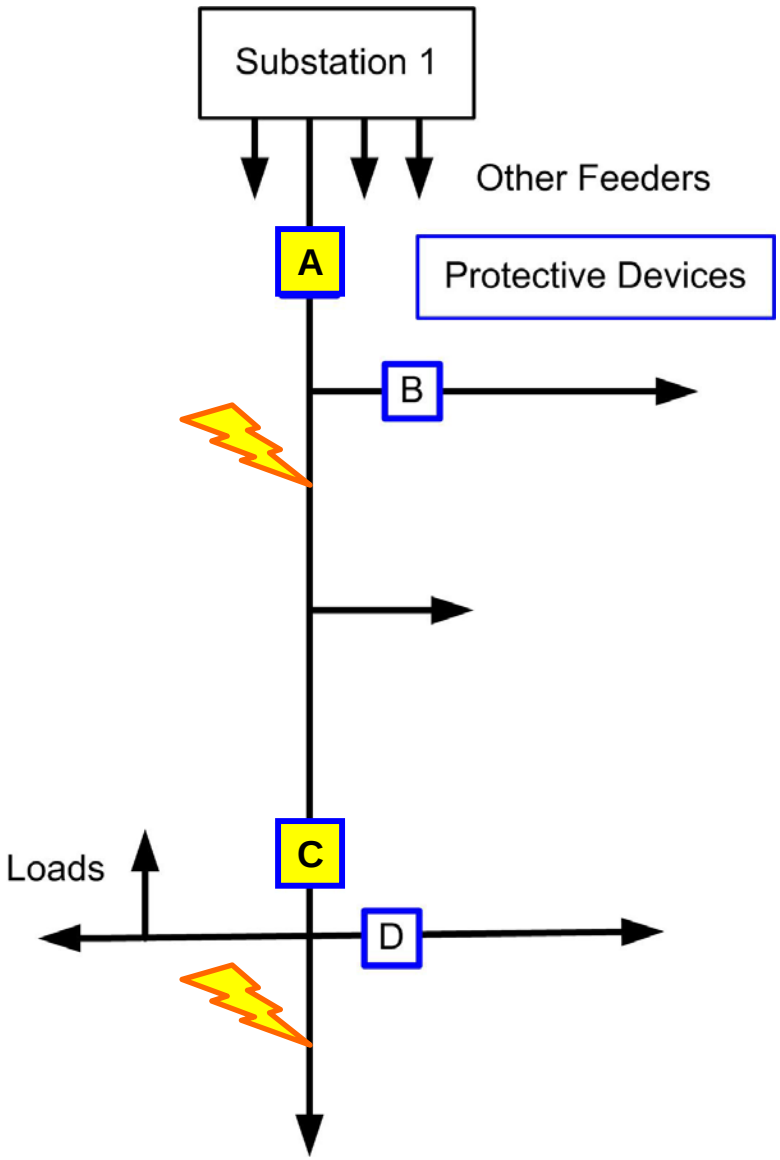
Substation 1
Other Feeders
A
Protective Devices
B
C
Loads
D

Typical Distribution System Layout
with radial topology & power flow

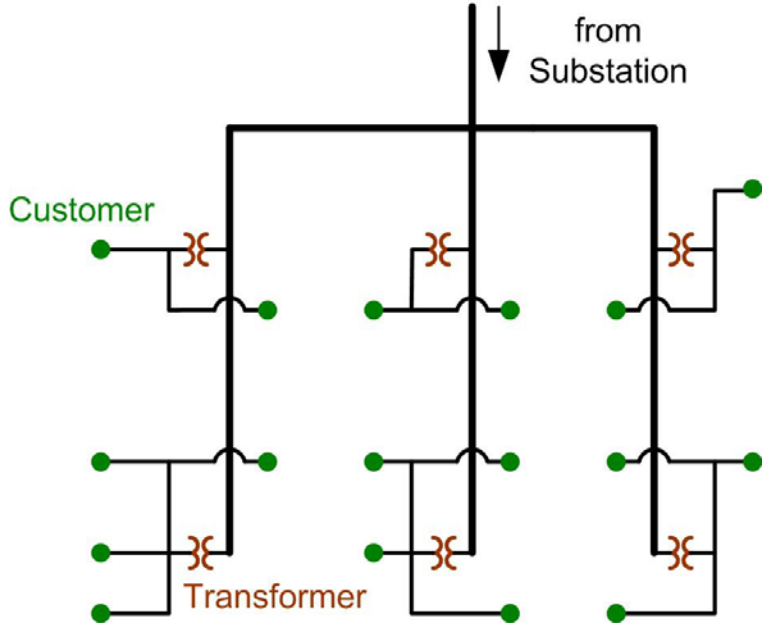

Radial Distribution System
with Distributed Generation

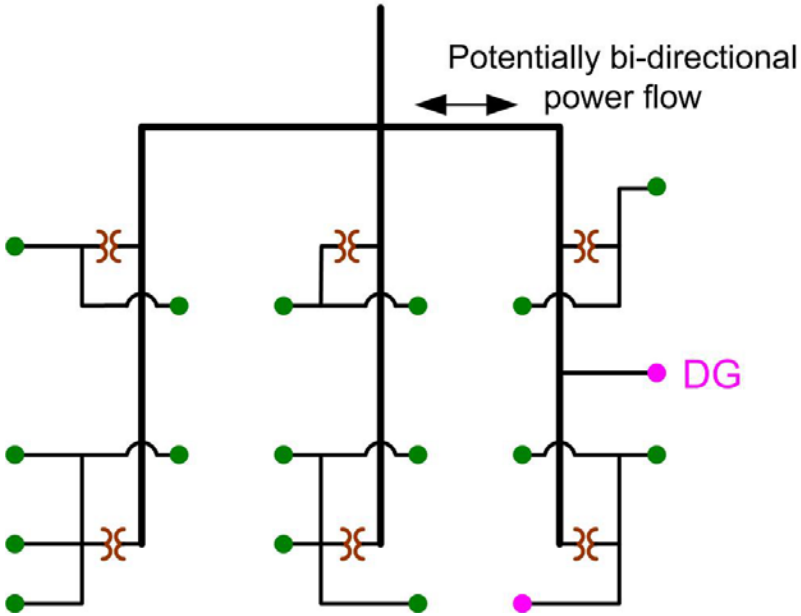

Network structure at transmission level

Radial structure at distribution level

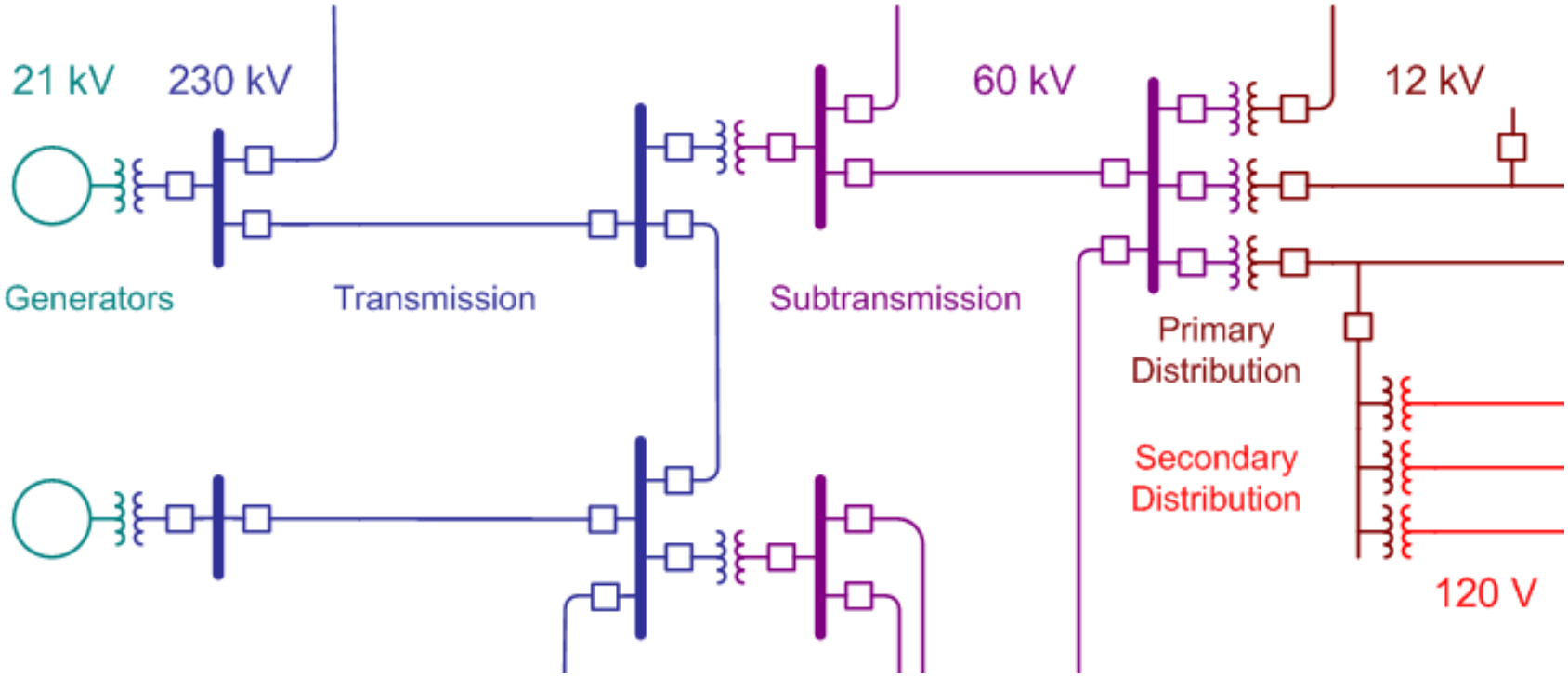

HIGH
AGE

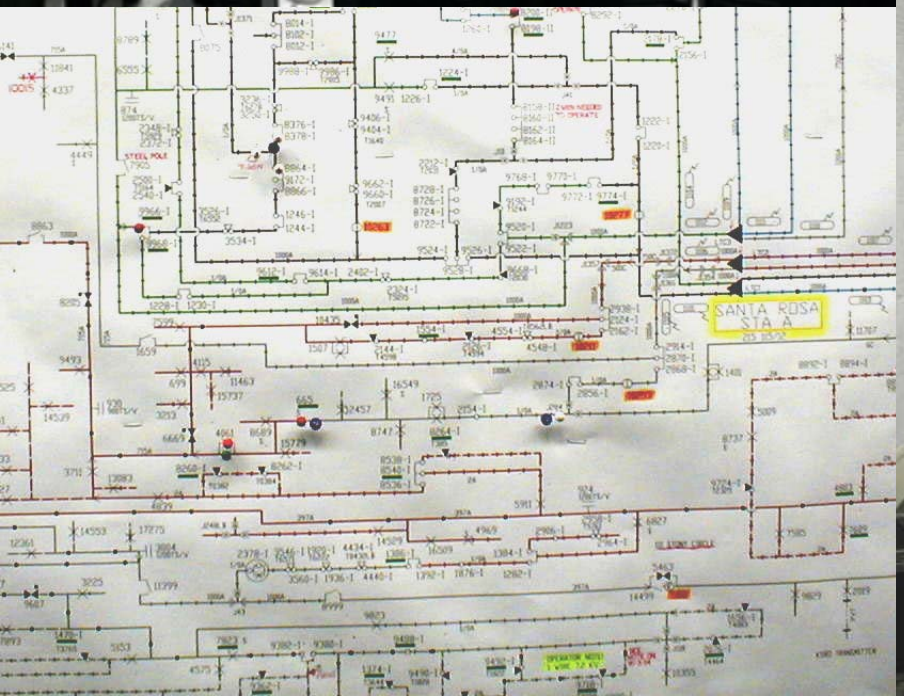
SANTA ROSA
STA A

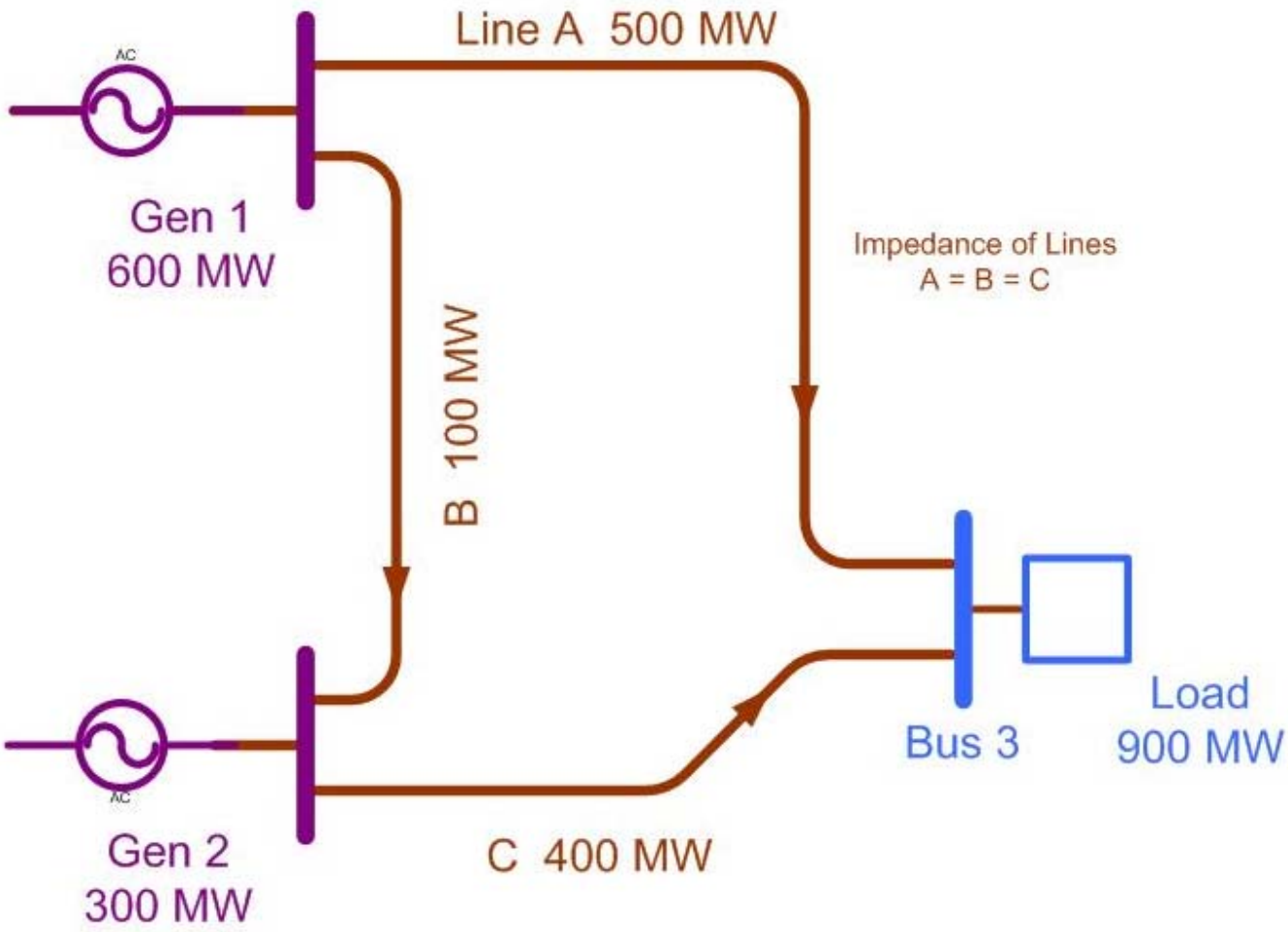

Power Flow Example

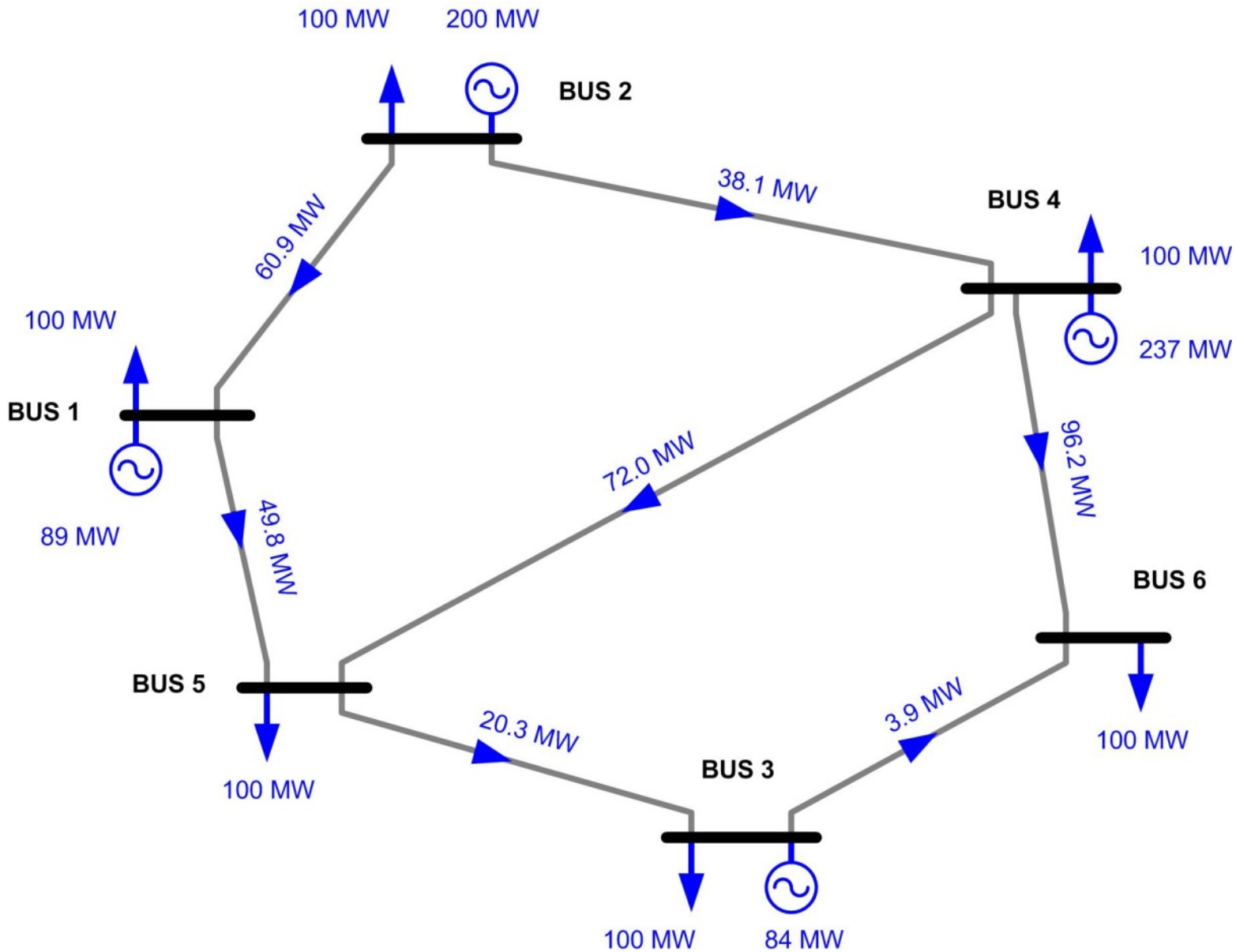
100 MW
200 MW
BUS 2
38.1 MW
BUS 4
100 MW
237 MW
60.9 MW
100 MW
BUS 1
89 MW
72.0 MW
96.2 MW
49.8 MW
BUS 6
BUS 5
100 MW
20.3 MW
3.9 MW
100 MW
BUS 3
100 MW
84 MW

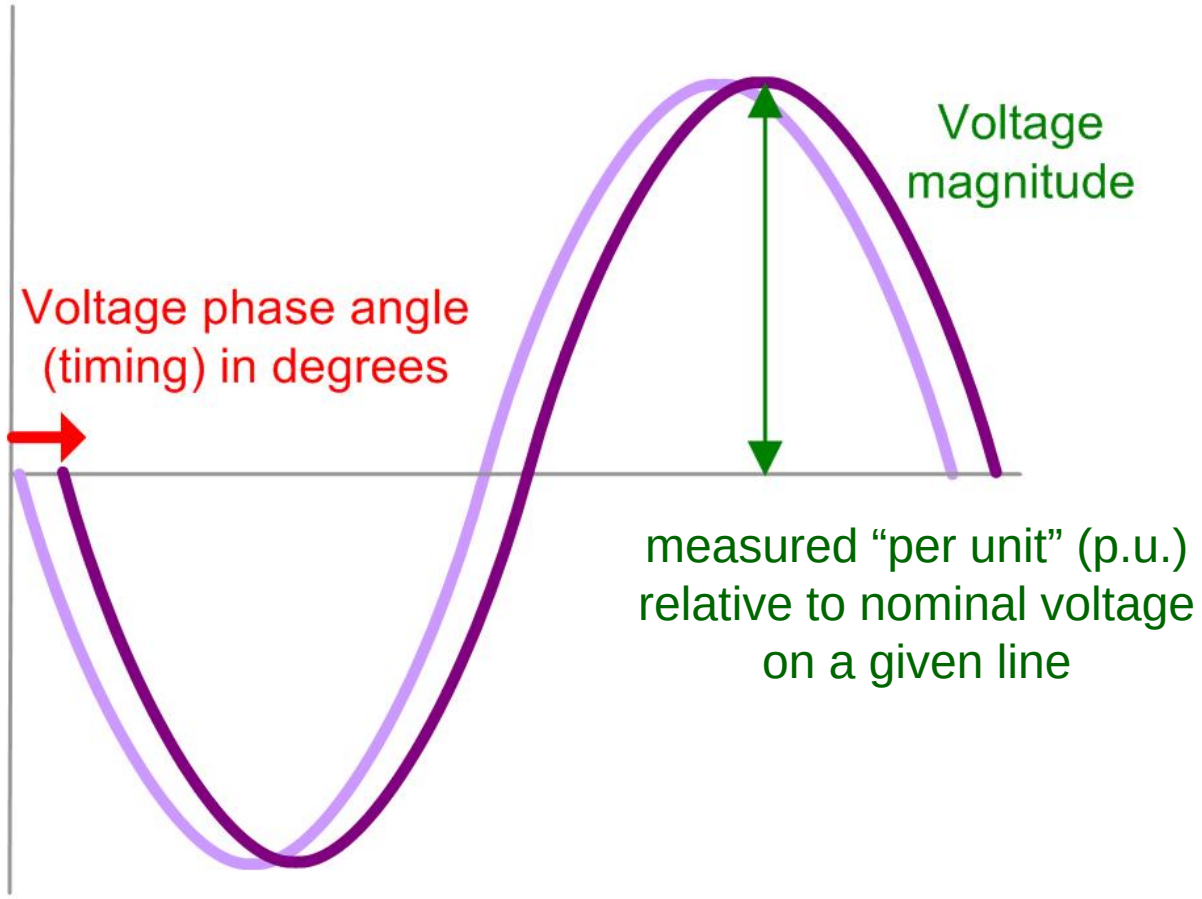

Voltages at same instant, different locations

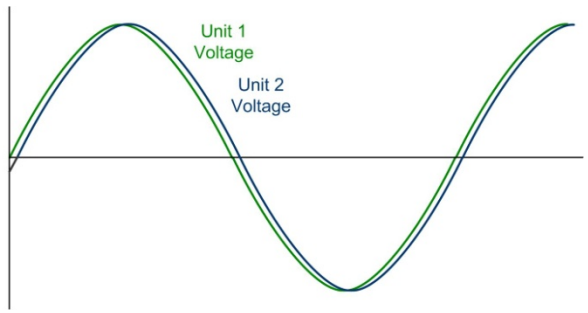
Unit 1
Voltage
Unit 2
Voltage

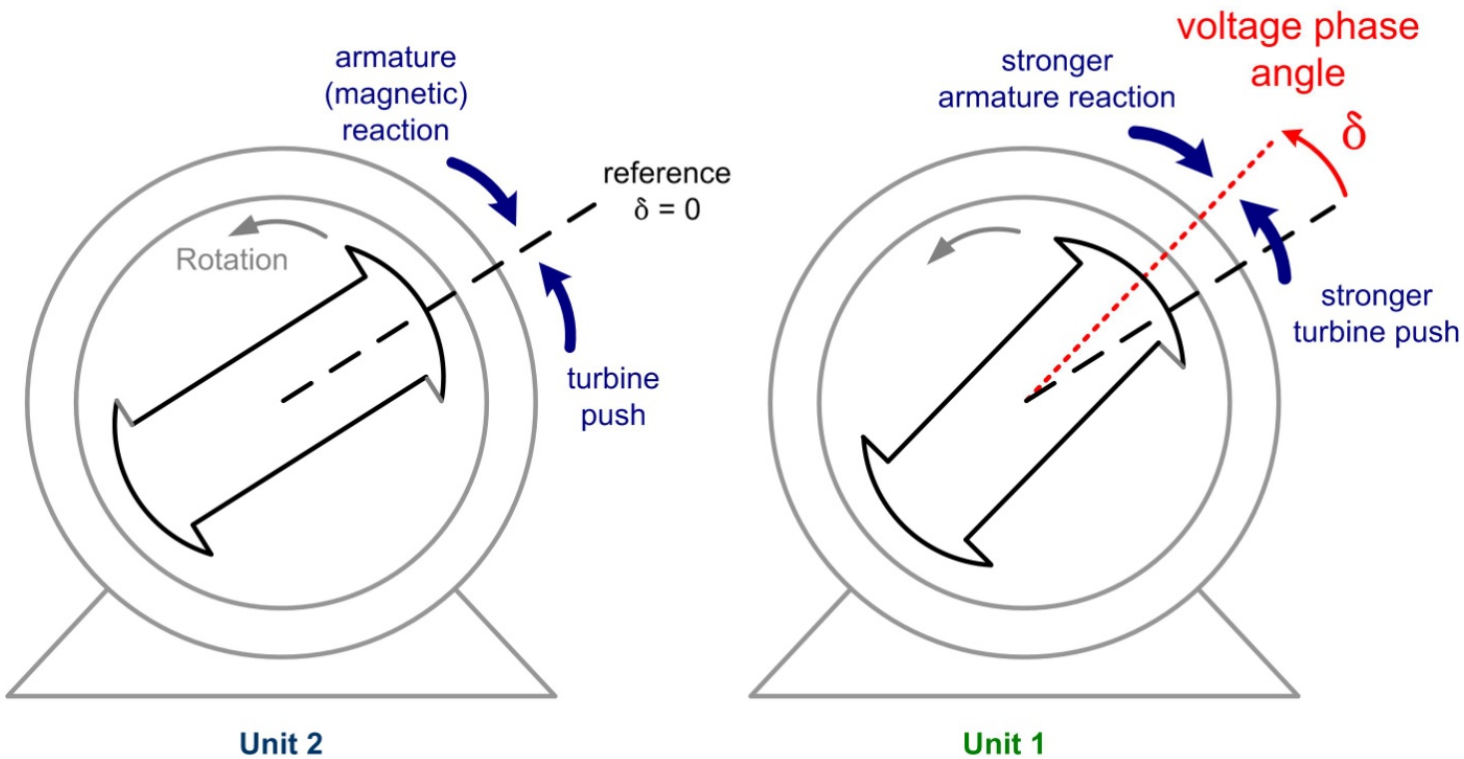
armature
(magnetic)
reaction
reference
δ = 0
Rotation
turbine
push
Unit 2
stronger
armature reaction
voltage phase
angle
δ
stronger
turbine push
Unit 1

FINAL REPORT - SYSTEM DISTURBANCE ON 4 NOVEMBER 2006

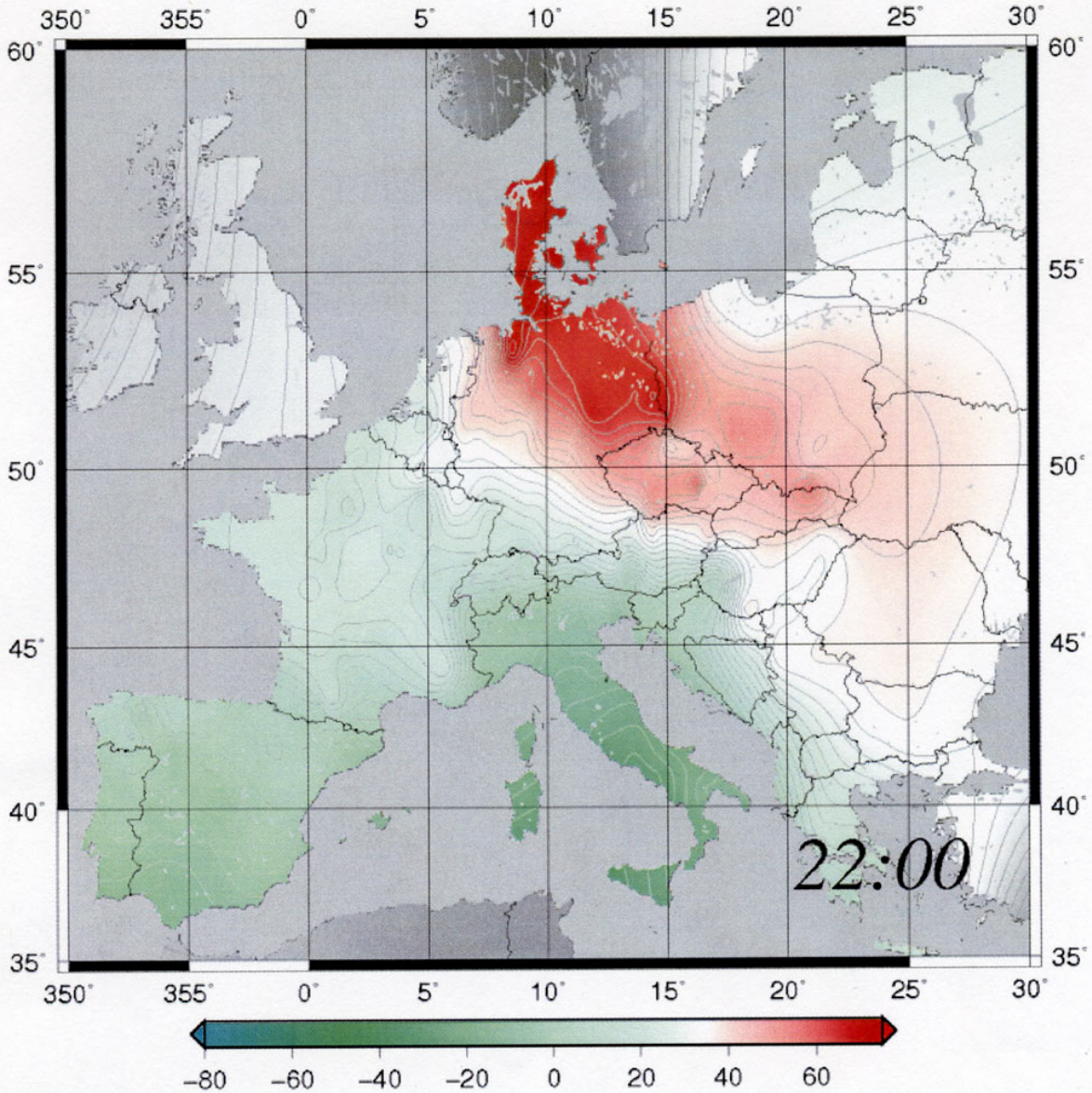

Fig. D1a: **Voltage phase angle differences in the UCTE system at 22:00 /ELES/**

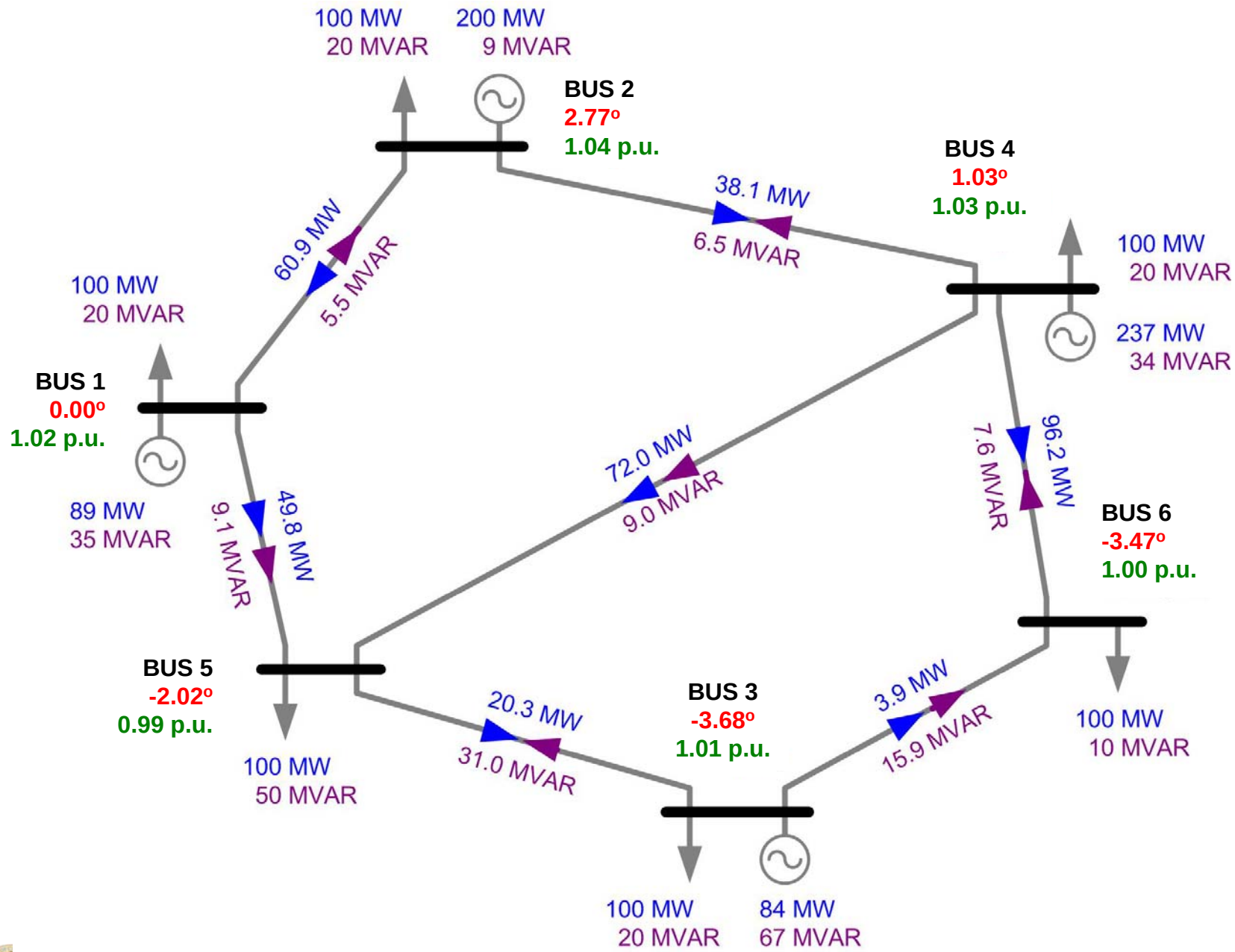
100 MW
20 MVAR
200 MW
9 MVAR
BUS 2
2.77º
1.04 p.u.
BUS 4
1.03º
1.03 p.u.
38.1 MW
6.5 MVAR
60.9 MW
5.5 MVAR
100 MW
20 MVAR
100 MW
20 MVAR
237 MW
34 MVAR
BUS 1
0.00º
1.02 p.u.
89 MW
35 MVAR
9.1 MVAR
49.8 MW
72.0 MW
9.0 MVAR
7.6 MVAR
96.2 MW
BUS 6
-3.47º
1.00 p.u.
BUS 5
-2.02º
0.99 p.u.
100 MW
50 MVAR
20.3 MW
31.0 MVAR
BUS 3
-3.68º
1.01 p.u.
3.9 MW
15.9 MVAR
100 MW
10 MVAR
100 MW
20 MVAR
84 MW
67 MVAR

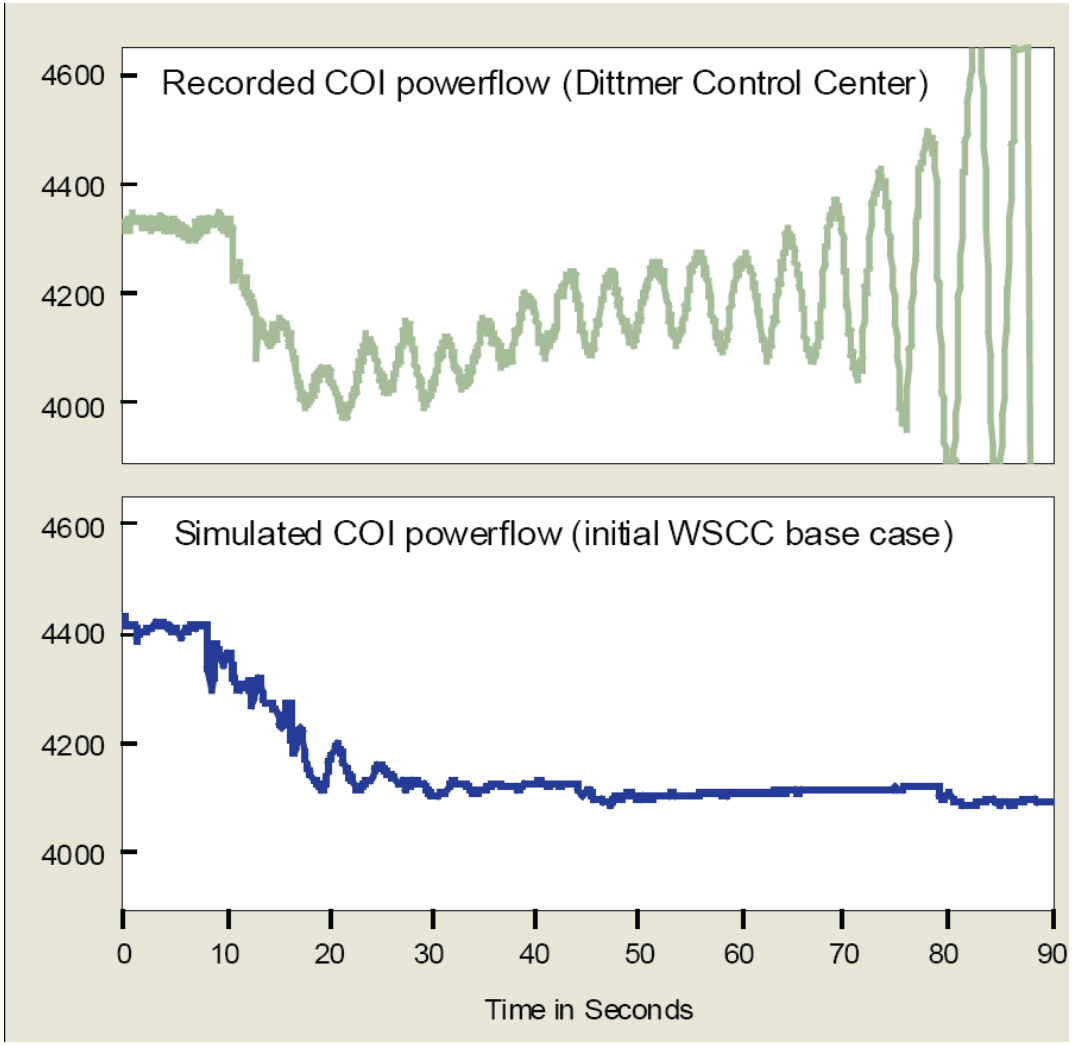

oscillations preceding the 1996 West Coast blackout

vs.

what models predicted

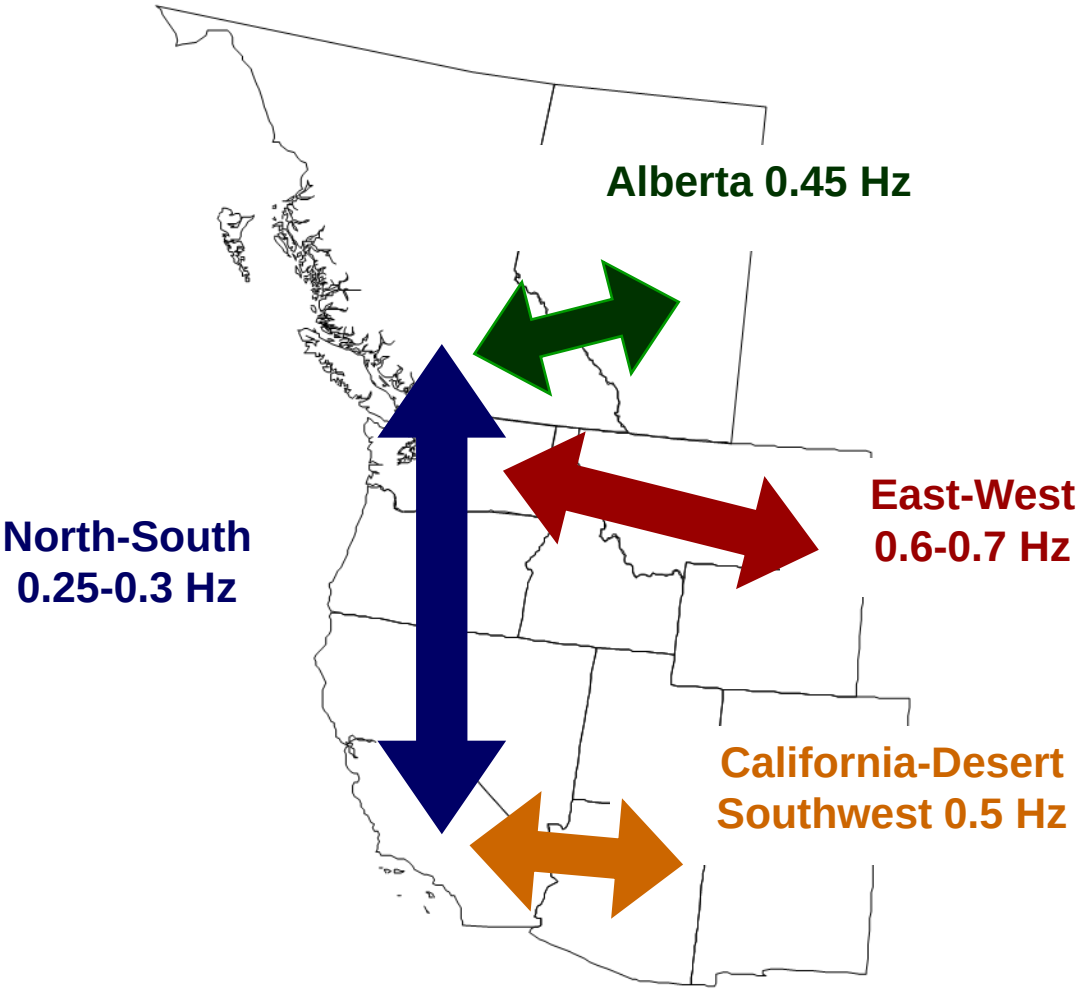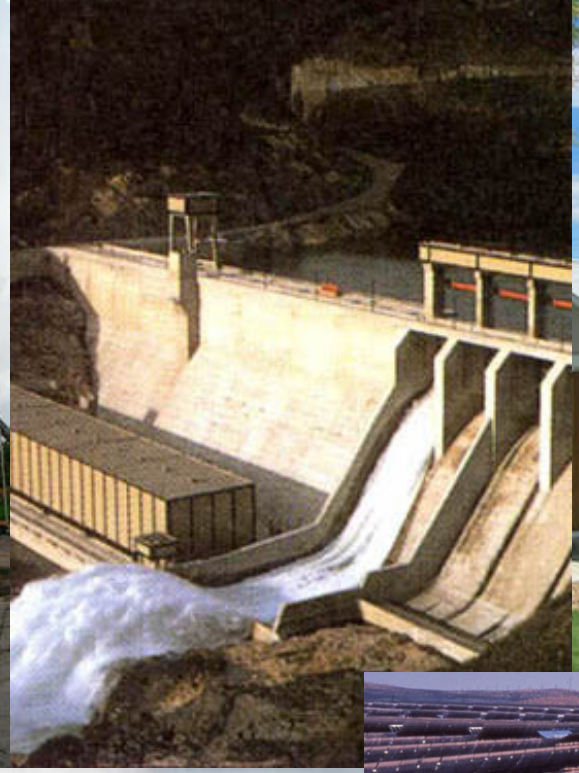
Alberta 0.45 Hz
North-South
0.25-0.3 Hz
East-West
0.6-0.7 Hz
California-Desert
Southwest 0.5 Hz