National Renewable Energy Laboratory
Innovation for Our Energy Future

CEC Wind Turbine Dynamic Modeling Project

Prepared by

Ed Muljadi
Principal Investigator
NREL

In cooperation with

J. Charles Smith
Executive Director
UWIG

NREL is a national laboratory of the U.S. Department of Energy Office of Energy Efficiency and Renewable Energy operated by the Alliance for Sustainable Energy, LLC

Outline

- Motivation for the Work
- Project Scope
- Project Results
- Significance of the Work
- Role of the PIER Program
- What Lies Ahead

Motivation

- Research undertaken to help maintain grid reliability under high renewables penetration
- Wind turbine dynamic behavior is different from conventional machines, needed to be studied
- Concern over dynamic behavior identified need for improved dynamic behavior
- Pressure applied by transmission system operators, NERC and FERC to put models into the public domain
- Pressure built to develop improved models
- Can’t do renewables without it!

Power Generation

Conventional vs Wind Power Plant

- Single or multiple large (100 MW) generators.
- Prime mover: steam, combustion engine – non-renewable fuel affected by fuel cost, politics, and pollution restrictions.
- Controllability: adjustable up to max limit and down to min limit.
- Predictability: preplanned generation based on load forecast, influenced by human operation based on optimum operation (scheduled operation).
- Located relatively close to the load center.
- Generator: synchronous generator
- Fixed speed – no slip: flux is controlled via exciter winding. Flux and rotor rotate synchronously.

- Many (hundreds) of wind turbines (1 MW – 5 MW each)
- Prime mover: wind (wind turbine) –renewable (free, natural, pollution free)
- Controllability: active power controls and curtailment
- Predictability: wind plant output based on wind forecasting, influenced more by nature (wind) than humans, based on maximizing energy production (unscheduled operation).
- Located at wind resource, it may be far from the load center.
- Generator: Four different types (fixed speed, variable slip, variable speed, full converter) – non synchronous generation
- Type 3 & 4: variable speed with flux oriented controller (FOC) via power converter. Rotor does not have to rotate synchronously.

Wind Dynamic Model

Types of Wind Turbine Generator

Four basic topologies based on grid interface:

- Type 1 – conventional induction generator
- Type 2 – wound-rotor induction generator with variable rotor resistance
- Type 3 – doubly-fed induction generator
- Type 4 – full converter interface

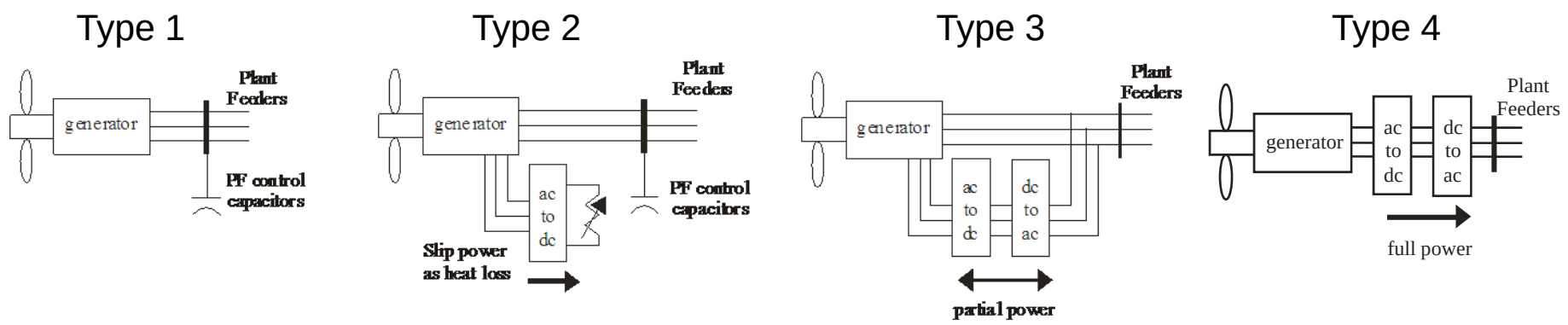

Project Scope

- Research, develop, and validate new wind turbine models

Major Tasks

- Wind Turbine Dynamic Model Development
- Wind Plant Equivalencing
- Model Validation
- Dynamic Model Guideline
- Public Dissemination

Accomplishments

- Generic WTG dynamic models (Type 1 – Type 4) on two different major power system software platforms (Siemens-PTI-PSSE and GE-PSLF).
- Detailed (high level) dynamic models of four different types of WTG in EMTDC/PSCAD with capability to analyze three phase unbalanced faults, short circuit current contribution, and electromechanical interaction.
- Equivalencing Wind Power Plant Methodology, validated by IREQ (Hydro-Quebec)
- WECC Power Flow Guide (2009) and WECC Dynamic Modeling Guide (being reviewed).
- Workshops/short-courses/seminars on wind turbine generator dynamic modeling at various events sponsored by the IEEE, WECC, UWIG, IEC, and various universities.
- Technical papers at the IEEE, Windpower, and other conferences on related topics: WPP equivalencing, fault analysis of a wind plant, WTG dynamic model validation methodology, power system stability, and short circuit behavior of WPP.

Validation Example

Example of Type 2 WTG

V and f

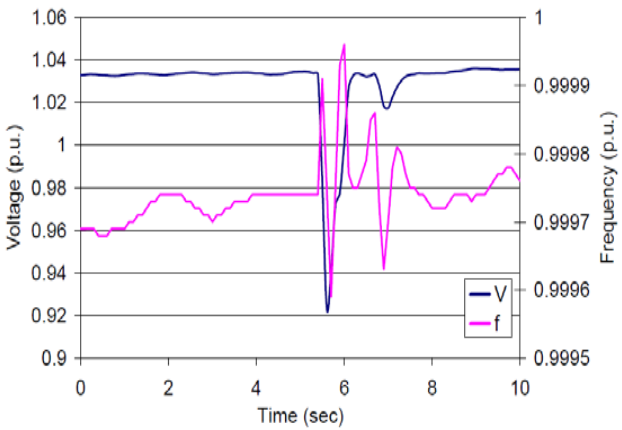

Real Power

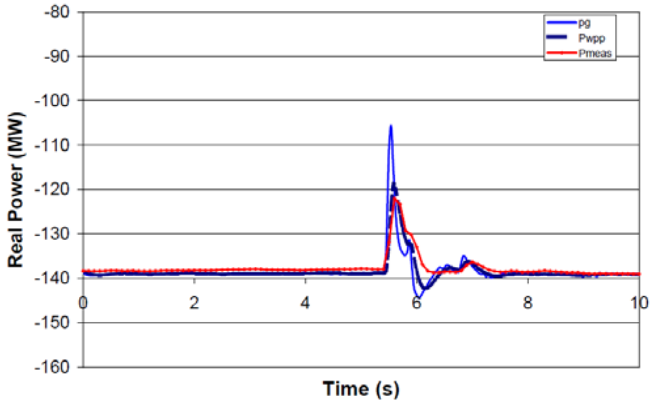

Reactive Power

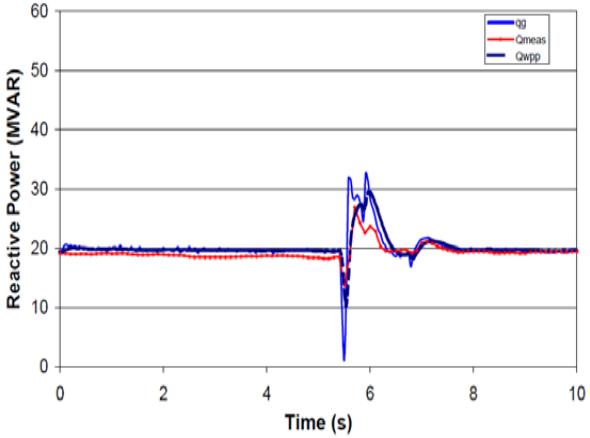

Example of Type 3 WTG

V and f

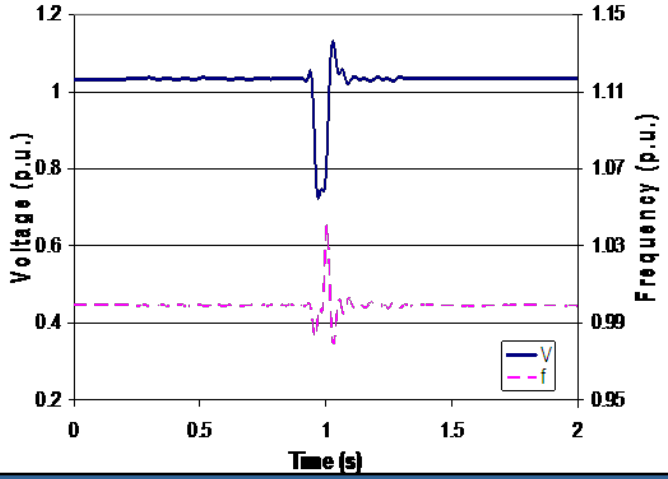

Real Power

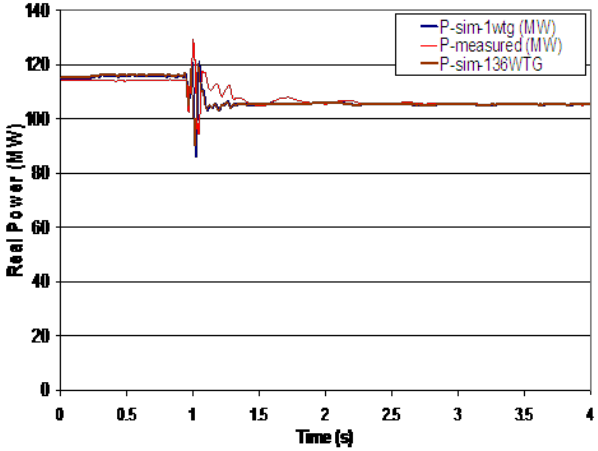

Reactive Power

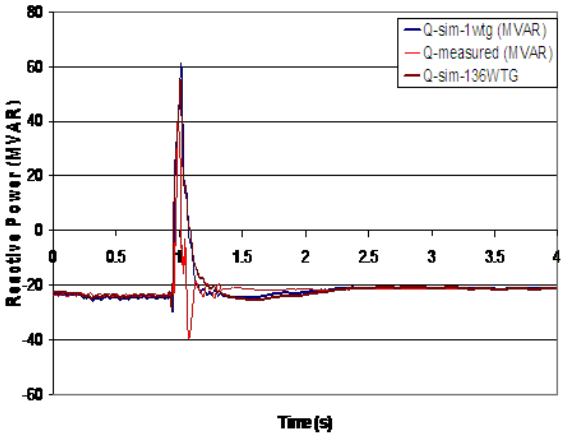

Wind Power Plant Equivalencing Method

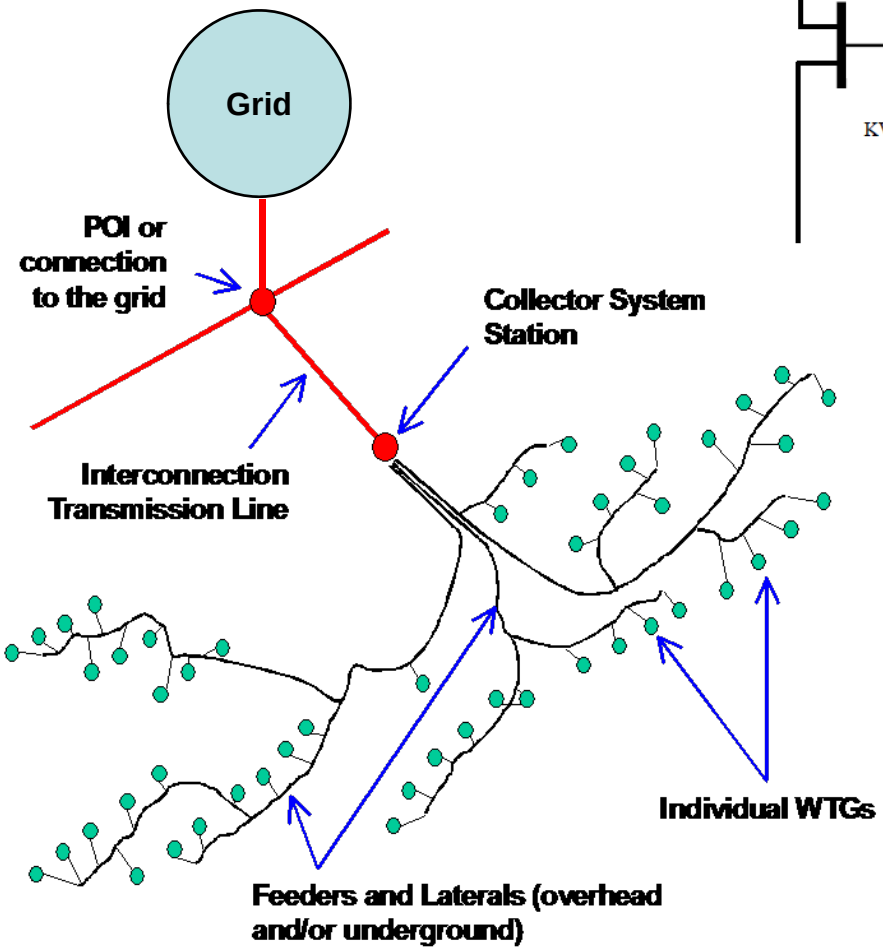

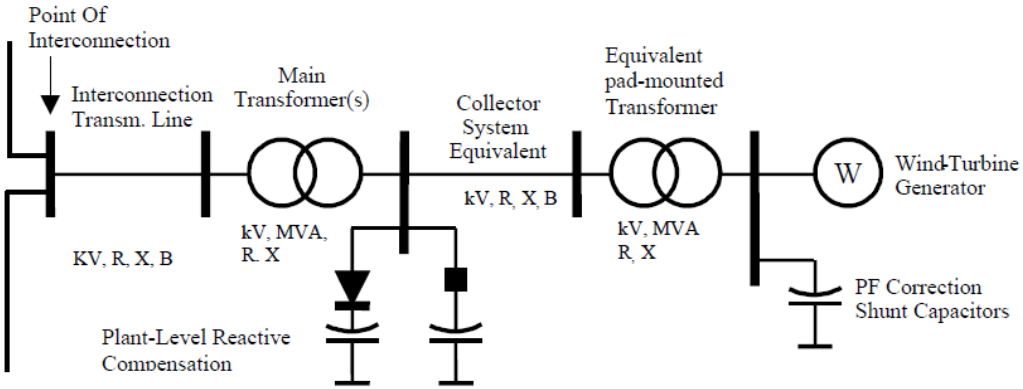

Single-machine representation one-line diagram

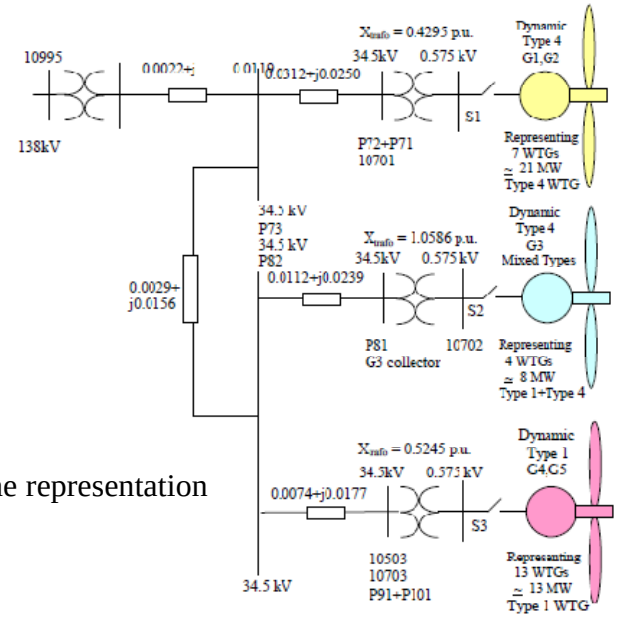

Multiple machine representation

WECC Modeling Guide

- Power Flow Guide
  - Collector system representation
  - Reactive power compensation for different types of WTGs
  - Load flow initialization
- Dynamic Modeling Guide
  - Input dynamic data specification for different dynamic modules unique to specific turbine.
  - Wind plant rating
  - Control settings
    - Voltage, reactive power, power factor
    - Wind speed initialization

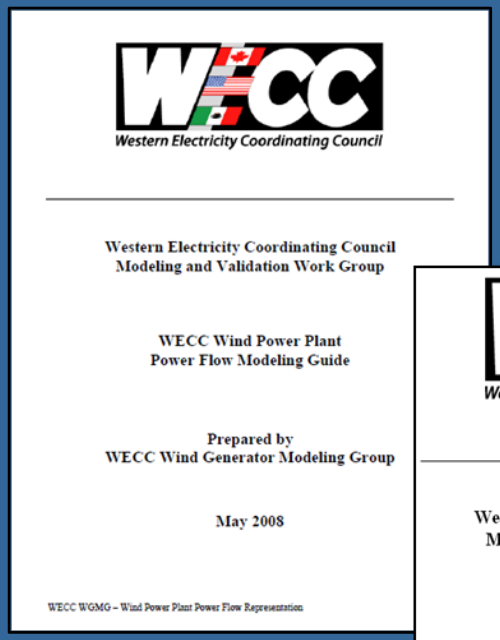
Western Electricity Coordinating Council

Western Electricity Coordinating Council
Modeling and Validation Work Group

WECC Wind Power Plant
Power Flow Modeling Guide

Prepared by
WECC Wind Generator Modeling Group

May 2008

WECC WGMG – Wind Power Plant Power Flow Representation

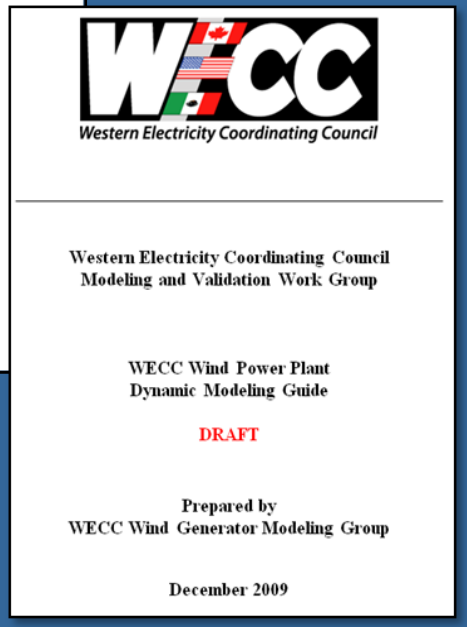
Western Electricity Coordinating Council

Western Electricity Coordinating Council
Modeling and Validation Work Group

WECC Wind Power Plant
Dynamic Modeling Guide

DRAFT

Prepared by
WECC Wind Generator Modeling Group

December 2009

List of Workshops

- WECC – 2009 Generator Model Validation Workshop, held at Tristate Generator and Transmission Association, Westminster, CO May 18-19, 2009
- WECC - 2009 Modeling Workshop for Planning Engineers, held at PG&E, San Francisco, CA, April 16-17 2009
- IEEE Dynamic Performance of Wind Power Generation Task Force (DPWPGTF) "Tutorial on Wind Generation Modeling and Controls," IEEE PSCE Conference, Seattle, WA, USA – March 2009
- Tutorial "Wind Energy Boot Camp" organized by New Mexico State University, PNM, and NREL at Albuquerque, NM, Nov 12-14, 2008
- IEEE Dynamic Performance of Wind Power Generation Task Force (DPWPGTF) "Tutorial on Wind Generation Modeling and Controls," IEEE PES General Meeting, Pittsburgh, PA, USA – July, 2008
- "WECC Wind Generator Modeling Project ", Policy Advisory Committee, California Energy Commission (CEC), Irwindale, CA, 8/20/2007 and Kick off meeting for the, Los Angeles, CA, 8/21/2007
- "Wind Generator Modeling", CEC-PIER-TRP Technical Advisory Committee Meeting, Sacramento, CA, October 3, 2006
- "Equivalencing Large Wind Power Plant", WECC 2006 Modeling Workshop, Las Vegas, NV, June 14-15, 2006

List of Collaborators

- University of Michigan - Ann Arbor; University of Texas – Austin; Tennessee Tech University
- WECC, ERCOT, MISO, CAISO
- IEEE, IEC, IEA, CIGRE
- NREL, Sandia, PNNL, BPA
- Mitsubishi, Vestas, Siemens, GE, Nordex, RePower
- EnerNex, UWIG, Power Tech Lab, EPRI, Operation Technologies Inc.
- Southern California Edison, PG&E, CAISO, Puget Sound Electric, Oak Creek Energy Systems, BPA

Model Data

WT1	WT2	WT3	WT4
Vestas V82 1.65 MW, 50/60Hz	Vestas V80 1.8 MW, 60Hz	GE 1.5 MW, 50/60 Hz	Enercon E66 1.8 MW, 50 Hz
Bonus 1.3 MW, 50/60 Hz	Vestas V47 660 kW, 50/60 Hz	GE 3.6 MW, 50/60 Hz	Enercon E70 2.0 MW, 50 Hz
Bonus 2.3 MW, 50 Hz	Vestas V66 1.75 MW	Gamesa G80, G83, G87, G90 2 MW, 50/60 Hz	General Electric 2SX 2.5 MW, 60 Hz
Mitsubishi MWT1000A 1 MW, 60 Hz	Gamesa G80 1.8 MW, 60 Hz	NORDEX N80 2.5 MW, 50Hz	Siemens 2.3 SWT93 2.3 MW, 60 Hz
Suzlon S66 1.25 MW, 50 Hz	Suzlon S88 2.1 MW, 50/60Hz	REPower MD70 and MD77 1.5 MW, 50Hz	Clipper Liberty 2.5MW 2.5MW, 60 Hz
		REPower MM70/MM82/MM92 2.0 MW, 50/60Hz	Samsung 2.5 MW
		Mitsubishi MWT-92/95 /100 2.4 MW	
		Vestas V90 1.8 MW & 3 MW	
		Acciona 1.5/3.0 MW (*)	
		Fuhrlaender FL 2.5 MW, 60 Hz	

RED: Default WTX model data. BLUE: known ongoing work to identify WTX model parameters

Significance

- Before this work, there were no wind plant models
- Models being used to address numerous questions related to system dynamic behavior
- CAISO has benefitted from the activity in its study of integration of renewables into the grid
- WECC continues to be a leader in the development of the models
- Work feeds directly into providing PV plant models for transmission planning and interconnection studies

Role of PIER Program

- Work helped to build a bridge between the power engineering and wind energy communities in CA and elsewhere
- Work has helped to improve California's ability to add renewables reliably to the grid
- Helped to increase the level of understanding of this important topic, which is still not well understood, throughout the industry
- Activity provided education for many people
- CEC activity provides a foundation for the UWIG model validation and documentation effort with EnerNex funded by ARRA

What Lies Ahead

- CIGRE TF has taken up the topic and written a report
- International Electrotechnical Commission (IEC) has recognized the critical nature of the work and initiated a standard on it
- This area has since been identified by NERC as an area of significant need in the report of the NERC Integrating Variable Generation Task Force (IVGTF 2009)
- Model development has been underway for 100 years in IEEE for conventional plant models, just now getting started for renewables

What Lies Ahead

- The need for models is continuing to evolve with the technology
  - LVRT
  - Frequency response
  - Inertial response
- Growing need for model validation
- DOE synchrophasor initiative expected to provide additional model validation opportunities – ISOs being solicited for participation in model validation effort
- Supply of models is now mandatory, after NERC looking the other way for some years

Future Work

- Generic models have emerged as the correct approach
  - Pressure continues to build in North America, Europe
  - Several activities underway, using WECC Generic Models as foundation
- Existing generic models need to be improved
  - Need to add complete suite of control features
    - programmed inertia
    - frequency support
    - ramp rate control
    - reserve capability
    - controlled injection during fault conditions
  - Need to incorporate software/hardware modifications to newer turbines affected by technology and policy/regulation
- Need more work on model validation, parameter sets, documentation and application guides

Related Activities

- WECC Wind Generator Modeling Group
  - Generic dynamic models and guidelines, model validation and refinement, identification of parameters for different manufacturers
- IEEE DPWPG Working Group
  - Model specifications, validation guidelines, outreach/tutorial, coordination
- Utility Wind Integration Group/EnerNex
  - Documentation, characterization, enhancement, comparative testing, input parameters, technology transfer for the WECC generic models
- Manufacturers/consultants
  - Manufacturer-specific, user-written models (proprietary)
- IEC 61400-27 Working Group
  - Define standard dynamic model specification for wind turbine and plant