Combined Solar Technologies, Inc.

Combined Solar Technologies, Inc

CLEAN WATER CLEAN POWER

Dynamic Renewable Energy Systems

Combined Solar Technologies, Inc History

2000	Idea starts
2003	First company starts
2003 ½	First Company fails
2004	CST Formed
2005	CST lands first Job
2005 ¾	Fired from first Job
2006	DWR tests process
2006 ¾	DWR fires CSTS
2007	Commercial job
2008	VC investment
2008 3/4	First industrial system

Commercial System Features

- 100,000 GPD
- Zero Liquid Discharge
- Bio fuel fired(olive pits, wood chips)
- 92% recovery of water
- Product water (20-40 TDS)
- Dry Sludge waste end product
- 500 kwh/hr electricity produced

CST 100,000 GPD System

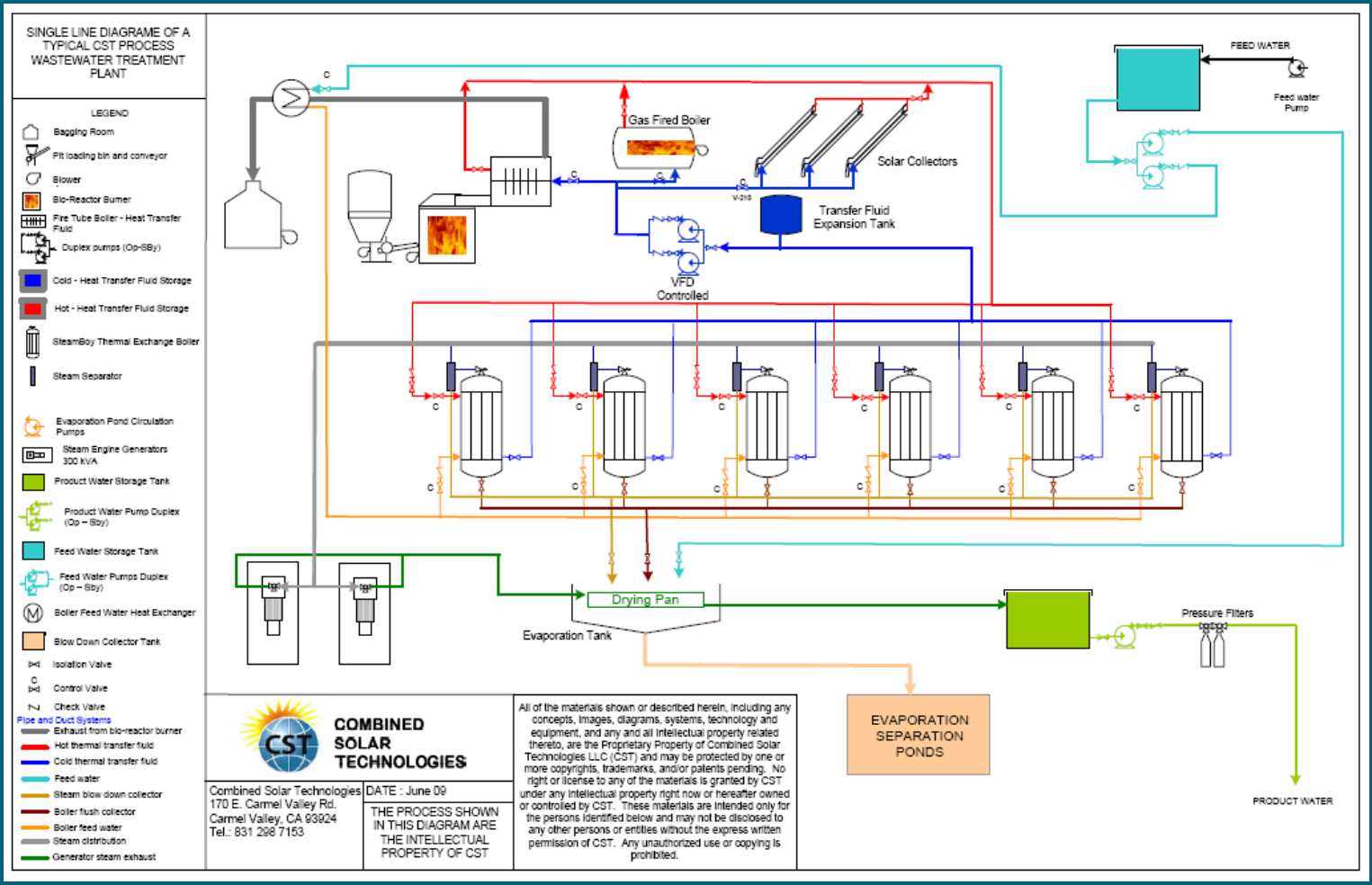

CST Typical Plant Statistics

- From 50,000-10 million+ GPD
- 1-100 megawatt
- 75-2000 tons per day biomass conversion
- 25-500 acre plant footprint
- 600,000 S.F. solar concentrators
- Solids
- 5- 50 fulltime employees
- 25-500,000 tons CO_2 averted per year

CST Applications

- Food Processing Waste Water
- Reverse Osmosis Brine
- Dairy Waste Water
- Agricultural drainage water
- Winery Waste Water
- Seawater
- Oil And Gas waste water

Garage sized SteamBoy

Test site

Small Scale System

Demo System

50 HP Ohmen Steam Engine

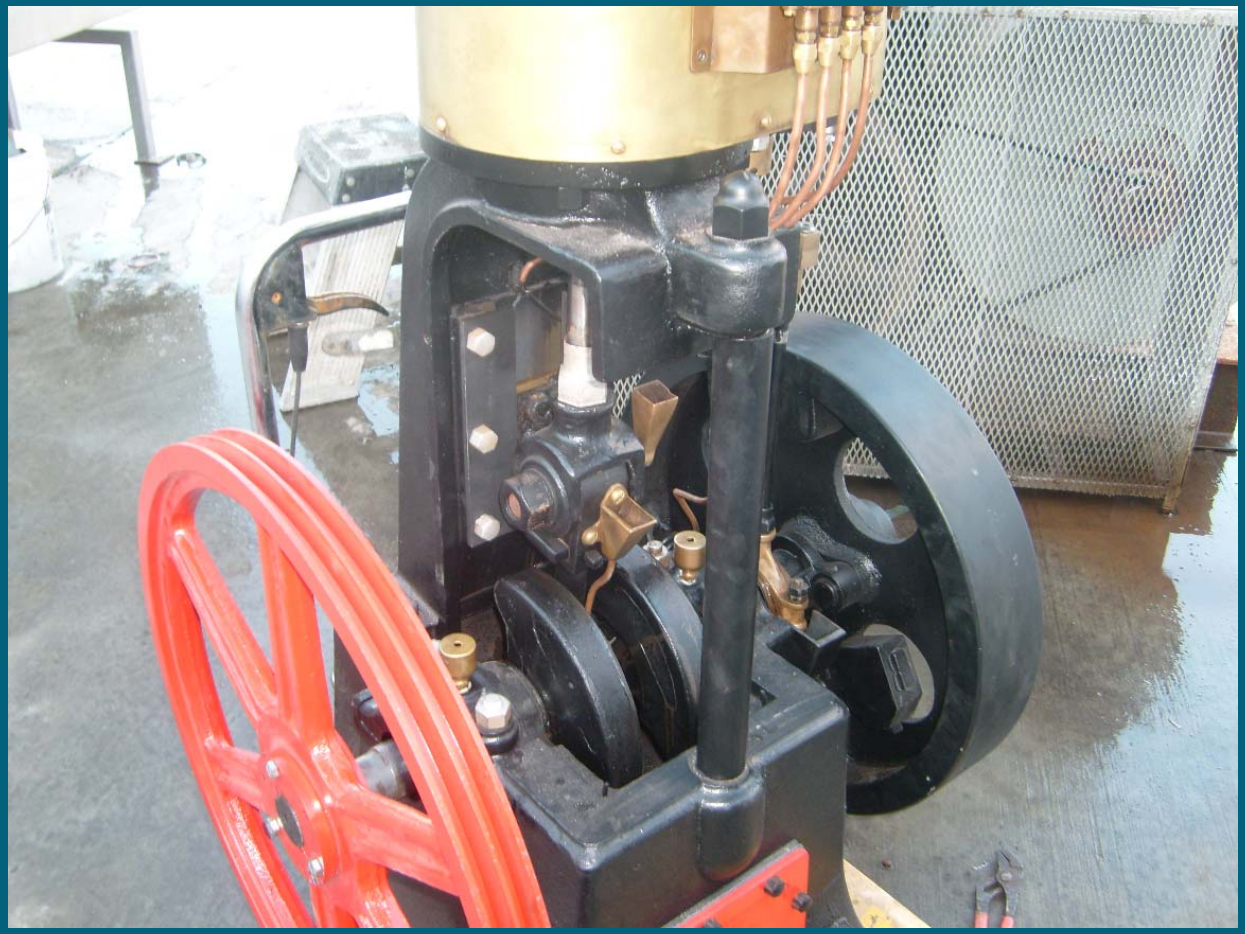

First SteamBoy Steam Engine

New Engine

CST Solar Concentrators

CST Solar Arrays

Industrial SteamBoy

Reactor and HEX

Industrial Scale Heat Exchanger

New Engine Cylinders

Frack Water

Tracy Desalinization and Green Energy Project