CEC Microgrid Workshop
6 March 2015

Statement A - Approved for public release; distribution is unlimited (3 March 2015).

Energy Demand and Renewable Energy

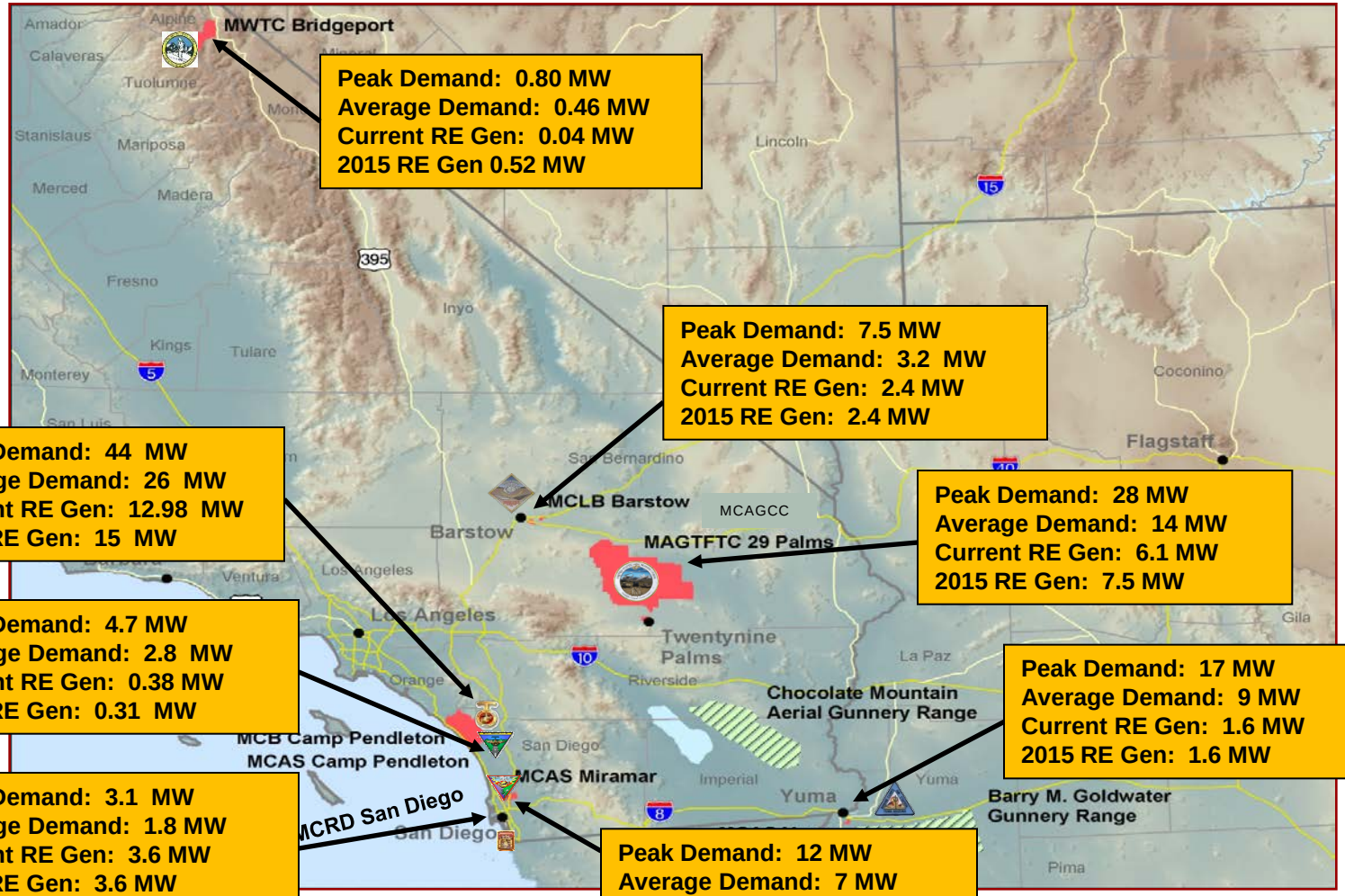

Statement A - Approved for public release; distribution is unlimited (3 March 2015).

MCICOM/MCIWEST Energy and Water Strategy

- Completed August 2013
- Primary goals of the Strategy are **Energy Security** and **Energy Efficiency** (in that order)
- Aligned with MCICOM Energy and Water Strategy – Lines of Operations
  - Energy ***Ethos***
  - Energy Efficiency
  - Renewable Energy
  - Energy Information
  - Energy Security

Statement A - Approved for public release; distribution is unlimited (3 March 2015).

MCICOM/MCIWEST Energy and Water Strategy

- Intent of including microgrid development.
  - Integral role in providing Energy Security
    - Grid failure
    - Cyber terrorism
    - Hedge against power shortages
  - Recognizes the power industry progression
    - UCSD microgrid (success during Sept, 2011 blackout)
    - SDG&E development in Borrego Springs
  - Energy savings
    - Demand response
    - Economic dispatch
    - Conservation Voltage Reduction (CVR)

Statement A - Approved for public release; distribution is unlimited (3 March 2015).

MCAS Miramar Microgrid Overview

Project Details

- **Energy Security Microgrid for Critical Facilities**
- **FY2014 ECIP Project**
- **Cost $18M**
- **Currently in RFP preparation**
- **2 phase full and open acquisition**
- **Phase 1 out Feb 5, 2015**
- **Projected award in 4th quarter FY15**

Project Description

- Install diesel (4 MW) and natural gas (3 MW) generation with the ability to power 100% of the flight line and support facilities (100+ facilities = 4 – 6 MW)
- Incorporate existing onsite landfill power generation (3.2 MW) and existing PV generation (1.3 MW) into microgrid islanding as much as feasible.
- Enable microgrid to participate in demand response during grid connection.
- Primary goal is to utilize microgrid as back-up power to the utility grid for energy security.

Statement A - Approved for public release; distribution is unlimited (3 March 2015).

MCAS Miramar Components

Existing Assets

3.2 MW Landfill Gas Energy Plant

Regional SCADA System

80 Bldg. Central DDC System

1 MW PV Carports

356 kW Thin-Film PV Roof Systems

Smart Microgrid

230 AMI Meters

New Construction

Diesel and Natural Gas Power Plant

Energy Operations Center

Statement A - Approved for public release; distribution is unlimited (3 March 2015).

Modes of Operation

Grid Connected Mode – eliminate energy waste & increase efficiency (95%)

- **Operate Generation Assets**
  - Execute Demand Response with SDG&E
    - Base Interruptible Program estimated savings $252K/year
  - Peak Shaving/Load Management
- **Renewable Energy Systems**
  - Monitoring and analysis
- **Advanced Metering Infrastructure**
  - Real-time monitoring
  - Analytics, trends, and reports for buildings
  - Identify errors, leaks, or spikes in consumption
- **Area Wide Energy Management System (DDC)**
  - Corrective action on building equipment operation (mechanical deficiencies reported to maintenance)
  - Demand Load Limiting Response

Testing and Maintenance Mode – routine testing and maintenance (4%)

- Quarterly all inclusive tests paired with operational responsive drills

Islanded Mode – emergency situation (<<1%)

- Power critical building loads at 100% power
- Coordinate with the installation Emergency Operations Center (Air Ops)

San Diego's "Great Blackout" Sep 8, 2011

Statement A - Approved for public release; distribution is unlimited (3 March 2015).

MCAGCC 29 Palms Energy 2014/2015

- **Power production**
  - **16.4 MW** 2 Cogeneration plants
  - **8 MW PV** systems on line by end FY14
  - **24.4 MW** Total production capacity end FY14
  - Winter peak 15 MW – Summer 26 MW
  - Working Inadvertent Export with utility
- **Energy Security**
  - Cogen plants , PV power production, Grid upgrades with switches and substation communication
  - Microgrid operations EMCS and controls
  - Leatherneck substation 115KV line upgrade

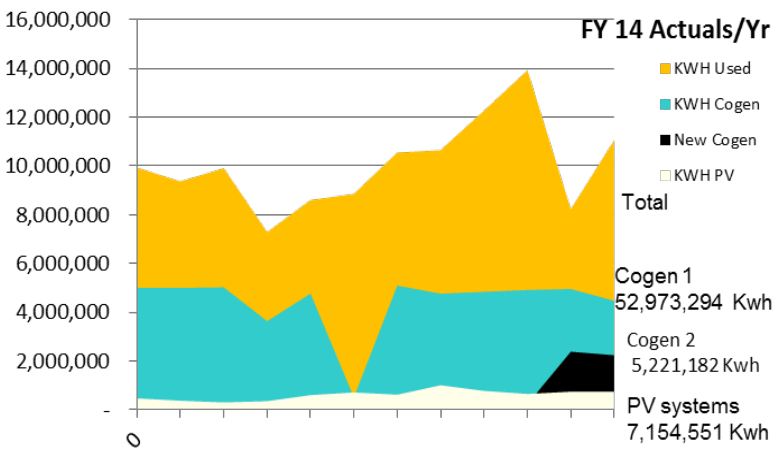

Statement A - Approved for public release; distribution is unlimited (3 March 2015).

ESTCP/GE Microgrid
MCAAGCC 29 Palms

- ESTCP project provides overarching control of existing complex control systems
- Looks for most efficient and cost effective operation
- Provides full automation, recommendation, or manual operation for grid tied or islanded operations
- Follow on projects
  - 1MW battery for 1.2MW PV
    - 564 KW Battery system
  - Capacitor banks and power factor control improvements

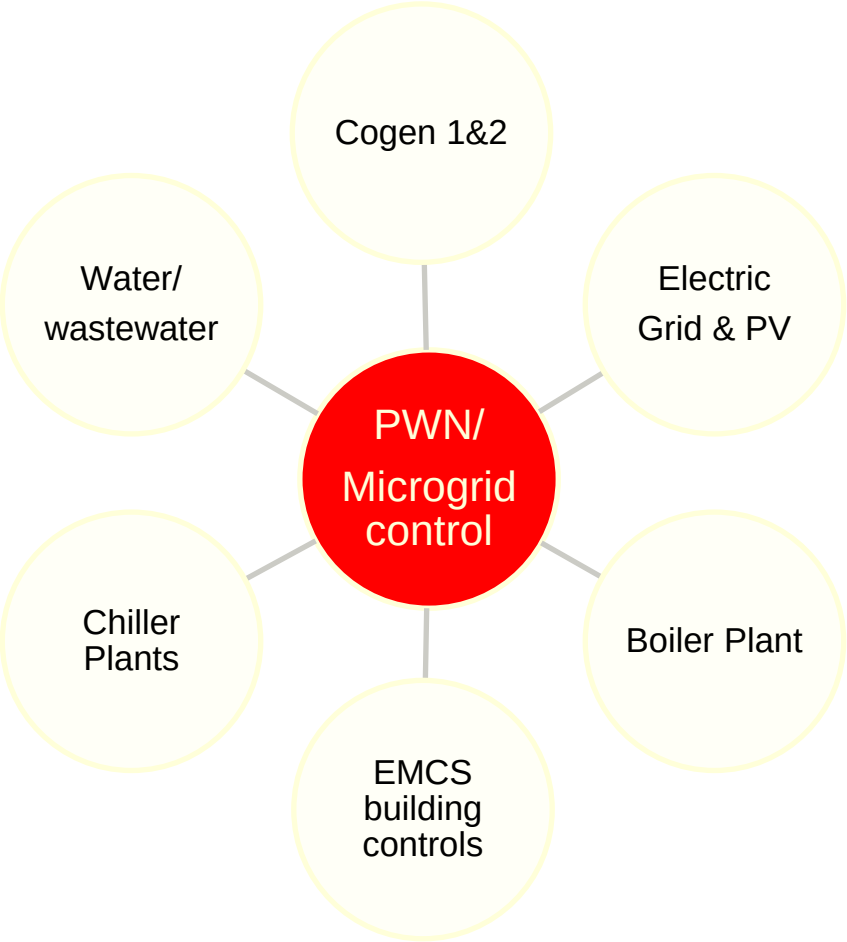

Statement A - Approved for public release; distribution is unlimited (3 March 2015).

MCAGCC 29 Palms Microgrid Features

- **DOD OSD effort: ESTCP contract**
  - GE systems identified as the contractor for install
  - 2 year $2M contract for installation and testing
  - Limited scope using existing points already installed to expand controls
  - Scope includes Controller/server, Capacitor bank, power factor control, and Battery Energy Storage
  - Can be disabled for manual control
- **MCAGCC systems long range plan parallels scope**
  - Will combine all systems into a single control network capable of monitoring, control, and load shedding
  - Generation- Automatic function to switch from normal to renewable and island base
  - EMCS systems- monitoring and load shedding
  - Substation- monitoring, load shedding
- **MCAGCC currently has the largest microgrid microgrid operational. (10 MW). Systems has most elements in place for aggregation and testing**
  - Cogeneration current and new
    - Power monitoring capability
    - HMI controls interface
  - Solar renewable power 3MW - 44 systems distributed
  - EMCS- Energy management Control Systems
    - Fiber/RF network installed
  - Substation infrastructure
    - Sweitzer relays and breaker sets installed
- **Way ahead – 24 MW base wide microgrid**
  - P1232- Will fix all issues with Cogen 2 P129
    - Automatic synchronization
    - Conductors to Gillespie substation
    - Programming
  - Additional work
  - Ground the main 34.5KV power lines
  - Programming and multi-plant controls

Statement A - Approved for public release; distribution is unlimited (3 March 2015).

Microgrid Development at MCIWEST

- MCB Camp Pendleton awarded PIER (Public Interest Energy Research) grant for microgrid development project by California Energy Commission
  - Consists of four microgrids (fractal grids)
  - Completing a “microgrid of microgrids”
  - Could be the model for electric utilities in the future
  - Energy storage provided by locally manufactured flywheels (provides storage for hours)

Statement A - Approved for public release; distribution is unlimited (3 March 2015).

Flex Power System Microgrid Controller

- Command, Control, Communications, Computers, and Intelligence (*C4I*) controller for advanced power systems (distributed generation and microgrids)
- Integrates generation, storage, loads, and utility grid (if desired)
- Enables hybrid microgrid topology with intelligent nodes and intelligent servers
- Each power source, load, and storage has an associated controller, for both AC and DC electrical networks
- Each controller is intelligent, collects data, and stores data locally
- Each layer of the fractal geometry can have an associated aggregator controller that collects data from the lower-tier controllers
- Self healing
- Cyber secure, system hardening

Statement A - Approved for public release; distribution is unlimited (3 March 2015).

Energy Storage

Flexible
Configurable from kW to MW scale in 60kW/100kWh modules
High volumetric energy density and power density
User-friendly dashboard software supports multiple applications
- Off-grid or microgrid systems
- Peak shaving or time-of-use energy arbitrage
- Modbus API interface for robust integration

Simple cost-effective system installation with integrated power electronics

Efficient
95% standby efficiency
90% charge & discharge efficiency
85% system efficiency
Harmonic cancellation
Transient protection
High speed voltage regulation
Power factor correction
Low input current distortion

Reliable
25 year guarantee (core kinetic energy unit)
50,000 full charge/discharge cycles
Robust service and technical support with central data center
Extremely low service and maintenance costs
100% recyclable materials

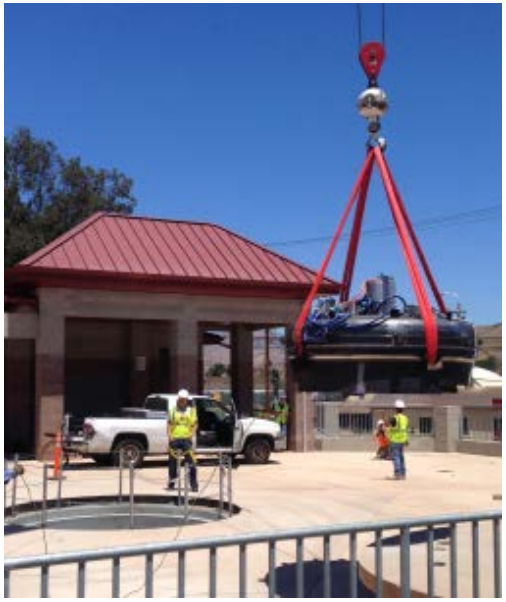

Statement A - Approved for public release; distribution is unlimited (3 March 2015).

Microgrid Structure

Community Scale Microgrid System Overview

- 4 interoperable microgrids
  - 4kW
  - 40kW
  - 60kW
  - 1 MW+

- CPV – 225kW

- PV – 475kW

- Diesel Generator – 200kW

- Storage – 300kWh

Total – 1.1 MW

Future

- Storage – 700kWh*

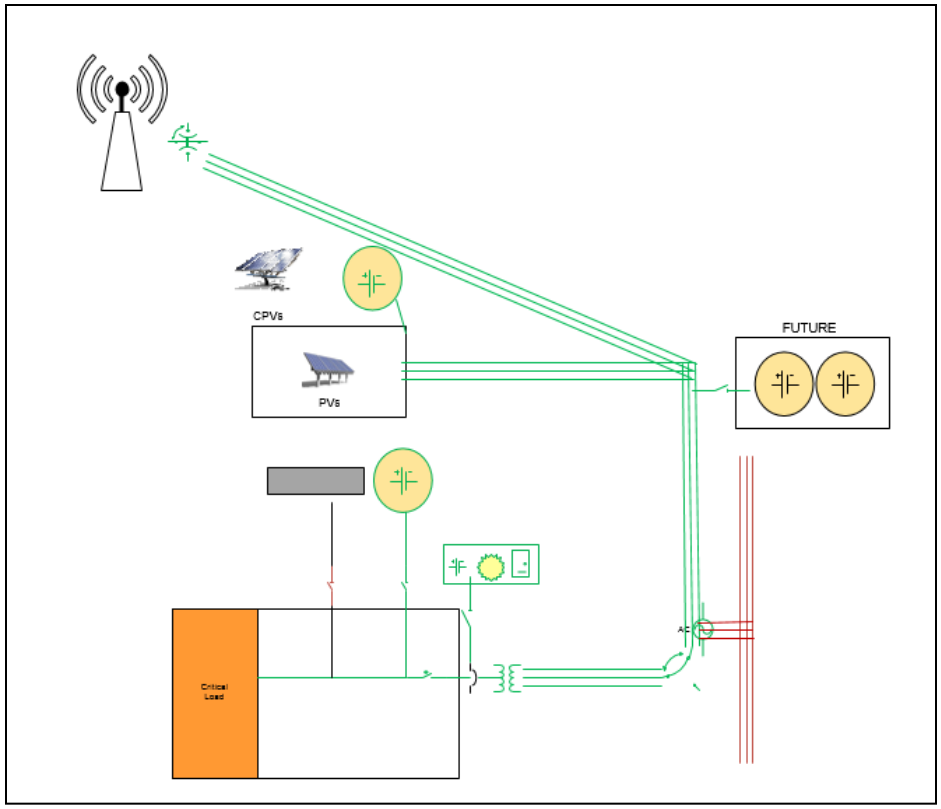

Statement A - Approved for public release; distribution is unlimited (3 March 2015).

Microgrid Development at MCIWEST

- MCIWEST will propose to the CEC and CPUC that it be able to interconnect its installations' microgrids
- Advantages of integrated microgrids
  - Increased energy security for MCIWEST installations
  - Improved energy efficiency for MCIWEST
  - Potential for relieving transmission congestion on Investor Owned Utility (IOU) transmission systems
  - Facilitated IOU Demand Response programs
  - Increased renewable energy development
- Potential to serve as model for California

Statement A - Approved for public release; distribution is unlimited (3 March 2015).