SAE V2G Standards Activities

Hank McGlynn
hank.mcglynn@aeych.com

Leader of V2G Working Group
Communication and Interoperability Task Force
SAE Hybrid-EV Committee

Second Annual California Multi-Agency Update
on
Vehicle-Grid Integration Research

December 14, 2015

Communications & Interoperability Task Force

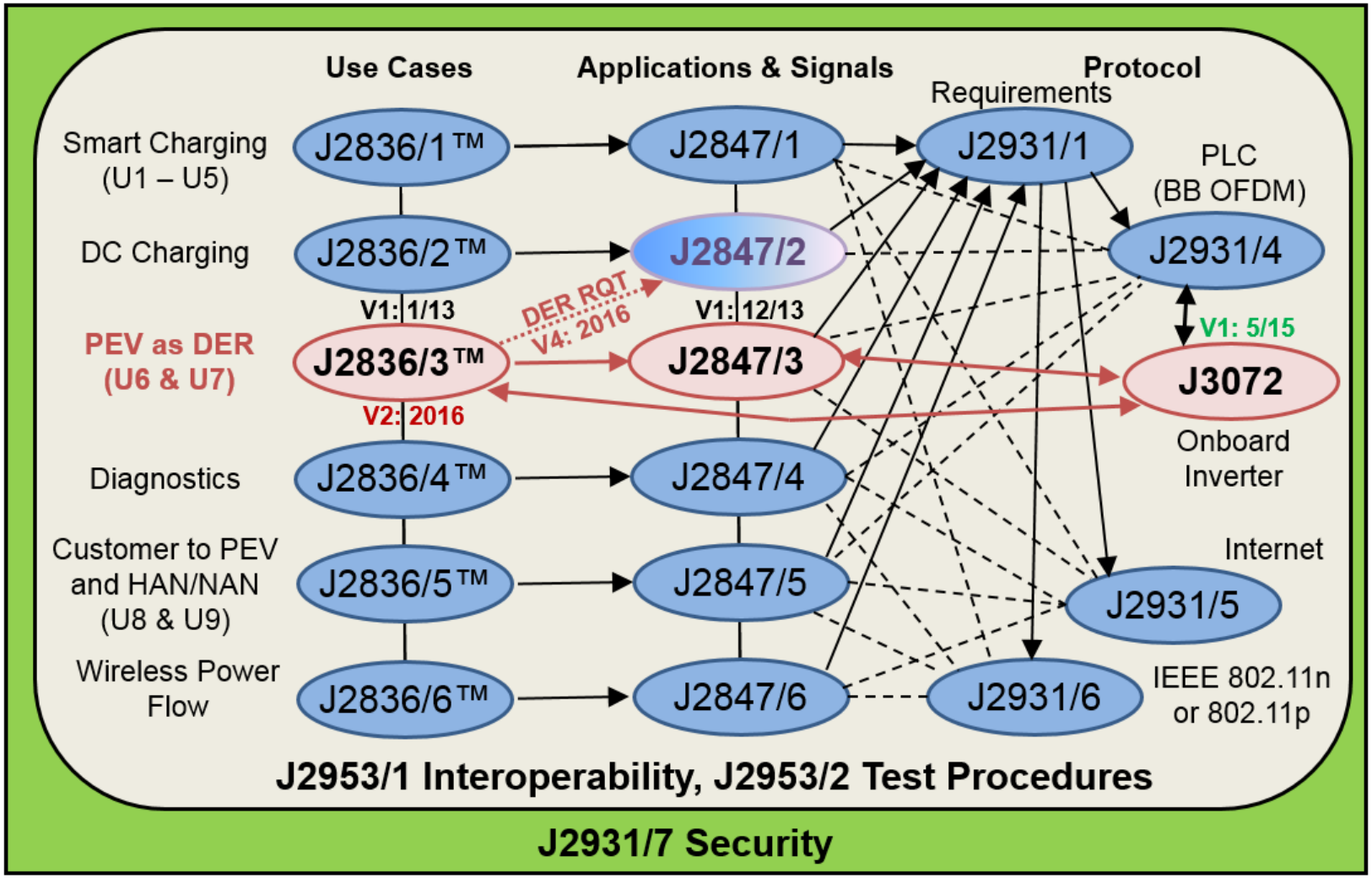

J2836/3™ Version 2 - Rationale

- Restructure to cleanly differentiate between onboard and external inverter
- Add section to define need for J3072
- Add section to extend requirements for EVSE-PEV communication used for DC Fast Charging to support a new DC DER mode used with external inverter
  - J2847/2 will be updated to modify the protocol (Version 4)
  - IEEE 2030.1.1 (CHAdeMO) could add DC DER mode
- Add section to redefine U5 (Optimized Energy Transfer) of J2836/1™
  - Change U5 name to “Flow Reservation” to match SEP2 function
  - Allow either charging or discharging to be requested and scheduled
- Correct miscellaneous errors and omissions

J2836/3™ Version 2 - Scope

SAE INTERNATIONAL

SURFACE VEHICLE INFORMATION REPORT	J2836/3	Proposed MAY2016
	Issued 2013-01 Revised Proposed Draft 2015-12-14 Superseding JAN2013	
Use Cases for Plug-in Vehicle Communication as a Distributed Energy Resource		

Scope: This SAE Information Report establishes use cases by which a Plug-in Electric Vehicle (PEV) with an onboard inverter can operate as a Distributed Energy Resource (DER) and engage in Vehicle to Grid (V2G) applications. SAE J2847/3 will provide recommended practices for implementing these use cases in a PEV which uses the Smart Energy Profile 2.0 Application Protocol. This document also provides guidance for updates which may be required to SAE J2847/2 to allow an inverter which is located in the EVSE to operate as a DER using the PEV battery. While a primary objective is to define communication requirements associated with the use of the PEV as a DER for use by J2847/2 and J2847/3, as an information report it will also provide a broader view of many of the issues associated with reverse power flow and DER applications.

External Power Conversion

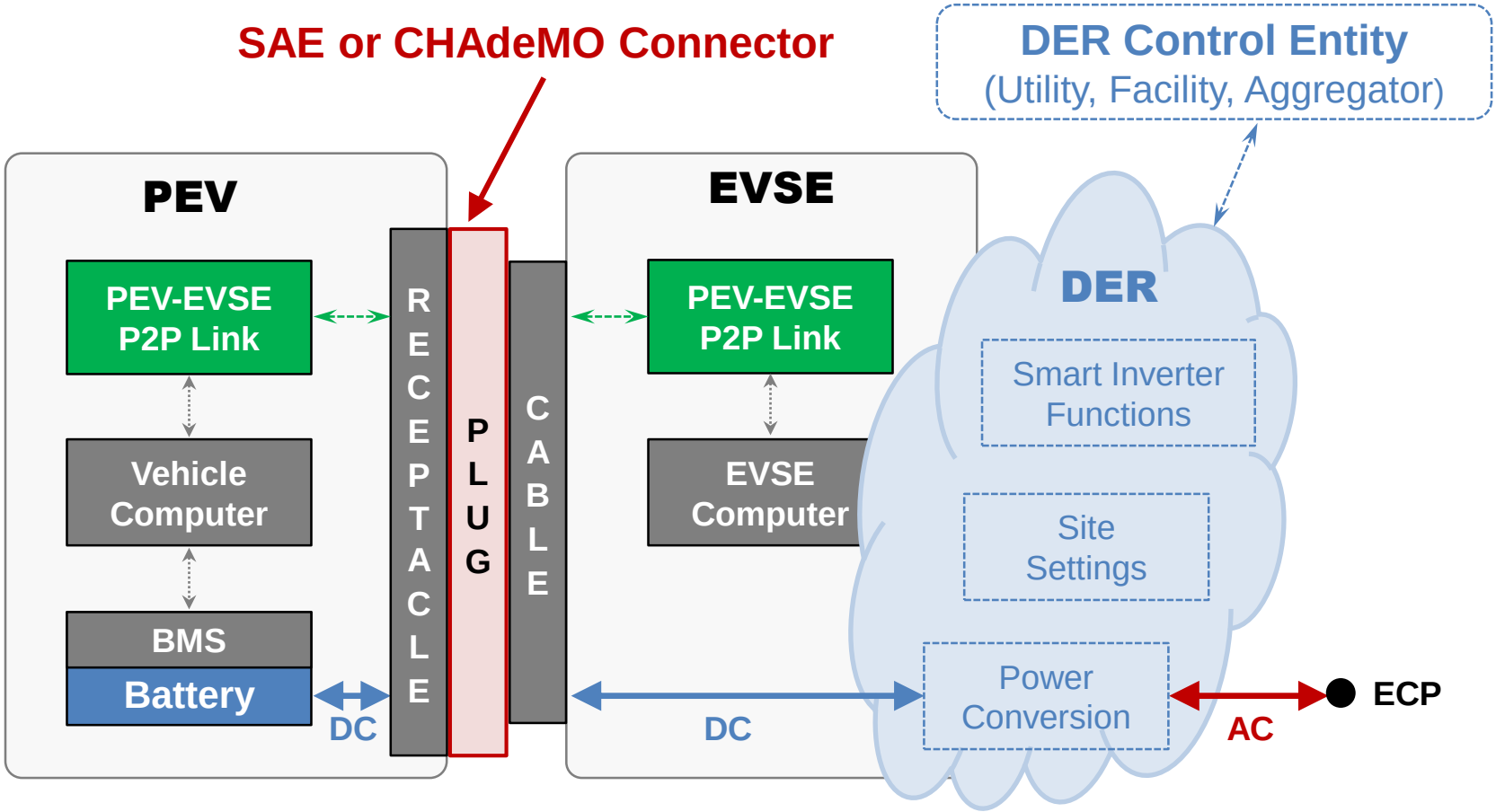

DER Mode to be added to P2P Protocol used for DC Fast Charging

External Inverter – Types of DC Reverse Power Flow

Application	PEV Port	Inverter Mode	EVSE Mode	SAE Type	Comments
Power plug-in loads which are not connected to a facility power system	DC	VF	DC-AC	V2L-DC	Inverter located in a Portable Power Unit with NEMA outlets. DC Port can be SAE DC L1 or L2 or CHAdeMO
PEV is only source of backup power for islanded home (NEC 702)	DC	VF	DC-AC	V2H-DC	Auto V2G-V2H possible. DC Port can be SAE DC L1 or L2 or CHAdeMO
Connected in parallel with utility grid (NEC 705) or to islanded AC microgrid with strong VF source	DC	UI	**DC-AC**	**V2G-DC**	EVSE is smart inverter. DC Port can be SAE DC L1 or L2 or CHAdeMO
Connected to a “weak” islanded AC microgrid	DC	VF/UI	DC-AC	V2M-DA	EVSE either master (VF) or slave (UI). DC Port can be SAE DC L1 or L2 or CHAdeMO
Connected to a DC microgrid which could be in islanded facility	DC	VF/UI	**DC-DC**	**V2M-DD**	Special DC/DC EVSE required. DC Port can be SAE DC L1 or L2 or CHAdeMO

Microgrid Integration (V2M-DD & V2G-DC Modes)

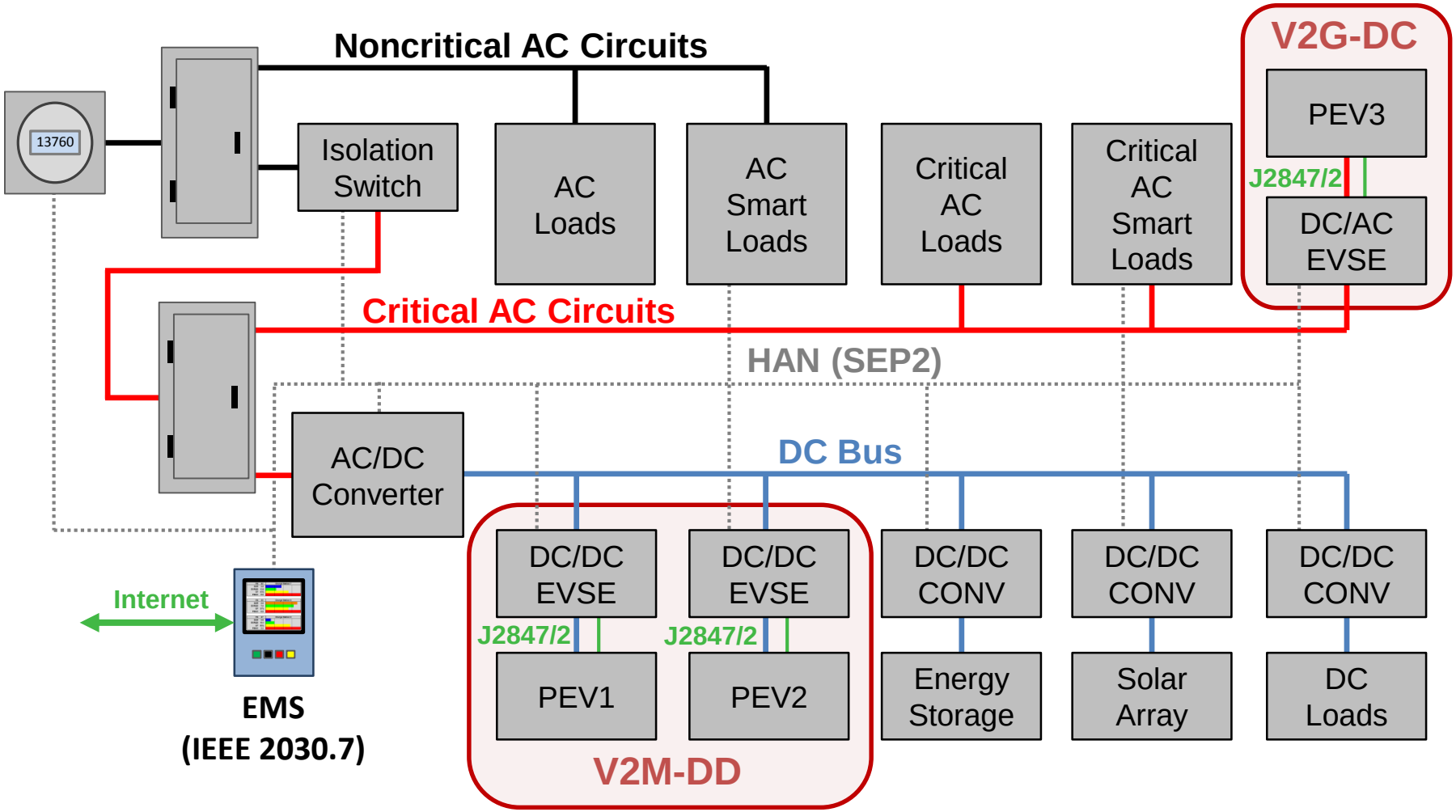

Onboard Inverter System Concept

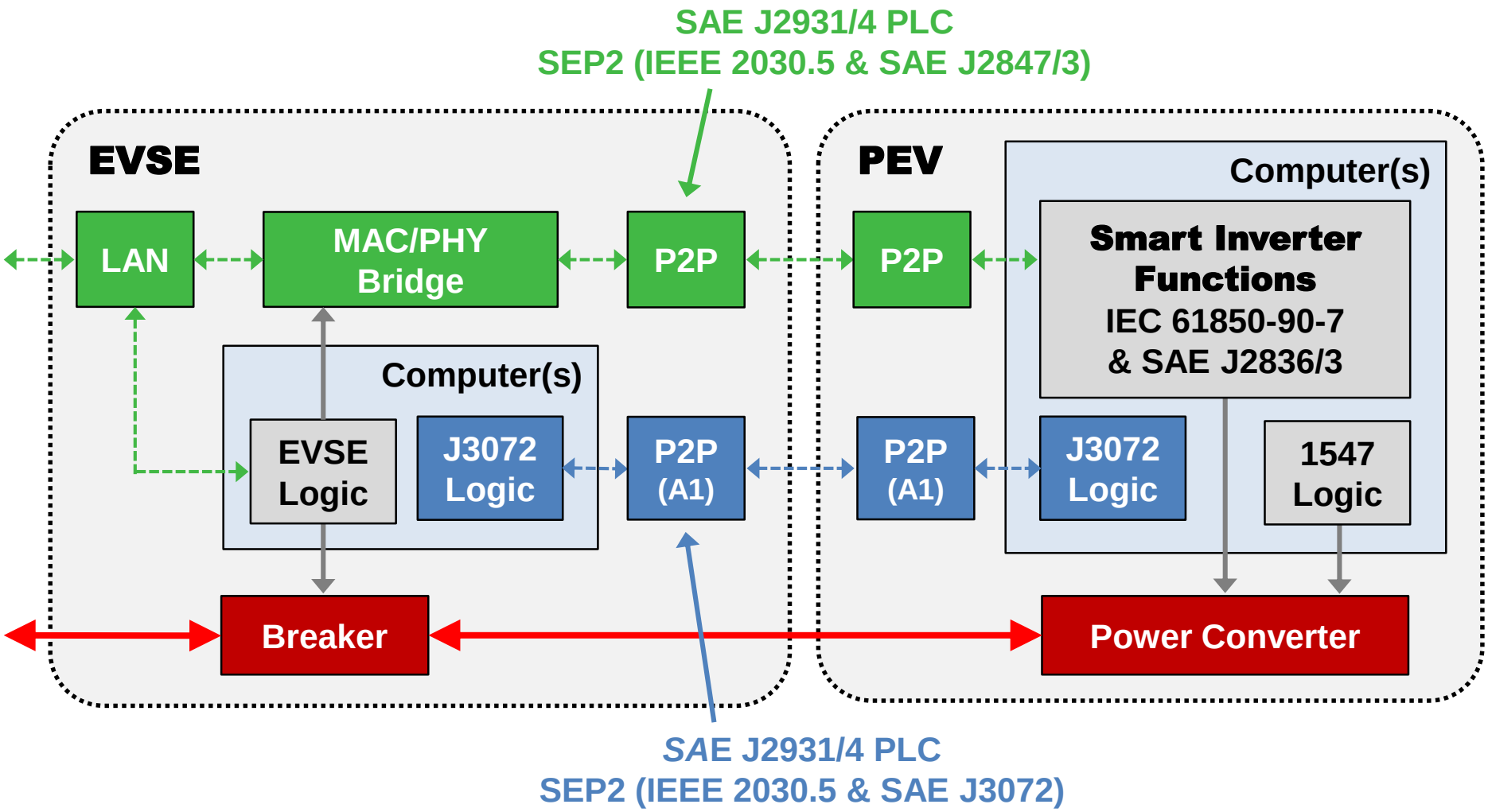

Options to Engage Facility EMS (SEP2)

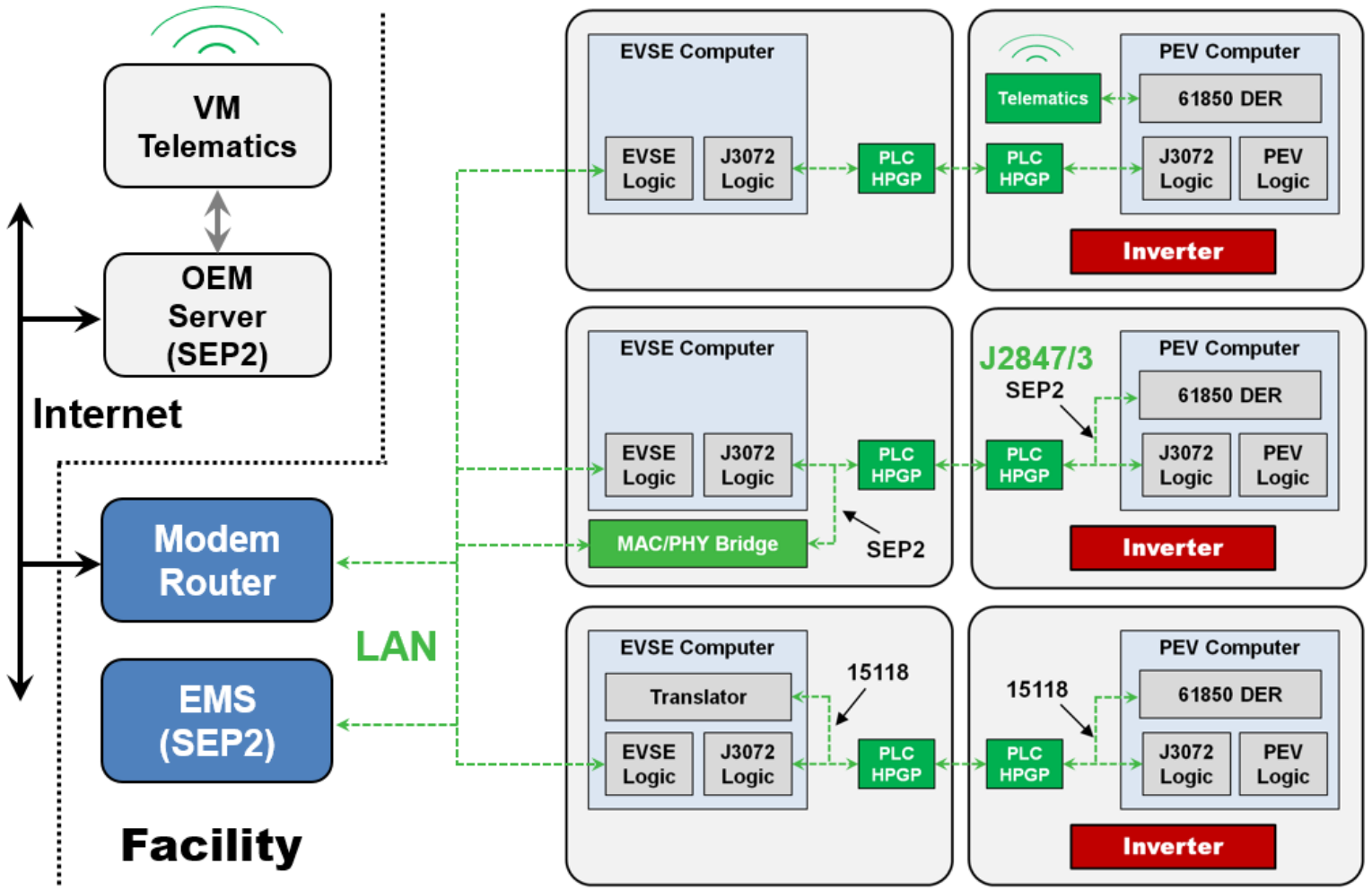

Onboard Inverter – Types of AC Reverse Power Flow

Application	PEV Port	Inverter Mode	EVSE Mode	SAE Type	Comments
Power plug-in loads which are not connected to a facility power system (V2L)	EPP	VF	NA	V2L-EPP	Useful for power at remote sites
	EPP	VF	NA	V2V-EPP	Charging PEV connects to EPP of Supply PEV using AC L1 Cordset
PEV is only source of backup power for islanded home (V2H)	EPP	VF	NA	V2H-EPP	Uses home standby generator port
	AC	VF	Special Design	V2H-AC	PEV may not allow VF Mode via AC Port
Connected in parallel with utility grid or to islanded AC microgrid with strong VF source (V2G)	AC	UI	**J3072**	**V2G-AC**	PEV visible as smart inverter
Connected to a "weak" islanded AC microgrid (V2M)	AC	UI	J3072	V2M-AC	PEV slave (UI) to MG EMS

The Roaming Inverter

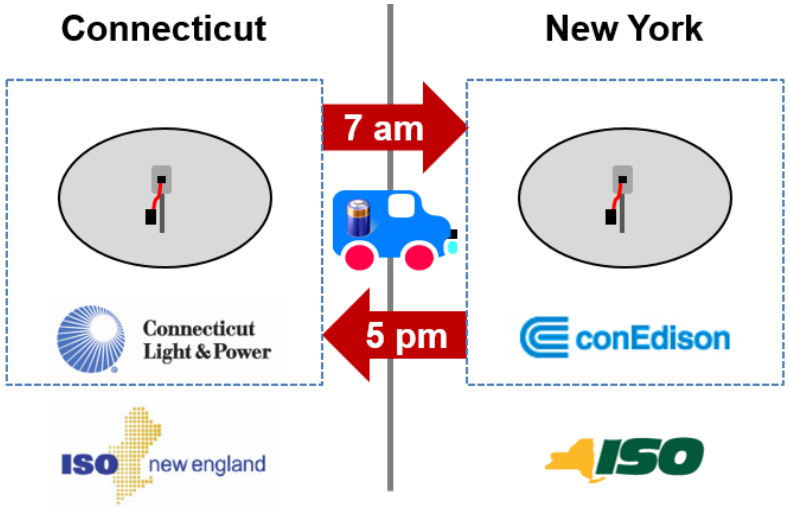

When PEV connects to EVSE

1. EVSE provides site settings to PEV
2. EVSE confirms PEV settings
3. EVSE verifies PEV J3072 certification
4. EVSE authorizes PEV to discharge

Equipment Listings & Certifications

PEV's "Inverter System Model" (ISM) certified by Vehicle Manufacturer to SAE J3072

EVSE Model listed by NRTL to UL XXXX (which calls out J3072 4.5)

Installation Approval by Code Authority

EVSE installation to NEC 625.48 (2017)

PEV equipment is out of scope of NEC

Utility DER Interconnection approval

DER Application uses EVSE Model
Utility role for approval of PEV ISMs?
Authorization to Discharge Method?
- Only by onboard J3072 software tag?
- By EVSE search of ISM database?

SAE J3072 Standard - Scope

SURFACE VEHICLE STANDARD	J3072	MAY2015
	Issued 2015-05	
Interconnection Requirements for Onboard, Utility-Interactive Inverter Systems		

Scope: This SAE Standard J3072 establishes interconnection requirements for a utility-interactive inverter system which is integrated into a plug-in electric vehicle (PEV) and connects in parallel with an electric power system (EPS) by way of conductively-coupled, electric vehicle supply equipment (EVSE). This standard also defines the communication between the PEV and the EVSE required for the PEV onboard inverter to be configured and authorized by the EVSE for discharging at a site. The requirements herein are intended to be used in conjunction with IEEE 1547 *Standard for Interconnecting Distributed Resources with Electric Power Systems* and IEEE 1547.1 *Standard for Conformance Test Procedures for Equipment Interconnecting Distributed Resources with Electric Power Systems.*

Roaming Inverters and Rule 21

- Rule 21 needs to define a process for a utility to use to approve a site for the interconnection of PEVs with onboard inverters which conform to J3072.
  - The application should only require submission of the EVSE model number(s) – not vehicle information expected with the site application.
  - The site is responsible for ensuring that that the total capacity of all connected PEVs does not exceed limits established for the site

- California needs a process to approve PEVs to discharge
  - What data is needed from each vehicle OEM for each Inverter System Model?
    - Provided to CPUC/CEC?
    - Provided to SCE, PGE, SDGE, SMUD, etc.
    - Or Not required to be provided – rely only on certification tag
  - Will Rule 21 require EVSE to verify ISM on some database?
    - No – EVSE checks software tag
    - Yes – then what database?

Smart Inverter Functions and Rule 21

The purpose of an EV is transportation – it discharges its battery by driving. A PEV or EVSE does not need to provide a four-quadrant converter. This only makes sense if the economics justify providing the capability.

Recommend that CPUC modify Rule 21 to exempt a PEV with an onboard inverter from any requirement to implement and operate any smart inverter functions. It should optionally allow a PEV to implement and operate such functions.

J3072 V1 does not require the PEV to implement any specific smart inverter functions nor does it require the EVSE to provide the PEV with volt-VAR curve data for such functions at the time of connection. A PEV could optionally implement smart functions following J2847/3 and a utility could directly communicate with the PEV using IEEE 2030.5 SEP2 to provide any curve data at the time of connection to the EVSE. (No Phase 1 Capability)

J3072 V2 could require a PEV to implement certain smart functions and define associated certification testing. It could also require the EVSE to transfer curve data provided by the utility to the connected PEV as an alternate to direct transfer to the PEV by the utility (but this increases system complexity with two DER controllers for the PEV)

SAE Standard Support by California

- **Several California projects to demonstrate SAE standards**
  - EPRI (CEC Project 14-086): Distribution System Aware Vehicle to Grid Services for Improved Grid Stability and Reliability
  - NRG: EV Storage Accelerator Project

- **To demonstrate conformance to SAE standards, CEC should require that PEVs with onboard inverters:**
  - EVSE and PEV shall conform to J3072 System Type A1 (J1772 AC L2 with SEP2) to validate J3072.
  - PEV shall implement and demonstrate the use of at least the J2836/3 U6 function using SEP2 communication (J2847/3).
  - EVSE shall provide an internet bridge to allow the PEV to engage a DER control entity which uses SEP2 (IEEE 2030.5).

Questions?

hank.mcglynn@aeych.com

(607) 786-5343

BACKUP

J3072 Contents

1. **SCOPE**
2. **REFERENCES**
3. **DEFINITIONS**
4. **TECHNICAL REQUIREMENTS**

4.1 System Concept

4.2 System Types
4.2.1 System Type A1 (SAE J1772 AC L2 SEP2)

4.3 Inverter System Models
4.3.1 Define the Core Inverter System
4.3.2 Identify Inverter System Models
4.3.3 Inverter System Model Number Format
4.3.4 Inverter System Model Example
4.3.5 Configuration Control for Inverter System Models

4.4 Certification of Inverter System Model to J3072
4.4.1 Impact of Configuration Changes on Certification Process
4.4.2 System Test Configuration for PEV Inverter System Model
4.4.3 Notice of Certification to SAE J3072

J3072 Contents - Continued

4.5 Certification of EVSE to J3072

4.6 EVSE Authorization of PEV to Discharge

4.6.1 Connection of PEV to EVSE
4.6.2 Establish Point to Point Communication
4.6.3 Initial Transfer of EVSE Parameters
4.6.4 Initial Transfer of PEV Parameters
4.6.5 EVSE Evaluates PEV Parameters
4.6.6 Active Update and Monitoring During Session

4.7 Smart Inverter Functions

None are required for this version

4.8 Utility interaction (IEEE 1547, IEEE 1547.1)

5. NOTES

A. ACRONYMS

B. INFORMATION DEFINITIONS

C. P2P USING SMART ENERGY PROFILE 2.0

System Concept

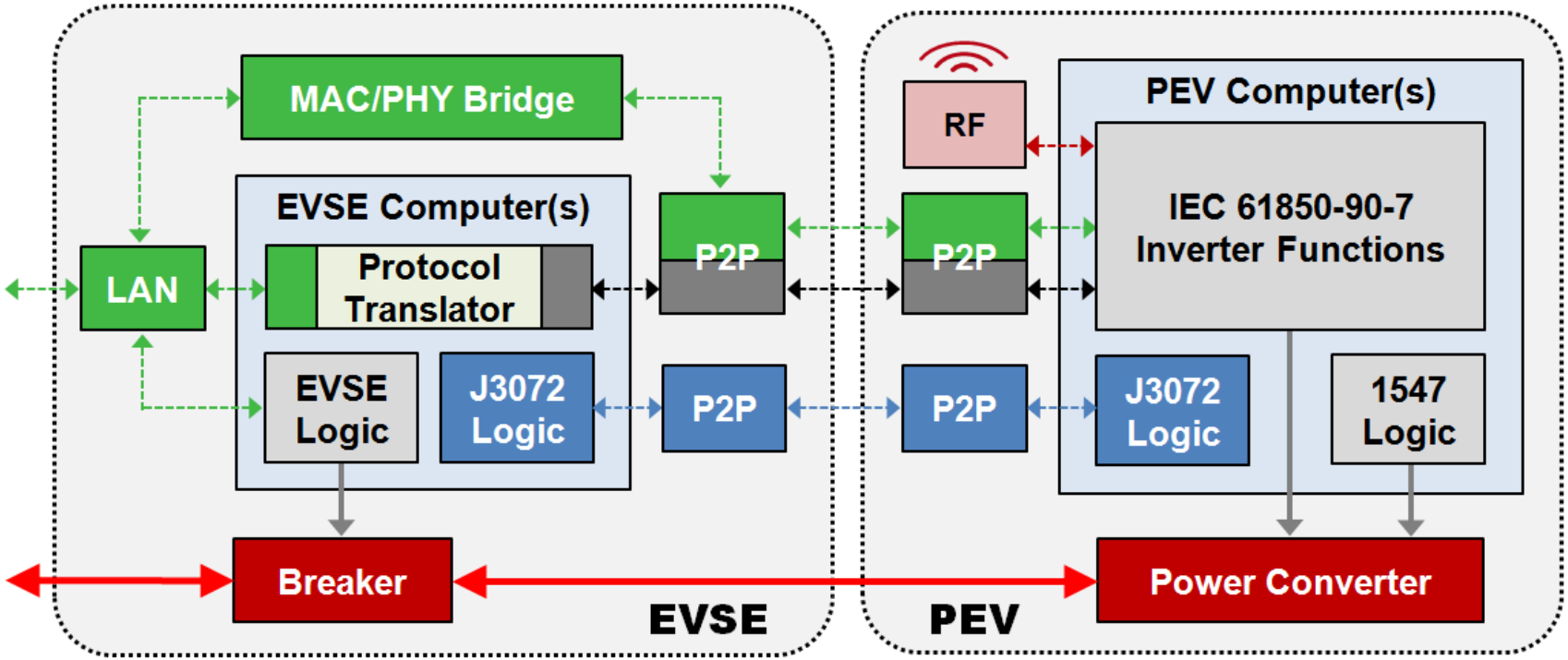

Inverter System Model – not a "box"

Inverter System Model Number Format

1-2	3	4-6	7-32
Type	B/4	WMI	VM designation of an Inverter System Model

Example of Inverter System Models

Inverter System Model Number		
A141J4aaa	A141J4bbb	A141J4ccc

Top Assembly	Inverter System Models						
	xxxG01			xxxG02		xxxG03	
Revision	-	A	B	-	A	-	A

	Description	Core Inverter System Configurations							
Core Inverter System	Part A	A1	A1	A1	A1	A1	A2	A2	Inverter System
	Part B	B1	B1	B1	B1	B1	B1	B1	
	Part C	C1	C2	C2	C2	C3	C3	C4	
	Part D	D1	D1	D2	D2	D2	D2	D2	
	Part E	E1	E1	E1	E2	E2	E2	E2	
	Part F Part G … Part ZZ	COMPONENTS NOT SELECTED BY VM TO BE PART OF INVERTER SYSTEM MODEL							

NOTE: All Changes are Class I at Part Level
C2 are Class II at Top Assembly Level (Rev Letter)
E2 are Class I at Top Assembly Level (Group Change)
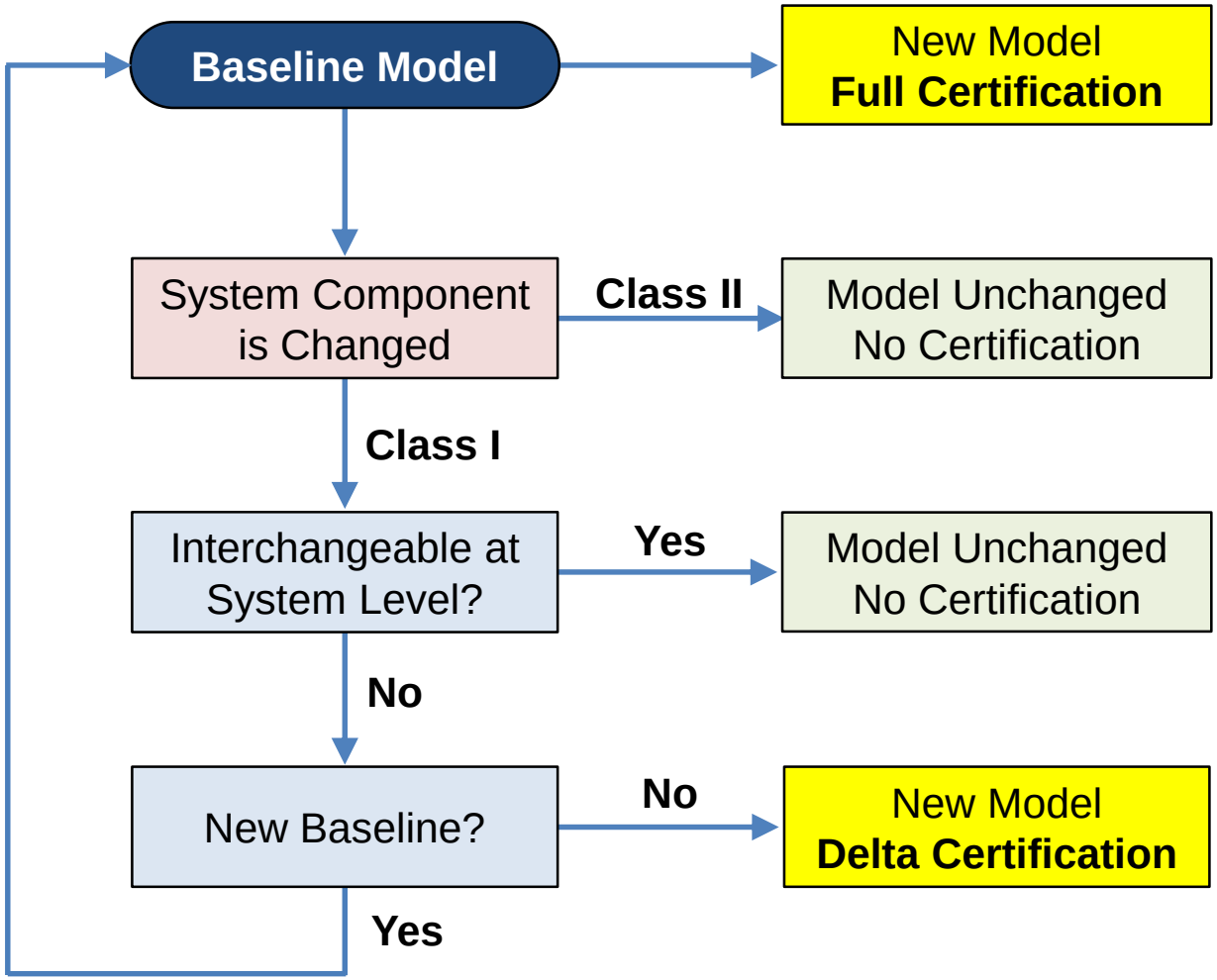
Impact of Configuration Changes