California Energy Commission
Identifying Research Priorities on Flexibility and Other Operational Needs for Existing Geothermal Power Plants
Pre-Solicitation Workshop: January 28, 2016

Written Comments

Josh Nordquist
Director of Business Development
Ormat Nevada Inc.

1. *What are the main barriers and opportunities to operating geothermal power plants in flexible or load following mode? What are the main operational and maintenance cost drivers of geothermal power plants running in flexible or load following mode? What research and development activities should be conducted to address these barriers and cost drivers*?

Geothermal has a long history supplying California's energy. There are geothermal power plants that have been operating for over five decades and others that came online just months ago. Geothermal power plants are typically operated as base-load resources. They produce power at high capacity factors and require much less transmission capacity per unit of energy delivered over time than intermittent renewables. Geothermal power plants can also be operated in flexible mode operation when necessary and can provide ancillary services, such as: real power regulation, dispatchability, voltage and reactive power regulation, ramp up and ramp down, under/over voltage ride through, and under/over frequency ride-through. This is happening today in Hawaii, where flexible operation is required by the utility (refer to Attachment 1).

New binary geothermal projects built to offer a suite of flexibility and other ancillary services do not impose a cost penalty above operating the same facility as a base-load resource. That is to say that the facility will still operate 24/7, just as it would as a base-load resource, while offering flexibility and ancillary services. The capital cost to enable the flexible capabilities above a base-load resource is very small, essentially negligible, meaning that the capital investment for a flexible geothermal facility is the same as a base-load facility.

As others will attest, there are other unique technical challenges to be considered. Converting some existing facilities can introduce limitations in flexible capability. In some unique geothermal resource areas, the conditions of the geothermal resource itself will limit the flexible capabilities of a facility. In these cases, we remind the commission of the importance of base-load resources, the benefits they provide, and that the need for base-load resources will not diminish in the future.

Regarding research and development - we believe that flexible geothermal is already a commercial technology, however, the value of a flexible geothermal resource has not been fully realized. Intermittent renewables introduce integration costs, which will only increase over time,

exacerbating grid operation and reliability. Natural gas moves slowly, cannot react as quickly, and introduces additional costs based on short notice gas purchases and utility and pipeline tariffs. Prices for ancillary services are going to be higher and more volatile in the coming years. Lastly, the theory of Least Cost Best Fit is not being utilized today, and because of this, the influx of intermittent resources will drive up power costs. Please refer to Attachment 2 for further information.

2. *What other operational issues are limiting the success of geothermal power plants and what research and development activities should be conducted to address these issues*?

In geothermal development, the capital cost for a lifetime of "fuel" is paid in the beginning. Fuel, in geothermal's case, is hot geothermal fluid (or steam) that can be reheated and reused. Again, this is another reason why traditionally geothermal is operated as a base-load resource. But this is also one of the main benefits of geothermal. Because the "fuel" is essentially paid for upfront, the cost of power can be fixed for the lifetime of the project. There is no fuel market or volatility.

Both flexible and base-load geothermal can provide this level of cost stability.

Flexible geothermal can provide regulation, load following, energy imbalance, spinning reserve, non-spinning reserve, replacement or supplemental reserve. All of this can be provided with very impact on capital and operational costs when compared to a base-load facility.

The value of providing this cost stability is undervalued today. The indicators that point to the value of non-fuel based flexible resource are visible today, but are not being incorporated fully in the planning procedures.

3. *What specific geothermal generation technologies or enabling technologies have significant potential to succeed in the California market and why? What further research and development is needed, if any, to accelerate the market adoption of these technologies or strategies?*

There will be, in our opinion, a need for both, new base-load and flexible geothermal facilities in California. Studies performed already for California's future energy needs already highlight the importance of both baseload and flexible generators, as well as a balanced renewable portfolio.

Geothermal is traditionally separated into three technology categories; binary, combined cycle, and flash/steam. Today, binary and combined cycle geothermal power plants can operate as a flexible resource. In fact, recent studies have shown that binary geothermal power plants can compete with the response time and ramp rates of simple cycle gas turbines.

Flash and steam based geothermal power plants, especially existing facilities, are technically different and can introduce barriers that limit or prevent them from operating in a flexible manner. Research is being done currently to understand this further. Also, some geothermal

resources will introduce barriers for flexible operation. Resource conditions vary by project, and are carefully considered when designing and operating a facility.

The key to accelerating deployment of flexible geothermal resources in California is not R&D on the generating technology; it is fixing the valuation problem and identifying the true value of fixed cost, reliable, flexible, and renewable resources.

4. *What is the current potential or opportunities for expanding power generation from geothermal and boosting its role in meeting California's renewable energy goals? What are the main barriers preventing more geothermal power from being added to the grid in California*?

The USGS estimates 2,422MW of identified geothermal potential in California and 850MW of identified potential in neighboring states. E3 studied the needs of a 50% RPS and found, in the scenario that produced the least amount of renewable over generation, a need of over 2,500 MW of new base-load geothermal capacity alone. This is under the assumption that flexible generation is provided with fuel-based resources (the other 50%). There are tremendous opportunities for both base-load and flexible geothermal in California.

Additionally, there is much talk recently about the CAISO integration into other western markets. This will open CA's opportunity for more flexible and base-load geothermal from neighboring states such, as Nevada and Oregon, where base-load geothermal is currently being imported into California.

5. *From the grid operation and reliability perspective, are there concerns (e.g. costs and controls issues) or advantages and disadvantages if geothermal power plants operated in flexible or load following mode? What initiatives are needed to address non-technical barriers, if any, to enhancing geothermal power's contribution to grid reliability?*

None. In fact, a flexible geothermal power plant will provide only benefits to grid operation and reliability. I reiterate that ancillary services that geothermal can provide, such as regulation, load following, energy imbalance, spinning reserve, non-spinning reserve, replacement or supplemental reserve. Additionally, it is typical for geothermal power plants to include frequency and voltage control at utility standards. Please refer to Attachment 2 for further information.

Geothermal plants are small and more distributed than the existing base-load or flexible generators, which will provide the benefits of a more distributed resource system, which has also been studied as providing grid benefits within a system with higher influx of intermittent distributed generators (wind and solar).

Work currently in process by the CPUC is identifying the integration cost value of intermittent renewables. This effort should be accelerated and expanded to truly include all integration costs including curtailment, storage, and all other ancillary services.

Automatic Generation Control and Ancillary Services

Josh Nordquist, Tom Buchanan, and Michael Kaleikini

Ormat Technologies, Inc.

Keywords

Hawaii, Puna, Puna Geothermal Venture, Ormat, Organic Rankine Cycle, ORC, Ormat Energy Converter, OEC, Ormat Geothermal Combined Cycle, GCC, Geothermal Combined Cycle Unit, GCCU, Integrated Combined Cycle, IGCC, Integrated Combined Cycle Unit, IGCCU, modular, geothermal, dispatchable power, dispatchable generation, Hawaii Electric Light Company, HELCO, Hawaii Electric Company, HECO, bottoming cycle, integrated two-level unit, ITLU, droop

Introduction—Puna Expansion Facility

In 2005, initial discussions for a proposed geothermal energy expansion between the Hawaii Electric Light Company (HELCO) and the Puna Geothermal Venture (PGV) representatives took place. PGV desired to increase generation from the existing 30 MW contract to a proposed 38 MW contract. In 2008, Governor Linda Lingle, Hawaii Electric Company (HECO), the U.S. Department of Energy (DOE) and the Hawaii Department of Business, Economic Development and Tourism (DBEDT) signed an MOU launching the Hawaii Clean Energy Initiative (HCEI). This initiative set goals at 70 percent of Hawaii's energy to be from clean energy by the year 2030. Renewable energy would comprise 40 percent and the remaining 30 percent would be derived by efficiencies (HCEI, 2013).

An 8 MW expansion agreement was reached between HELCO and PGV in early 2011, representing the first agreement for a fully dispatchable geothermal power plant.

A geothermal project in the Puna area of Hawaii began in the mid-1970s with the development of a geothermal well, HGP-A, in the lower Kilauea East Rift Zone on the southeast side of the Big Island. An experimental power plant was brought online in the early 1980s by the U.S. Department of Energy, producing 3 MW. This power plant was shut down in the late 1980s. During the mid-1980s efforts began to develop a larger project, based on the success of the experimental unit, but focused on utility scale generation. Driven by the Public Utility Regulatory Policies Act (PURPA), enacted in 1978, which promoted the use of domestic renewable energy, Constellation Energy, with funding from investors, mainly Credit Suisse, teamed up with OESI to develop the project. The joint venture was named the Puna Geothermal Venture.

The PGV power plant was commissioned in 1993. It was a 25 MW power plant comprised of ten Ormat Geothermal Combined Cycle Units (GCCU). These GCCUs were the first of their kind, patented by Ormat, to integrate both a unique back pressure steam turbine and Organic Rankine Cycle into a modular power unit. Additionally, all of the GCCUs were air cooled, requiring no water for operations. In 1995, PGV successfully negotiated with HELCO to increase the Power Purchase Agreement from 25 MW up to 30 MW.

The geothermal resource at PGV was, and still remains, one of the hottest in the world. Geothermal wells at PGV flow steam and brine at temperatures of 600°F (315°C) at a high pressure of 1,430 psi (100 bar).

In 2004, after 11 years of successful operation, PGV was purchased by Ormat Technologies, Inc. (the same Ormat who manufactured the GCCUs at PGV) and added to Ormat's growing fleet of operating geothermal power plants.

Ormat, now the household name in geothermal energy, began focusing on the benefits of clean, reliable energy over four decades ago. In the early 1970s Ormat commercialized the Organic Rankine Cycle technology for the application of remote power solutions, manufacturing small (in today's standards) power units in Massachusetts. In the early 1980s, Ormat ventured into geothermal, commercializing low temperature geothermal power in the U.S. As low temperature geothermal power generation began to grow in the US in the early 1990s and Ormat's technology was proving to be the primary choice, Ormat began to expand the application for its OEC to offshore platforms and waste heat recovery installations. In the late 1990s Ormat expanded to owning and operating geothermal projects that generate revenue through electricity sales. Today, with over 611 MW of geothermal and Recovered Energy Generation power plants, and with over 1,600 MW of installed OEC capacity worldwide (Ormat, 2013), Ormat has firmly planted itself in the development and support of clean energy, and has been able to prove, where many have failed, that there is a long-term, reliable, solution for the world's energy crisis.

Puna Geothermal Venture 8 MW Expansion Project

In February 2011, after the expansion project agreement was reached between HELCO and Ormat, HELCO submitted the proposed Power Purchase Agreement (PPA) to the Hawaii Public Utilities Commission (PUC) for approval. In December 2011, the Hawaii PUC approved the PGV 8 MW Expansion project.

Reducing energy rates to HELCO's customers, reducing Hawaii's dependency on fossil fuels, increasing reliability and optimizing the existing geothermal resource are just four of the immediate benefits the PGV facility and HELCO would experience. Additionally, HELCO would have the ability to direct the net output of the PGV facility remotely by the System Operator. This ability required definition of many technical requirements for the new expansion and existing facility that may or may not be currently present. For example, droop settings were required to be at 4 percent without a deadband. Ramp rate was required to be 2 MW per minute along with a quick load pick up feature of 3 MW in 3 seconds. Net output control was to be between 22 MW and 38 MW. Over and under voltage would be applied at levels HELCO experiences and responds to currently. Ormat engineers would be required to provide solutions to meet these detailed requirements for replacing oil-fired units for an island grid system. Ormat committed to these solutions and specific operating requirements.

State of Renewables in Hawaii

In 2012, Hawaii achieved 13.9 percent of energy needs from renewable energy, well on the way to achieving an intermediate goal of 15 percent renewable generation by 2015. When combining renewable energy and energy efficiency mechanisms, Hawaii has achieved 28.7 percent of energy from clean energy sources (the goal for 2030 is 70 percent) (HCEI, 2013).

On the island of Hawaii, 40.9% of all energy produced in 2012 was from renewable facilities with PGV accounting for 22.8% of the total.

Another First for Ormat and the Geothermal Industry

As mentioned prior, the expansion of the PGV facility is the first fully dispatchable geothermal power plant. For the last three decades, geothermal developers have been focused on selling geothermal energy as a base-load renewable energy product. PURPA created a market for this energy in the 1980s and 1990s through Standard Operating #4 (SO4) contracts. The growing need for renewable energy through Renewable Portfolio Standards (RPS) developed by states sparked renewable energy development beginning in the new century and continuing today. The RPSs also promoted the growth of solar and wind development, intermittent sources of energy. High growth in solar and wind development drove equipment prices lower and, combined with the lower risk of development, accelerated the development of these resources throughout the U.S.

While the accelerated growth of renewables is a major achievement to reduce dependency on fossil fuels, it created an issue with utilities. Intermittent renewable resources are hard to predict and out of their control, while their electricity demand is known and must be met. In order for utilities to react to intermittent resources they need dispatchable power resources. For a utility, this is not something new and there are a number of fossil fuel-based dispatchable solutions available. Geothermal was not considered a dispatchable renewable technology, until today.

The situation in Hawaii was similar to the U.S. mainland. There has been considerable growth in solar and wind resources over the past years. Also, as Hawaii's electrical grid is generally smaller and isolated, fluctuations in the hour to hour load that the utility needs to provide is relatively greater. Hence the value added of a renewable power generation resource that could be fully dispatchable. Ormat was the innovator that found a solution and Hawaii (HELCO) provided the trust that Ormat could do it.

The adaptation of the base load power plant to fully dispatchable was no easy task. While many qualities were physically present, a number of changes, new technology, and testing were required. To add to the challenge, PGV is still required to produce base-load energy until the dispatchability was achieved.

Technical Aspects of the 8 MW Expansion – Developer's Perspective

Prior to the expansion the PGV power plant, the geothermal wellfield consisted of multiple artesian production wells deliver-

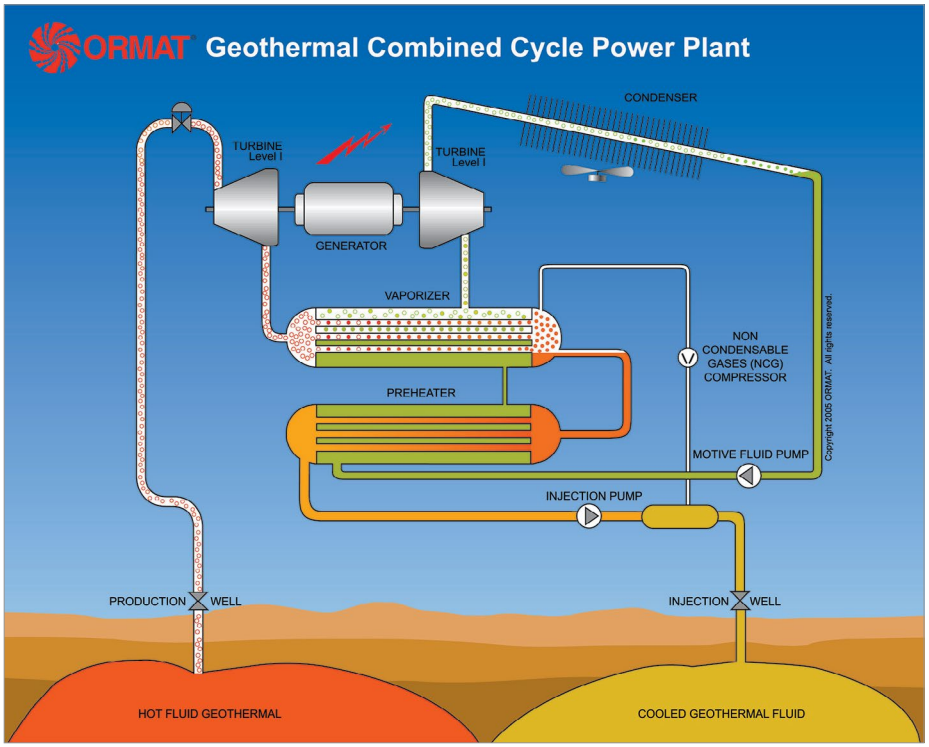

Figure 1. Diagram of an Ormat Geothermal Combined Cycle (GCC).

ing two phase geofluid to a single flash steam separation unit. The steam from the separation unit was supplied to 10 Ormat GCCUs. The separated geothermal brine was sent directly back to the wellfield for injection.

Ormat Geothermal Combined Cycle (GCC) technology converts the steam energy into electrical power by expansion of the steam through a back pressure steam turbine and then condensation of the steam in a vaporizer of a secondary working fluid. The condensate is returned to the wellfield for injection. The vaporized working fluid is then supplied to a second turbine for power generation and then passed to a condenser and cycle pump for a closed-loop Organic Rankine Cycle (ORC) (Figure 1).

In this arrangement the separated geothermal brine still carried significant enthalpy, but was simply returned to the wellfield for injection. In order to take advantage of this enthalpy source, two Ormat Energy Converter (OEC) bottoming units were added through the power plant expansion to improve overall recovery and optimization of the resource. The integration of two bottoming cycle OECs converted the PGV facility into an Integrated Geothermal Combined Cycle (IGCC) technology arrangement (Figure 2).

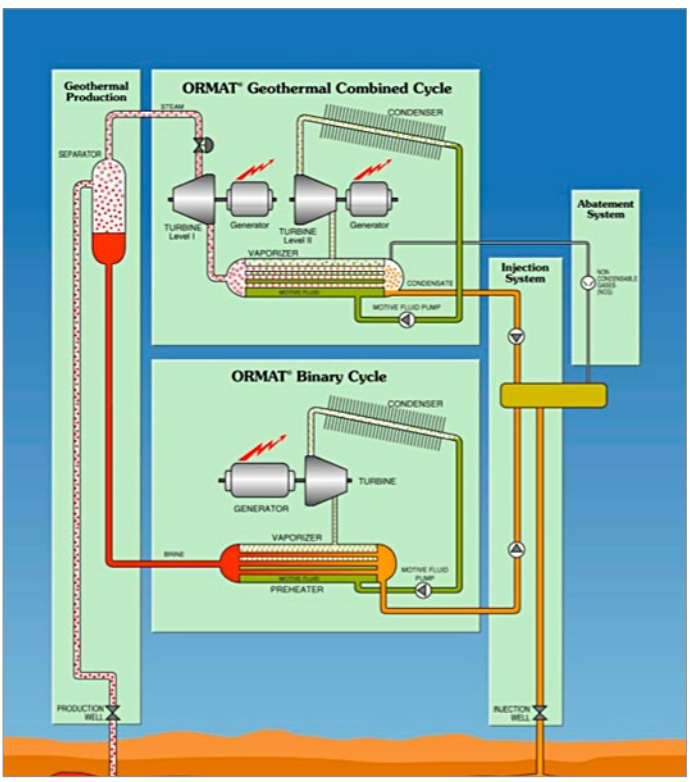

Figure 2. Diagram of an Ormat Integrated Geothermal Combined Cycle (IGCC).

The additional bottoming units provide several resource benefits. Brine is used to increase power generation by 8 MW without increasing geothermal fluid production resulting in the optimization of the geothermal resource. Cooler injection fluids results in an increase in injection capacity due to an increase in density and, therefore, inertia. With the additional capacity of the two bottoming units, only nine of ten GCCU's need to operate in order to reach full output. The tenth spare GCCU allows maintenance on the steam units to be performed with minimal impact on overall output.

Utility/Grid Perspective

In addition to the added 8 MW of capacity, the expansion project was tasked to provide dispatchable generation. Historically geothermal power generation has been considered base-load power, that is, the geothermal facility produces all the power it can generate and other generators on the grid adjust their generation level to match overall grid demand. On large grids where geothermal generation is a small portion of total generation this base-load approach works well.

On an isolated island grid, or other grids where renewable generation is a larger portion of total generation, the key to increasing the penetration of renewable generation resources will be the ability for any renewable resource to provide the technical aspects that were typically only provided by fossil-fueled generation units. This allows participation in the grid's Automatic Generation Control (AGC). AGC from a renewable generation resource provides the utility the ability to remotely dispatch the facility, 24 hours a day.

AGC is a computerized control system used by grid system operators to control multiple generators connected to the grid to closely match generation-to-load demand. An electrical grid must closely match generation to the continuously changing load demand on the system. This requires frequent adjustments to the power output of the various generators. In simple terms, the AGC watches the frequency of the grid, if it is increasing this means there is more generation coming into the grid than the load is consuming and, vice-versa, if frequency is decreasing there is not enough generation to match the load. AGC then automatically requests adjustments to the generation being contributed by all of the connected generators. Before AGC, a single large generator was operated in isochronous (fixed speed) mode to set the frequency of the grid and all other generators connected to the grid would operate in "droop speed" mode to adjust their output to balance the frequency of the grid. AGC allows more flexible participation of load balancing for all generators connected to the grid.

Remote control capability is accomplished through communication between the HELCO system operator AGC and the PGV facility System Control and Data Acquisition (SCADA) system. By allowing communication between these two computerized control systems, the network system operator can automatically request adjustments to the plant generation to match grid demand while in coordination with other generation facilities connected to the grid. The communication also allows the plant SCADA system to update the system operator on available capacity and spinning reserves.

In order for the PGV facility to participate in the HELCO AGC, the power plant must be capable of operating over a wide range of power generation. It must be able to adjust its power output quickly in response to the AGC (Ramp Rate) and it must maintain its frequency within close tolerance of the grid (percentage droop). This is an unusual task for a geothermal power plant since the heat source, especially artesian wells, naturally do not respond quickly to changes in demand, yet power generation must be managed to quickly respond to the AGC generation request.

This requirement of quick response to changes in power generation while maintaining stable operation of the geothermal resource became the first challenge for the design. The requirement is to quickly turn down generation and quickly turn up generation within reasonable ranges. The solution Ormat settled on was to maintain geothermal fluid flows from the wellfield at relatively steady rates and find ways to provide bypass for fluid or heat around the generation equipment as needed, governed by the power demand from the AGC.

Bypassing geothermal fluid around some of the generating units to balance the generation with demand works but the response times are slower than what is usually required by the contract ramp rates. In order to improve response times and provide a level of spinning reserve required by HELCO, Ormat chose to provide bypass for some of the heat input to a particular OEC or GCCU by using a turbine bypass. This would allow some of the heat absorbed by the organic working fluid to be passed around the turbine and dumped directly into the condenser.

The final solution required a coordinated and orderly response to changes in power generation demand and must be balanced between the two new bottoming units and the ten existing GCCU's. This control must be coordinated for all twelve of the generators within the PGV facility and is the brains of the dispatchable solution.

Description of the AGC Response Solution

Definition of Requirements and Constraints

- Each unit was evaluated for its safe stable maximum and minimum operating capacity.
- The sum of the unit minimums defines the overall plant minimum generation.
- The sum of the unit maximums defines the overall plant maximum generation.
- The AGC must limit its generation request between these overall plant maximum and minimum generation. By contract these limits were set at 38 MW maximum and 22 MW minimum.
- An allocation and priority of generation dispatch was established for all generating units. It was determined that, based on several variables and considerations, the two bottoming units would be dispatched first down to their defined minimum stable operating capacity, further dispatch would come from the older GCCUs. Lastly, in the event of emergency over frequency situation, the steam turbines bypasses will be used to quickly reduce generation and therefore over frequency.
- The plant overall generation needs to respond quickly to AGC requirements. By contract the response rate (ramp rate) up or down was set at 2MW/min.
- In order to meet the ramp up rate, a certain amount of spinning reserve must be maintained. This spinning reserve would be achieved by maintaining excess flow of organic vapor from each units vaporizer. The excess flow would be bypassed around the turbine directly to the condenser. In the case of ramp up requirement the turbine injection valves would respond by opening and the turbine bypass valve would respond by closing to maintain pressure in the vaporizer. By contract the base value of spinning reserve is required to be 3 MW.
- For the droop speed mode of control, each generating unit must maintain an allowed droop frequency to work with the AGC. The required droop was established at 4 percent.
- In addition to grid frequency control, the grid voltage must be maintained by the AGC. The voltage required by the grid would be controlled by a standard voltage regulator on each generating unit.

AGC Inputs to the PGV SCADA System

The AGC provides continuous input to the PGV SCADA system for the following parameters:

- Required Net Power – This is net delivered power to the grid.
- Grid Frequency – This is the currently required frequency of the grid.
- Grid Voltage – This is the currently required voltage of the grid.

The PGV SCADA System Feedback to the AGC

The PGV SCADA system provides continuous feedback to the AGC about its generating capabilities and includes the following parameters:

- Current Actual Spinning Reserve – This is the currently available spinning reserve in MW from all units.
- Current High Limit Available Dispatch – This is the current plant net generation plus the current actual spinning reserve from all units.
- Low Limit for Available Dispatch – This is the sum of the minimum stable generation for each operating generating unit.

Control Philosophy

Net Delivered Power

The HELCO AGC determines net required power from the PGV facility and provides the Required Net Power set point to PGV. This set point must be within the constraints of High and Low limits of dispatch control.

The control scheme for Net Power control follows the simplified diagram in Figure 3.

Spinning Reserve Management

In addition to maintaining the AGC required net power, the plant must maintain a minimum spinning reserve. Under most conditions the actual spinning reserve will exceed the 3 MW. Spinning reserve is created by adding excess heat to the vaporizer and then diverting some of the vapor flow around the turbine directly to the condenser. An optimum vaporizer pressure set point is established for each unit. This vaporizer pressure is maintained by relieving the excess flow though the turbine bypass valve. The

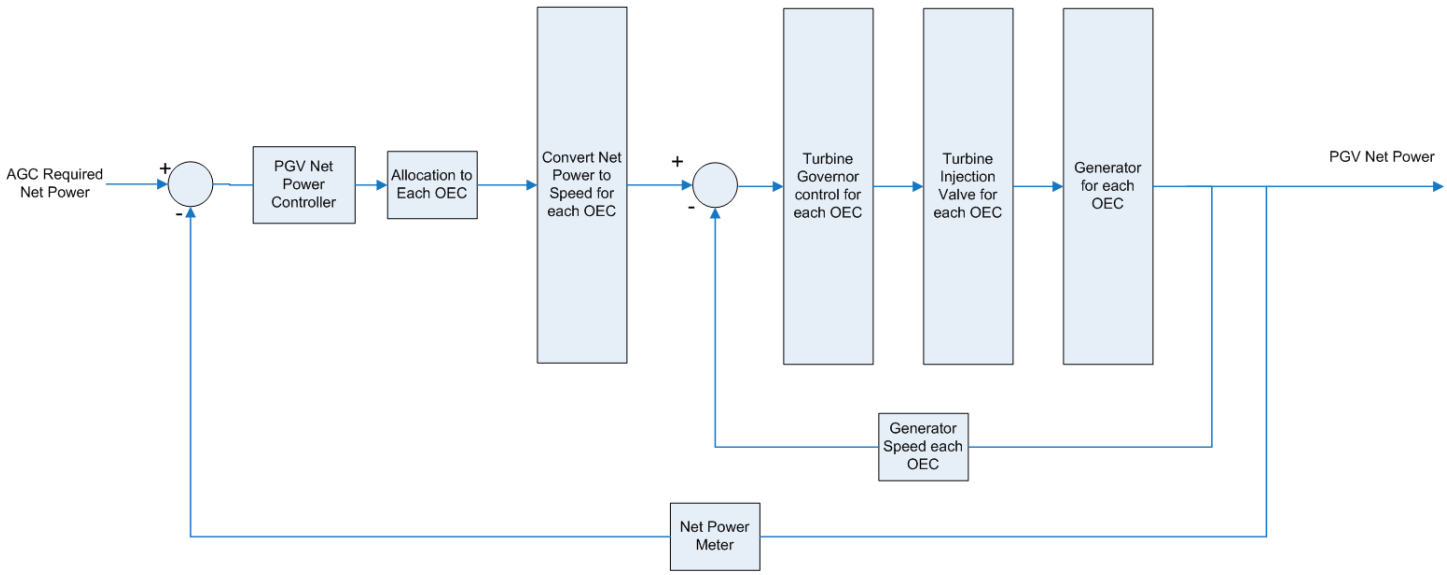

Figure 3. Control schematic for adjusting net power output to match required net power provided by the AGC. The PGV controller prioritizes and distributes speed set point signals to all OEC units at the facility.

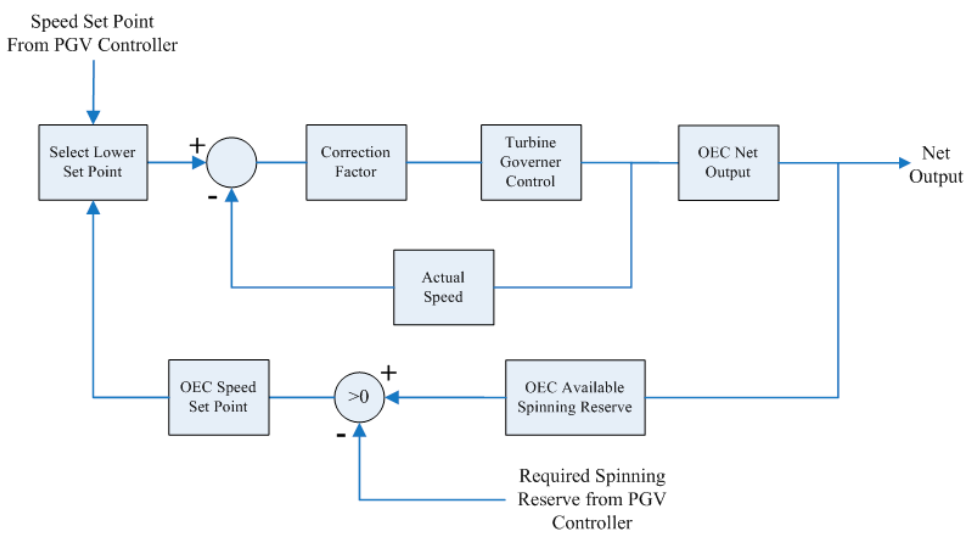

Figure 4. Control schematic for adjusting net power output of an OEC while maintaining both speed set point derived from the GC Net Power Required while also maintaining the required amount of spinning reserves.

control philosophy was chosen to allow power generation of any given unit to vary but not at the expense of the required spinning reserve. Therefore, the control mechanism limits power generation if available spinning reserve is less than required spinning reserve. The control scheme for maintenance of spinning reserve follows the simplified diagram in Figure 4.

The Finished Product

During 2012, PGV commenced commercial operation of the expansion project. This was achieved by extensive acceptance testing associated with all aspects of the PPA between Ormat and HELCO, proving the full dispatchability of the project.

While, especially here, the solution is simplified and summarized for understanding, the actual work involved was extremely detailed, elaborate, and challenging. In a project like this, as with many projects, the devil is in the details. For this project, there were a lot of details.

First, there was developing a geothermal technology that could operate both as base load and dispatchable. This did not only involve development of equipment (OECs) but also very involved work within the control of this equipment.

Then, there was advancing existing equipment, which had been operating for 20 years, to also operate as base load and dispatchable. This effort can be more challenging on both the equipment and control as new physical equipment may need to be made and older control systems, with minimal capabilities, need to be fully replaced.

Finally, the development of an overall control philosophy that can receive requests from AGC, and enable the whole PGV facility to respond accordingly, while staying within the operating limits of the equipment and the wellfield, was challenging. It's important to restate that there are 12 power units at the PGV facility, ten that have been operating at the site for over 20 years. While the power agreement between HELCO and PGV includes minimum base load output, the PGV facility is inherently fully dispatchable.In the end, it was the determination and commitment by Ormat that brought this solution to reality. The details in such a project were tremendous, and at times insurmountable, but the goal was worth the effort; the first fully dispatchable geothermal facility in the world. This new project not only increases the renewable energy capacity in Hawaii and decreases the dependency on fossil fuel sources, but ultimately proves that renewable resources and particularly geothermal can replace the fossil fuel-based energy production that is used today, both base load and dispatchable.

Figure 5. One of the expansion OECs at PGV that use geothermal brine for power generation and are fully dispatchable.

References

Hawaii Clean Energy Initiative, 2013. http://www.hawaiicleanenergyinitiative.org/

Hawaii Clean Energy Initiative, 2013. Hawaiian Electric Companies hit new high in renewable energy use in 2012. www.hawaiicleanenergyinitiative.org, April, 2013.

The Value of Geothermal Energy Generation Attributes:

Aspen Report to Ormat Technologies

Carl Linvill, John Candelaria and Catherine Elder

Aspen Environmental Group

February 2013

Executive Summary

The Public Utilities Regulatory Policies Act (PURPA) in 1978 established a market for geothermal energy that led to rapid growth of the industry through the 1980s and into the early 1990s. Geothermal energy generation became the largest non-hydro power source of renewable energy in California during this period. While PURPA was beneficial to the geothermal industry, the PURPA contracting mechanism led to some misconceptions that persist to this day. PURPA implemented a compensation mechanism that led geothermal developers to focus on geothermal project's base-load generation capabilities. Changing electric system needs and improvements in geothermal generation technology currently allow geothermal projects to be designed to meet the needs of today. For example, geothermal projects can ramp up and ramp down electricity generation output quickly so geothermal projects can provide flexibility and ancillary services to serve some of the vital needs confronting entities such as the California Independent System Operator (CAISO).

Unfortunately, geothermal energy is underutilized and under-procured today for two reasons. First, the misconception that geothermal energy can only provide base-load service is prevalent and utilities, regulators, system operators and even some geothermal developers have been slow to recognize the full suite of generation attributes that geothermal possesses. Second, renewable energy procurement processes have tended to compare renewable energy resource alternatives against one another on a cost per kilowatt-hour basis without considering the attributes that competing technologies offer or the full range of system costs that the competing technologies impose.

Most geothermal energy projects in operation today were developed to serve as base-load generation and serve today as base-load generation. Therefore it is not surprising that the myth that geothermal energy projects can only serve a base-load function persists. Aspen worked with Ormat Technologies, Inc. engineers to produce Appendix 1 to this report that seeks to dispel that myth. Appendix 1 shows that modern geothermal facilities can have all the benefits of base-load generation if one chooses to operate a project as base-load. However, unlike other base-load sources like coal fired and nuclear generation, geothermal generators can ramp generation output down very quickly and they can also resume full generation capacity very quickly. Appendix 1 further demonstrates that geothermal units need not be relegated to base-load operation exclusively. Geothermal generation can be built to

provide Ancillary Services and can serve as a flexible generation source. Contracting mechanisms could be envisioned to maximize the value of a geothermal generation project by tapping the project for its highest value use as system conditions change. Given the electricity system challenges the utility industry faces today, it is a pity that geothermal projects are underutilized and under-procured.

The procurement processes used in the western United States and the renewable energy project valuation methodologies utilized in those processes is the second reason that geothermal energy is underutilized and under-procured. The failure of geothermal energy projects to compete in recent renewable energy solicitations is partly due to an evaluation process that unduly focuses on the simple cost per kilowatt-hour of energy sales and unduly minimizes resource integration cost issues. While it should be acknowledged that geothermal projects have disadvantages relative to other technologies that explain some of the difficulty faced by the industry, the fact remains that geothermal projects have attributes that are currently ignored. Geothermal resources are currently at a disadvantage because:

- Geothermal resources have positive attributes that are not counted in their favor; and,
- Geothermal resources avoid costs incurred by several other renewable technologies that are not explicitly counted either in geothermal projects favor or against those competing technologies that impose extra costs.

Geothermal energy projects can provide base-load electricity services and they can also be built to provide flexible electricity services. Geothermal projects can actually be custom built to provide the services of greatest need to the procuring entity and thus geothermal projects can provide highest value of service tailored to the operating environment and operational needs of the utility or reliability organization. The fact that geothermal energy can be used predominantly as a base-load facility but can be called upon to provide high value services in times of critical need means that geothermal energy projects possess significant option value.

Geothermal projects also avoid system costs that some competing generation technologies impose. For example, as variable generation market penetration increases, variable generation resources will require additional infrastructure or additional flexible generation resources to ensure system reliability is maintained. While significant effort is underway to transition the electric system to a much more flexible and robust electric system so that the costs of integrating large quantities can be mitigated, the fact is that today the system is not flexible or robust enough to handle large penetrations of variable

generation without significant, incremental system expenses. Further, it should be noted that the need for a more robust and flexible system is partly driven by the transition toward high penetrations of variable generation. Therefore, from a procurement perspective, it seems fair that some version of "cost causers pay" is appropriate and the costs of transitioning the system should be reflected in the costs of those resources that are driving the need for system investments. The paper shows that avoided integration cost, avoided transmission cost and avoided gas system cost are each relevant in arriving at a robust value and cost comparison among renewable energy and conventional energy resources in competitive solicitation processes.

Geothermal energy is an underutilized and under-procured resource in western energy markets and ultimately consumers are paying extra for unbalanced generation portfolios. Giving the consumer the best value for her investment dollar will require that procurement processes be fixed. Fixing procurement will require two simple steps. First, the full value of all attributes offered by geothermal resources should be included in energy resource cost comparisons. Second, all of the costs avoided by geothermal projects should either be counted as an added value provided by geothermal projects or should be counted against projects that impose system costs.

Introduction

For the last three decades geothermal energy developers have focused on selling geothermal energy as a base-load product into renewable energy solicitations. The qualifying facility designation under PURPA (1978) created a market for base-load geothermal energy in the 1980s and into the 1990s through the Standard Offer #4 contracting opportunity. After a hiatus that lasted nearly a decade, Renewable Portfolio Standards (RPS) in California, Nevada and elsewhere in the western United States offered a new market for geothermal energy over the last decade. Geothermal energy generation projects enjoyed success in initial RPS solicitations but have faced difficulties competing against wind and solar projects in more recent solicitations.

Failure to compete in recent solicitations is partly due to an evaluation process endorsed by Public Utilities Commissions that unduly focuses on energy sales and unduly minimizes resource integration issues. Geothermal resources are at a disadvantage in these solicitations because geothermal resources have attributes and avoid costs that are not explicitly valued. The principal cost avoided by geothermal projects stem from the fact that geothermal generation is a resource that can deliver on a firm schedule and thus does not require additional reserve resources. In contrast, variable generation resources require additional flexible generation to ensure reliable delivery to meet a defined profile. Thus geothermal resources avoid the cost that a variable generation resource would require. The principal attributes that add value to some geothermal projects are the flexible dispatch and regulation capabilities that geothermal facilities possess in varying degrees based on the resource as well as the technology deployed at the facility. Flexible dispatch and regulation capabilities are becoming increasingly valuable as the proportion of load met by variable generation resources increases and the proportion of load served by base-load resources declines. These geothermal attributes have increasing value that should be recognized and compensated in RPS bid evaluations as well as in the resulting contracts.

In California the problems associated with acquiring renewable energy on a least cost per kWh basis are becoming manifest. Greater reliance upon intermittent energy sources is contributing to changes in aggregate system net demand as well as changes in the profile of available supply. The California Independent System Operator (CAISO) studies of system needs indicate that higher penetrations of solar will substantially reduce afternoon demand but will also create the need for generation facilities that

can rapidly ramp up in the early evening. In addition, greater penetrations of wind energy will lead to an increased demand for resources that can ramp up and ramp down as wind generation varies. At the same time, California is contemplating retiring more than 7,000 MW of generation in southern California over the next decade. California energy policy mandates Once–through-Cooling ("OTC") generation retirement and contemplates nuclear generation retirement as well.

Taken together, these California policy developments are leading to an excess demand for well-located generation resources that have flexible dispatch and regulation capabilities. The nature of the challenge is depicted in Figure 1 below which was recently produced by the CAISO using data from a 2020 High Load scenario. Note particularly the yellow line which reflects the large amount of solar PV assumed given the Governor's 12,000 MW of Distributed Generation goal. Also note the red line which shows the impact on the net demand for energy (gross demand for energy less projected DG generation) in the LA Basin of having large amounts of daytime peaking solar PV.

Figure 1: California ISO High Load Case for 2020

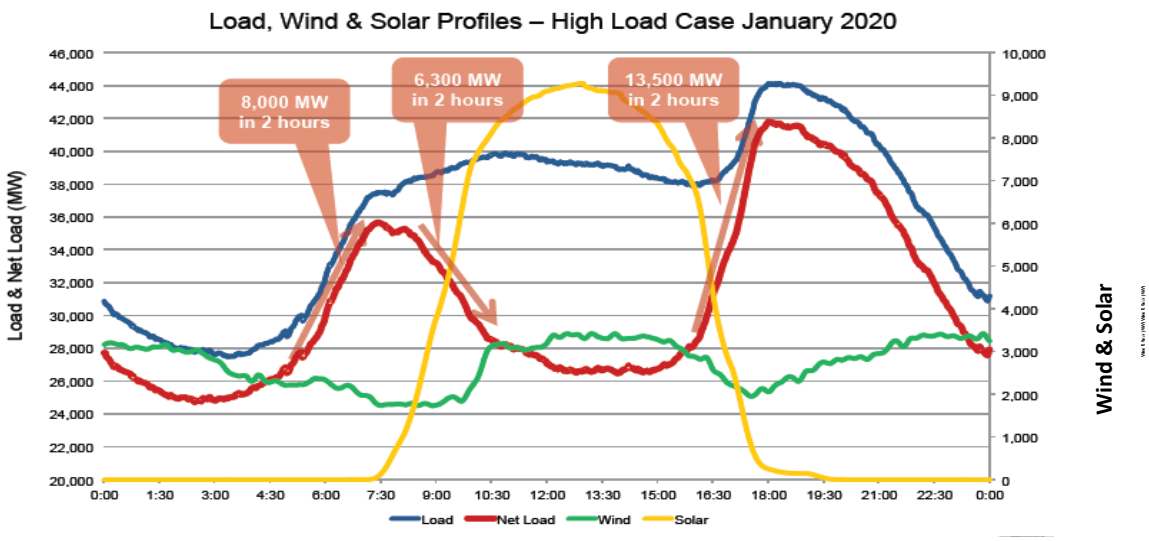

Rather than a typical daily peak, the existence of large amounts of solar PV produces bimodal peaks with a ramp down in the morning (6,300 MW in 2 hours) and a steep ramp up in the evening (13,500 MW in 2 hours). It is interesting to note that this bimodal net demand shape indicates increased value for geothermal projects in two respects. First, it approximates the natural shape of geothermal energy production in the summer and thus the Time of Day (TOD) factors which have worked against geothermal in the past will need to be adjusted as DG PV penetration increases. In fact, one could argue that the change in net load shape is predictable now, so the TOD factors should be updated now to reflect the projected time of day values since facilities procured today will face a new net load shape in 2020 and beyond. Second, the bimodal peak includes ramping and regulation requirements that will require flexible generation resources, and some geothermal resources may be able to contribute to meeting these new flexibility requirements. For example, if there is a shortage of fast ramping generation in the LA Basin then the market value of fast ramping resources could get quite high. Thus the value of holding a geothermal contract that allows the entity to vary use of the resource (for a price) from base-load to providing flexibility or ancillary services could be an "option value" premium that could enhance geothermal contract value relative to what the buyer would be willing to pay for a simple base-load resource. Demonstrating the fast ramping and ancillary service capabilities of geothermal generation to electricity sector decision makers in California and the West will be important and thus proving the technical merit of the operational attributes presented in Appendix I will be very important.

The Opportunity: Flexible Geothermal Generation Attributes Ascendant

The value of resources that are firm and flexible is increasing and should continue increasing as the proportion of load served by variable energy resource (VERs) increases over the next decade. In addition to the increase in VERs other sources of uncertainty are impinging upon the planning environment in California that will make firm and flexible resources more valuable. A list of these uncertainties is reprinted from the California Energy Commission's 2012 Integrated Energy Policy Report Update (October 2012, p. 35) below.

Table 1: California Energy Commission Key Planning Uncertainties

Table 4: Key Electricity Planning Uncertainties

Variable	Uncertainty Influencing Planning Assumptions
Demand	
Base demand forecast	• +/- 5 percent to reflect range of economic and demographic growth • Increased intensity of electricity use from process electrification • Increased electricity use and different load shapes from transportation electrification and climate change
Incremental energy efficiency	Impacts of programs not included in the base forecast but compatible with adopted energy efficiency goals
Customer-side generation (rooftop PV, CHP)	"Guesstimates" of energy and peak demand reduction from programs to encourage customer adoption
Price response from market-based tariffs	Assumptions whether/when CPUC can create such tariffs given SB 695 (Kehoe, Chapter 337, Statutes of 2009) and estimates of impacts
Supply	
Demand response programs	Range from existing program capabilities up to 10 percent of base peak demand. Estimates of automated demand response are 0.9 GW on a hot summer day and 0.18 GW on a cold winter night; with increased use in commercial and industrial facilities that could double to 2.07 GW and 0.421 GW, respectively.[48]
OTC power plant retirement	Distribution of retirement dates centered on official OTC compliance date for each steam plant
Other power plant retirement	Range of assumptions for retirement of other aging power plants
Conventional resource additions in the pipeline	Alternative scenarios using different assumptions about development milestones like signed/approved contracts, permits, and others
Utility-scale renewables needed to satisfy 2020 RPS target	Alternative scenarios of the mix of technology and locations emerging over time
Distributed generation	Increased uncertainty of load/supply at the bulk system level as less information is available to the system operator implies that the system operator will need to operate more conservatively or that improved communications will be needed.
Supply-side CHP	Alternative consequences for the QF settlement at the CPUC
Performance change for existing resources	Climate change effects including reduced efficiency of air-cooled facilities due to higher temperatures, changes in timing and amount of hydroelectric output, and increased danger of wildfires near critical transmission infrastructure; catastrophic outages like SONGS
Imports/Exports	Potential for fewer imports as California becomes more self-sufficient; availability of lower-cost renewables in other parts of the Western interconnection
Other	Effects of cap-and-trade program

Source: California Energy Commission

Containing the cost of reaching high levels of renewable penetration is a central policy issue as slow growth drags on and geothermal resources can save some of the expense on new fossil resources relative to intermittent resources. Geothermal projects that can provide firm base-load capacity as well as flexibility should increase in value. The procurement process is being actively re-considered and fixing the all-source procurement processes (RAM and utility scale procurements) is the best opportunity to obtain a secure revenue stream. However the preferred solution is not the only solution. Other contracting mechanisms are also possible with the emergence of Ancillary Services and REC markets. Whatever the contracting mechanism, the driving force behind the market opportunities are the underlying values of attributes that have not been fully accounted for in procurement processes, to date.

Geothermal Attributes and the Sources of Geothermal Project Value

There is a wide range of attributes offered by geothermal projects that can be used to make a case for the full value of geothermal projects. Some attributes like the availability of a project to provide ancillary services can be quantified and can be used to justify a premium price bid. The financial value of some other attributes like the longstanding track record of geothermal resources to reliably produce the output contracted cannot be readily quantified but might be used to justify the viability of a project. Still other attributes can be used as plus factors that cannot be explicitly quantified but can be used to differentiate geothermal projects from competing renewable energy projects. The focus of this paper is to identify and discuss those factors that can be quantified and can be communicated to help justify the price bid. Some of the factors are product values that geothermal projects can deliver (Energy, Capacity, Flexibility and Ancillary Services), and some of these quantifiable factors are avoided costs that represent cost advantages relative to competing renewable energy projects (avoided integration costs, avoided transmission cost, and avoided gas transportation and storage cost). The material included in this section is presented with more technical detail in Appendices I and II.

Energy & Capacity

Energy provided by geothermal resources will continue to be a valued asset by utilities, but the value that geothermal projects can expect from the energy attribute will decline relative to the other attributes that geothermal can provide. While the base-load characteristics of geothermal resources are highly desirable, utilities are currently procuring large amounts of wind and solar energy because tax breaks, subsidies, policy biases, economies of scale and technological advances are creating the opportunity for wind and solar projects to bid energy in at very low prices. From a competitive

standpoint, the energy costs for wind and solar resources are expected to continue to decline in the coming decade so the price paid for energy attribute of geothermal projects will shrink in the coming decade. The trend may be interrupted with the cessation of the wind production tax credit in 2014 and the cessation of the solar investment tax credit in 2016, and the energy attribute could experience a bump up for a few years from 2016 to 2020 or so, but the long term trend toward continued technological improvements in solar energy generation mean that the energy attribute, while still a valuable asset, will decline gradually. The value of the geothermal energy attribute will become more valuable if every renewable project is required to show all the costs that it will impose (integration, transmission, and gas system costs). If these costs are added to the energy cost of variable resources then the value of the geothermal energy attribute could stabilize at reasonable levels. We will go into more detail about these costs later in this document.

However, at the same time that increasing VER penetration drives down the price paid for the geothermal energy attribute, the increased penetration will drive up the value of the geothermal capacity and flexibility attributes. Adding renewable resources to achieve the 33% RPS energy standard will definitely affect how and when existing generation will be operated. Since consumer demand for energy in California is not projected to increase by 33% by 2020, meeting the State 33% RPS by 2020 will mean the addition of large quantities of renewable resources will dramatically change the energy generation profile in many hours of the year. At the present time, utilities have a disincentive to use renewable energy resources as capacity because doing so conflicts with their primary goal of complying with the State mandated RPS which is an energy-based standard. However, recent pressure from regulators to “contain the cost” of RPS compliance and recent pressure from system operators like the California ISO to attract flexible resources to compensate for increasing levels of VERs are acting together to build a demand for geothermal capacity, flexibility and ancillary service values. The pressure has created an opportunity for gas, renewable and demand response resources that can assist system reliability issues created by high levels of VERs. As penetration levels for VERs increase, the value of ancillary services will increase AND the avoided integration cost will become increasingly valuable.

The challenge for geothermal developers is to extract enough value from the capacity, ancillary service and flexibility attributes to compensate for the decline in energy attribute revenues. The first step in extracting that value is to communicate clearly to public and utility decision makers the range of physical operational attributes that geothermal plants can have and this is why Appendix I is so important.

Ancillary Services

Renewable energy resources such as solar and wind depend on energy resources that are variable and thus have generation output profiles that require ramp rates both up and down that will stress existing flexible resources as penetration levels increase and during light loading conditions. Figure 1 on page 3 exemplifies the challenges created by VERs. While it is well known that the geothermal energy resource allows geothermal generation projects to operate as base-load resources, it is not well-understood that advances in geothermal technology now allow geothermal generation to be not only a firm generation resource, but also an exceptionally flexible generation resource. Geothermal projects can maintain a constant output and have high capacity factors, but some geothermal projects can also ramp up and down very quickly, and can provide regulation services as well as provide voltage support. Appendix I describes these technical features of geothermal projects in more detail

Building a geothermal project so that it can offer a full suite of flexibility and other ancillary services does not impose a "cost penalty" on the cost of using the resource as a base-load resource. That is the resource can operate just as efficiently in base-load service mode if it has the flexibility capabilities, and the capital cost increment required to enable these flexible dispatch attributes is very small. While some additional maintenance would be required for a facility operated in a more flexible manner, the cost of the maintenance is also very low. More information on the operational capabilities of geothermal generation projects is provided in Appendix I.

Specific services that geothermal resources can provide include regulation, load following or energy imbalance, spinning reserve, non-spinning reserve, replacement or supplemental reserve. In fact, 8 MWs of geothermal capacity at the Puna Geothermal Venture facility in Hawaii (shown on the cover of this report) is used only to provide ancillary services for grid support. This unit is currently on Automatic Grid Control (AGC) and is used as a regulating unit. It provides identical services as oil fired resources on the Hawaiian island[1]. Furthermore, geothermal resources are coupled with the electric system and provide system inertia and frequency response during light loading conditions. It is notable that geothermal facilities can provide very fast ramping resources and the number of fossil facilities available to offer these very fast services is limited with not all peaking units able to provide this service.

Other types of renewable resources can also provide limited ancillary services to support VERs. However, with the exception of solar thermal with storage (an expensive technology), most types of

[1] Presentation by Paul Spielman, Ormat Technologies, Inc. "Puna Geothermal Venture 8MW Expansion, 2011

renewable resources have limited ability to support VERs. As already mentioned, the need for additional flexibility required to support VERs is caused by the addition of wind and solar PV to the electric system. These are the resources that are ramping up and down and the cause for investigating market changes and additional resource needs. Wind and solar resources can't provide ancillary services if the wind is not blowing and the sun is not shining. In addition, these resources are synchronized to the grid electronically and for most standard installations provide no inertia during light loading or low frequency events in the electric system.

Current values for ancillary services can be found in a number of places where markets are operated. In places like Nevada where no market is present, the value of ancillary services is known by the system operator (NV Energy) but is not known by others. Independent System Operators like CAISO, PJM and ERCOT have markets for ancillary services and values for these services can readily be obtained. In addition, most open access transmission tariffs include values for the various ancillary services that are offered by the balancing authority. The CAISO's latest Market Performance Metric Catalog[2] includes day ahead and real time average prices for ancillary services that are offered. Average Real-Time prices for July and August 2012 show that for ancillary services offered (regulation up, regulation down, spinning and non-spinning reserves) regulation up and down are most highly valued ancillary services products. In addition, ancillary service prices were below $10/ MW most of the time with occasional spikes as high as $46/ MW.

[2] California ISO, Market Performance Metric Catalog, Version 1.25, August, 2012http://www.caiso.com/Documents/MarketPerformanceReport-MetaDocument_August.pdf

Figure 2: California ISO Real Time Ancillary Service Prices in August, 2012

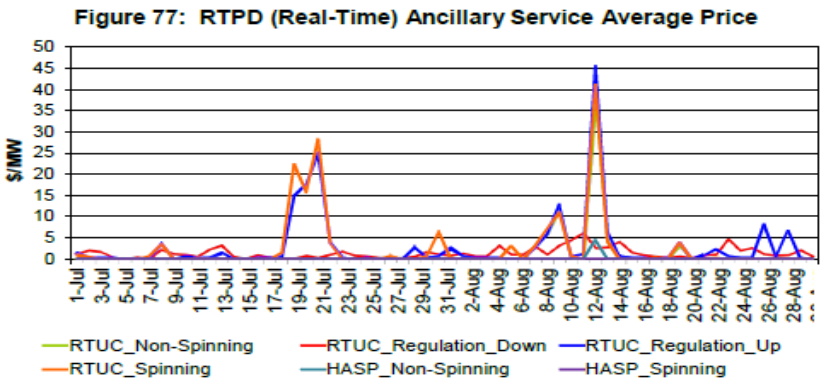

Current ancillary service values should be put in perspective. Figure 3 below shows that in economically robust times, ancillary service values were substantially higher. Furthermore, renewable energy penetration levels are relatively low today compared to where they will be in the future. It is likely that future ancillary service prices will be higher and perhaps quite volatile, but Aspen interviews indicate that no forecasting service produces data for future ancillary service prices more than one or two years out because so many uncertainties impinge on price determination under dramatically changing grid conditions. However, one should expect that the range of prices seen historically represents a lower limit on the range of prices one should expect in the future given the dramatic changes in system operations that are coming. In addition, the fact that these prices are so uncertain that forecasters do not wish to offer insight indicates that holding an option contract for future ancillary services has value. If there is a possibility that prices will spike in the future as they have in the past, then the option value could be relatively high. Since geothermal projects can be operated flexibly and can offer a range of ancillary services, a geothermal project contract can be viewed as a contract with option value. For example, if the geothermal contract is negotiated to provide the buyer with some operational flexibility then that buyer has the option of dispatching the unit as a base-load resource or dispatching part of the facility as an ancillary service. This option has value because the price of some ancillary services may become very high and thus the option to deviate from base load operation to provide higher value service is very attractive. It should be noted that ancillary services will continue to have high values during certain days and certain time periods and relatively low prices during most periods.

Figure 3: California ISO Ancillary Service Prices, 2006 to 2012

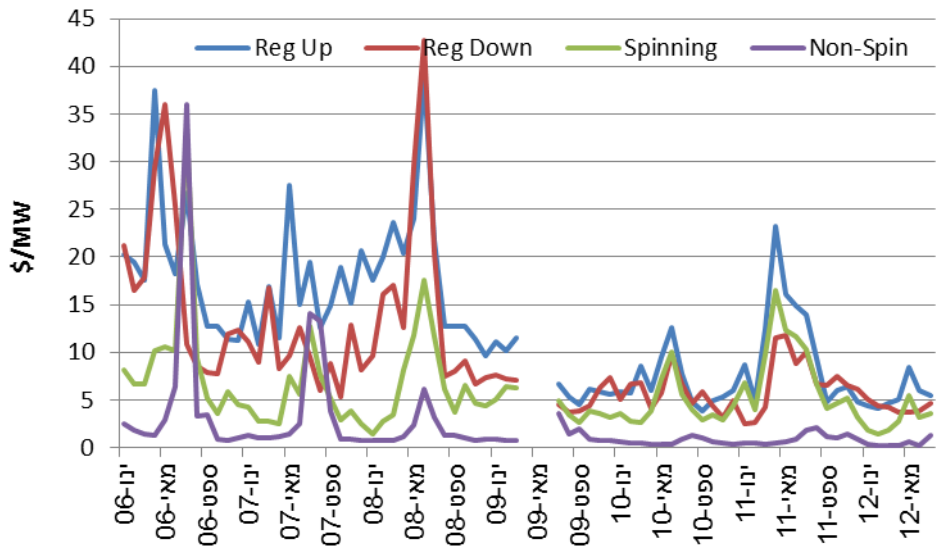

Avoided Integration Cost

All renewable resources have integration costs. The most commonly known integration costs include transmission upgrade and ancillary service procurement costs. However, integration costs can vary depending on the type, penetration levels and supporting infrastructure of the resources that are selected. A fair cost comparison of renewable energy resources would include the total integration cost of each resource. Nevertheless, not all integration costs are currently included in bids for renewable resources. In fact, the CPUC, in decision D. 11-04-030, mandated that a "zero" adder for integration costs be used in evaluating bids in its 2011 RPS Solicitation. This creates an unfair advantage for some resource types as they receive a free pass for costs they incur at the expense of other resource types and, ratepayers become responsible for costs that exceed the bid price of the resource.

A number of studies have been completed and there are efforts underway to calculate the cost of integrating various penetration levels of variable energy resources into the electric system. While this effort is ongoing due to the complexity and disagreement over what assumptions to use, a significant amount of time, effort and expense will be consumed to accommodate integration of variable energy renewable resources. Listed in the table below are the integration costs calculated by various western utilities.

Table 2: Integration Cost Study Results

Integration Studies				
Company/ Organization	**Type of Study**	**Penetration Level**	**Integration Cost**	**Study Date**
			$/MWh	
PGE	Wind	850 MW	11.04	2011
PacifiCorp	Wind	1372 MW	8.85	2010
PacifiCorp	Wind	1833 MW	9.7	2010
APS	Wind	10%	4.08	2007
NV Energy	Solar PV	150 MW	3	2011
NV Energy	Solar PV	1042	8	2011
Excel	Wind	2000	3.4	2011
PG&E	Wind	1000	2.5	2009
PG&E	Wind	5000	13	2009

It should be noted that some sources of integration cost are typically excluded from integration cost studies. For example, many items are typically excluded from integration cost studies and these changes will incur a cost for ratepayers:

- Substantial increase in balancing area cooperation or consolidation, real or virtual;
- Increase the use of sub-hourly scheduling for generation and interchanges;
- Increased use of transmission;
- Implementation of coordinated commitment and economic dispatch of generation over wider regions;
- Incorporate wind and solar forecasts in unit commitment and grid operations;

- Increase the flexibility of dispatchable generation where appropriate (e.g., reduce minimum generation levels, increase ramp rates, reduce start/stop costs or minimum down time);
- Commit additional operating reserves as appropriate;
- Build transmission as appropriate to accommodate renewable energy expansion;
- Target new or existing demand response programs (load participation) to accommodate increased variability and uncertainty;
- Require wind plants to provide down reserves;
- Wear and tear associated with using conventional resources for cycling;
- Opportunity cost of transmission; and,
- Gas market and infrastructure cost to support using conventional resources to provide ancillary services for VERs.

Integration of geothermal resources into the electric system does not require many of the integration measures listed above, ultimately avoiding the costs associated with these measures that are paid by ratepayers. Viewed in light of the many measures not quantified in the integration cost estimates shown in Table 1, the cost estimates shown are clearly lower bound estimates.

Furthermore, geothermal resources can be used to support the addition of VERs into the electric system. Including geothermal resources in the portfolio of renewable resources reduces the need to build additional fossil generation facilities and thus decreases the cost associated with procuring incremental gas fired resources to ensure reliability.

Avoided Transmission Cost

Another cost that seems to be overlooked in integration studies is the opportunity cost of transmission. Each type of renewable resource has different transmission capacity requirements for delivery of a specified amount of energy. For example, wind capacity factors are typically in the 35% range, Solar PV in the 25% range and geothermal in the 85% range. Therefore it takes about three times the transmission capacity to deliver the same amount of energy from a solar PV resource than from a geothermal resource. Unfortunately transmission corridors and transmission capacity are scarce and

new transmission capacity is expensive to construct. In the future, the cost to develop transmission projects will increase and it will become much more difficult to get permits to construct transmission lines. While the cost of transmission to support renewable energy resources is included in the bid price of a resource, the opportunity cost of relinquishing that transmission for a specific resource is typically not considered. For example, in Nevada, NV Energy supported the approval of its proposed ON Line transmission project by identifying the benefits attributed to the line. These benefits included: Dispatch Optionality, Load Diversity, Reduction in Planning Reserve Margin Requirements, Reduction in Contingency Reserve Obligation, Optimization of Gas Transportation Assets; Optimization of Regional Market Purchases, System Reliability Benefits, Protection Against Conventional Fuel Source Uncertainty, and Protection Against Carbon and Greenhouse Gas Uncertainty[3]. However, for delivery of Nevada-based renewable resources to load centers in the state, NV Energy's RFP procurement process ignores these sources of value. A renewable resource that provides some of these same benefits that NV Energy touted as a benefit of the ON Line does not receive any valuation credit for providing that service.

Avoided Gas System Cost

One of the ancillary services required more often with higher penetration levels of VERs in the portfolio will be load following and/or its inverse, resource following. The conventional expectation is that dispatchers will rely on natural gas-fired units to follow change in available renewable output. Resource following using gas-fired generation, however, will turn out to be harder and more costly for gas-fired units because the natural gas transmission and distribution infrastructure and market rules are not configured to support short-notice changes in gas requirements or highly variable gas requirements. The following paragraphs provide further explanation:

- Gas moves slowly. Therefore gas deliveries are scheduled many hours in advance. Gas scheduling timeframes to support resource following is inconsistent with current scheduling practices which makes securing gas for this purpose more difficult and more costly.
- Gas utility and pipeline tariff rules require users to burn the quantity of gas delivered (or pay a penalty). They also require delivery of the gas in even hourly quantities. When a shipper burns gas that they did not schedule, they are taking someone else's gas or gas the utility leaves in the lines in order to preserve operating pressures. If too many users fail to match the quantity burned with the quantity delivered, the pipeline or utility will impose higher penalties until compliance is achieved,

[3] Reference NVE IRP

or, it may call a system emergency in order to protect operating pressures. A system emergency could result in curtailment of gas deliveries to customers taking more gas than they scheduled, likely large customers who are generators.

- Owners of both gas-fired base-load and peaking units often do not hold firm gas transportation rights. Peakers, in particular, are understandably reluctant to commit to annual charges to reserve capacity 365/24/7 that they expected to use in only a handful of hours during the year. Even if generators do commit, state end-use priority rules and cost allocation policy make delivery of gas to electricity generators lower priority than deliveries to other customers.
- Gas requirements for ramp up/ramp down patterns to support VERs are inconsistent with gas utility and pipeline tariff provisions requiring ratable hourly takes or notice of need for ramp changes does not coincide with windows to nominate gas.
- The existing gas infrastructure works most of the time today because ramp has been predictable and VER penetration levels are low. In addition, California gas utilities have excess capacity and large amounts of underground gas storage. Larger, more frequent and sudden ramps will be harder to accommodate and likely result in more penalties for gas nomination changes or taking gas without notice.
- Much of a utility's gas fleet is not capable of providing ancillary services that will be most desired with high penetration levels of VERs. PG&E notes that more than 50% of the existing [presumably gas-fired] fleet requires 5 or more hours to start. For these resources to be effective for supporting VERs they would have to continually be placed in service hours before they are needed. This start-up frequency would increase the overall maintenance cost for these units.
- Operating gas-fired peaking units for reliability purposes requires specific natural gas transportation capacity arrangements. Unfortunately, these specific transportation capacity arrangements are quite different from gas peaking units that are only operated during the summer. Gas peaking units that only operate during the summer can use spare gas transport capacity because summer is an off-peak season for gas transportation capacity.

Appendix I: Physical Operating Capabilities of Geothermal Generation

General Description of the Organic Rankine Cycle (ORC)

Hot geothermal fluid (red and orange lines in the diagram below) is pumped from the ground. It passes through the vaporizer and preheater heat exchangers and cools down as it transfers heat to the motive fluid (light green lines). The cooled geothermal fluid is then pumped back into the fluid reservoir. In the motive fluid cycle (light green lines), the motive fluid absorbs heat from the geothermal fluid and vaporizes. It is then injected into the turbine and expands. This expansion rotates the turbine, which is coupled to the generator, ultimately producing electric power. The motive fluid from the turbine outlet is then cooled in the air cooler and condenses to liquid. It is then pumped back to the heat exchangers to absorb new heat from the heat source and begins another cycle. The turbine bypass valve located on the bypass line is used when partial load is required in Flexible Operation Mode (see below, paragraph 2) and to relieve pressure from the vaporizer as a protective measure.

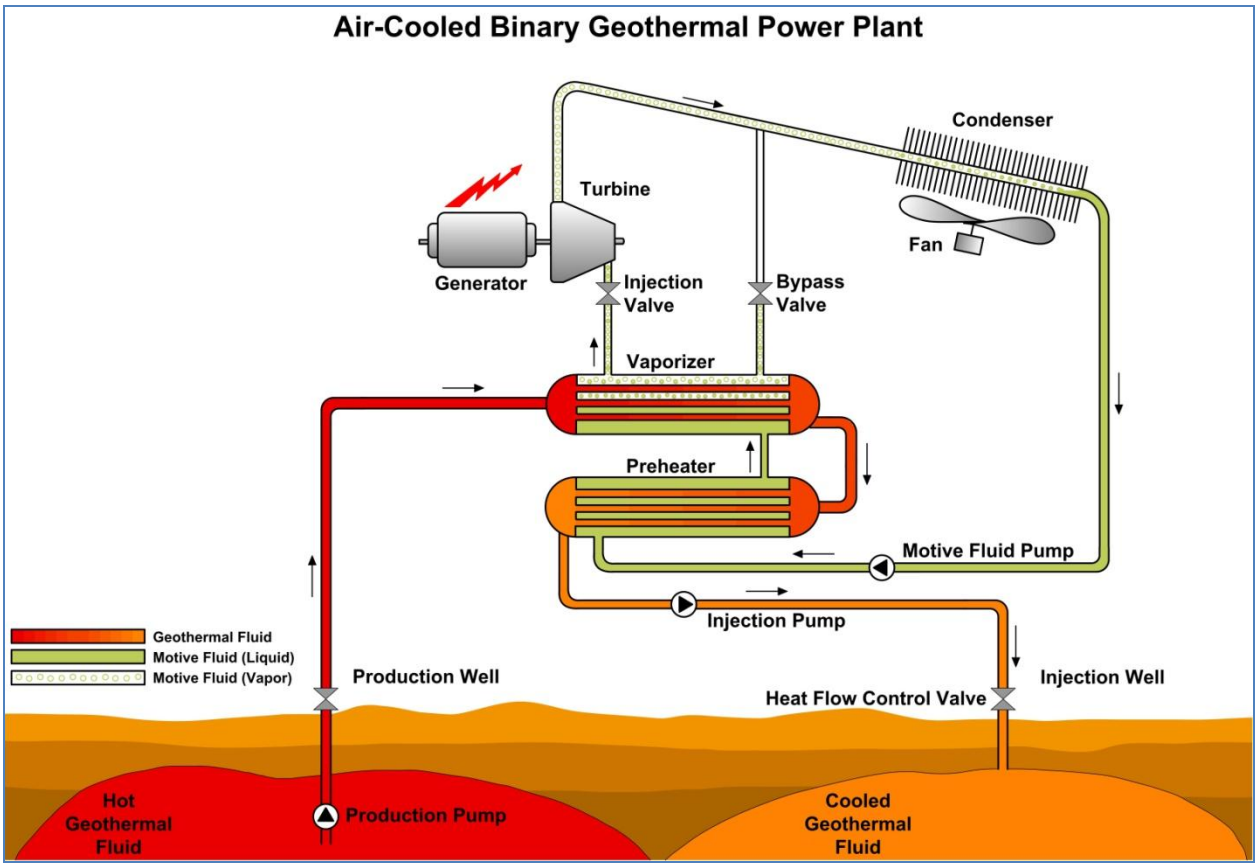

1. Base-load Operation Mode

In most applications, geothermal resources operate as base-load units and provide a constant level of power. In this mode, the well field is at full production and the injection valve, which regulates vapor flow to the turbine, is fully open. Power level is controlled by the heat flow control valve which regulates the flow of hot geothermal fluid through the system and directly affects the vaporizer pressure, turbine power, and electrical power.

2. Flexible Operation Mode

Flexible operation mode is used when flexibility and ancillary services such as load following, droop response and quick ramp rates are required. In this mode, the well field remains at full production and the geothermal resource is capable of reaching maximum or minimum power. The injection valve setting is adjustable to allow a very quick response to changing power demands and/or grid frequency changes.

Flexible operation mode highlights the unique attributes of geothermal power, mainly the lack of fuel cost. This firmly flexible characteristic keeps fuel supply constant while altering electrical power output, which is not economical with other energy alternatives.

After the upfront capital investment for plant construction, operational costs are constant and independent of produced power because there are no fuel expenses, as the "fuel" is hot geothermal fluid that can be reheated and reused. For this reason, nominal flow of hot fluid can be circulated in the system, even when only partial power is required, without paying extra money for the unused geothermal fluid (a.k.a. fuel). With these investments additional power is available for immediate use.

Physical Operating Capabilities of a Geothermal Power Plant

Geothermal power plants are typically operated as base-load resources. They produce power at high capacity factors and require much less transmission capacity to deliver the same amount of energy as other types of renewable resources. While base-load operation is typical, geothermal generation resources can also be operated in flexible operation mode when necessary and can provide a number of ancillary services including:

1. Real Power Regulation
   - A geothermal power plant can be equipped with the telemetry and controls required for Automatic Governor Control (AGC) operation. With predetermined unloaded capacity, it can also respond to upward and downward regulation signals.
   - Furthermore, it can also contribute inertia for system stability.
     The inertia constant of a typical 20 MW turbo-generator is 1.75sec.
     By adding a flywheel to the turbo-generator the inertia constant can be raised to 3.5sec.

     Case #1 without flywheel, inertia constant is H=1.76 sec:

Generator AMS1120LD by ABB:
MVA Rating = 25 MVA (=S_{base})
Inertias: I_{turb} = 2*240kgm^2 ; I_{gen} = 1995kgm^2 ; I_{total} = 2475kgm^2
Inertia Constant:
H=5.483e-9·I·n_{rpm}^2/S_{base}
H=5.483e-9·2475·1800^2/25= 1.76 [kW·sec/kVA]
H=1.76 [sec]

Case #2 with flywheel, inertia constant is H=3.4 sec:

Inertias: I_{turb} = 2*240kgm2 ; I_{gen} = 1995kgm2 ; $I_{flywheel}$ = 2310 kgm2 ; I_{total} = 4785kgm2
Inertia Constant:
H=5.483e-9·I·nrpm2/Sbase
H=5.483e-9·4785·1800^2/25 = 3.4 [kW·sec/kVA]
H=3.4 [sec]

Smaller units (10 MW) can have even higher inertia constants - up to H=5 sec.

2. Dispatchability
   - A geothermal plant can be dispatched by the balancing authority via automatic governor control.
   - It also has the capability to operate in Load Following mode .

3. Voltage and Reactive Power Regulation
   - A geothermal plant has the capability to work in Automatic Voltage Regulation (AVR) mode and can automatically adjust (produce or consume) Reactive Power (VARs) to provide voltage support.
     A Typical 20 MW synchronous generator can produce or consume up to 15 MVAR.
   - It can also be subjected to generator voltage regulation by the balancing authority through a remote signal.

4. Ramp Up and Down
   - A geothermal plant can ramp up and down very quickly. It can be ramped up and down multiple times per day to a minimum of 10% of nominal power and up to 100% of nominal output power. The normal ramp rate for dispatch (by heat source valve) is 15% of nominal power per minute. The ramp rate for dispatch in Flexible Operation Mode is 30% of nominal power per minute.
   - For comparison, gas turbines usually kept warm and rotating at minimum power for use as available power resource for the grid. A new type of "flexible" gas turbines GE LM2500 or GE LMS100 can be ignited and raised to full power within 10 minutes (according to GE

Power - Aeroderivative Gas Turbines publications). That means that on average, they ramp up 10% of their nominal power per minute. As mentioned above, geothermal ORC can do 15% as normal dispatch rate, and 30% in Flexible Operation Mode, and that without burning any fuel for stand-by operation.

5. Under / Over Voltage Ride-Through
   - A geothermal power plant complies with the NERC "PRC-024-1" standard - "Generator Performance during Frequency and Voltage Excursions" - and has the capability to remain on-line during grid disturbances. This allows the plant to provide voltage support during the disturbances thereby improving the ability of the utility system to ride-through the disturbance.

6. Under / Over Frequency Ride-Through
   - A geothermal plant can operate under Governor Automatic Droop Response as described in Bullet 1 (Real Power Regulation), allowing the geothermal plant to support the grid frequency during disturbance (up to ±5% of nominal frequency) thereby improving the ability of the utility system to ride-through the disturbance.

Appendix II: Description of Quantifiable Attributes

Introduction

As the electricity sector in the West achieves higher levels of renewable penetration, market and regulatory participants are realizing the need to quantify integration costs, transmission costs and gas system investment costs associated with portfolios heavy in variable energy resources (VER). Market and regulatory participants also recognize that heavy VER portfolios will require increased amounts of flexible resources that can provide the increased ancillary services required to support those renewables.

Integration studies, to date, have focused on transmission and flexible capacity requirements but little progress has been made in California toward assigning integration costs to renewable energy alternatives by type of resource. Industry participants and regulators in California still have not agreed on methodologies to quantify integration costs. In fact, the California Public Utilities Commission does not allow inclusion of integration costs in the evaluation of bids submitted by renewable energy developers into California's renewable solicitation process. In addition, heavy VER portfolios will require more gas system investment if gas resources are the selected "flexible resource," as well as more transmission system investment due to the lower capacity factors of wind and utility scale solar resources.

Failing to include integration costs, avoided gas system costs, avoided transmission costs and the value of ancillary service attributes leads to biased procurement comparisons. Geothermal resources in particular are undervalued because they have very low integration costs, zero gas system needs, low transmission capacity needs (due to a high capacity factor) and offer significant ancillary services. Including integration costs and appropriately valuing ancillary service attributes will provide California with a renewable portfolio in which base-load renewables can support intermittent renewables and further reduce the West's need to rely on conventional fossil resources.

Efforts to Value Ancillary Service Attributes and Include Integration Cost

Regulators, utilities, system operators and national labs in the western states are assessing ancillary service and renewable energy integration cost issues in a variety of ways:

- In R.11-05-005, the CPUC is considering revisions to its Least Cost Best Fit (LCBF) formula for calculating the net market value of renewable resource bids submitted in the renewable energy solicitations. The April 5, 2012 Assigned Commissioner's Ruling in this docket asked for comment on a revised LCBF formula that would include integration costs and ancillary services.
- In R.12-03-014 (Track III), the CPUC is scheduled to address flexible resource procurement and contract policies.
- The California Independent System Operator (CAISO) has explored integration costs and identified the need for more flexible resources to support higher penetration levels of VER and is currently investigating flexible ramping products for VERs in a stakeholder process.
- Portland General Electric, Pacific Gas & Electric, PacifiCorp, Xcel (wind), NV Energy (solar), and APS have proposed integration cost adders.
- NREL completed the Western Wind and Solar Integration Study (2008) and found that 35% renewable energy penetration can only be operationally accommodated in the West if a number of system enhancements are implemented. Among the enhancements is investment in more flexible generation resources.

As regulators consider the need to add flexible resources to support the increased use of variable energy resources and seek ways to minimize the costs, they should consider how renewable resources such as geothermal can play a role. Geothermal provides firmly flexible services while reducing total resource procurement costs and allowing base-load renewables to play a role in backing up intermittent renewables, we can avoid reliance on fossil resources to provide these ancillary services.

Integration Costs

All renewable resources impose integration costs. The most common integration costs include those for transmission upgrades and ancillary services. However, integration costs vary depending on the type, penetration levels and supporting infrastructure of the resources that are selected. A fair cost comparison of renewable energy resources would include the total integration cost of each resource. Nevertheless, not all integration costs are currently included in bids for renewable resources. In fact, the CPUC, in decision D. 11-04-030, mandated that a "zero" adder for integration costs be used in

evaluating bids in its 2011 RPS Solicitation. This creates an unfair advantage for some resource types as they receive a free pass for costs they cause at the expense of other resource types; ratepayers become responsible for costs that exceed the bid price of the resource. It appears that the CPUC may be changing its policy as it considers whether to include an integration cost component in the Least Cost Best Fit Formula used in the RPS Procurement process in Docket R1105005. In the same docket, PG&E indicated that it intended to take action:

> "In the 2012 RPS Solicitation, PG&E plans to include an explicit adjustment for integration cost. This adjustment for integration cost is intended to account for the increased costs of dispatching additional generators and procuring sufficient ancillary services from flexible resources to integrate an increased amount of renewable generation into the grid …
>
> For purposes of the 2012 RPS solicitation, PG&E proposes to use an integration cost adder of $7.50/MWh (in 2008 dollars), the same value for integration cost as used in the 2010 LTPP proceeding. The integration cost adder will be applied to resources that are considered intermittent, although resources with some reduced levels of intermittency may be subject to lower integration cost adders, as determined on a case-by-case basis."

The CPUC decided in November that PG&E would not be permitted to include an integration cost in the 2012 solicitation, so the PG&E proposal is moot. It should be noted that the integration cost adder used by PG&E would have only applied to intermittent resources. In fact, most renewable integration studies that have been undertaken address the cost of including only variable energy resources and not base-load resources, like geothermal, into the electric system.

What studies have been completed regarding integration cost?

A number of studies have been completed and there are efforts underway to calculate the cost of integrating various penetration levels of variable energy resources into the electric system. While this effort is ongoing due to the complexity and disagreement over what assumptions to use, a significant amount of time, effort and expense will be consumed to accommodate integration of variable energy renewable resources. The National Renewable Energy Laboratory's Wind and Solar Integration Study listed the following items as necessary to support higher 30% wind and 5% solar penetration in the WestConnect footprint:

- Substantial increase in balancing area cooperation or consolidation, real or virtual;

- Increase the use of sub-hourly scheduling for generation and interchanges;
- Increase use of transmission;
- Enable coordinated commitment and economic dispatch of generation over wider regions;
- Incorporate wind and solar forecasts in unit commitment and grid operations;
- Increase the flexibility of dispatchable generation where appropriate (e.g., reduce minimum generation levels, increase ramp rates, reduce start/stop costs or minimize down time);
- Commit additional operating reserves as appropriate;
- Build transmission as appropriate to accommodate renewable energy expansion;
- Target new or existing demand response programs (load participation) to accommodate increased variability and uncertainty; and,
- Require wind plants to provide down reserves.

Many of these items will cause increases in rates and, unless policy regarding integration costs change, won't be part of the valuation process of renewable resource options. Additional costs may be incurred as a by-product of implementing the items on the list. Examples include the cost to accommodate use of conventional gas-fired resources to provide ancillary services and the increased wear and tear associated with using conventional resources to support VERs. It should further be noted that the list is not a comprehensive list of all measures that will be necessary.

Many of the utilities in the West have attempted to calculate integration costs for VERs into their electric system. For example, Portland General Electric (PGE) in its 2011 Wind Integration Study Phase II concluded that:

"The results of the study indicate that PGE's estimated self-integration costs are $11.04 per MWh and within the range calculated by other utilities in the region. Specific model assumptions are detailed below but, in short, reflect a potential 2014 state in which PGE seeks to integrate up to 850 MW of wind using existing PGE resources and associated operating limitations. This is intended to set a baseline from

which subsequent remediation actions can be assessed. As the supply of variable resources and associated demand for flexible resources increases over time, subsequent phases of the Wind Integration Study can assess these changes."

Further, Pacific Gas & Electric's (PG&E) Renewable Integration calculator June 18, 2009 webinar sponsored by the WIRAB and CREPC showed the sample wind variable and fixed integration costs for wind based on a 1000 to 5000 MW penetration level varied from a little less than $2.5/MWh to approximately $13/MWh. Integration costs for other utilities that have completed studies are included in the table A1.

Table A1: Integration Studies

Integration Studies				
Company/ Organization	**Type of Study**	**Penetration Level**	**Integration Cost**	**Study Date**
			($/MWh)	
PGE	Wind	850 MW	11.04	2011
PacifiCorp	Wind	1372 MW	8.85	2010
PacifiCorp	Wind	1833 MW	9.7	2010
APS	Wind	10%	4.08	2007
NV Energy	Solar PV	150 MW	3	2011
NV Energy	Solar PV	1042	8	2011
Excel	Wind	2000	3.4	2011
PG&E	Wind	1000	2.5	2009
PG&E	Wind	5000	13	2009

What cost factors are typically addressed in integration costs studies?

Integration studies are performed at a micro level for specific resources and at the macro level for higher penetration levels of renewable energy resources that are developed. At the micro level, specific resources have small ancillary service requirements and integration costs are typically related to transmission interconnection and network upgrades. At the macro level, integration costs address not

only transmission requirements but flexible capacity requirements, operations and maintenance costs and other infrastructure needs.

What costs tend to not be included in the evaluation of renewable energy alternatives?

As indicated above, many of the cost items that support VERs at a macro level (See NREL Western Wind and Solar Integration Study cost items) are not included in integration cost studies. For example, Xcel did not quantify electricity trading inefficiencies introduced by wind uncertainty, or increased operating and maintenance costs associated with cycling units and the study does not address whether additional gas infrastructure requirements or gas operating changes are required to support additional gas-fired generation. Further, the PacifiCorp Integration study only addresses inter-hour system balancing and reserve costs, and does not address intra-hour resource costs at all. While it may be argued that some of these macro-costs will be needed regardless of the ultimate resource selection, it is still worthwhile to include these costs in the valuation process so that the true cost of adding each type of resource by penetration level is actually known.

Another cost that seems to be overlooked in integration studies is the opportunity cost of transmission. Each type of renewable resource has different transmission capacity requirements for the delivery of a specified amount of energy. For example, wind capacity factors are typically in the 35% range, Solar PV in the 25% range and geothermal in the 85% range. Therefore it takes about three times the transmission capacity to deliver the same amount of energy from a solar PV resource than from a geothermal resource. Unfortunately, transmission corridors and transmission capacity are scarce and new transmission capacity not only expensive to construct but difficult to permit. These problems are already intractable and solutions in the short-term do not appear likely.

While the cost of transmission to support renewable energy resources is typically included in the bid price of a resource, the opportunity cost of relinquishing that transmission for a specific resource is often not considered. For example, in Nevada, NV Energy supported the approval of its proposed ON Line transmission project by identifying the benefits attributed to the line. These benefits included: Dispatch Optionality, Load Diversity, Reduction in Planning Reserve Margin Requirements, Reduction in Contingency Reserve Obligation, Optimization of Gas Transportation Assets; Optimization of Regional Market Purchases, System Reliability Benefits, Protection Against Conventional Fuel Source Uncertainty, and Protection Against Carbon and Greenhouse Gas Uncertainty . However, for delivery of renewable Nevada-based resources to load centers in Nevada, NV Energy's RFP procurement process does not

assess the value of giving up these benefits in its consideration of the renewable resources that it is considering in its RFP process.

Other costs for studies and requirements for integrating variable energy resources are not considered. These costs include determining the operating practices that need to be changed to harmonize the electric and gas systems, integration costs, new tools to accommodate changes in operation, and forecasting activities. Geothermal resources are not the focus of the integration studies as these resources have integration costs that are consistent with traditional utility resources, do not need new operating practices or market changes, and have lower transmission capacity requirements than other renewable resources.

Gas System Costs Associated with High Penetration Levels of VERs

One of the ancillary services required more often with higher penetration levels of VERs in the portfolio will be load following and/or its inverse, resource following. The conventional expectation is that dispatchers will rely on natural gas-fired units to follow change in available renewable output. As detailed below, resource following using gas-fired generation will turn difficult and more costly for gas-fired units because the natural gas transmission and distribution infrastructure and market rules are not configured to support short-notice changes in gas requirements or highly variable gas requirements. These costs are not taken into account.

Mismatches between Scheduling and Use of Gas

Gas moves slowly. Gas deliveries are therefore scheduled many hours in advance. After the initial or "timely" schedule request is submitted at 9:30 a.m. the day before a gas day that starts at 7 a.m., additional procedures allow three chances to submit changes to that schedule. Those changes are intended to be "minor." Each "window" or adjustment opportunity is confirmed several hours later and more hours elapse before the adjustment is implemented. As shown in Table 2 below, even if a shipper tries to schedule gas the day prior in order to meet an expected ramp up, the gap in time from when the timely nomination is submitted to the next morning's ramp up in which that gas gets burned is approximately 40 hours (and more time expires to later ramps). In addition, the ramp times occur between the hours in which a changed nomination becomes effective, meaning that there will be an inevitable mismatch between when the gas is delivered and when it is consumed.

A shipper that does not schedule in the first window may lose the opportunity for the duration of the gas day and any reduction in capacity scheduled becomes available to interruptible shippers. That

shipper will also find much lower liquidity: fewer traders with gas available and at higher prices after the first nomination window.

Table 2: Gas Nomination and Scheduling Confirmation Windows

Cycle	Nomination Time*	Confirmation Time	Effective Time	Hours Gap from Nomination to Effective Time	Gap from Nom to 7am CCT 8,000 MW UP Ramp	Gap from Nom to 10am CCT 6,300 MW DOWN Ramp	Gap from Nom to 6pm CCT 13.500 MW UP Ramp
Timely	11:30 a.m. Day Prior	4:30 p.m. Day Prior	Start of Gas Day	22.5 hours	43.5 hours	46.5 hours	54.5 hours
Evening	6 p.m. Day Prior	10 p.m. Day Prior	Start of Gas Day	13 hours	36.5 hours	39.5 hours	47.5
Intraday 1	10 a.m. Day Of	2 p.m. Day Of	5 p.m. Day Of	7 hours	21 hours	24 hours	36 hours
Intraday 2	5 p.m. Day Of	9 p.m. Day Of	9 p.m. Day Of	4 hours	14 hours	17 hours	25 hours

* All Hours are expressed as Central Standard Time. Gas Day starts at 9 a.m. CST. Evening, Intraday 1 and Intraday 2 windows are intended to incorporate "small" changes to timely nomination quantities. Gas use is intended to occur in equal hourly quantities unless a variable-take service is available and purchased. Many pipelines and distributors do not offer variable-take services; and when they do, are priced much higher than ordinary ratable-take transportation.

Gas utility and pipeline tariff rules require users to burn the quantity of gas delivered (or pay a penalty). They also require delivery of the gas in even hourly quantities. When a shipper burns gas that they did not schedule, they are taking someone else's gas or gas the utility leaves in the lines in order to preserve operating pressures. If too many users fail to match the quantity burned with the quantity delivered, the pipeline or utility will impose higher penalties until compliance is achieved, or, it may need to call a system emergency in order to protect operating pressures. In the worst case, a system emergency could result in curtailment of gas deliveries to customers taking more gas than they scheduled, likely large

customers who are generators. (Loss of service to small customers creates danger of explosion and restoration of that service is very time consuming and staff intensive).

Owners of both gas-fired, base-load and peaking units often do not hold firm gas transportation rights. Peaking units (peakers), in particular, are understandably reluctant to commit to annual charges to reserve capacity 365/24/7 that they expected to use in only a handful of hours during the year. In addition, peakers and merchant generation are also often focused more on operating during high-energy-price hours that in California are likely to occur during the summer when interruptible gas transportation capacity is, today, almost always available. Paying reservation charges for reliable, firm transportation to operate under all conditions is outside the business model.

Ensuring Gas Generation has access to Firm Gas Supply will be Expensive

Even if generators do commit to firm transportation, state end-use priority rules and cost allocation policy make delivery of gas to electricity generators lower priority than deliveries to other customers. In addition, the gas transportation rates paid by generators are lower because the gas system build out assumes use of noncore customer load shedding on very cold days. The cost to expanding the gas system to put generators on the same priority level as residential customers would be extremely expensive, well over $1 billion, based on general knowledge of gas capacity construction costs, statements over the years by the gas utilities and their San Bruno-related system upgrade costs. Such costs would need to be passed onto electricity ratepayers.

Use of gas to support gas generation that ramps up or down to ensure electricity demand equals electricity supply at every instant fails to recognize that using natural gas generation for ramp up or ramp down service to support VERs is actually inconsistent with the provisions of most gas utility and pipeline tariffs. Those provisions require ratable hourly takes of gas from the gas system. Therefore, expectations of using gas-fired resources to backup renewable resources does not take into account costs that gas-fired generators will incur when they violate gas service tariffs.

Gas System Cost Upgrades will be another source of Integration Cost

Use of gas-fired resources to backup renewables works most of the time today because the ramp has been relatively predictable and VER penetration levels are low. In addition, California gas utilities have excess capacity and large amounts of underground gas storage. Larger, more frequent and sudden

ramps driven by increasing penetrations of variable generation resources will be harder to accommodate and likely result in more penalties for gas nomination changes or taking gas without notice. Some of the problems for the gas delivery system as more gas-fired ramps become steeper and more frequent are not insurmountable. New gas pipeline services could be developed (and would be more costly based on the rates for hourly services offered by some pipelines), more line pack capability could be added, tariff rules modified, generators could communicate burn changes to pipelines even outside the nomination windows, and pipelines could communicate with system operators about pending system upset conditions.

Expectations of using gas-fired resources to backup renewables do not take these costs into account. Gas-fired resources may take several hours to start and ramp up. PG&E noted in the RIM study that it filed in the 2010 Long-term Procurement Proceeding (R. 10-05-006), that more than 50% of the existing (gas-fired) fleet requires five or more hours to start. Higher levels of renewables penetration will require these resources to be placed in service hours before they may or may not be needed and with increased frequency. More starts means greater degradation to the equipment and higher maintenance costs. Current expectations of using gas-fired resources to backup renewables do not take this into account.

Taken together, these set of realities about using the gas system and gas-fired generation to provide ancillary services to support heavy VER portfolios will be significant, and the cost of the necessary gas system upgrades are not included in Integration Cost estimates produced to date.

Ancillary Services

What are ancillary services?

Ancillary services are services used by electric system operators to maintain reliability and support delivery of energy to electric system customers. Ancillary services include voltage control, regulation, load following or energy imbalance, spinning reserve, non-spinning reserve, replacement or supplemental reserve. New ancillary service products may also be required for higher penetration levels. As indicated below the CAISO is exploring a new ancillary service product that can be dispatched differently than other ancillary services and is targeted at supporting extreme ramping conditions as VERs come on or off the electric system. As far as time frames for ancillary services, regulation is required for time periods between 1-10 minutes and must be responsive in either direction; frequency responsive spinning reserve must be available in less than 10 minutes; load following energy imbalance

must be available in 10 minutes to an hour or more; and supplemental and replacement reserve, from 10 minutes to an hour or more. As noted in Appendix I, geothermal projects can provide a portion of their production providing these short time frame services.

What are the conventional sources of ancillary services?

Traditional sources for ancillary services are typically conventional intermediate or medium-duty thermal generators and peaking or light-duty resources. These resources are typically natural gas-fired combined cycle gas turbines or combustion turbines. Some of these resources can be placed on Automatic Grid Control to provide regulation or load following capabilities. Other types of resources used by the utility, namely base-load resources which operate continuously are typically not used to provide ancillary services and are inefficient for doing so – they operate at higher heat rate values and have increased variable operating costs due to increased cycling of these resources. New gas-fired resources that provide ancillary services cost between 800 and 1100 $/kw-mo. At the levels of renewables penetration experienced to date, gas-fired resources have provided the needed voltage control, regulation, load following or energy imbalance, spinning reserve, non-spinning reserve, replacement or supplemental reserve.

How does increasing the amount of renewable resources in the electric system affect the need for ancillary services?

Increasing levels of VERs, such as wind and solar, affect the magnitude and timing of ancillary services. For example, wind and solar resources have output profiles that require changes in the amounts and timing of certain ancillary services. Many studies have been conducted and are being conducted to determine the level of new flexible resources that are required to provide these services and support various penetration levels of variable energy renewable resources.

Additional flexibility is required to address output variations from VERs during ramp up and ramp down and light loading conditions. There are also electric system needs created by the addition of relatively high levels of renewable resources during light loading conditions. These needs include inertia, frequency response and ancillary services.

What ancillary services are required for renewable resources?

Renewable energy resources such as solar and wind have generation output profiles that require ramp rates both up and down that will stress existing flexible resources. For example, during period when electricity demand is relatively low, increased penetration of variable resources that contractually must

be taken by the utility is very likely to demand more flexible resources than are currently available. Other types of renewable resources, such as geothermal resources, don't have this problem and typically operate like base-load resources. They maintain a constant output and have high capacity factors.

The concern over increased flexibility requirements to support higher penetration levels of variable energy resources has caused planners to complete studies to determine integration costs including flexible resource needs for various penetration levels of variable energy resources. As indicated previously, providing flexible resources is costly. Processes such as the effort in R. 11-05-005 to revise the LCBF formula offer an opportunity to limit the amount of new flexible resources that are purchased by using flexible attributes of renewable resources. Flexible capabilities provided by base-load renewable resources should bring geothermal providers, and others, to the forefront of solving the problem caused by VERs.

Other characteristics of conventional resources which are not considered ancillary services but are important for supporting grid operations include inertia and frequency response. These characteristics are more important during light loading conditions. Most modern wind and solar PV resources are not coupled to the electric system and therefore can't contribute to under-frequency events or provide inertia to the electric system. Controls are becoming available for wind resources to provide some inertia and frequency response but these attributes are only available when the wind is blowing. Geothermal resources are synchronized to the electric system and can provide inertia to support under-frequency events when necessary and the output of these resources is not dependent upon whether the wind is blowing or the sun is shining. There does not appear to be a market or valuation information for these other characteristics. The CAISO ancillary services market is limited to ramp up, ramp down spinning and non-spinning ancillary services. Full valuation of geothermal requires some estimate of the value of these non-market ancillary services.

How are flexible resources viewed by the utility?

Load serving entities know that additional resources will be required to provide ancillary services or flexibility to support higher penetration levels of RE. They must decide where these resources will come from. Potential sources of flexibility include: existing conventional resources, construction of new generation resources, demand response resources, non-conventional resources such as renewable resources and resources from adjacent balancing areas. Intra-hour scheduling timeframes (i.e., 15 min

scheduling consistent with FERC Order 764) can reduce the amount of flexible capacity that is required, but more flexibility will still be needed, particularly in California. Some utilities privately indicate that very fast ramping resources, resources that can ramp in less than five minutes, are going to be extremely valuable because so few generation facilities can respond this quickly.

Some utilities have a disincentive to use renewable energy resources as flexible resources because doing so deprives the utility of the opportunity to build peaking generation that it can then place in rate base. Other utilities don't seek to invest in peaking generation, but have a strong desire to invest in distribution and transmission system assets as a way to build rate base. These latter utilities see renewable energy with heavy distribution upgrade needs (solar PV) and heavy transmission system expansion needs (remote wind and remote large scale solar) as providing greater revenue opportunities than technologies such as geothermal or biomass which do not require as much utility investment. However, recent pressure from regulators to minimize flexible capacity cost by using all-sources of flexibility including demand response and renewable energy resources and to minimize the cost of complying with the RPS open the door for geothermal developers to demonstrate their cost conserving capabilities.

Renewable developers have not traditionally planned to offer flexible attributes from their resources and did not expect to get paid for them. Exchanging energy for capacity conflicted with the goal of meeting energy-based RPS targets and the utilities' goal to earn revenue from infrastructure and peaking capacity investments. This also didn't provide any added value for developers because these attributes were not compensated by utilities nor valued by regulators. Renewable developers with resources that have flexibility and ancillary service value are now looking at this issue differently and seeking to amend the regulatory and procurement process to ensure all of the attributes and all of the costs are accounted for.

Flexible Characteristics of Renewable Resources

Geothermal resources can provide ancillary services but are typically not considered for this purpose as they have been primarily used for their base-load benefit. Nevertheless, geothermal resources can provide regulation, load following or energy imbalance, spinning reserve, non-spinning reserve, replacement or supplemental reserve. In fact, 8 MW of geothermal capacity at the Puna Geothermal Venture facility in Hawaii is currently used only to provide ancillary services for grid support. This unit is currently on Automatic Grid Control and is used as a regulating unit. It provides identical services as oil-

fired resources on the Hawaiian island. Furthermore, geothermal resources are coupled with the electric system and can provide system inertia and frequency response during light loading conditions. More details on the capabilities of geothermal facilities are reported in Appendix I.

What are the flexible attributes of wind and solar renewable resources?

Other types of renewable resources can provide ancillary services to support VERs. However, with the exception of solar thermal with storage, most types of renewable resources have limited ability to support VERs. In fact, the need for additional flexibility required to support VERs is caused by the addition of wind and solar PV to the electric system. These are the resources that are ramping up and down and the cause for investigating market changes and additional resource needs. These resources can't provide ancillary services if the wind is not blowing and the sun is not shining. In addition, these resources are synchronized to the grid and for most standard installations provide no inertia during light loading or low frequency events in the electric system.

How many new conventional resources that provide ancillary services will be needed?

The amount of new conventional resources needed to provide ancillary services will depend on the economics of using existing resources to offer ancillary services that have not typically done so, the quantity of VERs in the portfolio of renewable energy RPS compliance portfolios, and the market changes that are instituted to expand the quantity of ancillary services available from existing regional resources.

- Economics of Using Existing Generation: It may be cheaper to use existing resources not currently used for this purpose. One company, TSS, is marketing retrofit technology that can adapt existing resources to be ancillary services capable.

- Selection of Resource Portfolios: Some resources have less ancillary services needs than others. Geothermal, biomass and solar thermal with storage require less flexibility and ancillary services support that wind, solar PV or solar thermal without storage.

- Market changes affect the Quantity of Regional Resources Available for ancillary services: Balancing area consolidation or an Energy Imbalance Market which is being considered in the west would use resources across balancing areas, potentially obviating the need to add new resources to supply ancillary services.

What ancillary services can be provided by geothermal resources and which will likely be needed by load serving entities?

Geothermal resources can provide voltage control, regulation, load following or Energy Imbalance, spinning reserve, non-spinning reserve, replacement or supplemental reserve. However, since a geothermal resource's most valuable product is energy and ancillary services generally require making capacity available, owners of geothermal resources will have to determine when it makes sense to offer a resource for ancillary service instead of energy. The most likely ancillary service that is needed by Load Serving Entities (LSE) in which payment for the ancillary services could be in excess of energy payments is through regulation. Other ancillary services may be needed by the utility but geothermal developers would determine whether forgoing energy payments is worth the revenue received by offering these other services. For more information on the operational capabilities of geothermal resources see Appendix I.

The CAISO is also considering a proposal to develop a flexible ramping product market, which is not classified as an ancillary service. The ramping product would be used to support high ramping conditions needed for high penetration levels of VERs. These products would be dispatched in real time using an economic bidding process to select the products. Geothermal project owners have to assess whether it makes sense to offer bids to provide ramping products.

Valuing Ancillary Services Attributes of Geothermal Resources

The CAISO publishes prices for four key ancillary services in its monthly Market Performance Reports. The compilation of hourly prices by day and month to the average annual prices presented below (both in graphical and tabular form) shows that ancillary services prices have been relatively volatile, although are somewhat less unpredictable after implementation of the MRTU. It also shows that Regulation Up tends to be the most valuable, followed by Regulation Down and Spin, while Non-Spin consistently shows the lowest value.

Figure A1: CAISO Ancillary Services Prices by Month, 2006 to 2012

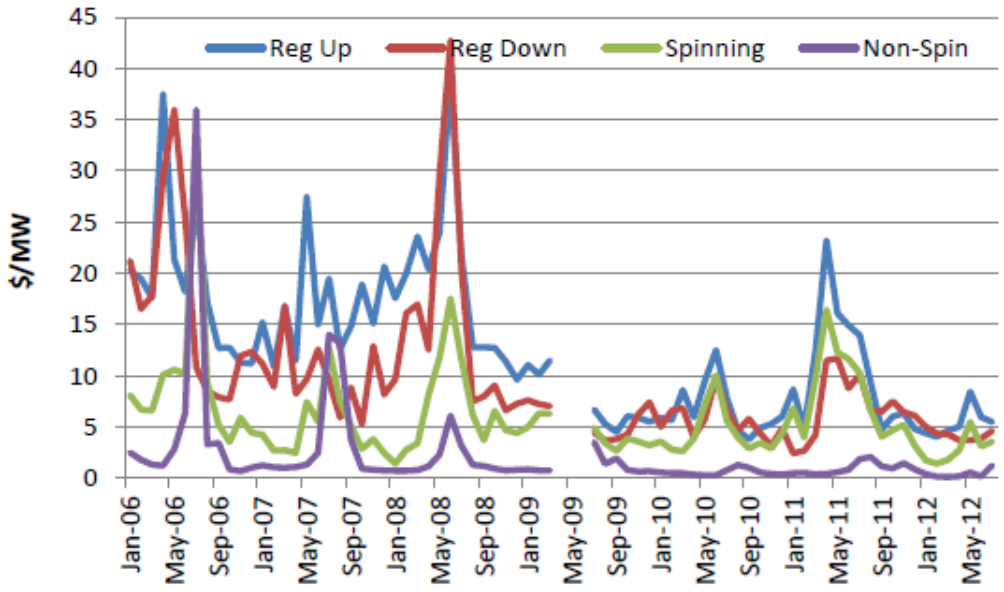

*Denotes partial year.

Table A3: CAISO Ancillary Service Annual Average Prices

	Average Annual Ancillary Service Prices ($/MW)			
	Reg Up	Reg Down	Spin	Non-Spin
2006	18.86	17.12	9.51	5.13
2007	16.55	9.84	4.98	3.49
2008	18.80	15.54	6.87	1.68
2009*	7.42	5.76	4.38	1.28
2010	6.73	5.63	4.44	0.60
2011	10.46	7.06	7.92	0.98
2012*	5.44	4.24	2.85	0.42

The CAISO's latest Market Performance Metric Catalog breaks ancillary services prices out in more detail to show the day ahead and real time average prices for the four ancillary services it buys. As with the historical monthly average ancillary services prices, Average Real-Time prices for each day in July and August 2012 shown in Figure A3 below for regulation up and down are the most highly valued ancillary service products. In addition, ancillary services

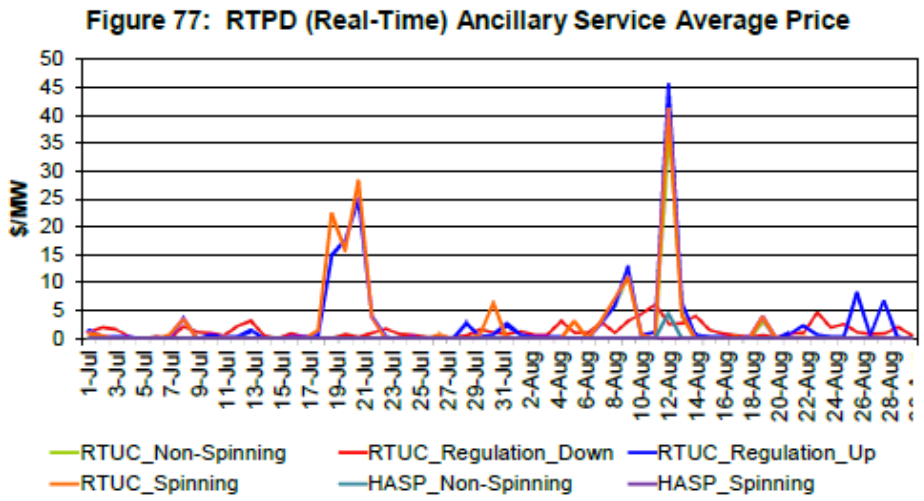

Figure A3: Real Time Ancillary Services Prices at the CAISO July and August 2012

prices during July and August 2012 were below $10/ MW most of the time, with occasional spikes as

high as $46/ MW.

Other independent system operators like PJM and ERCOT have markets for ancillary services and ancillary services values can be obtained, although each tends to define the services somewhat differently in terms of the time requirement, for example for ramp up or ramp down. In addition, most open access transmission tariffs include values for the various ancillary services that are offered by the balancing authority.

Current ancillary service values should be put in perspective. Figure 3 below shows that in economically robust times, ancillary service values were substantially higher. Furthermore, renewable energy penetration levels are relatively low today compared to future forecasts when there will be higher levels of renewable energy added to the electric system. It is likely that future ancillary services prices will be higher and perhaps quite volatile, but Aspen interviews indicate that no forecasting service produces insights for future ancillary service prices more than one or two years out because so many uncertainties impinge on price determination under dramatically changing grid conditions. However, one should expect that the range of prices seen historically represents a lower limit on the range of prices than in the future given the dramatic changes in system operations that are coming. In addition, the fact that these prices are so uncertain indicates that holding an option contract for future ancillary services has value. When history repeats itself and prices spike, the option value of flexibility will be high. Since geothermal projects can be operated flexibly and can offer a range of ancillary services, a geothermal project contract can be viewed as a contract with option value if it is negotiated to have operational flexibility. It should be noted that ancillary services will continue to have high values during certain days and certain time periods and relatively low prices during most periods.

Obtaining payment for ancillary services where there are not organized markets will likely be more difficult. For example, in Nevada there currently is no organized market and it will likely take some work to convince regulators that the incumbent utility should value and pay for ancillary services needed to support higher penetration levels of VERs in order to keep the cost of electric service for electricity consumers as low as possible. Getting paid for ancillary services in other venues will have to be addressed on a case-by-case basis.

How does a geothermal developer ensure that the ancillary service attributes of its generation resource are valued correctly and that they realize its value?

In an organized market, a geothermal developer will have to determine its options for selling ancillary services. A developer appears to have a couple of options: It can turn the ancillary service attributes of its resources over to the LSE assuming the LSE is willing to pay for them; and, it can also retain the ancillary service attributes and attempt to sell them in the market. This assumes regulations are in place to ensure that ancillary service attributes are fairly valued and that the PPAs can include terms that allow the ancillary service opportunities to be realized by the geothermal developer. It should be noted that the CPUC is currently evaluating the Least Cost Best Formula used for renewable energy procurement by the LSEs and considering whether to add ancillary service value and integration costs into this formula. There may also be other options.

As indicated above, for situations where there is not an organized market, local regulations will need to be modified to allow payment to geothermal developers for their ancillary services.

Conclusion

Ancillary Service Attributes:

Geothermal resources can provide ancillary services to support increasing penetration levels of renewable energy resources. A resource at the Puna Geothermal Venture facility in Hawaii is currently on AGC and providing a range of ancillary services on par with an oil-fired resource. Ancillary services that can be provided from geothermal resources include: Regulation, ramp up, ramp down energy imbalance, and voltage support. Also, since geothermal resources are synchronized to the electric grid they can provide system inertia and frequency response. Geothermal resources can be used to avoid the need for acquiring new expensive flexible resources to support higher penetration levels of renewable resources. In short, it is possible to use renewables to support VERs and this value should be incorporated into resource solicitation evaluations so that geothermal resources are appropriately valued in comparison to other resources.

Avoided Integration Costs:

Renewable energy resource alternatives can only be fairly compared if all costs for integrating each alternative are considered. Failure to include all integration costs blatantly discriminates against resources like geothermal resources that do not require integration support. Integration cost studies

capture part of the cost of integrating VERs but unfortunately even these costs are not accounted for in some procurement processes. In addition, many additional costs are neglected in the integration cost studies so even if the integration costs are included in the development of LCOE for resource alternatives, some costs that geothermal generation avoid are not included in the calculation. These costs can include: infrastructure and support for forecasting required by intermittent resources, expenses for addition gas transportation and supply arrangements to support flexible resources, increased wear and tear on existing generation and avoided transmission costs. The bottom line is the full integration cost should be considered when valuing various types of renewable energy resources for the purpose of selecting a resource portfolio that is truly Least Cost and Best Fit from the ratepayer perspective.

Avoided Gas System Costs:

Portfolios with high proportions of VERs will likely require substantial investments in new flexible generation even if existing renewables with flexibility capabilities like geothermal are used to help fill the ancillary services gap. Relying on substantial amounts of gas generation that will have uneven and sometimes unpredictable demand will require investments in the gas system that can ensure that the supply is available when and where it is needed. As explained above, the gas infrastructure and nomination process in place today needs to be improved to accommodate the demands created by VERs. To the extent more new geothermal and renewable resources with flexibility attributes are selected over VERs, the need for the gas investments will be diminished, deferred and perhaps even obviated. Thus, the avoided gas system costs associated with renewables with flexibility characteristics should be accounted for as RE resources are procured to fill RE open positions.

Avoided Transmission System Costs:

It takes about three times the transmission capacity to deliver the same amount of energy from a solar PV resource than from a geothermal resource. Unfortunately transmission corridors and transmission capacity are scarce and new transmission capacity is expensive to construct. In the future, the cost to develop transmission projects will increase and it will become much more difficult to get permits to construct transmission lines. Thus using existing capacity as fully as possible defers the need for expensive new transmission investment and resources with high capacity factors such as geothermal energy use transmission capacity more efficiently avoiding some costs of new transmission relative to VER-heavy portfolios.