PG&E's
2009 Electric Transmission Grid Expansion Plan

(Formerly the 2008 Electric Transmission Grid Expansion Plan)

Elk Hills/
Occidental

Pacific Gas and Electric Company®

March 5, 2009

Occidental of Elk Hills 230 kV Interconnection

TARGETED IN-SERVICE DATE

June 2010

PURPOSE AND BENEFIT

Reliability – Tariff and Compliance

PROJECT CLASSIFICATION

This is a new project.

DESCRIPTION AND SCOPE OF PROPOSED PROJECT

The project scope to interconnect the new Occidental of Elk Hills' (Oxy) substation involves the following work:

1. Removal of existing interconnection service point off of the Midway-Taft 115 kV Line (including metering)
2. Install new meter at new customer owned substation

This project is expected to cost $400,000. This project will be financed by the customer.

BACKGROUND

Occidental of Elk Hills, Inc. (Oxy) located in Tupman is a transmission level customer served off of the Midway-Taft 115 kV Line. Oxy is requesting to transition its service point from 115 kV to its new 230/115 kV substation. In addition, Oxy is looking to increase its demand to 150 MW in 2010 and increase its level of service reliability. Oxy will build, construct, own, and operate its new 230/115 kV substation in close proximity to the Elk Hills Power Plant (Elk Hills Cogen Substation) currently owned and operated by Elk Hills Power. Oxy additionally plans to construct, own, and operate a new transmission line that will connect its new 230/115 kV substation to the Elk Hills Power 230 kV switchyard. It is Oxy's plan to obtain an undivided interest in the existing nine-mile 230 kV double circuit transmission line between the Utility's Midway substation and the Elk Hills Power Plant. Oxy will be served through these lines, the Midway-Elk Hills No. 1 and 2 230 kV lines.

BASE CASE AND STUDY ASSUMPTIONS

PG&E used base cases approved by the 2008 expansion plan study group and the CAISO. The Midway-Elk Hills No. 1 and 2 lines were assumed to consist of 1590 Aluminum Conductor Steel Reinforced (ACSR).

STUDY CRITERIA

CAISO Grid Planning Criteria

ALTERNATIVES CONSIDERED

Alternative 1: Status Quo

The status quo alternative is not recommended since PG&E has an obligation to serve within its service territory.

Alternative 2: Continue to serve Oxy from its existing 115 kV service point

To provide an increased level of service reliability would require looping Oxy directly to Midway Substation. This would require upgrading the 115 kV bus at Midway to Breaker and a Half (BAAH) and building 2-8.25 miles transmission lines. This alternative was not Oxy's preferred option.

PROJECT SCHEDULE

- Environmental and Permitting Processes – TBD
- Design – TBD
- Major Equipment – TBD
- Construction – TBD
- Operation Date – June 2010

KEY ISSUES

- Land-Use Restrictions – None
- Environmental Concerns – None
- Special Metering or Protection – Install one set of 230 kV meters with associated CT's and PT's at Oxy's substation.
- Common Mode Exposure Items – None
- Interaction with other Projects or Studies – None

GE PSLF MODELING INFORMATION

```
#Occidental of Elk Hills 230kV Interconnection
#EDRO June 2010

# This change file removes Navy 35R (Oxy) from the existing 115kV service point
# and moves it to the new 230kV Oxy sub.
# This change file also increases the load per the customer to 150 MW at.95 PF

NEWBUSD  34817, NAME=OXY_230, BASKV=230, BUSTYPE=1, VSCHED=1, AREA=15, ZONE=345, OWN=360
NEWSECDD  30948, 34817, CKT=1, SEC=1, RPU=.00033887, XPU=.00240405, BPU=.00039574, +
     MVA1=164, MVA2=194, MVA3=256, MVA4=274, STATUS=1, AREA=15, ZONE=345, OWN=360
MOVE_BRANCH  35064, 34816,  CKT=1,  NEW_TOBUS=34817
MOVE_BRANCH  35064, 34816,  CKT=2,  NEW_TOBUS=34817
MOVE_LOAD  OLD_LOAD_BUS=34816 LOADID=SG TO_LOAD_BUS=34817 NEWLOADID=SG
OLD_TRAN  FBUS=35064, TOBUS=34817, CKT=1, VNOMF=9.11, VNOMT=230
OLD_TRAN  FBUS=35064, TOBUS=34817, CKT=2, VNOMF=9.11, VNOMT=230

OLDSECDD  FBUS=34774, TOBUS=34816, CKT=1, SEC=1, STATUS=-1
OLDSECDD  FBUS=34776, TOBUS=34816, CKT=1, SEC=1, STATUS=-1
NEWSECDD  34774, 34776, CKT=1, SEC=1, RPU=.02124063, XPU=.10291128, BPU=.01561158,+
     MVA1=126, MVA2=148, MVA3=194, MVA4=207, STATUS=1, AREA=15, ZONE=315, OWN=390
OLDLOAD  BUS=34817, LOADID=SG, PLOAD=150, PF=.95
EXTRACT  34816
```

MISCELLANEOUS DATA

- Occidental of Elk Hills, Inc. will construct, own, and finance the project
- Occidental of Elk Hills, Inc. will be the planned operator of the project

ATTACHMENTS

4. Scope Diagrams
5. Power Flow Summary
6. Pre and Post Project Power Flow Plots

Attachment 1: Scope Diagrams

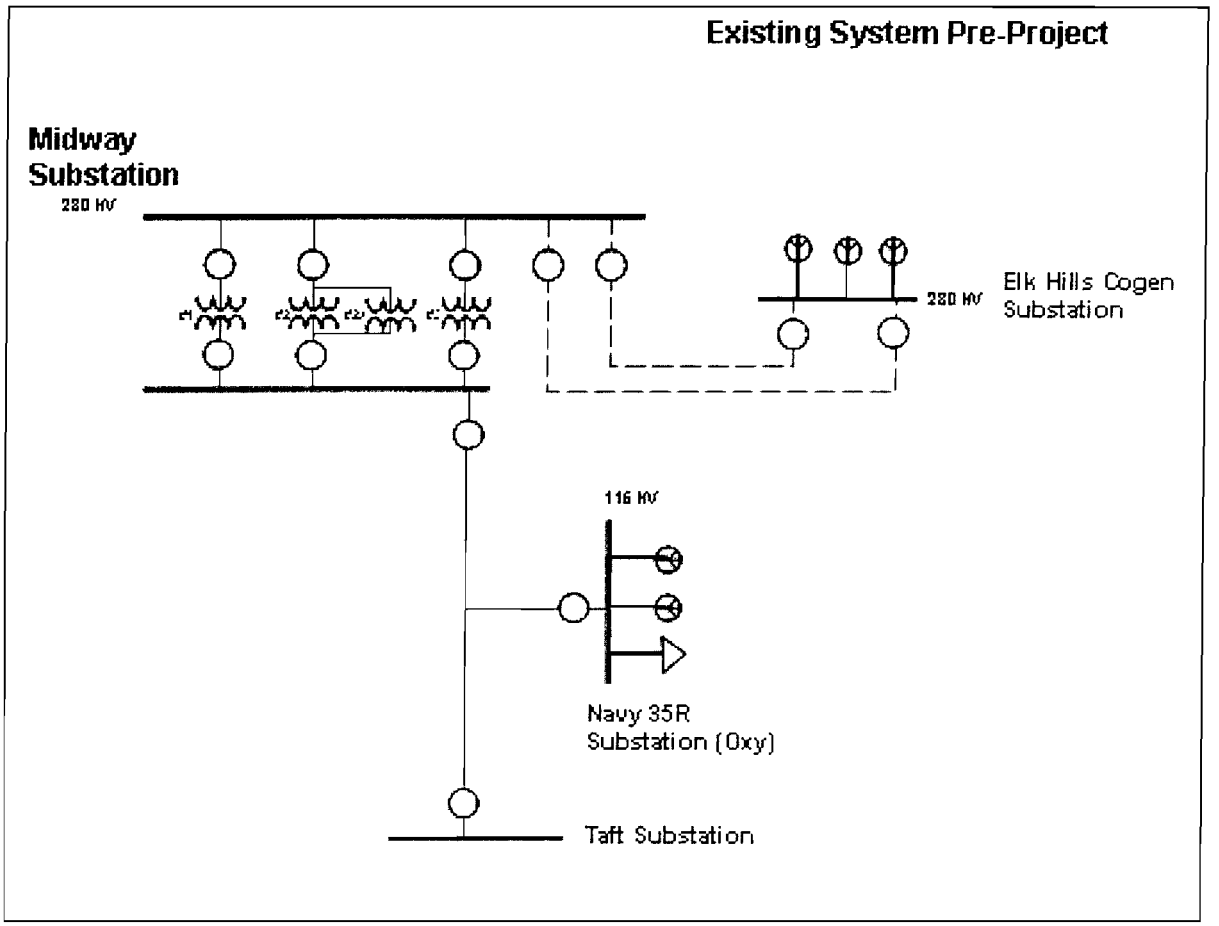

Figure 4-92: Existing Scope Diagram

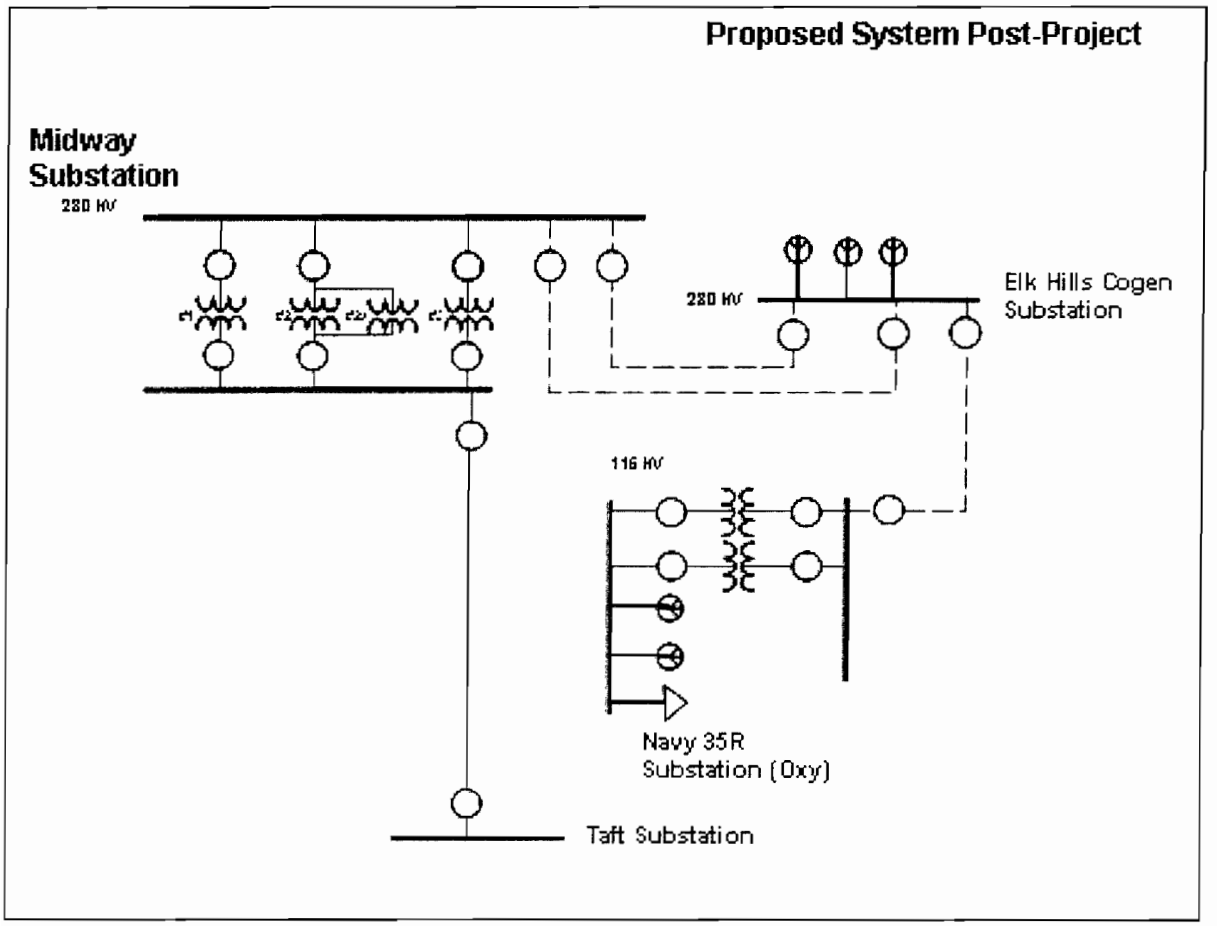

Figure 4-93: Proposed Scope Diagram

Attachment 2: Power Flow Summary

Table 4-29: Power Flow Summary

			Pre Project					Post Project	
#	Facility	Facility Rating	2009	2010	2011	2012	2013	2013	Contingency
1	Midway-Taft 115 kV Line	SE Rating 148 MVA	--	88%	88%	91%	91%	17%	Taft-Fellows 115 kV Line with University Cogen offline when Navy 35 R (OXY) gen offline (L-1/G-1)
2	Midway-Elk Hills No. 1 and 2 230 kV Lines	SE Rating 148 MVA	--	--	--	--	--	61%	Oxy-Elk Hills 230 kV Line
3	Midway-Elk Hills No. 1 and 2 230 kV Lines	SE Rating 148 MVA	--	0%	0%	0%	0%	0%	Either Midway-Elk Hills No. 1 or 2 230 kV Lines

Attachment 3: Pre and Post Project Power Flow Plots

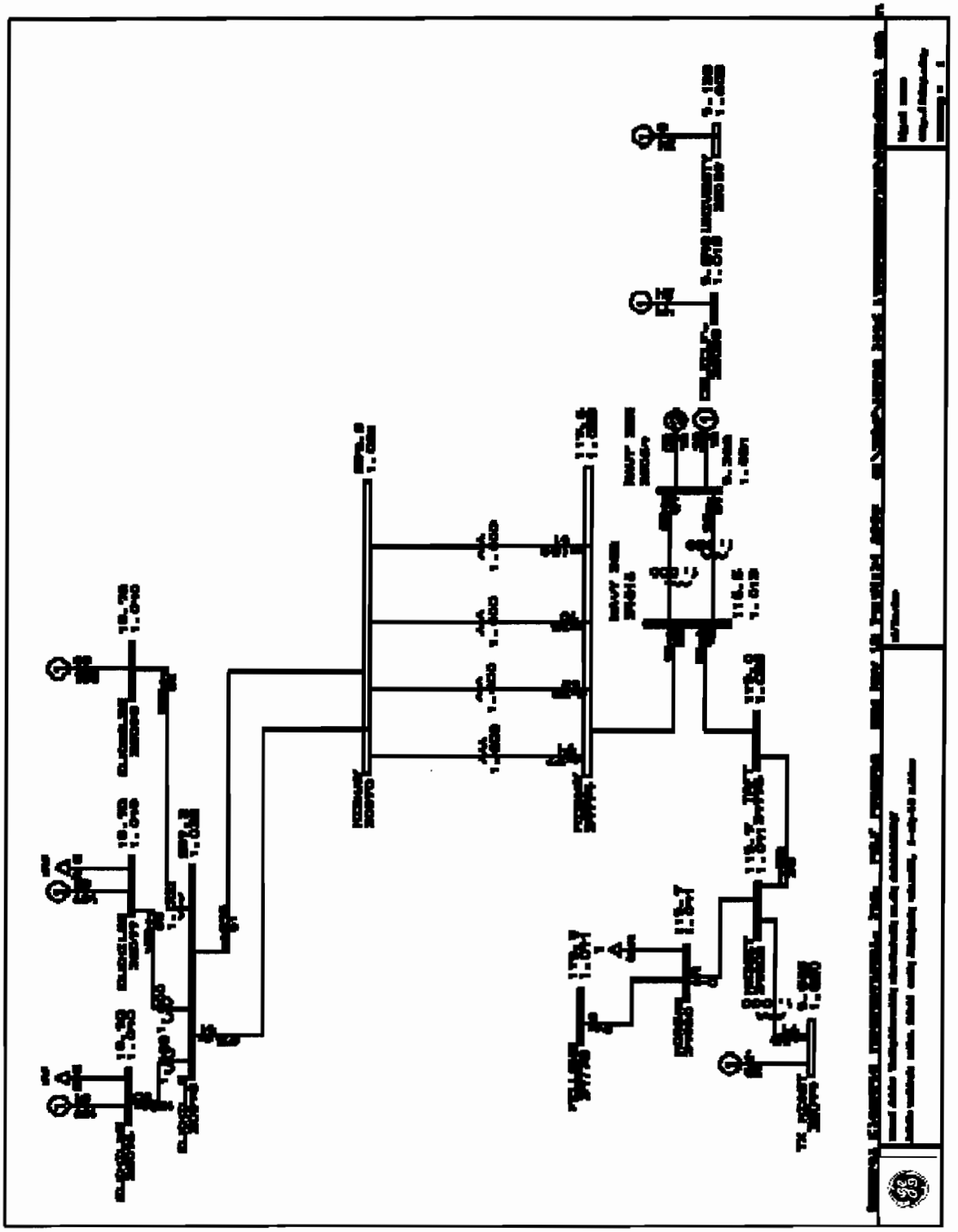

Figure 4-94: Pre-Project Power Flow Plot (Normal)

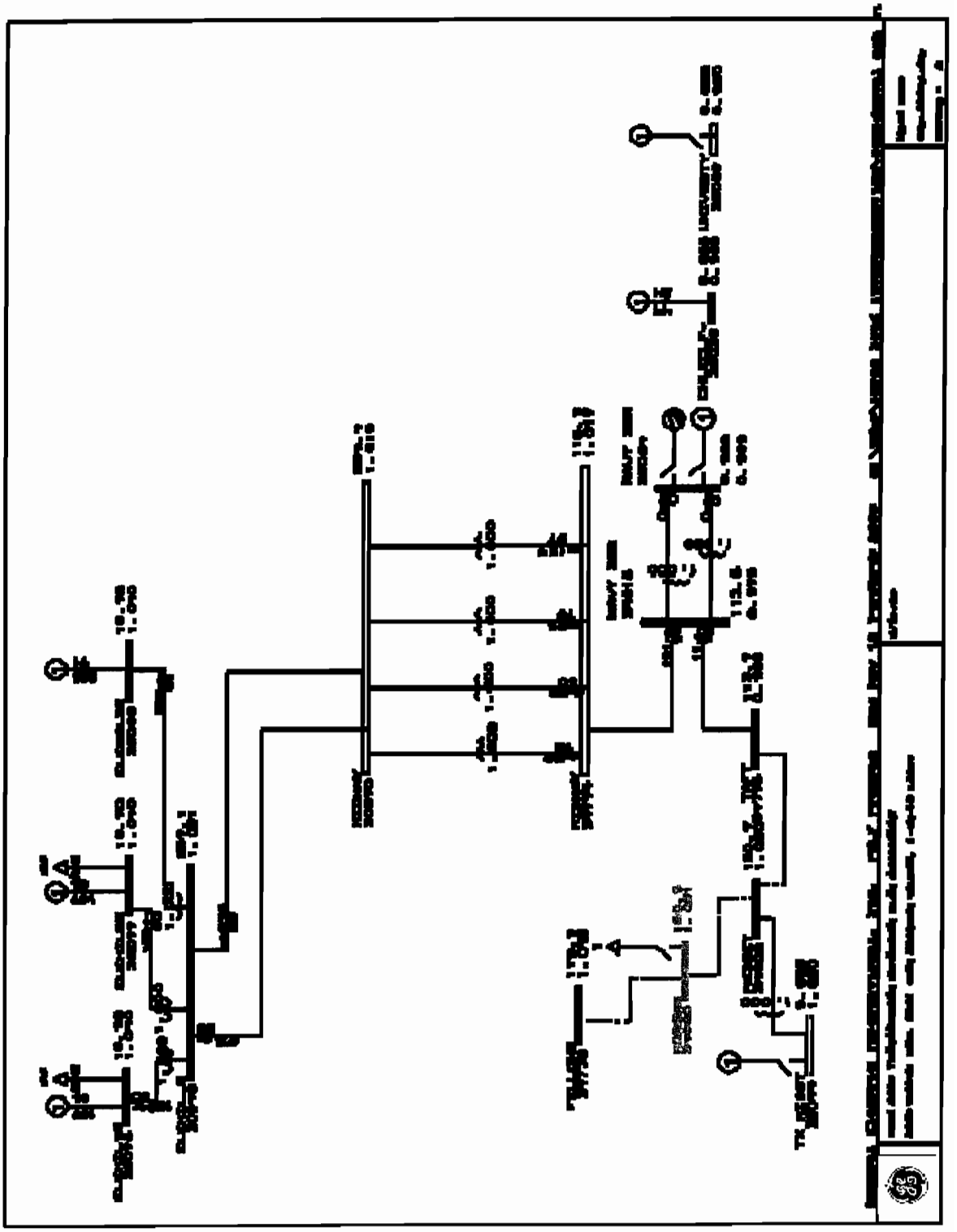

Figure 4-95: Pre-Project Power Flow Plot (Contingency 1: Taft-Fellows 115 kV with Navy 35R (Oxy) Gen and University Cogen offline)

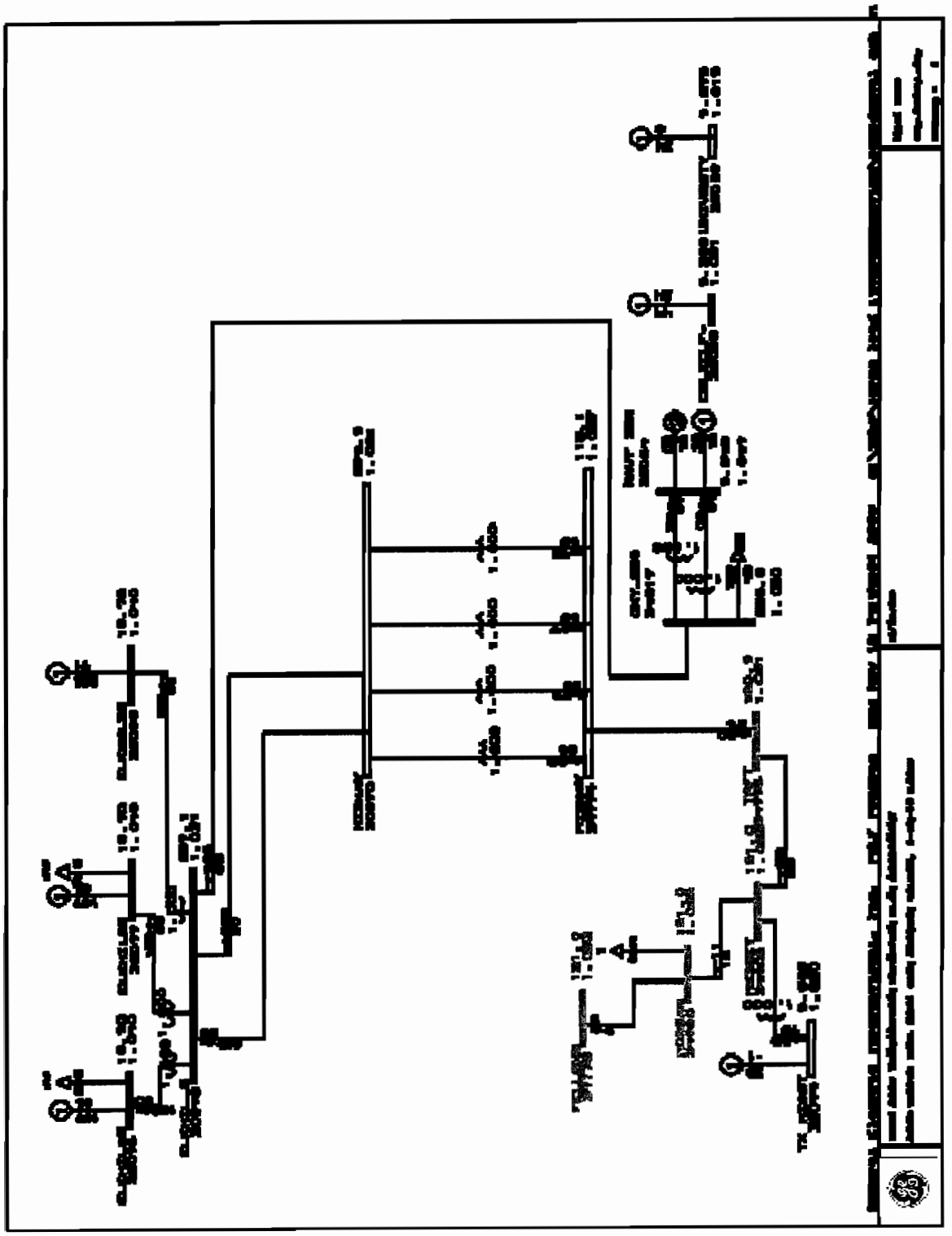

Figure 4-96: Post-Project Power Flow Plot (Normal)

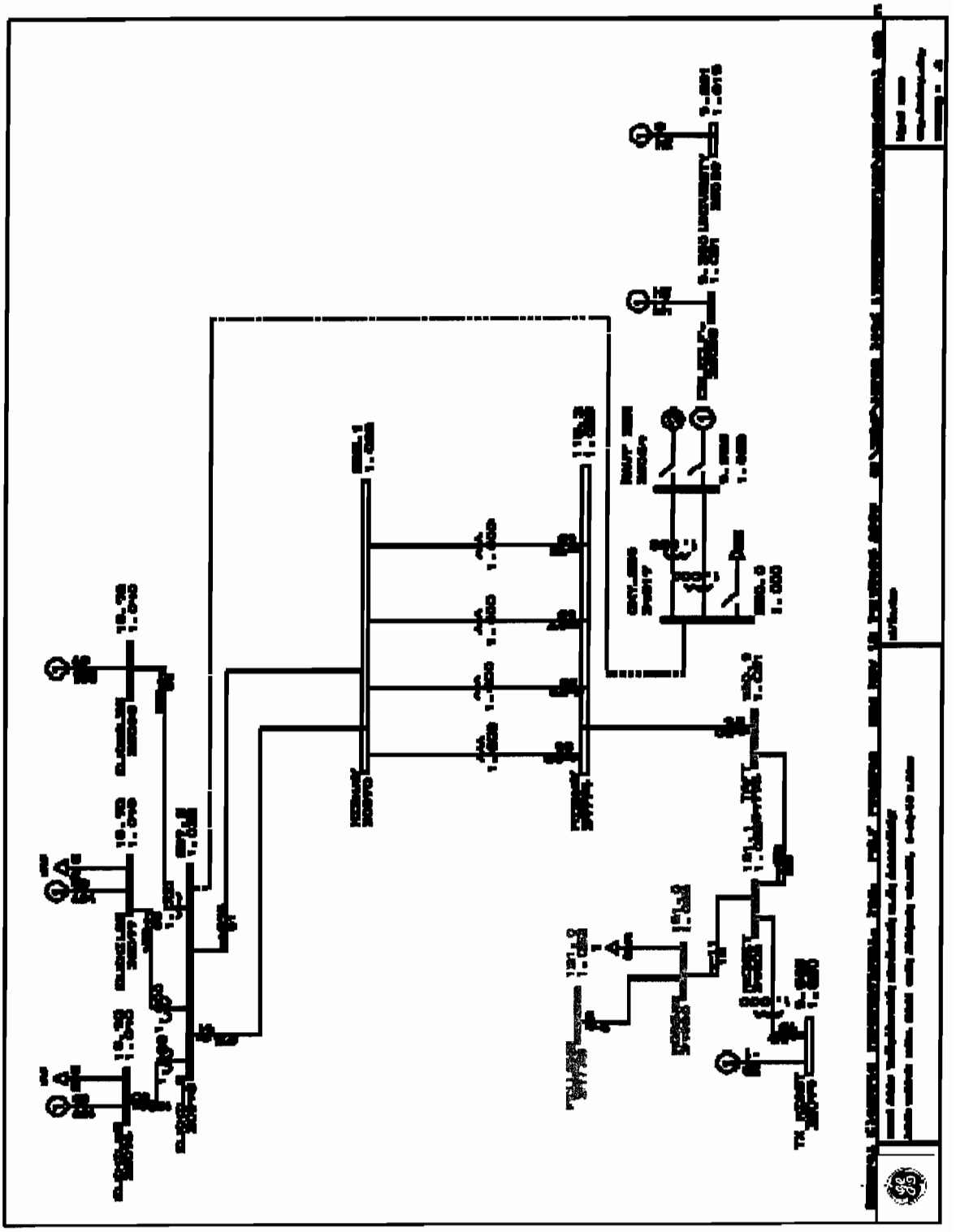

Figure 4-97: Post-Project Power Flow Plot (Contingency 2: Oxy-Elk Hills 230 kV)

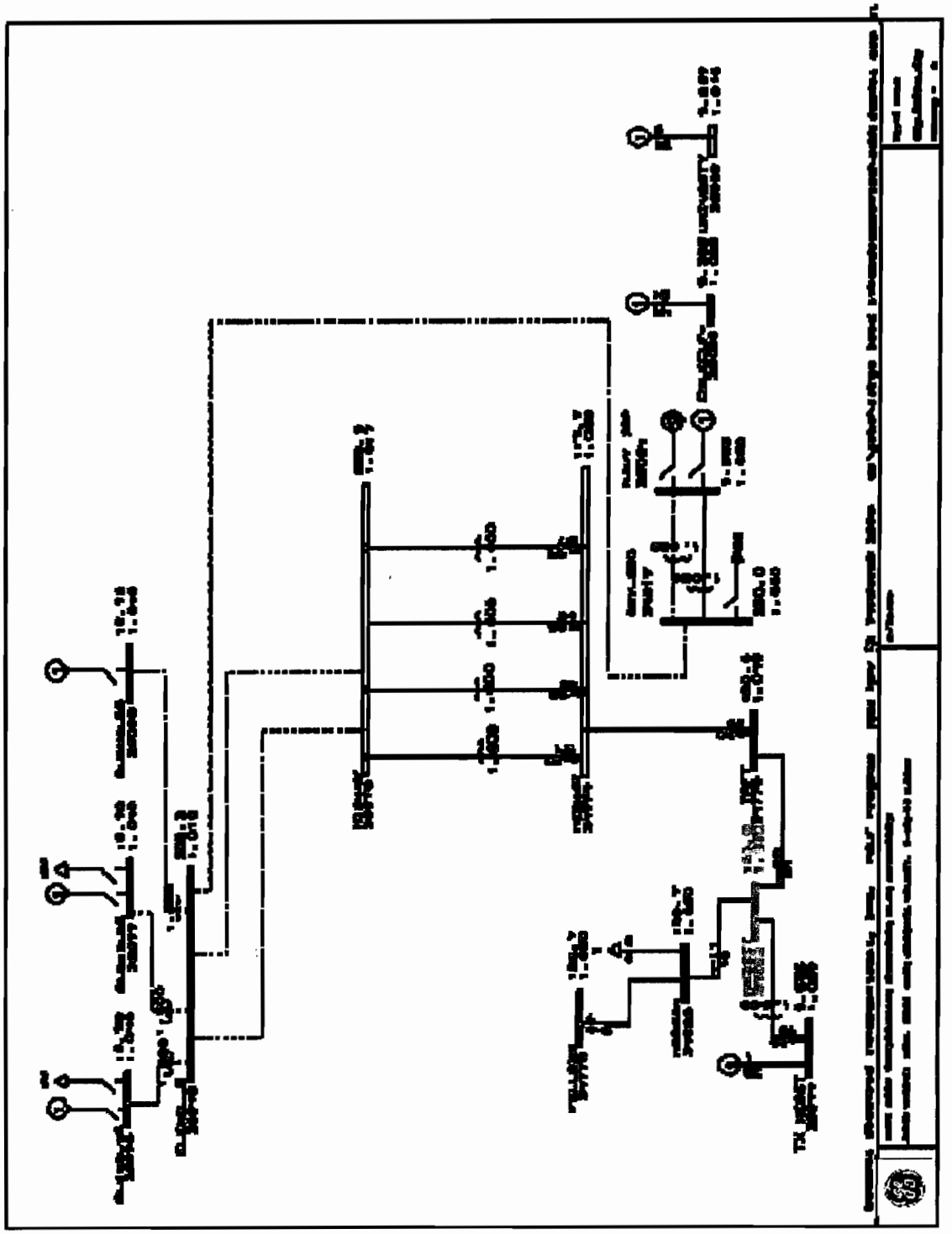

Figure 4-98: Post-Project Power Flow Plot (Contingency 4: Both Midway-Elk Hills No. 1 and 2 230 kV lines)

Note: The current transfer trip at Elk Hills takes both Midway-Elk hills No. 1 and 2 out of service for an outage of either line.